DOORS & SPECIALTIES CO.

COMMERCIAL DOORS • FRAMES • HARDWARE

1951 South Parco Ave., Unit A
Ontario, California 91761

Phone: 1-877-930-1192 Local: 909-930-1192
FAX: 909-923-2372

bids@doorsandspecialties.com

accounting@doorsandspecialties.com

info@doorsandspecialties.com

sales@doorsandspecialties.com

DOORS & SPECIALTIES CO.
COMMERCIAL DOORS • FRAMES • HARDWARE

Access Control Products
Alarm Lock 1-3
Camden 1-6
Command Access 1-5
Kaba Access Control 1-5
Schlage CO Locks 39-41
Yale inTouch 2-4

Access Panels
Babcock Davis 1

Astragals
National Guard 7
Pemko 6-8
Residential 1

Bath Accessories
Bobrick 1-8
Head West 1-2
Moen/CSI/Donner 1-4
Zaca (Med Cabinets) 1-2

Bolts Manual/ Automatic
Deltana 1-3
Doormerica 32-33, 38
Hager 15
Ives 2,5,13
Rockwood 8, 9, 12
Taymor 3

Catch Ball/Roller
Deltana 11-12
Ives 6-7,21
Rockwood 10, 13
Taymor 1

Closers
Calibre 1-2
Doormerica 2-6
Falcon 25-26
Jackson 1-2
LCN 1-5
Norton 1-5
Rixson 1-2

Closet Hardware
Taymor 2

Continuous Hinges
Hager/ Roton 8-10
Pemko 12

Coordinators
Doormerica 1
Rockwood 9, 11

Cylinders
Calibre 5
Falcon 10
Ilco 4-6
Schlage 34-35
Weslock 8

Deadbolts
Doormerica 22
Falcon 2
Schlage 1,9-11,13,15-16
Weslock 1,3,5

Door Bottoms
National Guard 4-6
Pemko 3, 5

Door Guards
Doormerica 31
Pro-Lok 16

Door Viewers
Deltana 16
Doormerica 31
Hager 12
Ives 8
Pro-Lok 16
Rockwood 10

Double Acting Spring Hinge
Bommer 1
Deltana 18

Electric Accessories/ Supplies
Adams Rite 4
Command Access 2-4
Falcon 26
Schlage 42
Von Duprin 18-20

Electric Hinges
Command Access 2
Rixson 3

Electric Locks
Command Access 1
Schlage 13-14, 39-41

Electric Strikes
Adams Rite 1-2
HES 1-4
Trine 1-6
Von Duprin 20

Exit Alarms/ Controls
Alarm Lock 2-3
Detex 1
Doormerica 9,14
Falcon 19
Von Duprin 4-5,18

Exit Devices/Trim
Adams Rite 3-4
Command Access 2
Doormerica 7-14
Falcon 11-22
Jackson 4
Schlage 41
Von Duprin 1-17
Yale 9-10

Filler Plates
Don Jo 4-5
Pro-Lok 15

Flush Pulls
Deltana 13-14
Doormerica 37
Ives 4-5
Taymor 5

Gasketing / Seals
National Guard 7-8
Pemko 9-11

Gate Boxes
Keedex 2

Hand Rail Brackets
Doormerica 37
Hager 16
Ives 2
Taymor 5

Hasps
Abus 5
Pro-Lok 16

Hinges
Bommer 1-3
Deltana 20-21
Doormerica 26-30
Hager 2-11
Ives 10-12
SOSS 1

Interconnected Locks
Doormerica 21
Schlage 3, 32-33
Weslock 7
Yale 1

Key Blanks
Abus 6
Ilco-Automotive 22-29
Ilco-Domestic 9-21
Ilco-Look Alike 7-8
Schlage 36

Key Machines
Ilco 1-3
Pro-Lok 4

Keying Product
Lab 1-6
Lucky Line(Tags and Rings) 1-10
Schlage 37
Weslock 9

Key Safe
Supra 1

Kick Plates
Don Jo 10
Doormerica 33
Ives 9

Latches
Doormerica 20
Falcon 9
Schlage 8, 19, 26
Weslock 8

Lock Guard Plates/ Latch Plates
Don Jo 6-8
Ives 20
Keedex 1
Pro-Lok 12-13

Locksets
Calibre (Storefront) 4
Doormerica 15-19
ML Series 23-25
Falcon 1, 3-8
Fusion 1-5
Schlage Residential
Dexter 1-5
B250,B500 9,15
BE/FE 13-14
Nexia 14
F Series 21-28
Schlage Commercial
A,AL 6-8
B60,B600 ..... 10-12, 16
ND Series 17-19
L Series 29-30
S Series 31
CO Series 39-41
CS Series 32
Weslock 1-9
Yale 3-8

Locksmith Tools and Accessories
Keedex 1-3
Pro-Lok 1-17

Low Energy Operators
Falcon 24
Norton 2

Magnetic Door Holders
Doormerica 1
LCN 6
Rixson 8

Mail Slots
Deltana 15

Mullions
Falcon 23
Von Duprin 18

Overhead Holders
Glynn Johnson 1-4

Padlocks
Abus 1-4
Schlage 38

Patio Locks
Pro-Lok 17-18

Pivots
Bommer 2-3
Calibre 6-7
Jackson 5-7
Rixson 3-7

Plates Push/Pull/Remodel
Don Jo 2, 5
Doormeria 36
Hager 16
Ives 1
Rockwood 1-3

Pocket Door Locks
Deltana 16-17
Ives 8
Residential (Kwikset) 3
Taymor 5

Power Supplies
Alarm Lock 3
Adams Rite 2
Command Access 5
Trine 6
Von Duprin 20

Residential Section
Astragal 1
Sills 2
Seals 3
Pocket Locks 3

Screws For Hinges
Hager 1

Signs
Don Jo 9
Doormerica 39

Silencers
Rockwood 10

Sill Nosing
Pemko 6

Stops and Holders
Deltana 4-10
Don-Jo 1
Doormerica ..... 34-35 ,37
Hager 12-14, 16
Ives 3-4, 14-19
Perfect Products 1
Rockwood 4-7
Taymor 4

Storefront Hardware
Adams Rite 5-14
Calibre 1-8
Jackson 1-8
Rixson 1-8
Rockwood 1-2

Storm/Screen Locks
Deltana 15

Strikes
Don Jo 2-3
Doormerica 21
Pro-Lok 14
Rockwood (Dust Proof) 9
Schlage 12, 16, 19, 26,30

Sweeps
National Guard 5
Pemko 4

Thresholds
Columbia 1
National Guard 2-3
Pemko 1-2

Wardrobe Hooks
Ives 7

Window Casement Lock
Deltana 18-19
Ives 1

Wrap Arounds
Don Jo 11-12
Pro-Lok 7-11

DOORS & SPECIALTIES CO.
COMMERCIAL DOORS • FRAMES • HARDWARE

Finish Chart

ANSI/MHMS Code	US Code	Finish Description	Base Material	Common Names
600	USP	Primed for painting	Steel	
601	US1B	Bright black japanned	Steel	
603	US2G	Zinc plated	Steel	
604		Zinc plated and dichromate sealed	Steel	
605	US3	Bright brass, clear coated	Brass	Polished Brass
606	US4	Satin brass, clear coated	Brass	Brushed/Satin Brass
609	US5	Satin brass, blackened, satin relieved, clear coated	Brass	Antique Brass
610	US7	Satin brass, blackened, bright relieved, clear coated	Brass	
611	US9	Bright bronze, clear coated	Bronze	Polished Bronze
612	US10	Satin bronze, clear coated	Bronze	Brushed/Satin Bronze
613	US10B	Dark oxidized, satin bronze, oil rubbed	Bronze	Duro, Duranodic
616	US10A	Satin bronze, blackened, satin relieved, clear coated	Brass, Bronze	
“”	US11	SAME AS ABOVE	Brass, Bronze	
618	US14	Bright nickel plated, clear coated	Brass, Bronze	Polished Nickel
619	US15	Satin nickel plated, clear coat	Brass, Bronze	Brushed/Satin Nickel
620	US15A	Satin nickel plated, blackened, satin relieved, clear coated	Brass, Bronze	Antique Nickel
621	US17A	Nickel, blackened, relieved, clear coated	Brass, Bronze	
622	US19	Flat Black Coated	Brass, Bronze	
624	US20A	Dark oxidized, statuary bronze, clear coated	Bronze	
625	US26	Bright chromium plated	Brass, Bronze	Polished Chrome
626	US26D	Satin Chromium plated	Brass, Bronze	Brushed/Satin Chrome
627	US27	Satin aluminum, clear anodized aluminum	Aluminum	
628	US28	Satin aluminum, clear anodized	Aluminum	
629	US32	Bright Stainless Steel	Stainless Steel	Polished Stainless
630	US32D	Satin stainless steel	Stainless Steel	Brushed/Satin Stainless
631	US19	Flat Black Coated	Steel	
632	US3	Bright brass, clear coated	Steel	
633	US4	Satin brass, clear coated	Steel	
636	US7	Satin brass, blackened, bright relieved, clear coated	Steel	
637	US9	Bright bronze, clear coated	Steel	
638	US5	Satin brass, blackened, satin relieved, clear coated	Steel	
639	US10	Satin bronze, clear coated	Steel	
640	US10B	Dark oxidized, satin bronze, oil rubbed	Steel	
643	US10A	Satin bronze, blackened, satin relieved, clear coated	Steel	
“”	US11	SAME AS ABOVE	Steel	
643E	US11	Aged Bronze (Schlage Commercial)		
645	US14	Bright nickel plated, clear coated	Steel	
646	US15	Satin nickel plated, clear coat	Steel	
647	US15A	Satin nickel plated, blackened, satin relieved, clear coated	Steel	
648	US17A	Nickel, blackened, relieved, clear coated	Steel	
651	US26	Bright chromium plated	Steel	
652	US26D	Satin Chromium plated	Steel	
716		Aged Bronze		

Standard Powder Coated Finishes

689	Aluminum
690	Dark Statuary Bronze
691	Light Bronze (Dull Bronze)
692	Tan
693	Black
695	Medium Amber
696	Brass (Gold)

Misc

1B	Black
1D	Black
1DM	Black-bright brass bearings & tips
2C	Zinc plated, commercial
2CD	Brushed zinc plated
2D	Brass tone dichromate
3LB	Light brass
9A	Bright bronze, no lacquer
10A	Antique bronze, lacquered
10D	Light Bronze (Dull Bronze)
10R	Matt lacquer antique bronze
14A	Bright nickel, oxidized & highlighted
14B	Black nickel, bright
17A	Black nickel, dull
20	Statuary bronze, light
BY	White enamel
GP/BGA	Gold polished (bright gold anodized)
GY	Grey enamel
L1	Luma color-black
L2	Luma color-dark bronze
L3	Luma color-med bronze
LS	Luma color-alum paint
P	Prime coat, beige

DOORS & SPECIALTIES CO.
COMMERCIAL DOORS • FRAMES • HARDWARE

Keying Information

Commercial Keying

9LAB001 Keying of commercial locks, deadbolts, & cylinders, including interchangeable cores.
$4.00 **NET**

9LAB002 Master keying of commercial locks, deadbolts, & cylinders, including interchangeable cores to any multi level system.
$5.00 **NET**

9LAB003 Cutting commercial keys, I/C core keys, control keys, and master keys.
$1.20 **NET**

Residential Keying

9LAB001R Keying of residential locks and deadbolts.
$2.00 **NET**

9LAB002R Master keying of residential locks and deadbolts.
$3.00 **NET**

9LAB003R Cutting of residential keys and master keys.
$1.00 **NET**

KEYING NOTES:
If we can use keys from the units you are buying we will use them and not charge you for keys. If not, we will charge you for the key blanks we need to use and the labor charge to cut them. Our standard is to provide two keys per change.

STAMPING:
Visual Key Codes (VKC) can be stamped on any cut key for an additional $1.00 NET cost per key. Limited to three symbols per key.

How to Determine Hand of Door

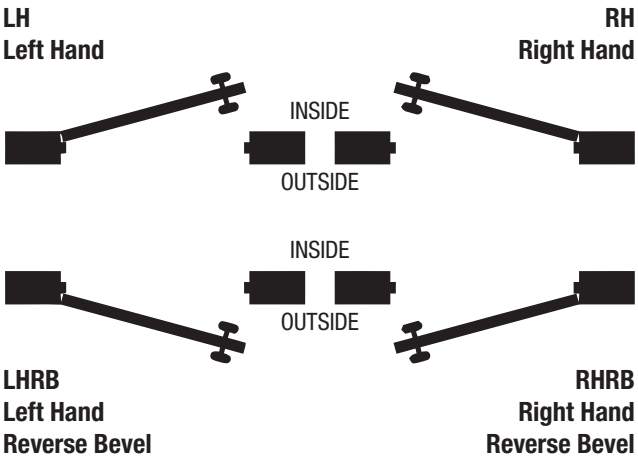

How to Determine Hand of Parts (Handed Levers)

LH **RH**

ABUS - *Padlocks*

24/70
2- 3/4" width
140 Series hasp recommended

Extreme Weather Protection - 24 Series

- Stainless-steel lock body and shackle for maximum corrosion protection
- All internal components made of brass and stainless steel
- Anti-pick mushroom pins
- Dust cover to protect keyway
- Also available in a rekeyable version that accepts a Master M1 cylinder or ABUS RH-5

Stocked Product

24/70C	Carded	KD
24/70B	KA	0198
24/70B	KA	0249

Uses ABUS keyblank 24/41 KBR4 pin

28/70
2- 3/4" width

140 Series hasp recommended

Buffo - 28 Series

- Stainless-steel lock body
- Hardened steel shackle
- Anti-pick mushroom pins

Stocked Product

28/70C	Carded	KD
28/70B	KA	0025
28/70B	KA	0026

Uses ABUS keyblank 24/41 KBR4 pin

ABUS – *Locks*

83 Series Locks

- Z-Bar® feature for conversion from key-retaining to non-key-retaining in seconds
- New Pinning Window™ makes rekeying faster and easier than ever before

- Solid brass body
- Brass Cylinder
- Quick Change Shackle

83/45 RK
1-3/4" Width

83/45 300RK
Less shackle

Stocked Product

83/45-100RK	Yale Keyway
83/45-200RK	Kwikset Keyway
83/45-300RK	Schlage C Keyway
83/45-300RKWO	Less shackle, Schlage C Keyway
83/45-323RK	Schlage Everest Keyway
83/45-700RK	Sargent LA-LC Keyway
83/45-800RK	Weiser Keyway
83/45-3000RK	Schlage C-L Keyway
83/45-M1RK	Master M1 Keyway

83CS/50
2" Width

- Brass or Chrome Cylinder
- Hardened Special Alloy Shackle
- Quick Shackle Change

Stocked Product

83/CS/50-300RK	Schlage C Keyway
83/CS/50-3000RK	Schlage C-L Keyway

ABUS - *83 Series Lock*

1-3/4" Width

83KnK/45

Key-in-Knob Padlocks

- Hardened Special Alloy Shackle
- All Drivers included
- Long shackle versions are available in Special Alloy, Brass and Stainless Steel
- Accepts all of these OEM Cylinders: ASSA, KABA, Lori, Medeco #20W2000, Schlage C, Schlage Everest, Schlage Primus

Stocked Product

83KnK/45	Key in Knob Padlock

1-3/4" Width

83IC/45

Interchangeable Core Padlocks

- Hardened Special Alloy Shackle
- Z-Bar feature for conversion from key-retaining to non-key-retaining in seconds
- Accepts all major IC cylinders (5, 6 & 7 pin)
- All Drivers included
- Accepts these OEM small format IC Cores: Arrow, Best, Eagle, Falcon, KSP, Lori, Keymark, Medeco, Peaks
- Less Cylinder

Stocked Product

83IC/45	Interchangeable Core Padlock

Shackles Only for 83 Series

- 5/16" diameter, Special Alloy Shackle

Stocked Product

2" Shackle	8002-2
3" Shackle	8003-3
4" Shackle	8004-4
6" Shackle	8009-6

ABUS – *Locks*

2" Width

83WP/53

Weather Proof
Solid Hardened Steel Zinc Plated

- Chrome Plated Brass Cylinder
- Hardened Special Alloy Shackle
- Protective cover over keyway
- Longer shackle versions are available in Special Alloy
- Ideal for harsh outdoor conditions
- 5/16" diameter Shackle

Stocked Product

83WP/53-300RK	Schlage C Keyway
83WP/53-3000RK	Schlage C-L Keyway

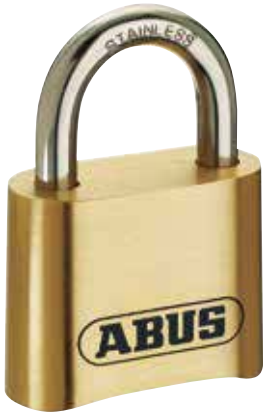

2" Width

180/50

180 Series
Resettable Combination Padlocks

- Solid brass body
- Internal brass components
- Stainless-steel shackle
- 10,000 possible combinations
- Resetting tool included

Stocked Product

180/50 C	Standard Shackle	5/16" diameter, 1" Shackle
180HB/50 C	Long Shackle	5/16" diameter, 2-1/4" Shackle

2" Width

180HB/50

ABUS - *Hasps*

110/155 EC

110/195 EC

110 Series

- Hardened steel for extra strength
- Seamless eye loop prevents prying
- Center-lock pin resists being driven out at end
- Coach bolts included

Stocked Product

110/155 EC	6-1/4" length	Carded
110/195 EC	7-3/4" length	Carded

140/120 EC

140/190 EC

140 Series

- Stainless steel for extra strength
- Concealed seams on eye loop
- Center-lock pin resists being driven out at end
- Includes 3 carriage bolts (5mm x 50mm) and 6 wood screws (10mm x 26mm)
- Designed for the Diskus® Padlock

Stocked Product

140/120 EC	4-3/4" length	Carded
140/190 EC	7-1/2" length	Carded

File Cabinet Bars

- Available in 1-, 2-, 3-, 4-, and 5-drawer versions
- Meets the DOD's Industrial Security Manual
- Constructed of heavy 16-gauge formed steel
- Built-in spring-loaded hinge
- Self-tapping mounting screws included
- 10 bars per factory pack
- Largest diameter 5/16" padlock will fit

Stocked Product

File Bar 1	1 Drawer	11" length
File Bar 2	2 Drawer	21.5" length
File Bar 3	3 Drawer	33.5" length
File Bar 4	4 Drawer	45" length
File Bar 5	5 Drawer	56" length

ABUS - *Key Blanks*

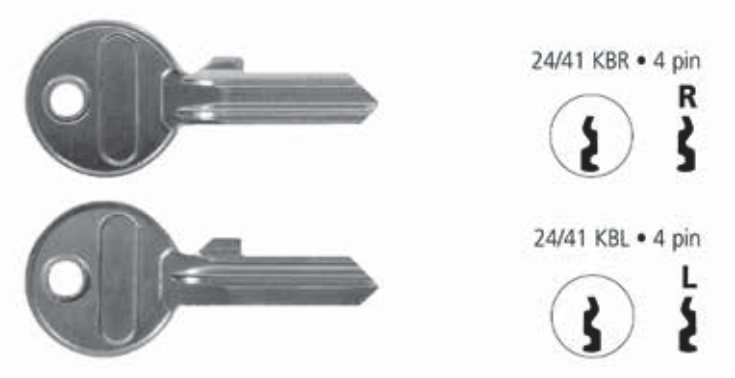

Stocked Product

24/41	KBR
24/41	KBL
85/40	KBR

Adams Rite - *Electric Strikes*

7140 Series

Product Description & Features

- For use with key-in lever latches
- **Lip Extension:** 1.06” from door line to jamb edge
- Faceplate measure 1-1/4” x 4-7/8”
- ANSI/BHMA E09321 Grade 1
- **Strike Opening:** 5/8” x 1-7/16” x 1/2” deep bolt retainer jaw is made of stainless steel.
- **Case:** Approximately 1” x 3-3/8” x 1-5/8” deep
- Fail secure operation
- **Voltage:** 24 VAC / 24 DC continuous, 24 VAC / 24VDC intermittent

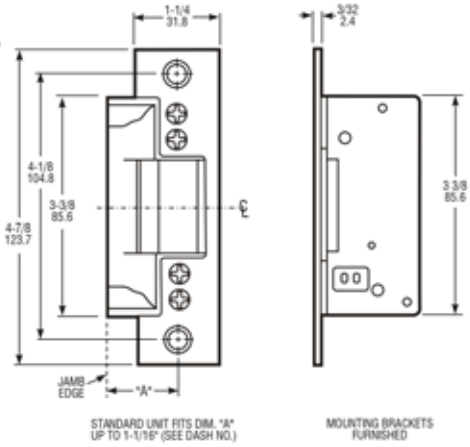

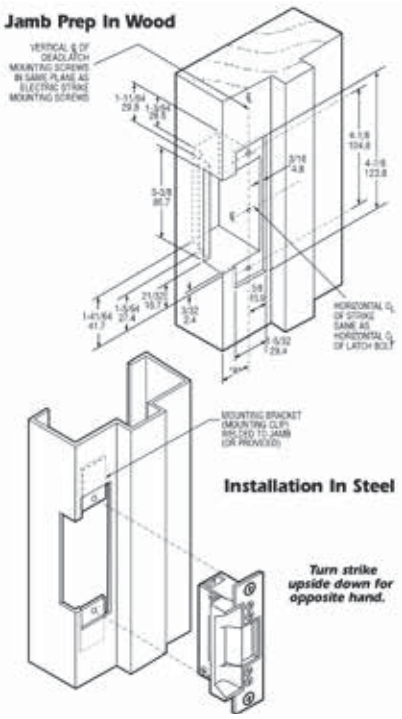

Stocked Product:
Finishes: Aluminum, Dark Bronze

74R1 Series

Product Description & Features

- For use with Von Duprin, Monarch, Precision and Pullman latches
- **Lip Extension:** 1.06” from door line to jamb edge
- Faceplate measure 1-3/4” x 9-3/4”
- ANSI/BHMA E09321 Grade 1
- **Strike Opening:** 5/8” x 1-7/16” x 9/16” deep bolt retainer jaw is made of stainless steel.
- **Case:** Approximately 1” x 3-3/8” x 1-5/8” deep
- Fail secure operation
- **Voltage:** 24 VAC / 12 VDC intermittent 24 VAC / 24 DC continuous

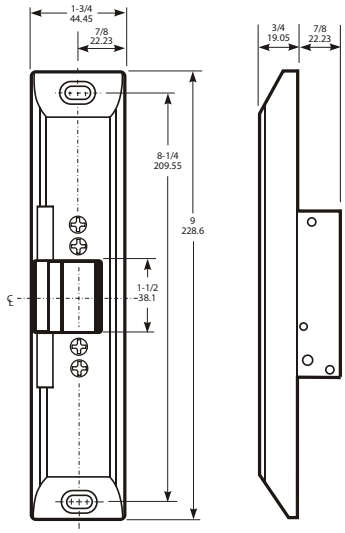

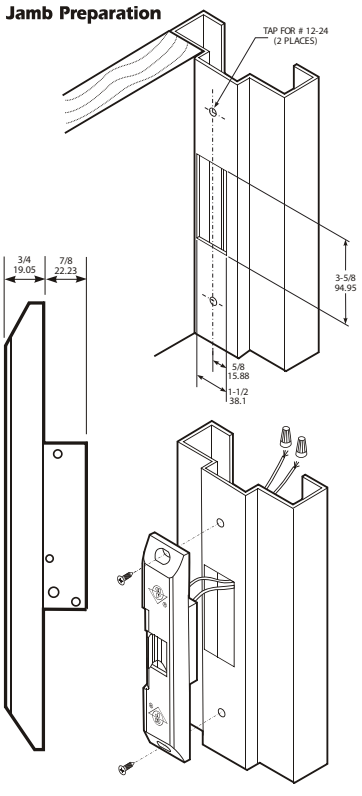

Stocked Product:
Finishes: Aluminum, Dark Bronze

Adams Rite - *Electric Strikes*

Accessories

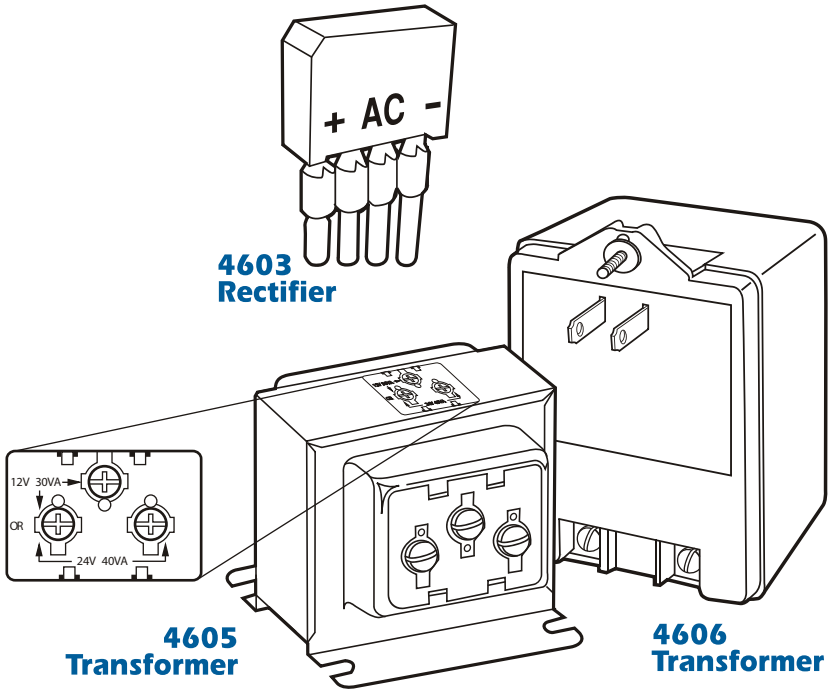

4603 Rectifier

Converts low voltage AC current to DC of same voltage. Installs in low voltage line between transformer and strike. Full hyphen bridge type. Rated 2 amps. (200 PIV).

AC CONTINUOUS

AC Continuous duty strikes are supplied with a 4603 Rectifier attached to the solenoid leads. These are silent operation strikes -- without the buzzing sound. They use a DC solenoid, but the externally attached full-wave bridge rectifier allows them to be connected to AC power.

4605 Transformer

Converts 120VAC to 12VAC/24VAC. Rated 40 Volt-amp output assures plenty of power for strike release.

4606 Transformer

Converts 120VAC current to 24VAC. Plugs into standard wall outlet.

Adams Rite - *Exit Devices*

8600 - Series Narrow Stile Concealed Vertical Rod Device

DIMENSIONS & SPECIFICATIONS:

- ANSI/BHMA E09321 Grade 1
- **Handing:** Device is non-handed
- **Bar Height:** Adjustable from 30” to 44”
- **Projection:** 2-5/8” when fully projected 1-5/8” when dogged
- **Stile Width:** 2” minimum
- **Door Height:** Adjustable for doors up to 66” above selected bar height

Stocked Product:
Sizes: for 36” width door
Finishes: Aluminum, Duro

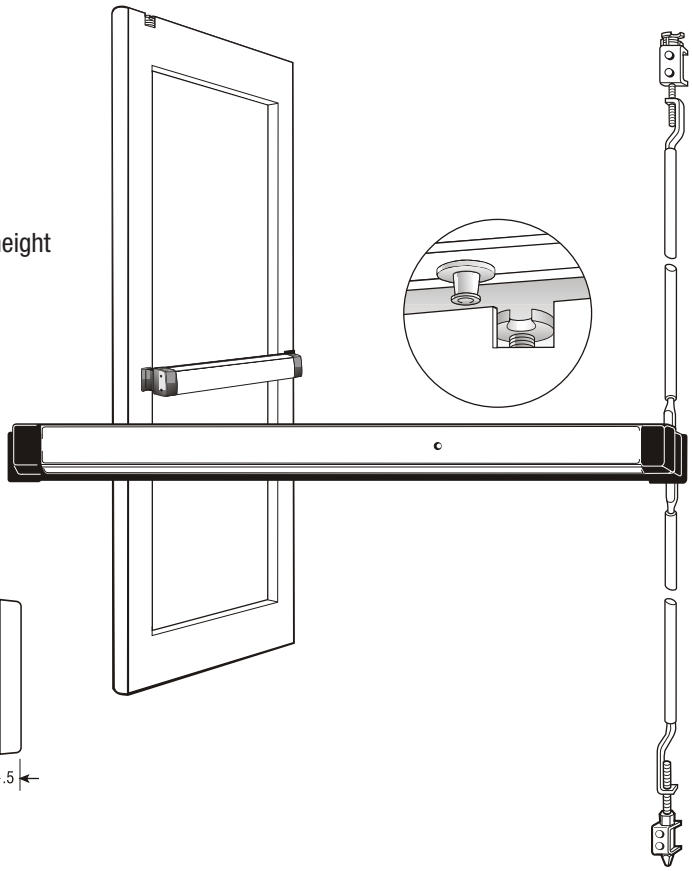

Accessories
8650 - Escutcheon

Required to mount any make standard Mortise cylinder, with MS cam, on outside of door.

- Less Mortise Cylinder

Stocked Product:
Finishes: Aluminum, Duro

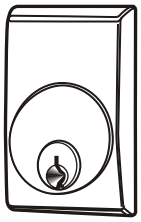

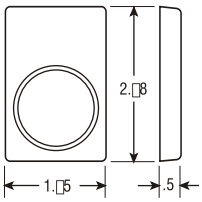

8650

8800 - Series
Rim Exit Device For Aluminum Doors

DIMENSIONS & SPECIFICATIONS:

- ANSI/BHMA E09321 Grade 1
- **Handing:** Device is non-handed
- **Door Thickness:** Suits 1-3/4” up to 2-1/4”
- **Projection:** 2-5/8” when fully projected 1-5/8” when dogged
- **Stile Width:** 2” minimum
- **Door Height:** Adjustable for doors up to 66” above selected bar height
- **Stile Width:** 8800 - 2” for aluminum style

Features

- Patented “standard” bolt interlocks door to frame.
- Push bar is anodized or clad not plated.
- Unobstrusive design for clean sight lines.

Stocked Product:
Sizes: for 36” width door
Finishes: Aluminum, Duro

Adams Rite - *Exit Device Options & Accessories*

Electric Latch Retraction - *For all Adams Rite Exit Devices*

The EL or LR option uses a solenoid mounted in push bar for instantaneous unlocking and locking of exit device from a remote location. The device is fail secure and can be used on fire rated as well as life safety applications.

Note: Power Supply available - F/8600 series, P/N PSLR

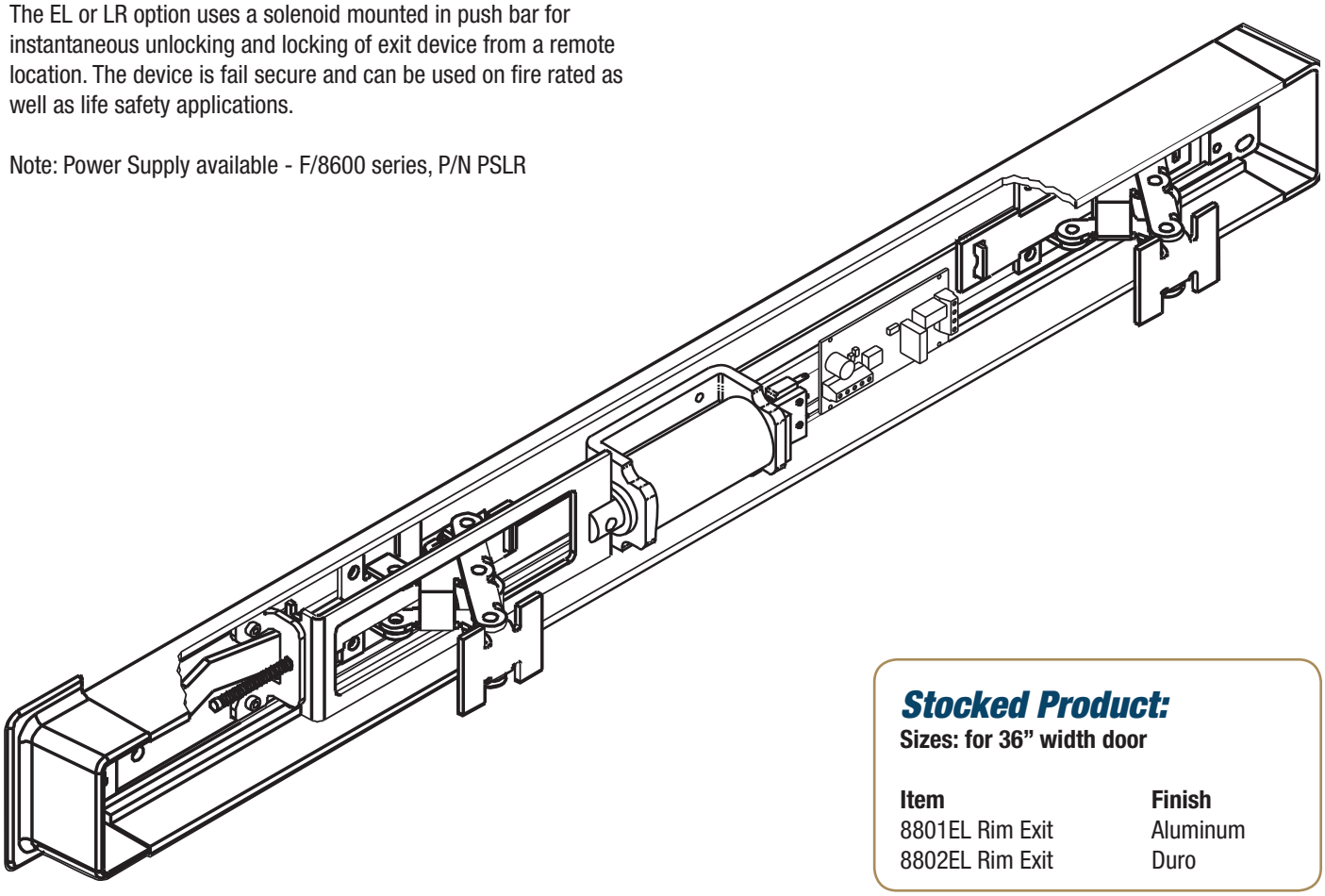

Stocked Product:

Sizes: for 36" width door

Item	Finish
8801EL Rim Exit	Aluminum
8802EL Rim Exit	Duro

Adams Rite - *Store Front Hardware Accessories*

MS4043 Series - Cylinder Guard

SECURITY RING

Made of hardened steel. Free-swiveling when properly installed.

RETAINER RING

Hardened steel, plated for corrosion resistance.
Permits security ring to swivel.

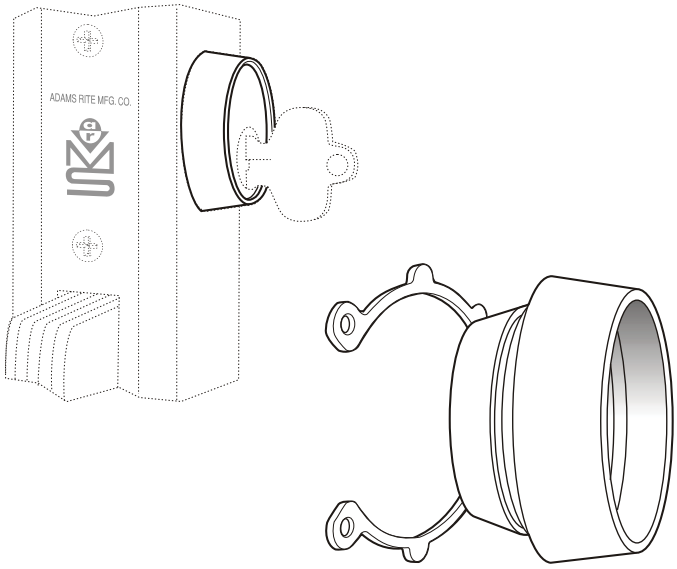

Stocked Product:
Finishes: Aluminum, Dark Bronze

Adams Rite - *Store Front Hardware Accessories*

4569 - Eurostyle Deadlatch Handle

Product Description & Features

- **Escutcheons:**1-3/8“ x 4”, designed to match the narrow stile door’s clean lines. Steel mounted base is secured by hidden screws and has two large helical compression springs. (One becomes a “spare” once handling is given.) A 1/4” square heat-treated spindle is part of escutcheon assembly, which interlocks with the cam plug. Finished to match lever.
- **Function:** Designed to operate 4500/4700/4900 Series latches by a natural downward hand movement. These handles incorporate an activator cam disc that mounts on the handle escutcheon and fits solidly into the cylinder hole of the latch. Not intended for use as a door pull.
- **Cam Plugs:** Secured in latch body by cylinder setscrew, plug is also rigidly tied to handle escutcheon by hardened steel pins. Handing can be reversed by removing a spring clip, “flopping” the cam and replacing the clip.
- **Levers:** Lever of cast aluminum, in choice of 130 Satin Aluminum or 121 Dark “Bronze”. Modern European styling offers a generous hand grip with shank offset away from the narrow stile jamb for hand safety. 4569 has return end to meet anti-snag code requirements.

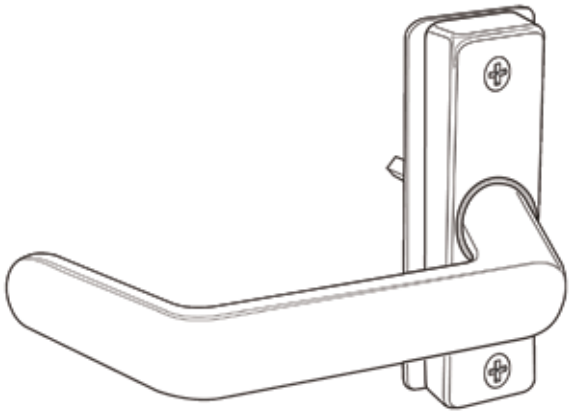

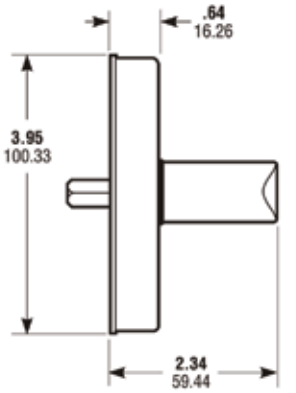

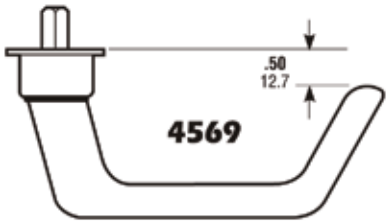

REVERSIBLE 4580
Cam Disc INCLUDED
(REQUIRED TO OPERATE
4500/4700/4900
SERIES LATCHES)

Stocked in Sacramento only

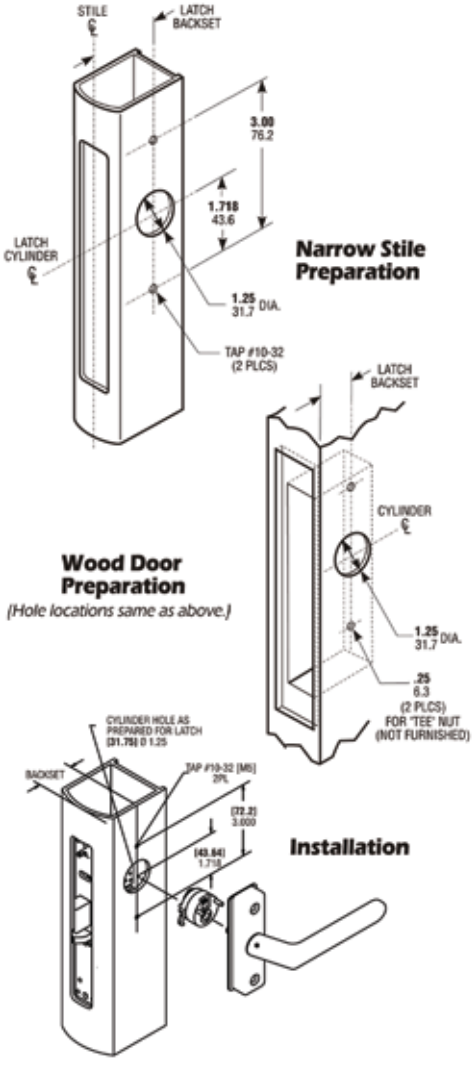

Stocked Product:

Item #	Handing	Door Thickness	Finish
4569-501-130	LH	1-3/4” - 2”	Satin Aluminum
4569-601-130	RH	1-3/4” - 2”	Satin Aluminum
4569-501-121	LH	1-3/4” - 2”	Bronze
4569-601-121	RH	1-3/4” - 2”	Bronze

- Pre-handing can be specified LH or RH although re-handing in the field is easily accomplished. Standard handles are for 1-3/4“ thick doors.
- Packed individually with cam plug handed LH or RH as specified.
- Two 10-32 mounting screws furnished.

Adams Rite - *Store Front Hardware Accessories*

4089 - Exit Indicator

Product Description & Features

- **Function:** Provides unmistakable notification of an exit door's "locked" or "open" condition. Under many local building safety codes, this allows the use, in certain occupancies, of a security deadlock instead of less secure panic devices. It includes two permanent adhesive header signs: "THIS DOOR TO REMAIN UNLOCKED DURING BUSINESS HOURS." (That wording is according to Uniform Building Code.) The second sign for NFPA and other local codes reads: "THIS DOOR TO REMAIN UNLOCKED WHEN THE BUILDING IS OCCUPIED.
- **Message Panel:** "OPEN" appears in black letters on white background when lock is retracted and "LOCKED" in red letters when actuated. Also available with red (locked) and green (unlocked) wordless panels.
- **Material/Finish:** Indicator escutcheon is zinc alloy with 130 (Satin Aluminum) Ritecoat finish. Header sign is clear aluminum match with black letters.

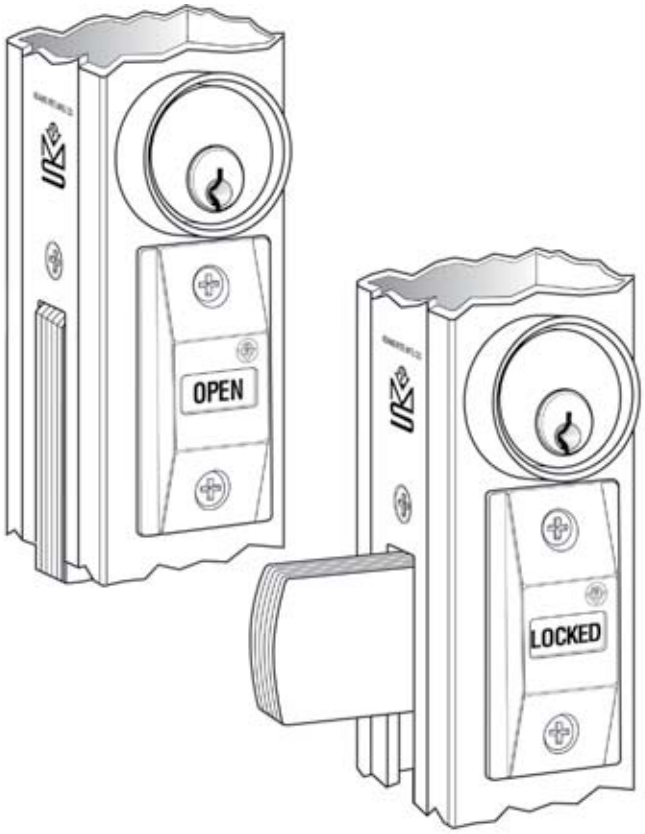

COMPATIBLE LOCKS:

- **1830**
- **1870**
- **MS1837**
- **MS1850S**
- **MS1850S-505**
- **MS1850SN**
- **MS1850SN-505**
- **MS1860**
- **MS+1890**
- **SCH1850S**
- **SCH1850SN**

Stocked Product:

Item#	Finish
4089	Aluminum, Duro

Adams Rite - *Store Front Hardware Accessories*

4015 - Threshold Bolt for Aluminum Stile Doors

Product Description & Features

- **Cylinder Height:** Standard threshold bolt rod is sufficient for cylinder height up to 53-7/16”.
  It is fully threaded and can be cut off for low cylinder heights.
  Also available to volume users , cut and threaded only for specific cylinder heights.
- **Adjustment:** Exact adjustment of threaded rod to cylinder height is locked in place by hexagonal threshold bolt.
- **Function:** Adding the 4015 bolt to a pivoted bolt MS deadbolt allows Maximum Security for pairs of doors by the turn of a single key. Simultaneously dropping steel hexbolt into the threshold and pivoting the massive MSÂ® bolt into the mating door’s stile, the two-point lock secures the entire double door entrance. The 4015 threshold bolt is harnessed to the rear of the pivoted bolt. It may be added to any basic MS1850S or MS1850SN deadbolt.
- **Threshold Bolt:** Hexagonal 3/8” flat to flat.
  Made of stainless steel.
- **Operation:** 360° turn of key or thumbturn in basic MS lock throws counterbalanced bolt into opposite door and drop-bolt into threshold. Key can be removed only when bolts are in a positively locked or unlocked position.
- **Options:** For “universal” application, specify 4015-18 with fully threaded rod for cut off to any cylinder height below 53”.

Stocked Product:
Item#
4015

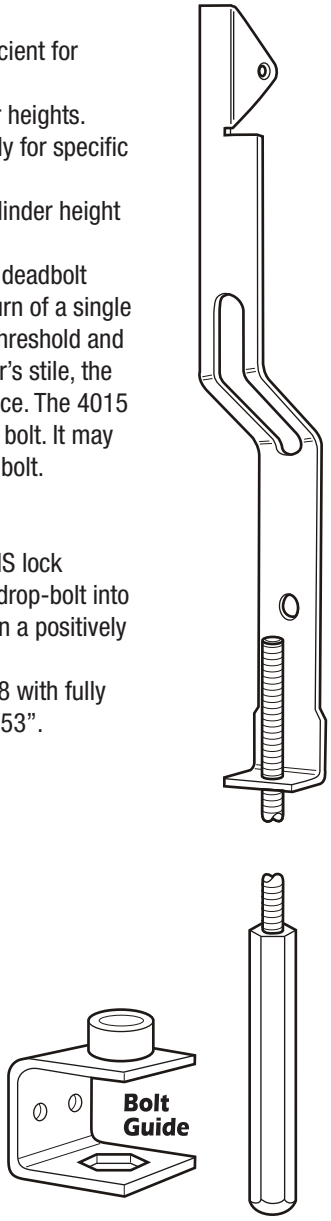

ANSI/BHMA Type E8241 (Grade 1)

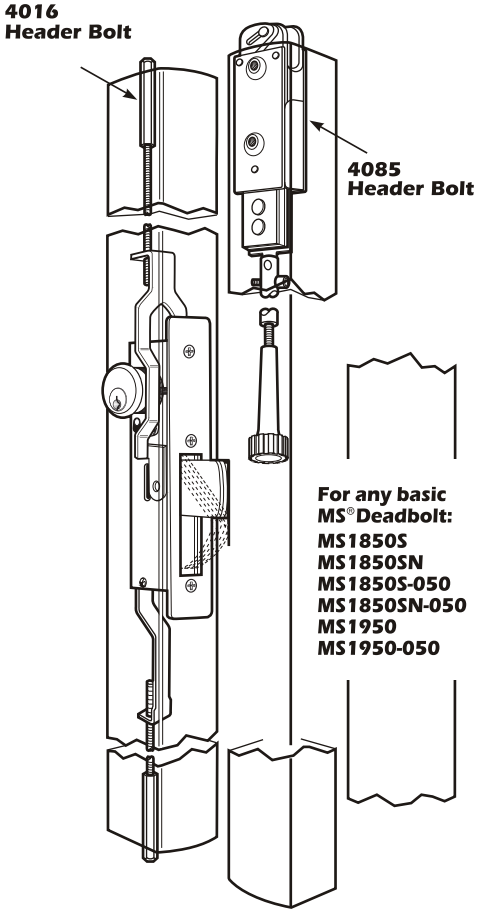

Adams Rite - *Store Front Hardware Accessories*

4016 - Header Bolt for Aluminum Stile Doors

Product Description & Features

- **Strike:** For header bolt a 1/2" diameter hole in metal frame is suitable, or for non metal installations, 4005 strike is availabel
- **Adjustment:** Exact adjustment of threaded rod to cylinder height is locked in place by hexagonal threshold bolt.
- **Door/Cylinder Height:** The standard version is designed for a 7' door height with cylinder height as low as 35". Can also be ordered for up to 10'door with additional extension.
- **Function:** Adding the 4016 Header Bolt and the 4015 Threshold Bolt to a pivoted MS® deadbolt allows for Maximum Security for pairs of doors by the turn of a single key. Simultaneously extending the stainless steel hexbolts top and bottom and pivoting the massive MS® deadbolt into the mating stile, the three-point lock secures the entire double door entrance. The 4016 can be added to any basic MS1850S, MS1850SN or for two-points top and bottom use with 1870/1870HM Cylinder-Operated Flushbolt. Not applicable to 7/8" backset locks.
- **Header Bolt:** Hexagonal 3/8" flat to flat. Made of stainless steel.
- **Threshold Bolt:** Hexagonal 3/8" flat to flat. Made of stainless steel.
- **Operation:** 360° turn of key or thumbturn in basic MS lock throws counterbalanced bolt into opposite door and hexagonal bolt into header strike. Key can be removed only when bolts are in a positively locked or unlocked position.
- **Options:** For "universal" application, specify 4015-18 with fully threaded rod for cut off to any cylinder height below 53".

ANSI/BHMA Type E82111 (Grade 1)

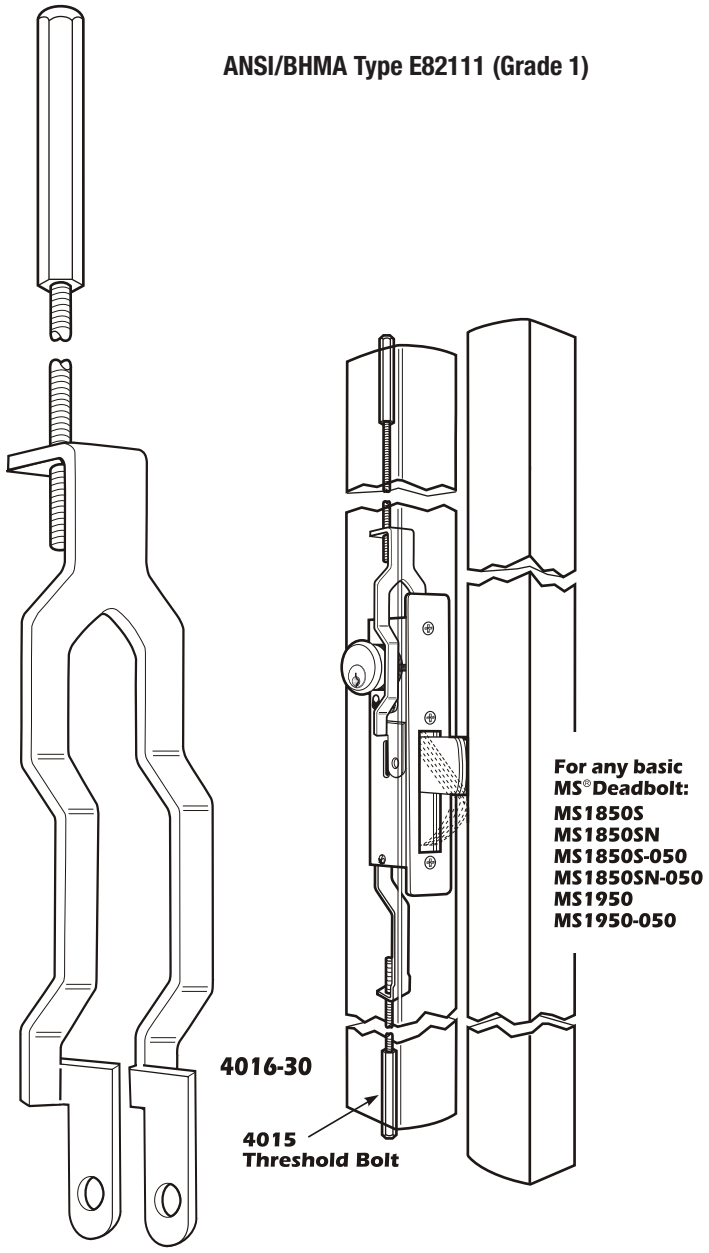

Stocked Product:

Item#	Backset
4016-2001	31/32"
4016-3001	1-1/8"

Adams Rite - *Store Front Hardware Accessories*

INCHES
MILLIMETERS
Nominal, subject to tolerance extremes.

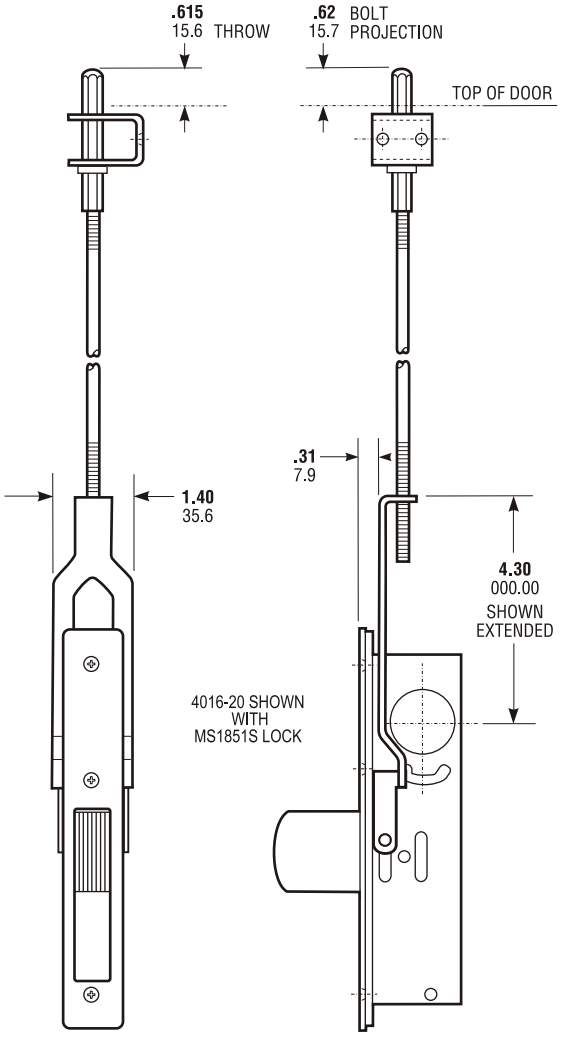

INSTALL ADAPTOR ARM TO LOCK FROM TOP WITH BOLT RETRACTED AS SHOWN. INSTALL PIN THROUGH SLOTS IN LOCK SIDE PLATES, PASSING THROUGH HOLES IN BOTH SIDES OF THE ADAPTOR ARM.

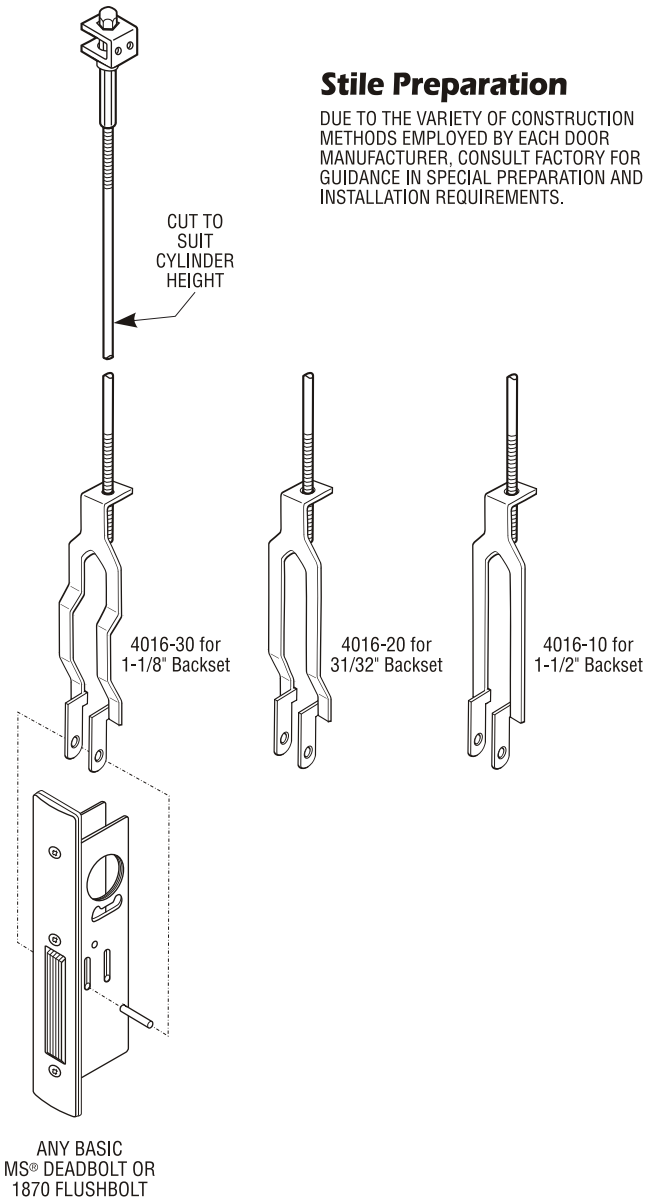

Stile Preparation

DUE TO THE VARIETY OF CONSTRUCTION METHODS EMPLOYED BY EACH DOOR MANUFACTURER, CONSULT FACTORY FOR GUIDANCE IN SPECIAL PREPARATION AND INSTALLATION REQUIREMENTS.

Adams Rite - *Store Front Hardware Accessories*

MS1850S - Deadbolt for Aluminum Stile Doors *(1' x 6-7/8" Faceplate)*

Product Description & Features

- **Cylinder Backset:** 31/32", 1-1/8" or 1-1/2" only
- **Case:** Steel with corrosion-resistant plating. 1" x 6" x depth. (Depth varies by backset.)
- **Function:** A huge bolt of laminated stainless steel, nearly three inches long, activated by an uncomplicated pivot mechanism, has made this basic MS® Deadbolt the standard of the narrow stile door industry. The length of this bolt provides maximum security for a single leaf door, even a very tall and flexible one or an installation where the gap between door and jamb is greater than it should be.
- **Bolt:** 5/8" x 1-3/8" with 13/16" throw. Eight ply laminated stainless steel with Alumina Ceramic core defeats any hacksaw attack (including rod-type "super" hacksaws) while hook shape repels prybar attempts to "spread" door from its jamb or lift it off its track.
- **Strike:** See next page for dimensions of strike slot which can be cut in metal jamb. Trim plate, box strike, and armored strike are also available.
- **Operation:** 360° turn of key or thumbturn throws or retracts the counterbalanced bolt. Key can be removed only when bolt is in a positively locked or unlocked position. Lock accepts any standard 1-5/32" diameter mortise cylinder or thumbturn from either or both sides. Cylinder must have MS® dimensioned cam.

ANSI/BHMA Type E8211, Grade 1

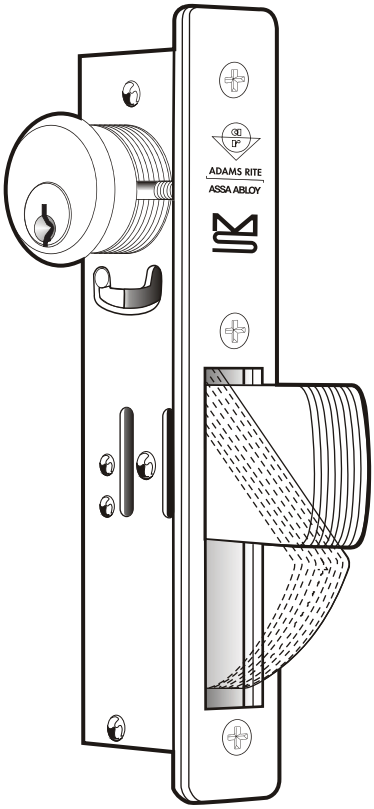

Stocked Product:

Item#	Backset	Finish
MS1850S	31/32"	628 Clear Anodized
	1-1/8"	313 Dark Bronze Anodized

Adams Rite - *Store Front Hardware Accessories*

INCHES
MILLIMETERS
Nominal, subject to tolerance extremes.

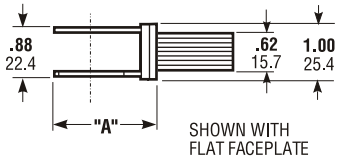

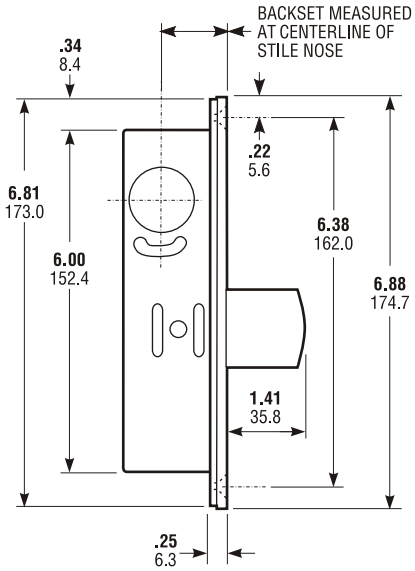

BACKSET	"A"
31/32" 24.6	**1.63** 41.4
1-1/8" 28.6	**1.78** 45.2

ARMORED FACEPLATE
1" x 6-7/8"

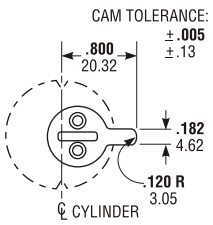

Cylinder Cam

MS1850S Series locks are operable by any standard 1-5/32" diameter mortise cylinder with special MS® cam dimensioned as shown. Cylinders with MS® cams can be readily obtained from most cylinder manufacturers.

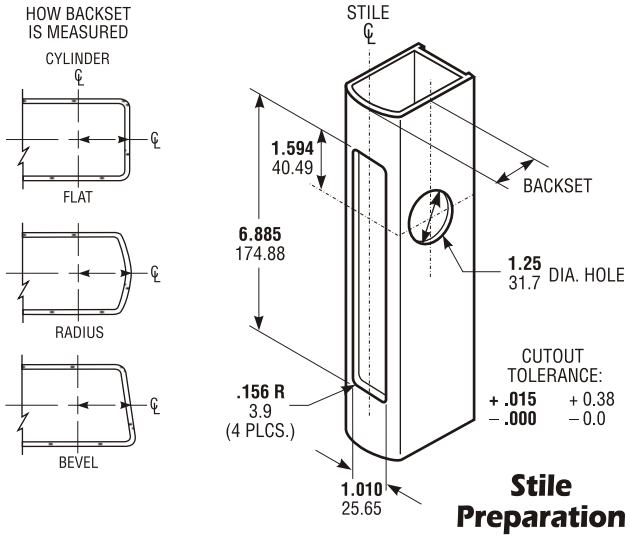

Stile Preparation

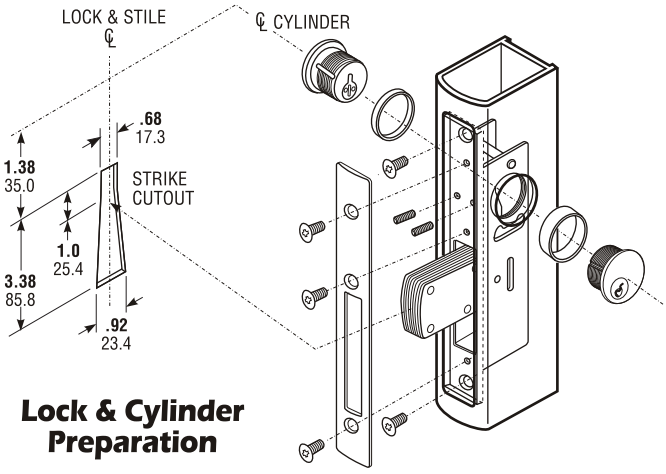

Lock & Cylinder Preparation

Stocked Product:

Item#	Backset	Finish
1851S210	31/32"	628/313
1851S310	1-1/8"	628/313
1851S-050-250	31/32"	628/313
1851S-050-350	1-1/8"	628/313

Adams Rite - *Store Front Hardware Accessories*

4510 - Series Deadlatch Deadbolt for Aluminum Stile Doors

Product Description & Features

- **Cylinder Backset:** 31/32", 1-1/8" or 1-1/2" only
- **Case:** Steel with corrosion-resistant plating. 1" x 5-13/16" x depth. (Depth varies by backset.)
- **Function:** Flexibility of traffic control during and after business hours is offered by 4510 Series Deadlatches. A reverse turn of the key while bolt is held retracted retains the bolt, to allow two-way traffic for hospitals, banks, stores and other buildings which require free entrance at certain times and exit-only at other times. Interchangeable, without stile modification, with any MS1850A or MS1850S deadbolt of same backset and faceplate shape. (They do not, however, provide the same maximum security level as the MS Deadbolt.
- **Latch Bolt:** 1/2" x 1" x 1/2" throw. All metal with hardened steel internal pins. Handing is reversible without special tools.
- Auxiliary Bolt: All metal. Deadlocks latch bolt to prevent "loiding" or case-knife entry.
- **Strike:** Standard strike furnished is 4902-01 for flat jamb where door closes flush or nearly flush. Also available: radius strike for opposite stile in paired doors; longer strike (4901) to cover slot strike of MS® lock; long lip strikes for centerhung doors.
- **Operation:** Turn key or operate handle to retract spring-loaded latch bolt. To hold bolt retracted, push it in and secure by reverse turn of key. Uses any standard mortise cylinder with MS®cam.

ANSI/BHMA Type E823, Grade 1

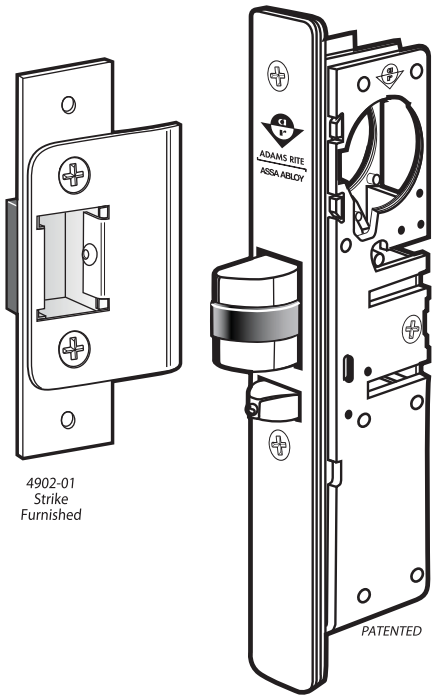

4902-01 Strike Furnished

Options

Backset, Faceplate Shape, Finish, Strike and Handing must be specified when ordering.

STANDARD PACKAGE

Individually boxed with strike and machine screws for mounting. Cylinders, paddle or handle available at extra cost. Shipping weight: 1-1/4 lbs. Also available in a 25 unit pack for volume users.

Stocked Product:

Item#	Backset	Handing	Finish
4510-510	31/32"	LH or RHR	628/313
4510-610	1-1/8"	RH or LHR	628/313

Alarm Lock

T2 - DL2700 Series - Stand Alone Digital Locks

Features:

- Clutch mechanism offers long lasting performance
- Heavy duty trim design with self contained, fully programmable, 12 digit key pad
- Non handed
- Key bypass capability
- Multi level user, up to 15 different codes
- Individual, group or total lockout codes

Specifications:

- Fits 1-5/8" to 1-7/8" door thickness
- 2-3/4" backset
- Power 5 AA alkaline batteries (included)
- Standard ANSI A115 series prep
- Compliance grade 1 heavy duty lockset
- Furnished standard Schlage C keyway for all overide locks
- IC model - **supplied less core**

Options

- "WP" Weatherproof with operated temperature Range -20F to 151F

Stocked Product

- **Finishes:** 26D (Schlage Override Only)
- **Key Override:** Best LC (less Core), Schlage C Keyway

T3 - PDL3000 Series - Digital Lock with Prox and Audit

Features:

- Accepts most HID proximity cards
- 2000 user codes including master, manager, supervisor & basic user
- May use card, code or card and code
- User data can be added to software via the lock, card reader module or PC
- Fingertip keypad or windows PC programmable
- Real time clock enables up to 500 schedule events and holiday schedules
- Rhodes/Saturn type design

Specifications:

• Keypad	Weatherproof all metal
• Backset	2-3/4" standard
• Door Thickness	1-5/8" to 1-7/8"
• Door Prep	ANSI A115 modified by additional throughbolt holes
• Strike	1-1/8' x 2-3/4" T strike and 1-1/4" x 4-7/8" ASA strike included
• Compliance	Grade 1, UL listed

Stocked Product

- **Finishes:** 26D
- **Key Override:** Schlage C Keyway
- **Lever type:** Rhodes/Saturn

Alarm Lock

PG Series - Door Alarms

Features:

- Max flex terminals that provide:
  - continuous power with additional external power supply
  - multiple door monitoring with external reed switches
  - form C relay output permits remote monitoring
- Conventional plug in
- Improved 95db siren
- Visual magnetic alignment mode
- **Supplied less cylinder** - requires 1-1/4" mortise cylinder

Note: PG21 same as PG21E but without max flex terminals

Stocked Product
- PG21
- **Finish:** Metallic Silver

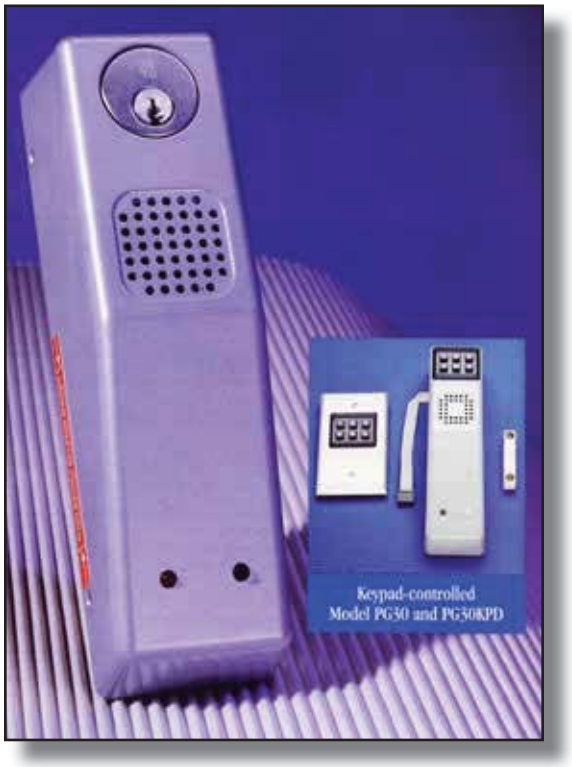

Model 700 / 715 - Alarm Exit Device

Stocked Product
- For 36" width door
- 700 and 715 models
- **Finish:** Aluminum

Features:

- Model 700 has changable 2 minute alarm cut off of manual reset
- Non handed
- Audible low battery warning and cam for exterior key control
- Includes door warning sign and bar dogging function
- Power 9VDC alkaline battery
- Lock bolt: 1" throw - heavy die cast zinc alloy with steel inserts
- Sound level 95db
- **Supplied less cylinder**, requires rim cylinder

Model 715:

- Stand alone delayed egress panic. 15 second delayed latch, instant egress in case of emergency or fire. Meets NFPA 101 Lite Safety code. Includes monitoring output for secondary siren. CCTV or remote monitoring
- **Supplied less cylinder**, requires rim cylinder

Door & Exit Alarms

General Accessories

241 - Transformers

241 - 24VDC - 500ML

---

271 - Armored Door Loop

- For use with electrified locks. An easy means for bringing electric current from the hinge side of a door frame to the door. 18" flexible armored cable. End brackets are deep drawn anodized aluminum to conceal wire connections.

Stocked Product
- **Finish:** Metallic Silver

Babcock Davis

ITK Series Access Panel / Fire Rated

Features:

- Fire rated walls and ceilings
- Wall rating U.L. 1-1/2 hour B door
- Ceiling rating Warnock Hersey 3 hour
- Continuous hinge
- Insulation 2" thick and fire retardant
- Frame 16 gauge cold rolled steel
- Door 20 gauge cold rolled steel
- Flange 1" wide
- Flush key / knurled knob
- Gray prime finish with baked on rust inhibitor
- Rough opening 1/4" over

K - Knurled knob/key operated latch bolt
Patented ball bearing latch bolt operated by a screw-in type knurled knob or flush key. This is the standard latching mechanism on our fire rated models.

Options:

1551 hardware pack includes screws, Key and Knob

Stocked Product
Sizes:
08 x 08, 12 x 12, 14 x 14, 16 x 16, 18 x 18, 22 x 30, 24 x 24, 24 x 30, 24 x 36

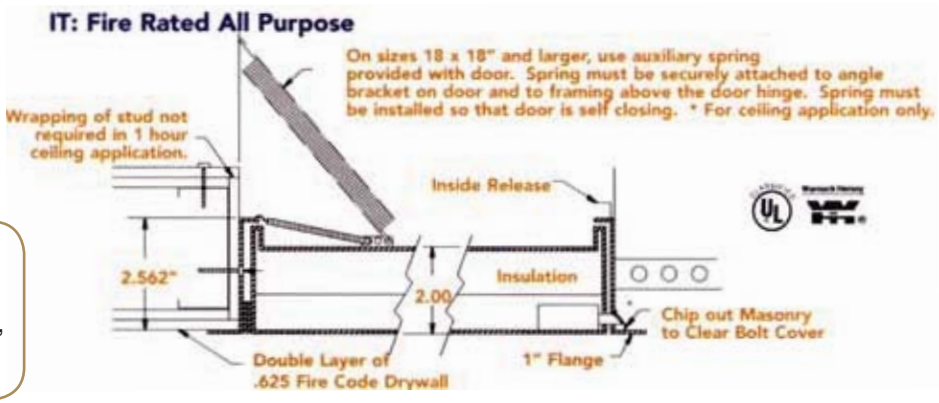

NTC Series Access Panel / Non Fire Rated

Features:

- All purpose flush access panel for walls and ceilings
- Concealed spring pin hinge on sizes up to 24" x 36"
- Frame 16 gauge cold rolled steel
- Door 14 gauge cold rolled steel
- Flange 1" wide exposed
- Screwdriver cam latch
- Gray prime finish with baked on rust inhibitor
- Rough opening 1/4" over

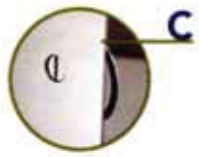

C - Screwdriver operated cam latch
Most commonly used for standard applications.

Stocked Product
Sizes:
08 x 08, 12 x 12, 14 x 14, 16 x 16, 18 x 18, 24 x 24, 24 x 30, 24 x 36

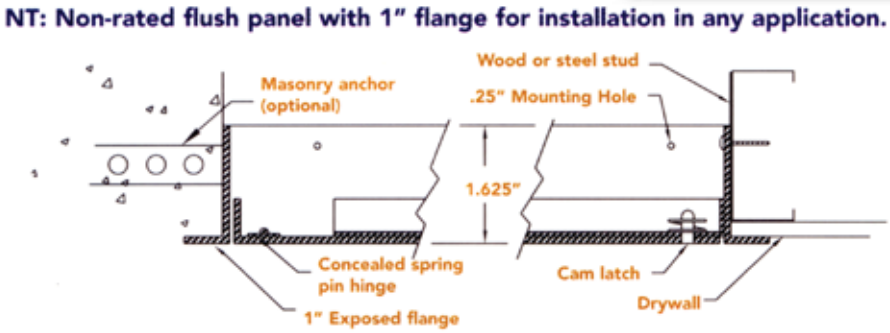

Bobrick – *Washroom Accessories*

PRESTIGE BUILDINGS

Corporate Headquarters
Class A Office Projects
Civic Center Icons
Universities

Restroom Usage and Accessory Requirements:

Low to moderate traffic
Minimal use and abuse
Architectural design excellence
Quality materials and equipment

STANDARD USE BUILDINGS

Commercial Office Facilities
Healthcare Centers
Hospitality Projects
Manufacturing Plants

Restroom Usage and Accessory Requirements:

Moderate to heavy traffic
Some heavy use and abuse
Equipment durability important
Budget-sensitive specifications

HEAVY TRAFFIC BUILDINGS

Heavy Traffic Buildings
K–12 Schools
Retail Malls
Amusement, Recreation
Transportation Centers

Restroom Usage and Accessory Requirements:

Periods of extreme traffic flows
Vandal-prone use and abuse
Equipment durability over design
Extra-large capacities

Conversion Chart

ASI #	Bobrick#	Moen/CSI
0185	7120	
0030	2888	
0332	822	
0469	3944	
0620	165	
3700	5806	
0210	262	
0347	2111	
0477SM	221	
0462AD	369	
0828	279	
0535	293	
0852	254	
0345	2112	
0710		110CH
7305-S		P1780

Bobrick – *Washroom Accessories*

B5806 - Series

GRAB BARS - CONCEALED MOUNTING WITH SNAP FLANGE

FEATURES

- Constructed of 18-gauge (1.2mm), type 304 satin-finish stainless steel tubing in 1 1⁄4" diameters.
- Concealed mounting flange 1⁄8" (3mm) thick, type 304 stainless steel plate, 2" W x 3 1⁄8" H (50 x 80mm), with screw holes for concealed anchors.
- Cover is 22-gauge (0.8mm), type 304 stainless steel with satin finish, 3 1⁄4" (85mm) diameter.
- Cover snaps over mounting flange to conceal screws.
- Peened nonslip gripping surface available.
- Optional mounting kits and anchor devices are available.

GRAB BAR BARRIER-FREE WASHROOM GUIDELINES:

Diameter of grab bars should be 1 1⁄4" to 1 1⁄2" (32–38mm) with 1 1⁄2" (38mm) clearance from the wall. Grab bars should not rotate in their fittings. The required mounting height is universally 33" to 36" (840–915mm) from the centerline of the grab bar to the finish floor. The structural strength of all grab bars and their mounting devices should withstand more than 250 pounds of force (1112 N). For all Barrier-Free toilet compartments, individual toilet rooms and guest bathrooms, it is recommended that a 36" (915mm) minimum horizontal grab bar be installed on the back wall over the toilet and a 42" (1065mm) minimum horizontal grab bar be installed on the side wall or partition nearest the toilet. This can also be accomplished with a single horizontal two-wall grab bar.

Stocked Product

1 1⁄4" (32MM) DIA. STRAIGHT/SATIN

B-5806x18" (457mm) P S T
B-5806x24" (610mm)
B-5806x36" (915mm)
B-5806x42" (1065mm)
B-5806x48" (1220mm)
B-25230 SHEET METAL SCREW PK

B293 - Series

FIXED-POSITION TILT MIRRORS

FEATURES

Provide visibility for wheelchair patients. Frame is type 304 stainless steel, satin finish. Beveled edges of frame hug mirror; provides gapless fit for improved appearance, and safety when cleaning mirror. No. 1 quality, 1⁄4" (6mm) glass mirror electrolytically copper plated. Mirror extends 4" (100mm) from wall at top and tapers to 1" (25mm) at bottom.

Stocked Product

B-293 1830 - 18" x 30"

B165 - Series

CHANNEL-FRAME MIRRORS

Stocked Product

B-165 2436 - 24" x 36" S
B-165 1830 - 18" x 30"

FEATURES

• One-piece, roll-formed 3⁄4" x 3⁄4" (19 x 19mm) angle-frame • Type 304 stainless steel angle with satin finish • Corners heliarc welded, ground and polished smooth • Beveled frame edge at mirror for improved appearance • No. 1 quality, 1⁄4" (6mm) glass mirror; warranted against silver spoilage for 15 years • Galvanized steel back • Secured to concealed wall hanger with theft-resistant mounting

Bobrick – *Washroom Accessories*

B221 - Classic Series

SURFACE MOUNTED SEAT-COVER DISPENSER

FEATURES

Satin-finish stainless steel. Dispenses 250 single- or half-fold toilet seat covers. Fills from bottom. Unit 15 3⁄4" W, 11" H, 2" D (400 x 280 x 50mm). Av. Mtg. Ht.: 45–59" (1145–1500mm) to top of unit, Barrier-Free, 30–48" (760–1220mm). Allow 5" (125mm) minimum clearance from bottom of dispenser to top of any horizontal projection for filling dispenser from below unit.

Stocked Product
B-221

B2888 - Classic Series

SURFACE-MOUNTED MULTI-ROLL TOILET TISSUE DISPENSER

FEATURES

Satin-finish stainless steel unit with stainless steel dispensing mechanism. Door has flat face with protruding tumbler lock. Holds two rolls up to 5 1⁄4" (135mm) diameter (1800 sheets). Extra roll automatically drops in place when bottom roll is depleted. Theft-resistant, heavy-duty spindles. Unit 6 1⁄16" W, 11" H, 5 15⁄16" D (155 x 280 x 150mm). Av. Mtg. Ht.: 28–36" (710–915mm) to top of unit; Barrier-Free, 28" (710mm).

Stocked Product
B-2888

B262 - Classic Series

SURFACE-MOUNTED PAPER TOWEL DISPENSER

FEATURES

Satin-finish stainless steel. Dispenses 400 C-fold or 525 multifold towels measuring 3 1⁄8" to 3 13⁄16" (79–97mm) deep without adjustment or adapters. Door has tumbler lock and piano-hinge. Cabinet slots indicate refill time. Unit 10 3⁄4" W, 14" H, 4" D (275 x 355 x 100mm). Av. Mtg. Ht.: 66–70" (1675–1780mm) to top of unit; Barrier-Free, 54" (1370mm).

Stocked Product
B-262

Bobrick – *Washroom Accessories*

B264

SINGLE-ROLL TOILET TISSUE DISPENSER WITH CONTROLLED DELIVERY

Stocked Product
B-264

FEATURES

Heavy-gauge chrome-plated steel with bright polished finish.
Mounting bracket is 18-gauge (1.2mm). Equipped with a vandalresistant self-locking mechanism and two heavy-duty brake springs.
Heavy-duty brake springs provide controlled delivery. Toilet tissue roll will not spin freely. Eliminates waste. Accommodates one standard-core toilet tissue roll up to 4-1/2" (115mm) diameter. Toilet tissue roll cannot be removed from holder until empty.

B265

DOUBLE-ROLL TOILET TISSUE DISPENSER WITH CONTROLLED DELIVERY

Stocked Product
B-265

FEATURES

Heavy-gauge chrome-plated steel with bright polished finish. Mounting bracket is 18-gauge (1.2mm). Equipped with vandalresistant self-locking mechanisms and four heavy-duty brake springs.
Heavy-duty brake springs provide controlled delivery. Toilet tissue rolls will not spin freely. Eliminates waste. Accommodates two standard-core toilet tissue rolls up to 4-1/2" (115mm) diameter. Toilet tissue rolls cannot be removed from holder until empty.

B369 - Classic Series

RECESSED PAPER TOWEL DISPENSER AND WASTE RECEPTACLE

Stocked Product
B-369

FEATURES

Cabinet -18-8 S, type-304, 22-gauge (0.8mm) stainless steel. All-welded construction. Exposed surfaces have satin finish.
Flange -18-8 S, type-304, 22-gauge (0.8mm) stainless steel with satin finish. Drawn and beveled, one-piece, seamless construction.
Door -18-8 S, type-304, 22-gauge (0.8mm) stainless steel with satin finish. Secured to cabinet with a full-length stainless steel piano-hinge. Equipped with a knob latch.
Paper Towel Dispenser -18-8 S, type-304, 22-gauge (0.8mm) stainless steel with satin finish.
Capacity: 350 C-fold or 475 multifold paper towels.
Waste Receptacle -18-8 S, type-304, Heavy-gauge stainless steel with satin finish. Top edges are hemmed for safe handling. Friction catch.
Capacity: 2-gal. (7.6-L).

Bobrick – *Washroom Accessories*

B279 - Classic Series

SURFACE MOUNTED WASTE RECEPTACLE

Stocked Product
B-279
S

FEATURES

Satin-finish stainless steel. Bottom edges hemmed for safety. Hooks hold furnished reusable vinyl liner; removable for servicing. Capacity: 6.4-gal. (24.2-L). Unit 14" W, 18" H, 6" D (355 x 455 x 150mm).

B72974

SURFACE-MOUNTED PLASTIC, AUTOMATIC, UNIVERSAL ROLL TOWEL DISPENSER

Introducing Bobrick's new addition to a complete line of Automatic, Universal Roll Towel Dispensers:

Surface-Mounted Plastic, Automatic Roll Towel Dispenser, Model No. B-72974

The new Surface-Mounted Plastic Automatic Roll Towel Dispenser is a perfect complement to our stainless steel line of dispensers where budget is a concern, yet the building owner wants to maintain a high level of design, function, and flexibility.

Stocked Product
B-72974

FEATURES

- Automatic, hygienic, hands free operation.
- Universal roll towel dispenser offers flexibility and freedom from expensive proprietary paper.
- Dispenses universal, 1-1/2" to 2" diameter core, up to 8" diameter, 8" wide, nonperforated, non-proprietary rolls.
- Four paper saving features allow building owner to control cost of paper towels and comply with US EPA Reduce & Reuse Resource Conservation Initiative
  - Adjustable towel lengths set at 9", 12", or 15"
  - Adjustable time delays on second activation set at 1, 2, or 3 seconds
  - Paper Saver Feature with two optional sheet lengths on second activation: 25% or 12.5% shorter
  - Stub roll dispensing accommodates up to 3-1/2" diameter stub-roll with automatic transfer to full roll
- Extended 300,000-cycle, 1-year battery life with low battery indicator light; AC adapter available.
- Easy access battery compartment located in the front of cabinet.
- Durable beige body made with high-impact resin plastic and a navy translucent cover that allows view of the paper supply.

B3944 - Classic Series

RECESSED CONVERTIBLE PAPER TOWEL DISPENSER/WASTE RECEPTACLE

Stocked Product
B-3944
S

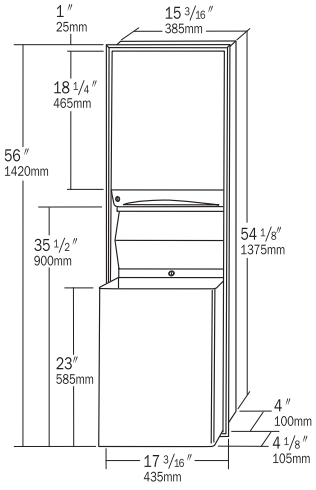

FEATURES

Unit includes convertible folded paper towel module and 12-gallon waste receptacle module which can be interchanged with a universal touch-free roll towel module and 18-gallon waste receptacle module, respectively. Cabinet is not replaced when changing modules. Satin-finish stainless steel. Seamless beveled flange. Dispenses 600 C-fold or 800 multifold towels. Removable waste receptacle is locked into cabinet. Receptacle is 8" (205mm) deep with capacity of 12-gal. (45.4-L); extends 4 1⁄8" (105mm) from wall. Rough Wall Opening: 16" W, 54 3⁄4" H, 4" min. depth (405 x 1390 x 100mm). Av. Mtg. Ht.: 67–74" to top of unit; Barrier-Free, 601/2".

Bobrick – *Washroom Accessories*

B822 - Series

SOAP DISPENSERS

Stocked Product
B-822
P S T

FEATURES

For ease of maintenance and labor savings • Vandal-resistant locking cover and free-turning spout • Corrosion-resistant • Bright-polished spout, cover and escutcheon • High-impact-resistant ABS body and shank • Shatter-resistant polyethylene container • Patented • 34 fl. oz. capacity, 4” spout

B2112 - Classic Series

SURFACE MOUNTED SOAP DISPENSER

Stocked Product
B-2112
S T

FEATURES

Horizontal tank is satin-finish stainless steel. Valve dispenses all-purpose hand soaps. Capacity: 40-fl oz (1.2-L). Soap refill window. Concealed wall fastening. Hinged filler-top requires special key to open. Vandal-resistant. Unit 8 1⁄8” W, 4 3⁄4” H (205 x 120mm); wall to pushbutton, 3 1⁄2” (90mm). Universal/Barrier-Free Mtg. Ht.: 47 1⁄2” (1205mm) to top of unit with pushbutton 44” (1120mm) above floor. Patented.

B2111 - Classic Series

SURFACE MOUNTED SOAP DISPENSER

Stocked Product
B-2111
S

FEATURES

Vertical tank is satin-finish stainless steel. Valve dispenses all-purpose hand soaps. Capacity: 40-fl oz (1.2-L). Soap refill window. Concealed wall fastening. Hinged filler-top requires special key to open. Vandal-resistant. Unit 4 3⁄4” W, 8 1⁄8” H (120 x 205mm); wall to pushbutton, 3 1⁄2” (90mm). Universal/Barrier-Free Mtg. Ht.: 50 7⁄8” (1290mm) to top of unit with pushbutton 44” (1120mm) above floor. Patented.

B4112 Contura Series

SURFACE MOUNTED SOAP DISPENSER

FEATURES

Corrosion-resistant valve dispenses commercially [illegible] purpose hand soaps. Container is satin-finish [illegible] steel. Capacity: 40-fl oz (1.2-[illegible] Soap refill window. Concealed wall fastening. Hinged filler-top [illegible] key to open. Vandal-resistant. Unit 7” W, 6 1⁄8” H (180 x 155[illegible] wall to push-button, 3 5⁄16[illegible] Universal/Barrier-Free Mtg. Ht.: 49” (1245mm) to top of unit with push-button 44” (1120mm) above floor.

DISCONTINUED
Call for availability and special pricing

Stocked Product
B-4112

Bobrick – *Washroom Accessories*

B7120 - Series

SURFACE-MOUNTED HAND DRYER

Stocked Product
B-7120

FEATURES

Surface-Mounted Warm-Air Hand Dryers featuring a 4" projection for ADA and barrier-free compliance and low-profile, architectural styling. 70% recycled satin-finish stainless steel (B-7128) or white-coated steel (B-7120) covers with black trim and side panels are available. Features include an optimum balance of fast drying time and a moderate sound level (73 dBA). Dual parallax air flow delivers a broad warm air pattern for a comfortable hand dry. Paper towels are eliminated reducing costs by 95%, operation is energy-efficient. Motor and brushes are warranted for 3 years, all other parts for 10 years.

B4369 - Contura Series

RECESSED PAPER TOWEL DISPENSER/WASTE RECEPTACLE

Stocked Product
B-4369

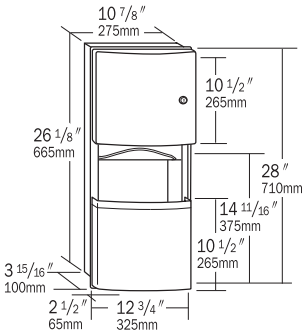

FEATURES

Satin-finish stainless steel. Flush tumbler lock. Dispenses 350 C-fold or 475 multifold towels. Waste receptacle has 2.6-gal. (9.8-L) capacity; extends 2 1⁄2" (65mm) from wall. Removable front panel for easy cleaning. Rough Wall Opening: 11 3⁄8" W, 26 5⁄8" H, 4" min. depth (290 x 675 x 100mm). Av. Mtg. Ht.: 71" (1805mm) to top of unit; Barrier-Free, 52 3⁄4" (1340mm).

B43644 - Contura Series

RECESSED WASTE RECEPTACLE

Stocked Product
B-43644

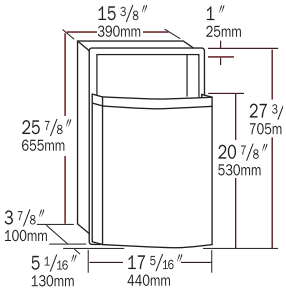

FEATURES

Satin-finish stainless steel. Removable front panel for easy cleaning. Capacity: 11.2-gal. (42.2-L). Rough Wall Opening: 15 7⁄8" W, 26 1⁄4" H, 4" min. depth (405 x 665 x 100mm). Universal/Barrier-Free Mtg. Ht.: 43–47" (1090–1195mm) to top of unit.

B4288 - Contura Series

SURFACE MOUNTED MULTI-ROLL TOILET TISSUE DISPENSER

Stocked Product
B-4288

FEATURES

Satin-finish stainless steel unit with stainless steel dispensing mechanism. Flush tumbler lock. Holds two rolls up to 5 1⁄4" (135mm) diameter (1800 sheets). Extra roll automatically drops in place when bottom roll is depleted. Theft-resistant, heavy-duty spindles. Unit 6 1⁄16" W, 11" H, 5 15⁄16" D (155 x 280 x 150mm). Av. Mtg. Ht.: 28–36" (710–915mm) to top of unit; Barrier-Free, 28" (710mm).

Bobrick – *Washroom Accessories*

B4262 - Contura Series

SURFACE-MOUNTED PAPER TOWEL DISPENSER

Stocked Product
B-4262

FEATURES

Satin-finish stainless steel. Tumbler lock on top of cabinet. Door swings down for loading towels. Dispenses 400 C-fold or 525 multifold towels measuring 3 1⁄8" to 3 13⁄16" (79–97mm) deep without adjustment or adapter. Furnished with internal towel tray adapter kit for dispensing narrower towels 2 1⁄2" to 3 1⁄8" (64–79mm) deep. Cabinet slots indicate refill time. Unit 10 13⁄16" W, 13 1⁄4" H, 4 11⁄16" D (275 x 335 x 120mm).

B4221 - Contura Series

SURFACE MOUNTED SEAT-COVER DISPENSER

Stocked Product
B-4221

FEATURES

Satin-finish stainless steel. Dispenses 250 single- or half-fold toilet seat covers. Fills from bottom. Unit 15 3⁄4" W, 11 1⁄4" H, 2 1⁄16" D (400 x 285 x 55mm). Av. Mtg. Ht.: 45–59" (1145–1500mm) to top of unit, Barrier-Free, 30–48" (760–1220mm). Allow 5" (125mm) minimum clearance from bottom of dispenser to top of any horizontal projection for filling dispenser from below unit.

B270 - Contura Series

SURFACE MOUNTED SANITARY NAPKIN DISPOSAL

Stocked Product
B-270

FEATURES

Satin-finish stainless steel. Cover is drawn, one-piece construction; secured to cabinet with full-length stainless steel piano-hinge. Capacity: 1.0-gal. (3.8-L). Unit 7 1⁄2" W, 10" H, 3 13⁄16" D (190 x 255 x 95mm). Universal/Barrier-Free Mtg. Ht.: 25–30" (635–760mm) to top of unit.

Bommer – *Hinges & Pivots*

3029 ANSI K81041 Double Action Spring Hinge

Features:

- Door flange is mortise into edge of door
- Jamb flange is surface applied to jamb
- Mortised
- Steel material
- Non templated
- Non handed
- All wood screws
- Do not use on doors with hinge edge beveled

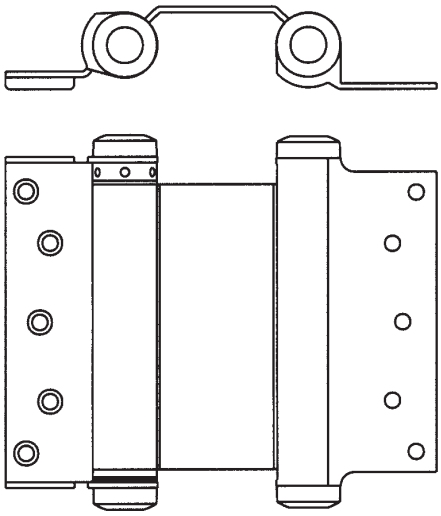

Stocked Product

Sizes:		Door Thicknes:
3029 - 5”	16 per case	1 1/8” - 1 1/2”
3029 - 6”	12 per case	1 1/4” - 1 3/4”
3029 - 8”	6 per case	1 1/2” - 2”
3029 - 6” x 4.5”	12 per case	1 3/4”only

Finishes:
US15 (646), US26D (652), US4 (633), USP (600)

3029-5

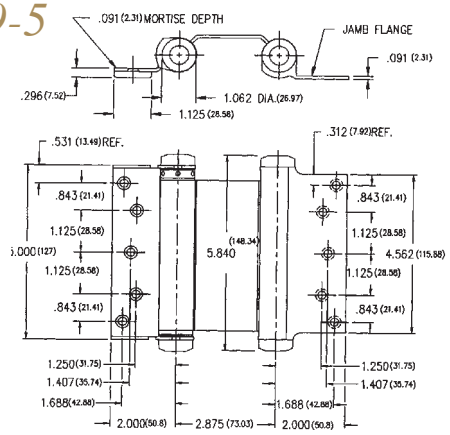

3029-6

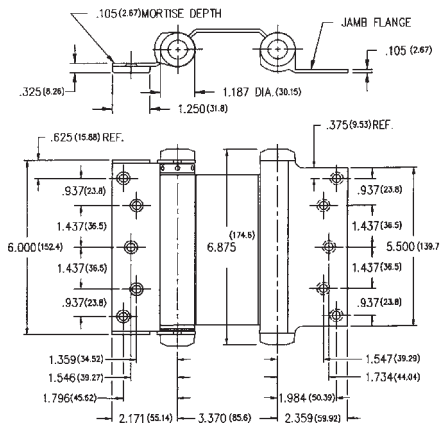

3029-6 x 4.5

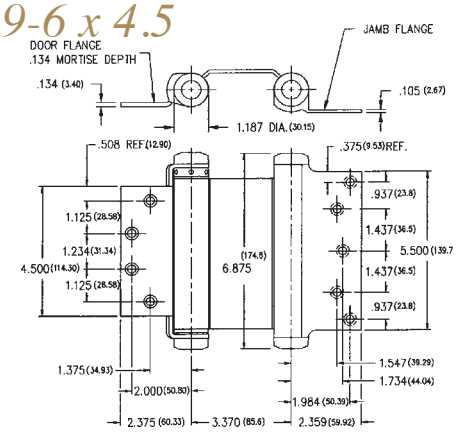

3029-8

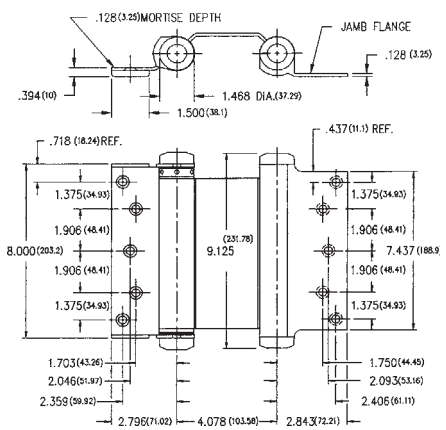

Bommer – *Hinges & Pivots*

LB4311 Single Acting Grade 1 Spring Hinge

Features:

- LB for lube bearing
- Non handed - steel material
- UL listed Grade 1, BHMA certified
- Easily adjustable spring tension for 1 million cycle
- Templated screw hole pattern
- Meets ANSI A156 17
- Pivot point aligns with residential Butt hinges from .085 to .109 gauge
- UL rated for openings up to 3 hour A label
- 4" size .096 gauge

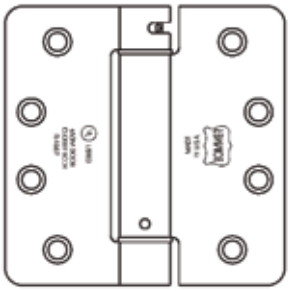

LB4311 1/4" RADIUS

		WOOD SCREWS			MACHINE	CASE
LB4311	4"	packed 8 ea	#12 x 1-1/4"	8 ea	#12-24 x 1/2"	40

Stocked Product
Finishes:
US10B (640), US15 (646), US26D (652), US3 (632), US4 (633)

7112 Surface Pivot

Features:

- ANSI K63201
- Cast steel base
- Double acting, ball bearing
- Non handed
- Adjustable Spring Tension
- 8 pivots per case
- 75 pound max load

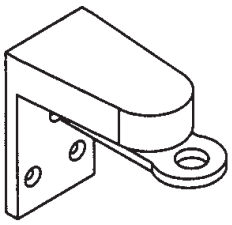

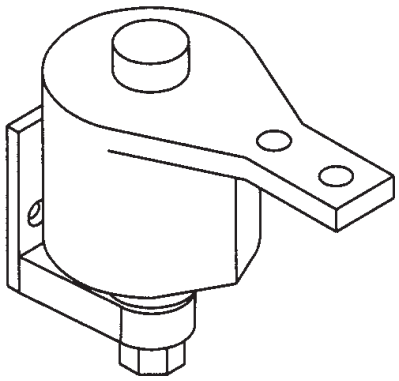

Includes:	QTY	Description
	1	Pivot
	1	Jamb & door bracket
	1	7890 top pivot assembly with bracket
	8	#12 x 1-1/4" flat head wood screws
	2	#10 x 1" flat head wood screws

Stocked Product
Finishes:
US26D (652) and USP (600)

Bommer – *Hinges & Pivots*

7811 & 7813HD Spring Pivots Horizontal Type

Features:

- Floor plate
- Ball bearing
- Door thickness 1-3/8" to 1-3/4"
- Double acting
- Steel mechanism with steel trim
- Hold open at 85° to 90° - 7811 model only
- Adjustable spring tension
- Non handed
- Packed with wood screws 8 per case
- Includes 7890 top pivot

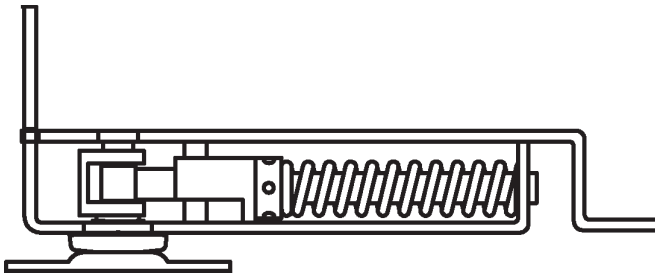

7811 Maximum door weight 90 lbs; 3' door width hold open
7813HD Maximum door weight 150 lbs; 3' door width non hold open

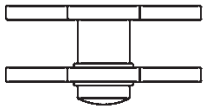

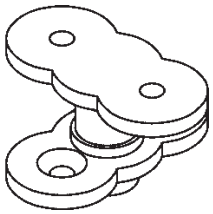

7890 TOP PIVOT INCLUDED IN PRICE

7805 Jamb Bracket

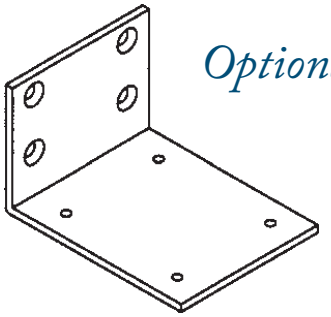

Optional Extra

Stocked Product

Item	Finish
7811	US10B (640), US15 (646), US4 (633) US26 (651), US3 (632)
7813HD	US10B (640), US15 (646), US4 (633) US26 (651), US3 (632)
7805	US10B (640), US15 (646), US4 (633) US26 (651), US3 (632)

Calibre - Overhead Concealed Closers

CA2200 OHC Series

Product Description & Features

Underwriters' Laboratories Inc. Listed for units without hold open feature. UL10C for positive pressure and certified to conform to UBC 7.2 (1997) BS476 for Fire Safety.

Center Hung Door Application :
Double or Single Acting (applied door stop renders unit Single Acting). Adjustable 'S' type side loading or 'A' type and 'K' type end loading arms are available for center pivoted door applications.

Offset Hung Door Application :
Single Acting Offset 'JO' and 'VO' type top arms are available for butt hung or offset pivoted applications.

'S' type side loading top arm, CA3010-DP adjustable dual purpose pivot set, and the CA3010-FS anchor set will be furnished unless otherwise specified by the customer. 'A' type or 'K' type end loading, and 'JO' or 'VO' type offset arms are optional, but must be specified. Sold Separately.

Offset Hung Doors : Complete units for offset pivoted or butt hung aluminum doors and frames are furnished with a 'JO' or 'VO' type offset arm and CA3010-FS anchor set with all fasteners. (Offset pivots or butt hinges not included. Note: Top Door Stop / Arm Cover by others)

DOOR CLOSER FUNCTIONS

- Built-in positive Back Stop and Hold-Open positions are available:
- 105° Back Stop with Hold-Open
- 105° Back Stop -no Hold-Open
- 90° Back Stop with Hold-Open
- 90° Back Stop -no Hold-Open
- Handicap (ADA) spring tensions available for use on center pivoted door applications :
  8.5 lb. Opening Force (Center Hung door)
- Standard Fixed spring tensions available:
  Medium
  Dual Speed Control Valves :
  Closing and Latching speeds controlled by separate regulating valves, fully adjustable after installation.
- Adjustable CA3010-DP dual purpose radial ball-bearing bottom pivot set is provided for floor or threshold mounted (Side or End Loading) center pivoted installation. CA3010-GE bottom pivot sets are optional,and must be ordered separately.
- Universal application. Non-handed for left or right door application.
- Installs in an aluminum storefront header or transom as small as 1-3/4" x 4"
- Positive cam centering for alignment and to hold door closed against normal wind or draft conditions.
- Stable hydraulic door check fluid for any climatic operation and provides constant lubrication.

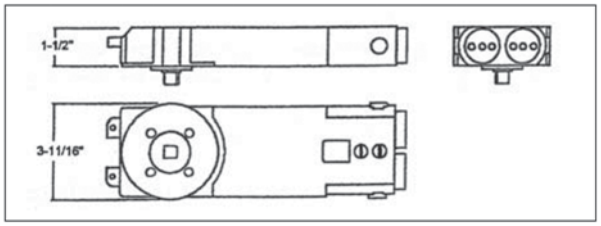

Stocked Product

Part #	Description
2230	105° Back Stop with Hold-Open
2231	105° Back Stop -no Hold-Open
2232	90° Back Stop with Hold-Open
2233	90° Back Stop -no Hold-Open

Calibre - Overhead Concealed Closers

CA3300 OHC Series

Product Description & Features

- Handicap (ADA) multi-sized closers with adjustable spring power for a range of sizes after installation.
- Underwriters' Laboratories Inc. Listed for units without hold open feature. UL10C for positive pressure and certified to conform to UBC 7.2 (1997) BS476 for Fire Safety.
- Center Hung Door Application :
  Double or Single Acting (applied door stop renders unit Single Acting). Adjustable 'S' type side loading or 'A' type and 'K' type end loading arms are available for center pivoted door applications.
- Offset Hung Door Application:
  Single Acting Offset 'JO' and 'VO' type top arms are available for butt hung or offset pivoted applications.
  Note : Offset arm application geometry increases the effective spring tension in some instances thereby possibly exceeding the 5 lb. and 8-1/2 lb. Opening Force requirements.

DOOR CLOSER FUNCTIONS

- Built-in positive Back Stop and Hold-Open positions. are available :
  Models CA3310, CA3311, CA3312, CA3313
  105° Back Stop with Hold-Open
  105° Back Stop -no Hold-Open
  90° Back Stop with Hold-Open
  90° Back Stop -no Hold-Open
- Dual Speed Control Valves :
  Closing and Latching speeds controlled by separate regulating valves, fully adjustable after installation.
- Adjustable CA3010-DP dual purpose radial ball-bearing bottom pivot set is provided for floor or threshold mounted (Side or End Loading) center pivoted installation.
  CA3010-GE bottom pivot sets are optional,
  and must be ordered separately.
- Universal application. Non-handed for left or right door application.
- Installs in an aluminum storefront header or transom as small as 1-3/4" x 4"
- Positive cam centering for alignment and to hold door closed against normal wind or draft conditions.
- Stable hydraulic door check fluid for any climatic operation and provides constant lubrication.

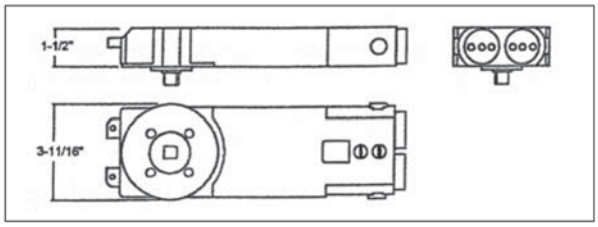

'S' type side loading top arm, CA3010-DP adjustable dual purpose pivot set, and the CA3010-FS anchor set will be furnished unless otherwise specified by the customer. 'A' type or 'K' type end loading, and 'JO' or 'VO' type offset arms are optional, but must be specified.

Offset Hung Doors : Complete units for offset pivoted or butt hung aluminum doors and frames are furnished with a 'JO' or 'VO' type offset arm and CA3010-FS anchor set with all fasteners. (Offset pivots or butt hinges not included. Note: Top Door Stop / Arm Cover by others).

Stocked Product

Part #	Description
3310	105° Back Stop with Hold-Open
3311	105° Back Stop -no Hold-Open
3312	90° Back Stop with Hold-Open
3313	90° Back Stop -no Hold-Open

Calibre

CA2200 & CA3300 SERIES PARTS and ACCESSORIES

Stocked Product

	CA3010-S	"S" Type Side Loading Top Arm Assembly (1/2" Depth Top Rail)
	CA3010-A	"A" Type End Loading Top Arm Assembly (1" Depth Top Rail)
	CA3010-K	"K" Type End Loading Top Arm Assembly (5/8" Depth Top Rail)
	CA3010-JO	"JO" Type Offset Top Arm Assembly (Mortised Type, Cut down into 9/16" Depth Top Rail)
	CA3020-VO	"VO" Type Offset Top Arm Assembly (Surface Type, Requires 7/8" Depth Top Rail)
	CA3010-FS	Anchor Set (Standard - for Snap together Header)
	CA3010-DP	Adjustable Dual Purpose Bottom Pivot Set (Standard)
	CA3010-GE	Adjustable Threshold Mount Bottom Pivot Set (Optional)

Calibre - Storefront Locks

LS-1000 & LS-2000

Product Description & Features

- Precision die cast A380 aluminum alloy is used for aluminum hardware castings.
- Quality, homogenized steel used for all steel stampings for all locks, and security hardware product.
- All machining is performed with state of the art equipment for precision and uniformity throughout all phases of production.
- All painted surfaces are either baked enamel, or powder coating (depending on the product) for durability and long lasting finishes.
- Bolts made of 5-ply laminated steel with a hardened roller pin inserted in a case hardened center ply for maximum security.
- Locks use standard 1-5/32" Mortise Key or Thumbturn Cylinders with AR MS-Type cam.

Long Throw Hook Bolt

Stocked Product

Part #	Description	Finish
LS-1000	Long Throw Deadlock only (throw 1-3/8")	
LS-2000	Hook Bolt Deadlock only (throw 1-3/16")	
LS-1001	Long Throw Deadlock w/ faceplate	AL, DU
LS-2001	Hook Bolt Deadlock w/ faceplate	AL, DU

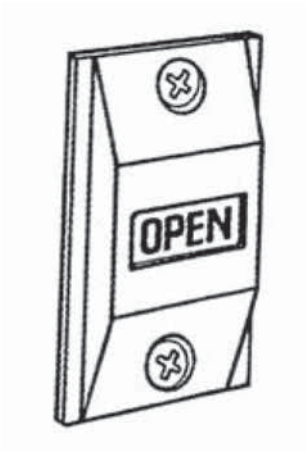

LO-1000 - Standard Lock Indicator Set

Product Description & Features

- Designed for use with the LS-1000, LS-2000 and LS-3000 type Deadlocks.
- "OPEN" in green and "LOCKED" in red letters on a white background.
- Includes the adhesive backed SI-2000 Header Sign "THESE DOORS TO REMAIN UNLOCKED WHENEVER THE BUILDING IS OCCUPIED".
- Includes all installation hardware (screws and pins).

Stocked Product

Part #	Finish
LO-1000	AL, DU

LS-4000 - Deadlatch Lock

Product Description & Features

- Cylinder backsets available: 1-1/8" Latchbolt has 1/2" throw, and is chrome plated with a Delrin insert for quiet latching.
- Locks use standard 1-5/32" Mortise Key or Thumbturn Cylinders with AR MS-Type cam.
- Deadlatch Lock provides key controlled dogging.
- Standard ST-5000 Strike included (US 26D finish).

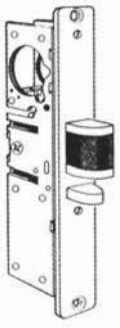

Deadlatch Lock (LH Shown)

Stocked Product

Part #	Finish	Handing
LS-4000	AL, DU	RH, LH
LS-4001 w/Faceplate	AL, DU	RH, LH

Calibre

Lock Faceplates

Product Description & Features

Faceplates measure 1" x 6-7/8", are ordered separately, and include faceplate screws.

Stocked Product

For Use With the following Locks:		Flat	Radius Weatherstripped
LS-1000	Long Throw	FA-1001 AL, DU	FA-1003 AL, DU
LS-2000	Hook Bolt	FA-2001 AL, DU	FA-2003 AL, DU
LS-3000	Short Throw		
LS-4000	Deadlatch Lock	FA-4001 AL, DU	

Cylinders

- Zinc Die Cast cylinders, with core faces, keys, and thumbturn T-Turn US 26D. Cylinder faces (scalps) anodized aluminum.
- Mortise Key Cylinder and Mortise Thumbturn with AR MS Type cam.
- Mortise Key Cylinder with Schlage "C" Keyway. Specify cylinder pairs as KA-2 or KA (keyed alike in maximum of 50 pairs each).
- Standard 3/16" cylinder trim ring furnished.
- Finishes available:
  AL - Anodized Satin Aluminum
  DU - Anodized Storefront Bronze

Mortise Key Cylinder

Mortise Dummy Cylinder

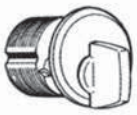

Mortise Thumbturn Cylinder

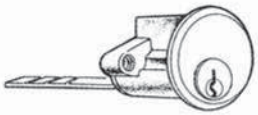

Rim Cylinder

Stocked Product

Part #	Description	Finish
CL-1000	Mortise Key Cylinder	AL, DU
DM-1000	Mortise Dummy Cylinder	AL, DU
TH-1000	Mortise Thumbturn Cylinder	AL, DU
RM-1000	Rim Cylinder	AL, DU

Calibre - Pivots

Offset Pivot Sets

Product Description & Features

- A380 aluminum alloy precision die cast pivot portions.
- Oilite bronze bushing in top frame pivot portion.
- Case hardened, spring loaded pin in Top Door pivot portion.
- Case hardened pivot stud in Floor/Jamb pivot portion.
- Full race ball bearing in Bottom Door Pivot portion.
- Steel reinforcement plates for door portions provided with PV-5000.
- Floor/Jamb portion with 1/8" vertical height adjustment.
- Finishes available:

Stocked Product

Part #	Description	Handing	Finish
PV-3000	For use on Flush Doors	RH,LH	AL, BK, DU
PV-4000	For use on Flush Doors	RH,LH	AL, BK, DU
PV-6000	For use on 7/64" Recessed Doors	RH,LH	AL, DU
PV-7000	For use on 1/8" Recessed Doors	RH,LH	AL, BK, DU

(Kawneer 50-300 Type) (includes Door Reinforcement Plates)

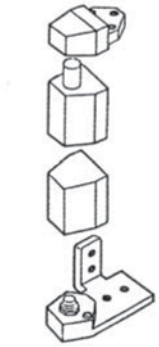

PV-3001
(LH Flush Door)
J-30 Type

PV-3002
(RH Flush Door)
J-30 Type
(RH Shown)

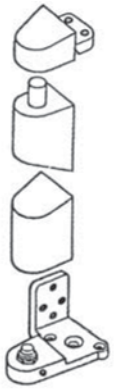

PV-4001
(LH Flush Door)
J-34 Type

PV-4002
(RH Flush Door)
J-34 Type
(RH Shown)

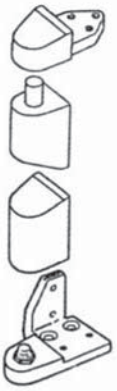

PV-6001
(LH 7/64" Recess)
J-40 Type

PV-6002
(RH 7/64" Recess)
J-40 Type
(RH Shown)

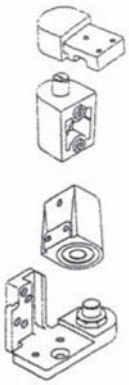

PV-7001
(LH 1/8" Recess)
Kawneer Type

PV-7002
(RH 1/8" Recess)
Kawneer Type
(LH Shown)

Intermediate Pivot Sets

Product Description & Features

- Full race ball bearing backed by an oilite bronze bushing in the Door Portion.
- Case hardened steel pin in Jamb Portion, fully retractable for ease of installation and easy vertical adjustment.
- IN-8000 - Precision A380 aluminum die cast.
- IN-9000 - Precision aluminum extrusion, or die cast.
- Standard Baked Enamel Finishes available:

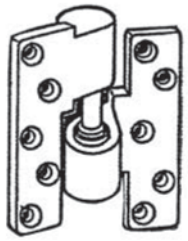

IN-8000

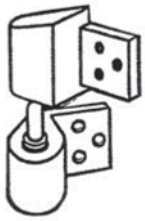

IN-9000

Stocked Product

Part #	Description	Finish
IN-8001	Mortise Type (LEFT Hand)	AL, BK, DU
IN-8002	Mortise Type (RIGHT Hand)	AL, BK, DU
IN-9001	Slotted Type (LEFT Hand)	AL, BK, DU
IN-9002	Slotted Type (RIGHT Hand)	AL, BK, DU

Calibre - Retro Pivot Sets

NDC-100 Kit

Product Description & Features

C/H Floor Check Conversion

- Retrofit Kit for center-hung concealed Floor Checks of the Rixon, Doromatic, and Pittco type.

NDC-101 Kit

Product Description & Features

Floor Check Conversion

- Retrofit Kit for 3/4” offset Floor Checks of the Rixon, Doromatic, and Pittco type.
- Handed Kit: Specify for Left Hand, or Right Hand door.

NDC-102EL

Product Description & Features

OHC Closer End Load Conversion

- Retrofit Kit for End Load top arm configured Overhead Concealed door closers as Kawneer Husky (Shot Gun Barrel type & the Husky II), Jackson, International, and Dorma.

NDC-102SL

Product Description & Features

OHC Closer Side Load Conversion

- Retrofit Kit for Side Loading arm configured Overhead Concealed door closers as Kawneer Husky II, Jackson, and Dorma.
- Handed Kit: Specify for use with Left Hand, or Right Hand door (to keep clamp bar inside the building for security).

Stocked Product

Part #	Handing
NDC-100 Kit	
NDC-101 Kit	RH, LH
NDC-102EL	
NDC-102SL	RH, LH

Calibre

Cylinder Guard Set

- Security Ring is made from Hardened Steel.
- For use with Standard Face 5 pin Mortise Cylinder that fits into a free-spinning beveled collar.
- GU-1000 furnished with retaining clip and 2 spacers. High security with Security Ring fastened from inside of the door stile.

Stocked Product

Part #	Description	Finish
GU-1000	Cylinder Guard Set (w/ Retaining Clip)	AL, DU

Paddle Handle Sets

- For use with LS-4000 Deadlatch Lock. Includes field reversible Cam Plug.
- Complete unit is field reversible for either PUSH or PULL function, and for opposite handing with both PUSH and PULL Plates included.
- Extruded, anodized Aluminum paddle plate for long lasting wear and use.

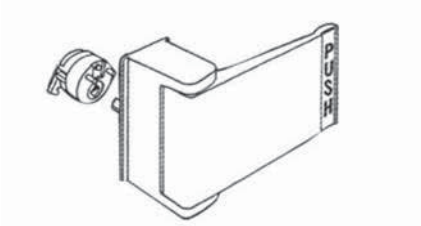

Stocked Product

Part #	Description	Finish
PA-1000	Paddle Handle Set (Push to the LEFT)	AL, DU
PA-2000	Paddle Handle Set (Push to the RIGHT)	AL, DU

Camden – *Key Switches*

CM1120 - Flush Mount Key Switch 1 SPDT Momentary
CM1130 - Flush Mount Key Switch 1 SPDT Maintained

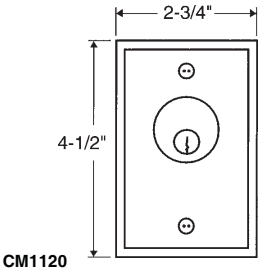

CM1120
Overall Dimension

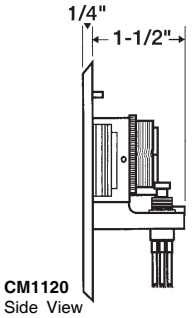

CM1120
Side View

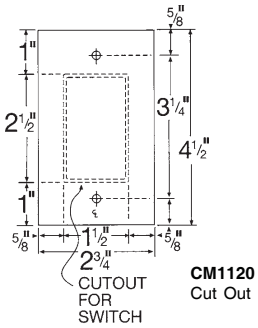

CM1120
Cut Out

CM2020 - Narrow Style Key Switch 1 SPDT Momentary
CM2030 - Narrow Style Key Switch 1 SPDT Maintained

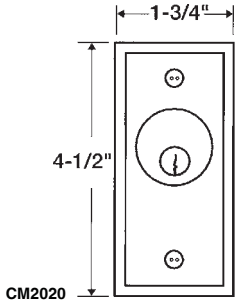

CM2020
Overall Dimension

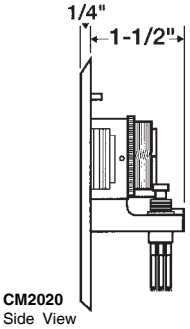

CM2020
Side View

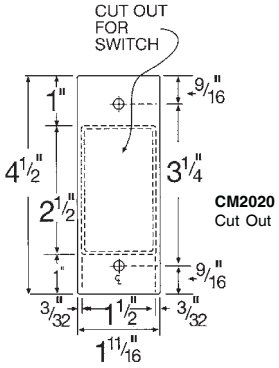

CM2020
Cut Out

Features:

Keyswitches are supplied with aluminum face plate, cylinder locking ring,
2 socket / slotted screws, 2 tamper proof screws.
CM2020 supplied with rubber gasket. Designed to use 1", 1-1/8", or 1-1/4" mortise cylinders.
MORTISE CYLINDER NOT SUPPLIED

Stocked Product

CM1120 - SPDT Momentary, Aluminum Finish
CM2020 - Narrow SPDT Momentary, Aluminum Finish
CM1130 - SPDT Maintained, Aluminum Finish
CM2030 - Narrow SPDT Maintained, Aluminum Finish

Camden

CM30 - Series Illuminated Key Switches

Features:

- SPDT Momentary
- EE option with 30 Second Integrated Timer

CM30 illuminated exit switches come with 2" square button (green or blue) mounted on a single gang stainless steel face plate, 2 socket / slotted screws and 2 tamper proof screws.

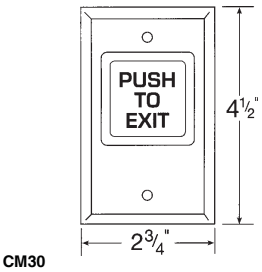

CM30
Overall Dimension

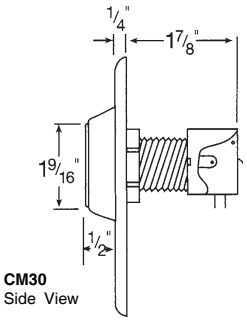

CM30
Side View

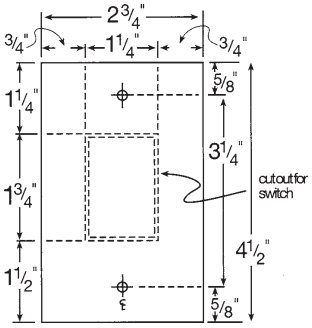

CM30
Cut Out

Stocked Product
CM30E - Green '"Push To Exit"

CM830 - Remote Door Release Switch

Features:

- SPDT momentary version
- 20A @ 125/250 VAC
- Surface mounted
- Ideal for desk mounting in reception area

Stocked Product
CM830 - Rocker Switch, Black

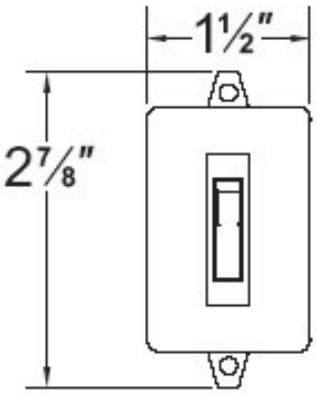

Camden

All Active Switches

CM40 - 4 -1/2" Round
CM41 - 4-1/2" Round with Square back plate
CM45 - 4-1/2" Square
CM60 - 6" Round

CM40

CM41

CM45

CM60

Stocked Product
CM40-4 - 4-1/2" Round Handicap / Push to Open

CM41-4 - 4-1/2" Round Handicap
with Square Back Plate / Push to Open

CM45-4 - 4-1/2" Square Handicap / Push to Open

CM60-2 - 6" Round Handicap
CM60-3 - 6" Round Handicap / Push to Open, Black

Stand Alone Digital Keypad

Features:
- Weather proof and vandal proof
- Heavy duty indoor and outdoor application
- Used with access control devices
- EE prom Memory
- Lifetime warranty
- Voltage 12VAC, 12-24 VDC
- CM 626- 200 users

Specifications:
Input voltage ..... 12 Volt or 24 Volt AC/DC
Dimension ..... 4-1/2" H x 2-3/4" W x 7/8" D
Maximum users 120
Single gang mounted
Keypad programming

Stocked Product
CM626S - Surface Mount

Accessories

PTSS Series

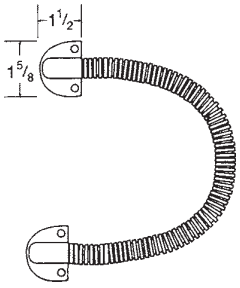

Heavy duty armoured
power transfer cable

Stocked Product
CMPTSS - 7", 12" and 18"

Camden

Magnetic Locks CS91 Series

CX 91S-06 - 600 Lbs Surface Mounted Single Door

- 9-7/8" x 1-7/8" x 1"
- 500mA @ 12V
  250mA @ 24V
- UL Listed

CX 1001
Adjustable L bracket
for 1200 lb magnets

CX 1011
Adjustable L bracket
for 600 lb magnets

CX 91S-12 - 1200 Lbs Surface Mounted Single Door

- 10-1/2" x 2-7/8" x 1-9/16"
- 500mA @ 12V
  250mA @ 24V
- UL Listed

Stocked Product
CX91S-6 - 600 llbs Magnetic Lock
CX91S-12 - 1200 lbs Magnetic Lock
CX1001 - Adjustable Brackets F/1200 lbs
CX1003 - Angle Bracket

Access Control

CV 32H Kit

- Online distributed processing system up to 64 doors
- Includes control panel with software, power supply, plug in transformer, 2 HID mullion proximity readers, 10 cards

CM419W Request to Exit Sensor

- Passive infra-red sensor
- Dual pyros for increased stability
- Ceiling, wall or frame mount
- Adjustable coverage for single or double door
- Adjustable - .25 to 60 second timer
- 12-24 V AC/DC
- Fail safe or fail secure operation

Stocked Product
CV32H Kit
CM419W Sensor

Camden

RF Controls

CM-RX-7

- One million unique transmitter codes pre-programmed at factory
- Auto-learn receivers accept from 10 to 480 codes
- 1, 2, 3, 4, or 5 channel handheld transmitters
- Fullsize or key chain formats
- Wireless keypad models
- Exclusive wall switch ready transmitter
- 5 Wire receiver with form c relay output
- IRM option for TX-7 & TX-8 improves accuracy of transmission

RX/TX Series transmitters and receivers are ideal for varied commercial and handicap applications. Wireless operation eliminates the need to run wiring to the key switch or push button. Digital technology provides maximum range. Camden has full size and key chain transmitters, as well as wall-switch-ready and keypad models. Our receiver features the latest "push and learn" technology, and form C relay output. Camden exclusives include transmitter with Instant Response Module (pulse extender) and receivers with adjustable time delays.

CM-RFP-404

INCLUDES THE FOLLOWING

2-EA CM49
2-EA CM-TX-7IRM
1-EA CM-RX-7

Stocked Product

CMTX-1 - Hand Hold, One Channel
CMTX-1M - Key Chain, One Channel
CMTX-2 - Hand Hold, Two Channel
CM-RFP404 Kit
CM-RX-7 Receiver
CM-RX-7TD One Channel Receiver, 30 Second Adjustable Timer

Columbia – *Saddle Thresholds*

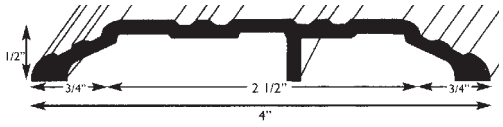

276
2760 **Aluminum**
2769 **Bronze**

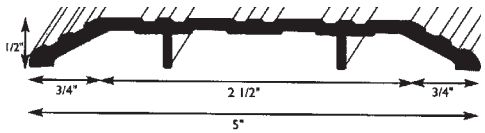

278
2780 **Aluminum**
2789 **Bronze**

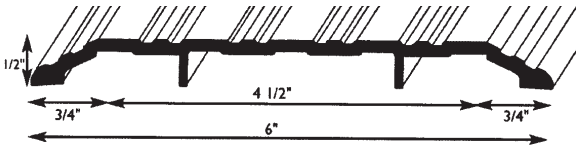

279
2790 **Aluminum**

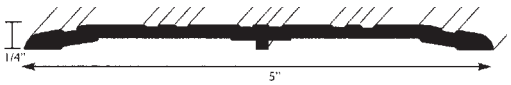

280
2800 **Aluminum**
2809 **Bronze**

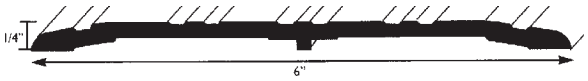

281
2810 **Aluminum**
2819 **Bronze**

282
2820 **Aluminum**
2829 **Bronze**

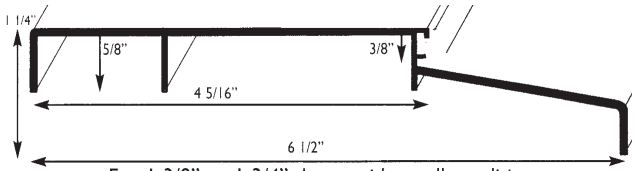

For 1 3/8" or 1 3/4" doors wider wall conditions.

298 **Residential Outswing Sills**
2980 **Aluminum**
2989 **Bronze**

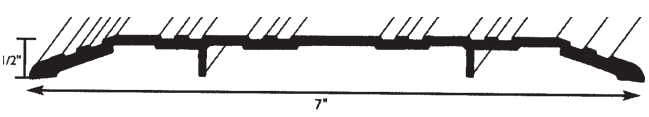

490
4900 **Aluminum**

Stocked Product

Sizes Aluminum:
276 Series - 36", 48", 72"
278 Series - 36", 48", 72"
279 Series - 36"
280 Series - 36", 48", 72"
281 Series - 36", 72"
282 Series - 36"
298 Series - 36"
490 Series - 36", 72"

Sizes Bronze:
276 Series - 36", 72"
278 Series - 36", 48", 72"
280 Series - 36"
281 Series - 48"
282 Series - 36"
298 Series - 36", 72"

Command Access Technologies

Electrified Mortise Lock

ML9080EU **Modified Schlage Chassis 24 VAC/DC - Fail Secure**
ML9080EL **Modified Schlage Chassis 24 VAC/DC - Fail Safe**

Features:
- 12V and 24V Models Available
- Current Draw: 12V – 600 MA, 24V – 300 MA
- Built in Rectifier for AC or DC operation
- Optional REX (request to exit) switch available
- 3 Year warranty

Stocked Product:
ML9080 EU 24V
ML9080 EL 12V and 24V
ML9080 EU 24V with REX switch

Electrified Cylindrical Locks

ND80PEU **Modified Schlage ND Lock - 24 VAC/DC - Fail Secure**
ND80PEL **Modified Schlage ND Lock - 24 VAC/DC - Fail Safe**

Features:
- 24V Models
- Current draw 12V – 600 MA, 24V – 300 MA
- Optional REX (request to exit available/special order)
- 3 Year warranty

Options / Special Orders
- Sparta Design
- REX Switch

Stocked Product
- Finishes 613, 625, 626
- Design Schlage Rhodes
- ND80 12V EL (fail safe)
- ND80 24V EU (fail secure)
- ND80 24V EL (fail safe)

Notes:
- Available in all Schlage Designs and Finishes
- Current Draw 300mA @ 24V

Command Access Technologies

Electrified Exit Device Trim

Features:

- Modified Von Duprin 996L
- Continuous duty solenoid
- 12 Volts & 24 Volts Models AC or DC available
- Current draw 300mA @ 24V / 580mA @ 12V
- Handed
- **Less Rim Cylinder**

Stocked Product

- EU (fail secure) 24VDC, 26D Finish

Energy Transfer / Monitor Hinges

Features:

- 3 Year warranty
- 4' Leads on all hinges
- ETH x 2 WH – 2 wire 18 gauge 5 amps (16 amp in rush for 300 MS)
- ETH x 4 W – 4 wire 26 gauge 1.0 amp (per pair)
- ETH x 8 W – 8 wire 28 gauge
- Center located wire access holes for easy installation (5 Knuckle)
- All hinges are Hager brand
- UL - 60 LK Flexible connection all hinges
- Transfer pivot – 2 wire

Notes:

- 2 wire hinges come with 18 gauge wire for use with high current exit device
- All hinges are Hager unless specified other
- All hinges come with a 4' lead for quick install

Stocked Product

- ETH 2 wire, 4.5 x 4.5 613, 625, 626 finishes
- ETH 4 wire, 4.5 x 4.5 613, 625, 626 finishes
- ETH 8 wire, 4.5 x 4.5 613, 625, 626 finishes

Accessories

PM200

- Voltage range: 22 to 30 VDC
- Locally (at exit bar) supplies necessary 13-16 amp. in rush current to energize the latch-pull back exit device with most 1 amp. or greater power supply.
- The PM1's surge allows up to 700' wire run from the exit device with 18 gauge wire
- 2 year warranty

Command Access Technologies

EZ-REX Switches

Features:

Field Installable Request-to-Exit or AE switch (for Schlage L9000 and Command Access ML1 series mortise locks) - sends a signal to alert the control panel that the door is about to be opened by someone intending to exit from within the secured area

Command Access Concealed Door Loop (CDL)

Features:

for 3/4" offset Pivots

- Offset Pivot Applications (3/4" only)
- Easy Installation
- Supports up to 105 degree swing
- 3-Year Warranty

This patented Concealed Door Loop (CDL) is a low cost method of transferring low voltage power from the door frame to the locking device. Whereas typical door loops are surface mounted and remain constantly visible, the CDL slides into the frame completely concealing itself when the door is closed. Commonly used in storefront or main entrance applications with 3/4" offset pivots that swing up to 105°. The CDL's aesthetic appeal will benefit retrofits and new installations alike.

Command Access Technologies

EL Device Kit for Von Duprin

The electrified latch pullback kit is a simple, cost effective way to convert a non-electrified Von Duprin exit device to an electrified latch pullback exit device by simply replacing the standard mechanical Von Duprin baseplate with the Command Access modified EL baseplate contained in the kit. The kit also contains the PM200 power booster module as the standard solenoid interface module. Besides performing the basic coil switching this module allows up to a 700' wire run from the power supply with 18/2 wire and gives the user the option of using our PS series power supplies, Von Duprin's or most standard DC 1.5 Amp or higher power supplies. Once installed the exit device maintains the same appearance of the original manufacturers non-electrified mechanical device but can be remotely controlled via a card reader, prox reader, biometric reader, keypad or by an ordinary switch. The electrified latch-pullback devices are commonly used in high-occupancy/high-traffic conditions such as hospitals, airports, schools and they are commonly used with double doors with automatic openers.

Features

- High performance custom solenoid designed for strong latch-pullback and continuous duty applications.
- Standard high performance interface module (the PM200) ensures solid solenoid performance and may extend solenoid life.
- The standard PM200 interface module allows wire runs up to 700' with 18/2 wire from the power supply to the exit device, when used with PS1 or PS2..
- The kit works with most 1.5 A or greater switching, linear, or non-regulated DC power supplies* (see specs for output fuse and Relay requirements).
- Latch bolt monitoring (LBM) available Special Order
- Request-to-exit (REX) switch available Special Order
- Precision machined parts make for years of trouble free operation.
- "No-hassle" 3-year warranty
- UL Listed

Specifications

- Operating Voltage 24VDC + or - 10%
- Amperage – Surge current 12A for 150ms
  Holding current: 270 mA
- Coil Resistance
  Primary Coil: 2 ohms Holding Coil: 125 ohm
- Output fuse requirement – glass type fuse = 3.5 A or greater
  Resetable type = 1.0 A trip or greater
- Relay requirement – 5A or greater
- Solenoid Temp Max
  (outer solenoid housing) – 57° C (135 ° F)

Stocked Product
VLP KIT 36"
VLP KIT 48"

Command Access Technologies

PS1/PS1-2 Power Supply Unit

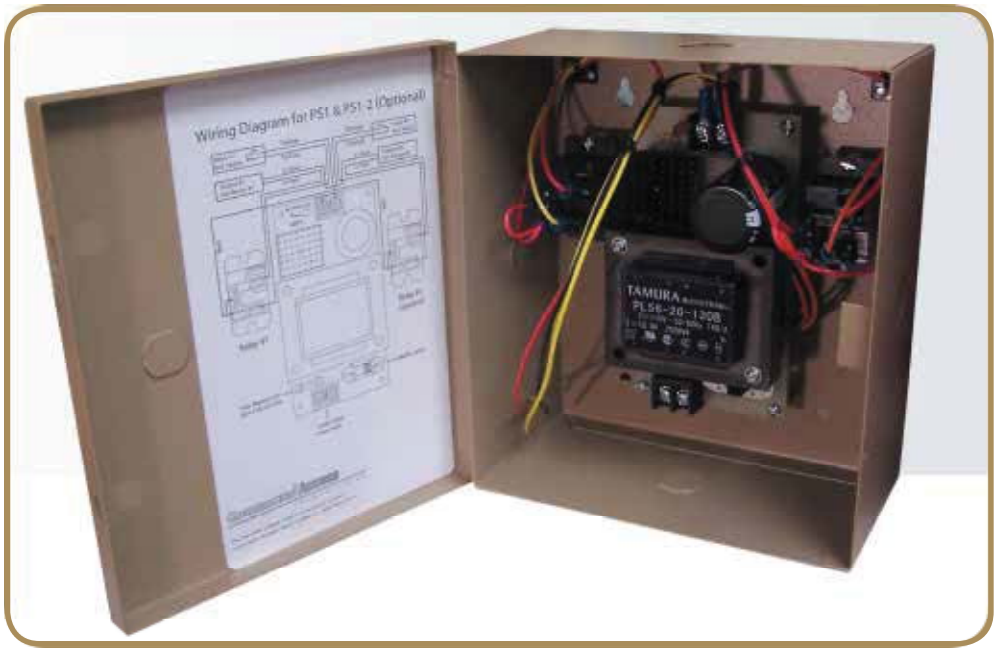

Application:

The PS1 and the PS1-2 are a heavy-duty low cost solution for powering electric latch-retracting exit devices. The PS1 offers a single heavy duty 20 amp relay while the PS1-2 includes a pair of these 20 amp relays. These power supplies offer raw, unregulated DC current which is ideal for the extreme inrush requirement of most solenoid-driven electric latch retracting exit devices. The power supply is housed in a sturdy yet metal enclosure.

Features

- Power supply delivers the necessary high current in-rush for Von Duprin
- Soid-state design eliminates problems associated with mechanical relays
- Single input/output
- No hassle 3-Year Warranty
- UL Listed

Specifications

- 110VAC input voltage
- 2.3 continuous @ 24VDC (56VA transformer) output current
- Onboard surge supply to provide 16A in rush current for 300ms.
- Heavy duty 20A replay (PS1-2 includes 20A relay X 2)
- Dimensions: 7” x 8” x 3.5”
- 2 year warranty

Stocked Product

- PS1, PS2

Deltana-Bolts

4FBS Series
4" Flush Bolt
Square Corner

Specifications:
DIMENSIONS: 4"x3/4"x 1/8"
CORNER: SQUARE
BOX QTY: 10 PC
CASE QTY: 200 PC

Stocked Product
- **Finishes:** US3, 10B, 15, 15A

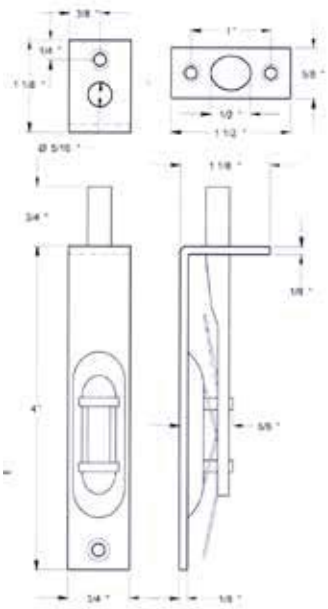

6FBS Series
6" Flush Bolt
Square Corner

Specifications:
DIMENSIONS: 6"x3/4"x 1/8"
CORNER: SQUARE
BOX QTY: 5 PC
CASE QTY: 150 PC

Stocked Product
- **Finishes:** US3, 10B, 15, 26D
- **Ives Equal# 262**

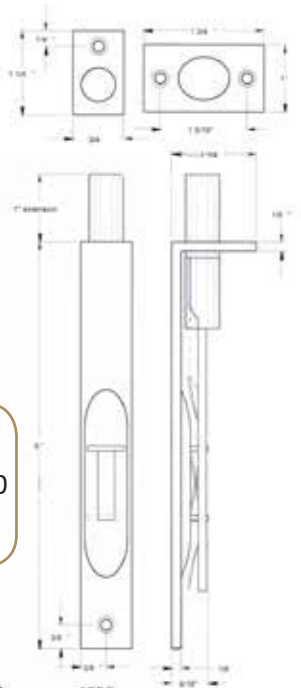

6FBR Series
6" Flush Bolt
Radius Corner

Specifications:
DIMENSIONS: 6"x3/4"x 1/8"
CORNER: ROUND
BOX QTY: 5 PC
CASE QTY: 150 PC

Stocked Product
- **Finishes:**
  US3, 10B, 15, 19, 26, 26D
- **Ives Equal# 265**

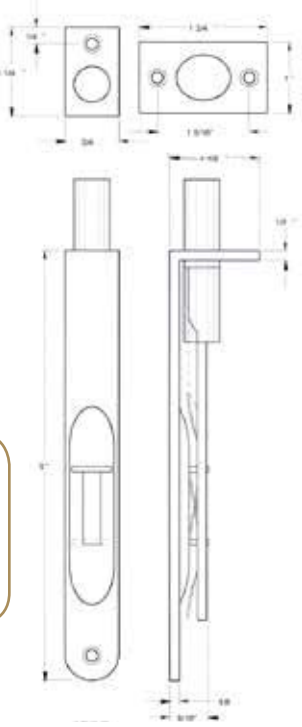

7FBR Series
7" Heavy Duty, Solid Brass
Radius Corner

Specifications:
DESCRIPTION: 7" FLUSH BOLT
DIMENSIONS: 7"x 3/4"x1/8"
CORNER: ROUND
BOX QTY: 15 PC
CASE QTY: 150 PC

Stocked Product
- **Finishes:**
  US3, 10B, 15, 19, 26, 26D

Packaging: 1 flush bolt, #6 3/4" flat head Phillips screws, and 1 mortise strike packed in individual poly bag.

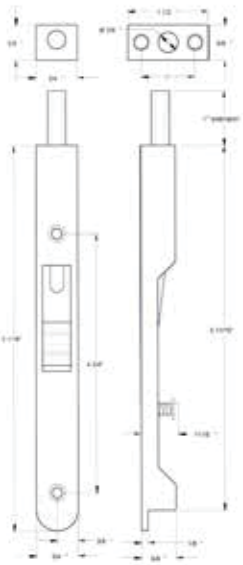

Deltana-Bolts

4SBCS & 6SBCS Series - Concealed Screw, Surface Bolts

Specifications:

Concealed screw surface bolts are packaged individually in poly bags. Strikes and screws are included and packed in separate poly bags.

Each concealed screw surface bolt is supplied with 3 strikes: Universal, Mortise, and Angle strike with matching solid brass Phillips's head screws.

Knob diameter: 5/8"

Fully concealed screw design improves security and appearance.

The surface bolt is designed with a unique ball bearing tension system that holds the bolt in any position, prevents scratching of the bolt, and ensures a smooth sliding action.

Stocked Product

- **4SBCS 4" x 9/16":** US3, 10B, 15, 15A, 26, 26D
- **6SBCS 6" x 9/16":** 3, 10B, 15, 15A, 26, 26D
- **Ives Equal# 40**

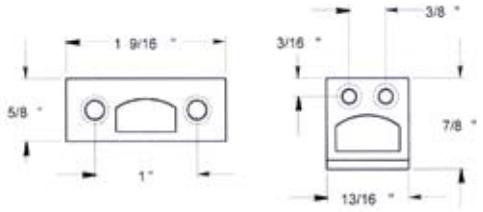

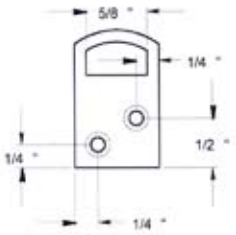

6SB, 8SB, 12SB, 18SB Series - Surface Bolts, Heavy Duty, Solid Brass

Specifications:

Solid brass bolt includes solid brass guides.

Each surface bolt is supplied with 3 strikes: Universal, Mortise, & Angle strike with matching solid brass Phillips head screws.

Rod resistance = 109 lbs.

Each strike and screws are individually-packed in poly bags.

Guides are held in place with a unique ball bearing system that eliminates scratches on the barrel of the bolt, prevents rattling of the bolt, holds the bolt in any position, and ensures a smooth sliding action.

Stocked Product

- **6SB 6" x 5/8":** 10B, 15
- **8SB 8" x 5/8":** 10B, 15
- **12SB 12" x 5/8":** 10B, 15, 15A, US3
- **18SB 18" x 5/8":** 10B, 15, 15A, US3
- **Ives Equal# 253**

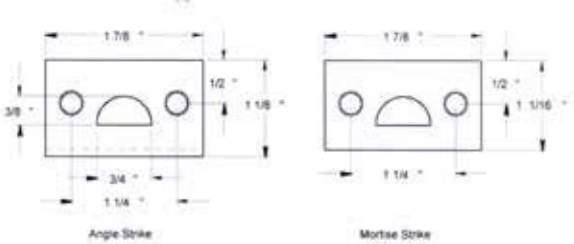

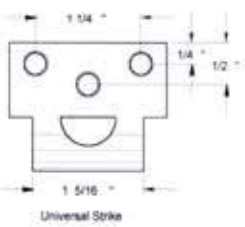

Deltana-Bolts

DDB425 Series - 4” Dutch Door Bolts

Specifications:

SIZE: 4”x11 /2”
BOX QTY.: 10 PC
CASE QTY.: 100 PC
CASE WEIGHT: 36 LB

- Solid brass bolt includes solid brass guides.
- Size: Width of bolt: 5/8” diameter half round rod
  Width of guides: 1-1/2”
  Diameter of knob: 1-15/16”
- Individually packed in poly bag with strike and matching screws.

Stocked Product
- **Finishes:** 3,10B,15,26D

FPG10 Series - 10” Surface Bolt w/ Off-set, HD

Specifications:

ROD DIMENSIONS: 10” x 5/8”
BOX QTY.: 10 PC
CASE QTY.: 30 PC

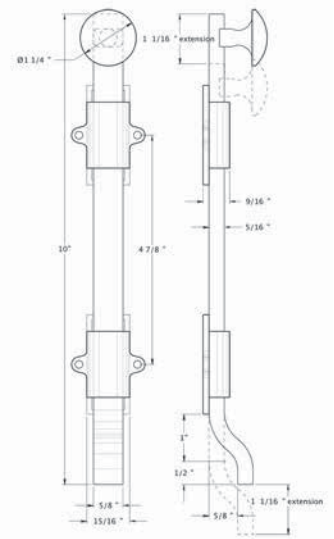

Stocked Product
- **Finishes:** 10B, 15, 15A, 3

Deltana -Bumpers & Stops

MDH30 Series - Magnetic Door Holder/Stop 3”, Solid Brass

Specifications:

DESCRIPTION: MAGNETIC DOOR HOLDER 3” SB
SIZE: 3”
BOX QTY: 10 PC
CASE QTY: 100 PC

Stocked Product
- **Finishes:** US3, 10B, 15, 26

Concealed screw mounting for an elegant installation.

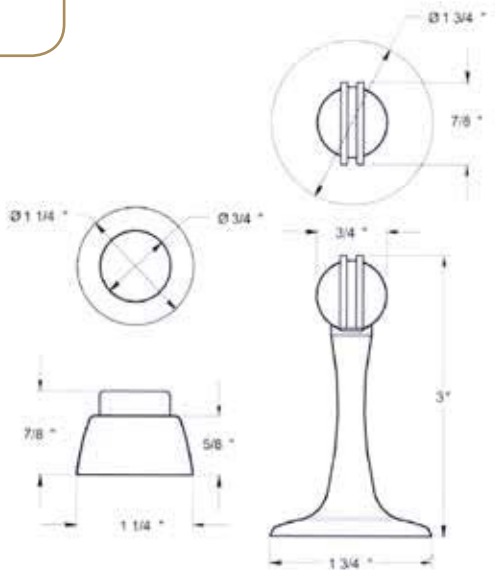

MDH35 Series - Magnetic Door Holder/Stop 3-1/2”, Heavy Duty Magnet

Specifications:

MAGNETIC DOOR HOLDER 3-1/2” SB
SIZE: 3-1/2”
BOX QTY: 5 PC
CASE QTY: 50 PC

Receptor piece is spring-loaded to absorb shock.

Stocked Product
- **Finishes:** US3, 10B, 15, 26

Extra strong magnet for heavy duty doors and spring hinges.

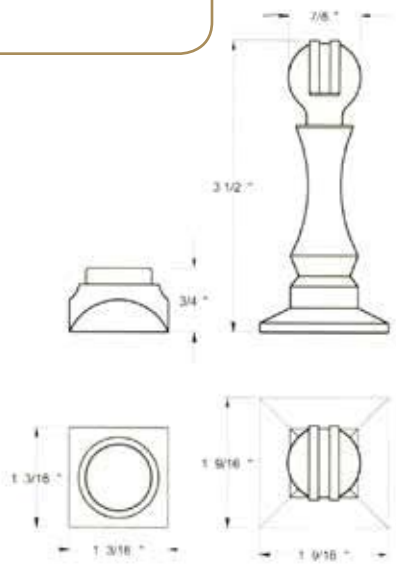

Deltana - Bumpers & Stops

MDHF25 Series - Magnetic Door Holder Flush 2-1/2" Diameter

Specifications:

BOX QTY: 10 PC
CASE QTY: 100 PC

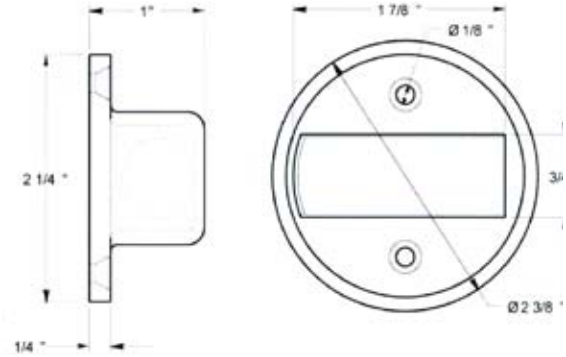

Stocked Product
- **Finishes:** US3, 10B, 15, 26

BDS425 Series - 4" Baseboard Door Bumpers, Solid Brass

Specifications:

PROJECTION 4"
BOX QTY: 10 PC
CASE QTY: 200 PC
CASE WEIGHT: 50 LB
INCLUDED: Packed in individual poly bag with two rubber tips.

Gray & white rubber tips included.

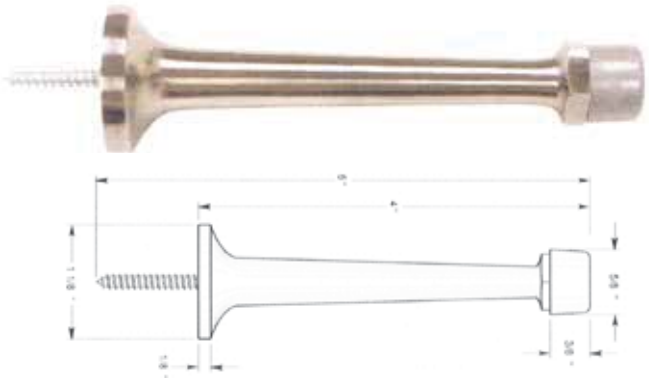

Stocked Product
- **Finishes:** US3, 10B, 15, 15A, 19, 26, 26D
- **Ives Equal# 62MB**

BDS30 Series - 3-1/4" Baseboard Door Bumpers, Solid Brass

Specifications:

PROJECTION: 3-1/4"
BOX QTY: 10 PC
CASE QTY: 200 PC
CASE WEIGHT: 60 LB
INCLUDED: Packed in individual poly bag with two rubber tips.

Gray & white rubber tips included.

Stocked Product
- **Finishes:** 3, 10B, 15, 15A 19, 26, 26D
- **Ives Equal# 61MB**

Deltana - Bumpers & Stops

SDS375 Series - 3 3/4" Baseboard Door Bumpers, Steel Spring, Heavy Duty

Specifications:

PROJECTION: 3-3/4"
BOX QTY: 50 PC
CASE QTY: 500 PC

Stocked Product
- **Finishes:** US3, 10B, 15, 26
- **Ives Equal# 061**

UFB4505 Series - Round Universal Floor Bumper Height 1-1/2"

Specifications:

DIAMETER: 1-1/8"
BOX QTY: 20 PC
CASE QTY: 120 PC
CASE WEIGHT: 49 LB
HEIGHT: 1-1/2"
INCLUDED: Packed in individual poly bag with mounting hardware .

Stocked Product
- **Finishes:** 10B, 15, 26, 26D

UFB5000 Series - Round Universal Floor Bumper Height 2"

Specifications:

DIAMETER: 1-1/8"
BOX QTY: 20 PC
CASE QTY: 100 PC
CASE WEIGHT: 54 LB
HEIGHT: 2"
INCLUDED: Packed in individual poly bag with mounting hardware .

Stocked Product
- **Finishes:** 10B, 15, 26, 26D

Deltana - Bumpers & Stops

DHK5 Series - 5" Kick Down Holders, Solid Brass

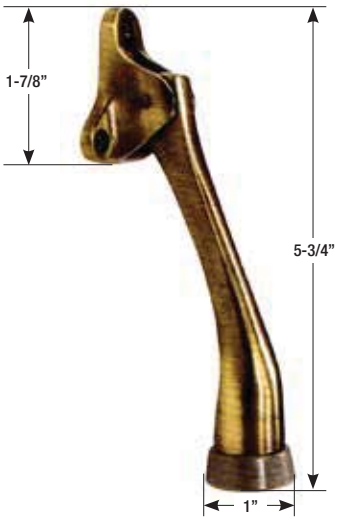

Stocked Product
- **Finishes:** 3, 10B, 15, 26, 26D
- **Ives Equal# FS452**

DSM125 Series - Magnetic Dome Stop & Catch

With spring bumper and holder action and concealed screw mounting.

Specifications:

HEIGHT: 1-3/8"
BOX QTY: 10 PC
CASE QTY.100 PC
CASE WEIGHT: 31 LB
INCLUDED: Packed in individual poly bag with screws.

Stocked Product
- **Finishes:** 10B, 15, 19, 26, 26D

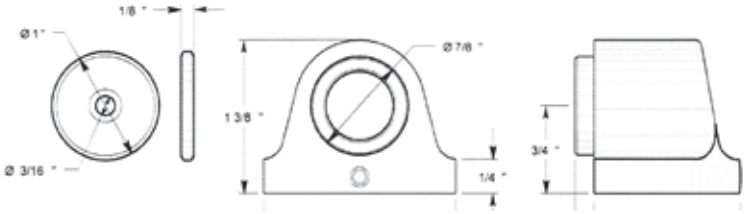

Deltana - Bumpers & Stops

HP70 Series - Hinge Pin Stops, Hinge Mounted

Specifications:

PROJECTION: 2-1/2" x 1-15/16""
BOX QTY: 30 PC
CASE QTY: 300 PC
CASE WEIGHT: 25 LB
INCLUDED: Packed in individual poly bag.

Stocked Product
- **Finishes:** US3, 10B, 15, 19, 26
- **Ives Equal# 70**

HPA69 Series - Adjustable Hinge Pin Stops, Hinge Mounted

Specifications:

PROJECTION: 2-1/2" x 1-15/16""
BOX QTY: 30 PC
CASE QTY: 300 PC
CASE WEIGHT: 25 LB
INCLUDED: Packed in individual poly bag.

Stocked Product
- **Finishes:** US3, 10B, 15, 19, 26, 26D
- **Ives Equal# 69**

Deltana - Bumpers & Stops

DSF3225 - Floor Mount, Bumper, HD

Specifications:

BOX QTY: 5 PC
CASE QTY: 50 PC
CASE WEIGHT: 48 LB
INCLUDED: Packed In Individual Poly Bag With Mounting Hardware.

Stocked Product
Finishes: 3, 10B, 26D

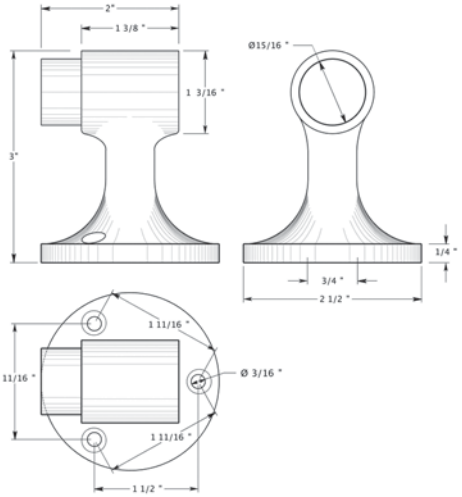

DSHP916 - Dome Stop High Profile

Specifications:

BOX QTY: 10 PC
CASE QTY: 200 PC
CASE WEIGHT: 38 LB
INCLUDED: Packed In Individual Poly Bag With Mounting Hardware.

Stocked Product
Finishes: 3, 10B, 26D

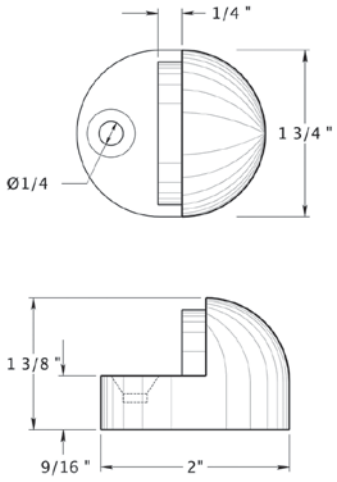

DSLP316 - Dome Stop Low Profile

Specifications:

BOX QTY: 10 PC
CASE QTY: 200 PC
CASE WEIGHT: 48 LB
INCLUDED: Packed In Individual Poly Bag With Mounting Hardware.

Stocked Product
Finishes: 3, 10B, 26D

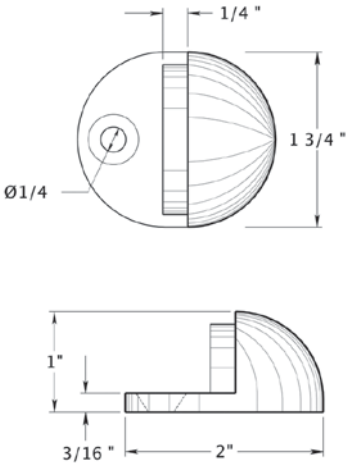

Deltana - Bumpers & Stops

SAHF358 - Floor Mount Bumper w/ Holder

Specifications:

BOX QTY: 5 PC
CASE QTY: 50 PC
CASE WEIGHT: 62 LB
INCLUDED: Packed In Individual Poly Bag With Matching Screws.

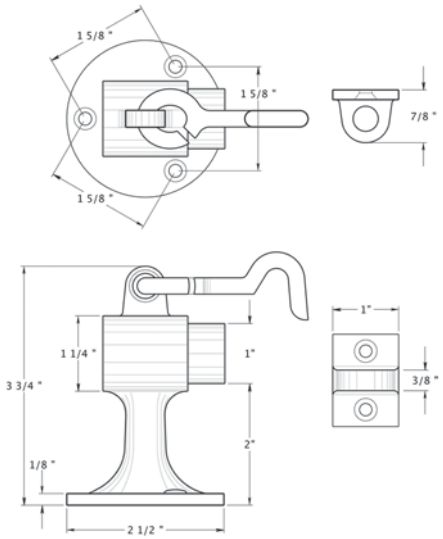

Stocked Product
Finishes: 10B, 26D

WBC238 - Convex Flush Bumper 23/8" Diameter

Specifications:

BOX QTY: 50 PC
CASE QTY: 150 PC
CASE WEIGHT: 40 LB
INCLUDED: Packed In Individual Poly Bag With Mounting Hardware.

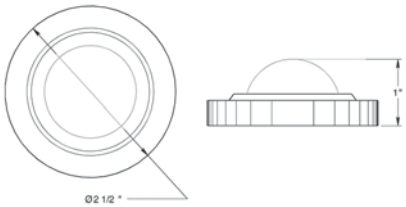

Stocked Product
Finishes: 10B, 26D

Deltana - Catches

BC218 Series - Ball Catches, Solid Brass

Specifications:

SIZE: 2-1/8" x 1"
STRIKE: 2-1/8" x 1-3/8"
BOX QTY: 20 PC
CASE QTY 200 PC
CASE WEIGHT: 42 LB
INCLUDED: Packed in individual poly bag with strike plate and matching screws.

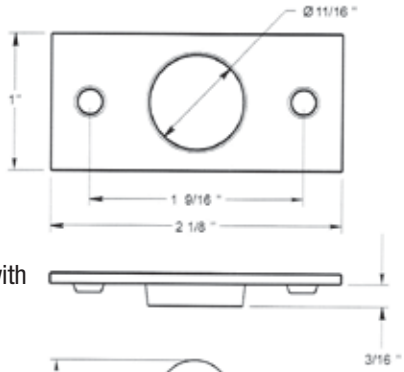

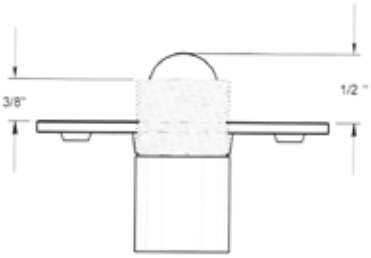

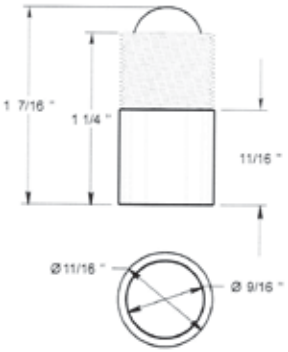

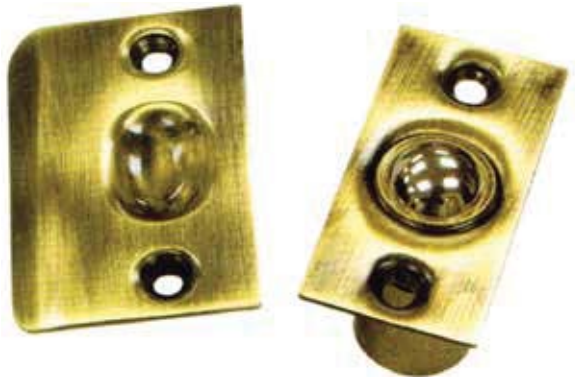

Stocked Product
- **Finishes:** US3, 10B, 15, 19, 26, 26D
- **Ives Equal# 347**

BC218R Series - Ball Catch, Round Corners, Solid Brass

Specifications:

SIZE: 2-1/8" x 1"
STRIKE: 2-1/8" x 1-3/8"
BOX QTY: 20 PC
CASE QTY: 200 PC
CASE WEIGHT: 42 LB
INCLUDED: Packed in individual poly bag with strike plate and matching screws.

Face of plate = 2 1/8" x 1"

Strike Plate = 2 1/8" x 1 3/8"

Stocked Product
- **Finishes:** 10B, 15
- **Ives Equal# 349**

Deltana - Catches

RCA430 Series - Heavy Duty, Roller Catches, Solid Brass

Specifications:

SIZE: 3-5/16" x 1"
BOX QTY: 10 PC
CASE QTY: 100 PC
CASE WEIGHT: 56 LB
INCLUDED: Packed with strike plate and matching screws.

Stocked Product
- **Finishes:** 10B, 15, 26D
- **Ives Equal# RL30**

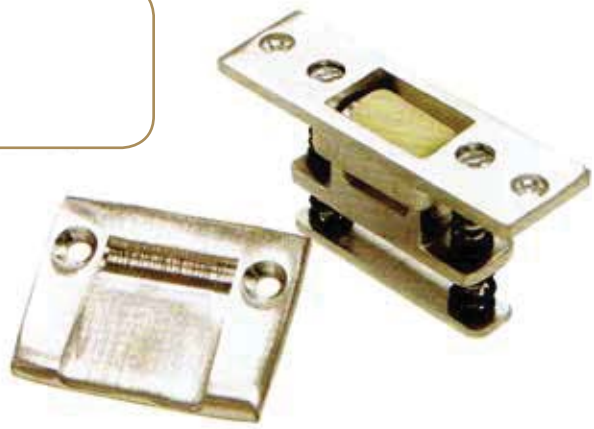

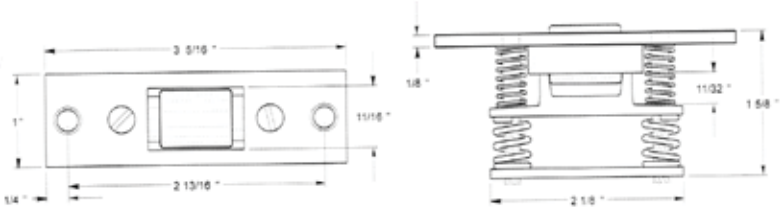

RCA336 - Roller Catch

Specifications:

SIZE: 2-1/4"x 7/8"
BOX QTY: 20 PC
CASE QTY: 200 PC
CASE WEIGHT: 46 LB
INCLUDED: Packed with strike plate and matching screws.

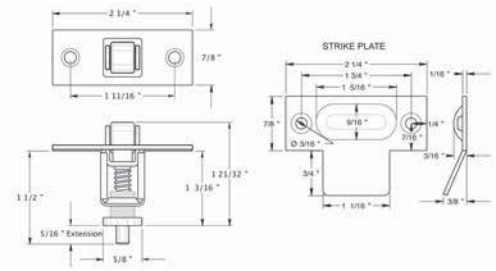

Stocked Product
Finishes: 10B, 19, 26D, 3

RCS338 - Roller Catch, Surface Mounted

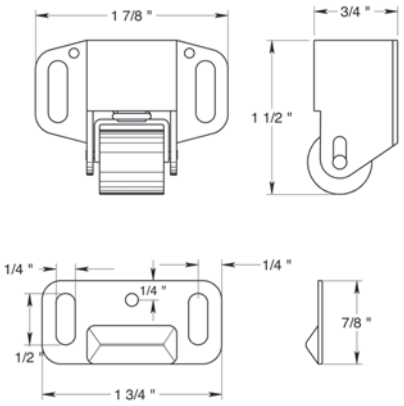

Stocked Product
Finishes: 10B, 15, US3

Deltana - Knobs & Pulls

FP221R Series

Specifications:

DESCRIPTION: ROUND
DIMENSIONS: 2-1/8" DIAMETER
BOX QTY: 50 PC
CASE QTY: 500 PC
CASE WT: 21 LB

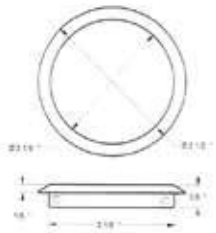

Stocked Product
- **Finishes:** US3, 5, 10B, 15, 15A, 19, 26, 26D
- **Ives Equal# 221**

FP222 Series

Specifications:

DESCRIPTION: RECTANGLE
DIMENSIONS: 3-1 /8" x 1-5/16 " x 7/16"
BOX QTY: 20 PC
CASE QTY: 200 PC
CASE WT: 30 LB

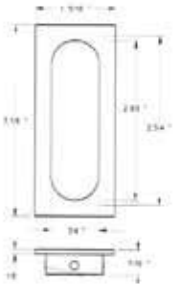

Stocked Product
- **Finishes:** US3, 10B, 15, 26, 26D
- **Ives Equal# 222**

FP223 Series

Specifications:

DESCRIPTION: OBLONG
DIMENSIONS: 3-1 /2" x 1-1/4" x 5/16"
BOX QTY: 40 PC
CASE QTY: 400 PC
CASE WT: 21 LB

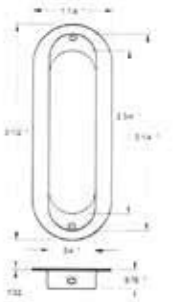

Stocked Product
- **Finishes:** US3, 10B, 15, 19, 26, 26D
- **Ives Equal# 223**

Deltana - Knobs & Pulls

FP413 - Flush Pull

Specifications:

SIZE: 4”x 13/4”x7/16”
BOX QTY: 20 PC
CASE QTY: 200 PC
CASE WEIGHT: 30 LB

Stocked Product
Finishes: 3, 10B, 15

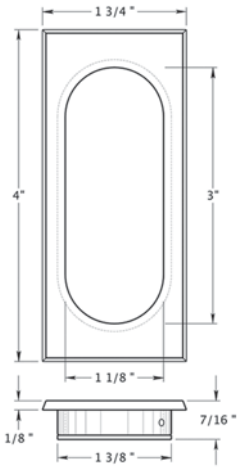

EP475 Series - Edge Pulls, Solid Brass

Specifications:

BOX QTY: 20 PC
CASE QTY: 200 PC
CASE WEIGHT: 40 LB
INCLUDED: Packed in individual poly bag.

Stocked Product
- **Finishes:** 3, 5, 10B, 15
- **Ives Equal# 230**

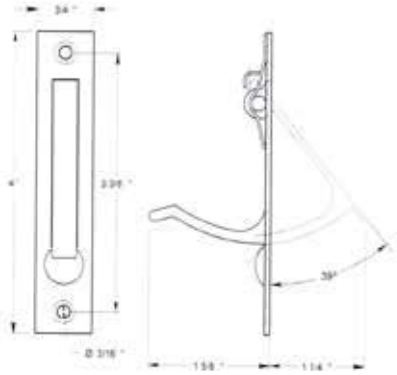

Deltana - Accessories

SDL688 Series - Screen Door Latch, Mortise Lock, Solid Brass

Specifications:

Mortise case: 1-7/8" x 2" x 21/32"
Extruded brass escutcheon plates: 6" x 1-1/2"
Face size: 3-1/4" x 3/4"
Backset: 1-1/2"
Door thickness range: 1" to 2"

Stocked Product
• **Finishes:** 15

SDL980 - Storm Door Latch, Round, Tubular Lock

Specifications:

BOX QTY.: 1 PC
CASE QTY.: 50 PC
CASE WEIGHT: 35 LB
DOOR THICKNESS: 7/8"- 1-3/8"
HANDING: Reversible

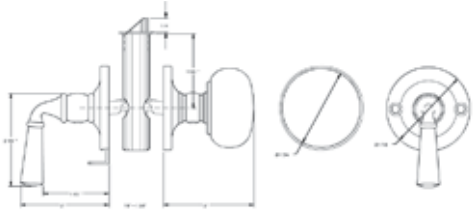

Stocked Product
Finishes: 10B, 15, 3

MS211 Series - Mail Slots, Solid Brass

Specifications:

SIZE: 3-5/8"x 13-1/8"
BOX QTY: 1 PC
CASE QTY: 25 PC
CASE WEIGHT: 29 LB
INCLUDED: Packed in individual poly bag with matching screws.

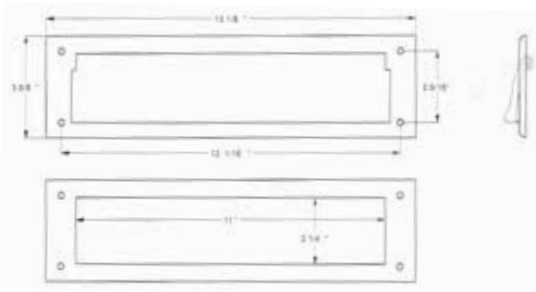

MSS005 - Mail Box Sleeve

Specifications:

SIZE: 11-1/2"x 2-3/4"x1-3/4" depth
BOX QTY: 5 PC
CASE QTY: 30 PC
INCLUDED: Packed in individual poly bag with mounting screws.

Compatible with MS211

Stocked Product

Item	Finish
MS211	3, 10B, 15, 19, 26
• Ives Equal# 620	
MSS005	US32D

Deltana - Accessories

DKV630 Series - Door Knocker - Viewer, 1800

Specifications:

SIZE: 6" x 3"
MOUNTING CENTERS: 3-3/4"
MAX DOOR THICKNESS: 1-3/4"
BOX WEIGHT: 1 LB
PACKAGING: 1 pc / box with glass lens viewer, 1" diameter, 9/16" bore shaft
CASE QTY: 100 PC
CASE WEIGHT: 42 LB

Stocked Product
- **Finishes:** US3, 10B, 15, 19,26

SDP25 Series - Sliding Door Pocket Locks, Solid Brass - Passage

Specifications:

SIZE: 2-1/2"x 2-3/4"
BOX QTY: 10 PC
CASE QTY: 50 PC
CASE WT: 44 LB

Stocked Product
- **Finishes:** 3, 5, 10B, 15, 15A, 26, 26D
- **Ives Equal# 990**

SDL25 Series - Sliding Door Pocket Locks, Solid Brass - Privacy

Specifications:

SIZE: 2-1/2"x 2-3/4"
BOX QTY: 10 PC
CASE QTY: 50 PC
CASE WT: 52 LB

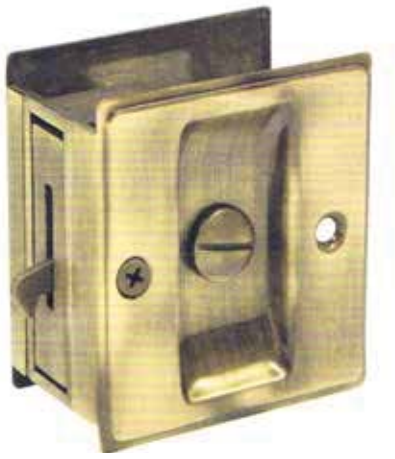

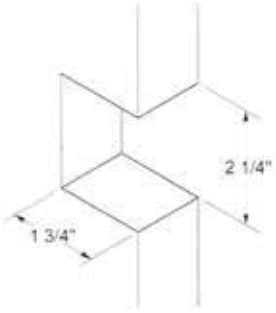

Stocked Product
- **Finishes:** 3, 5, 10B, 15, 15A, 26, 26D
- **Ives Equal# 991**

Deltana - Accessories

SDPA325 Series - Heavy Duty Pocket Locks, Adjustable, Solid Brass - Passage

Specifications:
SIZE: 3-1/4"x 2-1/4"
BOX QTY: 10 PC
CASE QTY: 50 PC
CASE WT: 56 LB

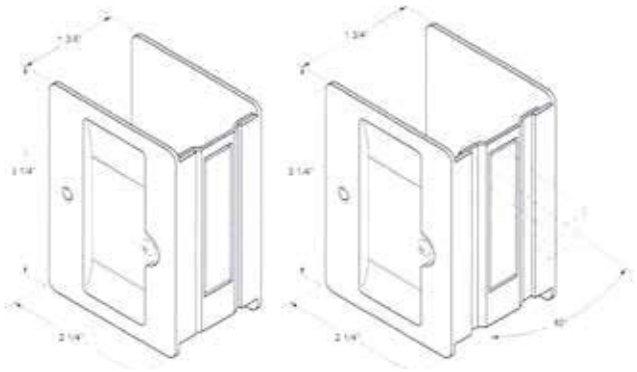

Stocked Product
- **Finishes:** US3, 10B, 15, 19, 26, 26D

SDLA325 Series - Heavy Duty Pocket Locks, Adjustable, Solid Brass - Privacy

Specifications:
SIZE: 3-1/4"x 2-1/4"
BOX QTY: 10 pc
CASE QTY: 50 PC
CASE WT: 62 LB
Solid brass knob projection: 1-3/4"

Stocked Product
- **Finishes:** US3, 10B, 15, 19, 26, 26D

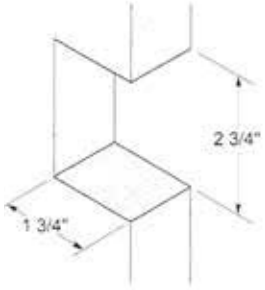

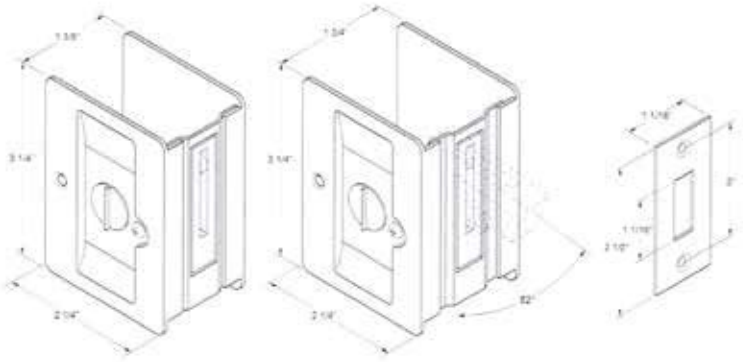

Deltana - Accessories

DASH95 Series - Spring Hinge, Double Action, Floor

Specifications:

DOOR THICKNESS: 1-3/8" x 1-3/4"
BOX QTY: 1 PC
CASE QTY: 10 PCS
CASE WT: 40 LB

- Ball bearing
- Double-acting
- Holds open at approximately 850
- 90 LBS Load
- Adjustable tension Non-handed
- Packed one set per box with wood screws, side plates, back plate, and top pivot.

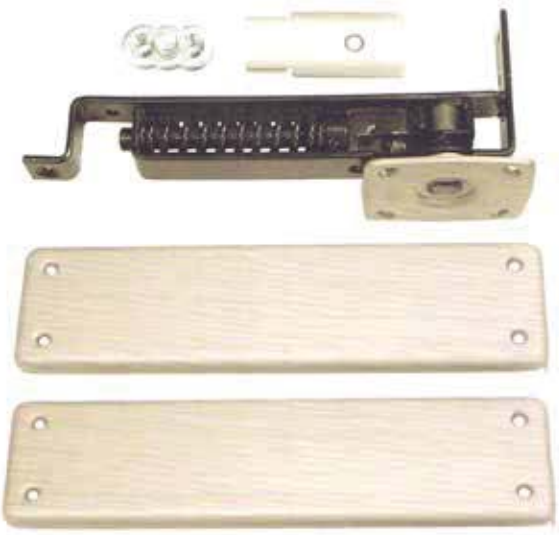

Stocked Product
DASH95
- **Finishes:** US3, 10B, 15, 26

JB DASH95 - Jamb Bracket only
- **Finishes:** US3, 10B, 15, 26

JB DASH95
Jamb Bracket

Remember:
Jam Bracket
is sold separately.

CF066 Series - Window Lock Casement Fastener, Solid Brass SMALL

Specifications:

SIZE: 1-5/8" x 7/8" , PROJ. 1-3/8"
BOX QTY.: 20 PC
CASE QTY.: 200 PC
CASE WEIGHT: 38 LB
INCLUDED: Packed in individual poly bag with three strikes and matching screws.

Stocked Product
- **Finishes:** US3, 10B, 15, 19, 26D
- **Ives Equal# 066MB**

Deltana - Accessories

CF66 Series - Window Lock Casement Fastener, Solid Brass MEDIUM

Specifications:

SIZE: 2-1/16" x 1-1/16", PROJ. 1-7/8'
BOX QTY.: 10 PC
CASE QTY.: 100 PC
CASE WEIGHT: 40 LB
INCLUDED: Packed in individual poly bag with three strikes and matching screws.

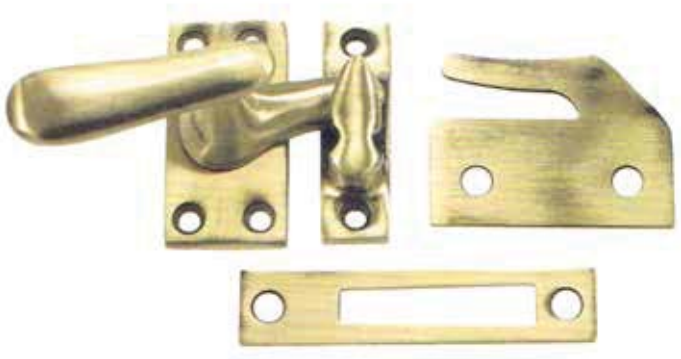

Stocked Product
- **Finishes:** US3, 10B, 15, 26, 26D
- **Ives Equal# 66MB**

DDQ56 Series - Dutch Door Quadrant

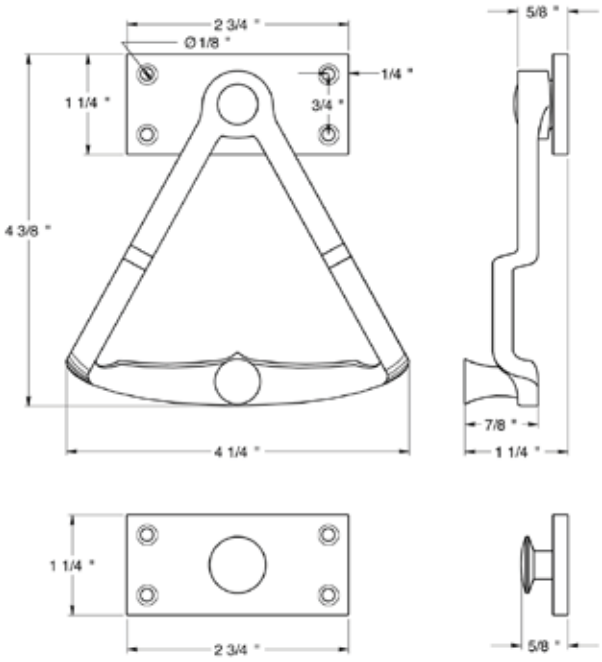

Stocked Product
- **Finishes:** US3, 10B, 15

Deltana - Accessories

DSPUT - Ornate Tip

Deltana Solid Brass hinges come in an array of fine finish and maintain a superior finish due to its ability to resist oxidation.

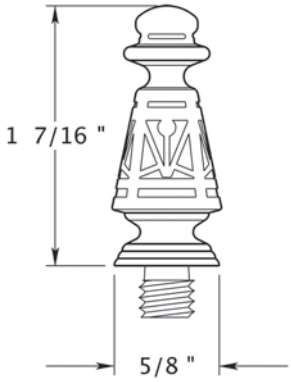

Specifications:

BOX QTY.: 1 PC
CASE QTY.: N/A
WEIGHT: 100 EA., 8 LB
DOOR THICKNESS: 7/8"- 1-3/8"
HANDING: Reversible

Stocked Product
Finishes: 10B, 15, 15A, 3

CSBP, DSBP - Ornate Hinges

Specifications:

BOX QTY.: 1 PR
CASE QTY.: 30 PR
CORNERS: SQUARE
THICKNESS: .168
WOOD SCREW: #12 x 1-1/4"
MACHINE SCREW: N/A

Stocked Product

Item#	Size	Finish
CSBP	4 X 4, 4.5 X 4.5	US3
DSBP	4 X 4, 4.5 X 4.5	10B, 15, 15A

Deltana - Accessories

CSB66BB, DSB Series - Square Hinges

Deltana Solid Brass hinges come in an array of fine finish and maintain a superior finish due to its ability to resist oxidation.

DSB55B with10B finish

DSB4060U with 10B finish

DSB66BB with 15A finish

Specifications:

BOX QTY:	1 PAIR	
CORNERS:	SQUARE	
MACHINE SCREW:	N/A	
THICKNESS:	6 X 6	.205
	4.5 X 6, 5 X 5	.145
	4 X 6	.129

Stocked Product

Item#	Size	Finish
CSB66BB	6 X 6	US3 Discontinued
DSB	4.5 X 6, 5 X 5, 6 X 6, 4 X 6	10B
DSB	5 X 5, 6 X 6	15, 15A
DSB	5 X 5	US3

DETEX

ECL 230D – Exit Control

Features:

- Single point deadbolt locking device, 1" throw
- Unauthorized pressing of exit bar emits high decibel, 100db alarm
- Inside key control allows alarm bypass
- Accepts rim cylinder
- UL listed panic hardware
- 9 volt standard battery included
- Required Cylinder: Rim (not included)

Stocked Product
- 230D

V40EB – Exit Control

Features:

- 100db alarm
- Powered by 9 volt battery included
- Low battery alert
- Red flashing LED alert when not armed
- Inside key control allows alarm bypass
- Accepts 1-1/8" mortise cylinder
- Latch bolt monitoring standard
- Required Cylinder: Mortise (not included)

Code Compliance:

- Grade 1 UL listed panic
- Fire exit hardware
- UL listed for 3 hours
- UBC97 standard 7-2
- Exceeds ADA, CA title 19 ANSI / BHMA requirements

Stocked Product
- V40EB for 36" door
- V40EBL for 48" door

EAX-500

Features:

- Low cost, self contained door alarm with piezo horn
- Surface door mount only
- Patented plastic template allows for fool proof alignment of internal magnetic door contact
- Temper resistant housing
- Taper cover allows installation on 2" minumum stile doors
- Inside key control requires 1-1/8" mortise cylinder with standard Yale cam (supplied less cylinder)
- For outside key control (optional) use RIM cylinder (not supplied)

Stocked Product
- EAX500

EAX-500 - Is designed for applications that require an alarmed exit device on secured doors. Replaces old model EA-500

Don-Jo

Wall Bumpers

1400
1" Diameter
With Anchor Screw - Cast Brass

1406
2 1/2" Diameter

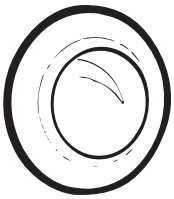

1407
2 1/2" Diameter

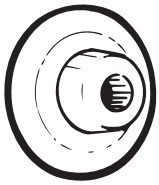

Plastic Anchor & Plastic Dry Wall Anchor

Wrought Material

Stocked Product
1400 - 613, 626
1406 - 625
1407 - 619

Floor Stops

1440
Low Style
1/8" H x 1 3/4"
Diameter Base

W/S & MS & Exp Shield & Plastic Anchor

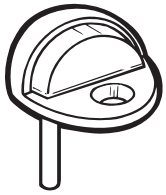

1442
High Style
3/8" H x 1 3/4"
Diameter Base

W/S & MS & Exp Shield & Plastic Anchor

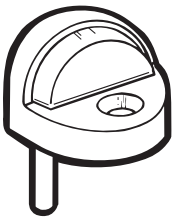

Stocked Product
1440 - 619
1442 - 619

Door Holder

1467
5" Projection

Solid Brass Material

SMS Fastener

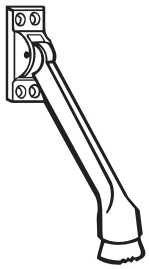

Stocked Product
1467 - 605, 613, 626

Don-Jo

Push & Pull Plates, Pull Handles

35 Door Pull

5 1/2" CTC

• Dimensions - Overall x Projection x Clearance

7 1/2" x 1 7/8 x 1 1/2"

Stocked Product
35 - 605, 613, 630
70 - 605
71 - 605, 613, 629, 630
7015 - 605, 613, 630
7115 - 605, 629

70,71 Push Plate

70 - 3 1/2" x 15"

71 - 4" x 16"

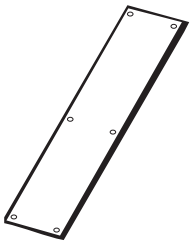

7015, 7115 Pull Plate

7015 - 3 1/2" x 15"

7115 - 4" x 16"

6" CTC

3/4" diameter pull

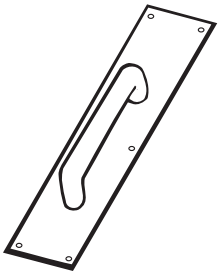

Strikes

9234

2 3/4" x 1 1/8"

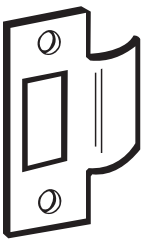

ST161

4 7/8" x 1 1/4"

ST214

2 1/4" x 1 1/4"

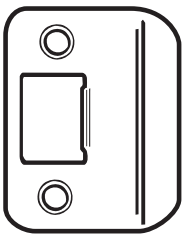

Stocked Product
9234 - 605, 630
ST161 - 605, 613, 626
ST214 - 605, 630

2-SDS

4 7/8" x 1 1/4"

TS-100-CP Thimble strike

1" Diameter

Stocked Product
2-SDS-BP (Steel Brass Plated)
2-SDS-SL (Steel Silver Coated)
TS-100-CP (Crome Plated)

Don-Jo - *Extended Lip Strikes*

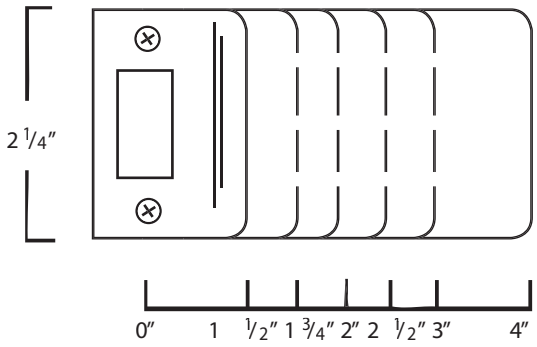

2-1/4" Extended Lip Strike

Number .... Dimension
EL102 ..... 2-1/4" X 2"
EL115 ..... 2-1/4" X 1-1/2"
EL125 ..... 2-1/4" X 2-1/2"
EL175 ..... 2-1/4" X 1-3/4"

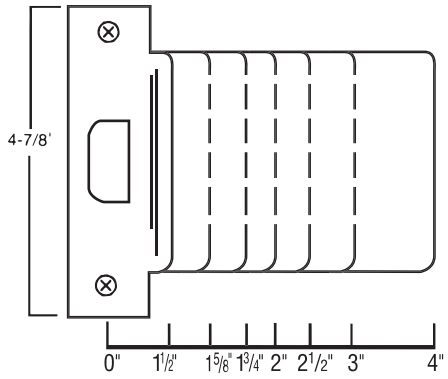

4-7/8" Extended Lip ANSI Strike

Number .... Dimension
EST102 ..... 4-7/8" X 2"
EST115 ..... 4-7/8" X 1-1/2"
EST125 ..... 4-7/8" X 2-1/2"
EST158 ..... 4-7/8" X 1-5/8"
EST175 ..... 4-7/8" X 1-3/4"

Stocked Product

2-1/4" Extended Lip Strike

EL102 - DU, 605, 619, 630
EL115 - DU, 605, 619, 630
EL125 - DU, 630
EL175 - DU, 605, 619, 630

4-7/8" Extended Lip ANSI Strike

EST102 - 630
EST115 - 630
EST125 - 630
EST158 - 630
EST175 - 630

Don-Jo - *Architectural Accessories*

AR335630
Use with levers on 1 3/8" door
(2 per pack)
3-1/2" Diameter
Finish - 630

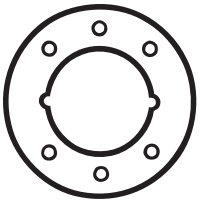

BF161SL
Covers up to 2 1/8" Hole
2-5/8" Diameter
Finish - Silver Coated

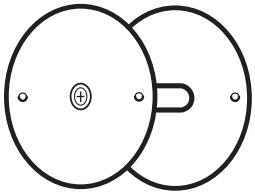

BF178SL
Covers up to 1 1/2" Hole
1-7/8" Diameter
Finish - Silver Coated

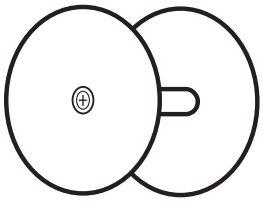

CV86PC
Converts 86
Cut out to 161
8" x 1-1/4"
Finish - Prime Coated

DSP135630
Scar Plate
Fits under Deadbolt
Collars 3-1/2" OD, 1-1/2" ID
Finish 630

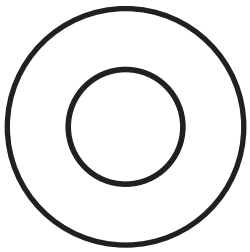

EF86PC
86 cut out
8" x 1 1/4" x 3/16"
Finish - Prime Coated

EF161
Filler Plate
2-1/4" x 1-1/8"

EF161SPC
Filler Plate
2-3/4" x 1-1/8"
Cut out
Finish - Prime Coated

FF45PC
Frame hinge cut out
4-1/2" x 1-5/8"
Finish - Prime Coated

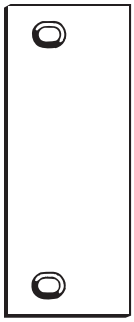

FS260PC
ANST strike cut out
Finish - Prime Coated
4-7/8" X 1-1/4"

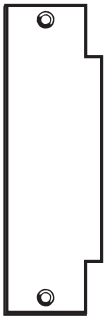

HF45PC
Door hinge cut out
4-1/2" x 1-3/4"
Finish - Prime Coated

SHF45PC
4-1/2" x 1-1/2"
Finish - Prime Coated

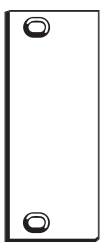

HS060
16 (.060) Gauge Hinge shime

HS090
13 (.090) Gauge Hinge shime
Finish - Prime Coated

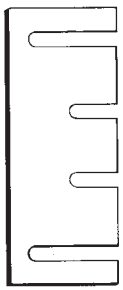

SP135630
Scar Plate
Fits under Rose or
Key in knob or Deadbolt
3-1/2" OD, 2-1/8" ID
Finish 630

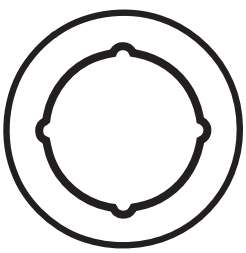

TB215
TAB
Finish - Zinc Plated
1" X 1-1/2"

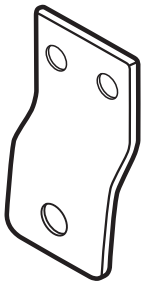

Don-Jo - *Remodel Plates*

RP-13509

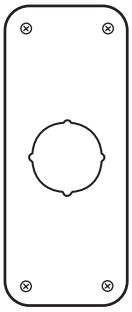

RP-13509-2

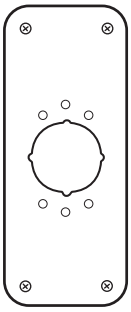

RP-13515

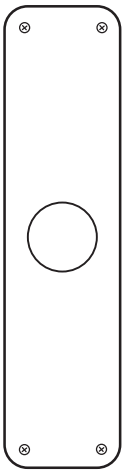

RPK-109

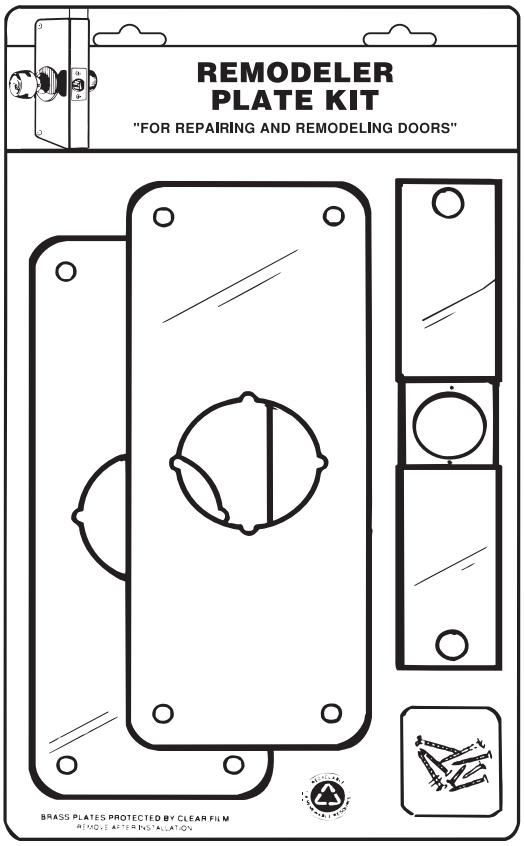

RP-13545

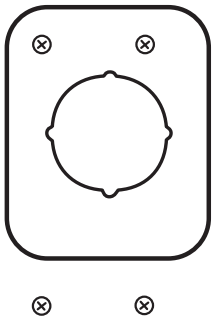

RP-13545-2

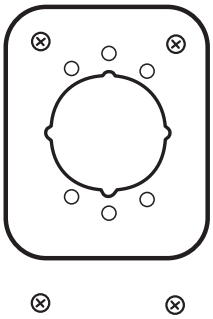

Stocked Product

Item	Size	Finishes
RP-13509	3-1/2" x 9"	630 (stainless)
RP-13509-2	3-1/2" x 9"	630 (stainless)
RP-13515	3-1/2" x 15"	630 (stainless)
RP-13545	3-1/2" x 4-1/2"	630 (stainless)
RP-13545-2	3-1/2" x 4-1/2"	630 (stainless)
RPK-109	3-1/2" x 9"	605 (polished brass) 630 (stainless steel)

Don-Jo
Lock Guard Plates

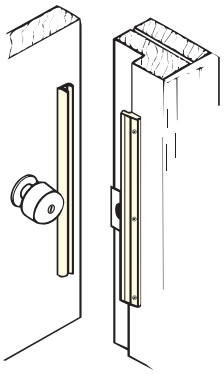

ILP206 / ILP212

The INTERLOCK for inswinging doors

- 6” version for use with key-in-knob and deadbolt locks
- 12” version for use with Mortise Locks, Simplex 1000 series,Alarm Lock DL-2500, DL-2700 & 3000, Card Access Systems, etc.

Stocked Product
ILP206 6”
ILP212 12”

Finishes:
DU (Duro Coated)
SL (Silver Coated)

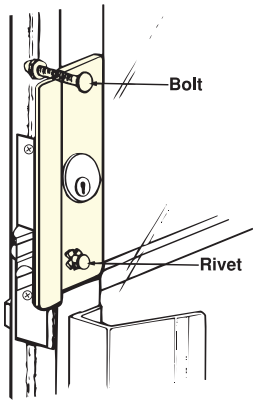

LP307

For ALUMINUM ENTRANCE doors

- Reversible
- Fits over cylinder - lock removal NOT required
- Hand carriage bolt and rivet supplied
- No specific tools required
- 3/8” offset, Display Package Size - 4” x 12”

Stocked Product
LP307 2-5/8” x 7” x 3/8”

Finish:
SL (Silver Coated)

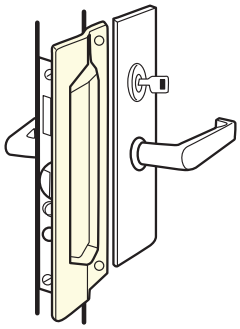

MLP111 / MLP211

For OUTSWINGING DOORS - completely covers the strike plate

- Furnished with carriage bolts, washers & acorn cap nuts for safety and strengths

Stocked Product
MLP111 3” x 11”
Finish: 630 (Stainless)

MLP211 3” x 11”
Finish: SL (Silver Coated)

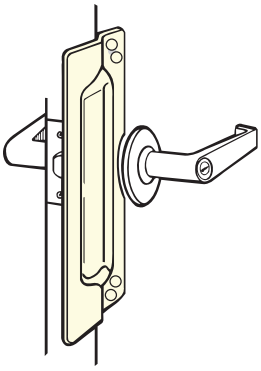

LP111 / LP211

For Outswinging Doors Completely Covers Strike Pate

- Furnished with carriage bolts, washers & acorn cap nuts for safety and strength
- Fits 2 3/4” and 2 3/8” backsets

Stocked Product
LP111 3” x 11”
Finish: 630 (Stainless)

LP211 3” x 11”
Finish: DU (Duro Coated)
Finish: SL (Silver Coated),

Don-Jo

Lock Guard Plates

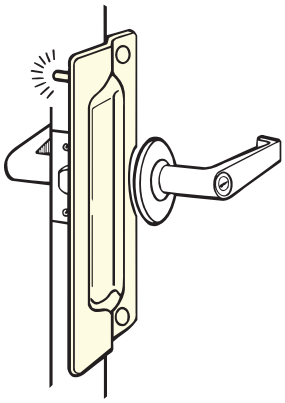

PLP111 / PLP211

Pin Latch protectors for OUTSWINGING DOORS

- Solid steel pin prevents spreading of door from frame
- Pin is welded on back leaving no visible point of attack from outside
- Fits 2 3/4" and 2 3/8" backsets

Stocked Product
PLP111 3" x 11"
Finish: 630 (Stainless)

PLP211 3" x 11"
Finish: 626

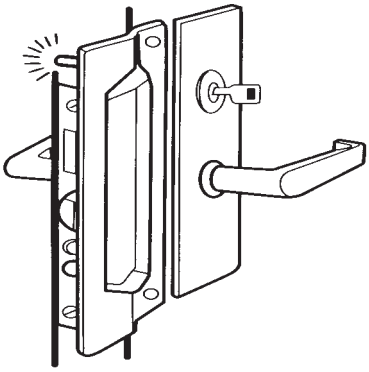

PMLP111

Pin Latch protectors for OUTSWINGING DOORS

- Solid steel pin prevents spreading of door from frame
- Pin is welded on back leaving no visible point of attack from outside

Stocked Product
PMLP111 3" x 11"
Finish: 630 (Stainless)

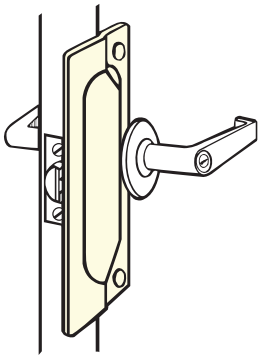

LP107 / LP207

For OUTSWINGING DOORS

- Furnished with carriage bolts, washers & acorn cap nuts for safety and strength

Stocked Product
LP107 2-3/4" x 7"
Finish: 630 (Stainless)

LP207 2-3/4" x 7"
Finishes:
DU (Duro Coated)
SL (Silver Coated)

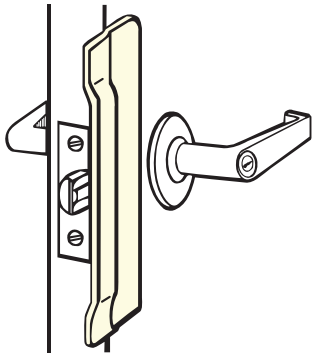

CLP110

For COMMERCIAL TYPE for outswinging doors

- 6" for key-in-knobs
- 10" for Mortise Locks
- Architectural design
- Concealed welded studs with fasteners

Stocked Product
CLP110 2-1/8" x 10"
Finish: 630 (Stainless)

Don-Jo
Lock Guard Plates

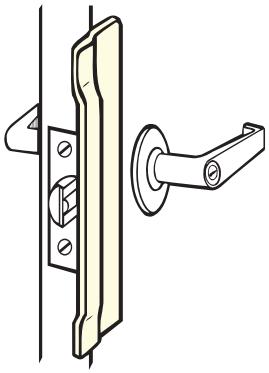

NLP-210
NARROW COMMERCIAL TYPE for outswinging doors

- 6” for key-in-knobs
- 10” for Mortise Locks
- Narrow type for outswinging doors

Stocked Product
NLP210 1-1/2” x 10”

Finish: SL (Silver Coated)

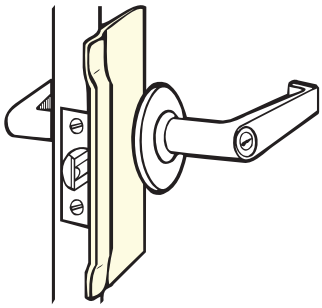

BLP107/BLP207
For KEY-IN-LEVER Locks with up to 3-3/4” ESCUTCHEON

- Works with up to 3 3/4” rose
- Concealed welded studs with fasteners

Stocked Product
BLP107 3-1/4” x 7”
Finish: 630 (Stainless)

BLP207 3-1/4” x 7”
Finish: SL (Silver Coated)

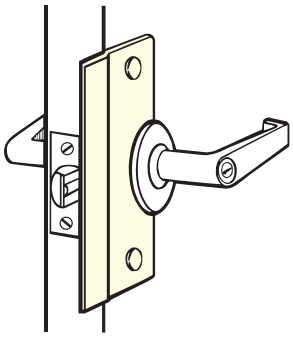

SLP206
SHORT TYPE for outswinging doors

- Furnished with carriage bolts, washers & acorn cap nuts for safety and strength
- May be used on hollow metal door/frame using ANSI strike
- Works with up to 3 3/4” roses

Stocked Product
SLP206 2 5/8” x 6”

Finishes:
DU (Duro Coated)
SL (Silver Coated)

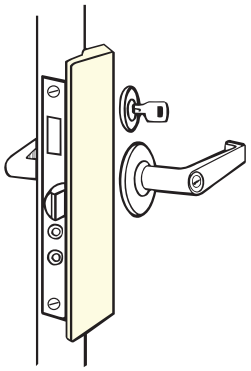

LP2878
SLIMLINE for outswinging doors

- Fasteners included
- Sleek appearance

Stocked Product
LP2878 1-1/2” x 8-7/8”

Finish:
SL (Silver Coated)

Don-Jo - *Decal*

Decal

HD-1
4" x 4"
White on Blue

THIS DOOR TO REMAIN UNLOCKED DURING BUSINESS HOURS

DD-1/DD-2

THESE DOORS TO REMAIN UNLOCKED DURING BUSINESS HOURS

DD-3/DD-4

1 1/2" x 24"

DD1 Black on Clear
DD2 White on Black

DD3 Black on Clear
DD4 White on Black

THIS DOOR TO REMAIN UNLOCKED WHILE BUILDING IS OCCUPIED

DD-5/DD-6

THESE DOORS TO REMAIN UNLOCKED WHILE BUILDING IS OCCUPIED

DD-7/DD-8

1 1/2" x 24"

DD5 Black on Clear
DD6 White on Black

DD7 Black on Clear
DD8 White on Black

Don-Jo - *Architectural Accessories*

#K0050

ANSI J102 Metal

Used on doors subject to marring

or damage from foot traffic.

ANSI

COMMERCIAL KICK PLATES

- Individually packaged with screws
- Fully threaded to the head stainless steel sheet metal screws plated to finish
- Beveled, 4 edged (B4E)
- Commercial grade thickness
- Kick plate screws only
  Specify 9DJOKPS + FINISH

Stocked Product

P/N	Size	Finishes
K0050	6" x 34"	630
K0050	8" x 30"	630
K0050	8" x 34"	605, 613, 630
K0050	10" x 30"	630
K0050	10" x 32"	630
K0050	10" x 34"	605, 613, 628, 630
K0050	10" x 40"	605, 613, 630
K0050	10" x 46"	630
K0050	12" x 34"	630
K0050	36" x 34"	630
KPS605	Kickplate screws 605, 613, 630	

ARMOR PLATES

- Commercial grade thickness
- Stainless Steel 630
- 36"x 34" Stock

KICK PLATE

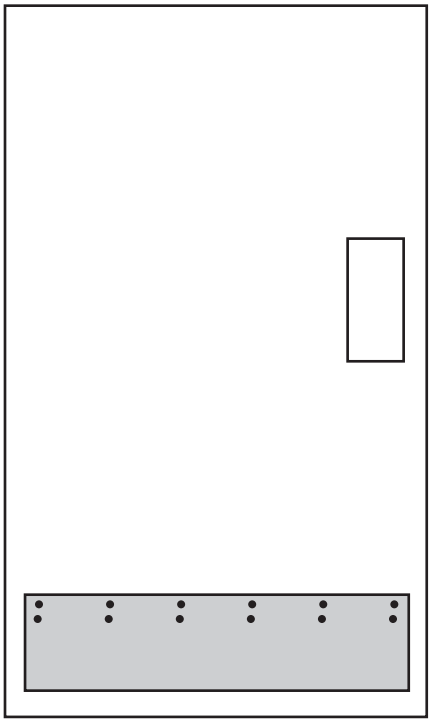

ARMOR PLATE

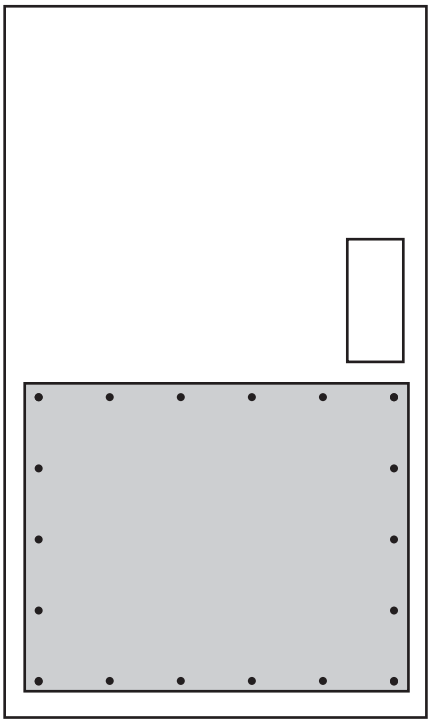

Don-Jo

Wrap Around

The Classic Wrap-Around advantage includes:

22(.32) Gauge

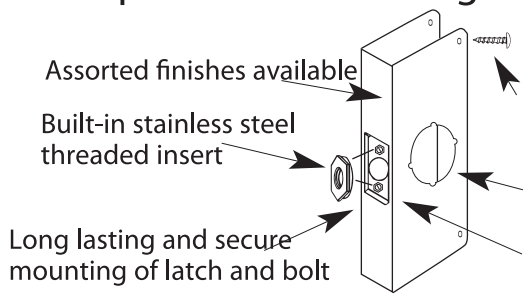

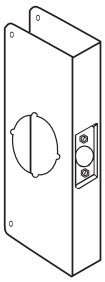

Model 3, 4

For CYLINDRICAL DOOR LOCKS with 2 1/8" hole

#	BACKSET	DOOR	DIMENSIONS
3	2-3/4"	1-3/8"	4-1/4" x 9"
4	2-3/4"	1-3/4"	4-1/4" x 9"

Stocked Product
Finishes:
Polished Brass (PB)
Stainless Steel (S) (Model 3 only)

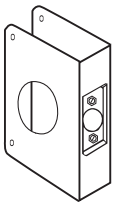

Model 8

For DEADBOLTS with 1 1/2" hole

BACKSET	DOOR	DIMENSIONS
2-3/4"	1-3/4"	4-1/4" x 4-1/2"

Stocked Product
Finishes:
Polished Brass (PB)
Stainless Steel (S)

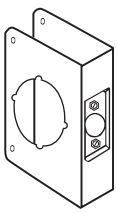

Model 61, 81

For CYLINDRICAL DOOR LOCKS with 2 1/8" hole

#	BACKSET	DOOR	DIMENSIONS
61	2-3/8"	1-3/4"	4" x 4-1/2"
81	2-3/4"	1-3/4"	4-1/4" x 4-1/2"

Stocked Product
Finishes:
Polished Brass (PB)
Stainless Steel (S)

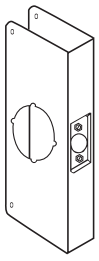

Model 12

For CYLINDER DOOR LOCKS with 2 1/8" hole, 12" height

BACKSET	DOOR	DIMENSIONS
2-3/4"	1-3/4"	4-1/4" x 12"

Stocked Product
Finishes:
Polished Brass (PB)
Stainless Steel (S)

Don-Jo
Wrap Around

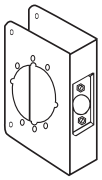

Model 81-2
For use with HEAVY DUTY GRADE 1 & GRADE 2 key-in-levers

BACKSET	DOOR	DIMENSIONS
2-3/4”	1-3/4”	4-3/4” x 4-1/2”

Stocked Product
Finishes:
Polished Brass (PB)
Stainless Steel (S)

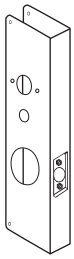

Model 15
Fits SIMPLEX/UNICAN 1000 SERIES & 4000 SERIES

BACKSET	DOOR	DIMENSIONS
2-3/4”	1-3/4”	5” x 15”

Stocked Product
Finishes:
Stainless Steel (S)

Model 5000
Fits SIMPLEX/UNICAN 5000 SERIES

BACKSET	DOOR	DIMENSIONS
2-3/4”	1-3/4”	5” x 15”

Stocked Product
Finishes:
Stainless Steel (S)

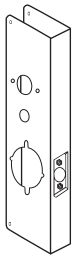

Model 27
Fits ALARM LOCK 2700/T2 & 3000 SERIES TRYOLOGY LOCK

BACKSET	DOOR	DIMENSIONS
2-3/4”	1-3/4”	5” x 15”

Stocked Product
Finishes:
Stainless Steel (S)

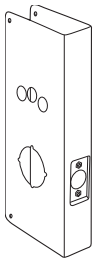

Model 18
Fits SCHLAGE COBRA LOCKS

BACKSET	DOOR	DIMENSIONS
2-3/4”	1-3/4”	5” x 15”

Stocked Product
Finishes:
Stainless Steel (S)

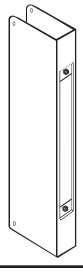

Model 504
MORTISE LOCK wrap-around plate for 86 cut-out

BACKSET	DOOR	DIMENSIONS
–	1-3/4”	5” x 12”

Stocked Product
Finishes:
Stainless Steel (S)

DOORS & SPECIALTIES CO.
COMMERCIAL DOORS • FRAMES • HARDWARE

CATEGORY	PRODUCT/DESCRIPTION	PAGE
LOCKS	Touch Screen Digital Lock	2-3
	Heavy Duty Commercial Cylindrical LHV Locks - Grade 1	4
	Standard Duty Commercial Cylindrical LSV Locks - Grade 2	5
	Medium Duty Commercial Cylindrical LDV Locks - Grade 2	6
	Residential Cylindrical ECL Latchset - Grade 3	7
	General Lock Information	8
LOCK/ACC.	Deadlatches and Spring Latches	9
	Strikes and Accessories	9
LOCKS	ASIL Adjustable - Simultaneous Retraction Interconnected Locks - Grade 2	10
	Deadbolts - Standard Duty Commercial Deadbolts - Grade 2	11
	Deadbolts - Standard Duty Solid Brass Deadbolts - Grade 2	12
	Heavy Duty Commercial Mortise Locks	13
	Mortise Locks - Function Chart	14
HANDING CHART	Handing Chart	15
EXITS	Heavy Duty Exit Device 700 Series - Grade 1	16
	Heavy Duty Vertical Rod Exit Device 700 Series - Grade 1	17
	Heavy Duty Vertical Rod Fire Rated Less Bottom Rod 700 Series - Grade 1	18
EXIT/TRIM	Escutcheon Levers	19
	Pull & Thumbpiece	19
EXIT/ACC. 700	Glass Bead Shim Kit - 700 Series	20
	Overlapping Strike - 700 Series	20
	Firebolt - 700 Series	20
	Exit Alarm Kit - 700 Series	20
EXITS	Exit Device - Standard Duty Commercial Rim 500 Series	21
	Exit Device - Standard Duty Commercial Surface Vertical Rod 500 Series	22
EXIT/TRIM	Exit Device Trim	23
	Pull Trim	23
EXIT/ACC. 500	Exit Device Alarm Kit - 500 Series	23
	Exit Device Vertical Rod Extension - 500 Series	23
	Exit Device Vertical Rod Back Plate - 500 Series	23
MULLIONS	Mullions	24
CLOSERS	Heavy Duty Door Closers - DC40	25
	Heavy Duty Door Closers - DC851	26
	Standard Duty Door Closers - DC70	27
	Standard Duty Door Closer - DC161	28
	Standard Duty Door Closer - DC50	29
ELECT. HOLDER	Door Holder - Electro Magnetic	30
COORDINATORS	Coordinators & Mounting Brackets	31
AUTO FLUSH	Automatic Flushbolts - For Metal and Wood Doors	32
MANUAL FLUSH	Manual Flushbolts	33
DUST STRIKES	Dust Proof Strikes	34
HINGES	Full Line of Commercial and Residential Hinges	35-39
PLATES	Pushes and Pulls	40
	Kick Plates	40
GEN. H/W	Door Guards - Swing Bar Lock, Door Angle Protector, Door Guard Shim	41
	Viewers - Solid Cast Brass	41
	Door Holders	42
	Wall Stops	42
	Floor Stops	43
	Roller Latches	44
	Ball Catches	45
SIGNS	Wall & Door Signs / ADA	46
WARRANTY	Doormerica Warranty	47

Doormerica

DMH Touch - Touch Screen Digital Lock with Smart+ Prox Card

Features:

- Stand-alone Touchscreen responds to human touch enabling convenient entrance or access to programming menu. After operation has been completed, the lock reverts to sleep mode.
- Grade 1 lockset with electronic modern touch screen.
- Easy programmable menu.
- Smart+ Prox card compatible - slim “no slot” design.
- Convenient wake-up button illuminates and activates easy to read key pad.
- Low battery indicator.
- Allows up to 1,000 individual user codes and credentials.
- Free wheeling lever mechanism.
- 9 volt battery terminal for emergency power supply.
- Saturn lever design.
- Allows continuous entry for non-restricted traffic.
- Non-handed, field reversible.
- Wake-up Button activates and illuminates the number pad for PIN code and Prox Card entry.
- Includes 2 Smart+ Prox Cards. Additional cards available.

Continue to next page

CODE COMPLIANCE:

- ANSI/BHMA - Certified ANSI/BHMA A156.2 Series 4000, Grade 1 strength and operational requirements.
- A.D.A. - All levers conformed to ADA requirement for barrier-free accessibility.
- UL/cUL - UL listed to USA and Canadian safety standards listed for 3 hour doors. Letter F and UL symbol latch fronts indicate listing.
- Positive Pressure - Meets UL 10C and UBC 7-2(1997)
- California State Reference Code - Levers with less than 1/2”(13mm) returns comply : Levers returns to within 1/2”(13mm) door face.

WARRANTY - ONE YEAR FROM DATE OF INSTALLATION

Stocked Product

Item	Finish
DMH Touch Lock	10A, 26D
DMH Smart+ Prox Card	

DMH Touch - Touch Screen Digital Lock (Continued from previous page)

Specifications:

- **User PIN Code**
  1,000 individual users codes + credentials
- **Smart+ Prox Card**
  - Compatible with existing MIFARE infrastructures
  - Operates at 13.56 MHz in accordance with ISO14443A
  - Inductive Distance up to 1-3/16"(~30mm)
  - PVC 1/32" x 2-1/8" x 3-3/8"(.076mm x 54mm x 85.6mm)
- **Handing**
  Non-Handed, Field reversible levers
- **Lever mechanism**
  Free wheeling lever mechanism. When the outside lever is locked, it will rotate freely up and down while remaining securely locked.
- **Door thickness**
  1-3/8"~2"(35mm~51mm) standard
- **Backset**
  2-3/4"(70mm) standard or 2-3/8"(60mm) special order
- **Face plate**
  1-1/8" x 2-1/4" (28mm x 57mm) square corner, beveled, for 2-3/4"(70mm) backset standard
  1" x 2-1/4"(25mm x 57mm) square corner, beveled, for 2-3/8"(60mm) backset optional
- **Strike**
  ANSI Curved lip strike 1-1/4" x 4-7/8" x 1-3/16"(32mm x 124mm x 30mm) lip to center standard. Optional ("T", "Full-lip") strike available on request.
- **Exposed Trim**
  Lever: pressure cast zinc, plated to match finish symbols. All metal escutcheon provide quality and durability.
- **Latch bolt**
  1/2"(13mm) throw solid brass, deadlocking on keyed function.
- **Lever design**
  Saturn
- **Cylinder**
  6-pin solid brass "Schlage C" keyway standard with two brass keys per lock.
- **Finish**
  US10A/US26D
  Other finishes available with lead time.
- **Power source**
  Powered by 4 AA Alkaline battery with optional hardwire. 9 volt battery terminal for emegency power supply.
- **Environmental performance**
  Weather resistant
  Temperature ranging from -30°F~150°F(-30°C~+66°C) at 85% relactive humidity.

Programming Functions:

- **Master PIN code**
  It is used for programming and register some kinds of PIN codes. It can open door and factory default setting.
- **User PIN code**
  It can open door and registered up to 1,000 codes, 3-6 digits.
- **One-time user PIN code**
  It can only be used once and the PIN code information is deleted automatically after use.
  It can be registered up to 3 different codes, 3-6 digits.
- **Manager PIN code**
  It can open the door with lockout mode and be used like User PIN code.
  It can be registered up to 3 different codes, 3-6 digits.
- **Smart+ Prox Card**
  It can be registered with each registration number(No.1~999) consecutively by Master PIN code.
  If not needed anymore, delete registration number only.
- **Passage Mode**
  Enabling Passage mode allows continuous entry for non-restricted traffic. Passage mode enabled or disabled through feature programming by either the Master or Manager PIN code. When the unit is in Passage Mode, the unlocked padlock icon will appear on the screen.
- **Lock-out Mode**
  This feature is enabled by either the Master or Manager PIN Codes. When enabled, it restricts all User PIN Code access except Master and Manager PIN Codes. When the unit is in Lock-out, the padlock will appear on the screen.
- **Low Battery**
  When battery power is low, the low battery icon will begin blinking. If battery power is completely lost, the key and cylinder can be used or the 9 volt battery terminal can be used for emegency power.
- **Auto Re-lock time**
  After successful code entry and the units unlocks, it will automatically re-lock in a default of five (5) seconds.
  RE-lock time can be changed by either Master or Manager PIN code.
- **Sound Volume**
  Can be changed by either Master or Manager PIN code.
  The factory default is 2 Level. (Min1- Max3, Mute4).

Stocked Product

Item	Finish
DMH Touch Lock	10A, 26D
DMH Smart+ Prox Card	

Doormerica

LHV - Heavy Duty Commercial Cylindrical Locks-Grade 1

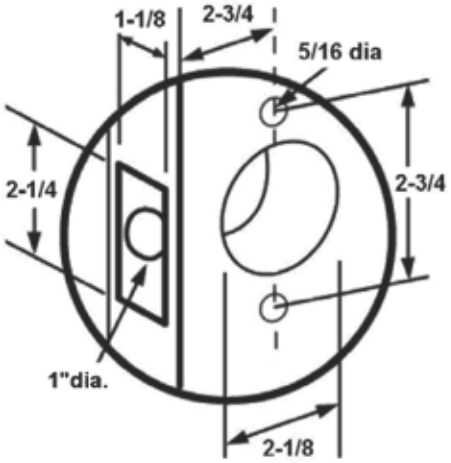

Features:

- Non-Handed and Reversible.
- 2-3/4" Backset, 1-1/8"x 2-1/4" Face Plate, UL 3 Hour Fire Listed Stainless Steel Latch or Dead-latch.
- 1-1/4" x 4-7/8" ANSI Strike.
- Schlage "C" 6 Pin Keyway Standard.
- Saturn Lever Trim.
- Barrier Free and Returns within 1/2" from the Door Face.
- Door Thickness 1-3/4" -2"

Options:

- CL -Clutch Function -Lever Rotates without Unlatching Lock.
- IC -Small format Interchangeable Core available. Core NOT included.
- PLKLHVSL238 -2-3/8" Backset, Spring Latch. (SOLD SEPERATELY)
- PLKLHVDL238 -2-3/8" Backset. Dead Latch. (SOLD SEPERATELY)

CODE COMPLIANCE:

- ANSI A156.2 Grade 1. UL10C and UBC 7.2 for positive pressure.
- ANSIA117.1 and ADA for barrier-free accessibility
- C-UBC -California Amended Uniform Builders Code -2001
- NFPA-80 -National Fire Protection -1999
- NFPA-101 National Fire Protection-Life Safety 2000

LIMITED LIFETIME WARRANTY

Stocked Product

Item	Style	Finish
LHV10, LHV40, LHV50, LHV53, LHV70, LHV80, LHV170	Saturn	10B, 26D
LHV10, LHV40, LHV50, LHV53, LHV70, LHV80, LHV170	Sparta	10B, 26D
LHV53, LHV70, LHV80 IC core less core	Saturn	26D
LHV50, LHV53, LHV70, LHV80 IC core less core	Sparta	26D
LHVCL53, LHVCL70, LHVCL80 Clutch	Saturn	10B, 26D
LHVCL53, LHVCL70, LHVCL80 Clutch	Sparta	26D
LHVCL53, LHVCL70, LHVCL80 IC With clutch	Saturn	26D
LHVCL53, LHVCL70, LHVCL80 IC With clutch	Sparta	26D

LSV - Standard Duty Commercial Cylindrical Locks-Grade 2

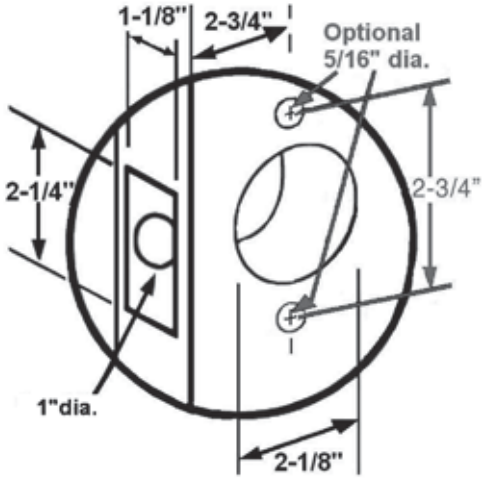

Features:

- Non-Handed and Reversible.
- 2-3/4" Backset, 1-1/8" x 2-1/4" Face Plate, UL 3 Hour Fire Listed Stainless Steel Latch or Dead-latch.
- 1-1/4" x 4-7/8" ANSI Strike.
- Schlage "C" 6 Pin Keyway Standard.
- Barrier Free & Returns within 1/2" from Door Face.
- Saturn and Sparta Lever Trim.
- Door Thickness 1-3/8" -1-3/4"
- RTB-Removable thru bolts supplied but NOT installed.

Options:

- CL -Clutch Function -Lever Rotates without unlatching the door
- IC -Small format Interchangeable Core available. Core NOT included.
- PLSVSL238 2-3/8" Backset Spring Latch. (SOLD SEPERATELY)
- PLSVDL238 2-3/8" Backset Dead Latch. (SOLD SEPERATELY)
- Suffix "1" -1" x 2-1/4" Latch Face Plate.
- PLKEXT5 -Extension for 5" Backset.

CODE COMPLIANCE:

- ANSI A156.2 Grade 2. UL10C and UBC 7.2 for positive pressure.
- ANSIA117.1 and ADA for barrier-free accessibility
- C-UBC -California Amended Uniform Builders Code -2001
- NFPA-80 National Fire Protection Assoc.-1999
- NFPA-101 National Fire Protection-Life Safety 2000

LIMITED LIFETIME WARRANTY

Stocked Product

Item	Style	Finish
LSV10, LSV20, LSV40, LSV53, LSV70, LSV80, LSV170	Saturn/Sparta	26D
LSV10, LSV40, LSV53, LSV80	Saturn/Sparta	US3, 10B, 26
LSV20	Saturn	10B
LSV53, LSV70, LSV80 IC core less core	Saturn	26D
LSV53, LSV70, LSV80 clutch	Saturn	10B, 26D
LSV70	Saturn	10B, 26
LSV70	Sparta	US3, 10B, 26
LSV170	Saturn	US3, 10B, 26
LSV170	Sparta	10B, 26

Doormerica

LDV - Medium Duty Commercial Cylindrical Locks-Grade 2

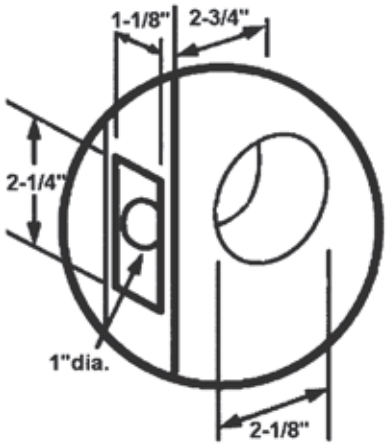

Features:

- Non-handed and reversible
- 2-3/4" backset, 1-1/8" x 2-1/4" face plate
- PLKASA -4-7/8" x 1-1/4" ANSI strike
- Schlage "C" 6 pin keyway standard
- Saturn lever trim
- Barrier free and returns within 1/2" from the door face
- Door thickness 1-3/8" -1-3/4"

Options:

- PLSVSL238 -2-3/8" backset, spring latch (SOLD SEPERATELY)
- PLSVDL238 -2-3/8" backset, dead latch (SOLD SEPERATELY)
- 1" x 2-1/4" latch & dead-latch available
- PLKFL -2-1/4" x 1-1/4" full lip strike (SOLD SEPERATELY)
- PLKT -2-3/4" x 1-1/4" - "T" strike (SOLD SEPERATELY)

CODE COMPLIANCE:

- ANSI A156.2 Grade 2. UL10C and UBC 7.2 for positive pressure.
- ANSIA117.1 and ADA for barrier-free accessibility
- C-UBC -California Amended Uniform Builders Code -2001
- NFPA-80 National Fire Protection Assoc.-1999
- NFPA-101 National Fire Protection-Life Safety 2000

1 YEAR LIMITED WARRANTY

Stocked Product

Item	Style	Finish
LDV10,LDV20,LDV40,LDV53,LOV70,LDV80,LDV170	Saturn/Sparta	26D

ECL - Residential Cylindrical Latchset-Grade 3

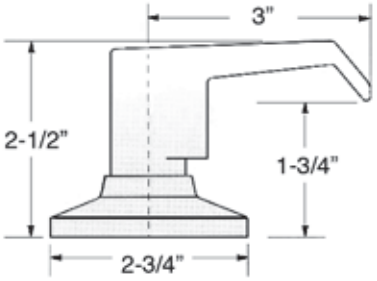

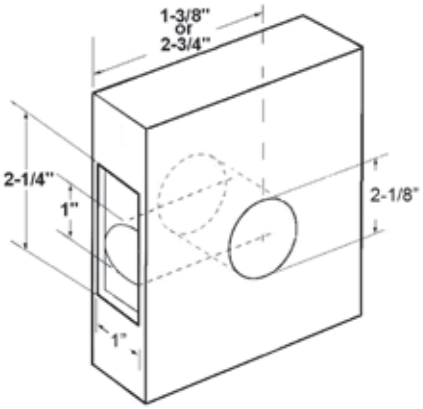

Features:

- Non-handed and reversible
- PECL-SIADJ -Adjustable backset, 2-3/8' or 2-3/4"
- 1" x 2-1/4" faceplate spring latch
- PLKT-2-3/4" x 1-1/4" -"1" strike
- LEV lever trim only
- Barrier free
- Door thickness 1-3/8" -1-3/4"

Options:

- PLKFL -2-1/4" x 1-1/4" full lip strike (SOLD SEPERATELY)
- PLKASA -4-7/8" x 1-1/4" ASA strike (SOLD SEPERATELY)

CODE COMPLIANCE:

- ANSIA117.1 and ADA for barrier-free accessibility
- NFPA101 National Fire Protection-Life Safety 2000

1 YEAR LIMITED WARRANTY

Functions:

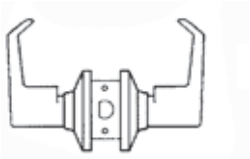

ECL10 Passage
- Latch by lever either side.
- Both levers always free.

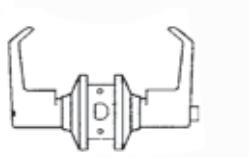

ECL40 Privacy
- Latch by lever either side.
- Outside lever locked by push button.
- Outside lever unlocked by emergency release or by rotating inside lever. Inside lever always free.

ECL170 Dummy
- Lever acts as pull only.
- No operation.

Stocked Product

Item	Design	Finish
ECL10, ECL40, ECL170	LEV	10B, 26D, US3

Doormerica

Lock - General Information

LEVER DIMENSIONS		A	B	C	D	E
LHV - SAT - SATURN	Grade 1	4-15/16	2-1/2	3-9/16	5/8	1/2
LHV - SPA - SPARTA	Grade 1	4-31/32	2-17/32	3-1/2	5/8	1/2
LSV - SAT - SATURN	Grade 2	4-5/8	2-1/2	3-3/8	11/16	1/2
LSV - SPA - SPARTA	Grade 2	4-17/32	2-7/16	3-5/16	11/16	1/2
LDV - SAT - SATURN	Grade 2	4-5/16	2-1/2	2-15/16	1/2	1/2
LDV - SAT - SPARTA	Grade 2	4-17/32	2-7/16	3-5/16	11/16	1/2

SAT - Saturn

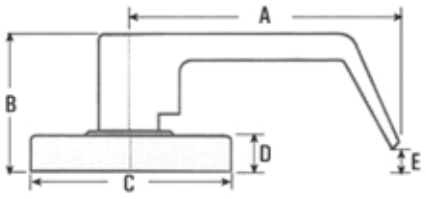

SPA - Sparta

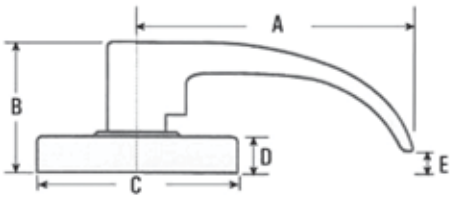

	FUNCTION	ANSI	DESCRIPTION	GRADE 1	GRADE 2
	10	Passage F75	Both levers always free	LHV10	LSV10
	20	Exit	Blank plate on outside. Inside lever always free	LHV20	LSV20
	40	Privacy F76	Push button locking from inside. Lock can be opened from outside with narrow flat-head screw driver or rotating inside lever	LHV40	LSV40
	50	Office	Entrance/Office Lock. Push-button locking. Push-button locks outside lever until unlocked with key or by rotating inside lever.	N/A	LSV50
	53	Entrance F82	Pushing inside button locks outside trim requiring key to unlock. Pushing and twisting button locks outside lever and always requires a key to unlatch. Inside lever always allows free egress	LHV53	LSV53
	70	Class-room F84	Outside lever locked or unlocked by key. Inside lever always allows free egress	LHV70	LSV70
	80	Store-room F86	Outside lever always locked. Key unlatches only. Inside lever always allows free egress	LHV80	LSV80
	170	Dummy	Dummy trim for one side of door	LHV170	LSV170

Options:

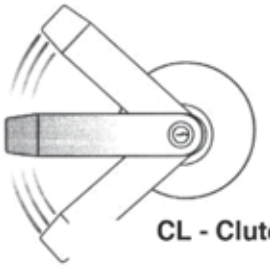

CL - Clutching Lever

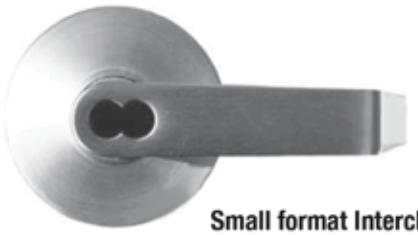

Small format Interchangeable available. Core NOT included.

Lock - General Accessories
Deadlatches and Spring Latches

PLSVSL238
GRADE 2

PLHVSL238
GRADE 1
2-3/8" Backset
Spring Latch

PLSVDL238
GRADE 2

PLHVDL238
GRADE 1
2-3/8" Backset
Dead Latch

PLSVSL234
GRADE 2

PLHVSL234
GRADE 1
2-3/4" Backset
Spring Latch

PLSVDL234
GRADE 2

PLHVDL234
GRADE 1
2-3/4" Backset
Dead Latch

Stocked Product

Item	Finish
PLHV latches	10B,26D
PLSV latches	US3,10B,26D
Faceplate	Standard 1-1/8" x 2-1/4"
Optional Faceplate	1" x 2-1/4" stocked for LSV (DL and SL) In 2-3/4" and 2-3/8" BS PLEASE SPECIFY

Strikes and Accessories

PLKASA
4-7/8" x 1-1/4"
ASA

PLKT
2-3/4" x 1-1/4"
"T" Strike

PLKFL
2-1/4" x 1-1/4"
Full Lip Strike

PLSVEXT5
Extension for Backset

Stocked Product

Item	Finish
Strikes	US3, 10B, 26D

Doormerica

ASIL Adjustable -
Simultaneous Retraction Interconnected Grade 2 Locks

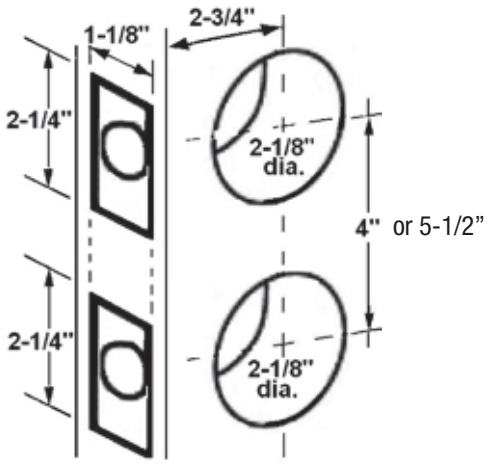

Features:

- LEVER -Saturn (SAT) Style with 4 -1/2" Length and Returns 1/2" from Door Face.
- ESCUTCHEON -6-7/8" x 2-5/8" Brass Interconnecting Plate
- LATCHBOLT -2-3/4" Backset, UL 3 Hour Fire Listed with 1/2" Throw. (2-3/8" Backset Optional) (SOLD SEPERATELY)
- DEADBOLT -2-3/4" Backset, 1" Throw Brass with Hardened Steel Pins.
  DEADBOLT ADJ. 2-3/8 -2 3/4
- PLKT -TLockset Strikes & 2-3/4 x 1-1/8" Latch Strike.
- PDBS -Deadbolt Strikes & 2-3/4 x 1-1/8" Deadbolt Strike.
- Schlage "C" 6 Pin Keyway. Other Keyways Available.
- ASIL CTC 4" or 5-1/2"

CODE COMPLIANCE:

- ANSI A156.12 Grade 2. UL10C and UBC 7.2 for positive pressure.
- ANSIA 117.1 and ADA for barrier-free accessibility.
- C-UBC -California Amended Uniform Builders Code-2001.
- NFPA-80-National Fire Protection Association 1999.
- NFPA101 National Fire Protection Association Life Safety -2000

LIMITED LIFETIME WARRANTY

Functions:

- SIL10 -Single Locking
  Deadbolt thrown or retracted by dead bolt key or inside thumb turn. Outside lever always retracts latch. Inside lever simultaneously retracts deadbolt and latch for immediate egress.

- SIL53 -Double Locking Deadbolt may be thrown or retracted by outside key or inside thumb turn. The lever may be locked or unlocked by key or rotating inside turn button. Turning inside lever always simultaneously retracts both deadbolt and latch for immediate egress.

Stocked Product

Item	Lever	Finish
ASIL10	Saturn	10B, 26D
ASIL10	Sparta	10B, 26D
ASIL53	Saturn	10B, 26D
ASIL53	Sparta	10B, 26D

700 Series - Standard Duty Commercial Deadbolt - Grade 2

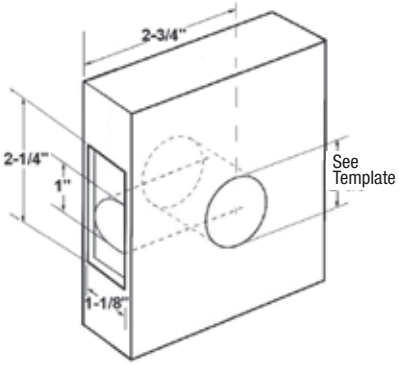

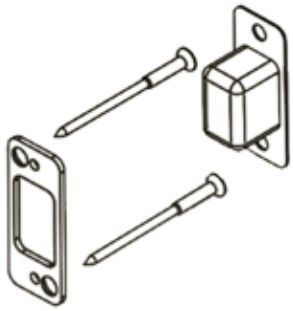

Wood Door Frame Reinforcer
(Concealed under strike/deeply anchored to jamb with 2 3" screws)

Features:

- Tested to exceed 150,000 operational cycles ANSI Grade 2 requirements for durability.
- 3" steel screws provide the added strength to prevent against break-in attacks for Wood Door. (Exclusive concealed wood frame reinforcer protects wood jambs from kick-in attacks.)
- 1" throw, high-strength deadbolt with hardened steel roller resists sawing and kick-in attacks.
- Standard dust box includes additional space inside strike box for true deadlatch. Provides deep anchoring and added strength.
- Concealed screws on double cylinder deadbolts for enhanced security and safety.

Specifications:

- Handing — Non-handed
- Door Thickness — 1-3/8" -1-3/4"
- Backset — 2-3/4" standard, 2-3/8" optional
- Faceplate — 1-1/8" x 2-1/4" standard
- Dead bolt — 1" throw with saw resistant hardened steel roller inserted
- Strike — 1-1/8" x 2-3/4" metal and wood strikes with strike reinforcement supplied standard
- Cylinder — 5 & 6 pin solid brass "Schlage C" keyway standard with two brass keys per lock
- Keyways — Available for all keyways of most major manufacturers

Options:

- SFIC (small format) interchangeable core and high security cylinders
- Compatible 6 or 7 pin cores with Best style
- Master keying, Grand master keying and construction keying

Functions:

DB751 Single Cylinder

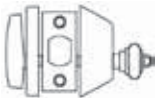

- Deadbolt thrown or retracted by key from outside or by turning inside turn.
- Bolt automatically deadlocks when fully thrown.

DB760 Double Cylinder

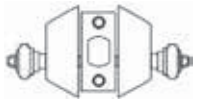

- Deadbolt thrown or retracted by key from either side.
- Bolt automatically deadlocks when fully thrown.

DB780 - Door Bolt

- Deadbolt thrown or retracted by turn only.
- **No through holes in door. Designed for half door preparation.**
- **Half bore is 1-5/8" (Do not bore through)**

CODE COMPLIANCE:

Meets ADA Requirements specifically designed for Barrier Free Application
ANSI/BHMA A 156.5 Series 4000, Grade 2 strength and operational requirements
UL listed to USA and Canadian safety standards listed for 3 hour doors
Meets UL 10C and UBC 7-2 (1997) Positive Pressure

LIMITED LIFETIME WARRANTY

Stocked Product

Item	Finish
DB751	US3, 10B, 15, 26, 26D
DB751 IC less core	10B, 26, 26D
DB760 (DBL CYL)	US3, 10B, 15, 26, 26D
DB760 (DBL CYL) IC less core	10B, 26, 26D
DB780	US3, 10B, 26, 26D

Doormerica

Solid Brass Standard Duty Deadbolts - Grade 2

DB251

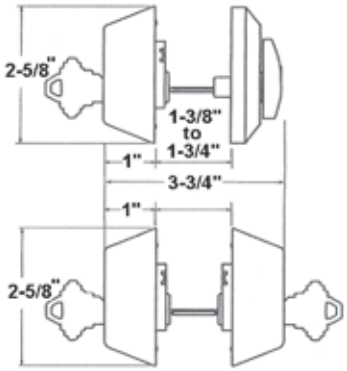

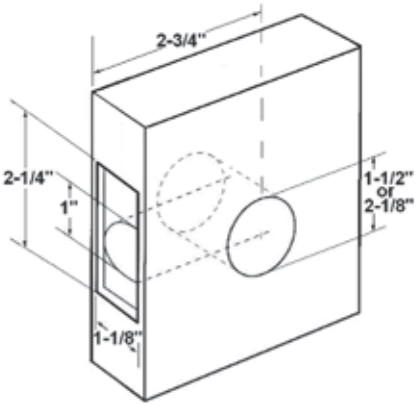

DB260

Features:

- Deadbolt has Hardened Steel Inserts to Prevent Sawing Through.
- Full 1"Throw Deadbolt.
- Adjustable Backset 2-3/8" or 2-3/4" Steel Bolt.
- PDB-S -2-3/4" x 1-1/8" Deadbolt Strike
- Schlage "C" 6 Pin Keyway Standard.
- Door thickness 1-3/8" -1-3/4"
- 1/4" Heavy Duty Gauge Thru Bolts.

Options:

- IC -Small format Interchangeable Core available. Core NOT included.
- NDBADJ Adjustable Deadbolt only.

Functions:

DB251 - Single Cylinder

- Deadbolt thrown or retracted by key from outside or by turning inside turn.
- Bolt automatically deadlocks when fully thrown.

DB260 - Double Cylinder

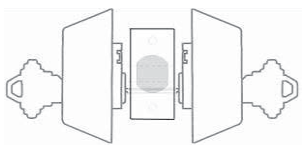

- Deadbolt thrown or retracted by key from either side.
- Bolt automatically deadlocks when fully thrown.

Functions:

DB280 - Door Bolt

- Deadbolt thrown or retracted by turn only.
- No through holes in door. Designed for half door preparation.
- Half bore is 1-5/8" (Do not bore through)

DB290 - Bolt & Plate

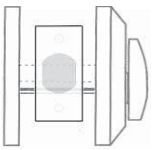

- Deadbolt thrown or retracted by turn only.
- Outside plate covers and mounts over standard deadbolt door Preparation.

1 YEAR LIMITED WARRANTY

Stocked Product

Item	Finish
DB251	US3,10B,26D,32D
DB251 IC less core	26D,32D
DB260 (DBL CYL)	32D
DB280	US3,10B,26,32D
DB290	US3,10B,32D
DBADJ (ADJ. BOLT ONLY)	10B, 26D

Heavy Duty Commercial Mortise Locks

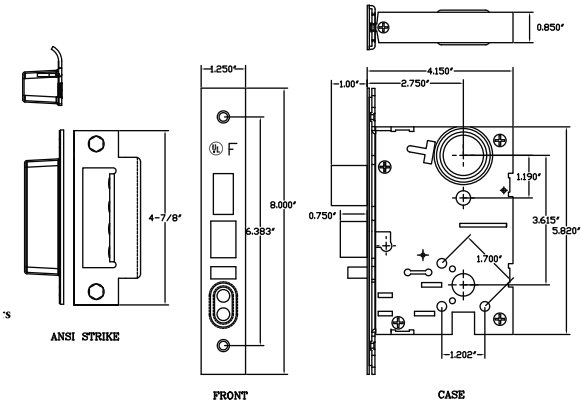

Features:

- Non Handed
- Stock 6 pin Schlage "C" keyway, drilled for construction keying
- Door thickness — 1-3/4" standard, other thicknesses available when specified
- Backset — 2-3/4 "
- Lock case — Heavy gauge plated steel
- Armored Front — Wrought stainless steel or brass- adjustable angle and attached by screws to the lock case front
- Dead bolt — 1" throw, stainless steel with hardened anti-saw pins
- Latch bolt — Stainless steel latch and anti-friction insert
- Guard bolt — Stainless steel
- Stop works — Push buttons- chrome plated brass
- Strike — Stainless steel or brass, 4-7/8" x 1-1/4" curved lip ANSI strike
- Handing — Handed, reversible in field
- UL Listings — UL listed, 3 hour fire doors, single and pairs
- ANSI Specification — Meets all Grade 1 security, operational, dimensional and cycling requirements of ANSI/BHMA A156.13 Series 1000, Lock body conforms to Federal Standatd FF-H-106 Type 86/87

Specifications:

Mortise Locks – ML series.
All locks or latches are provided with 3 hour listed stainless steel dead latch or spring latch. Lock chassis shall be stainless steel, steel bar and cold rolled steel case with ball-bearing roller retractors.

Options:

- Trim: 06, 17, 03, specify "A" for sectional trim
- Finish: US26D
- Available with "clutch type" lever, Specify ML "C". Note: Different template required. Clutch only available with 06 lever.

CODE COMPLIANCE:

- ANSI A156.13 Series 1000 Grade 1
- Listed UL10C and UBC 7.2 for positive pressure.
- ANSI A117.1 ADA Barrier-free Accessibility
- C-UBC California Uniform Builders Code -2001
- NFPA-80 National Fire Protection -1999
- NFPA-101National Fire Protection-Life Safety-2000

LIMITED LIFETIME WARRANTY

Doormerica

Heavy Duty Commercial Mortise Locks

For Sectional trim specify "A"

PICTURE	SERIES	FUNCTION	ANSI NUMBER	FUNCTION DESCRIPTION
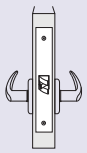	ML9010	Passage or Closet	F01	Latch bolt operated by lever from either side at all times.
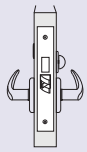	ML9040	Privacy or Bathroom	F19	Latch bolt operated by lever from either side. Dead bolt operated by turn from inside and emergency release from outside. Operating inside lever retracts both bolts.
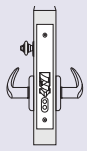	ML9050	Entry/ Office	F04	Latch bolt operated by lever from either side, except when outside lever is made inoperative by a stop or mechanical means other than key. When outside lever is locked, latch bolt is retracted by key from outside or by operating inside lever. ***Auxiliary dead bolt latch.
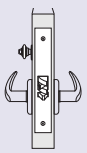	ML9070	Classroom	F05	Latch bolt operated by lever from either side, except when outside lever is locked from outside by key or push button mechanism. When outside lever is locked, latch bolt may be retracted by key, or by operating key or push button mechanism and outside lever from outside or by operating inside lever. ***Auxiliary dead bolt latch.
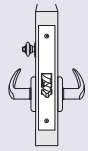	ML9080	Storeroom or Closet	F07	Latch bolt operated by key from outside or by rotating inside lever. Outside lever is always inoperative. ***Auxiliary dead bolt latch.
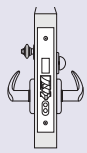	ML9453	Entranca/ Apartment/ Dormitory	F20	Latch bolt operated by lever from either side, except when outside lever is made inoperative by bush button rocker. Dead bolt projected by key from outside and by thumb turn from inside. Key outside operates both bolts. Operating inside lever retracts both bolts and outside remains locked. Latch bolt is deadlocked when outside lever is made inoperative or when the dead bolt is projected. When dead bolt is retracted, lever is unlocked by stop or mechanical means other than key.

Handing Chart

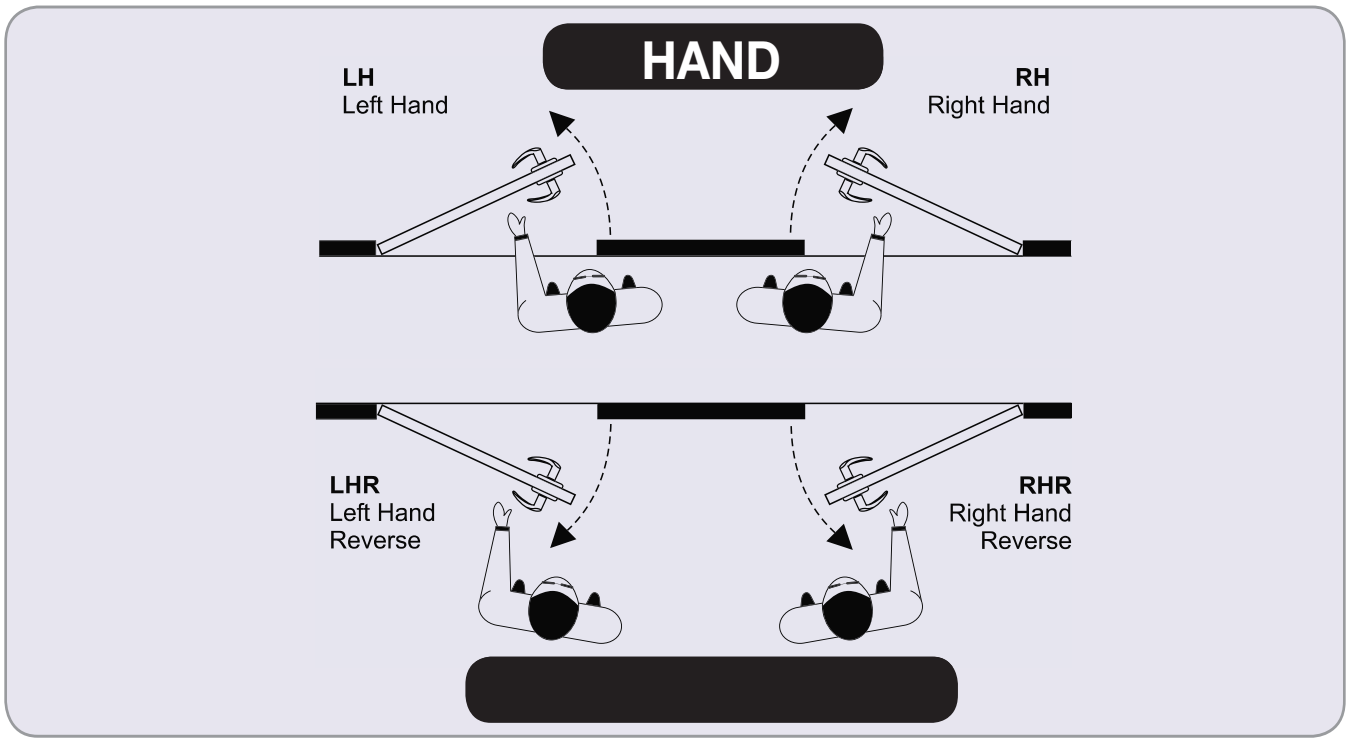

Doormerica

EDR701 / EDFR701 -
Heavy Duty Grade 1 Rim Exit Device

Features:

- Chassis mounted unit construction.
- Minimum style 4-1/2".
- Standard door thickness 1-3/4".
- For all doors up to 36".
- Universal design retrofits on Von Duprin 99 series & Sargent 88 Series.
- Material: Cover, and cap and rail are made of brass, bronze or stainless steel.
- 161 ANSI cutout.
- Mounting: Furnished with wood & machine screws. Thru bolts, standard on fire rated devices.
- Non Handed.
- Latch Bolt: Stainless Steel 3/4"

Dimensions:

Touchbar	Height to finish floor	41" at center
Touchbar	Projection	
	Neutral	2-1/2"
	Depressed	1-3/4"
Center case	.....	8-1/2" x 2-1/2" x 2"
Device Length	Standard	2'2" - 3'
	Long (L)	2'9" - 4'

Options:

- Stocked 48" length, specify "L"
- Available different functions. Lever escutcheon trims are Grade 1 construction with clutch free wheeling mechanism. Covers 161 cutout, see page 11.
- ALRMKIT700 Alarm Kit available for 3' & 4' applications.
- Glass Bead Kits available.

Specifications:

- All exit devices shall be of touch bar design with smooth operation and be operative over 2/3 of the door's clear opening width.
- All exit devices must be listed under "Panic Hardware" in the Accident Equipment List of Underwriter's Laboratories, Inc. Where labeled doors are used as exits, they must be equipped with labeled Fire Exit Hardware and UL 10C, UBC 7-2-1997 codes.
- All exit devices shall be of chassis mounted unit construction.

CODE COMPLIANCE:

- ANSI A165.3, Grade 1
- UL listed for Panic and UL 10C, UBC 7-2-1997 codes.
- UL listed for Fire Exit Hardware. 3 Hours.
- (A) label rating on pairs of doors up to 8'0" x 8'0" swinging in same or opposite directions.

LIMITED LIFETIME WARRANTY

Stocked Product

Item	Finish
EDR701	10B, 28, 32D
	36" & 48" length applications
EDFR701	10B, 28, 32D
	36" & 48" length applications

EDV701 / EDFV701 - Heavy Duty Grade 1 Vertical Rod Exit Device

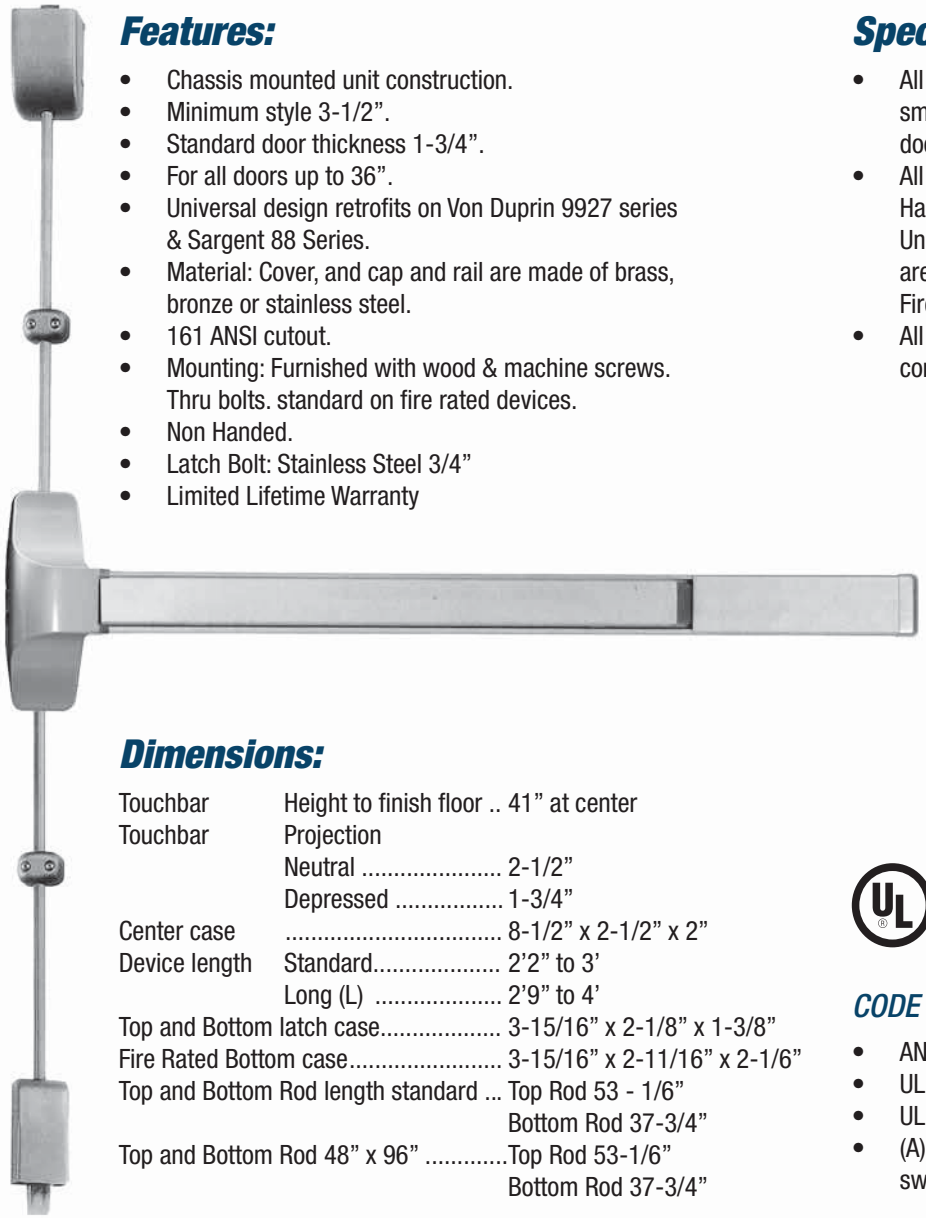

Features:

- Chassis mounted unit construction.
- Minimum style 3-1/2".
- Standard door thickness 1-3/4".
- For all doors up to 36".
- Universal design retrofits on Von Duprin 9927 series & Sargent 88 Series.
- Material: Cover, and cap and rail are made of brass, bronze or stainless steel.
- 161 ANSI cutout.
- Mounting: Furnished with wood & machine screws. Thru bolts. standard on fire rated devices.
- Non Handed.
- Latch Bolt: Stainless Steel 3/4"
- Limited Lifetime Warranty

Specifications:

- All exit devices shall be of touch bar design with smooth operation and be operative over 2/3 of the door's clear opening width.
- All exit devices must be listed under "Panic Hardware" in the Accident Equipment List of Underwriter's Laboratories, Inc. Where labeled doors are used as exits, they must be equipped with labeled Fire Exit Hardware and UL 10C, UBC 7-2-1997 codes.
- All exit devices shall be of chassis mounted unit construction.

Dimensions:

Touchbar	Height to finish floor ..	41" at center
Touchbar	Projection	
	Neutral	2-1/2"
	Depressed	1-3/4"
Center case	.....	8-1/2" x 2-1/2" x 2"
Device length	Standard.....	2'2" to 3'
	Long (L)	2'9" to 4'
Top and Bottom latch case.....		3-15/16" x 2-1/8" x 1-3/8"
Fire Rated Bottom case.....		3-15/16" x 2-11/16" x 2-1/6"
Top and Bottom Rod length standard ...		Top Rod 53 - 1/6"
		Bottom Rod 37-3/4"
Top and Bottom Rod 48" x 96"		Top Rod 53-1/6"
		Bottom Rod 37-3/4"

Options:

- Stocked 48" x 96" length, specify "L"
- Available different functions. Lever escutcheon trims are Grade 1 construction with clutch free wheeling mechanism.
  Covers 161 cutout.
- Alarm Kit available for 3' & 4' applications.
- Glass Bead Kits available.

CODE COMPLIANCE:

- ANSI A165.3, Grade 1
- UL listed for Panic and UL 10C, UBC 7-2-1997 codes.
- UL listed for Fire Exit Hardware. 3 Hours.
- (A) label rating on pairs of doors up to 8'0" x 8'0" swinging in same or opposite directions.

LIMITED LIFETIME WARRANTY

Stocked Product

Item	Finish
EDV701	10B, 28, 32D
	36"x 96", 48" x 96"
EDFV701	10B, 28, 32D
	36"x 96", 48" x 96"

DOORS & SPECIALTIES CO.
COMMERCIAL DOORS • FRAMES • HARDWARE

Doormerica

EDFV701 x LBR - Heavy Duty Grade 1 Vertical Rod Fire Rated - Less Bottom Rod

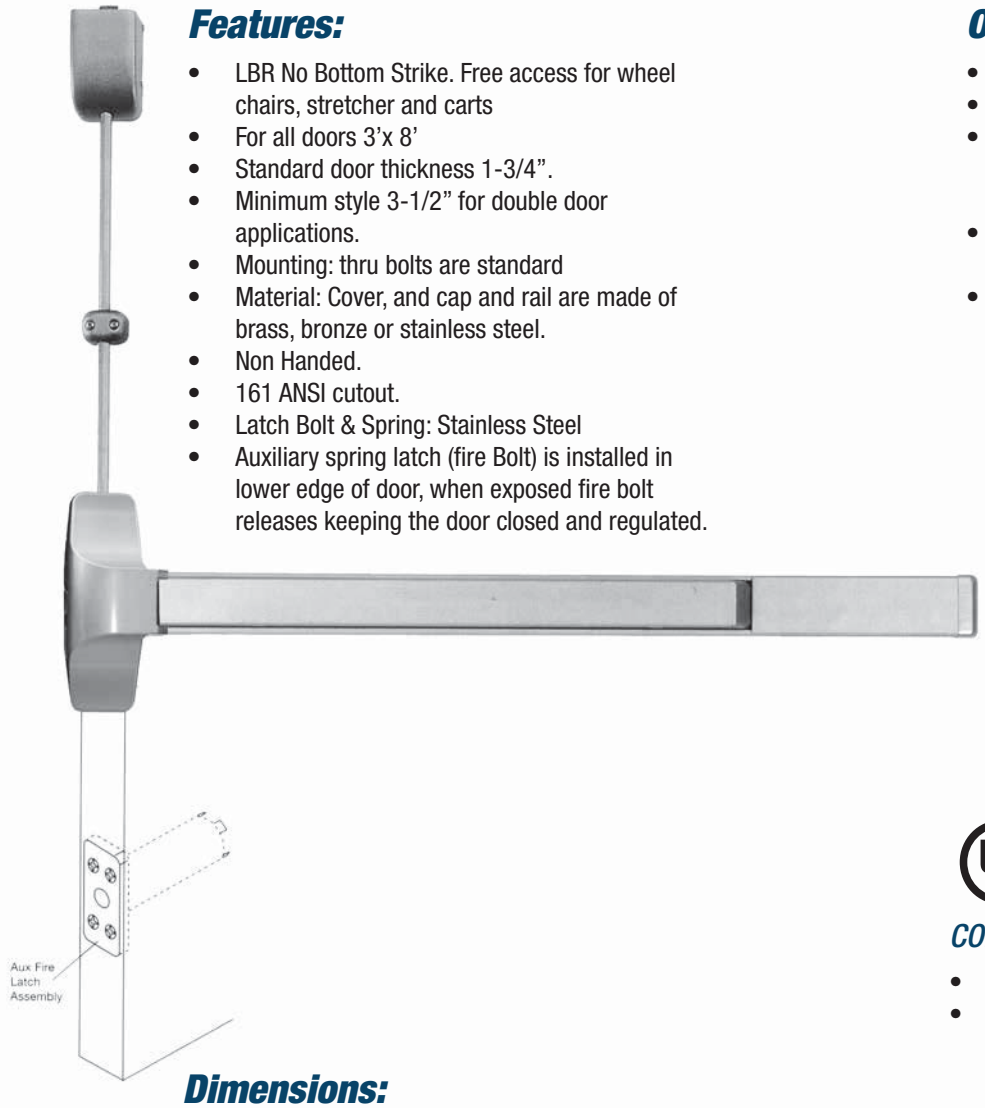

Features:

- LBR No Bottom Strike. Free access for wheel chairs, stretcher and carts
- For all doors 3'x 8'
- Standard door thickness 1-3/4".
- Minimum style 3-1/2" for double door applications.
- Mounting: thru bolts are standard
- Material: Cover, and cap and rail are made of brass, bronze or stainless steel.
- Non Handed.
- 161 ANSI cutout.
- Latch Bolt & Spring: Stainless Steel
- Auxiliary spring latch (fire Bolt) is installed in lower edge of door, when exposed fire bolt releases keeping the door closed and regulated.

Options:

- Stocked 48" x 96" length, specify "L"
- Fire bolt separate part number FB385
- Available different functions. Lever escutcheon trims are Grade 1 construction with clutch free wheeling mechanism. Covers 161 cutout.
- ALRMKIT700 Alarm Kit available for 3' & 4' applications.
- Glass Bead Kits available.

Dimensions:

Touchbar height to finished floor		41" at center
Touchbar	Projection	
	Neutral	2-1/2"
	Depressed	1-3/4"
Center case		8-1/2" x 2-1/2" x 2"
Device length	Short 3'	2'2" to 3'
	Long 4'	2'9" to 4'
Panic grade top latch case		3-15/16" x 2-1/8" x 1-3/8"
Fire grade top latch case		3-15/16" x 2-11/16" x 2-1/16"
Top rod length for 36" x 84" doors		Top rod 43-1/4"
Top rod length for 48" x 96" doors		Top rod 53-1/16"
Vertical rod		1/2" Round tubing

CODE COMPLIANCE:

- ANSI A165.3, Grade 1
- UL & ULC listed. LBR series for fire exit hardware for all types of 8'x 8' double doors icluding double egress for up to 3 hour metal, H/2 hour wood doors fire labeled installtions. Conforms to standard UL 1DC, UBC 7-2-1997 codes.

LIMITED LIFETIME WARRANTY

Stocked Product

Item	Finish
EDFV701 x LBR 36" x 96", 48" x 96"	10B, 28, 32D

Escutcheon Lever Design

Features:

- Grade 1, thrubolted design, clutch freewheeling. Non handed design. Easily field reversible.
- Hardened steel heavy duty tailpiece. Available for fire and non fire rated rim and vertical rod exit devices.
- Keyed functions stock “C” keyway, 1-1/8” mortise cylinder
- Door thickness 1-3/4”
- Escutcheon dimensions: 2-5/16” width x 8 1/2” length, lever 3/4”. Fits & covers 2-1/8” 161 cutout.

Functions:

Entry (L)	ETL Key locks and unlocks lever	ANSI 13
Passage (BE)	ETLBE Trim always free operable	ANSI 15
Dummy (DT)	ETLDT Dummy trim, One sided	ANSI 10
Store Room (NL)	ETLNL Key retracts latch bolt otherwise locked	ANSI 04

Stocked Product

Item	Finish
ETL	10B, 26D
ETLBE	10B, 26D
ETLDT	10B, 26D
ETLNL	10B, 26D

Lever: Rhodes type

For Concealed Applications

Item	Finish
ETL06CV	10B, 26D
ETLBE06CV	10B, 26D
ETLDT06CV	10B, 26D
ETLNL06CV	10B, 26D

Options:

Available with SFIC less core cylinder contact sales department

Pull & Thumbpiece Design

Dummy

- ETDT Outside by pull only, pull when dogged.
- ANSI Function 02.
- covers 161 cutout.

Store Room

- ETNL Outside by pull key retracts latchbolt.
- ANSI Function 03.
- covers 161 cutout.

Entrance

- ETTP Key locks and unlocks thumb piece.
- ANSI Function 13.
- covers 161 cutout.

Stocked Product

Item	Finish
ETDT	10B, 32D
ETNL	10B, 32D
ETTP	10B, 32D

“C” keyway

Cylinder type: ETTP mortise, ETNL rim

Doormerica

Glass Bead Shim Kits

- GBKR for rim devices, 1/8" thick
- GBKV for vertical rod devices, 1/8" thick
- GBKVF for fire rated devices, 1/8" thick

Note: When exit devices use both trim and shim kits then spindle length on thumb pieces and thru bolts must be increased accordingly

Stocked Product

Item	Finish
GBKR	ZN
GBKV	ZN
GBKVF	ZN

254ZN Overlapping Strike

- Surface applied. Used on inactive leaf for device on active leaf of pair of doors without mullion.

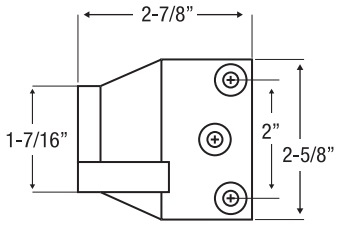

Stocked Product

Zinc Dichromate Finish ZN

FB385 Firebolt

Stocked Product

Item	Finish
FB385	32D

Exit Alarm Kit

Specify ALARM KIT

- Used with 700 series exit devices
- Length 3' door
  Specify "L" for 4' door
- Type: Rim or vertical rod
- Key "C" keyway furnished

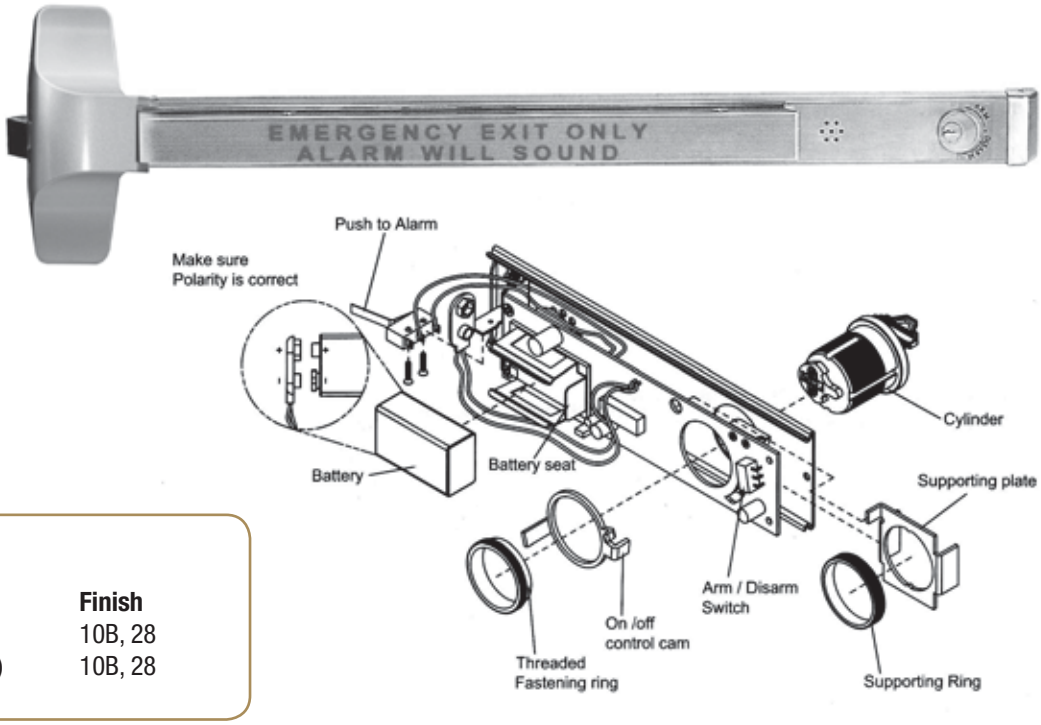

Stocked Product

Item	Finish
ALMRKIT700 (FOR 36" DEVICE)	10B, 28
ALMRKIT700L (FOR 48" DEVICE)	10B, 28

ED501 / EDF501 - Standard Duty Commercial Rim Exit Device

Features:

- Deadlatching and Non-Handed.
- Dogging Standard Only on NON-UL listed Device.
- Baked Enamel Aluminum (AL) and Duronodic (DU) Finish.
- For all doors up to 36".
- PEDPS01 & PEDSS01 -Standard Strike and Shim.
- PEDFP161 & PEDFP-ANSI -Latch & Strike Filler Plate.
- PEDSNB -Standard with Sex Bolts.
- EDF501 -UL Listed for Fire and Egress -Listed for 1-1/2 Hour for Doors Under 38" (3'-2") x 86" (7'-2").

Options:

- EDS551 -Exit Device made from Stainless Steel.
- ALRMKIT500 -Alarm Kit. Mortise Cylinder NOT Included
- ETLHL500 -Entry Function -Lever -161 Cylindrical Prep.
- ETLHL580 -Storeroom Function -Lever -161 Cylindrical Prep.
- ETPP05 -Pull Plate with Cylinder cut-out, Rim Cylinder NOT Included.
- ETPP06 -Pull Plate Only.

CODE COMPLIANCE:

- ANSI A 156.3 Grade 2. UL 1 OC and UBC 7.2 for positive pressure.
- ANSIA117.1 and ADA for barrier-free accessibility
- C-UBC -California Amended Uniform Builders Code -2001
- NFPA-80 -National Fire Protection Association 1999
- NFPA-101 National Fire Protection AssociationLife Safety -2000

1 YEAR LIMITED WARRANTY

Stocked Product

Item	Finish
ED501	Aluminum, Duro
EDF501	Aluminum, Duro
EDS551	Stainless Steel

DOORS & SPECIALTIES CO.
COMMERCIAL DOORS • FRAMES • HARDWARE

Doormerica

EDVR531 / EDFVR531 - Standard Duty Commercial Surface Vertical Rod Exit Device

Features:

- Deadlatching and Non-Handed. Dogging Standard Only on NON-UL listed Device.
- Interlocking Top and Pullman Bottom Latch.
- Baked Enamel Aluminum (AL) and Duronodic (DU) Finish.
- PEDPS03 & PEDPS11 -Standard Top & Bottom Strike.
- PEDFP161 & PEDFP-ANSI -Latch & Strike Filler Plate.
- PEDSNB -Standard with Sex Bolts.
- For all doors up to 36" (3') x 84" (7').
- EDFVR531 -UL Listed for Fire and Egress -Listed for 1-1/2 Hour Fire doors under 38" (3'2") x 86" (7'2")

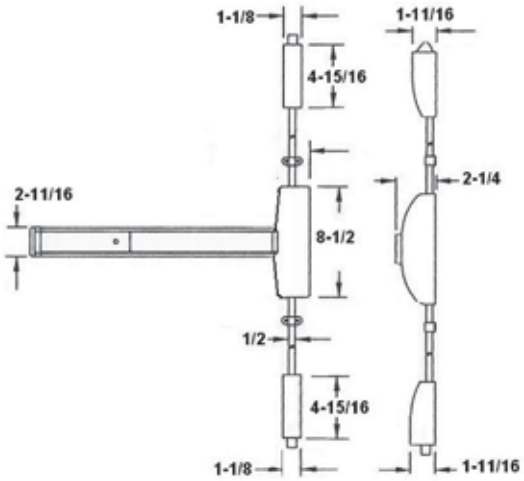

Options:

- ALRMKIT500 -Alarm Kit. Cylinder NOT Included, See Cylinder Section.
- ETLHL500 -Entry Function Lever #161 cylindrical preparation.
- ETLHL580 -Storeroom Function Lever #161 cylindrical Prep.
- ETPP05 Pull Plate with Cylinder cut-out, Rim Cylinder NOT Included.
- ETPP06 -Pull Plate Only.

CODE COMPLIANCE:

ANSI A 156.3 Grade 2. UL 1 OC and UBC 7.2 for positive pressure.
ANSIA117.1 and ADA for barrier-free accessibility
C-UBC -California Uniform Builders Code 2001
NFPA-80 -National Fire Protection Association 1999
NFPA101 National Fire Protection -Ufe Safety 2000

1 YEAR LIMITED WARRANTY

Stocked Product

Item	Finish
EDVR531	Alumnium and Duro
EDFVR531	Alumnium and Duro

Exit Device Trim

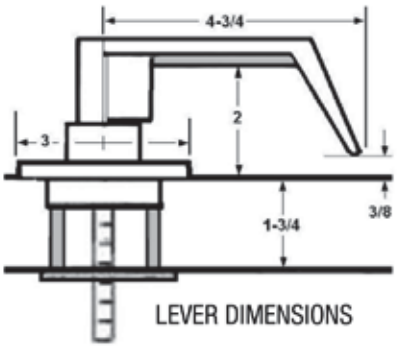

LEVER DIMENSIONS

ETLHL500 - ENTRY FUNCTION
ETLHL510 - PASSAGE LEVER TRIM
ETLHL580 - STOREROOM LEVER TRIM

Stocked Product

Item	Finish
ETLHL500	10B, 26D
ETLHL510	10B, 26D
ETLHL580	10B, 26D

Pull Trim

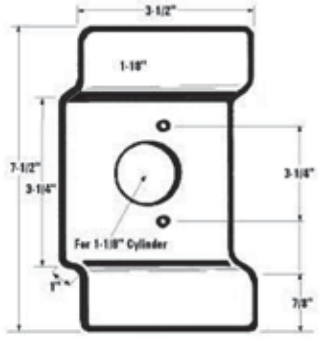

PULL DIMENSIONS

ETPP05
RIM CYLINDER
NOT INCLUDED

ETPP06

Accessories

PEDMP161
ANSI 161 2-1/8" BORE
TRIM MOUNTING PLATE

ALRMKIT500 - **ALARM KIT**
USED WITH 500 SERIES EXIT DEVICES
1-1/8 MORTISE CYLINDER
NOT INCLUDED

PED531EXT
OPTIONAL 12" VERTICAL
ROD EXTENSION
(500 SERIES ONLY)

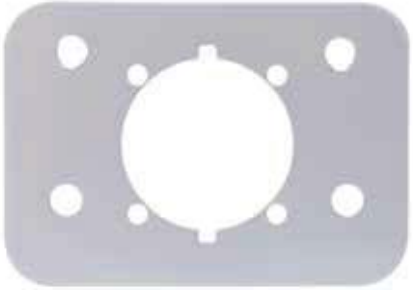

PEDBPVR
BACK PLATE FOR USE WITH
VERTICAL ROD TRIM

Stocked Product

Item	Finish
ALRMKIT500	Aluminum, Duro
ETPP05/ETPP06	Aluminum, Duro
PED531EXT	Aluminum, Duro
PEDBPVR	Aluminum
PEDMP161	Non-Finished

Doormerica

Mullion 7100 - For use with Non-Rated Rim Exit Devices on non-rated pairs of doors

Specifications:

Mullion Size..... 2" x 3" x 96" Steel Tube. Mullion may be field cut to fit proper size.
Rim Cylinder ..... Use 1-1/4" Rim Cylinder, cylinder not included.
Top Bracket ..... Steel, using key allows the mullion to be removed in seconds.
Mullion can be locked in top bracket easily without using the key.
Bottom Bracket..... Steel, fixed by 4 hex bolts with stainless steel anchors.
Strike..... Use two standard Rim Strikes, not included
Finish..... Gray baked powder coating only

Mullion 7100F - For use with Fire-Rated Rim Exit Devices on fire-rated pairs of doors

Specifications:

Mullion Size..... 2" x 3" x 96" Steel Tube. Mullion may be field cut to fit proper size.
Rim Cylinder..... Use 1-1/4" Rim Cylinder, cylinder not included.
Top Bracket ..... Stainless Steel, using key allows the mullion to be removed in seconds.
Mullion can be locked in top bracket easily without using the key.
Bottom Bracket..... Stainless Steel, fixed by 4 hex bolts with stainless steel anchors.
Strike..... Use two (2) sets of Mullion Strikes (688) & Strike Hooks (689)
Finish..... Gray baked powder coating only

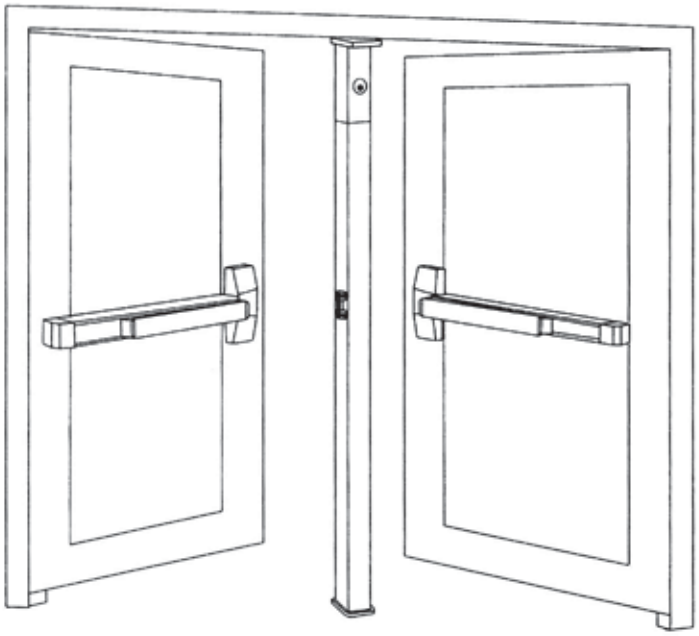

The removable Mullion is used for with two Rim Devices on double doors.

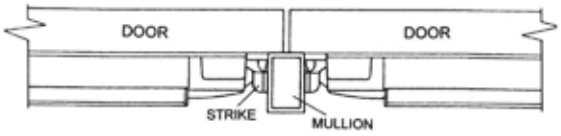

FOR USE WITH FIRE-RATED

Top Bracket

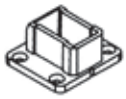
Bottom Bracket

Mullion Strike

Strike Hook

FOR USE WITH NON-RATED

Top Bracket

Bottom Bracket

Rim Strike

Stocked Product

Item	Description
MULL700	Mullion Non-Rated
MULL700F	Mullion Fire-Rated

DC40 / DC40BF - Heavy Duty Commercial Door Closer

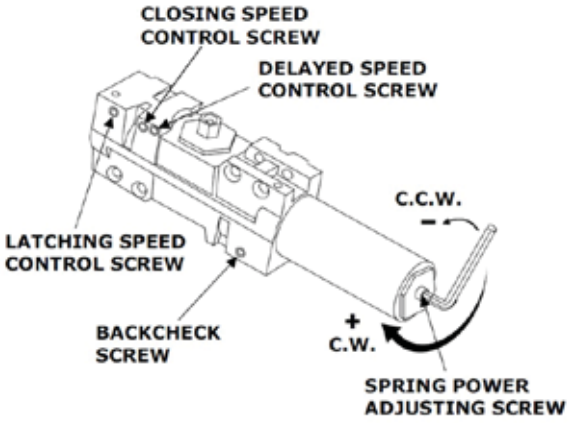

Features:

- Same hole pattern as LCN 4040/4041.
- Tri-Pack with regular, parallel ·and top-jamb mounting, instructions and full size template.
- Spring adjustment from size 1 to 6.
- DC40 also conforms to the minimum opening force requirements of the ADA and ANSI/BHMA Standard A117.1
- Non handed
- Standard with adjustable sweep, latch and back check.
- Full plastic cover
- SNB -Sex Nuts and Bolts
- Limited Lifetime Warranty
- 4 closers per shipping carton

Options:

- BF: Barrier free spring adjustment from size 1 to 4
- CUSH: Heavy Duty Cush Arm
- DA: Delayed Action
- EDA: Extra Duty Arm
- H: Hold Open Arm
- HCUSH: Hold Open Cush Arm
- HEDA: Hold Open Extra Duty Arm
- SCUSH: Spring Cush Arm
- SHCUSH: Spring Hold Open Cush Arm

CODE COMPLIANCE:

- ANSI A156.4 Grade 1. UL10C and UBC 7.2 for positive pressure.
- C-UBC -California Amended Uniform Builders Code -2001
- California State Fire Marshall (CSFM) approved
- ADA compliant

LIMITED LIFETIME WARRANTY

Stocked Product

Item	Finish
DC40 Regular Arm	Aluminum, Duro, US3, US26, Gold
DC40 Barrier Free	Aluminum, Duro
Cush Arm	Aluminum, Duro
Delayed Action	Aluminum, Duro
EDA Arm	Aluminum, Duro
H Cush Arm	Aluminum, Duro
H EDA Arm	Aluminum, Duro
Hold Open Arm	Aluminum, Duro
S Cush Arm	Aluminum, Duro
SH Cush Arm	Aluminum, Duro

DOORS & SPECIALTIES CO.
COMMERCIAL DOORS • FRAMES • HARDWARE

Doormerica

DC851 - Heavy Duty Commercial Door Closer

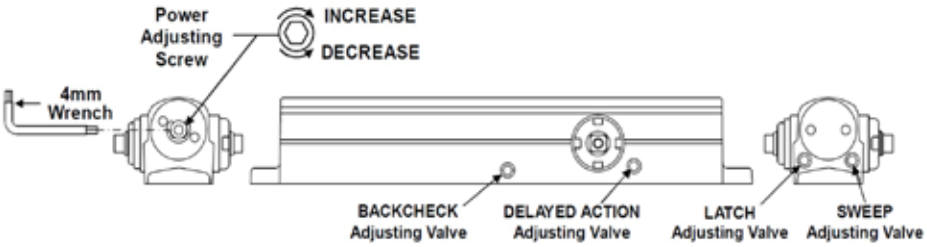

Features:

- Same hole pattern as Norton 8301/8501.
- Tri-Pack with regular, parallel, and top-jamb mounting, instructions and full size template
- Standard Spring adjustment Size BF-6
- Non handed
- Standard with adjustable sweep, latch, and back check
- Full plastic cover
- SNB: Sex nuts and bolt fasteners

Options:

- CUSH: Heady Duty Parallel Mount Cush arm
- DA: Delayed Action
- EDA: Extra Duty Arm
- H: Friction Hold-Open non handed arm
- HCUSH: Hold Open Cush Arm
- HEDA: Hold Open Extra Duty Arm
- SCUSH: Spring Cush Arm
- SHCUSH: Spring Hold Open Cush Arm
- PDC831: Slimline Cover Only - Special Order

CODE COMPLIANCE:

- ANSI A156.4 Grade 1 UL1DC and UBC 7.2 for positive pressure.
- ANSI A117.1 and ADA for barrier-free accessibility
- C-UBC -California Uniform Builders Code -2001
- California State Fire Marshall (CSFM) approved.

LIMITED LIFETIME WARRANTY

Stocked Product

Item	Finish
DC851 Regular Arm	Aluminum, Duro
Cush Arm	Aluminum, Duro
Delayed Action	Aluminum, Duro
EDA Arm	Aluminum, Duro
H Cush	Aluminum, Duro
H EDA	Aluminum, Duro
Hold Open Arm	Aluminum, Duro
S Cush	Aluminum, Duro
SH Cush	Aluminum, Duro

DC70 / DC70BF - Standard Duty Commercial Door Closer

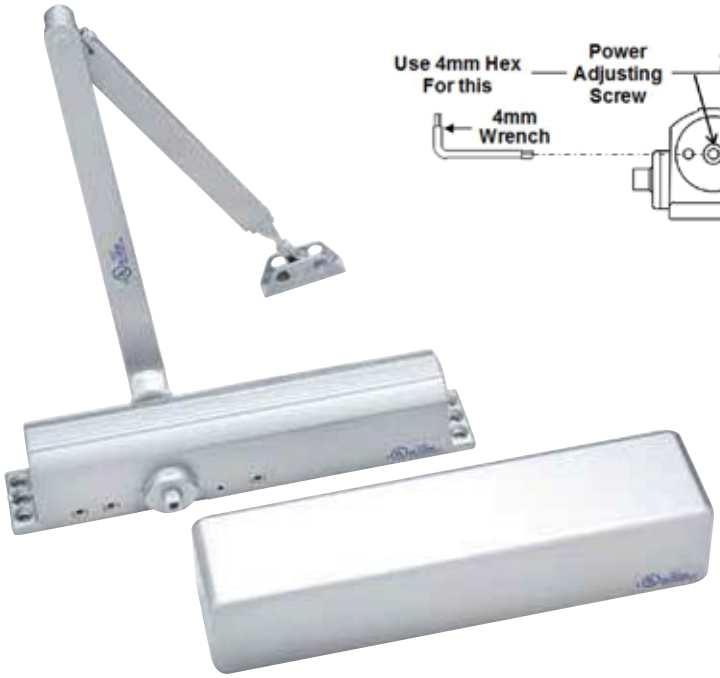

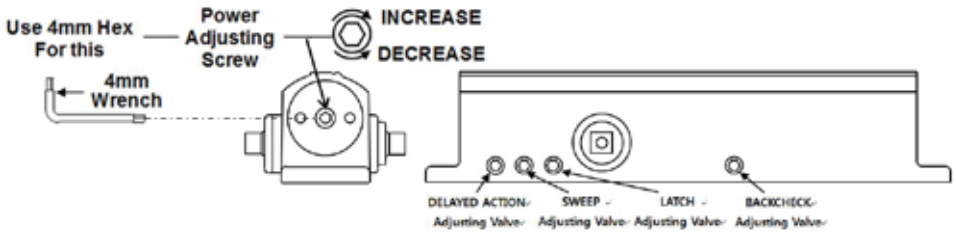

Features:

- Tri-Pack with regular, parallel and top-jamb mounting, instructions and full size template.
- Standard spring adjustment from size 1 to 6
- Non handed
- Standard with adjustable sweep, latch and back check.
- Full plastic cover
- SNB -Sex Nuts and Bolts
- Standard hole pattern and mounting location.
- Limited Lifetime Warranty
- 6 closers per shipping carton

Options:

- BF: Barrier free spring adjustment from size 1 to 4
- CUSH: Heavy Duty Parallel Mount Cush Arm.
- DA: Delay Closing Action.
- H: Friction Hold Open Non-Handed Arm.
- HCUSH: Hold Open Parallel Mount Cush Arm.

CODE COMPLIANCE:

- ANSI A 156.4 Grade 1. UL 1 OC and UBC 7.2 for positive pressure.
- ANSIA 117.1 and ADA for barrier-free accessibility C-UBC -California Amended Uniform Builders Code -2001
- California State Fire Marshall (CSFM) approved

LIMITED LIFETIME WARRANTY

Stocked Product

Item	Finish
DC70 Regular Arm:	Aluminum, Duro, Gold, US3, US26
BF Spring option:	Aluminum, Duro, Gold
Cush Arm:	Aluminum, Duro
Delayed Action:	Aluminum, Duro
H Cush:	Aluminum, Duro
Hold Open	Aluminum, Duro, Gold

Doormerica

DC161 / DC161BF - Standard Duty Commercial Door Closer

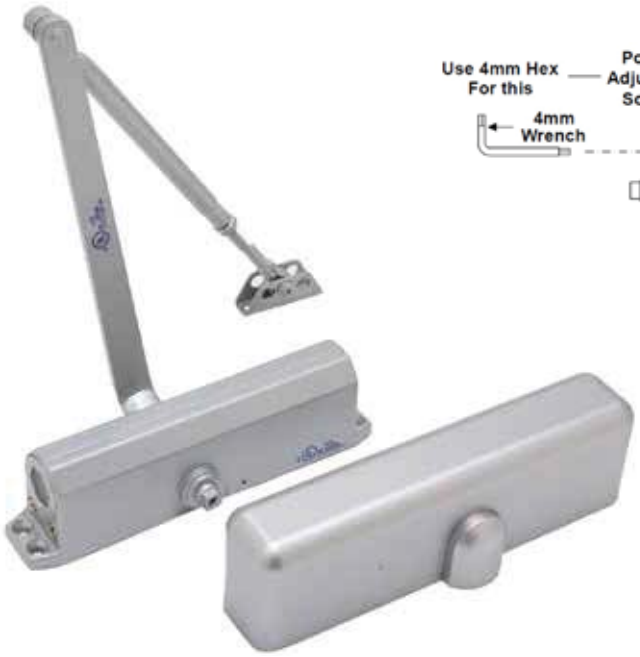

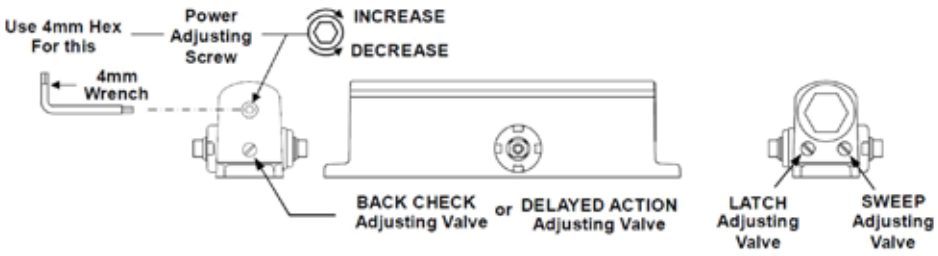

Specifications:

Full rack and pinion type with cast aluminum alloy body. All closers shall be provided with non-critical valves adjustment to independently regulate the sweep, latch and back-check. Closer shall have full spring adjustment from size 1 to size 4 for barrier free (BF) size and size 2 to size 6 for standard size. The closer shall be pre-adjusted at the factory to size 2 for the DC161BF and size 3 for DC161. Closer shall be non-handed with slim line cover with a projection of 3" from the surface of the door. All closers shall be mounted to allow the maximum degree of swing.

Features:

- Same hole pattern as Norton 1600.
- Tri-Pack with regular, parallel and top-jamb mounting, instructions and full size template.
- Standard spring adjustment from size 2 to 6
- Non handed
- Standard with adjustable sweep, latch and back check.
- Slimline Plastic Cover
- SNB -Sex Nuts and Bolts

Options:

- BF: Barrier free spring adjustment from size 1 - 4
- H: Hold Open Arm

CODE COMPLIANCE:

- ANSI A156.4 Grade 1 UL10C and UBC 7.2 for positive pressure.
- ANSI A117.1 and ADA for barrier-free accessibility
- C-UBC -California Uniform Builders Code -2001
- California State Fire Marshall (CSFM) approved

10 YEAR LIMITED WARRANTY

Stocked Product

Item	Finish
DC161	Aluminum, Duro
DC161BF	Aluminum, Duro
DC161H	Aluminum, Duro

DC50 - Standard Duty Commercial Door Closer

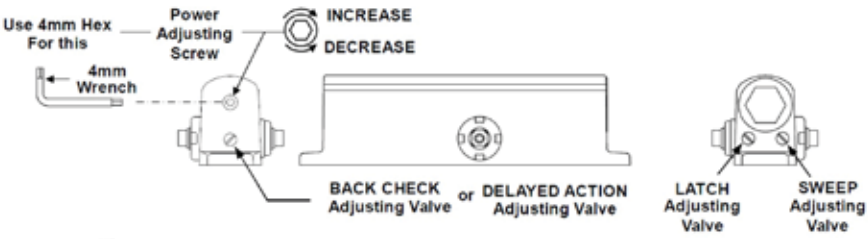

Features:

- 54 series fits Norton 1600 series hole pattern and mounting location
- Tri-Pack with regular, parallel and top-jamb mounting. instructions and full size template.
- Standard Closer Spring Sized to 3, 4 with NO adjustment.
- Non handed
- Standard with adjustable sweep, latch.
- Slim line Plastic Cover
- SNB -Sex Nuts
- 10 year warranty
- 10 closers per shipping carton

Options:

- BC: Backcheck adjustment valve

CODE COMPLIANCE:

- ANSI A156.4 Grade 2. UL10C and UBC 7.2 for positive pressure.
- C-UBC -California Amended Uniform Builders Code -2001
- California State Fire Marshall (CSFM) approved
- NOTE: May need to consider other closer if barrier free required. Please discuss with sales associate.

10 YEAR LIMITED WARRANTY

Stocked Product

Item	Finish
DC53	Aluminum, Duro
DC54	Aluminum, Duro
DC54BC	Aluminum, Duro

Doormerica

2100 Series - Electro Magnetic Door Holder

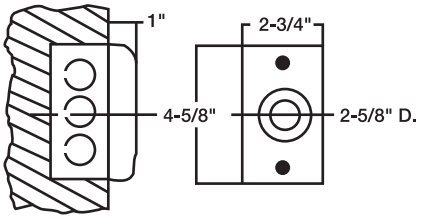

Specifications:

The 2100 Series Electro-magnetic Door Holder is stocked Tri Voltage. It can be wired to 12V DC, 24VAC/DC or 120VAC. Units can be used on fire/smoke barrier doors hold open until released by a remote switching device. They can also be used to just hold a door open. The armature is thru-bolted to the door for security. Extensions available for different projection requirements.

Features:

- Multiple voltages standard 24VAC, 24VDC,120VAC
- Recessed wall mounted fits inside standard single gang electrical box.
- Includes 1/2” extension with product.
- 1/2” and 3/4”extensions available.

CODE COMPLIANCE:

Under Writers US and Canada Listed
California State Fire Marshal Listed
Meets ANSI 156.15

Stocked Product:

Item	Finish
MH2100	Aluminum, Duro
PMH20050	1/2” AL extension
PMH20075	3/4” AL extension

COR 60 / COR 72 / COR 84 - Coordinator and Accessories

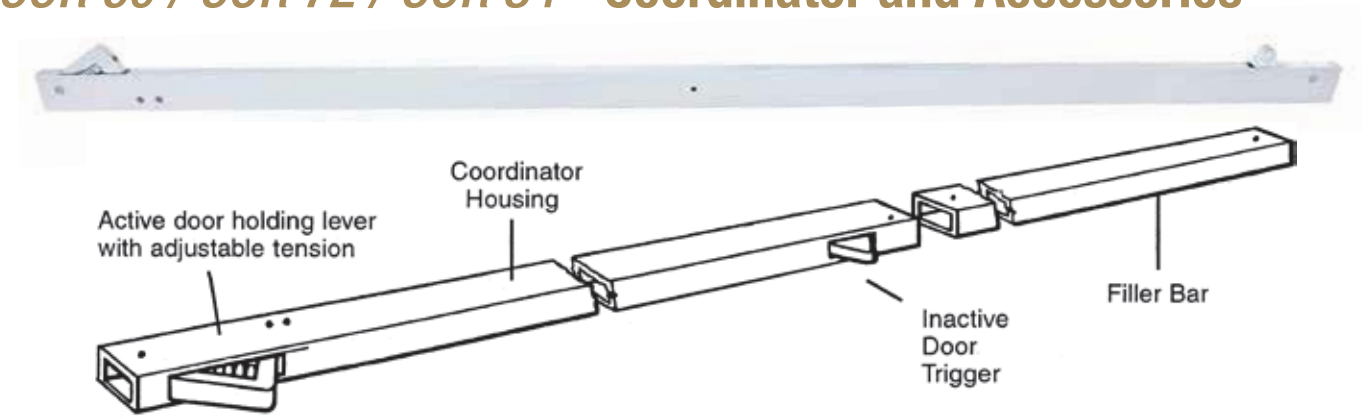

Features:

- Extruded Aluminum Housing.
- Adjustable Tension Override Spring.
- Filler Bar provided allowing an even, unbroken line the full width of the opening.
- Mounting Screws #12 x 24 x 1-1/4" MS.
- For use on Fire Rated Openings.

Options:

	Opening Width	Coordinator Size	Filler Size
COR 60	5'	42"	18"
COR 72	6'	52"	20"
COR 84	7'	52"	32"

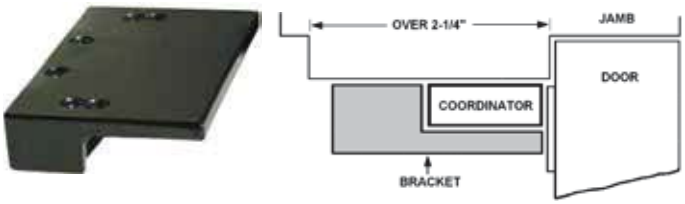

PCORMB414 Mounting Bracket (1 step)
Jamb Depth 4-1/4" Min.
5/8" Stop Height - For Stop over 2-1/4"

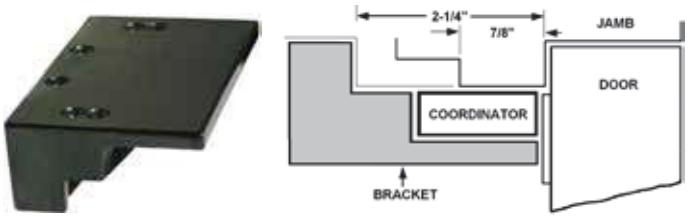

PCORMB434 Mounting Bracket (2 step)
Jamb Depth 4-3/4" Min.
5/8" Stop Height - For Stop Width 7/8" to 2-1/4"

Specifications:

Coordinator – Coordinator shall be by Doormerica model number COR flat bar type and made from extruded Aluminum. Coordinator shall control the closing sequence so the active door is held open until the inactive door closes, triggering the release of the active door allowing for proper latching. Filler bar shall be provided allowing an even, unbroken line the full width of the opening. Optional PCORMB434 or PCORMB414 shall be ordered for each piece of hardware to be mounted over the bar coordinator.

CODE COMPLIANCE:

- ANSI 156.3 Type 21A.
- Conforms to UL10C and UBC 7-2.
- ANSI A117.1 and ADA for barrier-free accessibility.
- C-UBC - California Uniform Builders Code.
- NFPA 80 - National Fire Protection Association.
- NFPA 101 - National Fire Protection, Life Safety .

1 YEAR LIMITED WARRANTY

Stocked Product

Item	Finish
COR 60	Aluminum
COR 72	Aluminum
COR 84	Aluminum
PCORMB414	Black
PCORMB434	Black

Doormerica

FBA292 - Automatic Flush Bolts For Metal Doors

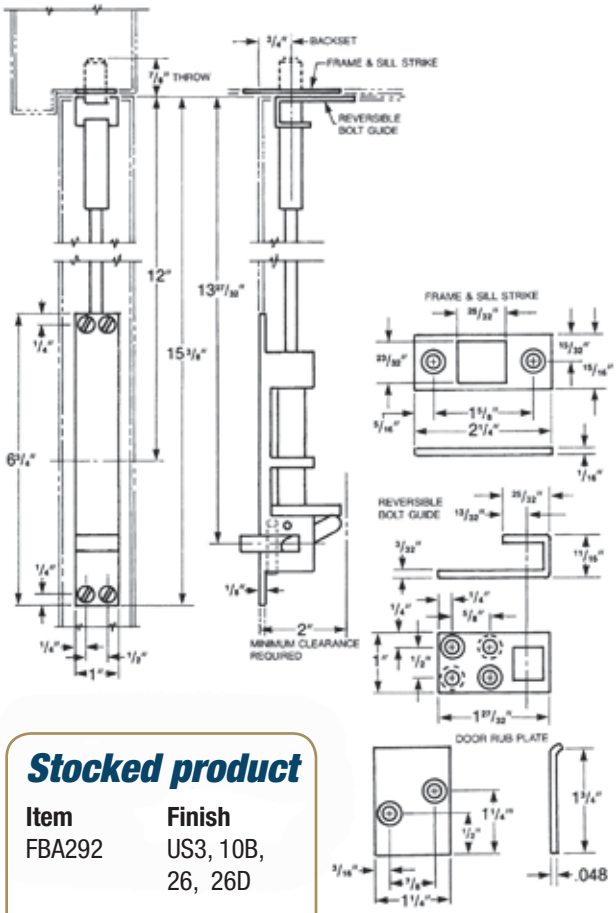

Stocked product

Item	Finish
FBA292	US3, 10B, 26, 26D

Features:

- Fully Automatic, Non-Handed.
- Automatic 3/4" Throw with 1" Vertical Adjustment.
- 12" Rod to Fit Standard ANSI Preparation.
- Spring Override in Case of Misalignment.
- Steel Body and Stainless Steel Components.
- Bolt Housing Screws #8 x 32 x 3/4" MS
#8 x 1" SM
- Strike Screws #8 x 32 x 3/4" MS
#8 x 1"SM
- Bolt Guide Screws #8 x 32 x 3/4" MS
#8 x 1" SM
- Listed up to 3 hours on Hollow Metal and Steel-Covered Composite Doors up to 8 feet.
- Sold as set.

1 YEAR LIMITED WARRANTY

FBA291 - Automatic Flush Bolts For Wood Doors

Stocked product

Item	Finish
FBA291	US3, 10B, 26, 26D

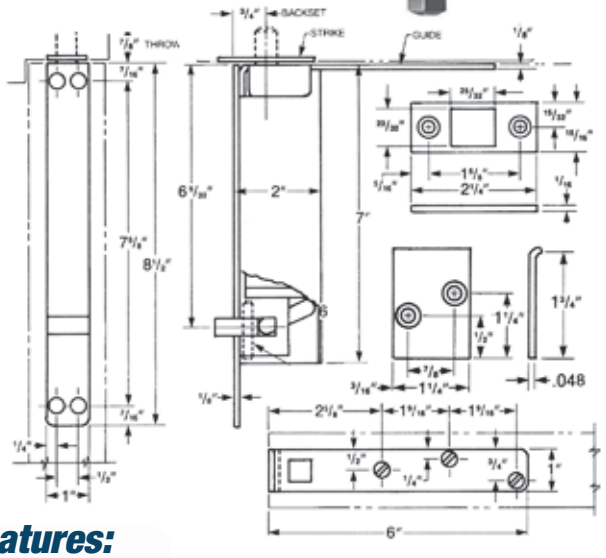

Features:

- Fully Automatic, Non-Handed.
- Automatic 3/4" Throw and 3/4" Vertical Adjustment.
- Spring Override in Case of Misalignment.
- Steel Body and Stainless Steel Components.
- Bolt Housing Screws #8 x 3/4" SM
#8 x 32 x 1/4" MS
- Strike Screws # 8 x 3/4" SM
- Bolt Guide Screws #10 x 7/8" SM
- Rub Plate Screws #8 x 3/4" SM
- Listed up to 1-1/2 hours on Composite Wood Doors up to 8 Feet.
- Sold as set.

CODE COMPLIANCE:

Manual Flush Bolts

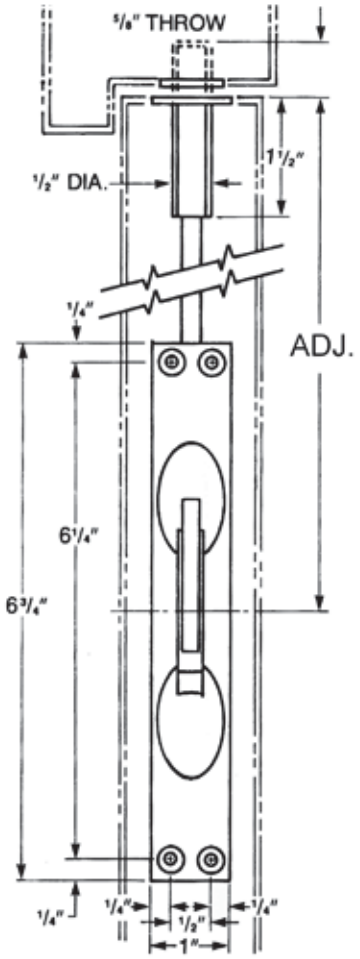

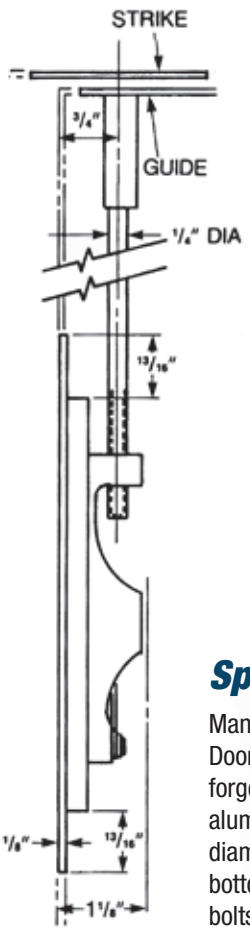

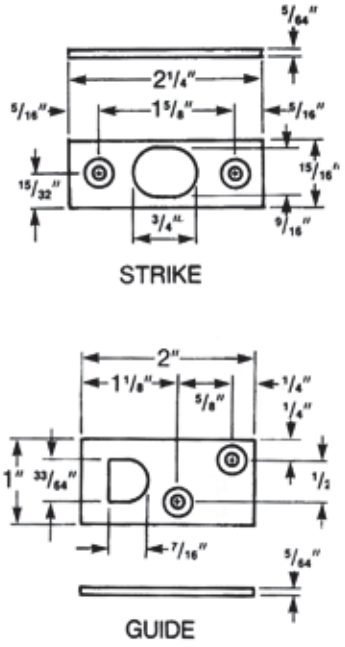

Specifications:

Manual Flush Bolt -Manual flush bolts shall be by Doormerica model number FB197 series made from forged brass or FB197AL series made from extruded aluminum. Flush bolts shall be provided with 1/2" diameter brass bolts and project 5/8" from the top or bottom edge of door with 7/8" vertical adjustment. Flush bolts shall have spring loaded lever to project or retract the bolts.

Features:

- FB197 -Forged Brass.
- FB197AL -Extruded Aluminum.
- Non-Handed.
- 5/8" Throw with 7/8" Vertical Adjustment.
- 12" Rod to Fit Standard ANSI Preparation.
- Spring Loaded Lever to Project or Retract Bolt.
- Forged Brass Construction.
- Bolt Housing Screws #8 x 32 x 1/2" MS
  #8 x 1"SM
- Strike Screws #8 x 32 x 1/2" MS
  #8 x 1"SM
- Bolt Guide Screws #8 x 32 x 1/2" MS
  #8 x 1" SM
- Listed up to 3 hours on Hollow Metal and Steel-Covered Composite Doors up to 8 feet.

CODE COMPLIANCE:

- FED. SPEC. -1049
- ANSI-A156.16.
- BHMA -LI4081
- NFPA 80 -National Fire Protection Association

1 YEAR LIMITED WARRANTY

Stocked Product

Item	Finish
FB197	US3, 10B, 26
FB197AL	ALUMINUM

Doormerica

DPS280 - Dust Proof Strike

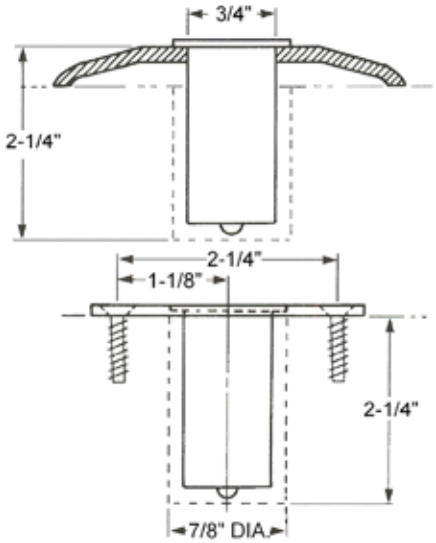

Features:

- Spring Loaded 3/4" Plunger.
- Both Floor and Threshold Installation.
- Face Plate 3" x 1-1/2".
- Body Diameter 15/16".
- Over all Depth 2-1/4"
- Strike Screws #12 x 1-1/2"
- Plastic Anchors
- Listed for use up to 3 Hours.

Specifications:

Dust Proof Strike – Dust Proof Strike shall be by Doormerica model number DPS280 series and made from extruded brass. All dust proof strikes shall be provided with 3/4" diameter spring loaded plunger that returns to the floor level when the flush bolt is retracted.

CODE COMPLIANCE:

- ANSI - A156.16.
- BHMA – L14011 - L14012
- Conforms to UL10C and UBC 7-2.
- ANSI A117.1 and ADA for barrier-free accessibility.
- C-UBC - California Uniform Builders Code.
- NFPA-80- National Fire Protection Association.
- NFPA-101- National Fire Protection, Life Safety.

1 YEAR LIMITED WARRANTY

Stocked Product

Item	Finish
DPS280	US3, 10B, 26, 26D

DH179 / DHBB179 - 4 x 4, 4-1/2 x 4, 4-1/2 x 4-1/2, 5 x 4-1/2

Full Mortise, Standard Weight Hinge

Features:

- Full mortise, square corner, standard weight steel template hinge.
- Material Gauge 4" = .123
4-1/2" = .134
5" = .145
- Plain Bearing or Ball Bearing
- Screw packages -All Machine Screws (AMS) and
-All Wood Screws (AWS).
- Machine Screws -Phillips(#1) Flat-head
-12 x 24 x 1/2"
- Wood Screws -Phillips(#1) Flat-head
-12 x 1-1/4"
- Also available NRP (Non Removable Pin)

Options:

- NRP -Non Removable Pin with set screw.
- DHBB179SS -Stainless Steel Base Metal. (32D).
- DHBB179BR (brass based)

Stocked Product

Item	Finish
DH179 4" x 4" and 4-1/2" x 4-1/2"	US3,US4,10B,15,15A, 26,26D
DH179 4-1/2" x 4"	US3,US4,26
DHBB179 4" x 4"	US3,US4,10B,15,26,26D
DHBB179 4-1/2" x 4"	US3,US4,10B,26
DHBB179 4-1/2" x 4-1/2"	USP,US3,US4,10B,15,26, 26D,32D
DHBB179 5" x 4-1/2"	US3,10B,26,26D
DHBB179 5" x 5"	26D
DHBB179BR 4-1/2' x 4-1/2"	10B,26D
DHBB179BR 5" x 4-1/2"	10B,26D
DHBB179SS 5" x 4-1/2"	32D

PACKAGING INFORMATION:

- Size 4" & 4-1/2" -3 Hinges per BOX and 48 per Carton.
Size 5" -3 Hinges per BOX and 24 per Carton.

Note: NRP (Non Removable Pin) available on most sizes. Contact sales department for availability

DHRC179 / DHRCBB179 - 3-1/2 x 3-1/2, 4 x 4

1/4" Radius Corner Standard Weight
Plain & Ball Bearing Hinge

Features:

- Full mortise, 1/4" Radius Corner, Standard Weight Steel Template Hinge.
- Material Gauge -3-1/2" =.119, 4" =.129
- Plain Bearing
- Ball Bearing Available Only in 4 x 4.
- Screw packages -All Machine Screws (AMS) and All Wood Screws (AWS).
- 3-1/2" AMS (10 x 24 x 1/2) and AWS (9 x 1 ")
- 4" - AMS (12 x 24 x 1/2) and AWS (12 x 1-1/4")
- NRP - Non Removable Pin stocked 4 x 4 size only RC179 and RCBB179

Stocked Product

Item	Finish
DHRC179 3-1/2" x 3-1/2" and 4" x 4"	US3, US4,10B,15, 26, 26D
DHRCBB179 4" x 4"	US3, US4,10B,15, 26, 26D

Doormerica

DHBB168 - 4-1/2 x 4-1/2, 5 x 4-1/2

Full Mortise, Heavy Weight Hinge

Features:

- Full Mortise, Square Corner, Heavy Weight Steel Template Hinge.
- Material Gauge 4-1/2" = .180
  5" = .190
- Four Ball Bearings
- Stock Sizes 4-1/2" x 4-1/2" and 5" x 4-1/2"
- Screw packages -All Machine Screws (AMS) and Half Wood Screws (1/2 WS).
- Machine Screws -Phillips(#I) Flat-head -12 x 24 x 1/2"
- Wood Screws -Phillips(#I) Flat-head -12 x 1-1/4"
- Available NRP non removable pin
- Also available in SS (stainless steel) and BR (brass based)

Stocked Product

Item	Finish
DHBB168 4-1/2" x 4-1/2"	US3,10B, 26, 26D
DHBB168 5" x 4-1/2"	US3,10B, 26D
DHBB168BR 4-1/2" x 4-1/2"	US3,10B, 26D
DHBB168BR 5" x 4-1/2"	US3,10B, 26D
DHBB168SS 4-1/2" x 4-1/2"	32D
DHBB168SS 5" x 4-1/2"	32D

DHSP179 - Commercial Weight Spring Hinge 4-1/2 x 4-1/2
DHRCSP179 - Commercial Weight Spring Hinge 4 x 4

Features:

- UL Listed
- Material Gauge -.134
- Adjustable Spring Tension
- Screw Packages -All Machine Screws (AMS) and All Wood Screws (AWS).
- Machine screws Phillips(#I) Flat-head -12 x 24 x 1/2"
- Wood Screws Phillips(#I) Flat-head -12 x 1-1/4"

Full Mortise, Square Corner, Spring Hinges, Steel Template Hinge.

Full Mortise, 1/4" Radius Corner, Spring Hinges, Steel Hinge.

Stocked Product

Item	Finish
DHRCSP179 4" x 4"	US3, US4,10B,15, 26, 26D
DHSP179 4-1/2" x 4-1/2"	US3, US4,10B, 15, 26, 26D

DHC700 / DHCB700
Standard Weight 3 Knuckle Plain & Concealed Bearing Hinge

Features:

- Full mortise, square corner, standard weight template hinge
- Material gauge - 4-1/2" = .134
  5" = .145
- Plain bearing or concealed bearing
- Screw packages -all machine screws (AMS) and all wood screws (AWS)
- Machine screws -Phillips (#1) flat-head -12 x 24 x 1/2"
- Wood screws -Phillips (#1) flat-head -12 x 1-1/4"

CODE COMPLIANCE:

- ANSI type A8133-3 (DHSC700) AND ABI12-3 (DHCB700)
- Meet USA federal spec. #FF-H-116C
- C-UBC -California Amended Uniform Builders Code-2001.
- NFPA-80-National Fire Protection Association -1999.
- NFPA-10l National Fire Protection AssociationLife Safety -2000

Stocked Product

Item	Finish
DHC700 4-1/2" x 4-1/2" Brass	10B, 26D
DHC700 4-1/2" x 4-1/2" SS	32D
DHCB700 4-1/2" x 4-1/2"	26D
DHCB700 4-1/2" x 4-1/2" Brass	10B, 26D
DHCB700 4-1/2" x 4-1/2" SS	32D
DHCB700 5" x 4-1/2"	26D
DHCB700 5" x 4-1/2" Brass	26D

DHCB800 - Heavy Weight 3 Knuckle Concealed Bearing Hinge

Features:

- Full mortise, square corner, heavy weight steel template hinge
- Material Gauge 4-1/2" = .180
  5" = .190
- Screw packages -all machine screws (AMS) and half wood screws (AWS)
- Machine screws -Phillips (#1) flat-head -12 x 24 x 1/2"
- Wood screws -Phillips (#1) flat-head -12 x 1-1/4"

CODE COMPLIANCE:

- ANSI type A8111-3 (DHCB800)
- Meet USA federal spec. #FF-H-116C
- C-UBC California Amended Uniform Builders Code-2001.
- NFPA-80-National Fire Protection Association -1999.
- NFPA-101 National Fire Protection AssociationLife Safety -2000

Stocked Product

Item	Finish
DHCB800 4-1/2" x 4-1/2" Brass	10B
DHCB800 4-1/2" x 4-1/2" SS	32D
DHCB800 5" x 4-1/2" SS	32D

Doormerica

DHRC114 / DHRC158 - 3-1/2 x 3-1/2, 4 x 4

1/4” and 5/8” Radius Corner Residential Hinge

Features:

- Full Mortise, 1/4” or 5 /8” Radius Corner NonTemplate Steel hinge.
- Material Gauge -.085
- Plain Bearing
- Screw packages -All Wood Screws (AWS)
- Wood Screws for 3-1/ 2” -Phillips(#1) Flat-head -9 x 3/4”
- Wood Screws for 4” -Phillips(#1) Flat-head -9 x 1”
- NRP (Non Removable Pin) Stocked in 4” x 4” only

PACKAGING INFORMATION:

- Bulk only
- 100 hinges per shipping carton

Stocked Product

Item	Finish
DHRC114 3.5” x 3.5”	US3, US4,10B, 15, 26D
DHRC114 4” x 4”	US3, US4,10B, 15, 26, 26D
DHRC158 3.5” x 3.5”	US3, US4,10B, 15, 26, 26D
DHRC158 4” x 4”	US3, US4,10B, 15, 26D

NRP stocked in RC114 4” x 4” size only

DHRCSP114 / DHRCSP158 - 4 x 4

1/4” and 5/8” Radius Corner Residential Spring Hinge

Features:

- Full Mortise, 1 /4” or 5/8” Radius Corner, Spring Hinge.
- UL Listed
- Material Gauge -.097
- Adjustable Spring Tension
- Screw Packages -All Wood Screws (AWS)
- Wood Screws for 4” -Phillips(#1) Flat-head -9 x 1”

Stocked Product

Item	Finish
DHRCSP114	US4, 15, 26, 26D
DHRCSP158	US4, 10B, 15, 26D

DHTM214 - 3-1/2 x 3-1/2, 4 x 4

1/4" Radius Corner, Light Weight Commercial Hinge

Features:

- Full Mortise, 1/4" Radius Corner Hinge Designed for Prefinished Steel Frames.
- Material Gauge -.085
- Plain Bearing.
- Screw packages -All Machine Screws (AMS) and
- Half Wood Screws (1/2 WS).
- 3-1/2" -AMS (10 x 24 x 1/2) and 1/2 WS (9 x 1")
- 4" -AMS (12 x 24 x 1/2) and 1/2 WS (12 x 1-1/4")

*NRP- Non Removable Pin stocked in 4" x 4" only

PACKAGING INFORMATION:

- Size 3-1/2 x 3-1/2 -2 hinges per box and 100 per carton
- Size 4 x 4 -3 hinges per box and 48 per carton

Stocked Product

Item	Finish
DHTM214 3-1/2" x 3-1/2"	10B, 26D
DHTM214 4" x 4"	10B, 26D
NRP stocked in 4" x 4" size only	

DHTS214 - 4 x 4

1/4" Radius Corner Light Weight Commercial Spring Hinge

Features:

- Full Mortise, 1/4" Radius Corner Hinge Designed for Prefinished Steel Frames
- UL Listed
- Material Gauge -.097
- Adjustable Spring Tension.
- Screw packages -All Machine Screws (AMS) and -Half Wood Screws (1/2WS).
- 4" -AMS (12 x 24 x 1/2") and 1/2 WS 12 x 1-1/4"

PACKAGING INFORMATION:

- 2 hinges per box and 80 per carton

Stocked Product

Item	Finish
DHTS214 4" x 4"	10B,26D

Doormerica

Pushes and Pulls

PPN4016R PPN4016

Features:

- All Plate Goods are 16 Gauge (.050) Thick.
- Stainless Steel SS430, no Nickel.
- Plates individually wrapped with Mounting Screws.
- Pull Plates and Handles have Mounting Screws for 1-3/4" Thick Door.
- All Plates Packed with Stainless Steel Sheet Metal Screws Plated to Match Finish.

Options:

- PPN4016 - 4" x 16", Push Plate.
- PPN4016R - 4" x 16" Plate with Round Pulls.
  - R -Round Pull 6-3/4" Overall, 6" C to C and 2·1/8" Projection.
- 4016 push plate and 4016R pull plates stocked in SS430 Stainless (less nickel) Size 4"x 16" only. Specify PPN.

Specifications:

Plate Goods -Plate goods shall be by Doormerica model number PPN and made from stainless steel. All plates to be a minimum of 16 gauge (.050) and beveled on four sides. All Plates to be provided with stainless steel Phillips sheet metal screws plated to match finish. Each plate shall be individually wrapped with mounting screws.
Stocked Product

Stocked product

Item	Finish
PPN4016	32D
PPN4016R	32D

"No Nickel" SS430 Stainless Steel Only

Kick Plates

KPN1034 - 10" x 34" Kick Plate

Features:

- All Plate Goods are 16 Gauge (.050) Thick.
- Stainless Steel SS430, no Nickel.
- Plates individually wrapped with Mounting Screws.
- All Plates Packed with Stainless Steel Sheet Metal Screws Plated to Match Finish.
- Kickplates are not beveled.

Options:

- KPN0834 - 8" x 34" Kick Plate.
- KPN1034 -10" x 34" Kick Plate.
- KPN1234 -12" x 34" Kick Plate.

Specifications:

Plate Goods -Plate goods shall be by Doormerica model number KPN made from plate brass or stainless steel. All plates to be a minimum of 16 gauge (.050), All Plates to be provided with stainless steel Phillips sheet metal screws plated to match finish. Each plate shall be individually wrapped with mounting screws
Stocked Product
"No Nickel" SS430 Stainless Steel Only

Stocked product

Item	Finish
KPN0834	32D
KPN1034	32D
KPN1234	32D

"No Nickel" SS430 Stainless Steel Only

Door Guards

Features:

- DG128BR -solid forged brass.
- Positive projection lock ball not allowing forced entry.
- Swing bar folds out of place when not used.
- Maximum 4” door opening when engaged.
- Cannot be disengaged unless door is fully closed.

Options:

- DGDEP128 - Door Angle Protector
- DGS128 - Door Guard Shim

Stocked Product

Item	Finish
DG128BR	US3,10B,15,26,26D
DGDEP128	10B,15,26,26D
DGS128	Black

Viewers

DV190

Door Viewer
9/16” Bore Diameter

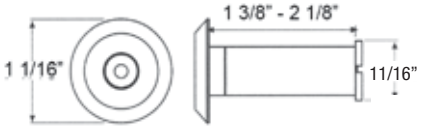

DV3315

UL Listed Door Viewer
9/16” Bore Diameter

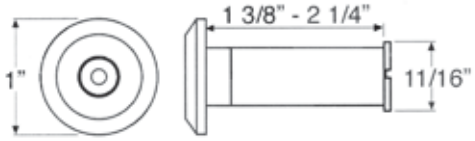

Features:

- DV190 -190 Degrees Viewing Area.
  -Polished Plastic Lenses.
- DV3315 -200 Degrees Viewing Area.
  -Polished Plastic Lenses.
- All Viewers Solid Cast Brass.

Stocked Product

Item	Finish
DV190	US3,10B,15,26,26D
DV3315	US3,10B,15,15A,26,26D

Doormerica

Door Holders

SH1135

Drop Down Door Holder

Stocked Product

Item	Finish
SH1135	Duro

SH1235BR

Drop Down Door Holder

Stocked Product

Item	Finish
SH1235BR	US3, 10B, 26D

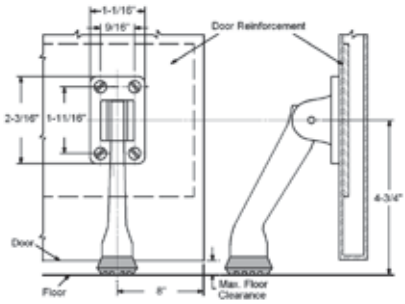

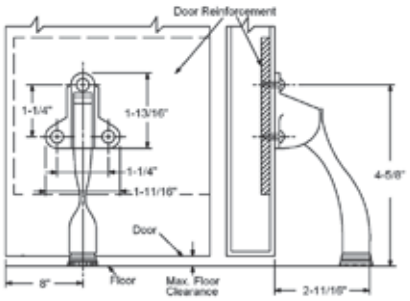

Features:

- SH1135 - 5" Cast Alloy Holder.
- SH1235BR - 5" Cast Brass Holder.
- Stops individually wrapped with mounting screws.
- Polybagged with 3 or 4 sheet metal screws.

Wall Stops

SH401

Concave Wall Stop

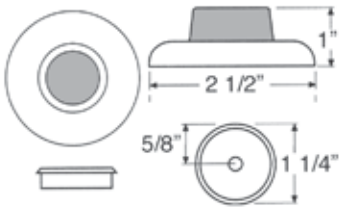

SH406

Convex Wall Stop

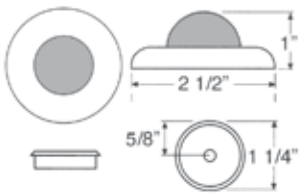

Features:

- SH401 - Concave Wall Stop.
- SH406 - Convex Wall Stop.
- All Wall Stops Are Wrought Steel.
- Stops Individually Wrapped With Mounting Screws.
- Polybagged With: 1 Plastic Anchor
  1 Sheet Metal Screw

Stocked Product

Item	Finish
SH401	US3, 10B, 15, 26, 26D
SH406	10B, 15, 26D

Floor Stops

SH436

Low Dome Stop

SH438

High Dome Stop

Features:

- SH436 -1/4" Rise x 1" Low Dome Stop.
- SH438 -1/2" Rise x 1-1/4" High Dome Stop.
- All Floor Stops are Cast Brass
- Stops Individually wrapped with Mounting Screws.
- Polybagged with: 1 Plastic Anchor
  1 Sheet Metal Screw
  1 Lead Anchor

Stocked Product

Item	Finish
SH436	US3, 10B, 15, 26, 26D
SH438	US3, 10B, 15, 26, 26D

Features:

- SH444 -3-1/8" High Floor Stop.
- Solid Cast Brass.
- Stops Individually wrapped with Mounting Screws.
- Polybagged with: 1 Plastic Anchor
  1 Sheet Metal Screw
  1 Lead Anchor

Specifications:

Stops -Stops shall be by Doormerica model number SH444 and made from solid cast brass. All stops to be provided with steel Phillips sheet metal screws plated to match finish. Each Stop shall be individually wrapped with mounting screws.

SH444

Floor Mount Stop

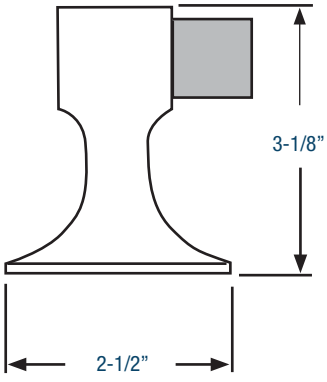

Stocked Product

Item	Finish
SH444	US3, 10B, 26, 26D

Doormerica

RL300 / RL320 - Roller Latches

Features:

- Actuation is simple, closing of the door causes the roller to fall in the depression of the strike, thereby holding the door closed.
- The projection of the roller is easily adjusted using adjusting screws on the face of the unit..
- Maximum projection of the roller is 3/8" allowing for variance in the door clearance.
- Nylon Roller Standard.
- Forged Brass Construction.
- Meets ANSI/BHMA A156.16, E19091.
- Finishes US10B, US26D other finishes available special order only

RL300

Dimensions:

Body: 1" Wide x 3-3/8" Long x 1-5/8" Deep
Strike: 1-11/16" Wide x 2-3/16" Long x 5/32" Thick

Stocked Product

Item	Finish
RL300	10B, 26D

Features:

- Actuation is simple, closing of the door causes the roller to fall in the depression of the strike, thereby holding the door closed.
- The projection of the roller is easily adjusted by turning knurled knob on back of latch.
- Maximum projection of the roller is 1/2" allowing for variance in the door clearance.
- Fits heavy-duty cylindrical lock cutout.
- Nylon Roller Standard.
- Non-handed.
- Brass or Stainless Steel Construction.
- Meets ANSI/BHMA A156.16, E19101.
- Finishes US10B, US26D other finishes available special order only

RL320

Dimensions:

Body: 1-1/8" Wide x 2-1/4" Long x 1-3/4" Deep
Strike: 1-1/8" Wide x 2-3/4" Long x 1/16" Thick

Stocked Product

Item	Finish
RL320	26D

BC2950 / BC2955 - Ball Catches

BC2950 - Ball Catch

BC2955 - Roller Catch

Features:

- BC2950 - Ball Catch.
- BC2955 - Roller Catch.
- Dual Adjustment for Door Clearance and Holding Strength.
- Lip Strike Designed for Jamb Mounting.
- Ball Catch Individually wrapped with Mounting Screws.

Option:

- BC2955T - with 2-3/4" x 1-1/8" T Strike
  Packed with #8 x 32 metal screws

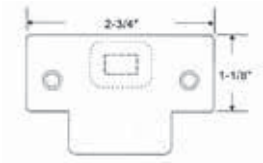

Specifications:

Ball Catches – Ball catches shall be by Doormerica model number BC2950 and BC2955 are all ball catches provided with high tension steel compression springs to provide solid engagement with strike. All ball catches provided with Phillips sheet metal screws, plated to match finish for proper ball and strike mounting. Each ball catch shall be individually wrapped.

1 YEAR LIMITED WARRANTY

Stocked Product

Item	Finish
BC2950	US3, 10B, 15
BC2955	US3, 10B, 15
BC2955T	US3, 10B, 15

Doormerica

Signs

HS1M

HS2W

HS3R

Stocked Product

Item	Description	Size
HS1M	Men's Restroom No Braille	12" x 12" x 12"
HS2W	Women's Restroom No Braille	12" Diameter
HS3R	Unisex Restroom No Braille	12" Diameter

ADA Signs

HS69M

HS69W

HS69R

HS10E

Stocked Product

Item	Description	Size
HS69M	ADA Men's With Braille	8" x 8"
HS69W	ADA Women's With Braille	8" x 8"
HS69R	ADA Unisex With Braille	8" x 8"
HS10E	ADA Exit With Braille	6" x 6"

Doormerica

Falcon

B Series - Dane Design

With Schlage C Keyway

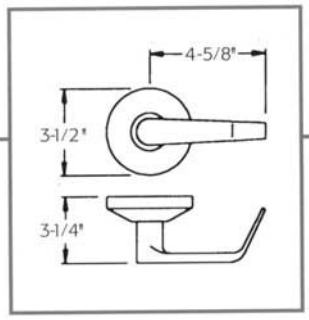

With I.C. Less Core

Features:

- **Door Thickness** 1-3/8" to 2" standard.
- **Backset** 2-3/4" BS standard, available 2-3/8" BS.
- **Specifications** Trim has heavy duty springs for lever return.
  Trim is through-bolted with screws coated with thread sealant to provide strength & resistance to loosening.
- **Keyways** Available Schlage C or I.C. less core.
- **Trim** Roses are 3-1/2" diameter
- **Strike** 4-7/8" x 1-1/4" ANSI strike standard
- **ANSI / BHMA** A156.2, series 4000 grade 2
- **UL** 1-1/2 hour B label

FUNCTIONS

			ANSI
B101		**Passage/Closet Latchset** Latch bolt by levers at all times.	F75-2
B301		**Privacy Lock** Latch bolt by levers. Outside lever locked by push button in inside lever. Rotating inside lever or closing door releases push button. Emergency release in outside lever unlocks door.	F76-2
B511		**Entry/Office Lock** Turn/push button locking. Pushing and turning button locks outside lever requiring use of key until button is manually unlocked. Push button locking. Pushing button locks outside lever until unlocked by key or by rotating inside lever. Inside lever always free. Deadlocking latch bolt.	F109-2
B581		**Storeroom Lock** Deadlocking latch bolt by lever inside or key outside. Outside lever is rigid. Inside lever is always free.	F86-2

Options

- 2 3/8" Bacsket Specify A57420 (SL), A57620 (PL), A57420D (DL)
- 5065 "T" Strike

Stocked Product

Finish 626
B101 Schlage C Keyway
B301 Schlage C Keyway
B511 Schlage C Keyway or Best prep I. C. core less core
B581 Schlage C Keyway or Best prep I. C. core less core

Falcon

D200 - Series

The new D Series deadbolt from Falcon will fit on virtually any door, thanks to an adjustable backset with an innovative lock-in-place design. Available in a Grade 1 or Grade 2 configuration, our new D Series deadbolt can be fitted with virtually any Falcon cylinder, enhances lock strength on the jamb side of the door and is easier to install than any deadbolt you've ever worked with.

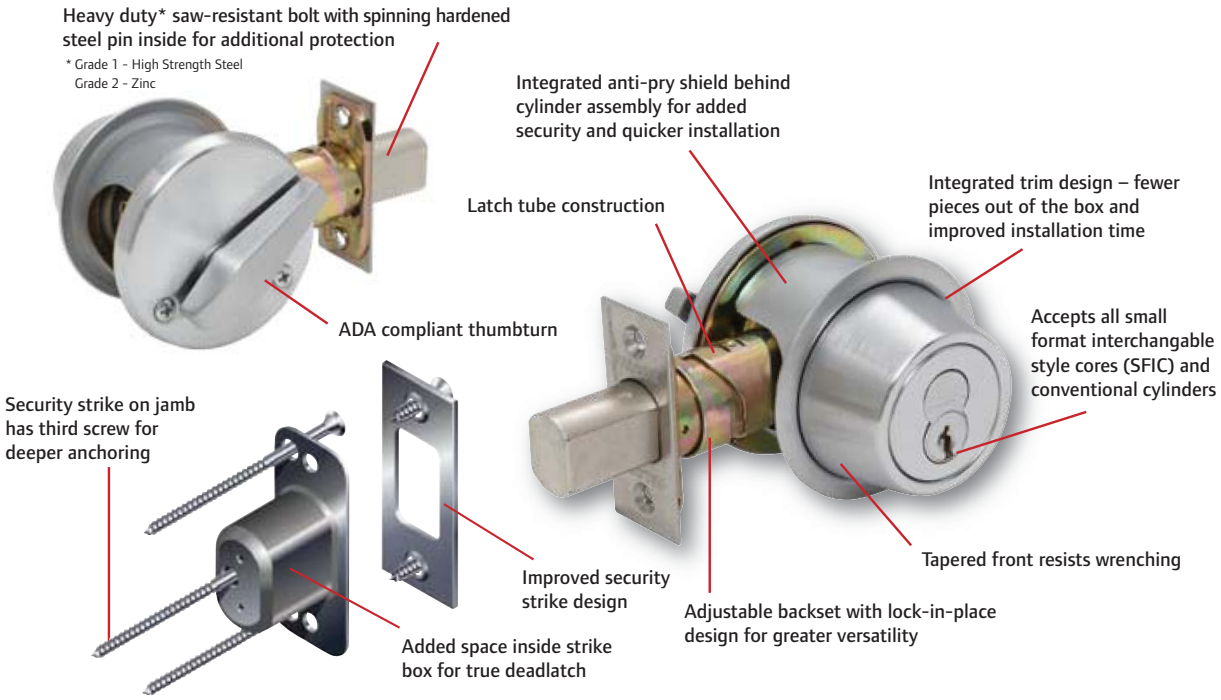

Features:

Certification	Grade 1 BHMA - ANSI A156.5, 2001, Grade 1 auxiliary lock, Available UL Listed for 3-Hour fire door
	Grade 2 BHMA - ANSI A156.5, 2001, Grade 2 auxiliary lock, Available UL Listed for 3-Hour fire door
Deadbolt	1-1/8" x 2-1/4", Square corner faceplate, 1" housing diameter, 1" throw
Strike	1-1/8" x 2-3/4", lipless, with box
Door Range	1-3/8" - 1-3/4" standard
Reinforcement	Metal dust box reinforcer with three - 3" screws
Trim Ring	1" Wrought brass or bronze, reinforced with security insert
Backset	2-3/8" and 2-3/4" adjustable

D231 Double Cylinder

Deadbolt thrown or retracted by key from either side. Bolt automatically deadlocks when fully thrown.

Stocked Product
Finish.....626
Keyway...Schlage C, I.C. Core less Core

D241 Single Cylinder x Turn

Deadbolt thrown or retracted by key or by turn. Bolt automatically deadlocks when fully thrown.

Stocked Product
Finish.....613, 626
Keyway...Schlage C, I.C. Core less Core

D271 Thumbturn x Occupancy Indicator

Deadbolt thrown or retracted by turn unit only. Occupancy indicator on outside (reads either in use or vacant with color coding). Bolt automatically deadlocks when fully thrown.

Stocked Product
Finish.....613, 626
Indicator Key 61-509

Falcon - *Heavy Duty Levers*

MA - Series

Features:

Door thickness: Standard accommodates thickness of 1-3/4" to 2-1/4".

Backset: 2-3/4" only.

Case: Cold formed steel, zinc dichromate plated, .090" thick. Optional lead wrapping available.

Hubs: Hardened steel.

Handing: Right hand is standard; left hand optional. Reversible in the field.

Cylinders: Furnished with Schlage "C" key way . IC cylinders available as an option

Bind Resistant Trim: Heavy-duty through-bolted inserts clamp the trim on the door assuring proper alignment. Designed to bottom out on 1-3/4" doors to prevent door collapse. Provided with 10-32 screws for strength and thread sealant to prevent loosening.

Latch Bolt: Two-piece brass, mechanical anti-friction bolt. 3/4" projection.

Dead Bolt: 1" throw, brass with a 1/4" thick hardened steel, freeturning, saw-resistant roller.

Faceplates: (Armored Front) 1-1/4" x 8" brass, bronze and stainless steel adjustable for door bevel. Reinforced by heavy gauge steel with stabilizing ribs.

Strike: Brass, bronze or stainless steel. Meets ANSI All5.1 for frame preparation. Strike is handed. Optional 1-1/8 lip-to-center reversible flat lip available.

ANSI/BHMA: Meets ANSI/BHMA 156.13, Series 1000. UL: 3 hour A label.

Warranty: 1 Year Limited

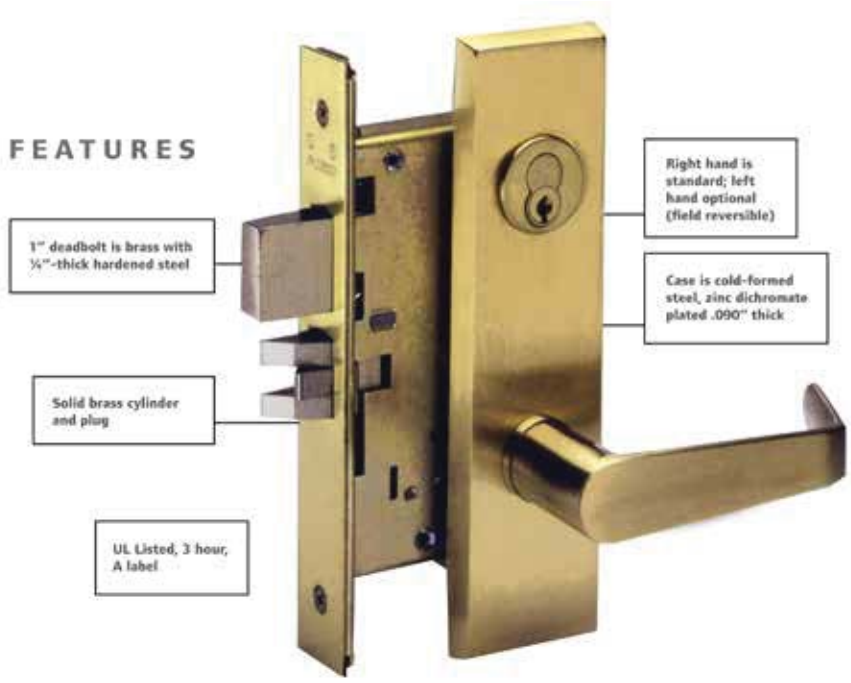

Stocked Product
Finish: 626

DESIGNS

DN
Dane-Napa

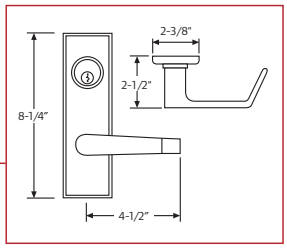

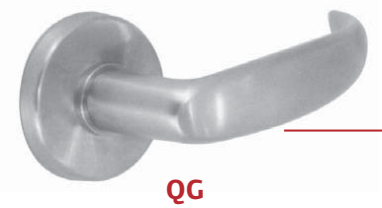

QG
Quantum-Gala

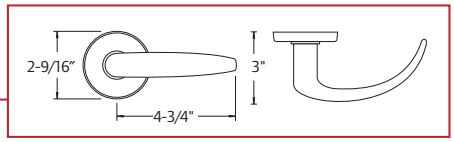

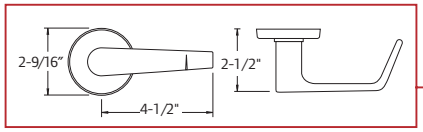

DG
Dane-Gala

Falcon - *Heavy Duty Levers*

MA - Series

FUNCTIONS			ANSI
MA101		Passage/Closet Latchset Latch bolt by knobs/levers at all times.	F01-1 F01-2
MA311		Privacy, Bedroom or Bath Lock Latch bolt by knobs/levers. Dead bolt by turn from inside and emergency key (012727-000-30) outside furnished with lock. Rotating inside knob/lever retracts both bolts.	F19-1 F19-2
MA531		**Entry/Office Lock** Latch bolt by knobs/levers except when outside knob/lever is made inoperative by buttons in face. Dead bolt by key outside and turn inside. Rotating inside knob/lever retracts both bolts. Deadlocking latch.	F10-1, F10-2 F12-1, F12-2 F20-1,
MA561		**Classroom Lock** Deadlocking latch bolt by knobs/levers. Outside knob/lever locked by key outside. Inside knob/lever always free.	
MA581		**Storeroom Lock/Exit Lock** Deadlocking latch bolt by inside knob/lever or key outside. Outside knob/lever rigid.	F07-1 F07-2

Cylinder Guards

Stocked Product

A08790/ A08794	- 000	9/32”
	- 001	13/32”
	- 002	17/32”

626 finish

A08790

A08794

Cylinder Guard Application Chart**

Door Thickness	985 1-1/8” (cyl.)	986 1-1/4” (cyl.)	987 1-3/8” (cyl.)	988 1-1/2” (cyl.)
1-1/2”	A08794-001 (13/32”)	A08794-002 (17/32”)		
1-3/4”	A08794-000(9/32”)	A08794-001 (13/32”)	A08794-002 (17/32”)	
2”		A08794-000 (9/32”)	A08794-001 (13/32”)	A08794-002 (17/32”)
2-1/4”		A08794-000 (9/32”)	A08794-001 (13/32”)	
2-1/2”			A08794-000 (9/32”)	

Note: Dimensions listed for A08794 also apply to A08790.

** Cylinder guards measure 3/16” from shoulder to top. A wavy spring washer is furnished with either cylinder guard.

** Single cylinder functions.

Falcon - *Heavy Duty Levers*

T - Series

Features:

Door Thickness: 1-3/4" to 2-1/8" standard. Thin door adapter kit (A30775-000-00) available for doors thinner than 1-3/4", please specify door thickness.
Special Order

Backset: 2-3/4" standard. 2-3/8" also available. Link (A22161-005-10) available for 5" backset.
5" backset Special Order

Mechanism: Parts constructed of brass or cold formed steel, zinc plated and dichromated for rust resistance. Springs are stainless steel.

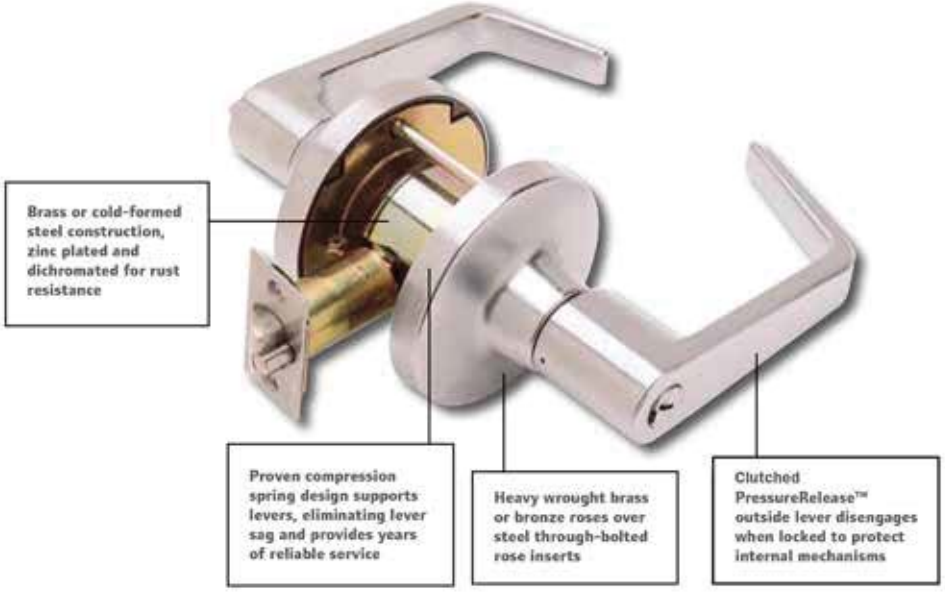

Attachment: Lock chassis secured to door by threaded mounting nuts. Completely preassembled outer trim and inner spindle assembly are through-bolted over chassis using (2) 10-32 screws. Adding rose and lever to inner spindle assembly completes installation.

Handing: Locks are non-handed.

Cylinders: Furnished with Schlage "C" keyway and IC prep options.

Trim: Roses are heavy wrought brass or bronze, installed over pressure cast rose inserts which are through-bolted through door. Levers are pressure cast (solid levers–no inserts) material finished to match mating parts.

Latches: 9/16" bolt projection, UL listed with latch faceplates 2-1/4" x 1-1/8" with square corners standard. 3/4" projection, UL listed latch with 2-3/4" backset also available. Adjustable front standard.

Strikes: 4-7/8" x 1-1/4" ANSI strike with curved lip to meet ANSI A115.2 door frame preparation standard.

Screws: Furnished with combination screws for use in wood or metal doors and frames.

Electrified Functions: Available in 24 VDC .185 AMP.

ANSI/BHMA: Meets ANSI/BHMA A156.2, Series 4000, Grade 1.

UL: 3 hour A label.

Warranty: 1 Year Limited

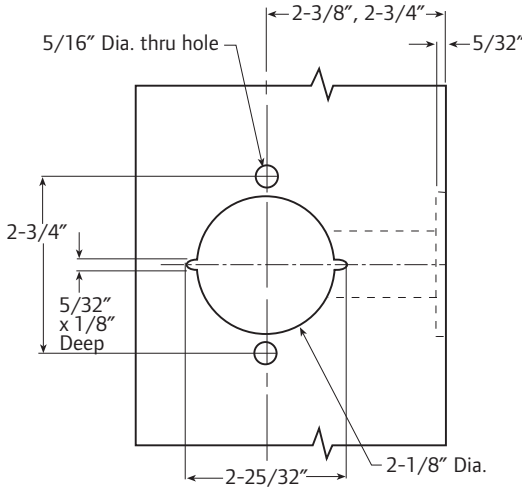

Elevation

Stocked Product

Design ..... Dane, Quantum
Finish ..... 626, (613 Dane SCH "C" Only)
Keyway..... Schlage C, (IC Except 581)
Backset ..... 2-3/4" Standard, also available 2-3/8"

Falcon - *Heavy Duty Levers*

T - Series

DESIGNS

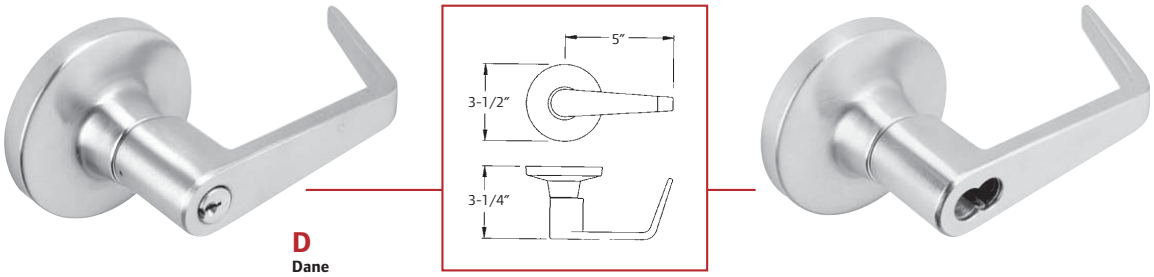

D
Dane

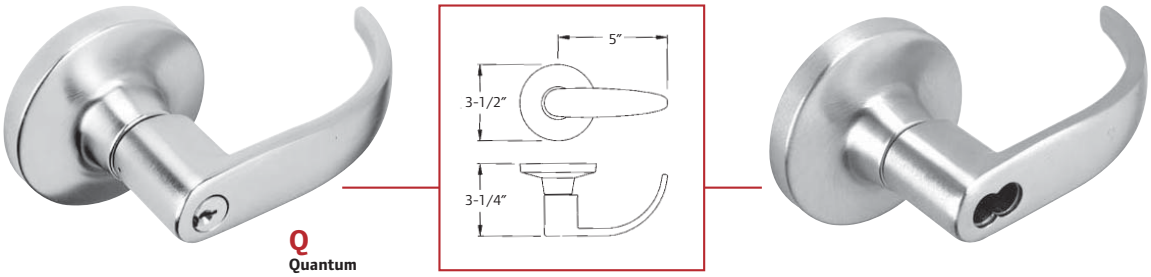

Q
Quantum

FUNCTIONS

		ANSI
T101	Passage/Closet Latchset Latch bolt by levers at all times.	F75-1
T301	Privacy Lock Latch bolt by levers. Outside lever locked by push button in inside lever. Rotating inside lever or closing door releases push button. Emergency release in outside lever unlocks door.	F76-1
T511	Entry/Office Lock Turn/push button locking. Pushing and turning button locks outside lever requiring use of key until button is manually unlocked. Push button locking. Pushing button locks outside lever until unlocked by key or by rotating inside lever. Inside lever always free. Deadlocking latch bolt.	F109-1
T581 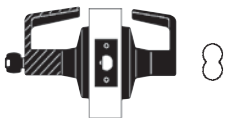	Storeroom Lock Deadlocking latch bolt by lever inside or key outside. Outside lever is inoperable. Inside lever always free.	F86-1

Falcon - *Medium Duty Levers*

W - Series Grade 2 Cylindrical Lever and Knob Locks

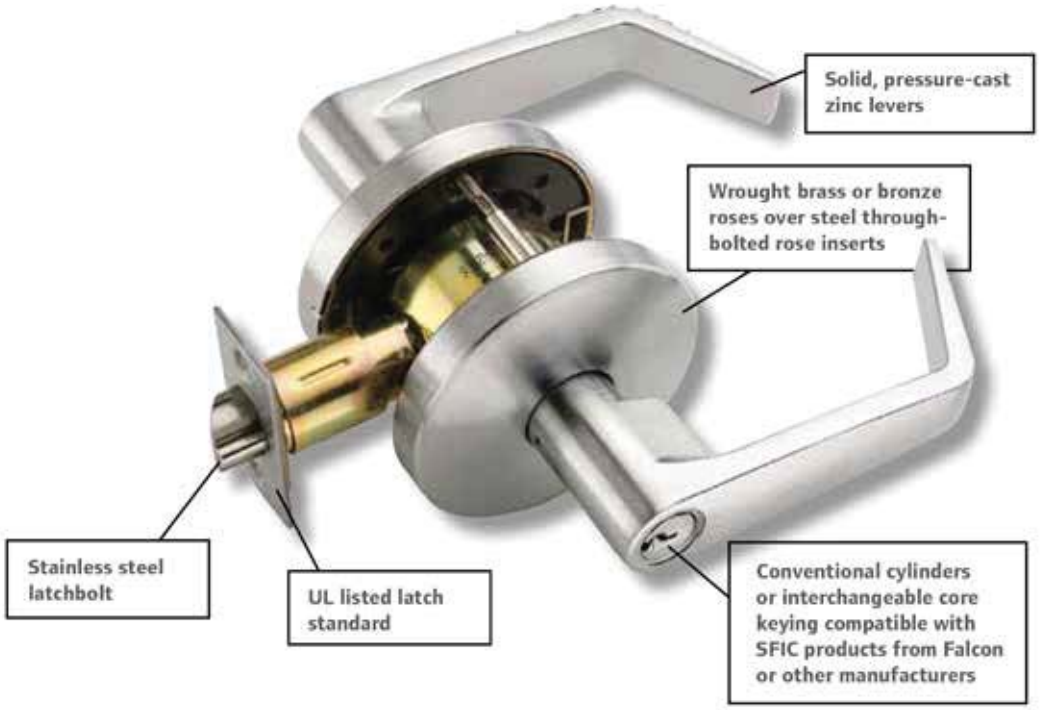

Features:

- Reliable and proven Grade 2 construction
- Heavy duty springs for better lever return and to prevent sagging
- Non-handed for easy field assembly
- Abrasive lever coating option available
- Priced to fit your opening price point
- Schlage C Masterkey available
- Manufactured to Ingersoll Rand's industry-leading quality standards

Lever Styles

Dane

Quantum

Can be suited with a variety of Falcon locks such as mortise, tubular, grade 1 cylindrical and interconnect.

Rose Diameters

Large Rose

Small Rose
(Only available in Dane Lever)

The Falcon W comes in different rose diameters to meet your customer needs. The Large Rose 3-1/2" diameter and a Small Rose 2 9/16" diameter to meet your narrow stile door requirements.

Falcon - *Medium Duty Levers*

W - Series

DESIGNS

Dane

Quantum

FUNCTIONS			ANSI
*W101	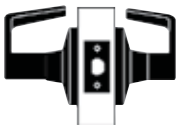	Passage latchset—Latch bolt by levers at all times.	F75
*W301		Privacy lock—Latch bolt by levers. Outside lever is locked by push button on inside lever. Rotating inside lever or closing door releases push button and frees outside lever. Inside lever is always free. Emergency release in outside lever unlocks door.	F76
W501		Entry lock—Push button locking. Button on inside locks outside lever until unlocked by key or by rotating inside lever. Closing door release push button and unlocks door. Inside lever always free. Deadlock latchbolt.	F82
*W511		Entry/office lock—Deadlocking latch bolt by levers.Turn/push button locking. Pushing and turning button locks outside lever, requiring use of a key for unlocking the door until button is manually unlocked. Pushing button locks outside lever until unlocked by key or by rotating inside lever. Inside lever is always free.	F109
*W561		Classroom lock—Deadlocking latch bolt by levers. Outside lever is locked by key in outside lever. Inside lever is always free.	F84
*W581		Storeroom lock—Deadlocking latch bolt by lever inside or key outside. Outside lever is always locked. Inside lever is always free.	F86
*W12		Single dummy trim—Single trim, surface-mounted rigid lever.	

*Available as small rose

Small Rose - stocked
Only available in Dane Lever

Stocked Product

Design	Keyway	Finish
Dane:	Schlage C, IC core stocked 626	605, 613, 625, 626
Quantum:	Schlage C	626, 613

Backset
2-3/4" Standard, also available 2-3/8"

Falcon - *Latches*

B - Series

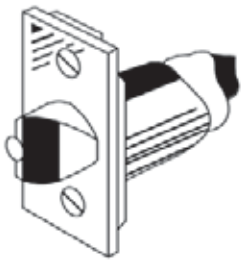

Stocked Product

P/W	DESCRIPTION	FINISH
A57420	SL, 2-3/8"BS, 1"Face Plate	626
A57420D	DL, 2-3/8"BS, 1"Face Plate	626
A57435	SL, 2-3/4"BS, 1-1/8"Face Plate	626
A57435D	SL, 2-3/4"BS, 1-1/8"Face Plate	626
A57620	SL, 2-3/6"BS, 1" Face Plate F/301	626

D200 - Series

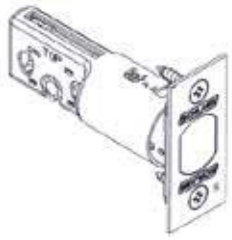

Stocked Product

P/W	DESCRIPTION	FINISH
Q330-253	ADJ, Square Corner, 1-1/8" x 2-1/4" FP	613, 626

T - Series

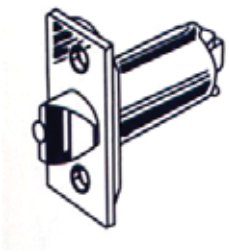

Stocked Product

P/W	DESCRIPTION	FINISH
A92320	SL, 2-3/8"BS, 1"Face Plate	613
A92320D	DL, 2-3/8"BS, 1"Face Plate	613
A98535D	SL, 2-3/4"BS, 1-1/8"Face Plate	613

W - Series

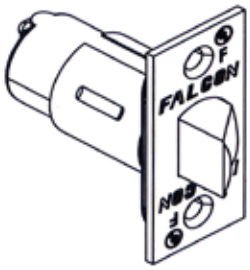

Stocked Product

P/W	DESCRIPTION	FINISH
Q330197	DL, 2-3/4"BS, 1-1/8"Face Plate	605, 613, 626
Q330201	DL, 2-3/8"BS, 1"Face Plate	613, 626
Q330203	DL, 2-3/8"BS, 1-1/8"Face Plate	613, 626
Q330206	SL, 2-3/4"BS, 1-1/8"Face Plate	605, 613, 626
Q330207	SL, 2-3/8"BS, 1"Face Plate	613, 626
Q330209	SL, 2-3/8"BS, 1-1/8"Face Plate	613, 626

Falcon - *Cylinders & Keys*

Interchangeable Standard IC core uses a single spring cover.
Core Stocked uncombinated without pins, springs, or keys.
Stock keyways A & B
Note C606ACC does not include control & operating keys

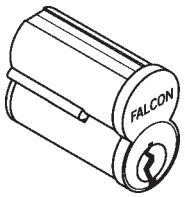

Stocked Product
C646 Uncombinated core, 6 pin, Keyways A & B, Finish 626
C647 Uncombinated core, 7 pin, Keyways A & B, Finish 626
C606ACC Temporary core
C607 Combinated core, 7pin, Keway A, Finish 626
KB6322A Operating Key for Temp core Blank
KB6092A Control Key for temp core Blank
KB6322AC Cut Operating Key F/C607
KB6092AC Cut Control Key F/C607

Key Blanks Standard

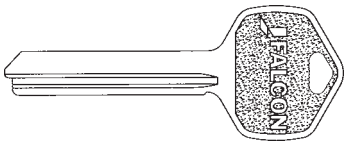

Stocked Product
KB577G Standard G Key
KB628 A & B Keyway I. C.
KB608 A & B Control Blank

C953 Rim Cylinder Housing

Horizontal tailpiece standard. May be changed to vertical

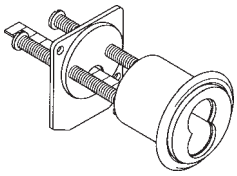

Stocked Product
C953 613, 626 Finish 6 pin or 7 pin I. C. Less core
C987 613, 626 Finish 1-3/8" F/ 6 or 7pin I. C. Less core
C988 613, 626 Finish, 1-1/2" for 6 pin or 7 pin I. C. Less core

Cylinders for IC Less Core

C987 mortise cylinder housing
Furnished with standard #5 cam

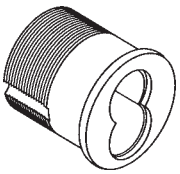

985C & 986C Mortise Cylinder

900 Series cylinders are furnished with #4 straight cam and 250 Series with #1 cloverleaf cam unless otherwise specified.

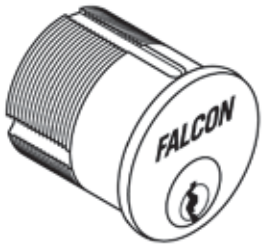

Stocked Product

985C	1-1/8"	626 Finish
986C	1-1/4"	626 Finish

CAMS Only

A09894

A09897

Stocked Product
A09894 for M531
A09897 for M561 and M581

Monarch by Falcon - *Exits*

19 Series - Rim Device

F570
Standard

2789
Dogging Key

Features:

- Part number: 19REO X Finish
- Function stocked: "EO" exit only
- Trims Separately: Note: Lever trim is handed
  - 1906T Thumb piece (new number 910)
  - 1909NL Night latch (new number 910NL)
  - 1910L Entry Lever Dane (new number 912L)
  - 914KIL BE Key in Lever(sectional) Blank Escutcheon
  - 914KIL IC Key in Lever (sectional) Lever Entry X IC core
  - 914KIL KD Key in Lever (sectional) Lever Entry
  - 914KIL NL Key in Lever (sectional) Lever Night Latch
- Finishes: Aluminum and Duro
- Length: 36" and 48"
- ANSI A156.3-2001 Grade 1 standards, UL Listed
- Cut out: 161

The Monarch 19-R Series rim device that delivers superior panic hardware with modern touchbar styling. This non-handed device covers a 161 cutout and may be used on 13⁄4" narrow stile aluminum doors.

F19 Series - Fire Rated Rim Device

F570
Standard

Features:

- Part number: F19REO X finish
- Function Stocked "EO" exit only
- Trims Separately: See page
  - 1906T Thumb piece (new number 910)
  - 1909NL Night latch (new number 910NL)
  - 1910L Entry Lever Dane (new number 912L)
  - 914KIL BE Key in Lever(sectional) Blank Escutcheon
  - 914KIL IC Key in Lever (sectional) Lever Entry X IC core
  - 914KIL KD Key in Lever (sectional) Lever Entry
  - 914KIL NL Key in Lever (sectional) Lever Night Latch
- Finishes: Aluminum and Duro
- Length: 36" and 48"
- ANSI A156.3 Grade 1
- UL for 1-1/2" hour door
- Cut out 161

The F–19 Rim fire exit device is an excellent addition to the touchbar. This device is non-handed and is listed by UL for B label fire door installations on 4'0" x 7'2" single doors and/or 8'0" x 7'2" double doors with an F–4023 removable mullion or CRF-4023.

Monarch by Falcon - *Exits*

19 Series - Vertical Rod Device

3788
Strike

Manufactured to the same exacting standards as the 19 Rim, the 19–V Exit Device complies with most exit door requirements, and is fully reversible and surface applied. This device is regularly furnished with deadlocking top latch with latch retention and square bolt at bottom.

2789
Dogging Key

Latch retention hold is in the top latch. Retainer is released when it engages the strike.

Features:

- Part number 19VEO X Finish
- Function Stocked: Exit only
- Trims Separately: Note: Lever trim is handed See Trim page
  - 1906T Thumb piece (new number 910)
  - 1909NL Night latch (new number 910NL)
  - 1910L Entry Lever Dane (new number 912L)
  - 914KIL BE Key in Lever(sectional) Blank Escutcheon
  - 914KIL IC Key in Lever (sectional) Lever Entry X IC core
  - 914KIL KD Key in Lever (sectional) Lever Entry
  - 914KIL NL Key in Lever (sectional) Lever Night Latch
- Finishes: Aluminum and Duro
- Lengths: 36” X 84” and 48” X 84”
- ANSI A156.3 2001 Grade 1 Standard; UL Listed

2130
Strike

F19 Series - Fire Rated Vertical Rod Device

3788
Strike

Manufactured to the same exacting standards as the F–19 Rim, the F–19–V Fire Exit Device complies with most exit door requirements, and is fully reversible and surface applied. This device is regularly furnished with deadlocking top latch retention and square bolt at bottom. (This device is listed by UL for B label fire door installations.)

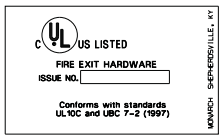

Latch retention hold is in the top latch. Retainer is released when it engages the strike. The door is in the closed position.

Features

- Part number F19VE X Finish
- Function Stocked: “EO” exit only
- Trims Separately: Note: Lever trim is handed See trim page
  - 1906T Thumb piece (new number 910)
  - 1909NL Night latch (new number 910NL)
  - 1910L Entry Lever Dane (new number 912L)
  - 914KIL BE Key in Lever(sectional) Blank Escutcheon
  - 914KIL IC Key in Lever (sectional) Lever Entry X IC core
  - 914KIL KD Key in Lever (sectional) Lever Entry
  - 914KIL NL Key in Lever (sectional) Lever Night Latch
- Finishes Aluminum and Duro
- Lengths: 36” X 84’ and 48” X 84”
- ANSI A156.3 Grade 1 standard
- UL “B” labeled 1-1/2 hour door

2130
Strike

Falcon

19 Series - Trim Designs

All Trims Supplied Less Cylinder

1910L (912) L Trim
Mortise Cylinder
1-1/8"Required

1909NL (910NL)
Rim Cylinder
Required

1906T (910TP)
Mortise Cylinder
1-1/8"Required

Stocked Product
Aluminum, Duro

914 KIL KD Entry

914 KIL BE Blank Escutcheon

914 KIL IC Entry

914 KIL NL Night Latch

Stocked Product
Aluminum, Duro

Falcon - *Exits*

25 R Series - Rim Exit Device

299 Strike

2789
Dogging Key

Cylinder Dogging

Features

- Non handed
- 299 strike standard, other strikes available on special order
- Latch bolt: Stainless Steel, ¾" throw
- Dogging Feature: 1/2 turn hex dogging standard, No thread parts to wear out
- Stock sizes: 36" and 48" width doors,
- ANSI: Certified ANSI A156.3-2001 Grade 1
- Sex Bolts: (optional) Recommended when device is used with hollow core wood, composite or light gauge hollow metal doors, For EO device specify eight (8) #2729 sex bolts. With Trim specify four (4) 2729 sex bolts
- EL function : Can be interfaced with Building security systems.

Options:

Cylinder Dogging kit: Specify 25CDK
1-1/8" Mortise cylinder not included.

Stocked Product

36" door width US3, US26, 313AN, US26D
48" door width 313AN, US26D

EL Function stocked: 36" door width 26D

F25-R Series - Fire Rim Exit Device

299F Strike

Features

- Non Handed
- "A" label 3 hours 4' 0" X 8' 0"; 8' 0" X 8'0" with F4023 Mullion
- "B" label 1-1/2" hour for 8'0" X 8')' with KRF4023 Mullion
- 299F strike standard, other strikes available on special order
- Latch bolt: stainless Steel, ¾ " throw
- Deadlocking latch bolt standard
- Stock sizes: 36" and 48" width doors
- Mounting Height: 40-1/4" form CL to finished floor
- Fasteners: All mounting screws are concealed, All machine screws standard
- Sex Bolts: (optional) Required when device is used with hollow core wood, composite or light gauge hollow metal doors, For EO device specify eight (8) #2729 sex bolts. With Trim specify four (4) 2729 sex bolts
- ANSI: Certified ANSI A156.3 2001 Grade 1 Standards
- EL function : Can be interfaced with Building security systems.

Stocked Product

36" door width US3, US26, 313AN, US26D
48" door width :313AN, 26D

EL Function stocked : 36" door width, 26D

Falcon - *Exits*

25 V Series - Vertical Rod Exit Device

Features:

- Hand:Field Reversible
- Strikes: 3788 Top strike is surface applied; 2130 bottom strike is mortised into the floor
- Latch bolt: Top stainless steel ¾ throw; Bottom bolt is ½" throw
- Latch Retention Hold: Standards with top latch
- Sex Bolts: (Optional) Recommended when device is used with hollow core wood, composite or light gauge hollow metal doors, For EO device, specify twelve (12) #2729 sex bolts,, For devices with trim specify eight (8) #2729 sex bolts'
- ANSI : Certified ANSI A156.3-2001 Grade 1 standard
- EL function : Can be interfaced with Building security systems.

Options:

Cylinder Dogging kit: Specify 25CDK
1-1/8" Mortise cylinders not included.
12" & 36" Extension rods Available.

Stocked Product

36" X 96" door size US3, US26, 313AN, US26D
48" X 96" door size 313AN, US26D

EL function stocked: 36" X 96" door size 26D

F25 V Series - Fire Vertical Rod Device

Features

- Hand: Field Reversible
- UL: "A" Label 3 hour; 8' X 10' 90 minute same egress, 8' X 10'
- Wood Door: 20 minute 8' X 10'; 90 minute 8' X 9'
- Strikes: 3788 Top strike is surface applied; 2130 bottom strike is mortised into the floor
- Latch bolt: Top stainless steel ¾ throw; Bottom bolt is ½" throw
- Deadlocking Latch bolt: Standard in top latch
- Latch Retention Hold: standard with top latch
- F25-V LBR; Less bottom rod vertical device; "A" Label 3 hour- 8' X 8' 90 minute same egress' Wood Door 20 minute 8' X 8' openings. (F-LBR Must be ordered in pairs)
- Fasteners: All mounting screws area concealed machine screws
- Sex Bolts: (Optional) Required when device is used with hollow core wood, composite or light gauge hollow metal doors, Fro EO device, specify twelve (12) #2729 sex bolts,, For deices with rim specify eight (8) #2729 sex bolts'
- ANSI: Certified ANSI A156.3 Grade 1 standard
- EL function : Can be interfaced with Building security systems.

Options:

12" & 36" Extension rods Available.

Stocked Product

F25 V Stock Finishes:	36" X 96" 313AN, US26D 48" X 96" 313 AN, US26D
F25 V LBR Stocked :	36" X 96" and 48" X 96" 313AN,US26D (Must be ordered in pairs)
EL Function stocked:	36" X 96" 26D

Falcon - *Exits*

25 M Series - Mortise Exit Device

Features:

- Hand: Field Reversible
- Strike: 1279 standards
- Latch bolt: Stainless steel, ¾ throw
- Deadlocking Latch bolt: Standard
- Dogging Feature: ½ hex turn, no thread parts to wear out
- Fasteners: All mounting screws are concealed metal screws.
- Sex Bolts: (optional) Recommended when device is used with hollow core wood, composite or light gauge hollow metal doors, For EO device specify six (6) #2729 sex bolts. With Trim specify two (2) 2729 sex bolts
- ANSI: Certified ANSI A156.3 2001 Grade 1
- Mortise Lock: Heavy wrought lock case with cast or sintered steel parts. Locks are designed to fit standard ANSI A115.1 preparation for 1-/34" thick doors Deadlocked when auxiliary bolt is depress 5/˜6"

Options:

Cylinder Dogging kit :Specify 25CDK
1-1/8" Mortise Cylinder not included.

Stocked Product
36" Width door in 26D

F25 M Series - Fire Mortise Exit Device

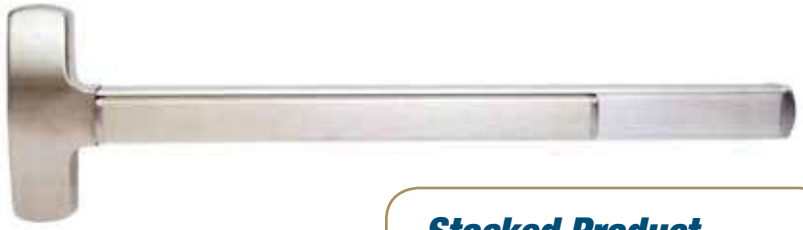

Stocked Product
36" Width door in 26D

Features:

- Hand: Field Reversible
- UL: "A" label 3 hour, 4' X 10" single doors, 8' X 10' pair of doors . (F25M X F25V) "B" Label (1-1/2 hour) with F1280 open back strike
- Strike: 1279 standard
- Latch bolt: Stainless steel, ¾ throw
- Deadlocking Latch bolt: Standard
- Fasteners: All mounting screws are concealed metal screws.
- Sex Bolts: (optional) Required when device is used with hollow core wood, composite or light gauge hollow metal doors, For EO device specify six (6) #2729 sex bolts. With Trim specify two (2) 2729 sex bolts

Falcon - *Exits*

25-C Series - Concealed Vertical Rod Device

Features:

- Hand: Field Reversible
- Strikes: 4188 mortised top, 2130 bottom standard
- Latch bolt: Top Stainless steel 3/4" throw, Bottom bolt ½" throw
- Deadlocking Latch bolt: Standard in top latch
- Latch Retention Hold; Standard in top latch
- Dogging Feature: ½ turn hex dogging standard, no threaded parts to wear out
- Fasteners: All mounting screws are concealed metal
- Sex Bolts: (optional) Recommended when device is used with hollow core wood, composite or light gauge hollow metal doors, For EO device specify six (6) #2729 sex bolts. With Trim specify two (2) 2729 sex bolts
- ANSI: Certified ANSI A156.3-2001 Grade 1 standards.
- Vertical Rods Furnished to length based on 40-1/4" horizontal CL to finished floor and a 7'0" door

Options:

Options: Cylinder Dogging kit: Specify 25CDK
1-1/8" Mortise Cylinder not included.
12" & 36" Extension Rods Available.

2789
Dogging Key

Cylinder Dogging

Stocked Product
36" X 84" US26D

Falcon - *Exits*

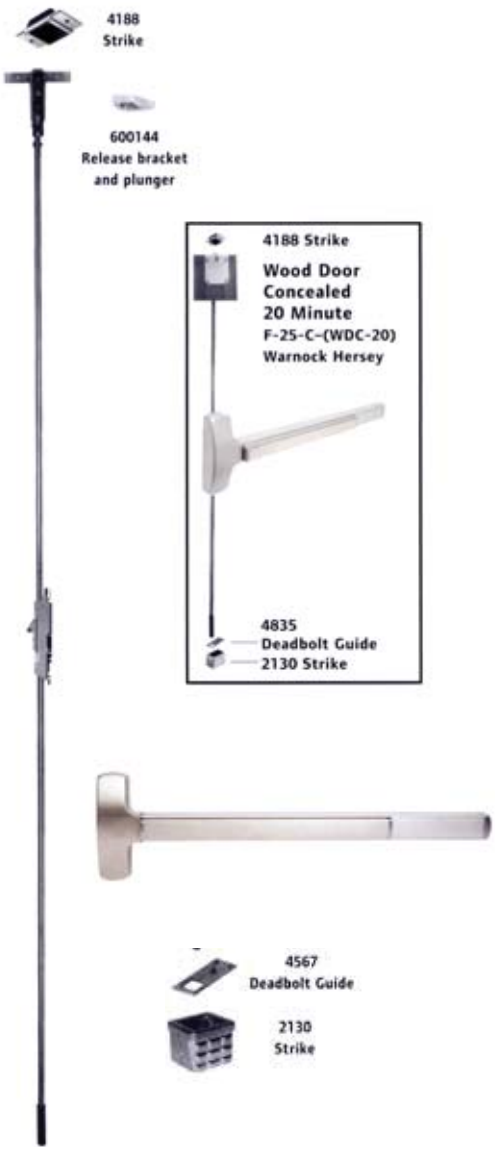

F25-C Series - Fire Concealed Vertical Rod Device
F25C-WDC Series Fire Wood Door Concealed Vertical Rod Device

Features

- Hand: Field Reversible
- UL: "A" Label 3 hour- 8' X 10' 90 minute same egress, 8' X 10' Wood Door: 20 minute 8' X 9' 90 minute 8' X 8'
- Strikes: 4188 mortise top; 2130 flush strike bottom
- Latch bolt: Top Stainless steel 3/4" throw, Bottom bolt ½" throw
- Deadlocking Latch bolt: Standard in top latch
- Fasteners: All mounting screws are concealed metal
- Sex Bolts: (optional) Required when device is used with hollow core wood, composite or light gauge hollow metal doors, For EO device specify six (6) #2729 sex bolts. With Trim specify two (2) 2729 sex bolts
- ANSI: Certified ANSI A156.3-2001 Grade 1 standards
- WDC-20: Reinforced plates supplies standard for 20 minute doors only
- Vertical Rods Furnished to length based on 40-1/4" horizontal CL to finished floor and a 7'0" door

Stocked Product

F25C	36" X 84" US26D
F25C-WDC	36" X 96" US26D, US3, US26

Falcon - *Exits*

Exit Alarm - EAK Retrofit for 25 Series devices.

Features:

The Exit Alarm/ Hardwire (EA/ HWEA) feature provides a battery powered exit alarm to allow for a simple and effective means of monitoring the use of exits while still maintaining means of egress (for code requirements). When the touch bar is depressed the alarm will sound continuously, indicating that the exit has been engaged. The exit alarm can only be reset by way of a standard 1-1/8" mortise cylinder with standard "A" (5/16" wide x 3/4" long) cam. The design of the unit will allow the single 9V battery to last for at least six months (on standby mode).

EA-25-R-EO
Exit Alarm Device

EA/HWEA Sticker

- All solid state circuitry.
- Powered by one 9V alkaline battery (supplied).
- LED indicator showing armed status of alarm.
- 10 second delay (during arming) permitting egress.
- Outside key entry without activating alarm (will not work when set up as DM option to activate EA).
- Works with rim, mortise, concealed, surface vertical rod.
- EAK retrofit kit available for your existing devices.
- Alarm sounds continuously at 90 db level for approximately
- 10 minutes prior to automatic reset. Low decibel beeping will continue at intervals until manual reset (HWEA only).
- Low battery power indication.
- UL listed.

EAK
Exit Alarm Kit

* For applicat ions on surface vertical rod devices, specify DM (Device Monitor).
* * Not recommended as a retrofit kit for your existing surface vertical.

Stocked Product
EAK 36" & 48" AL

Falcon - *Exits*

Lever Trim Only

510 L - **Entry Lock/Unlock, 1-1/4 Mortise Cylinders Not Included.**
510 NL - **Night Latch, Store Room, 1-1/4 Mortise Cylinders Not Included.**
510 BE - **Blank Escutcheon, 1-1/4 Mortise Cylinders Not Included.**
511 L - **Entry Vandal Resistant, 1-1/4 Mortise Cylinders Not Included.**
510 L FSE - **Entry Electrical Unlock, 1-1/4 Mortise Cylinders Not Included.**
510 DT - **Dummy Trim**

510L
510L-NL

510L-DT
510L-BE

Dane
Projection: 2 1⁄16"

Quantum
Projection: 3½"

Pull Trims

512TP - **1-1/4 Mortise Cylinders Not Included.**
512TP-NL - **Night Latch, 1-1/4 Mortise Cylinders Not Included.**

512TP 512TP-NL

Escutcheon: 2-1/4" x 16"
Grip: 6-1/4" C-C
Projection: 2-11/16"
Brass and Stainless Steel

Stocked Product

510L, 510BE, 510NL	Dane	US3, US26, SP313, 26D
	Quantum	SP313, 26D
510DT	Dane	26D, SP313
511L	Dane	SP313, 26D
	Quantum	SP313, 26D
510L-FSE	Dane	26D
	Quantum	26D
512TP, 512TP-NL		26D only

Falcon - *Exits*

XX Series - Rim Device

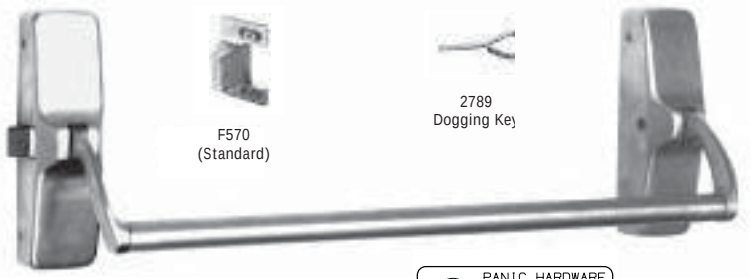

- Part number XXREO X finish
- Handed Specify LHR or RHR
- Trim available See page 6, Same trim as 18 series
- Finishes: US3, 10B and 32D
- Lengths: 48” stock; can be cut down
- Cross Bars: 1” OD
- Projections: 5” Maximum; 4” when dogged
- ANSI A156.3-2001 Grade 1 standards

The Monarch XX-R Series Rim Device is produced to meet the demanding requirements of higher traffic installations. This device is a single point, rim type latch with the traditional crossbar design.

XX series - Vertical Rod Device

- Part number XXVEO X finish
- Handed: Specify LHR or RHR
- Trim available; See page 6, same trim as 18 series
- Finishes: US3, 10B, 32D

The Monarch XX-V Series Vertical Rod Device is designed to meet the demanding requirements of higher traffic installations.The XX-V device is a surface-applied (including strikes) vertical rod type with the traditional crossbar design.

Falcon - *Exits*

XX - Trim Designs

All Trims Supplied Less Cylinder

812L Trim

812L Dane
Rim Cylinder Required

812L Quantum
Rim Cylinder Required

812L BE Dane

Specify:
812LR - Rim
812LV - Vertical

Stocked Product
10B, 32D
US3 DANE ENTRY

820 NL Vanguard and Trim

Rim Cylinder Required

Stocked Product
10B, 32D

Falcon

19, 25, and XX Accessories and Options

F-4023 Shown

Removable Mullion

- The F4023, KRF-4023 and KR-4023 steel mullions are for use with the 19-R, 25-R, and XX-R devices on double door openings. Advantage: Increased security and tighter closure. Minimizes door warpage and sag. Regulates the flow of in-and-out traffic.
- Falcon removable mullions are easily removed and reinstalled for full width access.
- Rim devices are used on both leaves, attaining a perfectly symmetrical opening.
- The mullion assembly consists of a mullion, top and bottom mounting brackets and a screw pack.
- The F4023 and KRF-4023 fire-rated mullions also include four stabilizer blocks as required for labeled installations.
- Mullions may be cut on the job for doors under stock lengths.
- KR Mullions require 11⁄4" mortise cylinder with standard A cam.

Features

- Mullion fittings – ductile iron.
- F4023, 4023, KRF-4023 and KR-4023– 2" x 3" x height.
- 2923 mullion - 1-1/2' x 2-1/2' x height.
- Prime coat only.
- 7' or 8' door opening standard, other door opening as specified.

Cylinders
- Cylinder supplied only when specified.
- Cylinders keyed different unless specified keyed alike.

Sex Bolts
- 325 (1⁄4"-20 Thread)
- 425 (#10-24 Thread)

DOUBLE DOOR APPLICATION

Strike	Installed With	Min. Stile	B *
299	2923 mullion	4 1⁄8"	3"
299	4023 mullion	4 3⁄8"	3 1⁄4"
299-F	F-4023 mullion	4 3⁄8"	3 1⁄4"
499-F	F-4023 mullion	4 1⁄2"	3 5⁄16"
264	2923 mullion	4"	2 7⁄8"
264	4023 mullion	4 1⁄4"	3 1⁄8"
1439	2923 mullion	3 7⁄8"	2 3⁄4"
1439	4023 mullion	4 1⁄8"	3"
1606	2923 mullion	4 1⁄4"	2 5⁄8"
1606	4023 mullion	4 1⁄2"	2 7⁄8"
1609	Surface 25-V	4"	2 3⁄8"

*Backset to vertical center line on the device.

Stocked Product

4023,F4023	7'2" & 8'0"	Prime Coat
KR4023,KRF4023	7'2" & 8'0"	Prime Coat

Falcon

8200 Series - Low Energy Operator

Designed to fit perfectly.

The small footprint and elegant design of the Falcon 8200 Series make it a perfect solution for a range of applications.

- Assisted living
- Retail
- Restaurants
- Hospitality
- Small office
- Ambulatory care

Features:

SmartLatch – Senses and overcomes external pressure conditions with a graduated energy assist for secure latching.

Push 'n' Go – Selectable feature allows door to open automatically as soon as it feels pressure.

Open Position Learning – Automatically sets the opening position to eliminate wall and door damage.

Obstacle Obstruction Detection – Safety feature stops and reverses door direction when distress or an obstruction is sensed.

Pre-Load Strike Assist – Removes load on strike lip with a one second delay allowing the door to release and automatically open.

LED Light Illumination – Light illumination on control box signals accurate installation and helps with connection diagnostics.

On Board Power Supply (12 VAC) – Powers the accessories without the need to install an external power supply.

Adjustable features:

- Hold-open time delay
- Backcheck/latch position
- Backcheck speed
- Opening/closing speed

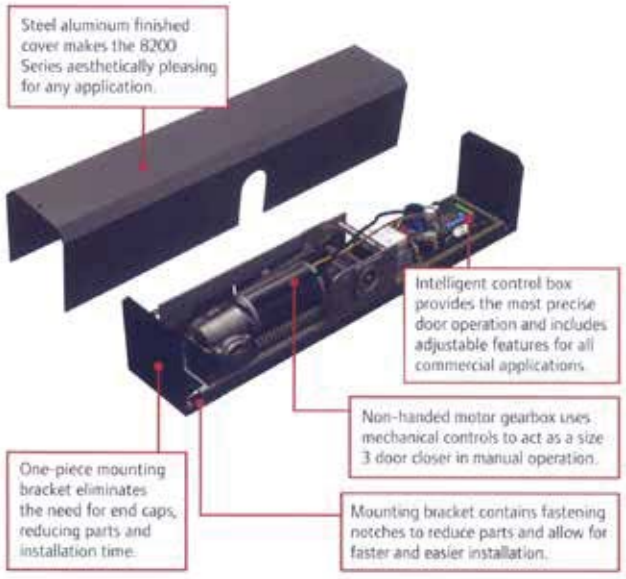

Stocked Product

8231 Pull side operation
8242 Push side operation

Finish: aluminum

Dor-O-Matic by Falcon - *Closers*

SC61 Series - Light to Medium Duty Closer

Features:

- Meets ANSI A1117.1
- ANSI/BHMA A156.4, Grade 1
- UL Listed
- 1-3/8" diameter piston
- Closer mounts hinge side, top jamb or parrallel arm when either the Rw/PA or Hw/PA arm is specified.
- Adjustable sizes 1-4
- Single piece cast aliminum body
- Staked valves
- Non-handed left or right swinging doors
- Separate adjustable general speed, latch speed, and backcheck
- Heat-treated steel piston
- Heat-treated pinion
- UL 10C approved fluid
- Universal screw pack
- 10-year warranty

With Cover

Stocked Product
SC61 Aluminum, Dark Bronze

SC80 Series - Medium Duty Closer

Features:

- Meets A156.4, Grade 1 Standard
- 1-3/8" diameter piston
- Ready to mount hinge side, top jamb or parrallel arm configurations
- Arm options: regular
- Suitable for interior doors up to 48" (1219 mm) wide, exterior doors up to 36" (914 mm) and can be adjusted to meet the ADA accessability requirements
- Single piece cast aliminum body
- Staked valves
- Non-handed left or right swinging doors
- Separate adjustable general speed, latch speed, and backcheck
- Heat-treated steel piston
- Heat-treated pinion
- Cover is high-impact UL listed fire retardant plastic that meets UL 10C and UBC-7-2 (1997) fire test
- UL 10C approved fluid
- Universal screw pack
- 10-year warranty

Full Cover

Stocked Product
SC81 Aluminum, Dark Bronze

Dor-O-Matic by Falcon - *Closers*

SC90 Series - Light Duty Closer

Features:

- Meets A156.4, Grade 1
- Ready to mount hinge side, top jamb or parrallel arm configurations
- Arm options: regular
- Single piece cast aliminum body
- Non-handed left or right swinging doors
- Separate adjustable general speed and latch speed
- Heat-treated steel piston
- Heat-treated pinion
- UL 10C approved fluid
- Universal screw pack
- 10-year warranty

Stocked Product
SC91 Aluminum, Dark Bronze

Falcon - *Actuators*

8310-844 - Series

Transmission Kit

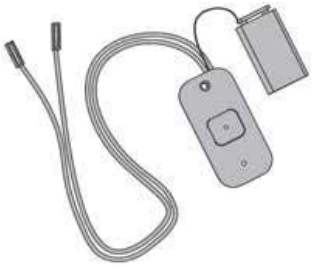

8310-856T - Series

Round Surface 4-1/2" Actuator

8310-865 - Series

Wireless Receiver

8310-868S - Series

4-1/2" Box only

Glynn Johnson

90 Series Surface Heavy Duty Overhead Door Holders/Stops

90 series door holders and stops provide long lasting protection for doors, frames and hardware. All models incorporate a heavy-duty channel/slide-arm design and offset jamb bracket. This design allows for simple field modification.

When the Hold-Open function is not a requirement, the Stop only model provides a reliable method of door control. The Stop only models may be used on fire doors.

Stocked Product

Item #	Size	Finish
904S	4	32D
905S	5	32D

Optional Functions: Hold Open (H), Friction (F)
Special Order: Sizes 2,3,6

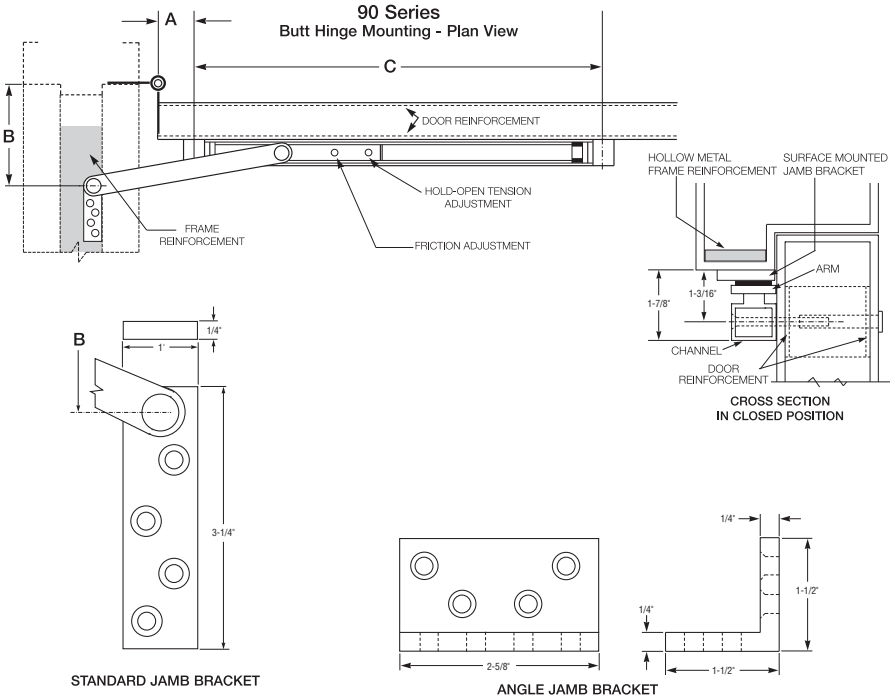

90 Series Sizing Chart								
	BUTTS/OFFSET PIVOTS				CENTER HUNG			
SIZE	DOOR OPENING	STOP ONLY	HOLD OPEN	FRICTION	DOOR OPENING	STOP ONLY	HOLD OPEN	FRICTION
1	-----	-----	-----	-----	-----	----	----	----
2	23-1/16"–27"	902S	902H	902F	27-1/16"–33"	902S	902H	902F
3	27-1/16"–33"	903S	903H	903F	33-1/16"–39"	903S	903H	903F
4	33-1/16"–39"	904S	904H	904F	39-1/16"–45"	904S	904H	904F
5	39-1/16"–45"	905S	905H	905F	45-1/16"–51"	905S	905H	905F
6	45-1/16"–51"	906S	906H	906F	51-1/16"–59"	906S	906H	906F

Note: This chart illustrates the most common types of hinging and door opening sizes. For unusual door details, contact Glynn-Johnson for availability.

BHMA/ANSI, A156.8 & FED. Spec. Cross Reference		
G-J Model	BHMA*	FED. Spec.
902 - 906H	C02511	1161
902 - 906S	C02541	1161A
902 - 906F	C02531	—

** First numeral (0) designates optional material.*

To specify:
Brass material, change 0 to 1 (i.e. C12511)
Stainless Steel material, change 0 to 5 (i.e. C52511)
Steel material, change 0 to 8 (i.e. C82511)

DOORS & SPECIALTIES CO.
COMMERCIAL DOORS • FRAMES • HARDWARE

Glynn Johnson

100 series Heavy Duty Concealed Overhead Door Holders/Stops

100 series provide a wide range of optional features and are ideal for use on entrance and vestibule doors, large doors, or door subject to abuse. These models are also furnished with an offset style jamb bracket designed for heavy duty applications, 100 series models will provide long lasting protection to doors, frames, hinges and other hardware. Templates provided allow for variable mounting positions, ranging from 85 degrees to 110 degrees of opening.

100 series is non handed

When the Hold-Open function is not required, the Stop-Only function provides the same effective door control. Can be used on fire doors. The friction tension is adjusted using an allen wrench and an open end wrench.

Stocked Product

S Series Stop only

Item #	Size	Finish
102S	2	32D
103S	3	32D
104S	4	32D

Optional Functions: Hold Open (H), Friction (F)
Special Order: Sizes 1,5,6
Contact sales department for other finishes

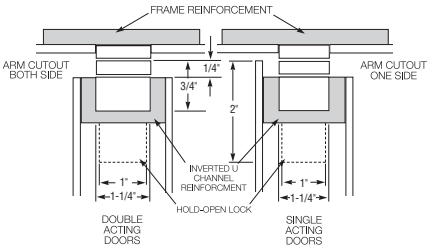

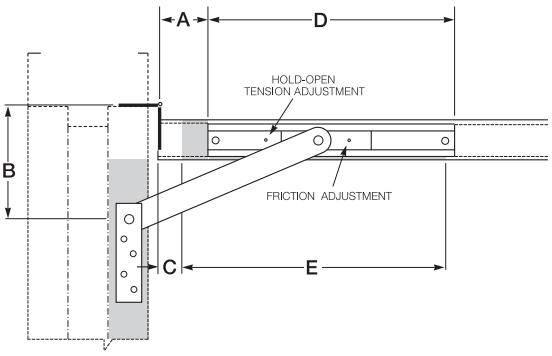

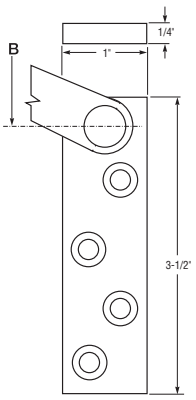

STANDARD JAMB BRACKET

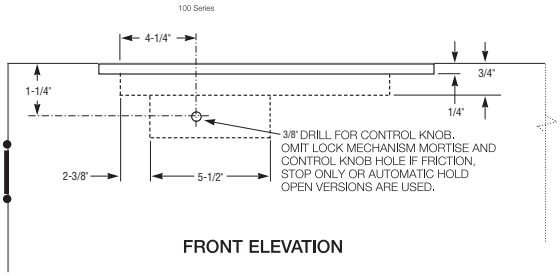

FRONT ELEVATION

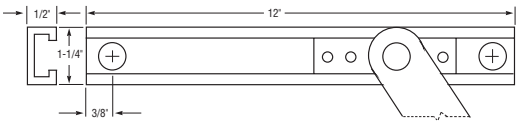

OPTIONAL JAMB BRACKET "ADJ"

100 Series Sizing Chart

	BUTTS/OFFSET PIVOTS				CENTER HUNG			
SIZE	DOOR OPENING	STOP ONLY	HOLD OPEN	FRICTION	DOOR OPENING	STOP ONLY	HOLD OPEN	FRICTION
1	18"–23"	101S*	101H*	101F*	-----	----	----	----
2	23-1/16"–27"	102S*	102H*	102F*	-----	-----	-----	-----
3	27-1/16"–33"	103S	103H	103F	33-1/16"–39"	103S	103H	103F
4	33-1/16"–39"	104S	104H	104F	39-1/16"–45"	104S	104H	104F
5	39-1/16"–45"	105S	105H	105F	45-1/16"–51"	105S	105H	105F
6	45-1/16"–54"	106S	106H	106F	51-1/16"–59"	106S	106H	106F

Note: This chart illustrates the most common types of hinging and door opening sizes. For unusual door details, contact Glynn-Johnson for availability.

**These sizes are not available for use with offset pivots. Also not available with the ADJ option.*

BHMA/ANSI, A156.8 & FED. Spec. Cross Reference		
G-J Model	BHMA*	FED. Spec.
101-106 H	C01511	1160
101-106 S	C01541	----
101-106 F	C01531	----

** First numeral (0) designates optional material.*

To specify:
Brass material, change 0 to 1 (i.e. C11511)
Stainless Steel material, change 0 to 5 (i.e. C51511)

BHMA

All 100 series models are designed for heavy-duty applications and far exceed BHMA cycle test and force test requirements for Grade 1 holders and stops.

Glynn Johnson

410 Series Medium Concealed Overhead Door Holders/Stops

410 series holders and stops are designed for medium to light duty applications, They are ideal for openings that are subject to normal activity, providing protection for the door, frame and hinges

All models incorporate the popular channel/slide-arm design and offset jamb brackets.

Non handed

When Hold-Open function is not a requirement, may be used on fire doors.

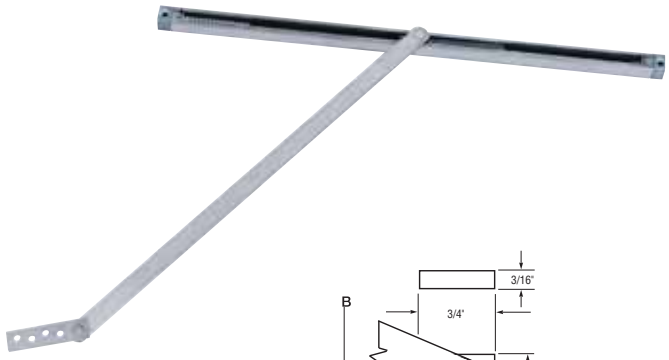

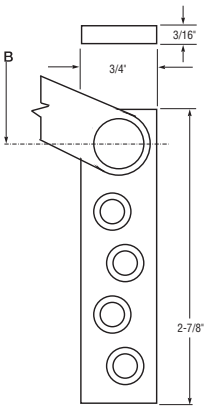

STANDARD JAMB BRACKET

Stocked Product

Item #	Size	Finish
412S	2	32D
413S	3	32D
414S	4	32D

Optional Functions: Hold Open (H), Friction (F)
Special Order: Sizes 1,5,6

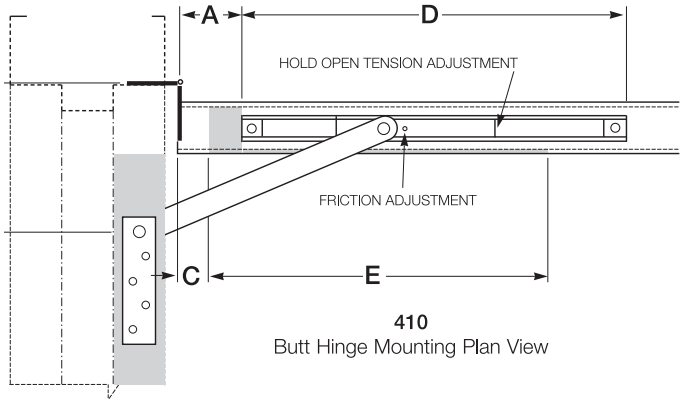

410
Butt Hinge Mounting Plan View

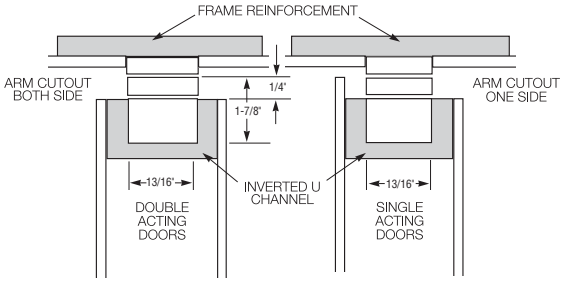

CROSS SECTION IN CLOSED POSITION

410 Series Sizing Chart

	BUTTS/OFFSET PIVOTS				CENTER HUNG			
SIZE	DOOR OPENING	STOP ONLY	HOLD OPEN	FRICTION	DOOR OPENING	STOP ONLY	HOLD OPEN	FRICTION
1	18"–23"	411S	411H	411F	-----	-----	-----	-----
2	23-1/16"–27"	412S	412H	412F	-----	-----	-----	-----
3	27-1/16"–33"	413S	413H	413F	33-1/16"–39"	413S	413H	413F
4	33-1/16"–39"	414S	414H	414F	39-1/16"–45"	414S	414H	414F
5	39-1/16"–45"	415S	415H	415F	45-1/16"–51"	415S	415H	415F

Note: This chart illustrates the most common types of hinging and door opening sizes. For unusual door details, contact Glynn-Johnson for availability.

The template information on this page is for reference only and is not intended to serve as an installation template. For complete dimensional information, refer to Glynn-Johnson template book.

BHMA/ANSI, A156.8 & FED. Spec. Cross Reference		
G-J Model	BHMA*	FED. Spec.
411-415 H	C04511	1166
411-415 S	C04541	1166A
411-415 F	C04531	1164

** First numeral (0) designates optional material.*

To specify:
Brass material, change 0 to 1 (i.e. C14511)
Stainless Steel Material, change 0 to 5 (i.e. C54511)
Steel material, change 0 to 8 (i.e. C84511)

Glynn Johnson

450 series Medium Duty Surface Overhead Door Holders/Stops

450 series holders and stops are designed for medium to light duty applications, They are ideal for openings that are subject to normal activity, providing protection for the door, frame and hinges

All models incorporate the popular channel/slide-arm design and offset jamb brackets. The improved design makes it easier to change functions in the field.

Non handed

450 F Friction Hold-Open models provide an alternative holding method ideal for patient room doors, closet doors or similar applications where multiple Hold-Open positions are desired.

450S Stop only is used when Hold-Open function is not required. The Stop-Only function provides the same effective door control without keeping the door held open. May be used on fire doors.

Stocked Product

450 S (Stop-Only) and F (Friction Hold Open)

Item #	Size	Finish
452	2	32D
453	3	32D
454	4	32D

Optional Functions: Hold Open (H),
Special Order: Sizes 1, 5, 6
Contact sales department for other finishes

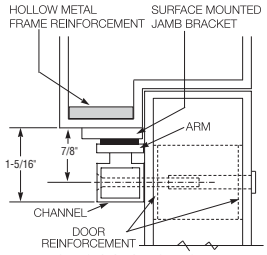

CROSS SECTION
IN CLOSED POSITION

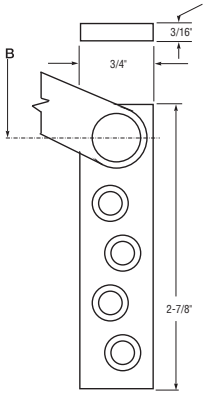

STANDARD JAMB BRACKET

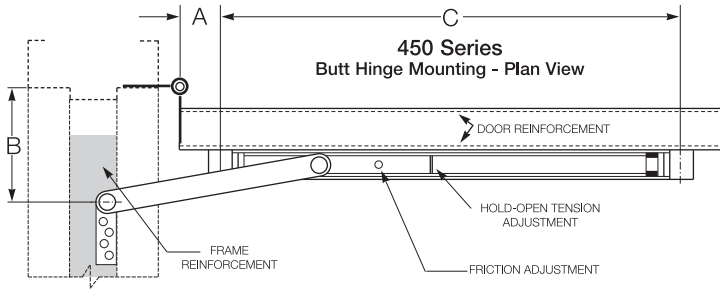

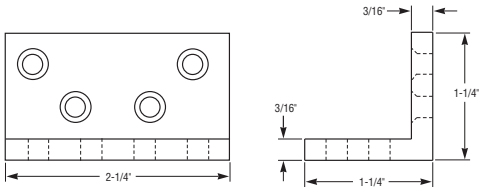

ANGLE JAMB BRACKET

450 Series Sizing Chart								
BUTTS/OFFSET PIVOTS					CENTER HUNG			
SIZE	DOOR OPENING	STOP ONLY	HOLD OPEN	FRICTION	DOOR OPENING	STOP ONLY	HOLD OPEN	FRICTION
1	18"–23"	451S	451H	451F	23-1/16"–27"	451S	451H	451F
2	23-1/16"–27"	452S	452H	452F	27-1/16"–33"	452S	452H	452F
3	27-1/16"–33"	453S	453H	453F	33-1/16"–39"	453S	453H	453F
4	33-1/16"–39"	454S	454H	454F	39-1/16"–45"	454S	454H	454F
5	39-1/16"–45"	455S	455H	455F	45-1/16"–51"	455S	455H	455F

Note: This chart illustrates the most common types of hinging and door opening sizes.
For unusual door details, contact Glynn-Johnson for availability.

The template information on this page is for reference only and is not intended to serve as an installation template.
For complete dimensional information, refer to Glynn-Johnson template book.

BHMA/ANSI, A156.8 & FED. Spec. Cross Reference		
G-J Model	BHMA*	FED. Spec.
451-455 H	C05511	1166
451-455 S	C05541	1166A
451-455 F	C05531	1164

** First numeral (0) designates optional material.*

To specify:
Brass/bronze material, change 0 to 1 (e.e. C15511)
Stainless Steel Material, change 0 to 5 (i.e. C55511)
Steel material, change 0 to 8 (i.e. C85511)

Hager

Commercial Screws For 1279 Series

Stocked Product

	Finishes	Quantity Per Box/Bag
MS050 Machine Screw 1/2" x 12-24	US11 (10A), 26D, US3, 13P	100
WS075 Wood Screw 3/4" x 12 FPHW	US11 (10A), US2C (26D), US3, US4, 15, 26, 13P	400
WS125 Wood Screw 1 1/4" x 12 FPHW	US11 (10A), 15, 26, 26D, US3, US4	100
WS200 Wood Screw 2" x 12 FPHW	US11 (10A), 15, US3, US2C (26D)	400

Residential Wood & Machine Screws

Stocked Product

	Finishes	Quantity Per Box/Bag
1300 Machine Screw 1/2" x 10-24	US3	1,200
*2617 Wood Screw 3/4" x 9	10A, 10B, 15, 15A, 26, 26D, 1D, 2D, 3, 4, 5 (ABA)	600
2817 Wood Screw 3/4" x 9	10A, 15, 15A, 26, 26D, 1D, 2D, 3, 4, 5 (ABA)	800
2817-1 Wood Screw 1" x 9	10A, 10B, 15, 15A, 26, 26D, 1D, 2D, 3, 4, 5 (ABA)	800

Hager

700 - 3 Knuckle Commercial Hinges

Plain Bearing - Standard Weight
For use on medium weight doors or door requiring low frequency service

Gauge of Metal:	0.134
Hole Count:	8
Screw Size:	Machine 1/2 x 12-24
	Wood 1-1/4 x 12
ANSI	A2133

Stocked Product
4-1/2 x 4-1/2 10B, 26D

AB700 - 3 Knuckle Commercial Hinges

Concealed Anti-Friction Bearing - Standard Weight
For use on medium weight doors or door requiring medium frequency service

Hinge size:	Inches 4-1/2 x 4-1/2
	mm 114 x 114
Gauge of Metal:	0.134
Hole Count:	8
Screw Size:	Machine 1/2 x 12-24
	Wood 1-1/4 x 12
ANSI	A8112

Stocked Product
4-1/2 x 4-1/2 10B, 26D

AB750 - 3 Knuckle Commercial Hinges

Concealed Anti-Friction Bearing - Heavy Weight
For use on heavy weight doors or door requiring high frequency service

Hinge size:	Inches 4-1/2 x 4-1/2
	mm 114 x 114
Gauge of Metal:	0.180
Hole Count:	8
Screw Size:	Machine 1/2 x 12-24
	Wood 1-1/4 x 12
ANSI	A8111

Stocked Product
4-1/2 x 4-1/2 10B, 26D

BB1168 - Full Mortise Hinge

Template Hole Pattern
Full Mortise Hinge
Ball Bearing Heavy Weight
Steel with Steel Pin
ANSI A8111

Hinge Thickness	.180 4-1/2" x 4-1/2"
	.190 5" x 4-1/2"
Screw Size:	Machine 1/2 x 12-24
	Wood 1-1/4 x 12
Case lot	24 each
Packaging	All machine, 1/2 wood screws

Stocked Product
- BB1168 4 1/2" x 4 1/2" 10B, 26D
- BB1168 5" x 4 1/2" 10B, 26D
- Above sizes available NRP

Hager

1191 - Full Mortise Hinge

Stocked Product
- 1191 3-1/2" x 3-1/2" 3 pk. 10D
- 1191 4" x 4" 3 pk. 10D, 32D

Features:
5 Knuckle
Plain Bearing
Standard Weight
Brass with Brass Pin: ANSI A2133
Stainless Steel with Stainless Steel Pin: ANSI A5133

BB1191 - Full Mortise Hinge

Stocked Product
- BB1191 4 1/2" x 4 1/2" 26D, 32D
- Also available NRP

Case lot 48 each
Packaging All machine, 1/2 wood screws

Features:
Template Hole Pattern
Full Mortise Hinge
Ball Bearing Medium Weight
Brass with Brass Pin
ANSI A2112
Stainless Steel with Stainless Steel Pin
Screw Size: Machine 1/2 x 12-24
Wood 1-1/4 x 12
ANSI A5112
Hinge Thickness .134

BB1129 - Half Mortise Hinge

Stocked Product
- NBB1129 4 1/2" 26D with NRP

Features:
Half Mortise Hinge
Ball Bearing Standard Weight
Steel with Steel Pin
Hinge Thickness .134
Screw Size: Machine 1/2 x 12-24
ANSI A8212 screws

BB1173 - Half Surface Hinge

Stocked Product
- BB1173 4 1/2" 26D with NRP

Features:
Full Mortise Hinge
Ball Bearing Standard Weight
Steel with Steel Pin
Hinge Thickness .134
Screw Size: Machine 1/2 x 12-24
Wood 2 x 1/4-20
ANSI A8212 screws

BB1199 - Full Mortise Hinge

Stocked Product
- BB1199 4 1/2" x 4 1/2" 10B, 26D, 32D
- BB1199 5" x 4 1/2" 10B, 26D
- Above sizes stocked NRP

Case lot 24 each
Packaging All machine, 1/2 wood screws

Features:
Template Hole Pattern
Full Mortise Hinge
Ball Bearing Heavy Weight
Brass with Stainless Steel Pin
5 Knuckle 4 Ball Bearing
Hinge Thickness .180 4-1/2" x 4-1/2"
.190 5" x 4-1/2"
Screw Size: Machine 1/2 x 12-24
Wood 1-1/4 x 12

Hager

1250 - Full Mortise Spring Hinge

Stocked Product

• 1250 4" x 4"	10B, 15, 26D
• 1250 4 1/2" x 4 1/2"	US10A, US10B, US15, US26D, US3, US4, USP

Case lot 48 each
Packaging All wood,
All machine screws

Features:
Template Hole Pattern
Full Mortise Spring Hinge
Square Corner
Steel ANSI K81071F
Hinge Thickness .134
Screw Size: Machine 1/2 x 12-24
Wood 1-1/4" x 12

1251 - Full Mortise Spring Hinge

Stocked Product

• RC1251 3 1/2" x 3 1/2"	US3, US4, US10D, US15,US26D
• RC1251 4" x 4"	US10B, US10D, US15,US15A, US26D, US3, US4

Case lot 48 each
Packaging All wood, 1/2 machine screws

Features:
Template Hole Pattern
1/4" Radius
Steel ANSI K81071F
Hinge Thickness .134
Screw Size: Machine 1/2 x 12-24
Wood 1-1/4 x 12

1279 - Full Mortise Hinge

Stocked Product

• 1279 3 1/2" x 3 1/2"	10B, 10D, 15, 15A, 26, 26D, US3, USP, WHT
• 1279 4" x 4"	10A, 10B, 10D, 15, 15A, 26, 26D, US3, US5, USP, WHT, L1
• 1279 4 1/2" x 4 1/2"	10A, 10B, 10D, 15, 15A, 26, 26D, US3, US4, USP

• Above sizes 4" x 4",4 1/2" x 4 1/2" , available NRP
• 1279 special H2H Finish (Galvanized)
3 1/2" x 3 1/2", 4" x 4",4 1/2" x 4 1/2" NRP only

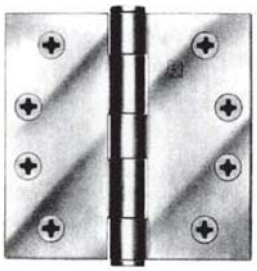

Features:
Template Hole Pattern
Plain Bearing Standard Weight
Steel with Steel Pin
ANSI A8133
Hinge Thickness 3-1/2 x 3-1/2 .119
4 x 4 .129
4-1/2 x 4-1/2 .134
Case lot 48 each 4 x 4, 4-1/2 x 4-1/2, 100 per case 3-1/2 x 3-1/2
Packaging All wood, 1/2 machine screws
Screw Size for 3-1/2 x 3-1/2 : Machine 1/2 x 10-24
Wood 1 x 9
Screw Size for 4 x4 , 4-1/2 x 4-1/2" Machine 1/2 x 12-24
Wood 1-1/4 x 12

BB1279 - Full Mortise Hinge

Stocked Product

• BB1279 4" x 4"	10A, 10B, 10D, 15, 15A, 26, 26D, US3, USP
• BB1279 4 1/2" x 4 1/2"	10A, 10B, 10D, 15, 15A, 26, 26D, US3, US4, USP
• BB1279 5" x 4 1/2"	10B, 26D
• BB1279 5" x 5"	10B, 26D

Above sizes available NRP

Case lot 48 each
Packaging All wood, 1/2 machine screws

Features:
Template Hole Pattern
Ball Bearing Standard Weight
Steel with Steel Pin
ANSI A8112
Hinge Thickness 4 x 4 .129
4-1/2 x 4-1/2 .134
Screw Size for 4 x 4 , 4-1/2 x 4-1/2: Machine 1/2 x 12-24
Wood 1-1/4 x 12

Hager

RC1279 - Full Mortise Hinge

Stocked Product

- RC1279 3 1/2" x 3 1/2" 10A, 10B, 10D, 15, 15A, 26, 26D, US3, US4, US5, USP
- RC1279 4" x 4" 10A, 10D, 10B, 15, 15A, 26, 26D, US3, US4, US5, USP, L1, WHT
- 4" x 4" NRP stocked 10A, 15, 26D, US3, US4, 10B

Case lot 3-1/2 x 3-1/2 100 each
4 x 4 48 each
Packaging All wood, 1/2 machine screws

Features:

Template Hole Pattern
Plain Bearing 1/4" Radius
Available with NRP (non removable pin)
Hinge Thickness 3-1/2 x 3-1/2 .119
4 x 4 .129
Screw Size for 3-1/2 x 3-1/2 : Machine 1/2 x 10-24
Wood 1 x 9
Screw Size for 4 x4 , 4-1/2 x 4-1/2: Machine 1/2 x 12-24
Wood 1-1/4 x 12

BBRC1279 - Full Mortise Hinge

Stocked Product

- BBRC1279 4" x 4" 10A, 10B, 10D, 15, 26, 26D, US3, US4, L2
- Above stocked NRP 10A, 26D

Case lot 48 each
Packaging All wood, 1/2 machine screws

Features:

Template Hole Pattern
Ball Bearing 1/4" Radius
Available with NRP (non removable pin)
Hinge Thickness 4 x 4 .129
Screw Size: Machine 1/2 x 12-24
Wood 1-1/4 x 12

SQ1541/RC1541/RC1542- Full Mortise Hinge

Stocked Product

- SQ1541 3-1/2" x 3-1/2" 2 pk. 32D
- SQ1541 4" x 4" 2 pk. 32D
- RC1541 1/4" RAD 3-1/2" x 3-1/2" 2 pk. 3, 32D
- RC1541 1/4" RAD 4" x 4" 2 pk. 3, 32D
- RC1542 5/8" RAD 3-1/2" x 3-1/2" 2 pk. 3, 32D
- RC1542 5/8" RAD 4" x 4" 2 pk. 3, 32D

Features:

5 Knuckle
Plain Bearing
Reversible
Removable Pin
Brass: ANSI A2134
Stainless Steel: ANSI A5134

Hager

RC1741/1741 - Full Mortise Residential Hinge

Stocked Product

- RC1741 3 1/2" x 3 1/2" 10A, 10B, 15,15A, 1D, 26, 26D, 2D, US3, US4, US5, 3LB, USP
- RC1741 4" x 4" 10A, 10B, 15,15A, 1D, 26, 26D, 2D, US3, US4, US5, 3LB, USP

- Most sizes stocked, boxed or bulk
- NRP stocked 4" x 4" only RC1741
- SQ 1741 boxed 3 1/2" x 3 1/2" 10B, 15, 26D, US3
- SQ1741 boxed 4" x 4 10B, 15, 26D, US3

Features:

Template Hole Pattern
Plain Bearing - Residential Weight
Non Template - 1/4" Radius Corner; Square Corner
Five Knuckle - Removable Pin
Hinge Thickness .085
Case lot 100 each
Packaging All wood
Screw Size: Wood 3/4 x 9

RC1744 - Residential Spring Hinge

FULL MORTISE TEMPLATE FOR AUTOMATIC CLOSING OF DOOR

Stocked Product

- RC1744 4" x 4" 10A, 26D, 2D, US3, L2

Case lot 80 each
Packaging All machine, 1/2 wood screws
Maximum door size - 4" x 4" 3/0 x 7/0

Features:

Template Hole Pattern
1/4" Radius 4" x 4"
Light weight for residential use only
Use with Timely style frames
All machine and 1/2" wood screws
Adjustable tension, three knuckle, adjusting tool included
Hinge Thickness .085
Screw Size: Machine 1/2 x 12-24
Wood 1-1/4 x 12

Note:

1. For maximum versatility use all spring hinges
2. Full spring tension may not be required on all hinges.

Hager

RC1748 - Full Mortise Residential Hinge

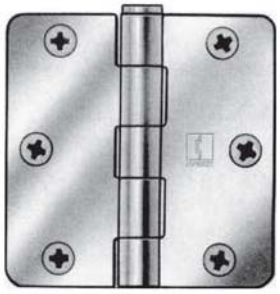

Stocked Product
- RC1748 3 1/2" x 3 1/2"
  10A, 26D, 2D, US3, L2, USP

Template Hole Pattern:

Case lot	100 each
Packaging	All machine, 1/2 wood screws #9
Box	2 Each, Sold in Boxes Pack only

Features:

For Timely Frames
Plain Bearing - Residential Weight
Template - 1/4" Radius Corner
Five Knuckle - Reversible - Removable Pin

Hinge Thickness	.085
Screw Size:	Machine 1/2 x 10-24
	Wood 1 x 9

RC1749 - Full Mortise Residential Hinge

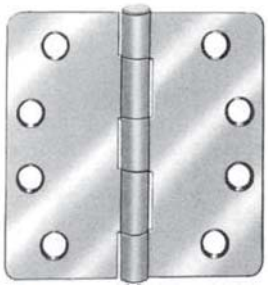

Stocked Product
- RC1749 4" x 4"
  10A, 26, 26D, 2D, US3, US5, L1, L2, LS
- RC1749 NRP 4" x 4"
  10A, 26D, US3, L2

Case lot	48 each
Packaging	All machine, 1/2 wood screws #12 head
Box	3 Each, Sold in Boxes Pack only

Features:

Template Hole Pattern
For Timely Frames
Plain Bearing - Residential Weight
Template - 1/4" Radius Corner
Five Knuckle - Removable Pin
Template Hole Pattern

Hinge Thickness	.085
Screw Size:	Machine 1/2 x 12-24
	Wood 1-1/4 x 12

RC1751, RC1752, SQ1750 - Residential Spring Hinge

Stocked Product
- RC1751 3 1/2" x 3 1/2"
  10A,10B, 26D, 2D, US3, US5, 15,15A, 1D
- RC1752 3 1/2" x 3 1/2"
  10A,10B, 26D, 26, 2D, US3, US5, 15,15A, 1D
- RC1751 4" x 4"
  10A,10B, 26D, 26, 2D, US3, US4, US5, 15,15A, 1D, US4, US5, USP
- RC1752 4" x 4"
  10A,10B, 26D, 26, 2D, US3, US5, 15,15A, 1D, US4, US5
- SQ1750 4" x 4"
  10B, 26D

Case lot	80 each
Packaging	All wood screws

Features:

Full Mortise - Non Template
RC1751 1/4" Radius
RC1752 5/8" Radius

Size	3-1/2 x 3-1/2
Hinge Thickness	.097
Screw Size:	Wood 3/4 x 9
Size	4" x 4"
Hinge Thickness	.097
Screw Size:	Wood 1 x 9

Hager

RC1841 - Full Mortise Residential Hinge

Stocked Product
- RC1841 3 1/2" x 3 1/2"
  10A,10B, 26D, 26, 2D, US3, 15,15A, 1D, US4, US5,LS, USP
- RC1841 4" x 4"
  10A,10B, 26D, 26, US3, 15,15A, 1D, US4, US5,LS, USP,3LB
- Above sizes stocked bulk, for boxed specify RC1842
- NRP option stocked RC1842 4" x 4" only

Case lot 100 each
Packaging All wood screws

Features:
Full Mortise - Non Template
Residential Weight
5/8" Radius Corner - Bulk Assembled
Steel Material with Steel Pin
5 Knuckle - Reversible
Hinge Thickness .085
Screw Size: Wood 3/4 x 9

Roton by Hager - *Continuous Hinges*

780-112 HD

Stocked Product
- 780-112 83" and 95" Clear

Features:
Individually packed
Clearance - 5/16" hinge side
Fasteners - Dril-kwick screws included
Length - Stock 83", 95"
Special order 79", 85", 119"
Door reinforcement - None up to 200 lbs, use 16 gauge channel
Frame reinforcement - None up to 200 lbs, use 16 gauge channel
Fire rating - Up to 3 hours
HD - Heavy duty

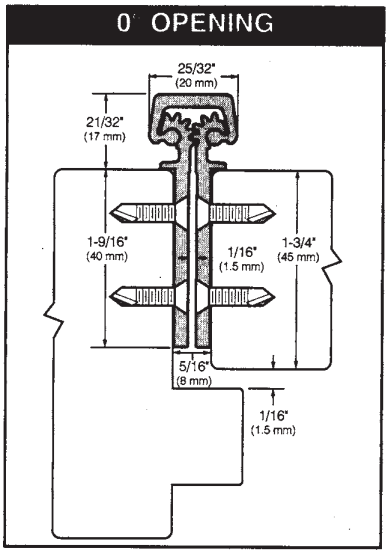

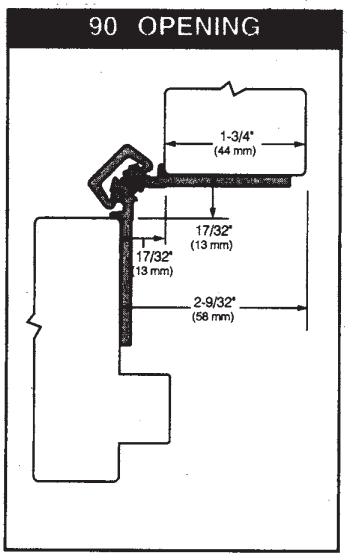

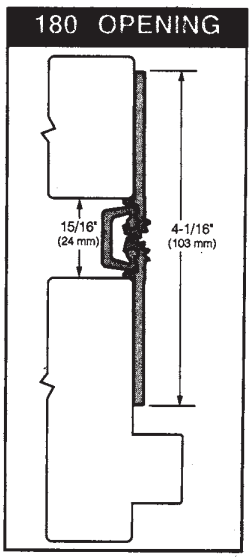

Roton by Hager - *Continuous Hinges*

780-210 HD Full Surface

Stocked Product
- 780-210HD 83” and 95” Clear, 83” Dark Bronze

Features:

Individually packed
Clearance - None required for hinge side, 1-5/8” minimum frame face required plus 3/16” rotational clearance
Fasteners - Dril-kwick screws and sexbolts included
Length - Stock 83”, 95”
Special order 79”, 85”, 119”
Door reinforcement - None required
Frame reinforcement - None required up to 200 lbs, use 16 gauge channel
Special features - Zero clearance required for hinge side. Can be used with any door and frame material
HD - Heavy duty, Fire Rated

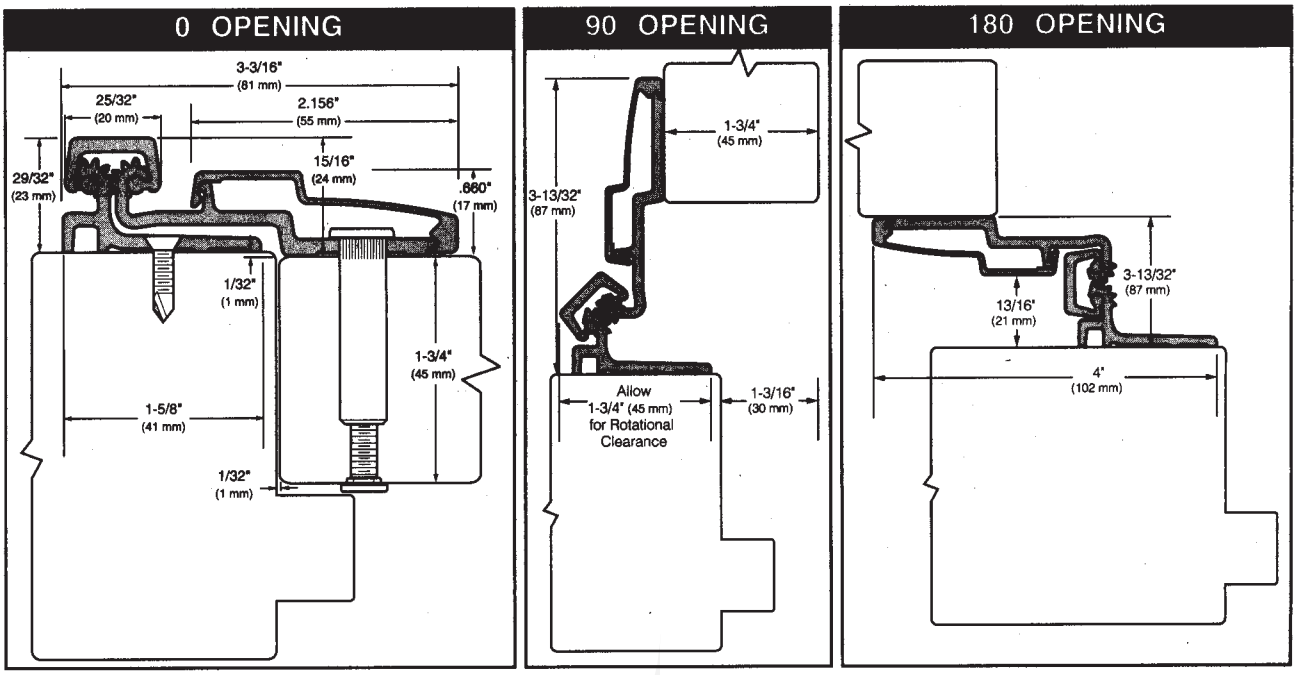

Roton by Hager - *Continuous Hinges*

780-224 HD Mortised

Stocked Product
- 780-224HD 83” and 95” Clear

Features:

Individually packed
Clearance - 5/16” hinge side
Fasteners - Dril-kwick screws included
Length - Stock 83”, 95”
Special order 79”, 85”, 119”
Door reinforcement - None up to 200 lbs, use 16 gauge channel
Frame reinforcement - None up to 200 lbs, use 16 gauge channel
Fire rating - Up to 3 hours
HD - Heavy duty

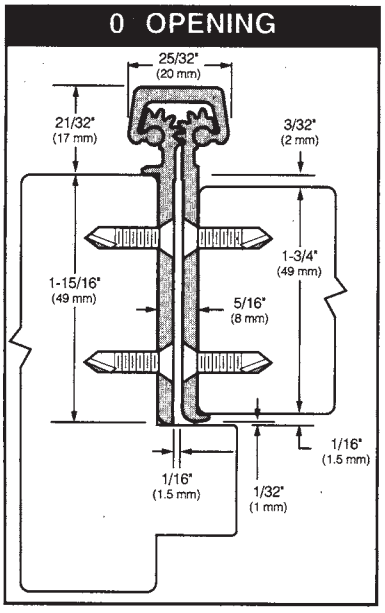

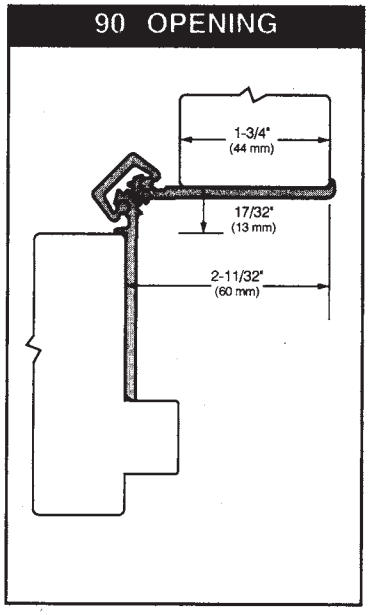

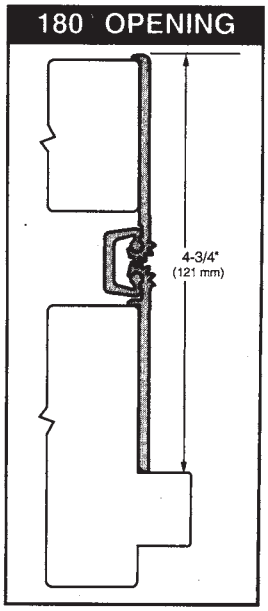

Hager - *Ecco Line*

EC1100 - Steel with Steel pin

Plain Bearing - Standard Weight
For use on medium weight doors or door requiring low frequency service

Gauge of Metal: 0.134
Hole Count: 8
Screw Size: Machine 1/2 x 12-24
Wood 1-1/4 x 12
ANSI A8133

Stocked Product
4-1/2 x 4-1/2 26D

ECBB1100 - Steel with Steel pin

Ball Bearing - Standard Weight
For use on medium weight doors or door requiring medium frequency service

Gauge of Metal: 0.134
Hole Count: 8
Screw Size: Machine 1/2 x 12-24
Wood 1-1/4 x 12
ANSI A8133

Stocked Product
4-1/2 x 4-1/2 26D

ECRCBB1100 - Steel with Steel pin

Ball Bearing - Standard Weight
For use on medium weight doors or door requiring medium frequency service
* Two ball bearings
* Non-rising removable pin with button tip and plug
* Round corner with 1/4" radius standart

Gauge of Metal: 0.129
Hole Count: 8
Screw Size: Machine 1/2 x 12-24
Wood 1-1/4 x 12
ANSI A8112

Stocked Product
4 x 4 10B, 26D

EC1105 - Steel Spring

For automatic closing of door. Meets codes for hotels, motels, institutions and commercial buildings.
* For use on 1-3/4" doors
* For maximum versatility use all spring hinges or a combination of spring and ball bearing hinges. Do not use plain bearing hinges.
* Full spring tension may not be required on all hinges
* Strong wind conditions, carpeting drag, twisted/misaligned frames, or weatherstripping on doors may require additional spring hinges

Gauge of Metal: 0.129
Hole Count: 8
Screw Size: Machine 1/2 x 12-24
Wood 1-1/4 x 12
ANSI K81071F

Stocked Product
4-1/2 x 4-1/2 26D

Hager

1756 - 200 Degree Door Viewer

Features:

- Requires 9/16” (14 mm) hole for viewer
- For doors 1-3/8” (35 mm) to 2-1/8” (54 mm) thick, adjustable
- Tamper resistant
- 90 minute fire rated
- One way viewer
- Brass
- Meets ANSI A156.16 for L03221

Stocked Product
Finishes:
US3, US10A, US15, US15A, US26

232W - Convex Wall Stop

Features:

- Meets ANSI A156.16 for L02101
- Diameter: 2-7/16” (62 mm)
- Projection: 1” (25 mm)
- Wrought brass, bronze, stainless steel with grey rubber bumper
- Fasteners: One (1) #10 x 1-1/2” PPHWS with plastic and toggle anchor

Notes:

- Specify 232T for machine screw and toggle nut screw pack (10 pk)
- BL232W is 232W case quantity 50
- Concealed tamper proof mounting
- Easy installation by inserting screwdriver through small hole in bumper

Stocked Product
Finishes:
US3, US10B, US26, US32D

236W - Concave Wall Stop

Features:

- Meets ANSI A156.16 for L02101
- Diameter: 2-7/16” (75 mm)
- Projection: 1” (25 mm)
- Wrought brass, bronze, stainless steel with grey rubber bumper
- Fasteners: One (1) #10 x 1-1/2” PPHWS with plastic and toggle anchor for drywall

Notes:

- Specify 230T for machine screw and toggle nut screw pack (10 pk) for concrete
- BL236W is 236W case quantity 50
- Easy installation by inserting screwdriver through small hole in bumper
- Concave rubber bumper prevents damage to locksets with projecting buttons
- Concealed tamper proof mounting

Stocked Product
Finishes:
US3, US10B, US26, US32D

Hager

241F - Dome Stop - Low

Features:

- Meets ANSI A156.16 for L02141
- Diameter: 1-11/16" (43 mm)
- Base Thickness: 1/8" (3 mm)
- Overall Height: 1" (25 mm)
- Cast brass with grey rubber bumper
- Fasteners: One (1) #14 x 1-1/2" FPHWS, one (1) 1/4-20 x 3/4" FPHMS, one (1) 1/4-20 lead anchor, and one (1) plastic anchor

Notes:

- To be used independently or in conjunction with 246B
- BL241F is 241F case quantity 50
- For use when no threshold is used (door not undercut)
- For use with wood or concrete floors

Stocked Product
Finishes:
US3, US10B, US26, US26D

246B - Dome Stop Riser Plate

Features:

- Diameter: 1-3/4" (45 mm)
- Base Thickness: 3/8" (10 mm)
- Cast brass
- Fasteners: One (1) 1/4-20 x 1" FPHMS

Notes:

- For use with 241F on undercut doors, doors with thresholds, and carpeted flooring

Stocked Product
Finishes:
US3, US10B, US26, US26D

250W - Convex Wall Stop

Features:

- Diameter: 1" (25 mm)
- Projection: 9/16" (14 mm)
- Cast brass
- Fasteners: One (1) #6 x 3/4" screw with anchor and one (1) .052" diameter nail

Notes:

- Concealed mounting screw prevents vandalism
- For use on drywall
- Compact design

Stocked Product
Finishes:
US3, US10B, US26

Hager

257F - Floor Stop

Features:

- Base: 1-9/16" x 2-15/32" (40 mm x 63 mm)
- Overall Height: 2" (51 mm)
- Cast Brass With Black Rubber Bumper
- Fasteners: One (1) #14 x 1-1/2" FPHWS, one (1) 1/4-20 x 3/4" FPHMS, one (1) 5/16-18 lead anchor, one (1) 1/4-20 lead anchor, one (1) plastic anchor, one (1) 5/16-18 x 2-1/2" threaded stud, and one (1) 5/16-18 x 2-1/2" combo threaded stud
- Meets ANSI A156.16 for L02131

Notes:

- 1-3/8" (35 mm) max door to floor clearance
- Heavy duty - for use in high traffic area
- For use on wood or concrete floors

Stocked Product
Finishes:
US3, US10B, US26, US26D

270D - Kick Down Door Holder

Features:

- Base: 1-19/32" x 1-25/32" (41 mm x 45 mm)
- Arm: 3-1/2" (89 mm)
- Cast Brass With Rubber Tip
- Fasteners: Three (3) #6 x 3/4" OPHWS
- Meets ANSI A156.16 for L01381

Notes:

- Provides simple hold and release with a touch of the foot
- 2-1/4" (57 mm) max door to floor clearance

Stocked Product
Finishes:
US3, US10B, US26, US26D

271D - Kick Down Door Holder

Features:

- Base: 1-19/32" x 1-25/32" (41 mm x 45 mm)
- Arm: 4-7/16" (87 mm)
- Cast Brass With Rubber Tip
- Fasteners: Three (3) #6 x 3/4" OPHWS
- Meets ANSI A156.16 for L01381

Notes:

- Provides simple hold and release with a touch of the foot
- 3-1/4" (83 mm) max door to floor clearance

Stocked Product
Finishes:
US26D

Hager

281D - Slide Flush Bolt

Features:

- Faceplate: 3/4" x 6" (19 mm x 153 mm)
- Bolt Diameter: 1/2" (13 mm)
- Strike: 7/8" x 1-3/4" (22 mm x 45 mm)
- Bolt Backset: 7/16" (11 mm)
- Bolt Throw: 1" (25 mm)
- Brass, Bronze faceplate with steel components
- Fasteners: Four (4) #6 x 3/4" FPHWS
- Meets ANSI 156.16 for L04201

Notes:

- Double action spring design provides automatic holding of bolt in projected or retracted position

Stocked Product
Finishes:
US3, US5, US10B, US15, US15A, US26D

282D - Manual Flush Bolt

Features:

- Faceplate: 1" x 6-3/4" (25 mm x 172 mm)
- Flattened Round Bolt Head: 1/2" (13 mm) square
- Bolt Throw: 3/4" (19 mm)
- Standard Rod Length: 12" (305 mm) (from center of face to corner of door)
- Bolt Backset: 3/4" (19 mm)
- Guide Plate: 1" x 2" (25 mm x 51 mm)
- Mortise strike: 15/16" x 2-1/4" (24 mm x 57 mm)
- Optional Rod Length: 18" (457 mm)
  25" (636 mm)
  30" (762 mm)
  Specify 282R
- Brass faceplate with steel components
- Fasteners: Eight (8) #8 x 3/4" combo screws, Eight (8) #8 x 1-1/2" combo screws
- Meets ANSI 156.16 for L14251

Notes:

- 3-hour fire rating for metal doors up to 4 feet wide by 10 feet tall
- 282S strike plate bag and 282P bolt head available
- For use on hollow metal/fire rated doors
- 282R optional rod length available: 18" (457 mm) , 25" (635 mm), and 30" (762 mm) (bolt head not included) - no charge
- Non-handed
- Bolt head rods are adjustable

Stocked Product
Finishes:
US3, US10B, US26D

Hager

324W - Light Duty Wall Bumper

Features:

- Diameter:1-1/4" (32 mm)
- Projection: 3-1/4" (83 mm)
- Cast Brass, Bronze With White Rubber Tip
- Tip Diameter: 5/8" (16 mm)
- Fasteners: #10 x 7/8" Wood Thread
- Meets ANSI A156.16 for L02031

Notes:

- Replaceable rubber tip available. Part # 1-269-3073
- Hex shape near the tip allows usage of a wrench for easier installation

Stocked Product
Finishes:
US3, US10B, US15, US15A, US26, US26D

30S - Square Corner - Beveled Push Plate

Features:

- Gauge: .050" (1 mm)
- Aluminum, Brass, Bronze, Stainless Steel
- Fasteners: Six (6) #6 x 5/8" OPH Tapping Screws
- Meet ANSI A156.6 for J301 push plate

Notes:

- May be ordered cut for cylinder (CFC) or engraved "PUSH"

Stocked Product
Finishes:
US3, US10B, US32D

36N - Pull Plate - Square Corner

Features:

- Gauge: 0.050" (1.3 mm)
- Aluminum, Brass, Bronze, Stainless Steel
- Fasteners: Six (6) #6 x 5/8" OPH Tapping Screws
- Meets ANSI A156.6 for J405 Pull Plate

Stocked Product
Finishes:
US3, US10B, US32D

6601 - Handrail Bracket

Features:

- Base to center of rail:2-3/4" (70 mm)
- Projection: 3-1/4" (83 mm)
- Cast aluminum
- Fasteners: - Three (3) #8 x 1-1/2" OPHWS, Two (2) #8 x 3/4" OPHWS
- Polybag (1 each) with wood screws and rail bracket

Stocked Product
Finishes:
US3, US5, US10A, US15

Head West - *Plastic Bodied Medicine Cabinets*

Model 7009 (7023 Single Pack)

Features

- 16”x26” Stainless Steel Frame Mirror of Select Glass
- A 14”x24” Rough in Size Body
- High Quality High Impact Polystyrene Plastic Body with a Smooth and clean Interior, Straight Sides, for Clean Installation
- Three Adjustable Glass Shelves for More Light In Cabinet

Stocked Product
7023 Single Pack

Model 7012

Features

- 16”x26” Beveled (1/2”) Edge Mirror
- A 14”x24” Rough in Size Body
- High Quality High Impact Polystyrene Plastic Body with a Smooth and clean Interior, Straight Sides, for Clean Installation
- Three Adjustable Glass Shelves for More Light In Cabinet

Stocked Product
7012

Model 7015

Features

- 16”x26” Polished Edge Mirror
- A 14”x24” Rough in Size Body
- High Quality High Impact Polystyrene Plastic Body with a Smooth and clean Interior, Straight Sides, for Clean Installation
- Three Adjustable Glass Shelves for More Light In Cabinet

Stocked Product
7015

Head West - *Metal Bodied Medicine Cabinets*

Model 7010

Features

- 16”x36” Stainless Steel Frame Mirror of Select Glass
- A 14”x34” Rough in Size Body
- Galvanized Steel Body with Heavy Powder Coat Finish for Lasting Rust Protection
- Three Adjustable Glass Shelves for More Light In Cabinet

Stocked Product
7010

Model 7013

Features

- 16”x36” Bevel (1/2”) Edge Mirror
- A 14”x34” Rough in Size Body
- Galvanized Steel Body with Heavy Powder Coat Finish for Lasting Rust Protection
- Three Adjustable Glass Shelves for More Light In Cabinet

Stocked Product
7013

Model 7016

Features

- 16”x36” Polished Edge Mirror
- A 14”x34” Rough in Size Body
- Galvanized Steel Body with Heavy Powder Coat Finish for Lasting Rust Protection
- Three Adjustable Glass Shelves for More Light In Cabinet

Stocked Product
7016

HES

1006 - Series Electric Strike

Features:

- Innovative dual interlocking plunger
- Stainless steel construction
- Electrical .45 amps @ 12 VDC
  .25 amps @ 24 VDC
- 3000 lb static strength
- Dual voltage, field selectable, 12 or 24 VDC
- Internally mounted solenoid fail secure
- Non handed

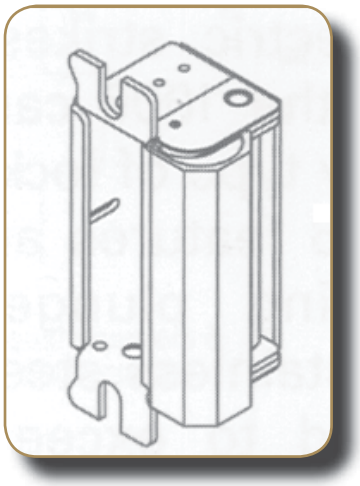

Face Plate Options:

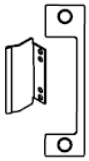

AD
For Use with mortise locksets with a normally extended 1" deadbolt without a deadlatch.
Compatible Locksets: Sargent (7700 & 8100 series), Schlage, Yale (8700)

KD
For use with Schlage, Sargent (8100), Yale mortise locks.
Mortise locksets with deadlatch positioned above the latch bolt.

ND
For use with Schlage, Sargent (8100), Yale mortise locks.
Mortise locks where the deadbolt is used for night latch function only.

J
For use with cylindrical locksets up to 3/4" throw and all locksets with center lined belts.
Compatible with Arrow, Best, Corbin, Falcon, Russwin, Sargent, Schlage, Yale

KM
For use with Best, Corbin, Falcon, Sargent (8200).
Mortise locks with a deadlatch positioned below the latch bolt.

NM
For use with Corbin, Falcon, Sargent (8200).
Mortise locksets with a deadlatch positioned below the latch bolt and where dead bolt is used for night latch function only.

J-2
For use with cylindrical locksets with up to a 3/4" throw, in wood frame applications.

TD
For use with mortise locks with a normally extended 1"deadbolt and a center-liner.
For SCH, SGT, YALE

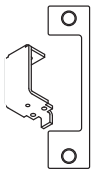

HD
For use with: Mortise locksets with a 1" deadbolt without a deadlatch. Strike will not release when deadbolt is extended. Compatible locksets: Sargent (7700 & 8100 series), Yale (8700)

Stocked Product

Item	Finish
1006 Body	630
1006 Face plate	630
1006 AD	613, 630
1006 J	630
1006 J2	613, 630
1006 KD	630
1006 KM	630
1006 HD	613,630
1006 ND	630
1006 NM	630

HES

2005 Smart / Pac III

2005 is an in-line power control that is able to receive input voltages from 12 or 24 VAC or VDC. Has a built-in bridge rectifier and provides 12 to 24 VDC output.

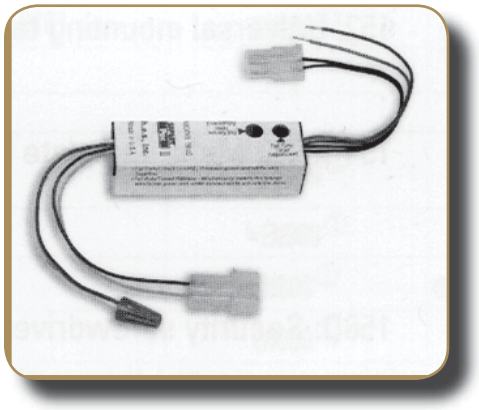

Features:

- Inline fuse
- MOV to protect against surges
- 2 to 8 second adjustable timer

4500 - Series Low Profile Fire Rated Strike

Features:

- 1-3/8” depth for installation in 2” frames with 1/2” drywall penetration
- 3000 lb static strength
- Heavy duty stainless steel construction
- 5 year limited warranty

Specifications:

- UL 10C 3 hour fire rated in fail secure mode
- BHMA 156.31 Grade 1

Stocked Product

Item	Finish
4500	630

HES

5000/5200 - Series Electric Strike

Features:

- Dual voltage 12 or 24 VDC/VAC
- Field selectable fail secure / fail safe
- Forcing strength rating 1,500 lbs
- Dynamic force rating 70ft-lbs
- Endurance rating 250,000 cycles (factory tested to over 1,000,000)
- Internally mounted solenoid
- Non-handed
- Trim enhancer (goof plate) included
- Five year warranty
- Strike Body Depth 1-1/16”

(NOTE: Shown with optional 501 Faceplate)

- In-frame horizontal adjustability
- Heavy duty - for use with up to 3/4” latchbolts
- Dual voltage 12 or 24 VDC/VAC
- Field selectable fail secure / fail safe
- Forcing strength rating 1,500 lbs
- Dynamic force rating 70ft-lbs
- Endurance rating 250,000 cycles (factory tested to over 1,000,000)
- Internally mounted solenoid
- Non-handed
- Trim enhancer (goof plate) included
- Five year warranty
- Strike Body Depth 1-3/16”

(NOTE: Shown with optional 501 Faceplate)

Stocked Product

Item	Finish
5000 and 5200	630
501 face plate	630
501A face plate	613, 630
503 face plate	613, 630

503
For use with cylindrical locksets. For use with latchbolts up to 1/2” throw. Includes universal mounting tabs. Aluminum frames.

501
Square corner, flat face plate.
For use with cylindrical locksets in ANSI metal jambs.
For use with latch bolts up to 1/2” throw

501A
Radius corner, flat face plate.
For use with cylindrical locksets. For use with latch bolts up to 1/2” throw includes universal mounting tabs. Aluminum frames

HES

Electric Strike

8000 - Series

This field selectable fail safe/fail secure unit requires no cutout on the frame for fast, easy installation. It accommodates 1/2-5/8" latchbolts (with 1/8" door gap). With patented vertical adjustability to accommodate door sag or misalignment, the 5900 sets the standard for concealed electric strikes.

(NOTE: Shown with optional 801 Faceplate)

Specifications

- ANSI/BHMA 156.31, Grade 1
- UL Pending
- Patented design

Electrical

- .24 Amps @12VDC
- .12 Amps @ 24VDC
- DC Continuous Duty/AC Intermittent Duty

Standard Features

- No cutting on frame required
- Vertical adjustability to accommodate door sag
- Tamper resistant

Stocked Product

Item	Finish
8000	630

Faceplate Options:
801 - 4-7/8" x 1-1/4" square corner
Finish: 613, 630

9500 - Series (Fire Rated)

9500 series is the fire rated version of the 9600 series. Designed for use with 3' or 4' exit devices

Specifications:

- NFPA 252, ASTM E152
- UL 10C fire rated, 90 minutes (fail secure only)
- UL305
- Warnock Hersey UBC 7-297, UBC 7-294
- Electrical .45 Amps @ 12VDC
  .25 Amps @ 24VDC
- ANSI / BHMA 156.31 Grade 1
- NFPA Specification 252

Features of both:

- Dual voltage 12/24 VDC
- Heavy duty designed for 3' or 4' exit device
- Field selectable fail secure / fail safe
- Tamper resistant - heavy duty
- Completely surface mounted
- Non handed
- Horizontal lockdown screws
- Accommodates up to a 3/4" throw pullman latch
- 5 year warranty

9600 - Series (Non Fire Rated)

Designed for use with 3' or 4' exit devices

Specifications:

- UL1034 burglary-resistant rated
- ANSI/BHMA, 156.31 Grade 1 (#E09731, #E09732)
- Patented Design

Stocked Product

Item	Finish
9500	630
9600	613, 630

Kaba Ilco – *Key Machines*

BRAVO III
Lever Operated Duplicator

Features

- Wide spacing between vise jaws accommodates new longer keys and large headed keys.
- Versatile four-position reversible vise jaws securely c residential, commercial, padlock, and automotive keys including double-sided types, without adapters.
- Carriage is spring loaded, provides consistent cutting pressure, and reduces potential for miscuts.
- Automatic cutter start feature controlled by micro-switch is activated by raising or lowering the carriage.
- Precise adjustments. A tracer point with micrometer dial regulation makes it quick and easy to adjust depth of cut; simple to replace when worn.
- Carriage release button can only be activated when the key gauges are in the down position, preventing potential cutter contact.
- Two carriage shafts ensure sensitivity and precision in the cutting movement.
- Features a “soft-touch” deburring nylon brush.

Specifations

Motor: 110V standard; 1⁄4 hp capacitor start
Vice Jaws: D507215BA

Cutter: CU50A milling cutter, flat left side, cobalt steel

Brush: D925102ZR

Dimensions: 15”W x 20” D x 10” H (38cm x 51cm x 25cm)

Weight: 47 lbs. (21.4kg)

Duplicates Cylinder and Automotive Keys

Kaba Ilco – *Key Machines*

044 HD
Lever Operated Duplicator

Features

- Super Jaw 3, “secure grip”, four-position vise jaws; securely clamps most residential, padlock or automotive keys without the need for adapters, including double-sided types.
- Permanently lubricated cutter spindle shaft ball bearings rather than bushings; bearings are usually found on more expensive models.
- Hardened carriage shaft and cutter spindle provide extended service life
- Fast spindle speed provides smoother cuts
- Titanium coated P-CU20 milling cutter; made from quality, hardened tool steel
- Wide spacing between vise jaws, accommodates longer key types.
- Dial type depth adjustment system greatly simplifies calibration and improves accuracy.
- Ideal for mobile use, efficient 1/4 hp motor will operate with most inverters and generators that supply 500 watts (continuous) or higher output (115 VAC)
- Special device guards against cutter contact with vise jaws.
- Circuit breaker protected.

Specifations

Motor: 110V standard; also 220V; all 1⁄4 HP, 1725 rpm

Vise Jaws: Super Jaw 3, four position

Brush: 814-00-51

Cutter: P-CU20 milling cutter, flat left side

Dimensions: 141⁄2”W x 16”D x 10”H (32cm x 35cm x 25cm)

Weight: 28.3 lbs. (12.84 kg)

Meets OSHA and CSA/NRTL/C* requirements
**Applies to 110 Volt model only*

Duplicates Cylinder and Automotive Keys

Kaba Ilco – *Key Machines*

045 HD

Features

- Super Jaw 3, “secure grip”, four-position vise jaws; securely clamps most residential, padlock, or automotive keys without the need for adapters, including doublesided types.
- Permanently lubricated cutter spindle shaft ball bearings rather than bushings; bearings are usually found on more expensive models.
- Hardened carriage shaft and cutter spindle provide extended service life.
- Wide spacing between vise jaws; accommodates longer key types.
- Dial type depth adjustment system greatly simplifies calibration and improves accuracy.
- Ideal for shop or mobile use; efficient 1/4 HP motor will operate with most inverters and generators that supply 500 watts (continuous) or higher output (115 Volt AC).
- Special depth limit device guards against cutter contact with vise jaws.
- Features a “soft-touch” deburring brush.
- Cutter is made of high speed tool steel, coated with titanium nitride for longer cutting life.
- Built in circuit breaker protection.

Specifations

Motor: 110V-AC standard; also 220V; all 1/4 hp, 1725 rpm

Vise Jaws: Super Jaw 3, four-position

Cutter: P-X23MC; titanium coated

Brush: 814-00-51

Dimensions: 14 1/2”W x 17 1/2” D x 8 3/4”H (36.8cm x 44.5cm x 22.2cm)

Weight: 26.1 lbs. (11.85 kg)

Meets OSHA and CSA/NRTL/C* requirements.
** Applies to 110 Volt model only*

Duplicates Cylinder and Automotive Keys

ILCO - *Replacement Cylinders*

15995 -Key-in-Knob / Deadbolt Combination Replacement Cylinders

Universal Knob / Lever Locksets Plus Arrow & Schlage Deadbolts
(Arrow Knob Designs TA,BD,DD use 1539 knob cylinder)

- 32 Available Keyways
- Arrow D, E, F, K, Schlage B100, B200, B400, H Series deadlock
- Operates most Grade 1& 2 knob cylinder locksets and levers
- CL3900 Corbin Lever and Falcon T Series with tailpieces below
- 560 and 660 Schlage Deadbolts
- Screw Cap Retainer
- US4 and 26D Finish
- Solid Brass

Stocked Keyways	Stocked Finishes
Kwikset	US4, 26D
Schlage C	US4, 26D
Schlage C-K	US4, 26D
Schlage E	US4, 26D
Sargent LA-LC	26D
Weiser	26D

Rim Cylinders

7015 - Rim Cylinders

Solid brass cylinders are ideal for use on 1-3/8" to 2-1/4" thick door.
Each cylinder is furnished with trim ring, mounting plate & break off screws.
All cylinders drilled 6 pin - 5 pin keyed.

Stocked Keyways	Stocked Finishes
KS = KWIKSET	US3, US26D
WA = WEISER	US26D
SC = SCHLAGE C	US3, US10B, US26D
SE = SCHLAGE E	US10B, US26D
SX = SCHLAGE C-K	US10B, US26D

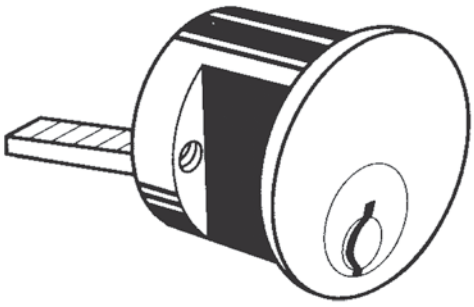

Dummy Mortise Cylinders

Stocked Products	Stocked Finishes
• Dummy Rim Part # 7010	10B, 26D
• Dummy 1-1/8" Mortise # 7180	10B, 26D
• Dummy 1-1/4" Mortise # 7200	10B, 26D

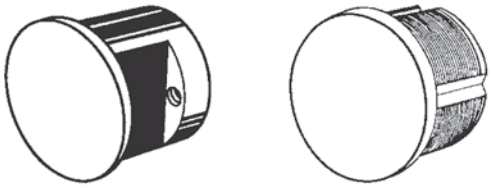

ILCO - *Replacement Cylinders*

Thumb-turn Mortise Cylinders

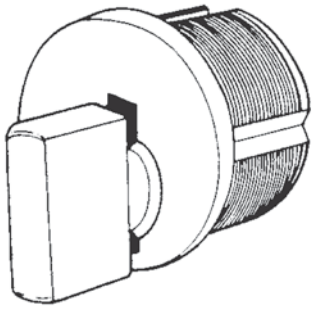

Stocked Products	Stocked Finishes
• 7181 1-1/8" Length	• 10B, 26D
• 7201 1-1/4" Length	• 26D

Mortise Cylinders

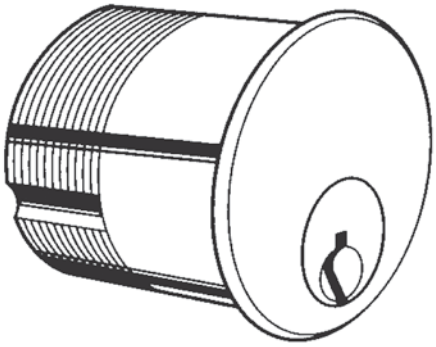

- 7165 1" Mortise Cylinder with AR cam attached
- 7185 1-1/8" Mortise Cylinder with Standard AR cam attached
- 7205 1-1/4" Mortise Cylinder with Standard cam attached

Machined from solid bar brass. This line offers a broad selection of keyways. Threadsize is 1.150" x 32 UNS.
All cylinders drilled 6 pin - 5 pin keyed with standard cam

7165 - 1" Mortise Cylinders

Stocked Keyways	Stocked Finishes
KWIKSET	10B, 26D
SCHLAGE C	10B, 26D
SCHLAGE C-K	10B, 26D
WEISER	26D

7185 - 1-1/8" Mortise Cylinders

Stocked Keyways	Stocked Finishes
SCHLAGE C	US3, 10B, 26D
SCHLAGE E	10B, 26D
SCHLAGE C-K	10B, 26D
YALE 8	26D
KWIKSET	US3, 10B, 26D

7205 - 1-1/4" Mortise Cylinders

Stocked Keyways	Stocked Finishes
SCHLAGE C	10B, 26D
SCHLAGE C-K	10B, 26D
SCHLAGE E	10B, 26D
KWIKSET	US3

ILCO

Adjustable Spring Collars

• 861A 5/16"-13/32" Adjustment, Brass Material, Satin Chrome

861A

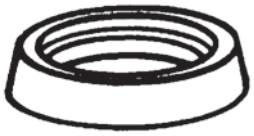

Solid Collars

- 861D 1/8" Aluminum
- 861F 1/4" Aluminum
- 861Q 3/8" Aluminum
- 861R 1/2" Aluminum

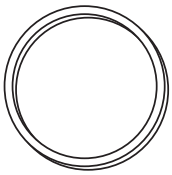

Stocked Products

861A Adjustable Spring Collar
861D Solid Collar 1/8"
861F Solid Collar 1/4"
861Q Solid Collar 3/8"
861R Solid Collar 1/2"

Stocked Finishes

26D
ALUM , DURO, US3
ALUM , DURO
ALUM , DURO,
ALUM , DURO

CAMS

• Mortise Cylinder Cam

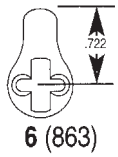

6 (863)

Standard Yale Cam

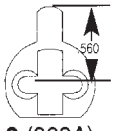

2 (863A)

Adams Rite Cam

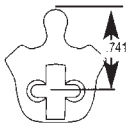

3 (863D)

LKWD/MARKS CLVRLF

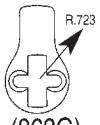

1 (863G)

Standard Cam

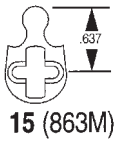

15 (863M)

Schlage L Cam

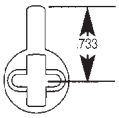

16 (863N)

Sargent/Yale

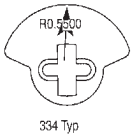

18 (863R)

Lori Deadlock

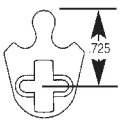

19 (863S)

CORB/RUSS CLVRLF

Stocked Cams

863	Standard Yale Cam
863A	Adams Rite Cam
863D	Lockwood/Marks Cloverleaf Cam
863G	Standard Cam
863M	Schlage Lock Cam
863N	Sargent/Yale Cam
863R	Lori Deadlock Cam
863S	Corbin/Russwin Cloverleaf Cam

Kaba Ilco – *Look Alike Key Blanks*

FALCON
1A1A1
NS

GENERAL MOTORS
GMA
NP

GENERAL MOTORS
GMB
NP

GENERAL MOTORS
GMC
NP

GENERAL MOTORS
GMD
NP

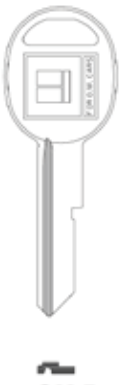

GENERAL MOTORS
GME
NP

KWIKSET/TITAN
08260KW
NS

KWIKSET/TITAN
1063KW
NP

MEDECO®
1515
NS

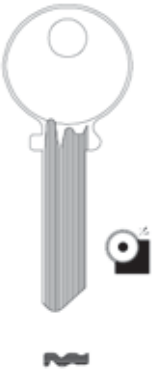

MEDECO®
1542
NS

MEDECO®
A1515
NS

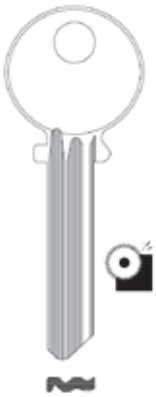

Kaba Ilco – *Look Alike Key Blanks*

SARGRNT *6275LA* NS	SCHLAGE *100C-NP* *100C-NS*	SCHLAGE *101C-NP* *101C-NS*	SCHLAGE *101E* NS
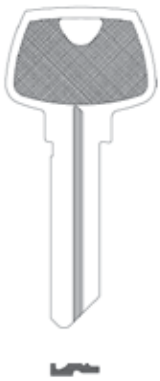			

Kaba Ilco – *Domestic*

ABUS
AB23
NP

ABUS
AB62E
NP

ADAMS RITE
IN8
BR

ALMET/ARROW
1179
NP

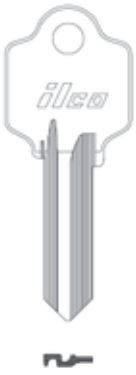

AMERICAN LOCK
AM3
BR

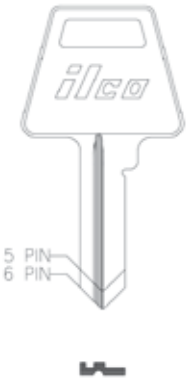

AMERICAN LOCK
A1045 6-Pin
NP

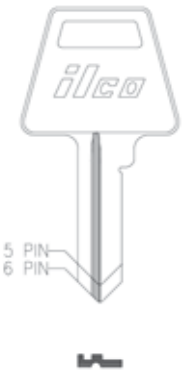

AMERICAN LOCK
1045
NP

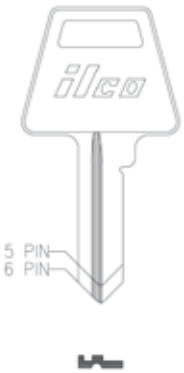

ARROW
AR1
BR

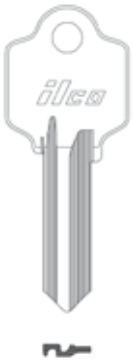

BEST
A1114A
NP

BEST
A1114B
NP

BEST
A1114C
NP

BEST
A1114D
NP

BEST
A1114DD
NP

BEST
A1114E
NP

BEST
A1114F
NP

BEST
A1114FM
NP

BEST
A1114G
NP

BEST
A1114H
NP

BEST
A1114J
NP

BEST
A1114K
NP

BEST
A1114L
NP

BEST
A1114M
NP

BEST
A1114Q
NP

BEST
A1114R
NP

BEST
A1114TB
NP

Kaba Ilco – *Domestic*

BOMMER
R1003M
NP

CCL
1000G 5-Disc
1000H 4-Disc
NP

CCL
1000V 6-Pin
NP

CESSNA
O1122A
NP

CHICAGO
100AM 6-DISC
NP

CHICAGO
101AM 6-DISC
NP

CHICAGO
102AM 6-DISC
NP

CHICAGO
103AM 6-DISC
NP

CHICAGO
104AM 6-DISC
NP

CHICAGO
1041G
NP

CHICAGO
1041H
NP

CHICAGO
1041T
NP

CHICAGO
1041Y
NP

Kaba Ilco – *Domestic*

CHICAGO
1137B / 1137S
ST

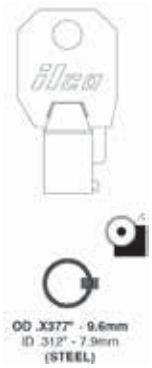

CHICAGO
CG1
BR

CHICAGO
CG16
BR

CHICAGO
S1041JA
NP

CORBIN
1000 5-Pin
1000AB 6-Pin
NP

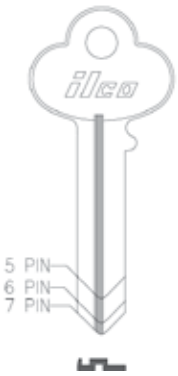

CORBIN
1001EB 5-Pin
NP

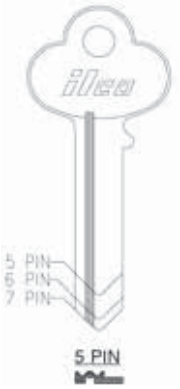

CORBIN
1001EG 6-Pin
NP

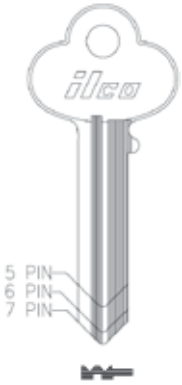

DEXTER / MASTER
D1098B
NP

DEXTER / MASTER
DE6
DE6-250
BR

DIEBOLD
1028
NS

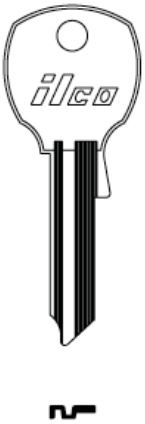

Kaba Ilco – *Domestic*

ESP
1502
NP

ESP
1502M
NP

ESP
1531
NP

FALCON
1045WC 5-Pin
NP

FALCON
A1054WC 6-Pin
NP

FALCON
A1054WD 6-Pin
NP

FORT
L1054G 6-Pin
NP

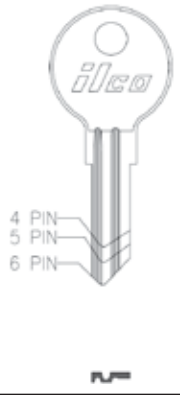

HAYWORTH
1597
NP

HAYWORTH
1598
NP

HAYWORTH
1599
NP

Kaba Ilco – *Domestic*

HUDSON
1003M 5-Pin
NP

HUDSON, NCL
1069
NP

HUDSON, NCL
1069B
NP

HUDSON, NCL
1069G
NP

HUDSON, NCL
1069H
NP

HUDSON, NCL
1069L
NP

HUDSON, NCL
1069LA
NP

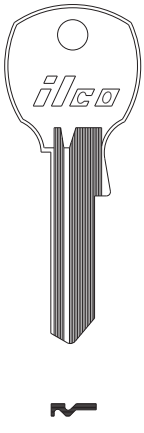

HUDSON, NCL
1069LB
NP

HUDSON, NCL
1069M 6-Disc
NP

HUDSON, NCL
1069N
NP

HUDSON
CO106
BR

HUDSON
S1000V
NP

Kaba Ilco – *Domestic*

HURD
O1122B
NP

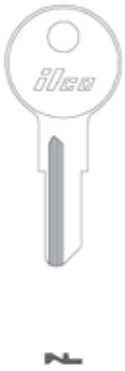

ILCO
1054
NP

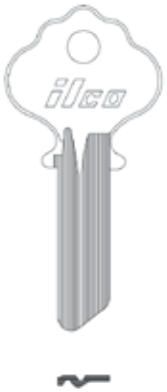

ILCO
10545G 5-Pin
NP

ILCO
1054UN
NP

ILCO
1335S
.060T x .375”W
NS

ILCO
K1054B
NP

ILCO
L1054B
NP

ILLINOIS
1043B
NP

ILLINOIS
1043J
NP

KIMBALL
1649
BR

Kaba Ilco – *Domestic*

KWIKSET
A1176
NP

KWIKSET
A1176KT
NP

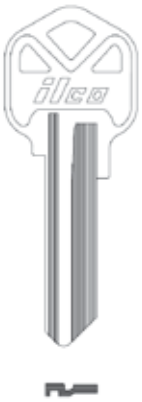

TITAN / KWIKSET
A1176ST
NP

KWIKSET
1176
NP

KWIKSET
KW1-BR
KW1-BR-250
KW1-NP
KW1-NP-250

KWIKSET
KW10-BR-250
NP

MASTER
M1-250
BR

MASTER
M1
BR

MASTER
MD1054K
NP

Kaba Ilco – *Domestic*

MASTER PADLOCK
1092
NP

MASTER PADLOCK
1092-6000
NP

MASTER PADLOCK
1092-900
NP

MASTER PADLOCK
1092C
NP

MASTER PADLOCK
1092D
NP

MASTER PADLOCK
1092DS
NP

MASTER PADLOCK
1092N
NP

MASTER PADLOCK
1092R
NP

MASTER PADLOCK
1092V
NP

MASTER PADLOCK
1092VM
NP

MOSLER
1323
.060”T x .380”W

Kaba Ilco – *Domestic*

NCL / NATIONAL CABINET

N1069B
NP

NA12
BR

NA14
BR

R1069L
NP

RO3
BR

S&G *1063B*
NS

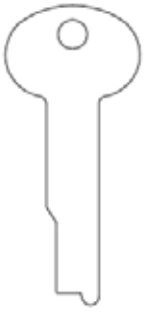

.070" - 1.8mm
.375" - 9.5mm

S&G *1063E*
NS

.070" - 1.8mm
.320" - 8.1mm

SARGENT *N1007RMA*
NS

SCHLAGE *1145A* 6-Pin
NP

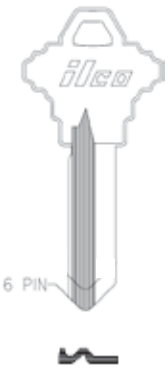

SCHLAGE *1145-HNNS*
AVAILABLE:

“Do not Duplicate”
specify 1145HNNSDND

“Plain both Sides”
specify 1145HNNSPLAIN

SCHLAGE *A1145L* 6-Pin
NP

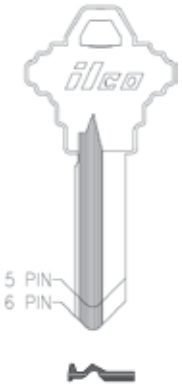

Kaba Ilco – *Domestic*

SCHLAGE
DND-KW1
BR

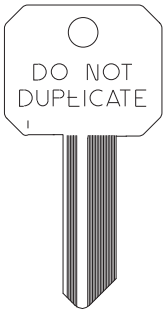

SCHLAGE
DND-RU46
BR

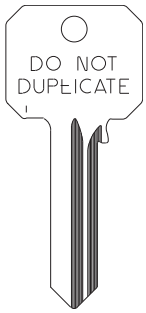

SCHLAGE
DND-SC1
BR

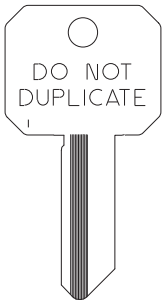

SCHLAGE
DND-SC4
BR

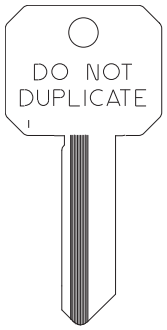

SCHLAGE
DND-SC8
BR

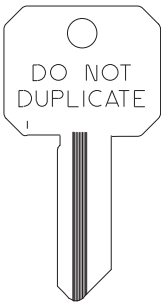

SCHLAGE
DND-SC9
BR

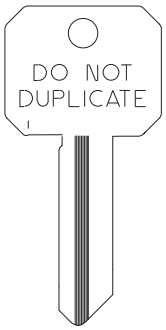

SCHLAGE
DND-WR3
BR

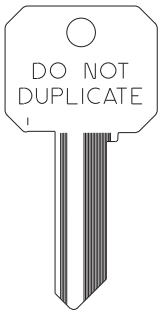

SCHLAGE
DND-Y1
BR

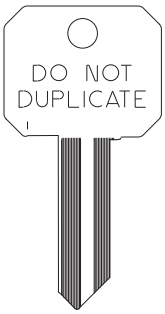

SCHLAGE
SC1-BR
SC1-BR-250
SCI-NP
SCI-NP-250

SCHLAGE
SC4-BR
SC4-NP
SC4-BR-250

SCHLAGE
SC8
BR

SCHLAGE
SC9
BR

Kaba Ilco – *Domestic*

SEGAL
1022 5-Pin
NP

SENTRY SAFES
1626
NP

TOOL BOX
1527
NP

TOOL BOX
1605
NP

USPS MAILBOX
1646
NP

USPS MAILBOX
1646R
BR

WEISER
WR5
WR5-250
BR

WESLOCK
WK2
WK2-250
BR

XL LOCK
1180S
NP

XL LOCK
XL7
BR

Kaba Ilco – *Domestic*

YALE
997X
NP

YALE
998GA 6-Pin
NP

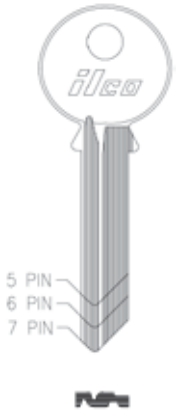

YALE
999 5-Pin
NP

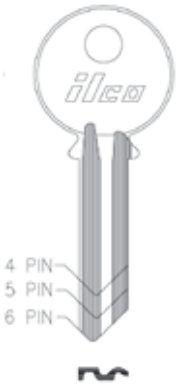

YALE
999A 6-Pin
NP

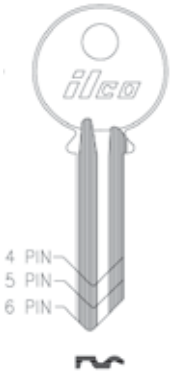

YALE
O1122
NP

YALE
O1122AR
NP

YALE
O1122BE
NP

YALE
O1122BER
NP

YALE
O1122R
NP

YALE
Y1
Y1-250
BR

YALE
Y11
Y11-250
BR

YALE
Y12
BR

YALE
Y13
BR

YALE
Y14
BR

Kaba Ilco – *Auto Electronic Key System*

Ilco®Philips Electronic Cloneable Key System
EH3P

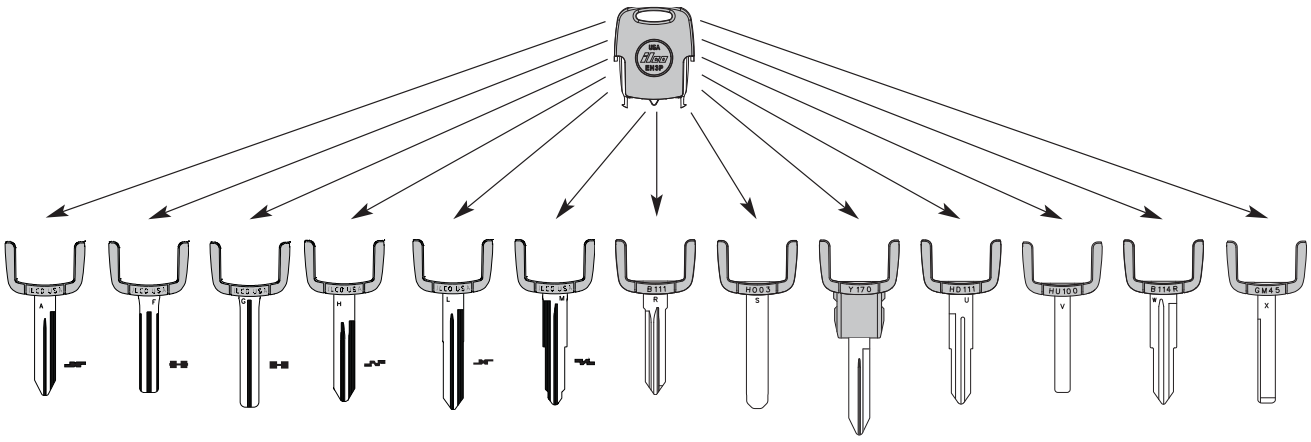

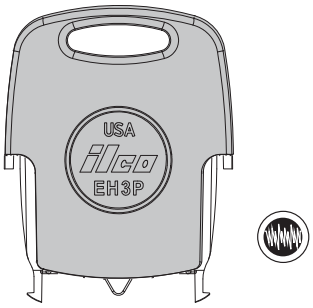

EH3P Electronic Key Head

1/Bag, 5/Box

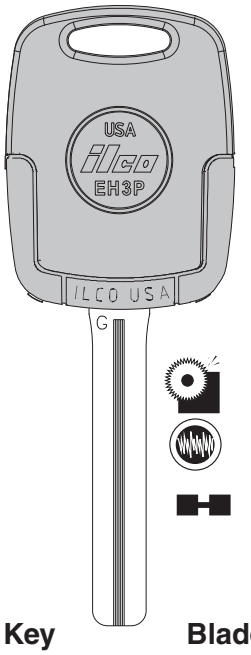

Stocked Products

AY160	Chrysler Electronic Key Blade
BH72	Ford Electronic Key Blade
CH73	Ford Electronic Key Blade
DH84	Ford Electronic Key Blade
ETOY	43 Toyota Electronic Key Blade
FTOY	48 Toyota Electronic Key Blade
GTOY	40 Toyota Electronic Key Blade
HNI02	Nissan Electronic Key Blade
JMAZ24	Mazda Electronic Key Blade
KMIT8	Mitsubishi Electronic Key Blade
LMIT9	Mitsubishi Electronic Key Blade
MMIT14	Mitsubishi Electronic Key Blade

Complete Key	Blade Only
EK3P-KK9	**EB3-G-TOY40**
1/Bag, 5/Box	1/Bag, 5/Box

Application:

KIA	Amanti	2007-2009
	Borrego	2009-2010
	Sorento	2010-2011

Kaba Ilco – *Auto Transponder*

RW4 PLUS

RW4 PLUS detects, reads, generates, archives and clones many transponder keys and electronic cloneable keys.

B111-PT

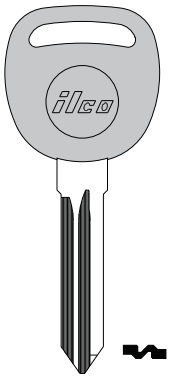

Applications for B111-PT:

Buick		Silverado -	
Lucerne CX, CXL	2006-07	Classic SS	2007
Cadillac		Silverado - 1500	2007
DTS (replaces	2006-07	Suburban	2007
Escalade	2007	Tahoe	2007
Escalade, ESV, EXT	2007	**GMC**	
SRX	2004-07	Acadia	2007
STS, STS V	2005-06	Sierra, Yukon	2007
XLR	2004-07	**Pontiac**	
Chevrolet		G5	2007
Cobalt	2006-07	G6	2005-07
Impala	2006-07	Solstice	2006-07
Monte Carlo	2006-07	Torrent	2007
Malibu/Malibu Max	2004-07	**Saturn**	
Avalanche	2007	Aura	2007
Equinox	2007	Outlook	2007
HHR	2006-07	Sky	2007

FORD *H72-PT*

CLEAR

FORD *H73-PT*

NP

FORD *H74-PT*

BR

FORD *H86-PT*

BR

Kaba Ilco – *Auto Transponder*

MITSUBISHI
MIT8-PT
NP

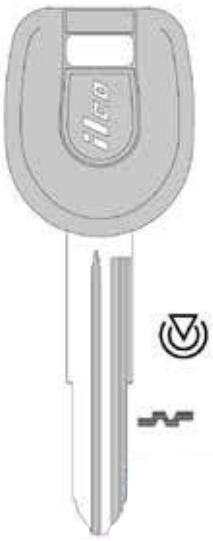

MITSUBISHI
MIT9-PT
NP

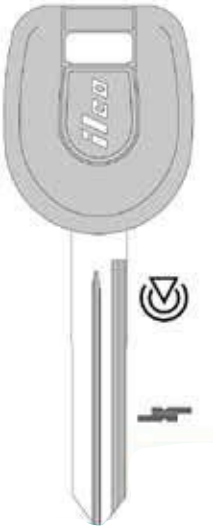

NISSAN
NIO2T
NS

NISSAN
NIO4T
NS

TOYOTA
TOY43AT4
NP

TOYOTA
TOY48BT4
BR

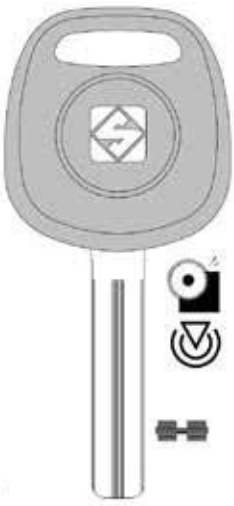

Kaba Ilco – *Auto*

AMERICAN MOTORS /JEEP/RENAULT

RA4

NP

BRIGGS & STRATTON / STRATTEC

1098M

NP

CHRYSLER

MIT1

NS

P1794

NP

Y154

NP

Y157-P

NP

Y157

NP

Y159

NP

Y159-P

NP

FORD

H50

NP

H75

NP

H75-P

NP

FREIGHTLINER

1588

NP

Kaba Ilco – *Auto*

GAS CAP LOCK / HITCHLOCK

1098GX
NS

1611
NP

1617
NP

1611R
NP

GENERAL MOTORS

B11O
NP

B110P
NP

B86
NP

B86-P
NP

B89
NP

B89-P
NP

B91
NP

B92
NP

B102
NP

B102-P
NP

B110
NP

S1098H
NP

Kaba Ilco – *Auto*

HONDA (AUTOMOBILES)

B65
NP

HD103
NS

HD103-P
NP

HONDA (MOTORCYCLES)

HD109
NP

HD74
NP

HD75
NP

HYUNDAI

HY12
NP

HY14
NP

KAWASAKI

KA14
NP

KW14
KW14-R
NP

KW15-BP
NP

KW16CP-SI
ST

KENWORTH

K1994
NP

MAZDA

H54
NP 250

MITSUBISHI

MIT1-NP
MIT1-NS

NISSAN

DA25
NP

NISSAN

DA34
NP

OPEL

YS2
NP

Kaba Ilco – *Auto*

SATURN

B96
NP

B106-P
NS

SUBARU

DA25
NP

DA31
NP

SUB1
NP

SUZUKI AUTOMOBILES

SUZ18
NP

TITAN / KWIKSET TRIMARK

1601
NP

1602
NP

1603
NP

1604
NP

TOYOTA

TR33
NP

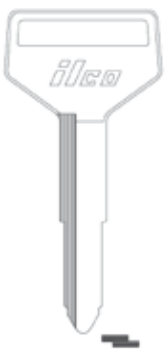

TR37
NP

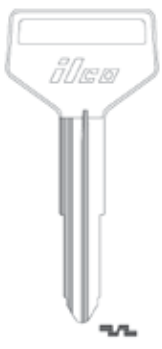

TR39
NP

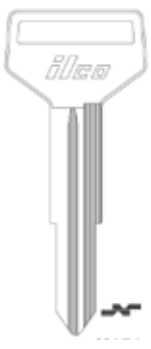

TR40
NP

TR40-P
NP

TR47
NP

TR47-P
NP

Kaba Ilco – *Auto*

TRIMARK

1621
NS

1622
NP

1623
NP

VOLKSWAGEN

X132
NP

YAMAHA

YM63
NP

Ives – *Residential*

07 WINDOW LOCKS

- Material Brass or Aluminum
- Vertical and horizontal cam action for snug non rattling fit
- Heavy gauge spring for long wearing action
- Meets ANSI A156.16
- Include screws

Stocked Product

07A3	Bright Brass
07A92	Aluminum
07MB	605, 619, 625, 626

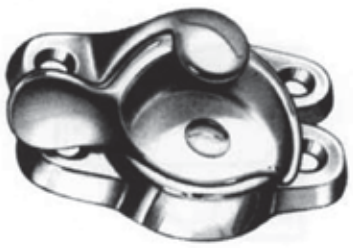

Base 15/16" x 2-5/8"
Strike 5/8" x 2-5/8"

2 ELBOW CATCH

Plate 1-3/8" X 5/8"
Strike 1-3/16" X 5/8"
Material Brass or Aluminum

Stocked Product

2A3	Bright Brass
2A92	Aluminum

25 SCREEN DOOR PULL

CTC 4-1/8"
Material Aluminum
Overall length 4-7/8"
Projection 1-5/32"

Stocked Product

25A92	Aluminum

026 BAR WINDOW LIFT

Base 1-1/8" x 4"
Material Aluminum

Stocked Product

026A3	Bright Brass

Ives – *Residential*

42 POCKET DOOR BOLT

Plate size 3-1/16" x 1-1/8"
Mortise depth 5/8"
Material Solid brass

Stocked Product
Finishes: 605,613, 625, 626

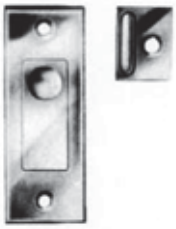

S48 MORTISE BOLT

Backset 1-3/4"
Throw 1/2"
Material Solid brass

Stocked Product
Finishes: 605

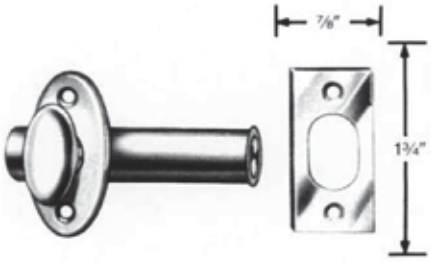

059 HAND RAIL BRACKET

Base 2-1/4" (H) x 1-3/8" (W)
Base to center of rail 2-7/16"
Material Solid brass or aluminum

Stocked Product

059A14	Bright Nickel
059A3	Bright Brass
059A5	Satin Brass Blackened
059A92	Aluminum
059B	Solid Brass Satin Nickel

59 HAND RAIL BRACKET

Base 2-13/16" (H) x 1-1/2" (W)
Base to center of rail 2-3/4"
Material Solid brass or aluminum

Stocked Product

59A3	Bright Brass
59A5	Satin Brass Blackened
59A92	Aluminum

Ives – *Residential*

060 FLEXIBLE DOOR STOP

Projection 3”
Material Steel

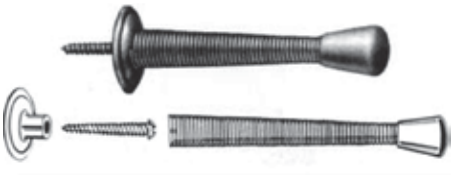

Stocked Product

060 F14	Bright Nickel
060 F3	Bright Brass
060 F5	Satin Brass Blackened
060 F10B	Duro

60 DOOR STOP

Projection 3-3/4”
Material Solid brass or aluminum

Stocked Product

60A3	Bright Brass
60A92	Aluminum
60MB	605, 609, 613, 619, 625, 626

061 FLEXIBLE DOOR STOP

Projection 4”
Material Steel

Stocked Product

061 F14	Bright Nickel
061 F3	Bright Brass

61 DOOR STOP

Projection 3”
Material Solid brass (SB), aluminum (M), or steel material

Stocked Product

61A92	Aluminum
61A3	Bright Brass
61A14	Bright Nickel
61A10B	Oil Rubbed Bronze
61MB	619, 625, 626

Ives – *Residential*

69 HINGE PIN DOOR STOP

Door opening adjustments 70° to 100° Material Steel

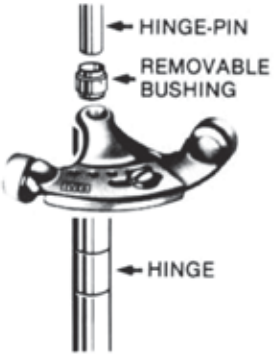

Stocked Product

69F10B	Oil Rubbed Bronze
69F14	Bright Nickel
69F15	Satin Nickel
69F3	Bright Brass
69F5	Satin Brass Blackened

70 HINGE PIN DOOR STOP

Door opening adjustments 85° to 125°
Material Brass (B) or aluminum (A)

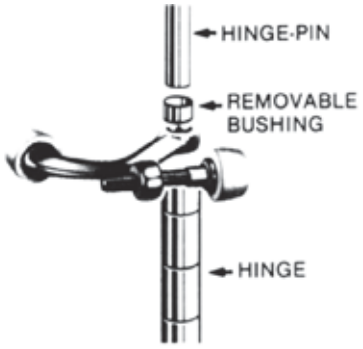

Stocked Product

70A14	Bright Nickel
70A5	Satin Brass Blackened
70A3	Bright Brass
70A92	Aluminum
70B	619, 605

221 FLUSH PULL

Bore	2-1/8”
Overall Diameter	2-7/16”
Material	Solid brass

Stocked Product

221B: 605, 609, 613, 619, 625, 626

Ives – *Residential*

223 FLUSH PULL

Size	3-9/16" x 1-5/16" x 1/2"
Material	Solid brass

Stocked Product
223B: 619, 626

227 FLUSH PULL

Overall size	3-5/8" x 1-3/4" x 9/16"
Material	Solid brass

Stocked Product
227B: 613, 626

261 Flush Bolt

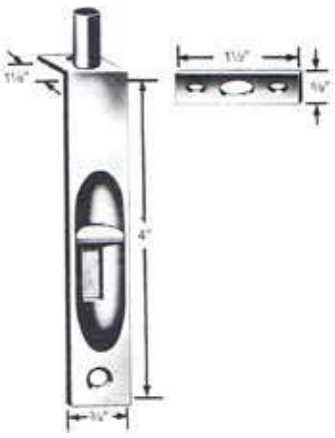

- Polished cast brass.
- A compact flush bolt of high quality incorporating most of the features of the superb No. 262 Flush Bolt.
- Deep cup provides good finger hold, allows easy operation.
- Brass bolt automatically held in retracted or projected position by unique spring design.
- Features sharp, crisp lines and superior finish.
- Packed with screws for bolt and strike.

P/N	261
Rod Backset	15/32"
Dia. of Bolt Head	5/16"
Throw	3/4"

Stocked Product
605, 613, 619, 620

Ives – *Residential*

335 Heavy Duty Roller Catch

Face plate	2-1/4" x 7/8"
Bore	3/4" x 1-3/4"
Strike	2-1/4" x 1-5/8"
Material	Solid brass or steel

Stocked Product

335B	605, 613, 619, 625, 626

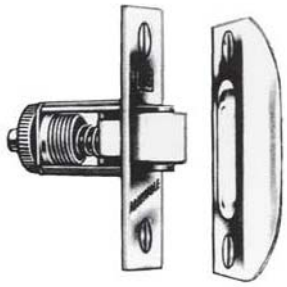

336 Heavy Duty Roller Catch

P/N	336
Face Plate	2-1/4" x 7/8"
Bore	3/4" x 1-3/4"
Strike	2-1/4" x 7/8"
Lip	1-1/8" to Center

Stocked Product

605, 613, 619, 626

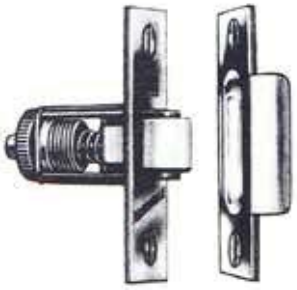

345 Adjustable Ball Catch

P/N	345
Face Plate	1-1/2" x 3/4"
Bore	9/16" x 7/8"
Strike	1-1/2" x 25/32"
Lip	13/32" to Center

Stocked Product

605, 613, 619

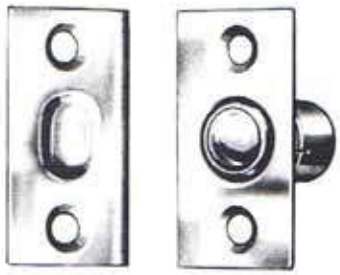

Ives – *Residential*

347 BALL CATCH

Face plate 2-1/8" x 1"
Bore 7/8" x 1-1/4"
Strike 2-1/8" x 1-3/8"
Material Solid brass

Stocked Product

347B	605, 609, 613, 619, 625, 626

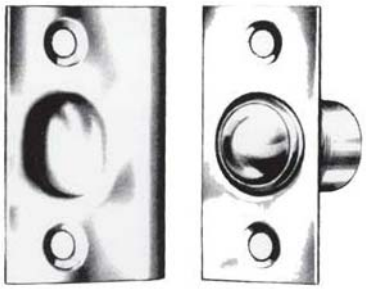

348 / 349 BALL CATCH

348 Face Plate 2-1/8" X 1"
Bore 7/8" X 1-1/4"
Strike 2-1/8" X 1-1/16"
Lip 9/16" to Center

349 Face Plate 2-1/8" X1"
Bore 7/8" X 1-1/4"
Strike 2-1/8" X 1-3/8"
Lip 7/8" to Center

Stocked Product

348B	626
349B	605, 613, 619, 625, 626

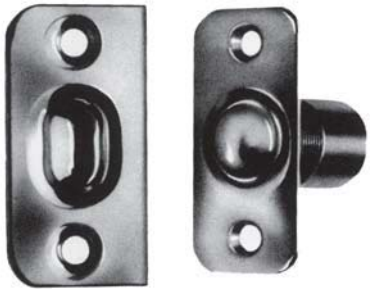

571 COAT & HAT HOOK

Projection 3"
Base 1-3/4" (H) x 1-7/32" (W)
Material Aluminum

Stocked Product

A3	Bright Brass

581 WARDROBE HOOK

Projection 1-11/16"
Base 1-1/8" (H) x 1-1/8" (W)
Material Brass or aluminium

Stocked Product

581A92	Aluminum
581MB	605, 613, 619, 626

Ives – *Residential*

698 DOOR VIEWER / *U698* UL

190° for 1-3/8" - 2-1/8" door
9/16" hole size

Stocked Product

698	605, 626
U698	605, 626

990 PASSAGE

- Solid brass body
- Fits door 1-3/8" to 1-1/2"
- Pre-assembled for doors opening left to right. Plates are reversible for opening left to right
- Solid brass strike plate
- Decorative coined edges

Stocked Product
605, 613, 619, 625

991 PRIVACY

- Solid brass body
- Fits door 1-3/8" to 1-1/2"
- Pre-assembled for doors opening left to right.
- Solid brass strike plate and turn knob
- Decorative coined edges

Stocked Product
605, 613, 619, 625

Ives – *Commercial*

Architectural Door Trim

8200 SERIES PUSH PLATE

- Made from the finest architectural aluminum, brass, and stainless steel.
- All aluminum, brass, and stainless steel Push Plates meet ANSI A156.6 requirements for .050" thickness.
- Each Push Plate is packaged individually wrapped with mounting screws.

8200 Push Plate

Stocked Product
Finishes: 10B, 32D
Size: 4" x 16"
Contact our sales department for availability of other finishes and sizes.

8300 PULL PLATES

- Made from the finest architectural aluminum, brass and stainless steel.
- All aluminum, brass, and stainless steel Pull Plates meet ANSI A156.6 reqUirements for .050" thickness.
- Each Pull Plate is packaged individually wrapped with mounting screws.

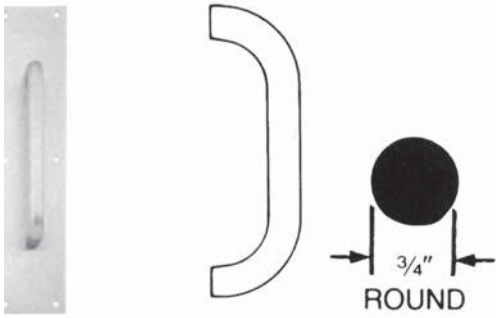

8302 Pull Plate 6" C to C
8302 Pull Plate 8" C to C

Stocked Product
Finishes: 10B, 32D
Size: 4" x 16"
6" Pull Center to Center, 8" Pull Center to Center

Ives – *Commercial*

Series 8400 DOOR PROTECTION PLATES .050"Thickness (Commercial Kick plates)

Features:

- Door Protection Plates are fabricated from the finest architectural brass, and stainless steel.
- All aluminum, brass, bronze and stainless steel Door Protection Plates meet ANSI A156.6 requirements for .050" thickness.
- Optional Beveling-For beveling of top and two sides of plates suffix with B3E, and for beveling of four sides suffix with B4E, Special order only

- Each plate is packaged carefully wrapped in strong kraft paper with #6 x 5/8" oval head, undercut sheet metal screws plated to match, for easy installation on hollow metal, laminate, or wood doors. All plates are packaged in heavy duty corrugated cardboard.

Kick Plates

- Protect the bottom of the push side of doors subject to scuffing from foot traffic.
- Recommended for all doors subject to normal use (especially doors using a closer).

Stocked Product

8" x 34", 10" x 34", 12" x 34"	10B, 32D
6" x 34"	10B

Ives – *Commercial*

Full Mortise Hinges - 3 Knuckle

3PB1 Steel with steel pin.
3PB1 Stainless Steel with stainless steel pin. (630 finish only)

PLAIN BEARING • LOW FREQUENCY • STANDARD WEIGHT
For use on Medium Weight Doors with Low Frequency Usage, not intended for use with door closing devices

- Hinges tested to ANSI - A156.1.
- Dimensions &tolerances conform to ANSI - A156.7.
- 3PB1 Steel Description conforms to ANSI - A8133.
- 3PB1 Stainless Description conforms to ANSI - A5133.
- Packed with wood and machine screws.

Size (Inches)	Size (MM)	Gauge
4.5 x4.5	114x114	.134

Stocked Finishes
26D, 32D, USP
4 1/2" x 4 1/2" size only

3CB1 Steel with steel pin.
3CB1 Stainless Steel with Stainless Steel pin. (630 finish only)
Non- Removable Pin suffix "NRP"

CONCEALED BEARING • MEDIUM FREQUENCY • STANDARD WEIGHT
For use on Medium Weight Doors with Medium Low Frequency Usage

- Hinges tested to ANSI - A156.1.
- Dimensions &tolerances conform to ANSI - A156.7.
- 3CB1 Steel description conforms to ANSI - A8112.
- 3CB1 Stainless description conforms to ANSI - A5112.
- Packed with wood and machine screws.

Size (Inches)	Size (MM)	Gauge
4.5 x4.5	114x114	.134

Special order
- Contact sales department for other sizes & finishes.

Stocked Finishes
26D, 32D, USP
4 1/2" x 4 1/2" size only
Also stocked NRP

Ives – *Commercial*

Full Mortise Hinges - 3 Knuckle

5PB1 Steel with steel pin
5PB1 Stainless Steel with stainless steel pin (630 finish)
Non-Removable Pin Suffix "NRP"

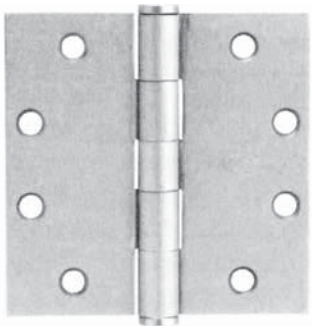

PLAIN BEARING • LOW FREQUENCY • STANDARD WEIGHT
For use on Medium Weight Doors with Low Frequency Usage, not intended for use with door closing devices.

- Hinges tested to ANSI - A156.1.
- Dimensions &tolerances conform to ANSI - A156.7.
- Packed with wood and machine screws.

Size (Inches)	Size (MM)	Gauge
4.5 x 4.5	114 x 114	.134

Stocked Finishes
26D, 32D, USP
4 1/2" x 4 1/2" size only
Also stocked NRP

5BB1 Steel with steel pin
5BB1 Stainless Steel with stainless steel pin (630 finish only)
Non-Removable Pin suffix "NRP"

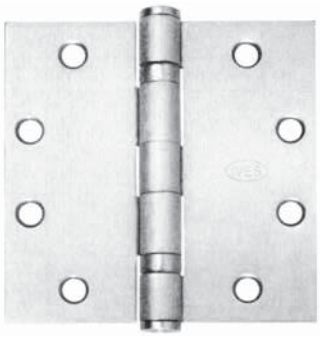

2 BALL BEARING • MEDIUM FREQUENCY • STANDARD WEIGHT
For use on Standard Weight Doors with Medium Frequency Usage

- Hinges tested to ANSI - A156.1.
- Dimensions &tolerances conform to ANSI - A156.7.
- 5BB1 Steel description conforms to ANSI - A8112.
- 5BB1 Stainless description conforms to ANSI - A5112.
- Packed with wood and machine screws.

Size (Inches)	Size (MM)	Gauge
4.5 x 4.5	114 x 114	.134
4.5 x 4	114x102	.134
5 x 4 1/5	127 x 114	.134

Stocked Finishes

4 -1/2" x 4"	USP, 26D, 32D
4 1/2" x 4 1/2"	USP, 26D, 32D
4 1/2" x 4 1/2" NRP	USP, 26D, 32D
5" x 4-1/2"	26D, 32D

Ives – *Commercial*

Full Mortise Hinges - 5 Knuckle

5BB1HW Steel with steel pin
5BB1HW Stainless Steel with stainless steel pin (630 finish only)
Non-Removable Pin suffix "NRP" strike

4 BALL BEARING • HIGH FREQUENCY • HEAVY WEIGHT
For use on Heavy Weight Doors or High Frequency Usage

- Hinges tested to ANSI - A156.1.
- Dimensions & tolerances conform to ANSI- A156.7.
- 5BB1 HW Steel description conforms to ANSI - A8111.
- 5BB1 HW Stainless description conforms to ANSI - A5111.
- Packed with wood and machine screws.

Size (Inches)	Size (MM)	Gauge
4.5 x 4.5	114 x 114	.180

Stocked Finishes
26D, 32D, USP
4 1/2" x 4 1/2" size only
Also stocked NRP

Ives – *Commercial*

FB358 (old number FB6W)

MANUAL FLUSH BOLT WOOD

Dimensions:
Body Size: 1" x 6-3/4" x 1-3/8" Deep
Guide Size: 1" x 2-1/2" x 5/64" Thick
Strike Size: 15/16" x 2-1/4" x 5/64" Thick

Stocked Product
10B, 26D

Top or bottom bolts

- UL Listed 90 minutes on 8'0" x 10'0" opening
- Non-handed.
- Bolts have 3/4" throw with a 7/8" vertical adjustment.
- Meets ANSI/BHMA A156.16, L04261.

FB458 (old number FB6)

MANUAL FLUSH BOLT METAL

Dimensions:
Body Size: 1" x 6-3/4" x 1-13/8" Deep
Guide Size: 1" x 2" x 5/64" Thick
Strike Size: 15/16" x 2-1/4" x 5/64" Thick
Rod: 1/4-20 threaded rod

Stocked Product
10B, 15, 26D, US3

Top or bottom bolts

- FB458 UL Listed fire doors up to 3 hours
- Bolt tip is 1/2" diameter
- Bolts have 3/4" throw with a bolt backset of 3/4"
- Standard rod length is 12"
- Meets ANSI/BHMA A156.6, L04251.

DP2 - Dust proof strike

Face plate 1-5/8" x 3-1/2' x 1/8" Thick

Stocked Product
10B, 26, 26D, US3

Ives – *Commercial*

FLUSH BOLT

AUTOMATIC FOR METAL *FB31P* PAIR

Top and bottom bolts
Both bolts are non-handed, but are not identical. The top bolt has no spring tension, resulting in lower actuation force with a smoother operation.

Dimensions:
Body Size: 1" x 6-3/4" x 2" Deep
Guide Size: 1" x 1-27/32" x 27/32" x 3/32" Thick
Strike Size: 15/16" x 2-1/4" x 1/16" Thick
Rub Plate Size: 1-1/4" x 1-11/16" 3/64" Thick
Auxiliary Fire Latch Size: 1" x 1-3/4" x 3-1/4 Deep

Stocked Product
10B, 32D

AUTOMATIC FOR WOOD *FB41P* PAIR

Top and bottom bolts
Both bolts are non-handed, but are not identical. The top bolt has no spring tension, resulting in lower actuation force with a smoother operation.

Dimensions:
Body Size: 1" x 8-1/2" x 2" Deep
Guide Size: 1" x 6" x 1/8" Thick
Strike Size: 15/16" x 2-1/4" x 1/16" Thick
Rub Plate Size: 1-1/4" x 1-11/16" 3/64" Thick
Auxiliary Fire Latch Size: 1" x 1-3/4" x 3-1/4 Deep

Stocked Product
10B, 32D

CONSTANT LATCH FLUSH BOLTS *FB51P* PAIR

Top and bottom bolts
FB51P combines FB51T constant latching top bolt with FB31B automatic bottom bolt. Non-handed.

Dimensions:
Body Size: 1" x 6-3/4" x 2" Deep
Guide Size: 1" x 1-27/32" x 11/16" x 3/32" Thick
Strike Size: 15/16" x 2-1/4" x 1/16" Thick
Rub Plate Size: 1-1/4" x 1-11/16" 3/64" Thick
Auxiliary Fire Latch Size: 1" x 1-3/4" x 3-1/4 Deep

Stocked Product
10B, 32D

Ives – *Floor Stops & Holders*

FS13 Dome Stop

- Standard FS13 for use where no threshold is used.
- Heavy-Duty Cast Dome Stops constructed of brass.
- Unique riser design of R14 (below) allows easy conversion to threshold application.
- Units are packed with fasteners sufficient for mounting in all types of floor construction, including concrete.
- Meets ANSI/BHMA 156.6, L12141.

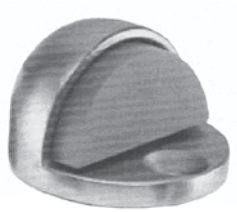

Overall Height 1”
Base Height .. 5/32”
Base Diameter 1-3/4” Round

Stocked Product
605, 613, 625, 626

FS17 Dome Stop

- One piece dome stop for use with thresholds.
- Heavy-Duty Cast Dome Stops constructed of brass.
- Units are packed with fasteners sufficient for mounting in all types of floor construction, including concrete.
- Meets ANSI/BHMA 156.1, L12161.

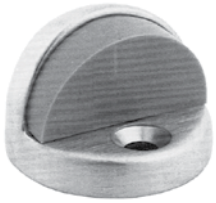

Overall Height 1-11/32”
Base Height .. 1/2”
Base Diameter 1-3/4” Round

Stocked Product
605, 613, 625, 626

R14 Riser only

- Adapts the FS13 Dome Stop to threshold use.
- Brass Die Cast Construction.
- Meets ANSI/BHMA 156.1, L12161 when used with FS13 Dome Stop.

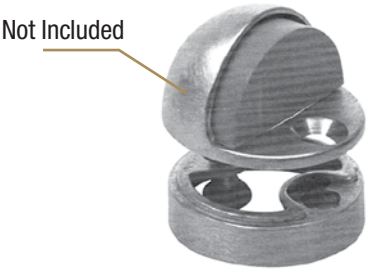

Riser Height .. 5/16”
Base Diameter 1-3/4” Round

Stocked Product
605, 613, 625, 626

Ives – *Floor Stops & Holders*

FS436/FS438 Floor Dome Stop

- FS436 For doors without threshold
- FS438 For doors with threshold or undercut doors
- Heavy Duty cast dome stiops constructed of brass, bronze, or aluminum
- Meets ANSI A156.6 L12141 for brass and L32141 for aluminum
- Packed with wood screw and plastic anchor

FS436
Overall height: 1”
Base height: 3/16”
Base diameter: 1-3/4” x 2” oval

FS436
Overall height: 1-3/8”
Base height: 9/16”
Base diameter: 1-3/4” x 2” oval

Stocked Product

FS436	10B, 26, 26D
FS438	10B, 26, 26D

FS441 Floor Door Stop

- Cast material
- Accommodates doors undercut up to 1-1/2”
- Designed for commercial applications
- Non-marring rubber tip
- Conforms to ANSI A156.16
  L12131 for brass and
  L32161 for aluminum
- Packed with expansion shield and Tampin
- 2-11/16” x 1-5/8” x 2-1/8” (L x W x H)

Stocked Product
605, 613, 619, 625, 626

FS444 / FS448 Heavy Duty Floor Stops

- Cast material
- Accommodates doors undercut up to 2-1/2”
- Designed for commercial applications
- Non-marring rubber tip
- Conforms to Fed. Spec. No. 1328E
- Conforms to ANSI A156.16
  L12131 for brass and
  L32131 for aluminum
- FS444 Packed with expansion shield and lead shield, for masonary type mounting
- FS448 Packed with wood screws, for drywall mounting

FS444

FS448

Stocked Product

FS444	605, 613, 619, 625, 626
FS448	613, 626

Ives – *Floor Stops & Holders*

FS446 / FS450 HD Floor Door Stop & Holders

- Cast material
- Accommodates doors undercut up to 2-1/2”
- Designed for high traffic areas in commercial applications
- Resilient, non marring rubber tip
- Conforms to Fed. Spec. No. 1329E
- FS446 Conforms to ANSI A156.16 L11371 for brass and L31371 for aluminum
- FS446 Packed with expansion shield and lead shield, for masonary type mounting
- FS450 Packed with wood screws, for drywall mounting

FS446

FS450

Stocked Product
10B, 26D

FS455 Door Holder

- Cast brass or aluminum construction.
- Non-marring rubber shoes have corrugated bottoms to provide secure grip and a shank which forms its own thread when screwed into threaded cavity of holder. When worn, shoes are easily replaced.
- Door-to-floor clearances of 2’ or less.
- Meets ANSI/BHMA 156.16, L11382 for brass and L31382 for aluminum.
- Plate Height 1” x 3/4”
- Plate Width 1” x 3/4”

Stocked Product
605, 613, 619, 625, 626

WS401 CVX & CCV Wall Bumpers

- Constructed in heavy-duty cast brass or aluminum base.
- Special retainer cup makes rubber tamper resistant.
- The WS401 CVX unit is designed with a convex rubber bumper, packed with wood screw and plastic anchor.
- The WS401 CCV unit is designed with a concave rubber bumper which avoids damage to locks with projecting buttons, packed with wood screw and plastic anchor.
- Designed with a convex rubber bumper packed with screw and drywall anchor.
- Unit is designed with a concave rubber bumper which avoids damage to locks with projecting buttons and is packed with screw and drywall anchor.
- WS401 CVX meets ANSI/BHMA 156.16 L12101 for brass and L32101 for aluminum.
- WS401 CCVmeets ANSI/BHMA 156.16 L12251 for brass and L32251 for aluminum.

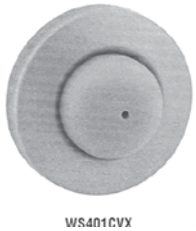

WS401CVX

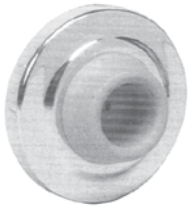

WS401CCV

Stocked Product

WS401CCV	26, 26D, 3, 15
WS401CVX	10B

Ives – *Floor Stops & Holders*

WS406CVX
Convex Wall Door Stop with Plastic Anchor

- Wrought material
- Factory assembled backplate
- Concealed mounting
- Easy installation by inserting screw through small hole in rubber
- Conforms to ANSI A156.16 L22101 for brass, L42101 for aluminum and L52101 for stainless steel
- Packed with wood screw and plastic anchor

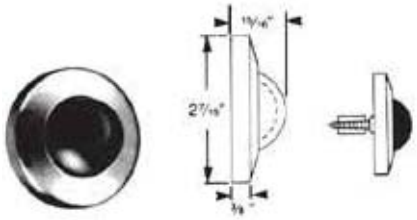

Stocked Product
613, 625, 630

WS407CVX
Convex Wall Door Stop with Plastic Drywall Anchor

- Wrought material
- Factory assembled backplate
- Concealed mounting
- Easy installation by inserting screw through small hole in rubber
- Conforms to ANSI A156.16 L22101 for brass, L42101 for aluminum and L52101 for stainless steel
- Packed with wood screw and plastic anchor

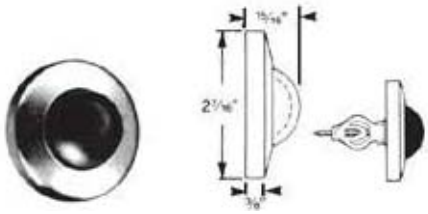

Stocked Product
613, 625, 630

WS406CCV Concave Wall Door Stop with Plastic Anchor

- Wrought material
- Concave rubber permits knob to strike stop without damaging or engaging lock mechanism
- Factory assembled backplate
- Concealed mounting
- Easy installation by inserting screw through small hole in rubber
- Conforms to ANSI A156.16 L22251 for brass, L42251 for aluminum and L52251 for stainless steel
- Packed with wood screw and plastic anchor

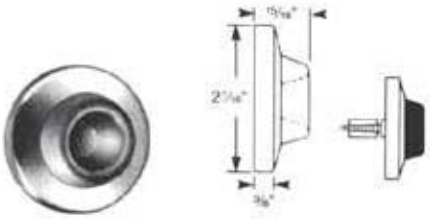

Stocked Product
613, 625, 630

WS407CCV Concave Wall Door Stop with Plastic Drywall Anchor

- Wrought material
- Concave rubber permits knob to strike stop without damaging or engaging lock mechanism
- Factory assembled backplate
- Concealed mounting
- Easy installation by inserting screw through small hole in rubber
- Conforms to ANSI A156.16 L22251 for brass, L42251 for aluminum and L52251 for stainless steel
- Packed with plastic drywall anchor and screw

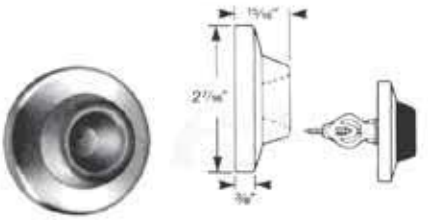

Stocked Product
613, 625, 630

Ives – *Floor Stops & Holders*

WS443 HD Wall Door Stop

- Cast material
- Designed for commercial applications
- Non-marring rubber tip
- Conforms to Fed. Spec. No. 1320E
- Conforms to ANSI A156.16 L12021 for brass and L32021 for aluminum
- Packed with expansion shield and lead shield
- 2-1/4" x 3-5/8" (Dia. x Proj.)

Stocked Product
626

WS445 HD Wall Door Stop & Holder

- Cast material
- Heavy duty for high traffic areas
- Resilient, non-marring rubber tip
- Conforms to Fed. Spec. No. 1321
- Conforms to ANSI A156.16 L11341 for brass and L31341 for aluminum
- Packed with expansion shield and lead shield for masonry type mounting
- 2-1/4" x 3-5/8" (Dia. x Proj.)

Stocked Product
626

WS447 HD Wall Door Stop

- Cast material
- Designed for commercial applications
- Non-marring rubber tip
- Conforms to Fed. Spec. No. 1320
- Conforms to ANSI A156.16 L12011 for brass and L32011 for aluminum
- Packed with wood screw
- 2-1/4" x 3-5/8" (Dia. x Proj.)

Stocked Product
625, 626

WS449 HD Wall Door Stop & Holder

- Cast material
- Heavy duty for high traffic areas
- Resilient, non-marring rubber tip
- Conforms to Fed. Spec. No. 1321
- Conforms to ANSI A156.16 L11341 for brass and L31341 for aluminum
- Packed with wood screw
- 2-1/4" x 3-5/8" (Dia. x Proj.)

Stocked Product
626

Ives – *Roller Bumpers*

RB470 Roller Bumper

- Cast material
- Designated to eliminate the possibility of interfering doors striking each other or of interlocking knobs
- For use where two right-hand or two left-hand doors interfere, meeting at odd angles in a corner
- Conforms to ANSI A156.16 L12212
- Packed with sheet metal screws
- (1-5/8" x 2-1/4") x 2-3/4" x 2-3/4" (base x A x B)

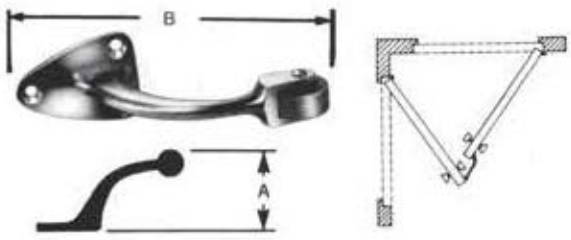

Stocked Product
626

RB471 4-1/2" Length Roller Bumper

- Cast material
- Designated to eliminate the possibility of interfering doors striking each other or of interlocking knobs
- For use where doors in a corner are of opposite hand
- Nos. 471 and 472 conform to Fed. Spec. No. 1341
- No. 471 conforms to ANSI A156.16 L12192
- Packed with sheet metal screws
- 471 2" dia. x 4-1/2" (base x Proj. A)

Stocked Product
626

Ives – *Door Silencers*

SR64

- For use on metal frames featuring pneumatic design that, once installed, forms an air pocket to absorb shock and reduce noise of door closing.
- Tamper-proof once installed on the frame.
- Proper installation also eliminates door rattle and provides constant tension for door latches or locks.
- Packed in bags of 100.
- Each bag has an installation tool included.
- Meets ANSI/BHMA 156.16, L03011
- Finish: gray

SR65

- For use on wood frames, also features pneumatic design to cushion shock and absorb noise.
- To prevent removal, a small brad should be driven into stop strip and through stem of silencer, as shown in the detail.
- Packed in bags of 100.
- Each bag has an installation tool included.
- Meets ANSI/BHMA 156.16, L03021
- Finish: gray

Ives – *Commercial*

MB1 & MB2 MOUNTING BRACKETS

Product	Jamb Depth	Stop Width
MB1	4-3/4" Min.	Over 2-1/2"
MB2	4-3/4" Min.	Up to 2-1/2"

- Allows stop mounted hardware to be properly installed without damaging the coordinator.

Stocked Product
USP

COR SERIES BAR COORDINATOR

- The COR series coordinators are designed for use on pairs of doors when one door needs to close before the other.
- All COR units function easily. The active door lever, located nearest to the active stop, holds the active door open until the trigger mechanism is released by the closing of the inactive leaf.
- All COR units are equipped with an override feature which allows the active door to close under extreme pressure.
- All COR units are compatible with flush bolts.
- The COR series does not cover the entire length of the stop, so a filler bar can be provided to maintain architecturally clean lines.
- Cor series coordinator channels and fillers are made of aluminum and are normally furnished US28 finish.
- Meets ANSI/BHMA A156.3, type 21A

Dimensions: 1-5/8" Wide x 5/8" Deep x Ordered Length

Stocked Product
COR52 x FL20 Filler Plate

LG1 LOCK GUARDS

- Units are non-handed and incorporate security frame pin to prevent separation of the door and frame.
- Unit covers the latch bolt area of the door and lock, thereby providing added protection from burglars, vandals or normal abuse.
- Ideal for use with mortise or cylindrical locks.
- Easy installation.
- Through bolted with carriage bolts and nuts.
- Finishes: Stainless steel - US32D, Steel - US2G

Stocked Product
US32D, US26

Ives- *Commercial Roller Latches*

RL30

- Actuation is simple, closing of the door causes the roller to fall in the depression of the strike, thereby holding the door closed.
- The projection of the roller is easily adjusted using adjusting screws on the face of the unit.
- Maximum projection of the roller is 3/8" allowing for variance in the door clearance.
- Nylon Roller Standard.
- Forged Brass Construction.
- Meets ANSI/BHMA A156.16, E19091.
- Finishes: US3, US4, US10, US10B, US26, US26D.
- Optional Roller-F- Nylon covered brass roller.
- Optional Strike-A-ASA

Dimensions:
Body: 1Il Wide x 3-3/8" Long x 1-11/16" Deep
Strike: 1-11/16" Wide x 2-1/4" Long x 5/32" Thick
Optional ASA Strike: STK726 (not shown): 1-1/4" wide x 4-7/8" long x 3/32" thick

Stocked Product
US3, 10B, US26, 32D

RL32

- Actuation is simple, closing of the door causes the roller to fall in the depression of the strike, thereby holding the door closed.
- The projection of the roller is easily adjusted by turning knurled knob on back of latch.
- Maximum projection of the roller is 1/2" allowing for variance in the door clearance.
- Fits heavy-duty cylindrical tock cutout.
- Nylon Roller Standard.
- Non-handed.
- Brass or Stainless Steel Construction.
- Meets ANSI/BHMA A156.16, E191 01.
- Finishes: US3, US4, US10, US10B, US32, US32D.
- Optional Roller-F- Nylon covered brass roller.
- Optional Strike-A-ASA.

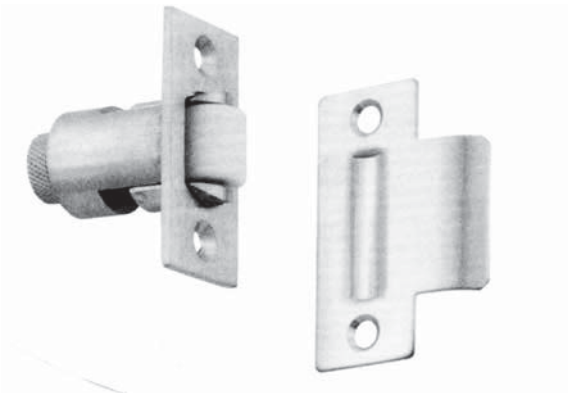

Dimensions:
Body: 1-1/8" Wide x 2-1/4" Long x 2-1/4" Deep
Strike: 1-1/8u Wide x 2-3/4" Long x 3/32" Thick
Optional ASA Strike: STK726 (not shown): 1-1/4" wide x 4-7/8" long x 3/32" thick

Stocked Product
10B, 32D

Ives – *Vandal Resistant Trim*

VR900 Vandal Resistant Trim

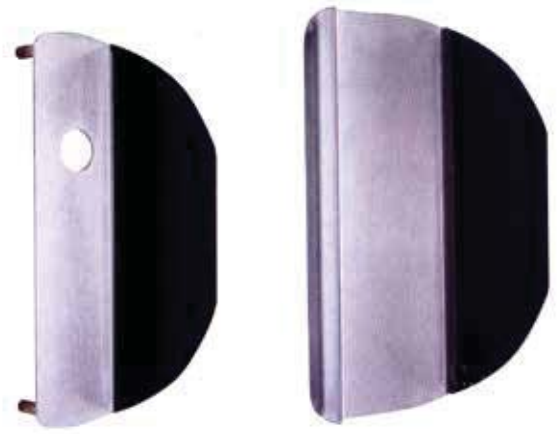

Features:

- Stainless Steel construction, 11 gage (0.120" thick).
- Thru-bolts and rugged mounting screws for maximum fastening strength.
- 1/4-20 screws and stainless steel finishing washers supplied with VR900 models; 10-24 screws supplied with VR910 models.
- Built-in lock protector prevents vandalism to mortise latchbolt (available on certain models).
- Extra-tough stainless steel cylinder collar prevents pipe wrench or similar tool from damaging cylinder. Tapered design prevents side impacts from transferring directly to cylinder. Collar spins freely.
- Sleek, attractive design.
- Furnished with mounting screws for door thicknesses of 1-3/4" to 2-1/4".
- Finish: US32D.
- Grip coated in black plastisol for softer touch and resilience to temperature extremes. Grip designed for comfortable operation.
- Meets ANSI/BHMA 156.13, Trim Security Test and California State Accessibility Standards Title 24.

VR910-DT

- For use with Von Duprin 98/99 Series Rim and Vertical exit devices.
- Thru-bolts directly to device.
- Pull operation only. No cylinder cutout.

Width	5-1/4"
Height	11"
Thru-bolt pattern	1-3/8" W X 7" H
Clearance to Door	1-1 /2"
Proj.	1-7/8"

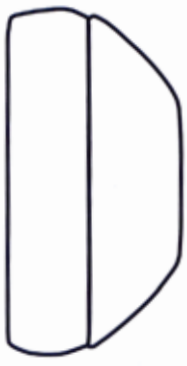

Stocked Product
32D

VR910-Nl

- For use with Von Duprin 98/99 Series Rim and Vertical exit devices.
- Thru-bolts directly to device.
- Includes cylinder cutout.
- Tailpiece guide and cylinder cup provided.

Width	5-1/4"
Height	11"
Thru-bolt pattern	1-3/8" W X 7" H
Clearance to Door	1-1 /2"
Proj.	1-7/8"

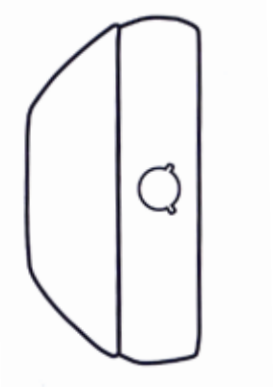

Stocked Product
32D

Jackson - Overhead Closers

20101M01 - Overhead Concealed Closer

Application: aluminum doors exterior and interior

Features

- ½" spindle length
- Regular duty spring size
- Available in 90 and 105 degree swing hold or no hold options
- Dual valve closing control – sweep and latch speeds are adjustable
- Cushioned tri-polymer backstop protects the closer
- Non handed
- Single or double acting
- Suitable for both center hung and offset applications
- UL Listed, UL 228 (non-hold only)

Options

- 7/8" and 1-13/64" spindle lengths
- Extra Light, Light, and Heavy Duty Spring Sizes

Stocked Product

Item #	Description
20101M01	105 NH
20101M02	105 HO
20101M03	90 NH
20101M04	90 HO

20101M17 - Adjustable Spring Power Overhead Concealed Closer

Applications: ADA compliant entrances and where HVAC stack pressure is an issue

Features

- Meets ADA requirements
- Adjustable Spring Power for regulating opening force most accurately sizes 2-4
- Fully adjustable independent valves for sweep and latching functions
- Full ball bearing operation for increased efficiency
- Cushioned tri-polymer backstop protects the closer
- Non handed
- Single or double acting
- Suitable for both center hung and offset applications
- ½" spindle length
- UL Listed, UL 228 (non-hold only)

Options

- 7/8" and 1-13/64" spindle lengths
- End load arms
- Side load arms
- Bottom pivots
- ¾" off set and intermediate pivots
- Off set arms and slide tracks
- Mounting Clips

Stocked Product

Item #	Description
20101M17	105NH
20101M18	105 HO
20101M19	90 NH
20101M20	90 HO

Jackson - Overhead Closers

20104M04 - Overhead Closer

Application: All glass herculite-type doors with patch or rail hardware and aluminum doors

Features

- Extended spindle 7/8” spindle length
- Regular duty spring size
- Available in 90 and 105 degree swing hold or no hold options
- Dual valve closing control – sweep and latch speeds are adjustable
- Cushioned tri-polymer backstop protects the closer
- Non handed
- Single or double acting
- Suitable for both center hung and offset applications
- UL Listed, UL 228 (non-hold only)

Options

- ½” and 1-13/64” spindle lengths
- Extra Light, Light, and Heavy Duty Spring Sizes

Stocked Product

Item #	Description
20104M01	105 NH 7/8”
20104M02	105 HO 7/8”

Jackson - Center Hung Closer Accessories

202000 - End Load Arm for Top Rail

Features

- For 1" deep top rail
- Includes mounting hardware
- Forged steel

20219 - Mounting Clip Package

Features

- Mounting clip package
- Center Hung

20400B - Side Load Arm

Features

- For ½" deep top rail
- Includes mounting hardware
- Forged steel

Jackson - Exits

2086 - Concealed Vertical Rod Exit Device

Application: Narrow, Medium, Wide stile aluminum doors (min 1 ¾")

Features

- Handed – Not reversible
- Dogging from inside manual operation or outside cylinder
- Optional cylinder dogging available
- Independent top and bottom bolt action with ½" throw
- Includes Humpback Top Strike TM to ensure secure closing
- Trigger action, positive bolt release
- Adjustable bolt guides allow bolt adjustment with door installed
- Concealed silencers quiet rod operation
- Field sizable to 30"
- Listed ANSI/UL 305 panic hardware and ANSI 156.3 Grade 1 panic hardware
- Available as an Electrified Unit – 312086E requires 302616 power supply

Stocked Product

Item #	Handing	Finish
2086L	LHR	313, 628
2086R	RHR	313, 628

Jackson - Pivots

201060 - Type P Pivot

Features

- For Floor Installation
- For 1-9/16” deep bottom rail

201570- GW Center Hung Pivot

Features

- For Floor Installation
- For 1-9/16” deep bottom rail

20902 - G Type Pivot

Features

- For floor installation
- For 1-1/2” deep bottom rail
- Height adjustable

20944 - Ge Type Pivot

Features

- For threshold installation
- For 1-1/2” deep bottom rail
- Height adjustable

Jackson - Pivots

¾" Offset Intermediate Pivots

J-14 - Pivot Package

Features

- For aluminum doors and frames
- Max weight 125lbs.
- Reversible – non handed
- Jamb slot-in
- Extruded aluminum
- 5/8" vertical adjustment
- Full race ball-bearing and iolite bronze bushing
- Fully retractable pin for easy installation

Stocked Product

Part #	Description	Finish
41J14S313	Short Leg	Dark Bronze
41J14S628	Short Leg	Clear Aluminum

J-19 - Intermediate Pivot

Features

- For aluminum or metal doors and frames
- Max weight 150lbs.
- Full mortise – Handed
- Made from aluminum
- Also available: 41J190HD
- Max weight 1,000lbs.
- Made from Brass or Bronze of Stainless Steel
- 5/8" vertical adjustment
- Full race ball-bearing and iolite bronze bushing
- Fully retractable pin for easy installation

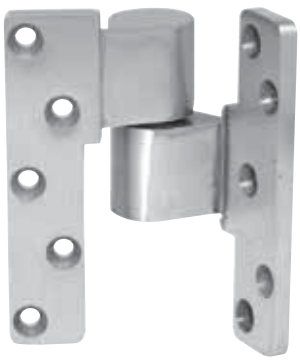

Stocked Product

Part #	Description	Finish
41J190L313	Left	Dark Bronze
41J190R313	Right	Dark Bronze
41J190L628	Left	Aluminum
41J190R628	Right	Aluminum

Jackson - Pivots

¾" Offset Pivot Package

Features

- For aluminum frames and doors up to 125lbs.
- Extruded or Cast aluminum
- Full race ball-bearing and iolite bronze bushing
- Fully retractable pin for easy installation
- 1/8" vertical adjustment

Stocked Product

Item #	Descrition	Finish
41J25L313	Left	Dark Bronze
41J25R313	Right	Dark Bronze
41J25L628	Left	Aluminum
41J25R628	Right	Aluminum

Offset Pivot Set

Stocked Product

Item #	Descrition	Finish
41LHDU	Left	Dark Bronze
41RHDU	Right	Dark Bronze
41LHA	Left	Aluminum
41RHA	Right	Aluminum

689628 - Non-Handed Offset Top and Bottom Pivot Set

For Use With 1-3/4" Aluminum Doors

The CRL J689 Offset Pivot Sets are designed to be used with standard 1-3/4 inch (44 millimeter) storefront aluminum doors weighing not more than 125 pounds (57 kilograms). These Pivots are perfect for new or retrofit applications.
Finish: ALUMINUM

Jackson - Panic Accessories

301084 - Hump Back Strike™ package for Jackson top bolt exit devices

Product Description & Features

- Prevents “bottom-bolt-drag”
- Use with all Jackson top bolt panics
- Ensures smooth, secure, action

Stocked Product

Item #	Finish
301084313	Dark Bronze
301084628	Aluminum

30821 - Mortise cylinder mountingpad for Jackson concealed vertical rod exit devices

Features

- For use with 1” outside cylinder
- Use MS type cam

Stocked Product

Item #	Finish
30821J313	Dark Bronze
30821J628	Aluminum

Jackson - Offset Closer Accessories

201134LC628

Features

- 201133 Forged Steel Offset arm
- 201129 slide track assembly for 5/8" shallow rail

201376 - Mounting "D" Clip Package - Special Mount

20900LC - Offset Arm Assembly

Features

- 20942 Forged Steel Offset Arm
- 20368 Slide Channel Assembly For 7/8" Deep Rail

20951 - Mounting "D" Clip Package - Offset Hung

Stocked Product
Finish **628**

KABA Access Control

L1000 - Series Lever

Application:

- The L1000 series provides full mechanical push button access with no electrical wiring, electronics or batteries. Exterior access is by combination. Interior egress is free at all times. The lock meets ADA standards

Specifications

- ANSI A156.2 grade 1
- ASA strike
- Backset 2-3/4”
- Door thickness 1-3/8” - 1-3/4”
- Installation ASA 161 door prep. with additional through bore holes required
- Handed not field reversible

Optional Features:

- Key override - can be used to over ride combination and gain access using a key - **supplied less cylinder**
- Key override is prepped for I.C. cylinders only

Stocked Product

PART No.	DESCRIPTION	FINISH
L1011	Lever only	26D
L1021B	Lever with Best Override Less Core	26D
L1021C	Lever with Corbin Override Less Core	26D
L1021S	Lever with Schlage Override Less Core	26D

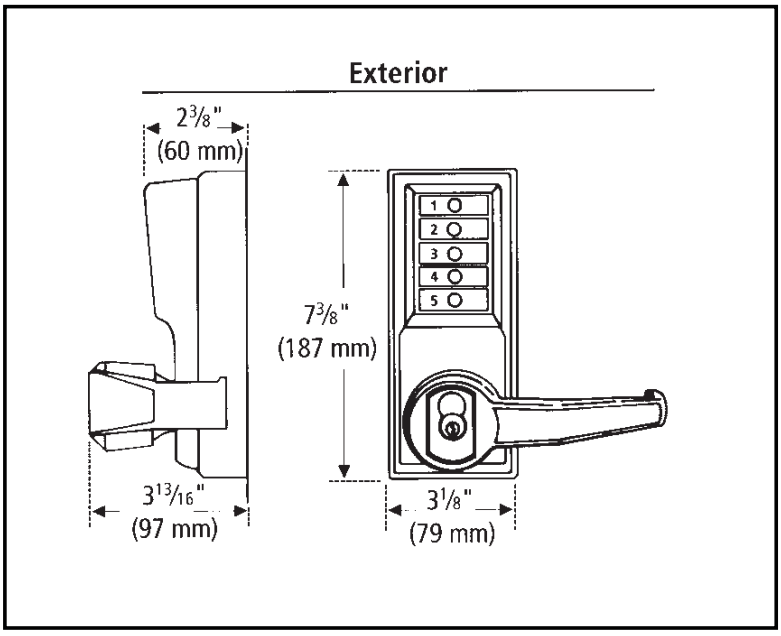

KABA Access Control

LP1000 - Series **Lever**

Operation:

- Designed to operate surface mounted exit devices from the outside. Exit device not supplied. Exterior access is by combination. Egress is by interior exit device and is free at all times

Specifications

- ANSI A156.2 grade 1
- Strike not supplied
- Door thickness up to 2-1/4”
- Handed not field reversible
- Exit device compatibility, Von Duprin EO or EO-F for 22, 88NL, 98, 99, 9857, 9957, Detex Advantex 10, 20, 40 series

Optional Features:

- Key override - can be used to override combination and gain access using a key - **supplied less cylinder**
- Key override is prepped for I.C. cylinders only

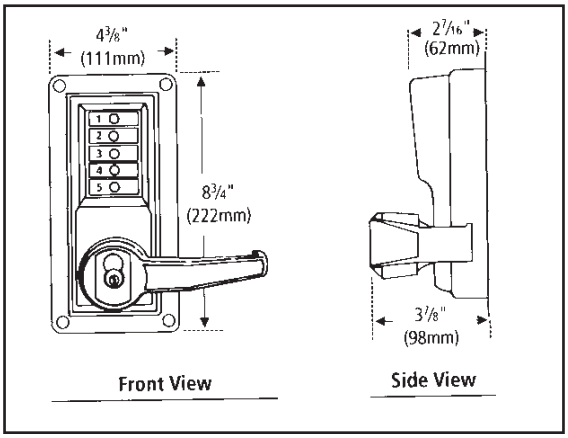

Stocked Product

PART No.	DESCRIPTION	FINISH
LP1020B	Lever with Best IC Override Less Core	26D
LP1020S	Lever with Schlage IC Override Less Core	26D

L1000 & LP1000 Series Door Handing:

You must specify the handing of your door! Look at the door in its closed position standing on the outside (exterior push button side)
Note: LP1000 are either LHR or RHR

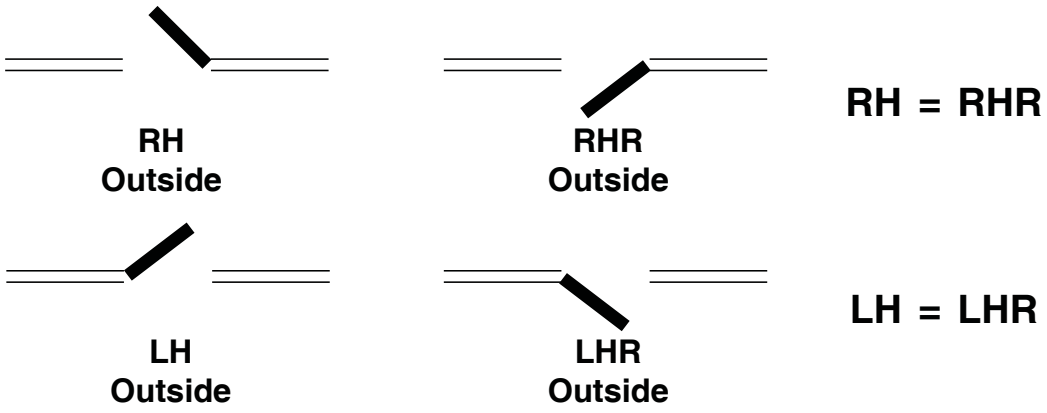

KABA Access Control

E2031 - Series Cylindrical electronic pushbutton Lock

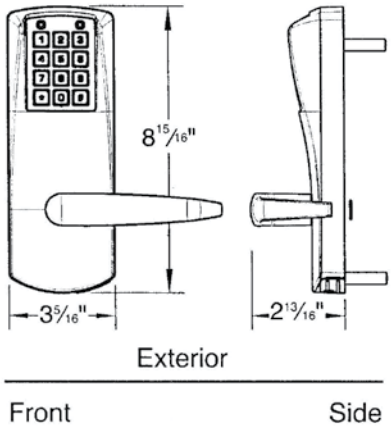

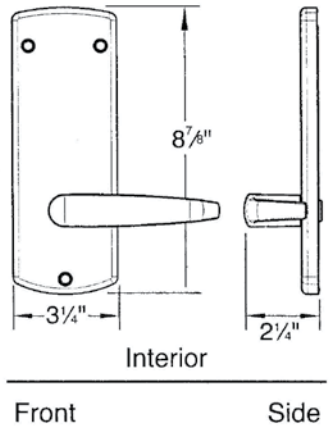

Features

- Cylindrical latch with UL10C Fire Rating
- 100 access codes per door, over 100 million possible code combinations
- Locks are easily programmed via keypad
- Non-handed
- Service codes programs for one time access or “come and go” access for 1 to 24 hours
- Code length is adjustable to accept 4 to 8 digits
- Anti-tamper lockout is adjustable from 3 to 9 invalid attempts with an adjustable period of 0 to 90 seconds
- Re-Lock time is adjustable from 2 to 20 seconds
- Batteries located in exterior housing. AAA provides more than 100,000 cycles.
- No wiring to or through the door- no risk of pinched wires
- Backset 2-3/4”; Special order 2-3/8”
- Door Thickness: 1-3/8” to 2-1/2”
- Warranty: 2 year from installation
- With Schlage C keyway override or I/C Best Format

Stocked Product

E2031XS Schlage C: 26D
US26D only also available in US4 special order
E2031BS Schlage IC less Core: 26D

KABA Access Control

5000 - Series **Simplex**

Features

- Keyless convenience
- Combination can be quickly changed
- Easy to install on wood or metal doors
- 3 year warranty
- Non handed, one lock for both right and left hand door applications
- Easy to maintain - no batteries
- Mechanical key overide available in:

- Schlage C keyway
- Best I.C. less core
- Schlage RC less core

Simplex 5000

Specifications

- Certified - ANSI / BHMA A156.2 Grade 1
- Compliance - 3 hour UL / ULC fire door rating
- ASA strike
- Backset 2-3/4”
- Door thickness 1-3/8” - 2-1/4”
- Installation ASA 161 with two additional bore holes

Stocked Product

PART No.	DESCRIPTION	FINISH
5021XS	Lever with Schlage C Keyway Override	26D
5021B	Lever with Best Prep Override	26D
5021S	Lever with Schlage RC prep Less Core	26D

Exterior

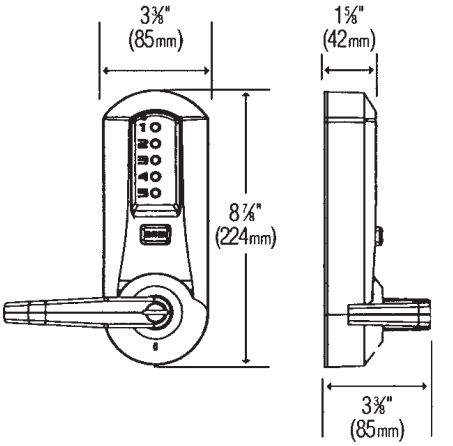

Interior

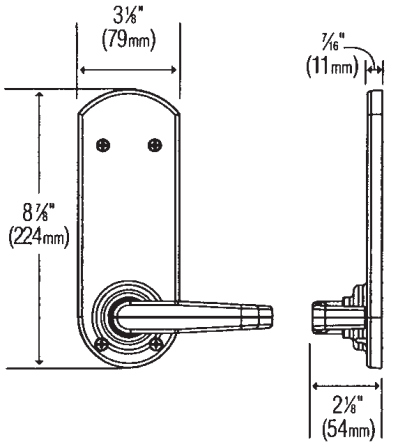

KABA Access Control

E5031 - Series **Lever**

Features

- Accommodates both indoor & outdoor application
- Retrofits to any standard 161 prep
- 3 year warranty from lock activation date
- ADA compliant lever Grade 1
- 100 access codes, programmable passage mode
- Extensive audit trail
- Non handed

- **Installation requires no wires through the door**

Stocked Product

PART No.	DESCRIPTION	FINISH
E5031XS	Lever with Schlage C Keyway override	26D
E5031B	Lever with Best Prep Override Less Core	26D
E5031S	Lever with Schlage RC Prep Less Core	26D

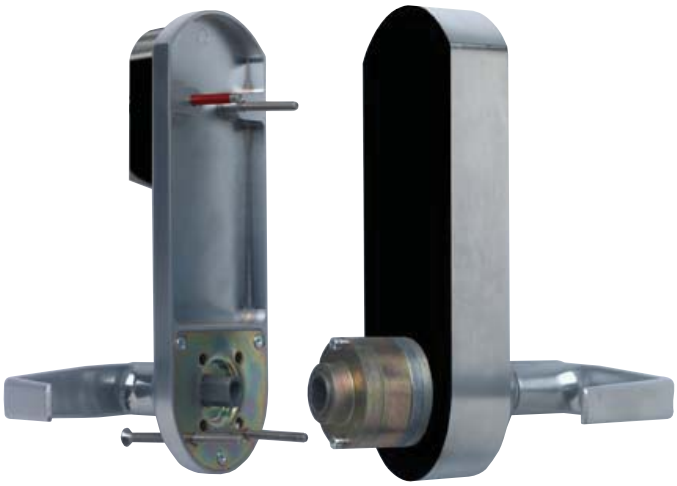

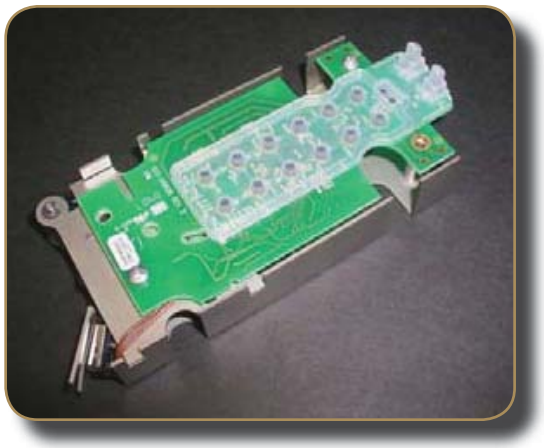

- Fully contained electronics module in exterior housing

Keedex

K-6
Master Follower

This remarkable follower is a wise choice for either the newcomer or master locksmith. Made of solid brass, it will out last those made of plastic or aluminum. The capabilities of this machined follower far exceed any follower on the market today. It can be used as a regular follower, or as a master pin remover and follower on Schlage, Sargent, Kwikset, Weiser, Almont padlocks and many others. Special taper allows smooth operation and better control over sticking pins.

K-12, K-12D
Protect-A-Lok

Finally a product designed to protect locks and other hardware from impact damage. The Keedex K-12 Protect-A-Lok, made from Lexan polycarbonate, is virtually indestructible. Designed for use in areas where locks may have a chance of getting hit by carts, forklifts or vehicles. Can be used with levers, knobs, panic hardware and more. Installs in minutes. Guaranteed for 5 years. Available in Cream (K-12) and Duranodic (K-12D).

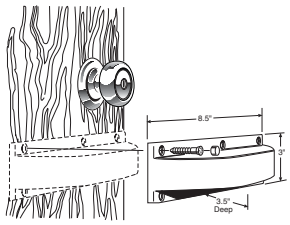

K-22
Lever Opening Tool

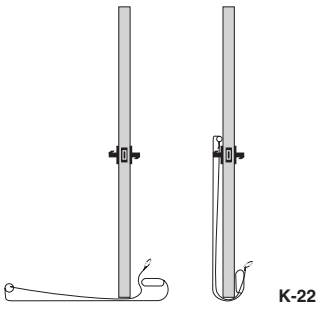

IF YOU CAN SLIDE THIS TOOL UNDER THE DOOR, YOU WILL OPEN IT!
This tool is to be sold only to locksmiths and law enforcement agencies.
This tool is not to be used unlawfully. Keedex will not be responsible for the misuse of this tool.
Replacement Cable Available: Part# K-22CABLE (Special Order)

K-24
Hardened Cylinder Guards

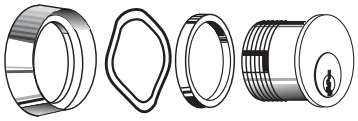

When installed, these free spinning Cylinder Guard rings prevent would-be burglars or intruders from forcibly unscrewing the lock cylinder with channel locks, vise grips, or other burglary tools

Stocked Product

PART No.	Finish	Cylander Length	
K-24A1	Aluminum	1-1/8”	1 pack
K-24A	Aluminum	1-1/8”	6 pack
K-24B	Duranodic	1-1/8”	6 pack
K-24-26D	Satin Chrome	1-1/8”	1 pack
K-24LA	Aluminum	1-1/4”-1-3/8”	Large size
K-24LB	Duranodic	1-1/4”-1-3/8”	Large size

All packed ring, washer & spacer

Keedex

KBX Weldable Gate Boxes

K-BXA/R

K-BXMOR1

KBXRHO

KBXSGL

KBXDBL

Stocked Product

PART No.	Description
K-BXA/R	Adams Rite 1 1/8”
K-BXDBL234	Double Hole, 2 3/4” BS, 2 1/8” Hole
K-BXES3A	Hess, 5000 Series, Aluminum
K-BXMOR1	Schlage Mortise, Aluminum 10 gauge
K-BXRHO	Schlage ND, 2 3/4” BS, 2 1/8” Hole
K-BXSGL	Single Hole, 2 3/8” BS, 2 1/8” Hole
K-BXSGL234	Single Hole, 2 3/4” BS, 2 1/8” Hole
K-BXSGL234AL	Single Hole, 2 3/4” BS, 2 1/8” Hole, Aluminum
K-BXSIM	Kaba 1000, 5000 Series, Alarm Lock DL2700
K-BXSIMAL	Kaba 1000 Series, Alarm Lock DL2500, Aluminum

Keedex

Use these door loops when you need to transfer low-voltage electrical current from the door frame to the door.

Stainless Steel Door Loop

All stainless steel design.
Flexible stainless steel conduit and stainless steel end pieces and mounting screws

K-DS

Stocked Product

PART No.	Description	
K-DS	1/4" x 18"	Stainless

Armored Door Loop

Entire assembly has an attractive and durable powder coat finish.

K-DLB

Stocked Product

PART No.	Description	
K-DLA	1/4" x 18"	Aluminum
K-DLA24	1/4" x 24"	Aluminum
K-DLB	1/4" x 18"	Duranodic
K-DL38A	3/8" x 18"	Aluminum
K-DL38A24	3/8" x 24"	Aluminum
K-DL38B	3/8" x 18"	Duranodic

Tamper Resistant Screwdriver - *TAMPER*

Keedex has a new Tamper Resistant Screwdriver. This screwdriver comes with eleven interchangeable tips.
Includes the following: Six tamper resistant torx tips (T10, T15, T20, T25, T27 & T30).
Three tamper resistant hex tips (5/32", 3/16" & 7/32").
Two Spanner Tips (#6 & #8).

All tips fit into
the screwdriver's storage handle.

Invaluable For:
Commercial & Institutional Locksmithing
Automotive Work
Access Control

LAB - *Pins, Springs, Shims, Caps*

LAB Pins (S1)

SMARTPAC

Separates pins into two tamper proof, safety sealed compartments with large increment identification. Clear package allows view of content. 150 per pack.

Stocked Product

.003 increments except where indicated

Available top pins:
024, 027, 030, 036, 039, 042, 045, 051, 054, 057, 060, 063, 069, 072, 075, 081, 084, 087, 090, 093, 099, 105, 108, 111, 114, 120, 126, 135, 138,
155*, 160*, 165*, 200*. 235*

Available bottom pins:
135, 147, 156, **160***, 165, 168, 171, 174, 180, 183, 186, 192, 195, 201, 204, 207, 210, 216, 219, 222, 225, 231, 234, 240, 246, 249, 255, 258, 261, 264, 270, 276, 279, 282, 285, 288, 291, 294, 297, 300, 306, 309, 312, 315, 330, 333, 351, 354

* indicates .005 increment

LAB Brand Interchangeable Core Pins (for BEST only)

Best I.C. Core Pins for A2. systems for use with Best Interchangeable Cores.
A3, A4 available as a special order.

Stocked Product

Top pins: Brass
.025-2B, .037-3B, .050-4B, .062-5B, .075-6B, .087-7B, .100-8B, .150-12B, .175-14B, .200-16B, .225-18B

Bottom pins: Nickel Silver
.110-0A, 122-1A, .135-2A, .147-3A, .160-4A, .172-5A, .185-6A, .210-8A, .222-9A

P1 Poly Bagged, 100 per bag

Curved Shims

.0015 Stainless Steel
100 per pack

Stocked Product

LSMOV100 Curved Shims

Cylinder Springs (P1)

Stocked Product

Universal .115

115LP1	.115L	Long
115SP1	.115S	Short

.115S

.115L

P1 Poly Bagged, 100 per bag

LAB - *Pins, Springs, Shims, Caps*

Springs for Best

108 Long
Packed V1 100 per Vial

Stocked Product

108BV1 Best Springs

Springs for Falcon

108 Short
Packed P1 100 per Poly Bag

Stocked Product

108FP1 Falcon Springs

Springs for Schlage

F Series Compressible Cylinder Springs
Stainless Steel
Packed V1 100 per Vial

Stocked Product

SPGSCHV1 Schlage Springs

Original Designed I.C. Core Caps

100 per Pack
Stamped Brass

Stocked Product

I027S1 IC Core Caps

Springs for Schlage

Cylinder Cap Springs, Stainless Steel
Packed V1 100 per Vial

Stocked Product

SP74V1 SCH Cap Retainer Spring

Original Design Brass Covers

100 per Pack

Stocked Product

FSC6V100 6 Pin Brass Covers
FSC7V100 7 Pin Brass Covers

LAB - *Kits*

Wedge Pro

.003 Increments
124 sizes Tops: .010 - .200
Bottoms: .156 - .360
Size: 21-1/2" x 7-3/4" x front 2" Back 3"

- Comes with Color Passport Pin Chart
- Steel Construction with emerald green metallic paint

EPK005 available as a special order

Stocked Product

EPK003 Wedge Pro

Steel Mini Kits

- Measures 8"x 6"x 1-1/16"
- Small enough for a toolbox

LMK003

.003 Increments
81 Sizes
Masters: .024 - .090
Drivers: .093 - .235
Bottoms: .156 - .354
Cylinder Springs

LMK005

.005 Increments
81 Sizes
Masters: .010 - .090
Drivers: .095 - .200
Bottoms: .155 - .360
Cylinder Springs

Stocked Product

LMK003	Steel Mini Kit	.003 Increments
LMK005	Steel Mini Kit	.005 Increments

LAB - *Kits*

Mini Dur-X Pinning Kits

LMDOIC

A2 INTERCHANGEABLE CORE CYLINDERS
(Falcon, Schlage Small Format, Medeco KeyMark)

- 15 Top/Master Pins
- 10 Nickel Silver Bottom Pins
- Long & Short Springs
- Caps

LMDBIC

A2 INTERCHANGEABLE CORE
BEST CYLINDERS (BEST only)

- 15 Brass Top/Master Pins
- 10 Nickel Silver Bottom Pins
- BEST Springs Long
- BEST Caps

LMDKWK

Mini DUR-X Kit For:
KWIKSET CYLINDERS

- 6 Master Pins
- 2 Standard Driver Pins
- 2 Anti-Pick Driver Pins
- 6 Bottom Pins
- Cylinder Springs
- Color-coded to Industry Standards

LMDSCH

Mini DUR-X Kit For:
SCHLAGE CYLINDERS

- 8 Master Pins (Brass)
- 4 Driver Pins (Brass)
- 10 Bottom Pins (Nickel-Silver)
- Cylinder Cap Pins and Springs
- Cylinder Springs

Stocked Product

LMDOIC	A2 Interchangeable Pin Kit
LMDBIC	A2 Best Pin Kit
LMDKWK	Kwikset Pin Kit
LMDSCH	Schlage Best Pin Kit

Features: "A unique and revolutionary departure from the plastic breakable pinning kits." These very handy Mini-DUR-X Pinning Kits contain only LAB BRAND PINS for original lock manufacturer's cylinders. Made of Super-Tough polyethylene, each kit features a platform insert with a reusable protective cover to protect contents. Contains location chart and only those size pins and springs required to re-pin specific lock companies' cylinders.

LAB - *Tools*

Plug Followers

- Light weight
- Very Durable
- White Delrin®

Stocked Product

LFT000	Schlage (.500) Diameter
LFT001	Universal (.498) Diameter
LFT002	Weslock (.500) Diameter
LFT008	Kwikset (.500) Diameter
LFT005	5 Piece set includes LFT000, LFT001, LFT002, LFT003 (Corbin), LFT004 (Small Diameter)

Formed End Tweezers

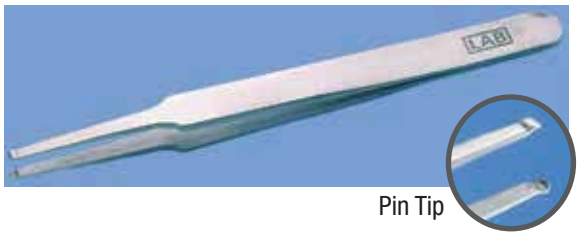

Pin Tip

- Curved Ends for Positive Grip
- Made of Stainless Steel

Stocked Product

LZT001 Tweezers

Cylinder Cap Removal Tool

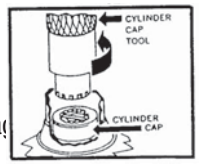

Tool to remove the cylinder caps from Schla
and Falcon cylinders.
Tool accommodates extended tailpieces for Schlage cylinders.

Stocked Product

LCR005 Cap Removal Tool

Kwikset Cylinder Removal Tool

- Used on Standard 400 Series cylinder assemblies
- Made from 0.080" thick cold rolled steel
- Yellow dichromate coated to resist corrosion

Stocked Product

CRT001 Cylinder Removal Tool

Key Gauges

5-N-1 GAUGE

LKG001

- For Kwikset, Schlage, Weiser, Weslock, Master Lock

2-N-1 GAUGE

LKGKS

- 2-N-1 Gauge for Kwikset, Schlage

Stocked Product

LKG001	5-N-1 Gauge
LKGKS	2-N-1 Gauge

LAB - *Tools*

Key Gauge

I Core Key Gauge

- A2, A3, and A4 Systems
- .20 gauge thick 304 stainless steel
- 2-3/4" x 2" size

Stocked Product

LKGIC IC Key Gauge

LAB Lube

1.0 oz.
Made of Dupont® Teflon powder.
A dry lubricant that will not "cake-up" like graphite.

Stocked Product

LLT001 LAB Lube

Mini Pick Set

- 10 Piece Set
- 2-1/4" x 5"
- Contains: LPT002 (Shallow Hook), LPT003 (Deep Hook) LPT004 (Shallow Hook), LPT005 (Medium Rake) LPT007 (Small Rake), LTTM01 Turning Tool (.075) LTTM02 Turning Tool (.093) , LTTM03 Turning Tool (.125), LTT005 Auto Disc Turning Tool

Stocked Product

LPT015 Mini Pick Set

LCN - *Closers*

1250 - Series **Closers**

The 1250 Series cast aluminum closer is designed for low-frequency and low abusive traffic areas. This cast aluminum closer is ideal for aluminum storefronts, interior offices and many other applications. Combining dependable operation, low maintenance and a patented stylish look - with or without the optional slim line cover. And with the most common hole pattern in the industry, the 1250 Series is the perfect choice for easy aftermarket replacement.

CLOSER MOUNTS
*HINGE (PULL) SIDE
TOP JAMB (PUSH SIDE)
PARALLEL ARM (PUSH SIDE)

Features:

- Tested and certified under ANSI Standard A156.4, grade one.
- Cast Aluminum
- All weather fluid
- Non-handed
- Peel-n-stick templates for fast and accurate installation
- UL and cUL listed
- Adjustable spring size 1-5

- Standard 1250 Series closer shipped with tri-pack arms: regular, parallel and top jamb, universal screw pack: self-reaming and tapping: 1-3/4" thru bolts; machine screws and wood screws.
- Non-sized (1-5) cylinder is adjustable for interior doors to 4'6" and exterior doors to 3'6".
- Closer mounts hinge side, top jamb and parallel arm on either right or left swinging doors.
- Mounts to most common commercial footprint (3/4" x 9-1/16").
- Closer meets ADA requirements.
- Optional SRI primer for installations in corrosive conditions. (Special order only)
- Optional slim line plastic cover. (Special order only)

Stocked Product

1250	Aluminum, Dark Bronze

LCN - *Closers*

1260 - Series **Closers**

The LCN 1260 Series combines the best features from the previous 1070 and 1370 into a single versatile and economical cast iron closer, with dual mounting capability. The 1260 is adjustable spring sizes 1-5 and mounts to the most common commercial footprint. The 1260 also features a complete line of regular and extra duty arms, LCN's peel-n-stick installation templates, a convenient spring adjust pointer, and an optional Quick Fix™ bracket kit.

UL and cUL listed for self-closing doors without hold-open. Tested and certified under ANSI Standard A156.4, grade one.

CLOSER MOUNTS
*HINGE (PULL) SIDE
TOP JAMB (PUSH SIDE)
PARALLEL ARM (PUSH SIDE)

Features:

- Standard 1260 series closer shipped with regular arm, a shaft cover, and self reaming and tapping screws.
- Non-sized (1-5) cylinder is adjustable for interior doors to 4'6" and exterior doors to 3'6".
- Closer mounts hinge side, top jamb and parallel arm on either right or left swinging doors.
- Mounts to most common commercial footprint (3/4" x 9 1/16").
- Closer meets ADA requirements.
- Optional Quick Fix™ bracket kit.
- Optional SRI primer for installations in corrosive conditions.
- Optional Slim Line cover. (Special Order Only)

Stocked Product:
1261 RW/PA: AL (689) & DRK BRZ (695)

LCN - *Closers*

1450 - Series **Closers**

The 1450 Series cast aluminum closer was specially designed to deliver consistent, dependable, long-term performance in frequently-used, low-abusive traffic areas. The patented design, featuring the industry's most common hole pattern, is an excellent choice for a range of applications - from aftermarket replacement to aluminum store fronts, to new construction projects - anywhere quality, reliability and value are important.

CLOSER MOUNTS
*HINGE (PULL) SIDE
TOP JAMB (PUSH SIDE)
PARALLEL ARM (PUSH SIDE)

Features:

- Cast Aluminum
- All weather fluid
- Non-handed
- Peel-n-stick templates for fast and accurate installation
- UL and cUL listed
- Adjustable spring size 1-6
- Full plastic cover included

- Standard 1450 series closer shipped with tri-pack arms; regular, parallel and top jamb arms, universal screw pack: self-reaming and tapping; 1 3/4" thru bolts; machine screws and wood screws.
- Non-sized (1-6) cylinder is adjustable for interior doors to 5'0" and exterior doors to 4'0".
- Closer mounts hinge side, top jamb and parallel arm on either right or left swinging doors.
- Closer meets ADA requirements.
- Optional plated finish full metal cover, arm and fasteners. (Special order only)
- Tested and certified under ANSI Standard A156.4, grade one.
- Optional SRI primer for installations in corrosive conditions. (Special order only)

Stocked Product

1450	Aluminum, Dark Bronze

LCN - *Closers*

1461-Series Closers

The 1460 SUPER STOCK is a double lever arm, slim line closer designed for use on narrow head frames and top rails. A wide choice of options, mounting accessories and ease of installation offers maximum versatility.

UL and ULC listed for self-closing doors without hold-open. Tested and certified under ANSI Standard A156.4, grade one.

Features:

- Standard 1460 series closer shipped with regular arm (non-hold-open), a slim line non-metallic cover, and thru bolts with machine screw packs.
- Non-sized cylinders adjustable for interior doors to 5'0" and exterior doors to 4'0"
- Closer mounts hinge side, top jamb, and parallel arm on either right or left swinging doors. All closers are stocked tri pack with parallel arm bracket.
- Closers meet ADA requirement.

Stocked Product

- Hold open (H) Non handed arm mounts hinge side or top jamb
- H CUSH -Non handed parallel arm features solid forged steel main arm and forearm with stop in soffit shoe
- DEL -Delay closing from 110° to 65° or 160° to 75° depending on templating. Delay time up to 1 minute
- EDA -Extra duty arm non handed parallel arm features forged solid steel main and forearm for potentially abusive installations
- **Finishes:** Aluminum and Dark Bronze

1460-18

Drop plate used with standard slim line cover

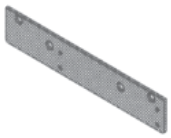

Drop plate used with standard slim line cover

- Required for hinge side mount where top rail is less than 2-1/2"
- Required for top jamb mount where head frame is less than 1-3/4"
- Plate requires minimum 1-1/2" top rail or 1-1/4" head frame

1460-18PA

Drop plate used with standard slim line cover

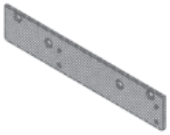

Drop plate used with standard slim line cover

- Required for parallel arm mounting where top rail is less that 4-3/8"
- Plate requires 1-3/4" minimum top rail.

1460-30

Provides anchor for fitting screw used with CUSH arms where reveal is less than 3-1/16"

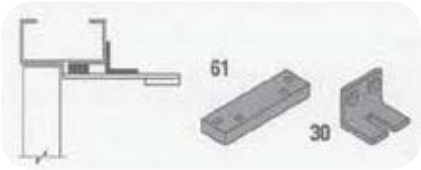

1460-61

Lowers parallel arm shoe to clear 1/2"

1460-62A

Optional shoe replaces -62PA for parallel arm mounting of regular arm with Glynn-Johnson overhead holder stop. Special templating required.

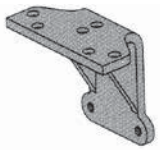

Stocked Product

1460-18	Aluminum
1460-18PA	Aluminum
1460-30	Aluminum
1460-61	Aluminum
1460-62A	Aluminum

LCN - *Closers*

2030-Series **Closers**

The concealed 2030 Series PACER ® is a heavy duty closer designed to fit in a narrow, minimum 1 3/4" aluminum transom. The single lever arm and roller assembly provide smooth, quiet door control and the choice of finishes and track functions meet virtually all architectural requirements. The 2030 Series is UL & cUL listed for self-closing doors, without hold-open. Tested and certified under ANSI Standard A156.4, grade 1.

Features:

- Standard 2030 series closer shipped with standard arm, standard track, mounting/finish plate, and wood and machine screw pack.
- Sized cylinders for interior doors to 4'6" and exterior doors to 3'6".
- Handed for right or left swinging doors.
- Aluminum frame requires minimum 1 3/4" (44 mm) x 4" (102 mm) tube.
- Closer 2031 to meet ADA requirements.
- Standard or optional custom powder coat finish.
- Optional plated finish on arm, fasteners and finish plate.

Stocked Product

Part#	*Description*	*Finish*
2031	LH (ADA)	AL
2031	RH (ADA)	AL
2033	LH Size 3	AL
2033	RH Size 3	AL
2034	LH Size 4	AL
2034	RH Size 4	AL

LCN - *Closers*

4040XP-Series Closers

The 4040XP is a heavy duty, double lever arm closer designed for institutional and other high traffic applications. The wide choice of options, installation accessories and ease of installation offers maximum versatility. UL and ULC listed for self-closing doors without hold-open. Tested and certified under ANSI Standard A156.4, grade one.

Features:

- Standard 4040XP series closer shipped with regular arm (non-hold-open), standard non-metallic cover, and thru bolts with machine screw packs.
- Non-sized cylinders adjustable for interior doors to 5'0" and exterior doors to 4'0"
- Closer mounts hinge side, top jamb, and parallel arm on either right or left swinging doors. All closers are stocked tri pack with parallel arm bracket.
- Closers are packed 4 per case, packed with thru-bolt (TB) and self reaming, tapping screws (SRT)

Stocked Product:

- CUSH option - parallel arm feature with solid forged steel main arm and forearm with stop in soffit shoe. - AL, DB
- HCUSH option - hold open function with templated stop / hold open point. Handle in arm controls hold open function. - AL
- Extra Duty (EDA) option - parallel arm features forged, solid steel main arm and forearm for high frequency doors. - AL, DURO
- Delayed Action (DA) - delays closing from 120° to 80°. Delay time adjustable up to 1 minute. - AL
- Hold Open - arm mounts pull side or top jamb with shallow reveal hold open adjustable shoe. - AL, DB
- SCUSH: Optional non handed parallel arm for abusive applications, features solid forged steel main arm and forearm with spring loaded stop in the soffit shoe. Handle in arm controls hold open function. - AL
- SH CUSH: Optional non handed parallel arm for abusive applications; features solid forged steel main arm and forearm with spring loaded stop in the soffit shoe. Hand controls hold-open function. - AL

4040XP - Series Accessories

PLATE 4040XP-18

Required for hinge side mount where top rail is less than 3-3/4". Plate requires minimum 2" top rail.

Stocked Product
Finish: Aluminum, Dark Bronze

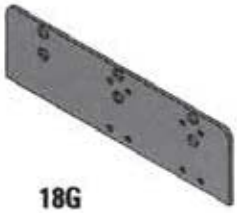

PLATE 4040XP-18G

Locates top jamb mounted closer flush with top of head frame face in flush ceiling condition. Plates requires 1-3/4" minimum head frame.

Stocked Product
Finish: Aluminum, Dark Bronze

PLATE 4040XP-18PA

Required for parallel arm mounting where top rail is less than 5-1/2" (140mm), measured from the stop. Plate requires 2" (51mm) minimum top rail.

Stocked Product
Finish: Aluminum, Dark Bronze

PLATE 4040XP-18TJ

Centers top jamb mounted closer vertically on head frame face in flush ceiling condition. Plate requires 1-3/4" minimum head frame.

Stocked Product
Finish: Aluminum, Dark Bronze

LCN - *Closers*

PA SHOE 4040-62

Finish: Aluminum

Thru Bolt Only

For 1-3/4" door (less screw)

Finish: Aluminum, Dark Bronze

ADAFG

Force Gauge

4010 -Series **Closers**

Features:

- Regular arm with non metallic cover
- Non sized cylinder adjustable
- Hinge size mounting
- Designed for high traffic applications

Specifications

- Meets ANSI A156.4 Grade 1
- Handed
- 10 year warranty

Stocked Product:

Item #	Handing	Finish
4011	LH, RH	Aluminum

4110-Series **Closers**

The 4110 SMOOTHEE is a heavy duty, parallel arm closer designed for institutional and other high traffic applications. This handed closer is specifically designed for parallel arm mounting and has passed 10,000,000 cycles in independent testing. The wide choice of options, installation accessories and ease of installation offers maximum versatility.

The 4110 Series is UL and ULC listed for self-closing doors without hold-open.
Tested and certified under ANSI Standard A156.4, grade one.

Features:

- Standard 4110 series closer shipped with non-hold-open Extra Duty (EDA) arm, standard non-metallic cover, 4110-201 FIFTH SCREW SPACER and thru bolts with machine screw packs.
- Sized cylinders adjustable for interior doors to 5'0" and exterior door to 4'0".
- Non-sized cylinder adjustable for interior doors to 4'6" and exterior doors to 3'6".
- Closer mounts parallel arm, specify right or left swinging door.
- 4111 cylinder meets ADA requirements.
- Stocked Aluminum, Dark Bronze

Stocked Product:

Item #	Handing	Finish
4111	LH, RH	Aluminum, Dark Bronze

4110 - Series **Accessories**

PLATE, 4110-18

Required for push side mount where top rail is less than 5-1/8", measured from the stop. Plate requires minimum 2" minimum top rail. Plate also used with Cush Arm installation.

Stocked Product
Finish: Aluminum, Dark Bronze

LCN - *Closers*

4630 -Series **Closers**

TOP JAMB (PULL SIDE) MOUNTING

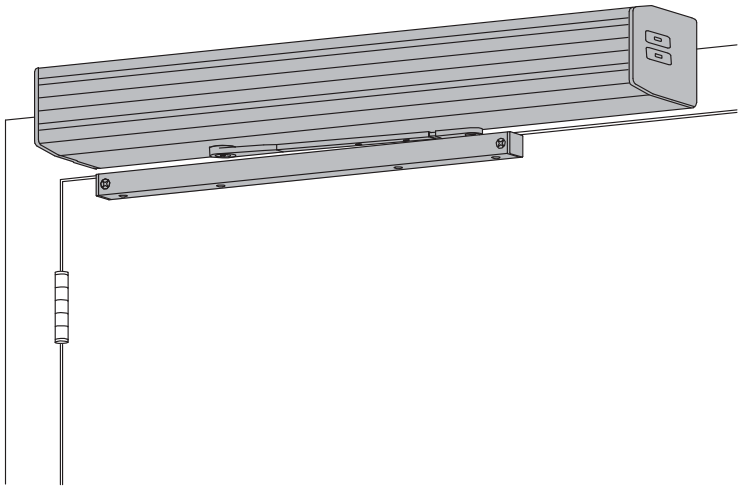

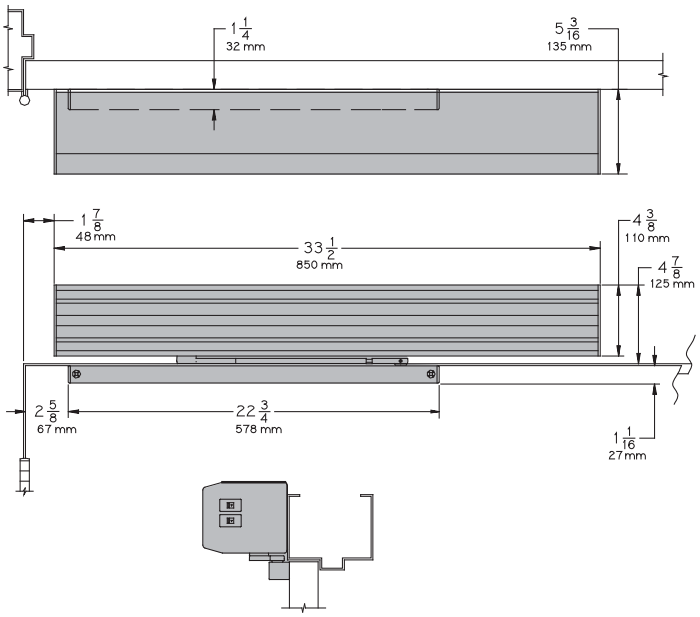

Features:

- Electrically powered low-energy power operator.
- Designed primarily for manual opening applications that occasionally required automatic opening.
- Standard, top jamb (pull side) mounted 4630 series closer shipped with single lever (standard) arm, metal cover, standard track, and wood and machine screw pack.
- Meets ADA requirements (power mode).
- Non-sized cylinders for interior doors to 4'0" and exterior doors to 3'0". Non-handed for either right or left swinging door.
- 4630 has easily accessible switches to provide on/off and continuous hold open functions. 4630CS provides concealed on/off power switch. Control module provides all timing and sequential door functions, electric strike controls and adjustments for opening speed and force.
- Standard or optional custom powder coated finish, end caps are black. Optional plated finish on cover, arm, and fasteners.

Specifications

- 4630 Series is UL and cUL listed with standard arm for self-closing doors and meets the provisions of ANSI Standards A117.1, A156.19, and the Americans with Disabilities Act.

Stocked Product

4631 Aluminum

LCN - *Closers*

4640 -Series **Closers**

TOP JAMB (PUSH SIDE) MOUNTING

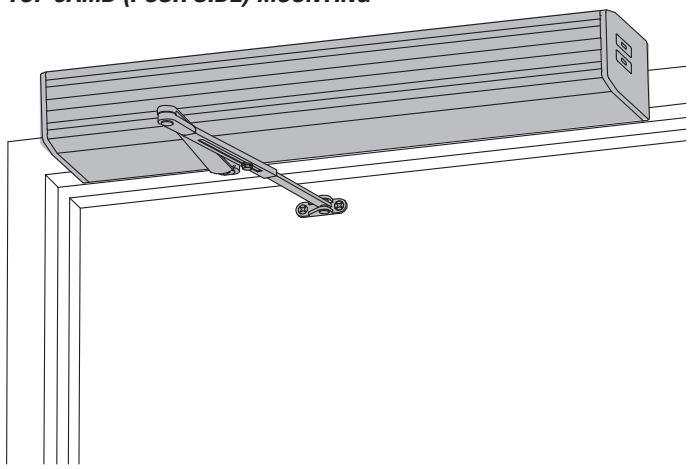

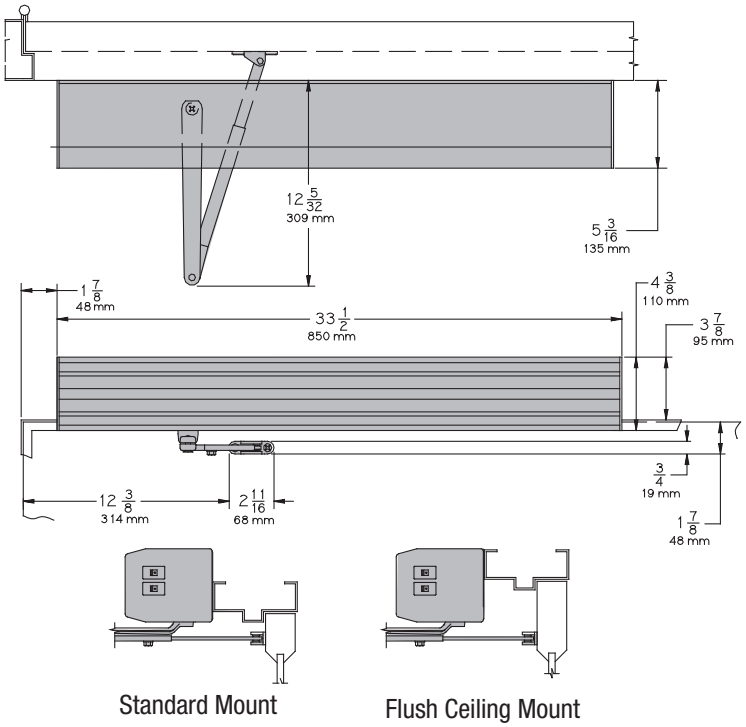

Standard Mount

Flush Ceiling Mount

Features:

- Electrically powered low-energy power operator.
- Designed primarily for manual opening applications that occasionally required automatic opening.
- Standard, top jamb (push side) mounted 4640 series closer shipped with regular arm, metal cover, and wood and machine screw pack. Meets ADA, requirements (power mode).
- Non-sized cylinders for interior doors to 4'6" and exterior doors to 3'6". Non-handed for either right or left swinging door.
- 4640 has easily accessible switches to provide on/off and continuous hold open functions. Control module provides all timing and sequential door functions, electric strike controls and adjustments for opening speed and force.

Specifications

- The 4640 Series is UL and cUL listed with regular arm for self-closing doors and meets the provisions of ANSI Standards A117.1, A156.19, and the Americans with Disabilities Act.

Stocked Product

4642 Aluminum

LCN - *SEM 7800 Series*

7850 - Series Magnets

Standard profile recessed wall mount.
2" (51 mm) x4" (102 rnm) x 1 1/2" (38mm).
Outlet box not included.
Also available 1980 plastic housing.

SEM 7850

Total Projection = 3 5/8" (92 mm)

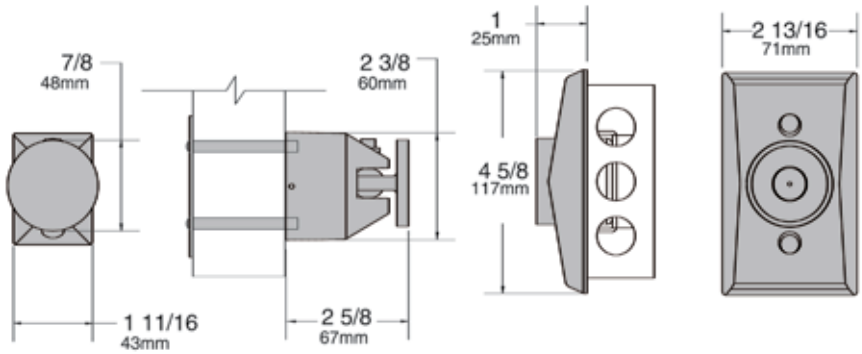

ELECTRICAL DATA

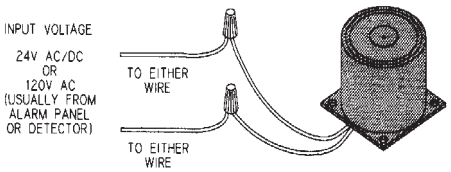

24V AC/DC or 120V AC input.
Heavy duty electromqgnet is protected against transients and voltage surges up to 600 volts.
24V AC/DC norninal
+10%- 15% @ .110 amp. maximum.
120V AC nominal
+10% -15% @ .020 amp. maximum.
An SED transformer (4040SED-321 0) can be used to reduce line voltage where desired. It will power up to three magnets.
Primary 120V AC 50-60 Hz
Secondary 24V AC @ .400 amp. maximum.

SEM 7810 - Extensions

SEM 7810E050 1/2”

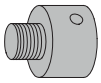

SEM 7810E075 3/4”

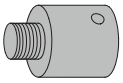

SEM 7810E100 1”

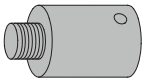

SEM 7810-514 - Assembly Kit

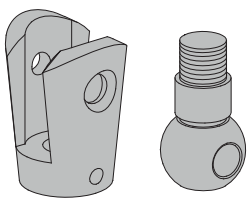

Assembly Kit is required for each door needing extensions. Kit includes coupler link and ball pivot (alone serves as a 1-1/2” extension).

Stocked Product

SEM 7850	689, 695
SEM 7810E050 1/2” extension	689, 695
SEM 7810E075 3/4” extension	689, 695
SEM 7810E100 1” extension	689, 695
SEM 7810-514 assembly	689, 695

Lucky Line

4-Key Tag Rack

- Rugged plastic rack keeps key tags organized.
- Supplied with four tags and adhesive strips to mount anywhere.
- Key tags come with jump ring to help keys lie flat.

Size: 5”W x 2-1/2”L x 1/2”H

Stocked Product
60540 - 1 per Card

6-Key Tag Rack

- Scalloped design adds style to a popular item.
- Organize keys for home, office, cars, school, family.
- Store keys in one convenient location.
- Easy to install - includes adhesive tape for mounting.
- No. 60560 supplied in white with six assorted colors with No. 605 tags

Size: 8”W x 2-1/2”L x 1/2”H

Stocked Product
60560 - 1 per Card

8-Key Tag Rack

- Rugged plastic rack keeps key tags organized.
- Mount with adhesive strips or screws (included).
- No. 605 key tags come with jump ring to help keys lie flat.

Size: 10”W x 2-1/2”L x 1/2”H

Stocked Product
60580 - 1 per Card

Key Tag with Ring

- Flexible, colored plastic tag ideal for multi-key systems.
- Paper insert slides out easily.
- Clear plastic insert protects writing from the elements.

Insert Size: 5/8” x 1-3/8”
Tag Size: 7/8” x 2” (with 3/4” overlapping ring)

Stocked Product
16900 - 1 Box of 200

Lucky Line

Key Tag with Split Ring

- Open/close flap over paper insert for identification with keys attached.
- Durable tag for keys. Made of tough polypropylene.
- Paper insert comes out for easy writing.
- No. 605 has 7/8" tempered steel split key ring, and additional jump ring to help tag lie flat.

Tag Size: 1-1/8" x 2-1/4"
Imprint Area: 1-7/8" x 7/8"

Stocked Product
60500 - 100 per Box
60502 - 2 per Card

Key Tag with Swivel Ring

- Flexible tag with metal swivel.
- Paper insert slides out easily.
- Clear plastic insert protects writing from the elements.

Insert Size: 5/8" x 1-3/8"
Tag Size: 7/8" x 2" (with 3/4" overlapping ring and swivel)

Stocked Product
16800 - 200 per Box
16802 - 2 per Card

Key Tag

- Durable, transparent tag for key or luggage.
- Paper insert slides out easily.
- Heavy-duty 4-1/2" nickel-plated steel ball chain.

Size: 15/16" x 2-1/4"

Stocked Product
10100 - 100 per Box
10102 - 2 per Card

DOORS & SPECIALTIES CO.
COMMERCIAL DOORS • FRAMES • HARDWARE

Lucky Line

Key Identifiers

164
Small: 13/16”

167
Medium: 1”

166
Large: 1-3/16”

- Available in small, medium and large sizes.
- Keeps similar keys separated by color.
- Will stretch to fit over most standard key heads for easy key identification.
- Rubber-like vinyl resists cracking and color fading. Superior material; pliable, but won’t break.
- Not recommended for ignition keys.

Stocked Product

16400	Small	100 per Box	Assorted
16404	Small	4 per Card	Assorted
16700	Medium	200 per Box	Assorted
16704	Medium	4 per Card	Assorted
16706	Medium	4 per Card	Neon
16603	Large	3 per Card	Assorted
16615	Large	150 per Box	Assorted

Solid Brass Tags

- Solid brass tags for heavy-duty applications.
- Can be stamped or engraved by you.
- Perfect for pet tags, long term site I.D., or industrial use.
- .040” thick.

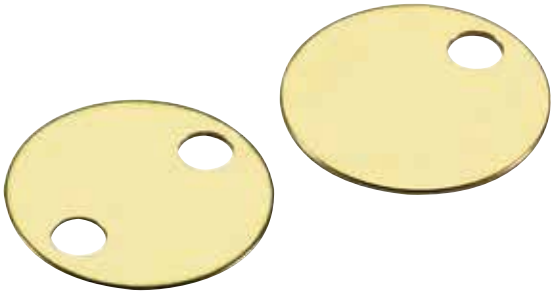

Stocked Product

26006	3/4”tag	100 per Box
26010	1”tag	100 per Box
26011	1-1/8” tag	100 per Box
26012	1-1/4”tag	100 per Box
26013	1-3/8”tag	100 per Box
26017	1-7/8”tag	100 per Box

Key Cap

- Keeps similar keys separated by color.
- Provides a firm grip on key head.
- Will stretch to fit over most standard key heads for easy key ID.
- Rubber-like vinyl resists tearing and color fading. Superior material; pliable, but won’t break.

Size: 1” x 3/4”

Stocked Product

16500	200 per Box	Assorted
16504	4 per Card	Assorted
16506	4 per Card	Neon
16507	200 per Box	Neon
16525	200 per Small Jar	Assorted
16526	200 per Small Jar	Neon

House Key Caps

- Makes a house key easy to find and easy to grip.
- Unique design inside cap accommodates Schlage, Kwikset and Weiser key heads.
- Vinyl resists tearing and color fading.
- Superior material; pliable, but won’t break.

Size: 1-1/4” x 1”

Stocked Product

16202	2 per card	Assorted

Lucky Line

Give Away Ring

- Ideal as giveaway with cut keys.
- Made of zinc-plated steel spring wire with a 1/4 turn overlap.

Stocked Product

75600	3/4”	1,000 per Display Box
75900	1”	1,000 per Display Box

Pull Apart Ring

- Sturdy steel key ring holds numerous keys, can hang on hook for storage.
- Tension closure sleeve permits ring to lock together.
- To open, pull ends up and apart.
- Ideal for extra keys, or temporary storage of customer’s key rings.
- Made of 1/8” diameter cadmium-plated steel.

Stocked Product

74305	3-1/2”	5 per Pkg.

Binder Ring

- Holds multiple documents together.
- Made of nickel-plated steel.
- Available in 1” and 2”

Stocked Product

24302	1”	2 per Card
24602	2”	2 per Card

Nickel-Plated Tempered Steel Rings

- Key rings hold multiple keys securely.
- Resilient tempered steel won’t lose shape even after repeated use.
- Made of nickel-plated tempered steel.

Stocked Product

76402	1”	2 per Card
76602	1-1/4”	2 per Card
77001	2”	1 per Card
79101	3”	1 per Card
76000	1/2”	100 per Box
76100	5/8”	100 per Box
76200	3/4”	100 per Box
76300	7/8”	100 per Box
76400	1”	100 per Box
76500	1-1/8”	100 per Box
76600	1-1/4”	100 per Box
76700	1-3/8”	100 per Box
76800	1-1/2”	50 per Box
76900	1-3/4”	50 per Box
77000	2”	50 per Box
79100	3”	25 per Box

Twisty® Key Ring

- Can be crimped for permanent closure.
- Strong, flexible, corrosion-resistant aircraft cable key ring.
- Unique patented locking mechanism assures keys stay put.
- Use as key ring or binder ring to hold products or documents together.
- Available in these finishes: brass-plated stainless steel, nylon coated cable

Stocked Product

81101	5”	1 per Card	Nylon Coated
81124	5”	24 per Card	Nylon Coated
82901	9”	1 per Card	Brass Plated

Lucky Line

Flex-o-loc®

- Strong, flexible, corrosion-resistant aircraft cable key ring.
- Unique patented ball-knob and socket closure locks and unlocks easily.
- Use as key ring or binder ring to hold products or documents together.

Standard Size: 5" length

Stocked Product

71101	5"	1 per Card	Nylon Coated Cable	Assorted

C-Clip

- Spring-loaded gate makes it easy to open and close with one hand.
- Clips to belt or purse.
- Made of anodized aluminum.
- No. 460 has a 7/8" nickel-plated tempered split key ring.
- No. 461 has a 1-1/8" ring.
- Angled edge for easy grab on belt loop.
- Not made for climbing.

Sizes: 460 - 2-3/8"
461 - 3-1/8" (without split ring)

Stocked Product

46001	1 per Card	Small	Assorted
46101	1 per Card	Large	Assorted

Turn Sleeve & Spring Sleeve

- Compact key ring with screw or spring-loaded closures.
- No. 702: Unscrew to open, screw to close.
- No. 704: Pull to open, release to close.

702 Turn Sleeve

704 Spring Sleeve

Stocked Product

70201 1 per Card
70401 1 per Card

Size: 3/4" x 2"

Plastic Key Clip

- Strong plastic key clip snaps on and off belt loop, book bag or purse strap.
- Bottom swivel rotates for added durability, helps keys lie flat.
- Supplied in assorted colors with 7/8" nickel-plated tempered steel split ring.

Size: 3-1/2" (without split ring)

Stocked Product

41501	1 per Card	Assorted

Anodized Oval Key Ring

- Sleek, colored aluminum key ring keeps keys easily in pocket or purse.
- Brass screw closure makes taking keys on and off simple and fast.

Size: 2-3/8" long

Stocked Product

73701 1 per Card Assorted

Wrist Coil

- Superior quality coil always springs back and never loses its shape.
- Fits comfortably over wrist for work, exercise, water sports, etc.
- Supplied with 7/8" nickel-plated tempered steel split ring.

Size: 2" dia. (stretches to 12" dia)

Stocked Product

41001	1 per Card	Assorted
41006	1 per Card	Neon
41027	50 per Medium Jar	Assorted

Coil with Trigger Snap

- Superior quality coil always springs back and never loses its shape.
- Small nickel-plated trigger snap keeps keys on belt loop, book bag or purse strap.
- Clip trigger snap to key ring to create a convenient wrist coil for carrying keys.

Size: 4" (stretches to 24")

Stocked Product

41301	1 per Card	Assorted

Lucky Line

Designer Key Coil

- New and improved!
- Excellent for use with magnetic cards in restaurants or casinos, or for supervisors with multiple keys.
- Key Coil with handy matching plastic key clip attached.
- Supplied with two 7/8" split rings.

Stocked Product

41601	1 per Card	Assorted	Size: 10" (stretches to 48")

Lanyard

- Fits around neck comfortably.
- Perfect to attach whistle or for keeping house keys secure.
- Metal swivel allows clip to lie flat against chest.
- Made of strong woven nylon.

Stocked Product

41401	1 per Card	Assorted	Size: 21-1/2" length

Ball Chain

- Spools of ball chain and couplings

Stocked Product

31700	#6	1/8" Diameter	Nickel-Plated Steel	100 ft.
31900	#6	Coupling	Nickel-Plated Brass	100 per Pkg.

Mity-Mite® Key Ring

- Flexible, flat link stainless steel.
- Collapses to fit easily in a pocket.
- Measures 5-3/8" in length.

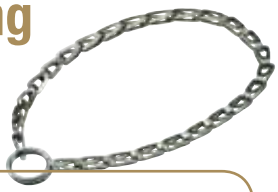

Stocked Product

43201	1 per Card	Size: 5-3/8" long

18" Pocket Chain w/ Trigger Snap

- Trigger snap secures chain to belt loop or purse strap.
- Tough nickel finish steel link chain.
- 1-1/8" nickel-plated tempered steel split key ring holds keys or can attach to a wallet for security.

Stocked Product

40101	1 per Card	Size: 18-1/4" (overall length)

6-1/2" Pocket Chain

- Use with Secure-A-Key® or Belt Hook to keep keys safely inside pocket.
- Supplied with two nickel-plated tempered steel split key rings: 3/4" and 1-1/8".

Stocked Product

40301	1 per Card	Size: 6-1/2" (overall length)

Key Bak®

- High-quality key reel with 24" retractable pull of flat, linked steel chain.
- "The Original" Key Bak®, since 1949.
- Clip on belt or slip through belt for added security.
- Extremely durable. Ideal for security personnel, custodial staff and those who use keys frequently.
- Available in textured chrome finish or black finish.
- Includes a Lifetime Service Policy
- No. 433 & No. 434 models fit 2" width belt.
- No. 435 & No. 436 models have a 2" long clip.

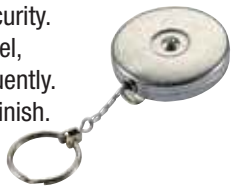

Size: 2-1/2" diameter

Stocked Product

43301	1 per Card	Chrome	Slip Through
43401	1 per Card	Black	Slip Through
43501	1 per Card	Chrome	Clip On
43601	1 per Card	Black	Clip On

Super 48 Key Bak®

- Very high-quality key reel with 48" retractable pull.
- Kevlar® cord provides strength and a smooth draw.
- Clip on belt only.
- Unique ball-and-socket locking mechanism holds multiple keys. Carry more keys, small tools or phone.
- Heavy-duty polycarbonate case will not rust.

Size: 2-1/2" diameter

Stocked Product

43651	1 per Card	Black	

Lucky Line

Mini Bak®

- Durable, high-impact plastic case and 3-strand nylon cord with a badge-holder or split ring.
- 3 ft. extension.
- Holds up to 2 oz.
- Model 428 comes with badge holder.

Stocked Product
42801 1 per Card Assorted

Size: 1" diameter

Key Safe

- Simple design makes keys easily accessible.
- Slips through belt so it won't pull off.
- 1-1/8" nickel-plated tempered steel split ring snaps in and out with ease.
- Fits 2" width belt.
- Made of nickel-plated steel.

Stocked Product
47601 1 per Card Nickel Plated

Size: 2" (without split ring)

Key Pal

- Can be worn right side up or upside down for additional key security.
- Slips through belt so it won't pull off.
- Made of powder-coated steel.
- 1-1/8" nickel-plated tempered steel split ring snaps in and out with ease.
- Fits 2" width belt.

Stocked Product
47901 1 per Card

Size: 2-1/2" (without split ring)

Secure-A-Key® Clip On

- "The Original". We take special pride in the construction of this key carrier.
- Spring stainless steel won't rust, adds strength so product stays securely clipped to a belt.
- Patented double-locking arm prevents accidental key loss.
- Quickly clips onto belt, holds up under heavy use.
- Supplied with 1-1/8" nickel-plated tempered steel split ring.
- Fits 1-3/4" width belt.

Stocked Product
40401 1 per Card

Size: 2" (without split ring)

Secure-A-Key® Slip On

- "The Original". We take special pride in the construction of this key carrier.
- Spring stainless steel won't rust.
- Patented double-locking arm prevents accidental key loss.
- Preferred by law enforcement, slides through belt and holds up under heavy use.
- Supplied with 1-1/8" nickel-plated tempered steel split ring.
- Fits 1-3/4" width belt.

Stocked Product
40501 1 per Card

Size: 2" (without split ring)

Belt Hook

- Slips easily over belt, holds firmly.
- Made of nickel-plated steel.
- 1-1/8" nickel-plated tempered steel split ring snaps in and out with ease.

Stocked Product
40601 1 per Card

Size: 2-7/8" (without split ring)

Lucky Line

Quick Release

- Pull-apart key holder makes it easy to leave keys with valets, family, friends, etc.
- Made of tough nickel-plated brass with two 7/8" nickel-plated tempered steel split rings.
- No. 706 is available in assorted colors.
- No. 707 is available in nickel.

Stocked Product

70601	1 per Card	Assorted
70701	1 per Card	Nickel

Size: 3" (overall length)

3-Way Pull Apart

- Pull-apart key holder makes it easy to leave keys with valets, family, friends, etc.
- Additional ring helps to organize keys into three groups.
- Supplied with three 7/8" nickel-plated tempered steel split key rings.
- No. 715 supplied in bright nickel-plated brass.
- No. 717 supplied with a steel body and red and blue anodized aluminum ends.

Stocked Product

71501	1 per Card	Nickel-plated brass
71701	1 per Card	Assorted

Size: 3" (overall length)

Trigger Snap

- Strong trigger snap opens wide to attach securely to belt loop, purse or other straps.
- Bottom loop rotates so keys lie flat.
- Solid brass trigger snap supplied with 1" brass split ring.
- Nickel-plated zinc trigger snap supplied with 1-1/8" nickel-plated tempered steel split ring.

Stocked Product

44001	1 per Card	Solid brass
44101	1 per Card	Nickel-plated zinc

Sizes: (without split ring): 2-1/2" (zinc), 2-5/8" (brass)

Bolt Snaps

- Strong nickel-plated zinc and solid brass bolt snaps. Snaps easily to belt loop, book bag or purse strap.
- Bottom loop rotates so keys lie flat.

Stocked Product

44501	1 per Card	Small with 7/8" ring
45101	1 per Card	with 1-1/8" ring

Sizes (without split ring)
445: 2-1/8" 451: 3-1/8"

Heavy-Duty Boat Snap

- Large, heavy-duty boat snap attaches easily to belt loop or purse strap.
- Bottom loop rotates so keys lie flat.
- Spring-loaded gate opens with light pressure.
- Made of nickel-plated zinc, comes with 1-1/2" nickel-plated tempered steel split ring.

Stocked Product

44701	1 per Card

Size: 3-1/4" (without split ring)

Small Trigger Snap

- Smaller nickel-plated zinc trigger snap keeps keys accessible.
- Clips to belt loop or purse hardware.
- Made of nickel-plated zinc.
- 7/8" nickel-plated tempered steel split ring.

Stocked Product

44301	1 per Card

Size: 1-1/2" (without split ring)

Heavy-Duty Bolt Snap

- Large solid brass bolt snap.
- Bottom loop rotates so keys lie flat.
- Supplied with 1" solid brass split ring.

Stocked Product

44801	1 per Card

Size: 3-1/8" (without split ring)

Lucky Line

Rock Key Hider

- Use in gardens next to house or garage.
- Slot in bottom of rock holds spare keys.
- Large enough to accommodate larger keys.
- Unique swivel rotating plastic cover holds key securely.
- Sturdy molded plastic resists damage in all weather conditions.

Size: 4" (overall length)

Stocked Product

90601	1 per Card

Sprinkler Key Hider™ (patent pending)

- This novel and unique key hider looks like a regular sprinkler head.
- Unscrew to open and close.
- Tough water-tight plastic case; push it into the dirt around shrubs or walkways.
- Holds multiple keys.
- Keeps spare keys safe and never get locked out again!

Size: 2" dia. x 3-3/4" H

Stocked Product

91901	1 per Card
91961	Display Box/6

Large & Extra Large
Magnetic Key Hider

- Large key hider is made of rugged black plastic and holds two large keys.
- Extra Large key hider is made of rugged black black plastic and holds large rubber-headed keys.
- Will not rust.
- 2 heavy-duty, superior magnets hold to any steel surface.
- Ideal for use on all vehicles, or any magnetic surface where you want to hide a key for emergencies.

910 Size:
3" x 1-7/8" x 5/8"
912 Size:
3-7/8" x 2-1/8" x 5/8"

Stocked Product

91001	1 per Card	Large
91012	12 per Display Box	Large
91200	6 per Display Box	Extra Large
91201	1 per Card	Extra Large

Plastic Coin Holder

- Coin holder doubles as a key chain.
- Flexible plastic opens with a simple squeeze to accept coins, closes tight when released.
- Supplied with 4-1/2" nickel-plated steel ball chain.
- Made from rugged plastic.

Stocked Product

94101	1 per Card	Assorted

Size: 2" x 3"

Key Savers (patent protected)

- Designed to carry a spare office, house and/or car key to prevent lock-outs.
- Clear sleeves.
- Same size as a credit card to fit in your wallet.
- No. 916 holds two standard keys.
- No. 917 holds one large and one standard key.

Stocked Product

91701	1 per Card	1 Standard Key/1 Large Key

Pouch Key Hider

- Tear-resistant nylon pouch attaches keys or cash to non-magnetic surfaces.
- Water-resistant adhesive anchors mounting pad to any clean surface.
- Effective hook and loop system secures pouch to pad, makes pouch removal easy.

Stocked Product

91301	1 per Card	Extra Large
91401	1 per Card	Large

913 Size: 2-3/4" x 4" x 1/8"
914 Size: 2" x 4" x 1/8"

Lucky Line

LED Light

- Slim profile, easy to use.
- Sleek design won't add bulk to keys.
- LED light makes finding a keyhole in the dark easy.
- Push button style on/off.
- Batteries included.

Stocked Product
63601 1 per Card Assorted

Size: 2-1/8" length

Key Light with Replaceable Battery

- Slim-profile, easy to use.
- Replacement battery allows for continued use.
- Key fits into plastic body of key light to easily find keyhole in the dark.

Stocked Product
90801 1 per Card Assorted

Size: 2" x 1-1/4"

Graphite Lubricant

- A high-quality dry lubricant.
- Needle-nosed tube makes small applications easy.
- Use on wood, metal, plastic or rubber, wherever two surfaces rub together.
- Keep locks working smoothly when used sparingly.
- 3.25 grams

Stocked Product
95001 1 per Card

Size: 3.25 gram tube

Key Buoy

- Durable key holder floats up to 5 keys easily.
- High visibility red and white sections make it easy to find on water or snow.
- Bottom half separates to provide a watertight storage compartment for identifications, fishing license or cash.
- Made of tough plastic with a 6" nickel-plated brass ball chain that won't rust

Stocked Product
92101 1 per Card

Size: 4" long x 1-1/4" diameter
Ball Chain Length: 6"

Soft Key Float

- Soft foam key holder floats up to 5 keys easily.
- Neon colors make it highly visible and easy to find on water or snow.
- Made of vinyl-coated foam that won't break or crumble under stress.
- Includes a 6" nickel-plated brass ball chain that won't rust.

Stocked Product
92401 1 per Card Neon Orange

Size: 3-1/2" x 1-3/8" x 1"

MOEN/CSI/DONNER - Bathroom Accessories

54-5 - 5' Donner Shower Rod w/Adj Flange

Stocked Finish:
Chrome (CH) only

Contemporary

3/4" Square Bar Concealed Screw

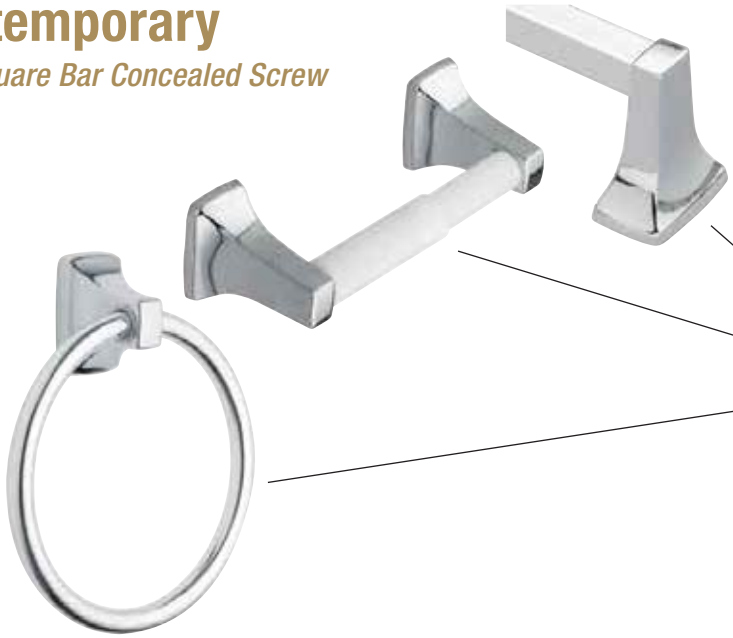

P5124	24" Bar x 3/4" Square
P5080	Paper Holder with White Roller
P5860	Towel Ring with Metal Ring

Stocked Finish:
Chrome (CH) only

Brighton Design

Concealed Screw

DISCONTINUED

Call for availability and special pricing

BP324	24" Bar x 3/4" Round
BP308	Paper Holder
BP386	Towel Ring

Stocked Finish:
Chrome (CH),
Pewter (PW) only

MOEN - Bathroom Accessories

Madison Design

Concealed Screw

BP6924	24” Bar x 3/4” Round
BP6908	Paper Holder
BP6986	Towel Ring

Stocked Finish:

Chrome (CH)

Special Order Finishes: Pewter (PW)

Brantford Design

Concealed Screw

YB2224	24” Bar x 3/4” Round
YB2208	Paper Holder
YB2286	Towel Ring

Stocked Finish:

Chrome (CH)

Special Order Finishes: Oil Rubbed Bronze (ORB)

MOEN/CSI/DONNER - Bathroom Accessories

Eva Design

YB2824	24” Bar x 3/4” Round
YB2808	Paper Holder
YB2886	Towel Ring

Stocked Finish:

Chrome (CH), Brushed Nickel (BN),

Special Order Finishes: Oil Rubbed Bronze (ORB)

Kingsley Design

Concealed Screw

YB5424	24” Bar x 3/4” Round
YB5408	Paper Holder
YB5486	Towel Ring

Stocked Finish:

Chrome (CH), Brushed Nickel (BN), Oil Rubbed Bronze (ORB)

Special Order Finishes: Antique Nickel (AN), Wrought Iron (WR)

Optional Special Order: ADA Grab Bars in Matching Design

MOEN/CSI/DONNER - Bathroom Accessories

Mason

With PRO-FIT Installation System

YB8094	24” Bar x 3/4” Round (Bar only)
YB8000	Post (Pair)
YB8099	Paper Holder
YB8000	Post (Pair)
YB8086	Towel Ring
YB8081	PRO FIT Installation System Template

Stocked Finish:

Chrome (CH), Satin Nickel (SN),
Old World Bronze (OWB)

Special Order Finishes: Brushed Chrome (BC),
Polished Brass (PB), Chrome/Polished Brass (CP)

DOORS & SPECIALTIES CO.
COMMERCIAL DOORS • FRAMES • HARDWARE

National Guard Products

Symbols/Legend

UL10B & CAN4-S104-80M CLASSIFIED, complies with NFPA 80 and NFPA 252 for application to Steel fire doors rated up to 3 Hrs., and Wood type fire doors rated up to 1 1/2 hrs. (Rating on some items vary and are noted.)

POSITIVE PRESSURE UL10C CLASSIFIED, Category 'J' listed. Complies with **IBC,** UBC7-2 (1997) NFPA 80 and NFPA 252 for application to Positive Pressure Steel fire doors rated up to 3 Hrs., and Wood type fire doors rated up to 1-1/2 Hrs. (Ratings on some items vary and are noted.)

NGP-EDGE® SEALING SYSTEM, Category 'G' listed. Required for Category B listed wood type fire doors to meet positive pressure requirements complying with **IBC,** UBC7-2 (1997) Part 1, and NFPA 252. See individual products for maximum door size and ratings.

SMOKE & DRAFT CONTROL GASKETING, Category 'H' listed**.** Complies with **IBC,** UBC7-2 1997) Part 2, UL1784 , NFPA 105 for use on **'S' labeled** Positive Pressure Steel fire doors rated up to 3 hours , and wood type fire doors rated up to 1-1/2 hrs. (Ratings on some items vary and are noted.)

ACOUSTICAL TESTED to ASTM E90 and ASTM E413, by Riverbank Acoustical Laboratories in Geneva, IL. Refer to chart on page G5 for test result data.

AIR INFILTRATION TESTED to ASTM E283, Standard Test Method for Determining Rate of Air Leakage Through Exterior Windows, Curtain Walls, and Doors.

ANSI/BHMA CERTIFIED. Certified gasketing complies with A156.22-2005, and is listed in the BHMA Certified Products Directory.

Online product listings: www.ul.com/database

ADA COMPLIANT Barrier Free Thresholds meet the requirements of the AMERICANS WITH DISABILITIES ACT Accessibility Guidelines for Buildings and Facilities (ADAAG)-September 2002, and ICC/ANSI A117.1-2003 Accessible and Usable Building and Facilities.

SLIP-RESISTANT NGP 'SIA' (Slick-it-Ain't) textured surface is available on all thresholds. Our process embeds and fuses bits of hot nickel and titanium into the surface of the threshold. This technology originally developed for use on aircraft carrier decks is very skid resistant and will not wear off.

National Guard Products

Saddle Thresholds

413 .58 lbs./ft.
413DKB .58 lbs./ft.

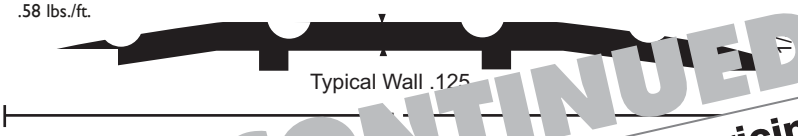

DISCONTINUED
Call for availability and special pricing

413

Stocked Product
36", 48", 72"
Aluminum, Dark Bronze

513

Stocked Product
36", 48", 72"
Aluminum, Dark Bronze

513 .74 lbs./ft.
513DKB .74 lbs./ft.

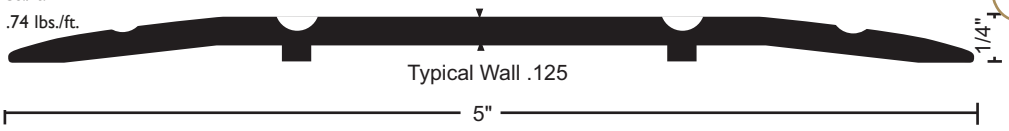

613

Stocked Product
Aluminum 36", 48", 72"
Dark Bronze 36", 48", 72

613 .88 lbs./ft.
613DKB .88 lbs./ft.

DISCONTINUED
Call for availability and special pricing

713

Stocked Product
36", 48", 72"
Aluminum, Dark Bronze

713 1.01 lbs./ft
713DKB 1.01 lbs./ft.

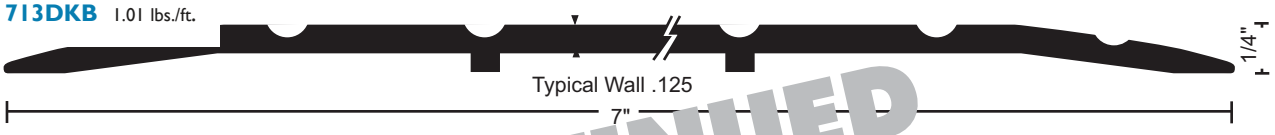

DISCONTINUED
Call for availability and special pricing

813

Stocked Product
Aluminum 36", 48", 72"
Dark Bronze 36", 48", 72

813 1.20 lbs.

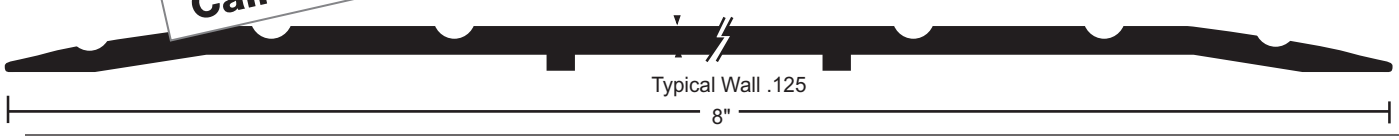

National Guard Products

Saddle Thresholds

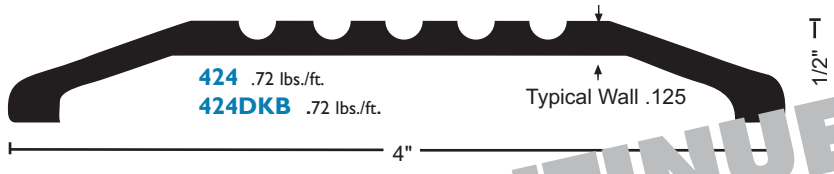

424

Stocked Product
36", 48", 72"
Aluminum, Dark Bronze

DISCONTINUED
Call for availability and special pricing

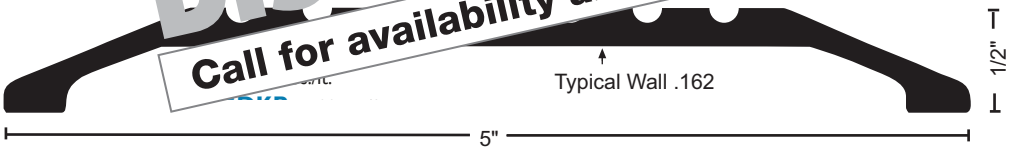

425

Stocked Product
36", 48", 72"
Aluminum, Dark Bronze

426

Stocked Product
Aluminum 36", 48", 72"
Dark Bronze 36", 48", 72"

DISCONTINUED
Call for availability and special pricing

AD Upper Seal Thresholds

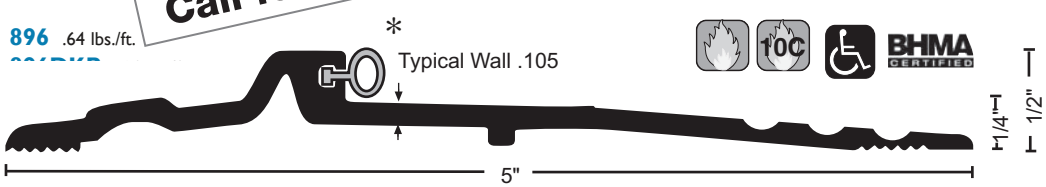

986V

Stocked Product
36", 72"
Aluminum, Dark Bronze

Half Saddle Thresholds

DISCONTINUED
Call for availability and special pricing

350

Stocked Product
36", 48"
Aluminum

National Guard Products

Drip Strip

DISCONTINUED
Call for availability and special pricing

16
Stocked Product
Aluminum 36”, 40”, 72”, 76”

Door Shoes

10C
S

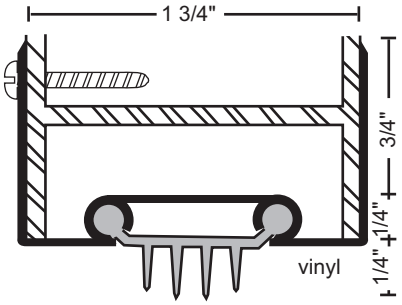

35EV
Stocked Product
36”, 48”
Aluminum, Dark Bronze

36EV
Stocked Product
36”, 48”
Aluminum, Dark Bronze

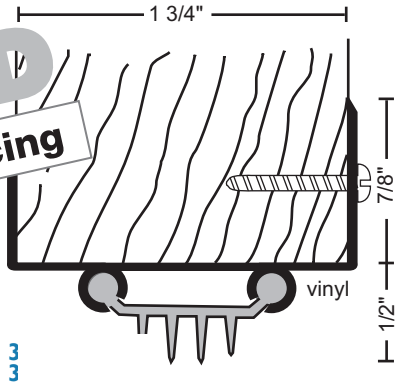

DISCONTINUED
Call for availability and special pricing

318V
Stocked Product
36”, 48”
Aluminum, Dark Bronze

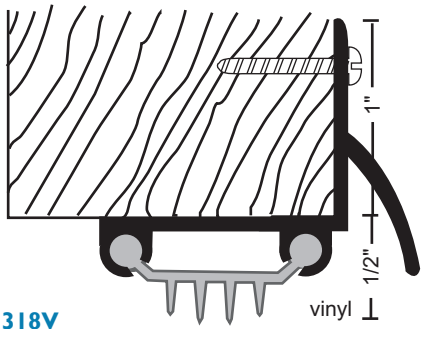

319EV
Stocked Product
36”, 48”
Aluminum, Dark Bronze

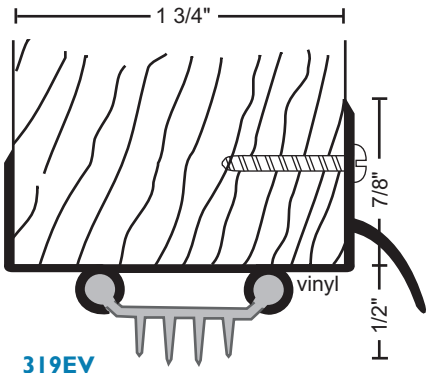

National Guard Products

Door Shoes

DISCONTINUED
Call for availability and special pricing

99V

Stocked Product
36", 48"
Aluminum, Dark Bronze

Nylon Brush Sweeps

DISCONTINUED
Call for availability and special pricing

C627

Stocked Product
36", 48"
Aluminum, Dark Bronze

Door Sweeps

DISCONTINUED
Call for availability and special pricing

200N

Stocked Product
36", 48"
Aluminum, Dark Bronze

Door Sweeps

DISCONTINUED
Call for availability and special pricing

101V

Stocked Product
36"
Aluminum

DOORS & SPECIALTIES CO.
COMMERCIAL DOORS • FRAMES • HARDWARE

National Guard Products

Automatic Door Bottoms - Surface

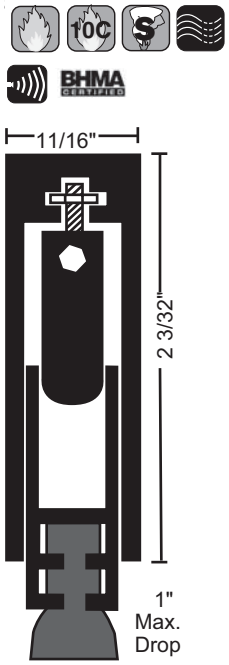

222N

Stocked Product
36",42", 48"
Aluminum, Dark Bronze

420N

Stocked Product
36", 48"
Aluminum

680

Stocked Product
36", 48"
Aluminum, Dark Bronze

DISCONTINUED
Call for availability and special pricing

Automatic Door Bottoms - Mortise

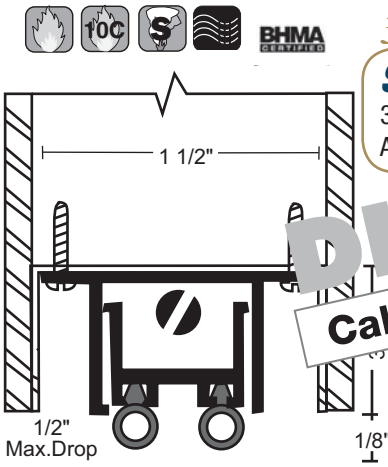

320N

Stocked Product
36", 48"
Aluminum

325N

Stocked Product
36", 48"
Aluminum

DISCONTINUED
Call for availability and special pricing

DOORS & SPECIALTIES CO.
COMMERCIAL DOORS • FRAMES • HARDWARE

National Guard Products

Silicone Perimeter Seals

DISCONTINUED
Call for availability and special pricing

156S

Stocked Product
36" x 84", 72" x 84", 84" (set of 2), 96" (set of 2)
Aluminum, Dark Bronze

160S (Pemko 303)

Stocked Product
36" x 84", 72" x 84", 84" (set of 2), 96" (set of 2)
Aluminum, Dark Bronze

Overlapping Metal Astragals

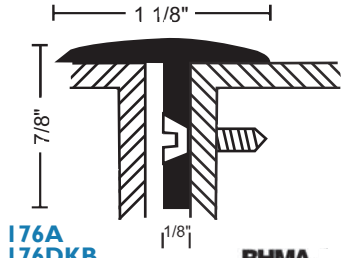

176A
176DKB
Maximum height 120"
Fits square edge doors.
#10 X 3/4" " SMS furnished.

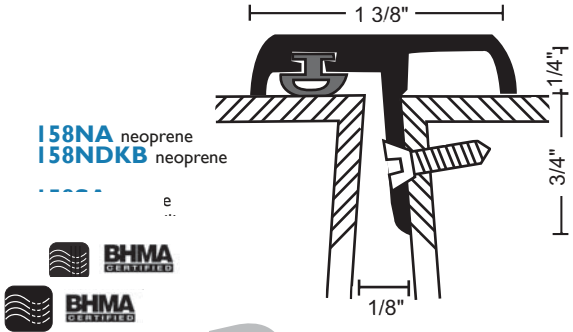

158NA neoprene
158NDKB neoprene

eled edge doors.
3/4" " SMS furnished.

DISCONTINUED
Call for availability and special pricing

176 (Pemko 359)

Stocked Product
84"
Aluminum, Dark Bro

Silicone (Pemko 355)

Stocked Product
84", 96", 108"
Aluminum, Dark Bronze

139SP (Pemko 357)

Stocked Product
84", 96" Steel Prime

05/14 American Building Supply, Inc.

National Guard Products

Gasketing

DISCONTINUED
Call for availability and special pricing

9850 (Pemko HSS2000 x S44)

Stocked Product
17', 21'

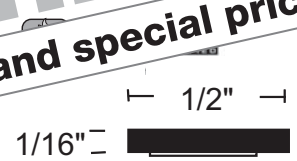

9800 (Pemko HSS2000)

Stocked Product
17', 21'
Bronze, White

Silicone Bulb Fire and Smoke Seal

Up to 3 hours steel fire doors
Up to 1 1/2 hours wood fire doors

Edge Sealing System - Category "G"
for 20 minute rated category B
wood doors perimeter application up to:

single swing	4'0 x 8'0
pairs	8'0 x 8'0

use 9550 at the meeting edge o...

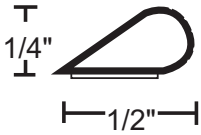

5050 (Pemko S88)

Stocked Product
17', 20', 25'
Black, Brown, White

DISCONTINUED
Call for availability and special pricing

Self-Adhesive Gasketing

Adhesive specifications: Acrylic pressure sensitive adhesive protected by polyethylene release liner. Provides high initial adhesion and long term holding power for permanent mounting in exterior or interior locations. Resistant to aging, weathering, UV radiation, water, detergent, alcohol and the influence of chemicals. End use temperature range is -40˚F up to 250˚F. Shelf life of adhesive prior to installation is one year when stored at 40˚F to 80˚F and 60% relative humidity or less.

2525 (Pemko PK33)

Stocked Product
17', 20', 25'
Black, White, Bronze

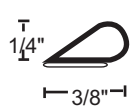

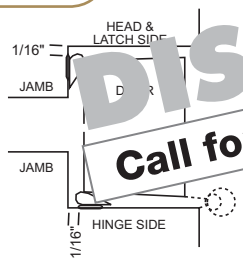

al

5040 (Pemko S44)

Stocked Product
17', 20', 25'
Bronze, Brown

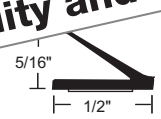

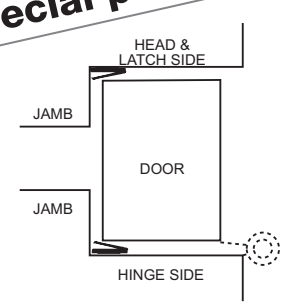

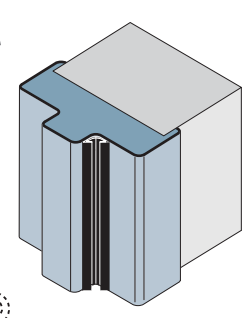

DISCONTINUED
Call for availability and special pricing

Norton

1601 Series
Multi-Sized Closers - Packed 6 per case

Features

Two Power Ranges:
Each series can be adjusted through a range of sizes:
Series 1601 Normal Power Range Closers,sizes 3 thru 6. Series 1601BF Accessibility Code Closers, sizes 1 thru 4.

Booster Spring:
Specially designed booster spring is engineered into each unit to provide additional and necessary closing force for doors which travel beyond 110° of swing.

Tri-Style Installation:
Packaged for regular arm, top jamb or parallel arm installation.

Aluminum Alloy Shell:
Norton closer shells are constructed of a special aluminum alloy which is lightweight and offers proven durability.

Rack & Pinion Operation:
Provides a smooth transmission of power, for control of the door through its full opening and closing cycle.

Adjustable Sweep Speed:
An independent regulating valve, hex-key-operated, permits adjustment of the general closing speed.

Adjustable Latch Speed:
An independent regulating valve, hex-key-operated, permits adjustment of the door's speed for approximately the last 10° of the closing cycle.

Adjustable Backcheck Cushioning:
An independent regulating valve, hex-key-operated, provides an adjustable hydraulic cushion to the door opening speed toward the end of the opening cycle.

Adjustable Delayed Action:
Available in place of backcheck. Adds a third closing speed range at the beginning of the door's closing cycle.

Note: Norton Series 1601BF door closers will meet the requirements of the Americans With Disabilities Act (A.D.A.), and will comply with industry standards for opening and closing forces as established by the Builders Hardware Manufacturing Association (B.H.M.A.).

Option H: Hold open arm function

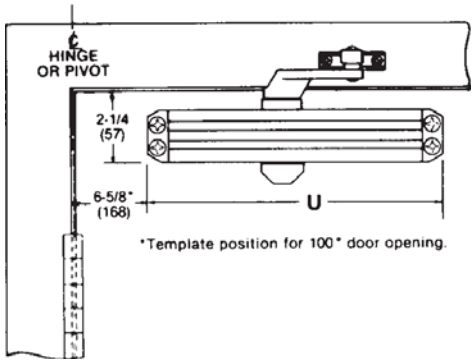

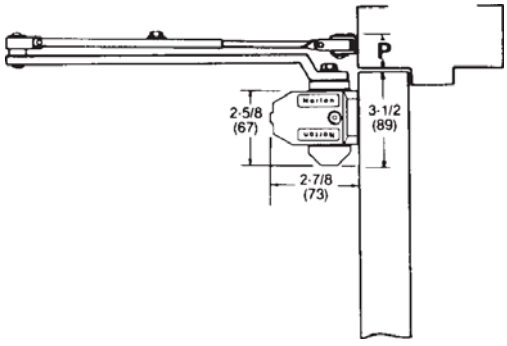

Stocked Product
Regular, BF, DA,
H stocked in 689 only
689 (aluminum)
690 (dark bronze)

Norton

5740 - Low Energy Operator

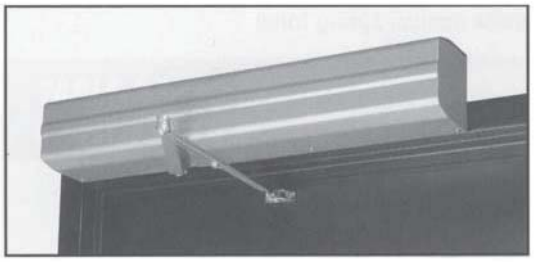

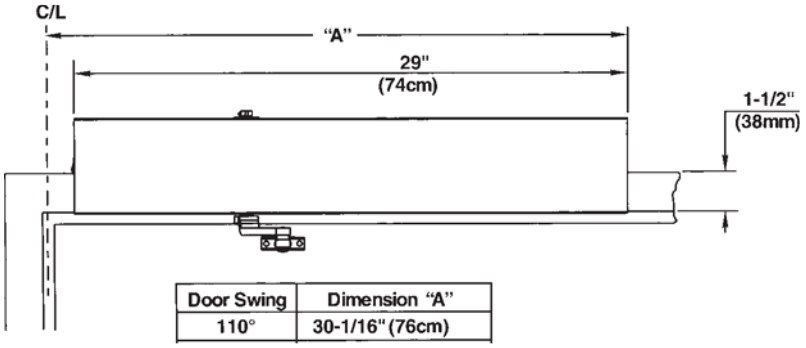

Door Swing	Dimension "A"
110°	30-1/16" (76cm)

Features

- Universal push or pull side mounting
- Acceptable for fire rated doors
- Door can be manually operated if desired
- 1600 closer has adjustable spring power, back check, latch and sweep valves
- Hold open options 0-30 seconds
- Motor stops if door is obstructed during an opening
- UL Listed and ANSI A156.19 meets ANSI A156.4
- When door is manually opened, the drive train and motor are not engaged
- 5710 pull side
- 5730 push side

Signage Supplied Standard

428 (2 per Operator)

429 (1 per switch)

433 (1 per switch)

Stocked Product
689 (aluminum)

Norton

5740 - Accessories

539 - Radio Frequency Receiver

- 433 MHz

Stocked Product
539

---

505 - Activating Door Switch

- 6" W. x 6" H.
- 9 volt battery
- 15 amp @ 125VAC
- Flush mounted
- Stainless steel with blue letters

Stocked Product
505
555 - 6" square surface mount box

---

548 - Transmitter

- Converts existing hard wired push plates to work with RF receivers offered after June 2013
- Single channel
- 9 volt

Stocked Product
548

Norton

7500 Series

Applications

Series 7500 closers are narrow projection door controls: projection is just 2 1/8" from the surface of the door or jamb. They are complete with covers finished to suit the decor of other hardware. They are available with sprayed covers or BHMA plated finishes. Norton Series 7500 closers are non-handed and are packaged with both a mounting shoe and soffit plate. Any Series 7500 can be installed Regular Arm or Parallel Arm. It can also be installed top jamb where frame face and frame reveal permit, it can be installed on either right or left hand doors.

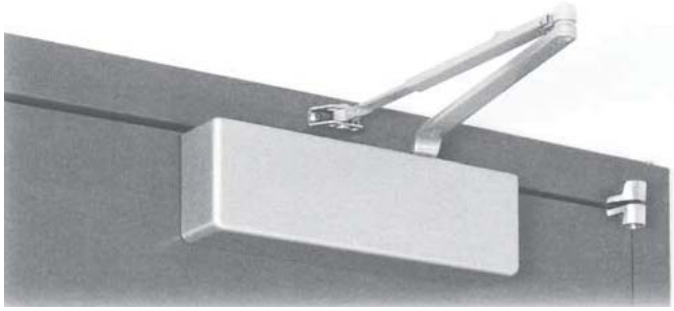

Regular Arm

This is the only pull side application where a double lever arm is used. It is the most power efficient application for a door closer. Sufficient frame, door and/or ceiling clearance must be considered. Since the arm assembly projects directly out from the frame, this application may present an aesthetic issue or be prone to vandalism.

All closers are stocked, packed tri-pack with parallel arm bracket

Options

BF: No longer need to specify. All 7500's have new spring for size 1-6
CLP: Built in stop effective at one point at installation from 85°-110°. Parallel arm application only
DA: Delayed Action Closing
H: Hold open arm function
PR: Parallel rigid arm (heavy duty)
SNB: All closers packed with sex nuts and bolts

Stocked Product
Options Stocked: H, Regular, CLP
689 (aluminum)
690 (dark bronze)

U.L. Listing

All Norton Series 7500 Closers with non-hold-open arms are listed by Underwriters Laboratories, Inc. for use on labeled fire doors. Series 7500 are Accessibility Code Closers and are adjustable in a 1 thru 6 size range.

8500 Series

Features

This series incorporates independent sweep and latch speed adjustments. In addition, adjustable spring power and adjustable backcheck cushioning are standard features. Adjustable delayed action closing is available as an option in addition to the adjustable backcheck cushioning feature. Norton also offers a Multi-Size Door Closer Series which features adjustable spring power thru a range of sizes. Series 8501 has adjustable power in the Normal Power Range of sizes 1 thru 6. These closers offer low opening resistance for handicapped accessibility but still provide acceptable door control.

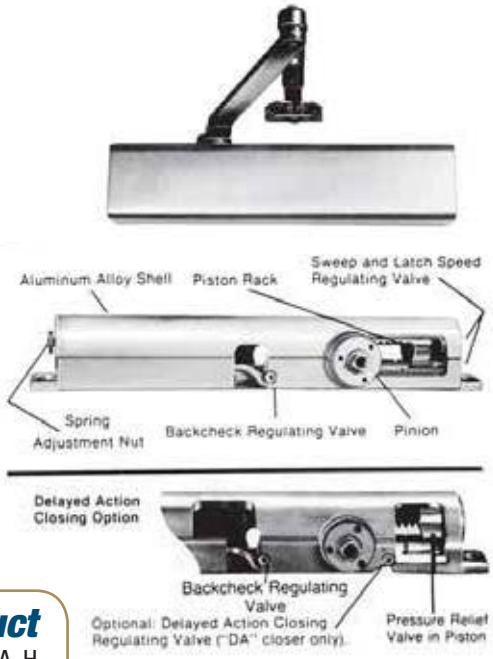

Options

BF: No longer needed. all 8500's have new spring for size 1 thru 6
CLP: Built in stop effective at one point at installation from 85°-110°. Parallel arm application only
DA: Delayed action closing
H: Hold open arm function
SNB: All closers packed with sex nuts and bolts

Stocked Product
Options Stocked: CLP, DA, H
689 (aluminum)
690 (dark bronze)

Norton - *Parts & Accessories*

Sex Nuts only (bolts excluded)(SN)
SB/SN-134

Grommet Nuts and Bolts (TBGN)
TBGN 134-38 F1600 & 1800 only

Complete Mounting Screw Parts For 8501
MSP 689

Stocked Product
689 (aluminum)
690 (dark bronze)

1601 MSP 690
7500 MSP 690

8501 Series Top Jamb Closer: Closer Mounting Plates

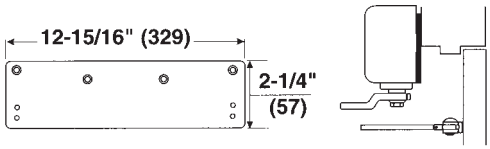

Low Ceiling Clearance - #8146 Drop Plate
For use where low ceiling clearance prevents normal top jamb mounting. This plate is used when clearance is from 1-7/8" to 2-7/8 (48mm to 73mm). Where ceiling clearance is less than 1- 7/8 (48mm) see #8148 Drop Plate detailed in the following text.

Overhead Door Holder - #8146 Drop Plate
For use where a surface or concealed overhead door holder prevents normal top jamb mounting. This plate drops the closer and allows arm mounting screws to clear the bottom of the door holder. This places the centerline of the arm mounting screws at 2-7/8 (73mm) from the top of the door.

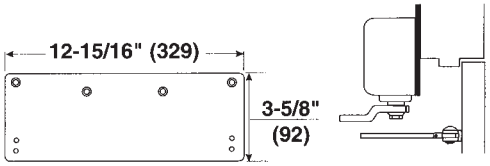

Low Ceiling Clearance - #8148 Drop Plate
For use where the ceiling clearance is between 1- 1/2" and 1- 3/4" (38mm and 44mm).

Stocked Product
689 (aluminum)
690 (dark bronze)

Norton - *Parts & Accessories*

7500 Series

Closer Mounting Plates - Top Jamb Arm

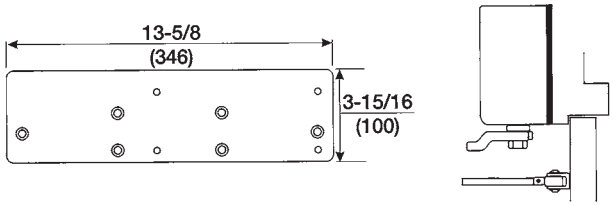

Narrow Frame - #7786 Back Plate

For use where a narrow frame face prevents the closer from being mounted directly to the frame. This Back Plate must be used for closer mounted on a frame between 1-7/8 and 3-1/8 (48mm and 79mm) in height.

Stocked Product
689 (aluminum)
690 (dark bronze)

Closer Mounting Plates - Regular Arm

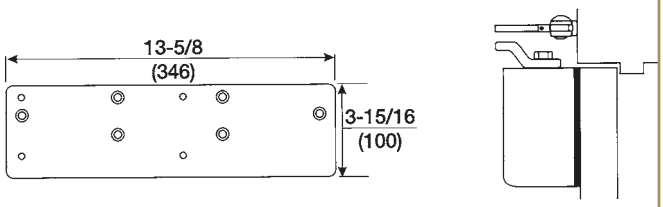

Narrow Top Rail - #7786 Drop Plate

For use where the narrow top rail of the door prevents the closer from being mounted directly to the door surface. This drop plate must be used for closer mounted on a top rail between 1-7/8' and 3-3/8" (48mm and 86mm) in height.

Stocked Product
689 (aluminum)
690 (dark bronze)

Closer Mounting Plates - Parallel Arm

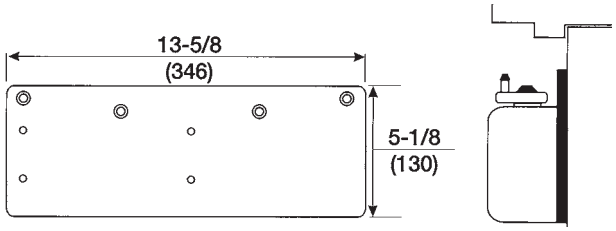

Narrow Top Rail - #7788 Drop Plate

For use where a narrow top rail prevents the closer from being mounted directly to the door surface. This drop plate can be used to mount a closer on a top rail as narrow as 2-1/2' (64mm) in height.

Stocked Product
689 (aluminum)

Pemko

Saddle Thresholds

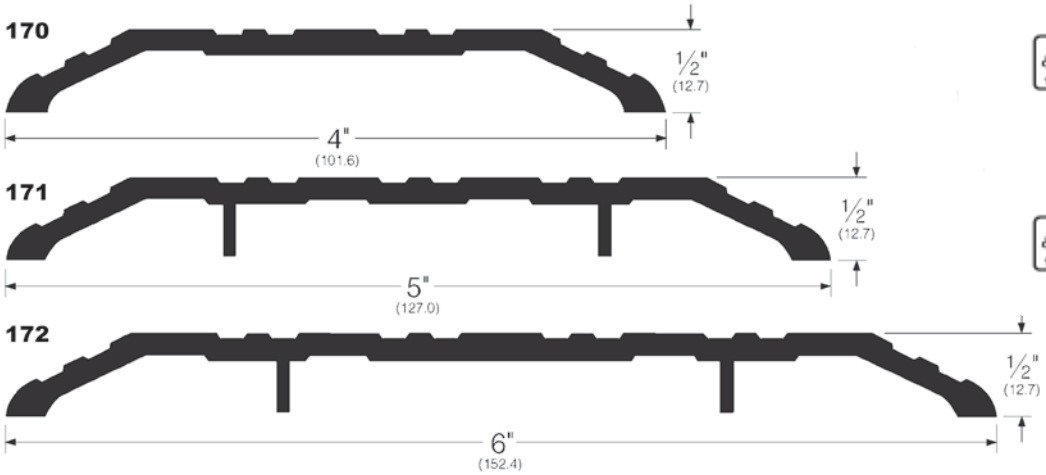

Stocked Product

Finish Key
A: Aluminum
D: Dark Bronze
SN: Satin Nickel

Model	Size	Finishes
170	36”, 48”, 72”	Aluminum,
170	36”, 48”, 72”	Dark Bronze
171	36”	Aluminum, Dark Bronze, Satin Nickel
171	48”	Aluminum, Dark Bronze
171	72”	Aluminum, Dark Bronze, Satin Nickel
172	36”, 48”, 72”, 96”	Aluminum,
172	36”, 48”, 72”	Dark Bronze
172	36”, 72”	Satin Nickel

Stocked Product

Finish Key

2005AV	Aluminum
2005DV	Dark Bronze
255A	Aluminum
255D	Dark Bronze

Model	Size	Finish
2005	36”, 48”, 72”	Aluminum (AV), Dark Bronze(DV)
255	36”, 48”	Aluminum, Dark Bronze

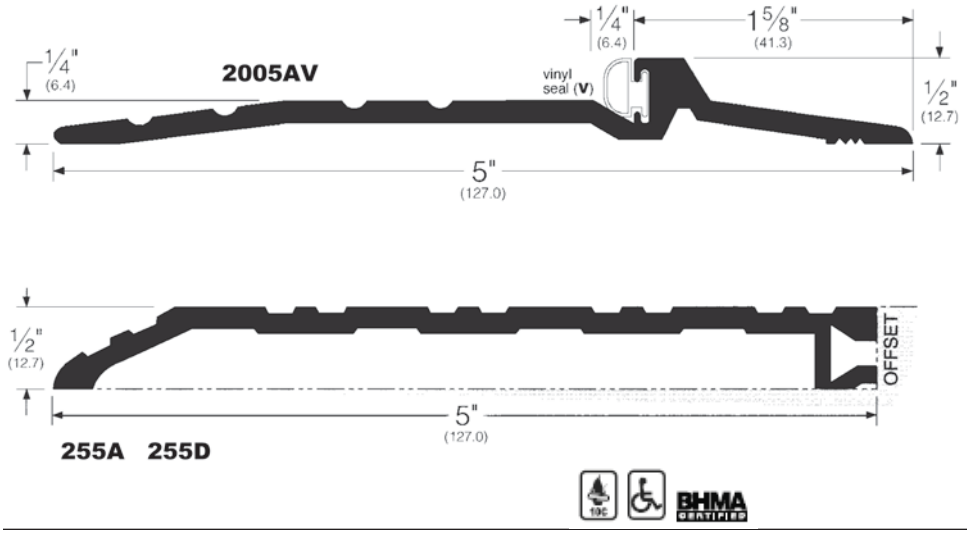

Pemko

Thresholds

270

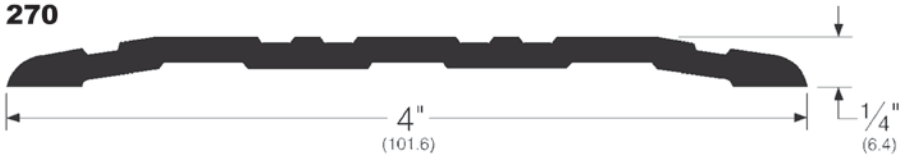

271

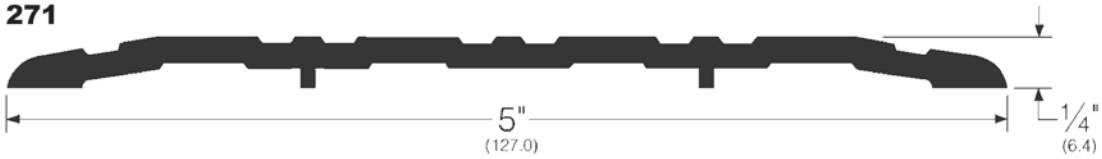

272

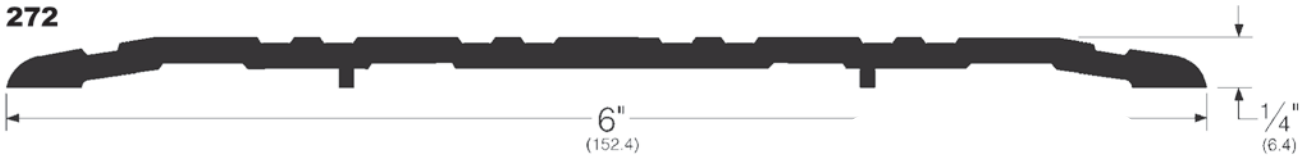

Stocked Product

Finish Key
A: Aluminum
D: Dark Bronze
SN: Satin Nickel

Model	Size	Finish
270	36”, 48”, 72”	Aluminum, Dark Bronze
271	36”, 48”, 72”	Aluminum, Dark Bronze
272	36”, 48”, 72”	Aluminum, Dark Bronze
272	96”	Aluminum

Stocked Product

Finish Key
A: Aluminum
D: Dark Bronze

Model	Size	Finish
276	36”, 48”, 72”	Aluminum, Dark Bronze
2748	36”, 48”, 72”	Aluminum, Dark Bronze
2748	96”	Aluminum

276

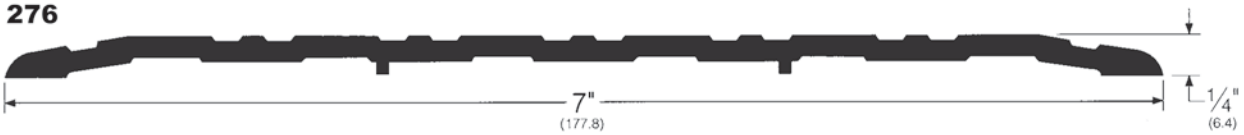

2748

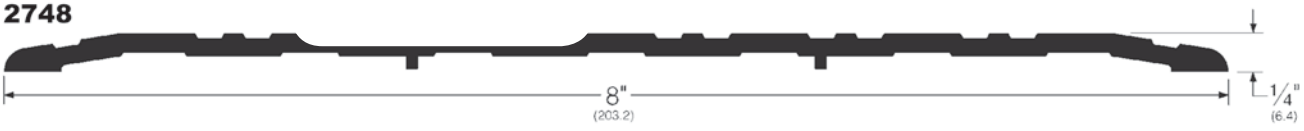

Pemko

Door Bottoms, Shoes & Sweeps

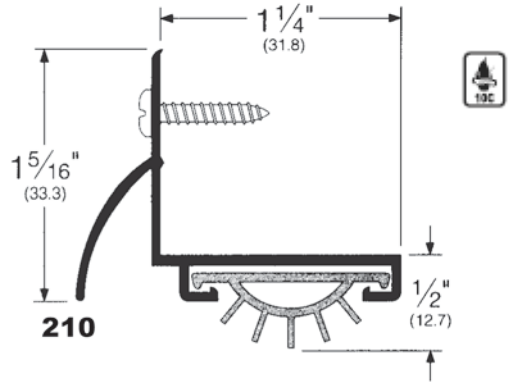

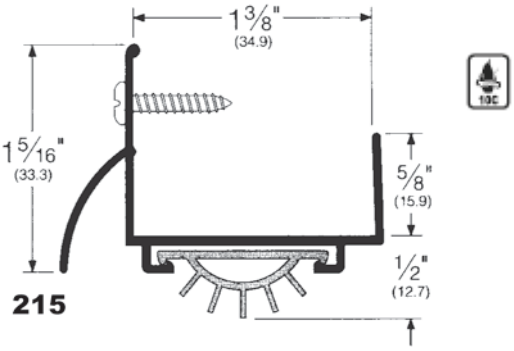

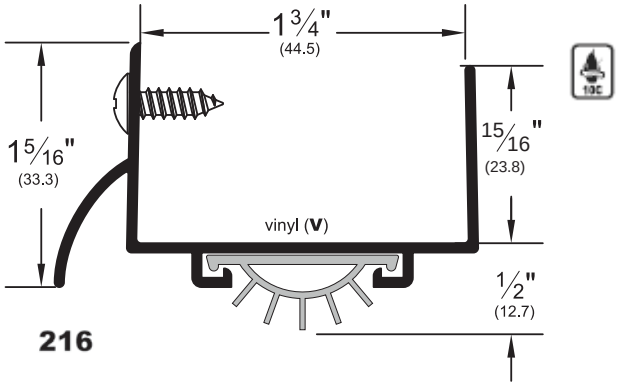

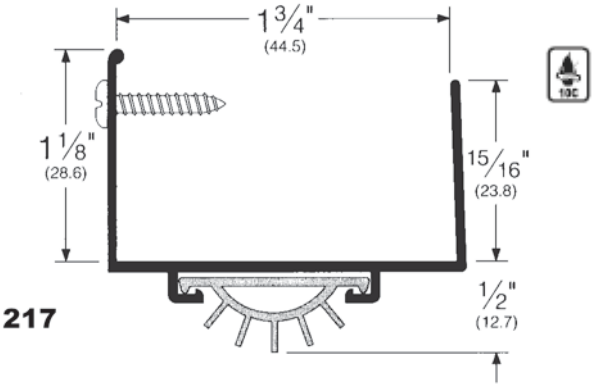

Stocked Product

Finish Key
AV: Aluminum
DV: Dark Bronze
SN: Satin Nickel

Model	Size	Finish
210	36", 48"	Aluminum, Dark Bronze
215	36", 48"	Aluminum, Dark Bronze
216	36", 48"	Aluminum, Dark Bronze, Satin Nickel
217	36", 48"	Aluminum, Dark Bronze

BHMA CERTIFIED

222
DOOR SHOE

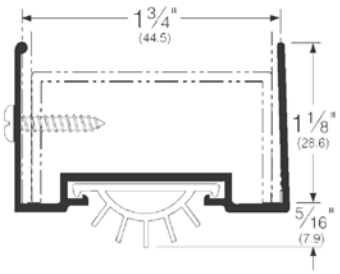

BHMA CERTIFIED

Stocked Product

Finish Key
A: Aluminum
D: Dark Bronze

Model	Size	Finish
221	36", 48"	Aluminum, Dark Bronze
222	36", 48"	Aluminum, Dark Bronze

Pemko

Surface Sweeps

307 With vinyl
307AV Aluminum
307DV Dark Bronze

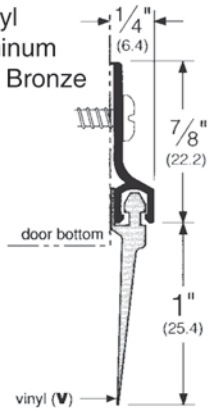

315 With Neoprene
315CN Clear Alum.
315DN Dark Bronze
315SNN Satin Nickel

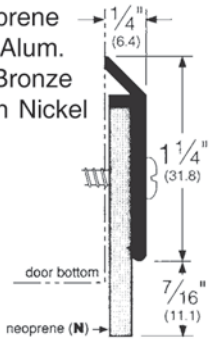

345 With vinyl
345AV Aluminum
345DV Dark Bronze

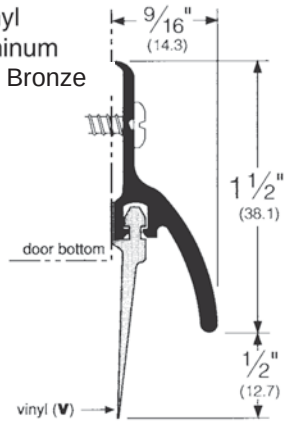

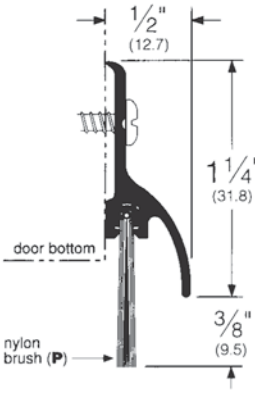

3452NB
With Nylon Brush

3452CNB Clear Aluminum
3452DNB Dark Bronze

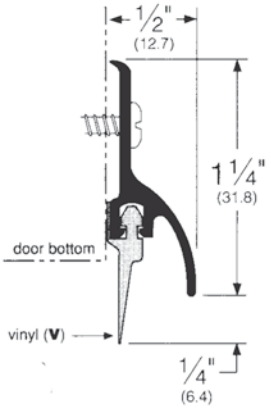

3452V With vinyl

3452AV Aluminum
3452DV Dark Bronze
3452SNV Satin Nickel

Stocked Product

Model	Size	Finish
307	36”, 48”	Aluminum, Dark Bronze
315	36”, 48”	Aluminum, Dark Bronze, Satin Nickel (36” only)
345	36”, 48”	Aluminum, Dark Bronze
3452NB	36”, 48”	Aluminum, Dark Bronze
3452V	36”, 48”	Aluminum, Dark Bronze, Satin Nickel
18100NB	36”	Aluminum, Dark Bronze

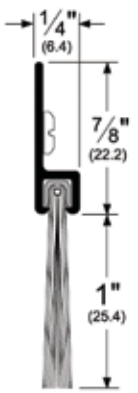

18100NB
With Nylon Brush

Pemko

Door Bottoms

411ARL

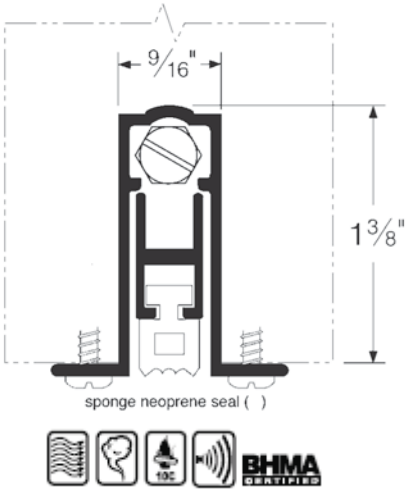

4131

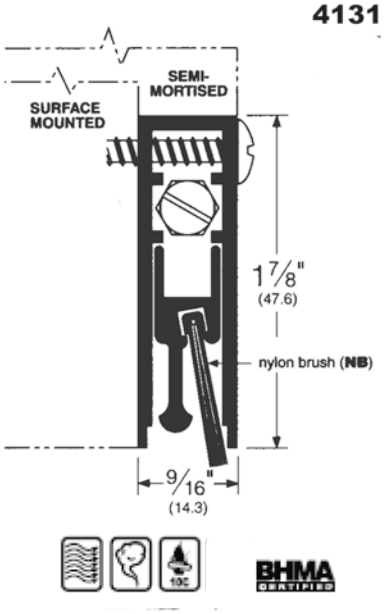

420AVL

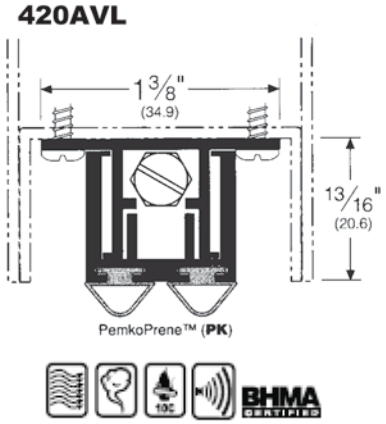

Automatic Door Bottom
4131CRL
4131DRL

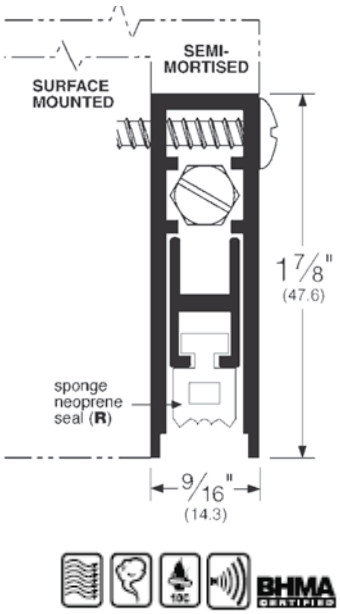

Automatic Door Bottom
4301CRL36
4301DRL36

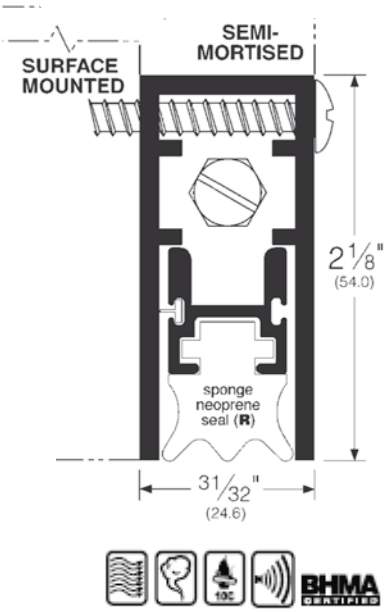

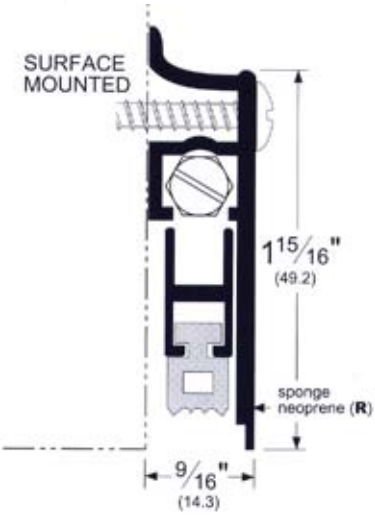

Automatic Door Bottom
412 RL Clear Aluminum, Dark Bronze

Stocked Product

Model	Size	Finish
411RL	32", 36", 48"	Aluminum
412RL	36"	Aluminum, Dark Bronze
4131RL	36", 42", 48"	Aluminum, Dark Bronze
4131NBL	36", 48"	Aluminum, Dark Bronze
420VL	36", 48"	Aluminum
4301RL	36", 48"	Aluminum, Dark Bronze

Pemko

Door Top Weatherseal & Sill Nosing

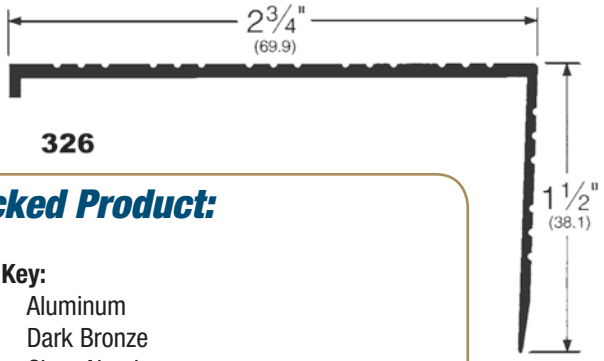

326

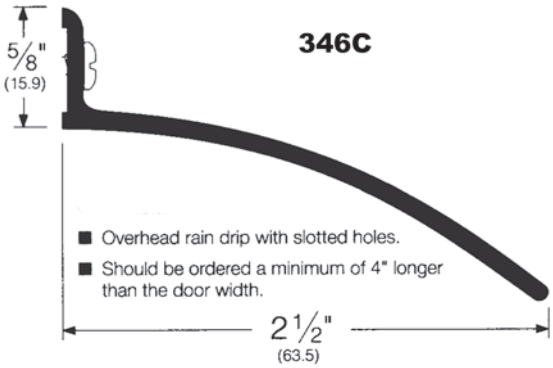

346C

- Overhead rain drip with slotted holes.
- Should be ordered a minimum of 4" longer than the door width.

Stocked Product:

Finish Key:

326A	Aluminum
326D	Dark Bronze
346C	Clear Aluminum

Model	Size	Finish
326	36",48", 72"	Aluminum, Dark Bronze
346C	36", 40", 72", 76"	Clear Aluminum

Split Astragals & Gasketing

297S - With silicone

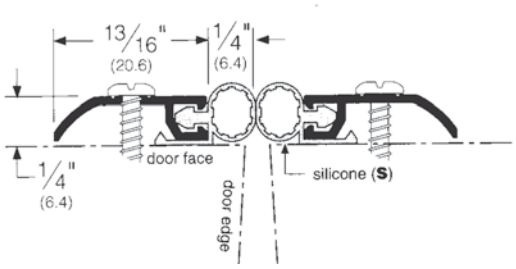

303S - With silicone

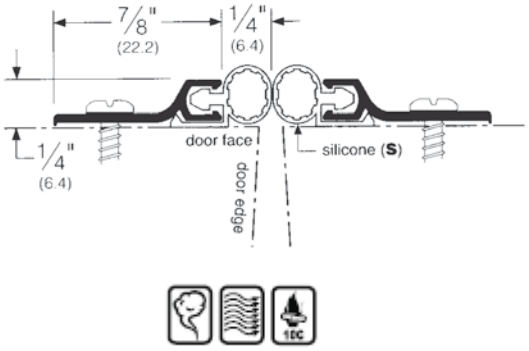

Stocked Product

Model	Size	Finish
297	36" X 84"	Aluminum, Dark Bronze
297	36" X 96"	Aluminum, Dark Bronze
297	72" X 84"	Aluminum, Dark Bronze
297	72" X 96"	Aluminum, Dark Bronze
297	84", 96"	Aluminum, Dark Bronze
303	36" X 84"	Aluminum, Dark Bronze, Satin Nickel
303	72" X 84"	Aluminum, Dark Bronze
303	84", 96" pair	Aluminum, Dark Bronze, Satin Nickel
303	120" pair	Aluminum, Dark Bronze
29326	96" pair	Aluminum, Dark Bronze

29326

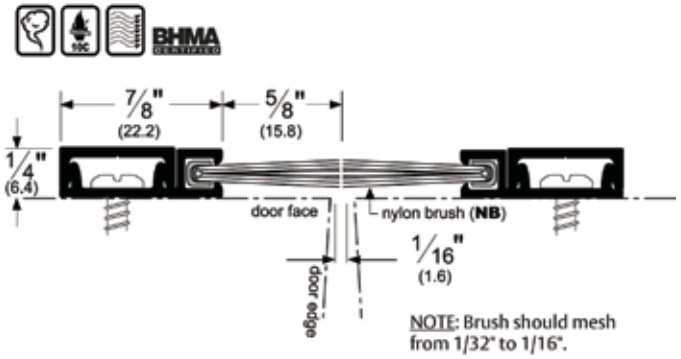

Pemko

Split Astragals & Gasketing

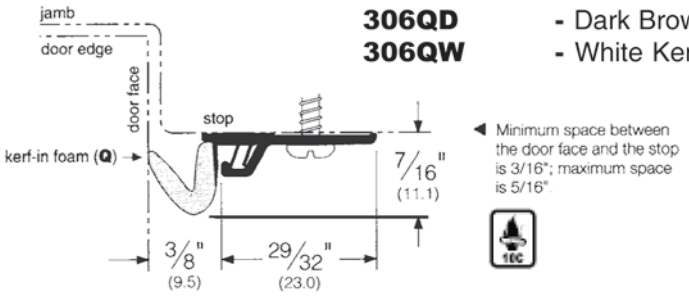

306QD - Dark Brown Kerf
306QW - White Kerf

Stocked Product

Model	Size	Finish
306AQD	36" X 80"	Aluminum
306AQD	36" X 84"	Aluminum
306AQW	36" X 80"	Aluminum

"T" & Overlapping Astragal

355CS - Silicone
355CV - Vinyl
355DS - Silicone
355DV - Vinyl

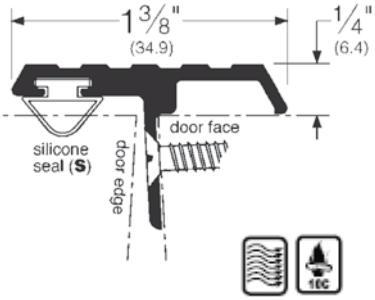

Stocked Product

Model	Size	Finish
355CS/DS	84", 96", 108", 120"	Aluminum, Dark Bronze
355CV/DV	84"	Aluminum, Dark Bronze

Pemko

"T" & Overlapping Astragals & Brush Weatherstrip

356 - Astragal

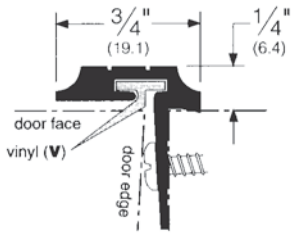

357 - Astragal

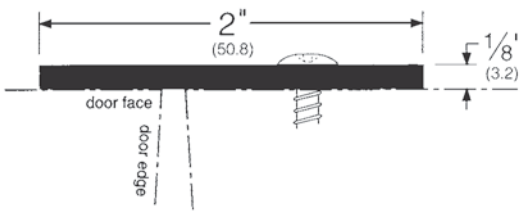

359 - Astragal

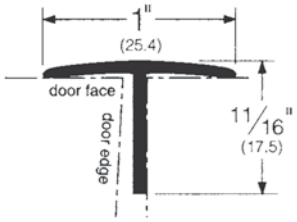

Stocked Product:

Finish Key AV: Aluminum
DV: Dark Bronze
SP: Galvanized Steel

Model	Size	Finish
356	84"	Aluminum, Dark Bronze
357	84", 96"	Galvanized Steel, Dark Bronze
359	84"	Aluminum, Dark Bronze
18041	84"	Clear Aluminum, Dark Bronze
18061	84"	Clear Aluminum, Dark Bronze

18041- CNB/DNB

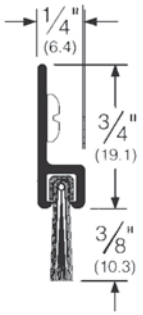

18061- CNB/DNB

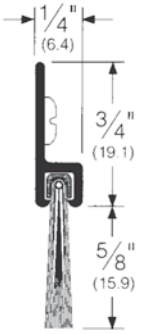

BHMA CERTIFIED

Locking Astragals Slimline Style

3493 S With silicon style insert slide bolt action

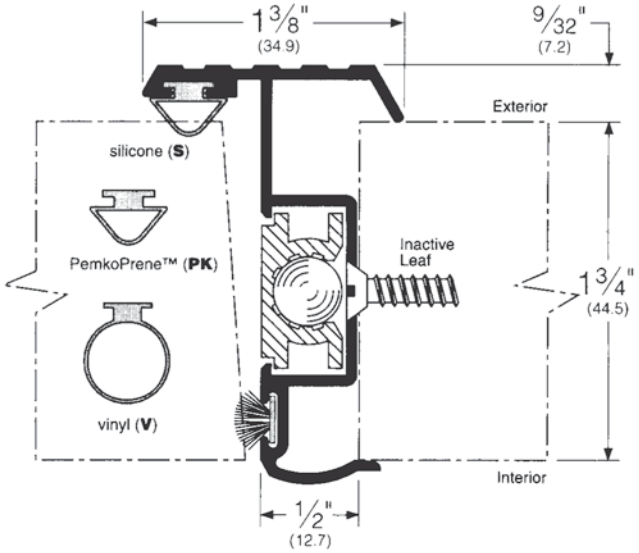

3496 Q Kerf in foam Colonial style with slide bolt

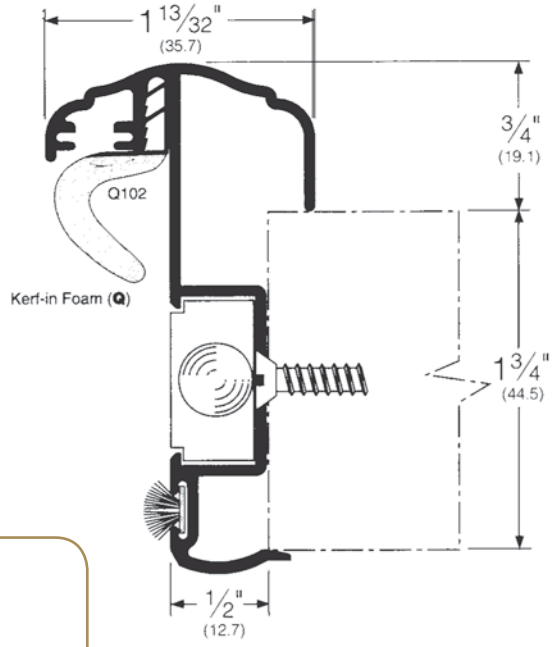

Stocked Product

Model	Size	Finish
3493S	80", 84"	Clear Aluminum, Dark Bronze
3496Q	80", 84"	Clear Aluminum, Dark Bronze

Pemko

Smoke Gasketing Pemko Prene

PK52

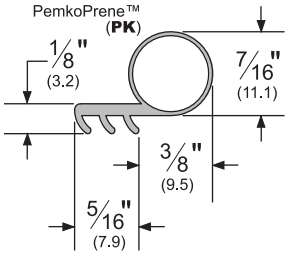

Minimum space between the door face and the stop is 1/16"; maximum space is 3/8".

Positive Pressure rated up to 20 minutes.

PK33

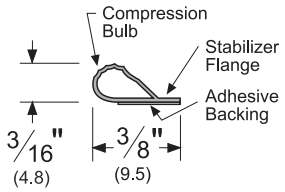

- Designed for tighter frames.
- Demonstrates extremely low closing force.
- Seal begins compressing at 3/16"; com presses to seal up to a 1/16" gap.

PK55

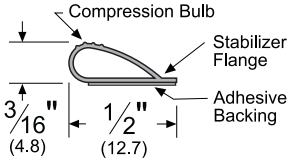

- Designed for tighter frames.
- Demonstrates extremely low closing force.
- Seal begins compressing at 3/16"; compresses to seal up to a 1/16" gap.

Stocked Product

			Model	Size	Finish
Finish key:	BL	Black	PK52	18', 20'	Black, White
	D	Dark Bronze	PK33	17', 20', 25'	Black, White, Dark Bronze
	W	White	PK55	17', 20', 25'	Black, White, Dark Bronze

Gasketing & Edge Seal Products

S44

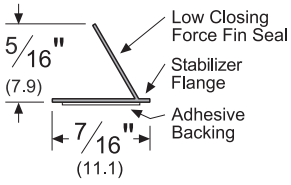

- Designed for tighter frames.
- Demonstrates extremely low closing force.
- Seal begins compressing at 5/16"; compresses to seal up to a 1/16" gap.

Stocked Product

Finish Key	D	Dark Bronze
	W	White

Model	Size	Finish
S44	17', 21', 25"	White, Dark Bronze

Pemko

Locking Astragals Slimline Style

S88 - Silicone Seal
S88 is air infiltration tested

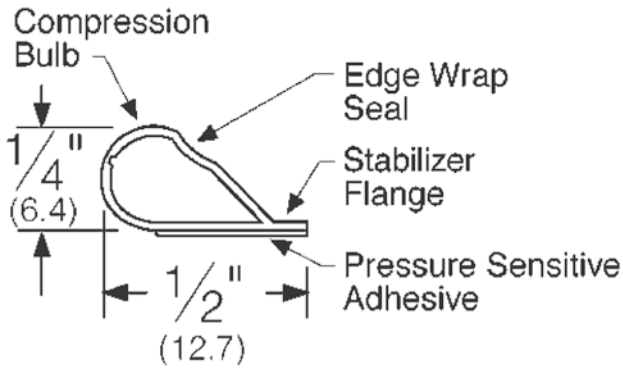

S88D - Dark Brown
Also available for special order in black, clear, tan, and white

SiliconSeal Adhesive Backed Fire / Smoke Gasketing

- Seals begin compressing at 3/16", and both can be compressed sufficiently to seal openings with 1/16" gaps, making door latching easy.
- Excellent resistance to compression set, particularly at elevated temperatures and for extended periods of times.
- Stays flexible between 70° F and 250° F with very high resistance to flex fatigue.
- Outstanding ozone resistance rating.
- Smoke tested by WYLE Laboratories in accordance with UL 1784-90; meets the requirements of NFPA 105 "Installation of Smoke Control Door Assemblies".

Stocked Product

Finish Key		
	D	Dark Bronze
	W	White

Model	Size	Finish
S88	17',21', 20', 25'	Dark Bronze, White

Gasketing - EDGE SEAL PRODUCTS

Edge Sealing Products for Positive Pressure Door System

- The new positive pressure building codes require stopping the passage of smoke, flames and hot gasses
- Pemko's intumescent and fire / smoke gasketing products have assisted numerous door and frame manufacturers in complying with the new stringent positive pressure standards UL10C and UBC7-2, Parts I and II, UBC7-2, Part I (for fire) and UBC7-2, Part II (for smoke).
- Many fire rated door assemblies (currently listed for UL10B) can now be listed for positive pressure (UL10C) by using Hot Smoke Seal in combination with SiliconSeal. Consult individual door and / or frame manufacturers for specific listing information.

HSS2000 - Hot Smoke Seal

Stocked Product

Model	Size	Finish
HSS2000	18',21',24'	White, Black
HSS2000 X S44	18',21',24'	Black
HSS2000 X S88	18', 20', 21',24'	Black

Pemko

S773 on Frame with Beveled Edge Door

- Pemko's S773 is a utility gasket that can be used in virtually any application requiring insulation from sound, smoke and weather conditions.
- Pemko's S773 can seal larger gaps than traditional seals and allows for warped doors and frames.
- Pemko's S773 fins help to absorb the door's closing impact.
- Pemko's S773 mounted on the rabbet (on the latch side jamb) means more clearance and easier operation of latches and deadbolts.

The S773 is typically used as a perimeter gasket when sound transmission is an issue. It is an effective seal against heat loss and drafts. Common installation locations include hotel rooms, theaters, offices, etc. The S773 allows a low door closing force so it is particularly well suited to locations where ADA compliance is necessary. S773 can be effectively installed on both interior and exterior doors.

The S773 has an adhesive back and should only be installed on clean, dry and cured surfaces. On the "latch side" door jamb and the door header, the S773 should be installed on the frame rabbet with the tallest fin toward the door stop. On the "hinge side" the S773 should be installed on the door stop with the tallest fin toward the frame rabbet.

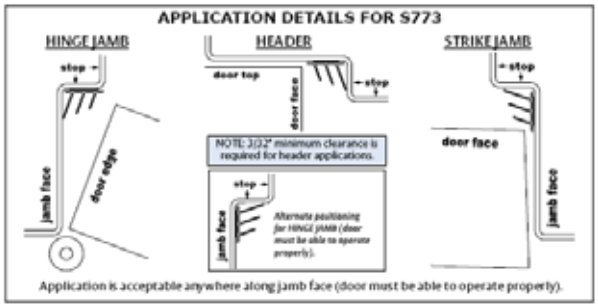

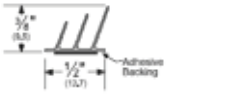

- Triple-fin design effectively blocks light and sound from infiltrating a room.
- Product designed as hospitality gasketing (see more hospitality products in the Hospitality Products section).

Stocked Product
17', 20', 25', Dark brown

ANSI NUMBER: R0E154

Fire Glazing Products

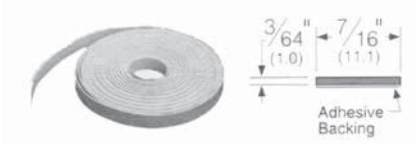

FG3000S45-14
FG30000S45 in 20 and 45 minute sidelite / borrowed lite / transom lite on hollow metal frame (screen)

FG3000S45 has successfully passed 20 minutes (with hose stream) and 45 minutes on wood and metal doors with vision lites installed.

- Maximum wood door size with FG3000S45 48" x 96" single and/or pairs approved
- Maximum hollow metal door size with FG3000S45 48" x 120" single and/or pairs approved

Note: verify all applications with your door and/or frame manufacturer

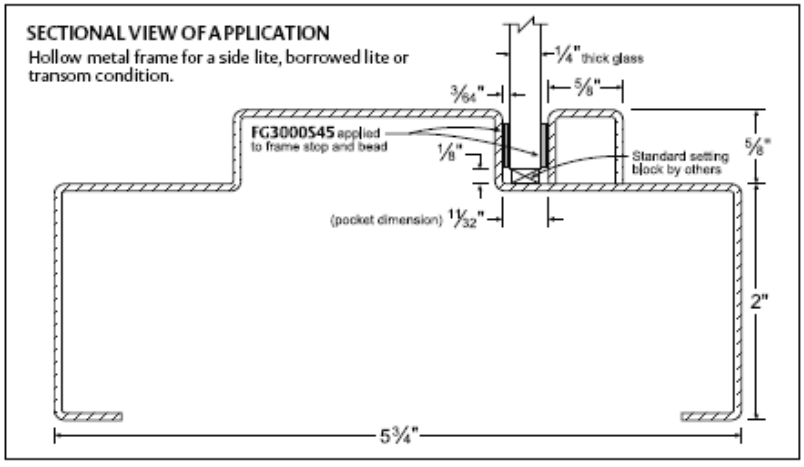

Stocked Product

FG3000S	45 Minute X 14 Foot

Pemko

Continuous Hinges

Full Mortise

Standard

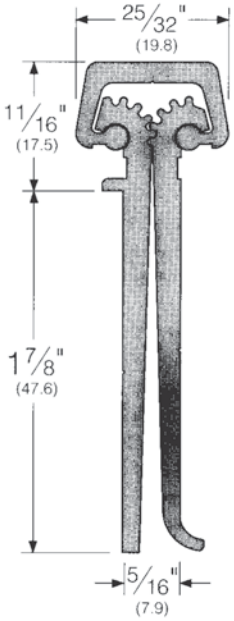

Full Surface

Standard

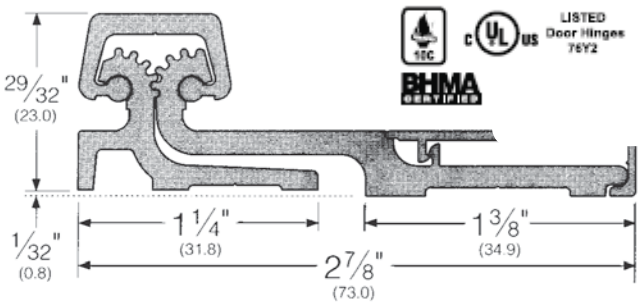

CFS83 - Full surface units are designed primarily for retrofit work and are applied to the exposed surface of the door & frame

Stocked Product

Model	Size	Finish
CFM83	83”	Clear Anodized Aluminum
CFS83	83”	Clear Anodized Aluminum

Pemko

W60 Series - Stainless Steel Sliding Track Hardware System for Wood Doors

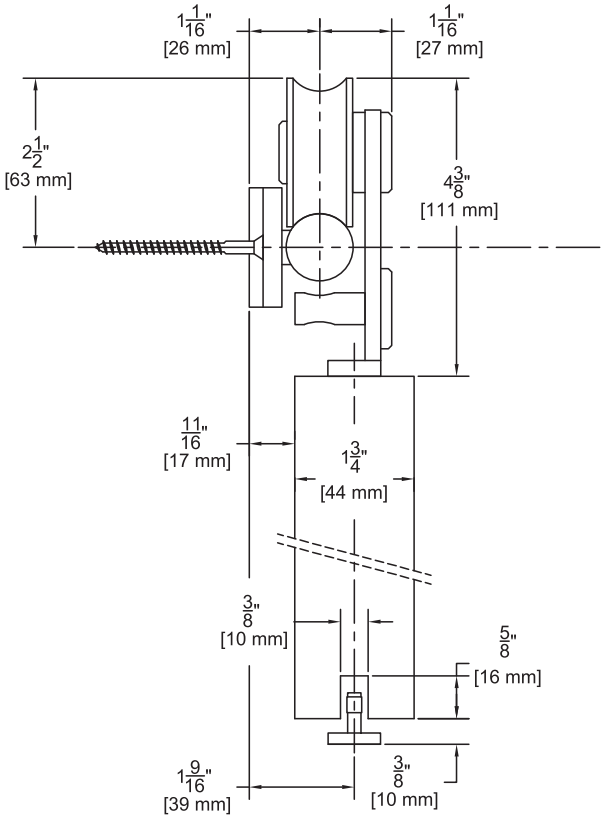

Features:

- Made of 304 stainless steel
- Nylon coated stainless steel wheel for smooth operation
- For Sliding Panels up to 176 lbs. capacity
- 5 year warranty

Configurations:
- Bi-parting
- Single

Installation: Side Wall Mount (only)

Kits Include:
- BAR/_ Stainless Steel Track (1 ea)
- BRACKET2 Stainless Steel Wall Brackets (1 ea)
- 62 Stainless Steel Hangers (2 ea)
- WOODGUIDE Stainless Steel Guide (1 ea)
- STOP2 Stainless Steel Stops (2 ea)
- Mounting Hardware

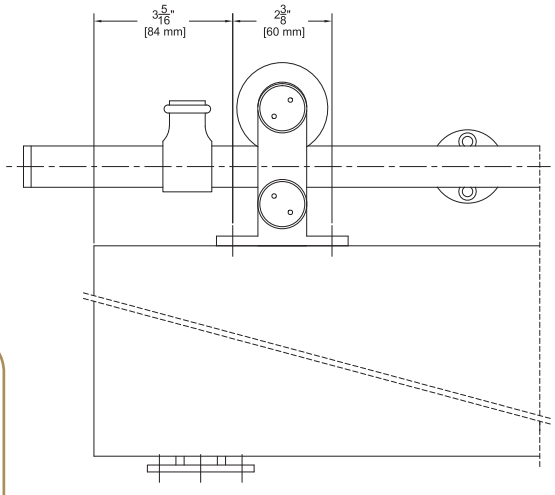

Stocked Product

Model	Track Length	Door Width	Finish
W60/6	78-3/4”	36”	Brushed Stainless Steel
W60/8	98-7/16”	48”	Brushed Stainless Steel
W60D/6	78-3/4”	36”	Dark Bronze
W60D/8	98-7/16”	48”	Dark Bronze

SPLICEROD Required for bi-parting

Pemko

W100 Series - Stainless Steel Sliding Track Hardware System for Wood Doors

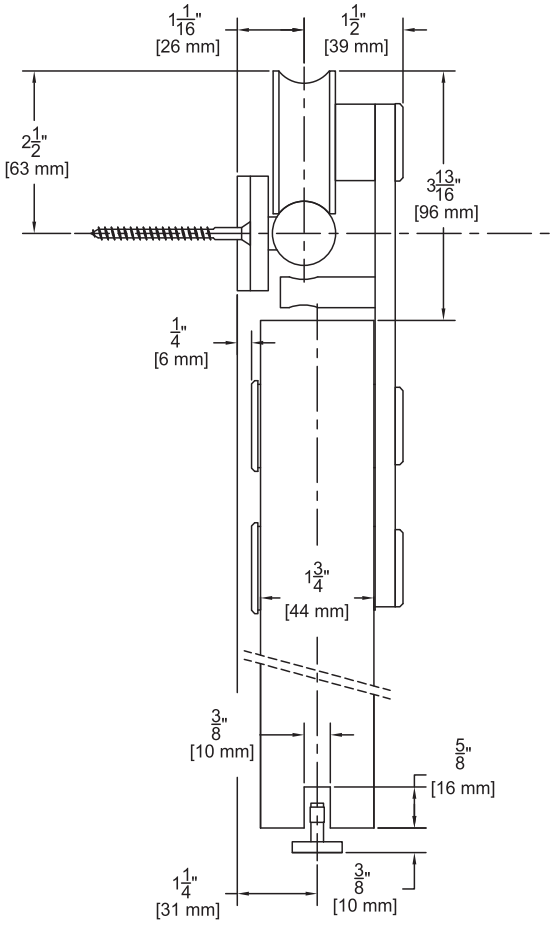

Features:

- Made of 304 stainless steel
- Nylon coated stainless steel wheel for smooth operation
- For Sliding Panels up to 198 lbs. capacity
- 5 year warranty

Configurations:
- Bi-parting
- Single

Installation: Side Wall Mount (only)

Kits Include:
- BAR/_ Stainless Steel Track (1 ea)
- BRACKET2 Stainless Steel Wall Brackets (1 ea)
- 111 Stainless Steel Hangers (2 ea)
- WOODGUIDE Stainless Steel Guide (1 ea)
- STOP2 Stainless Steel Stops (2 ea)
- Mounting Hardware

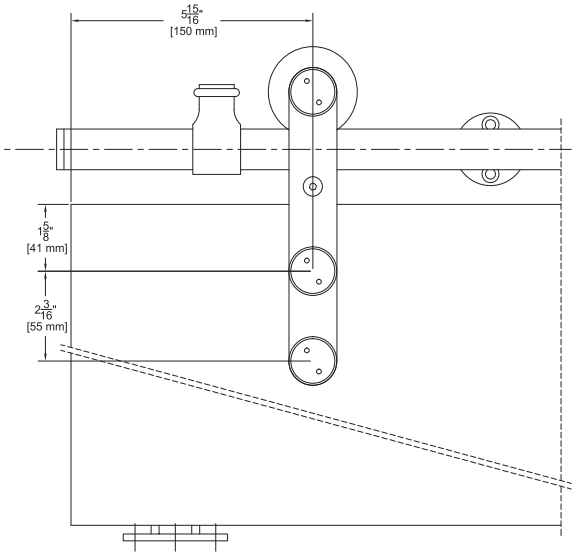

Stocked Product

Model	Track Length	Door Width	Finish
W100/6	78-3/4”	36”	Brushed Stainless Steel
W100/8	98-7/16”	48”	Brushed Stainless Steel
W100D/6	78-3/4”	36”	Dark Bronze
W100D/8	98-7/16”	48”	Dark Bronze

SPLICEROD Required for bi-parting

Pemko

280SWT - Side Wall Track (SWT) System

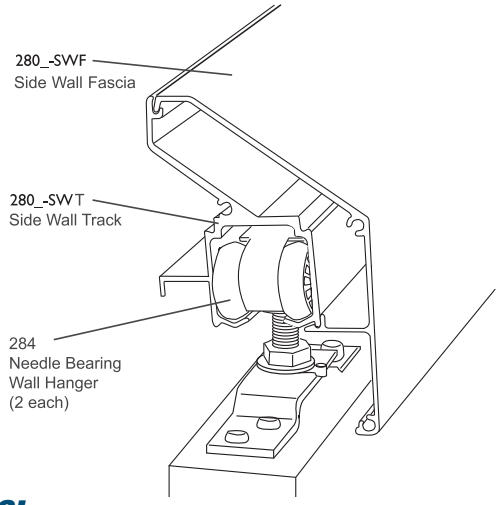

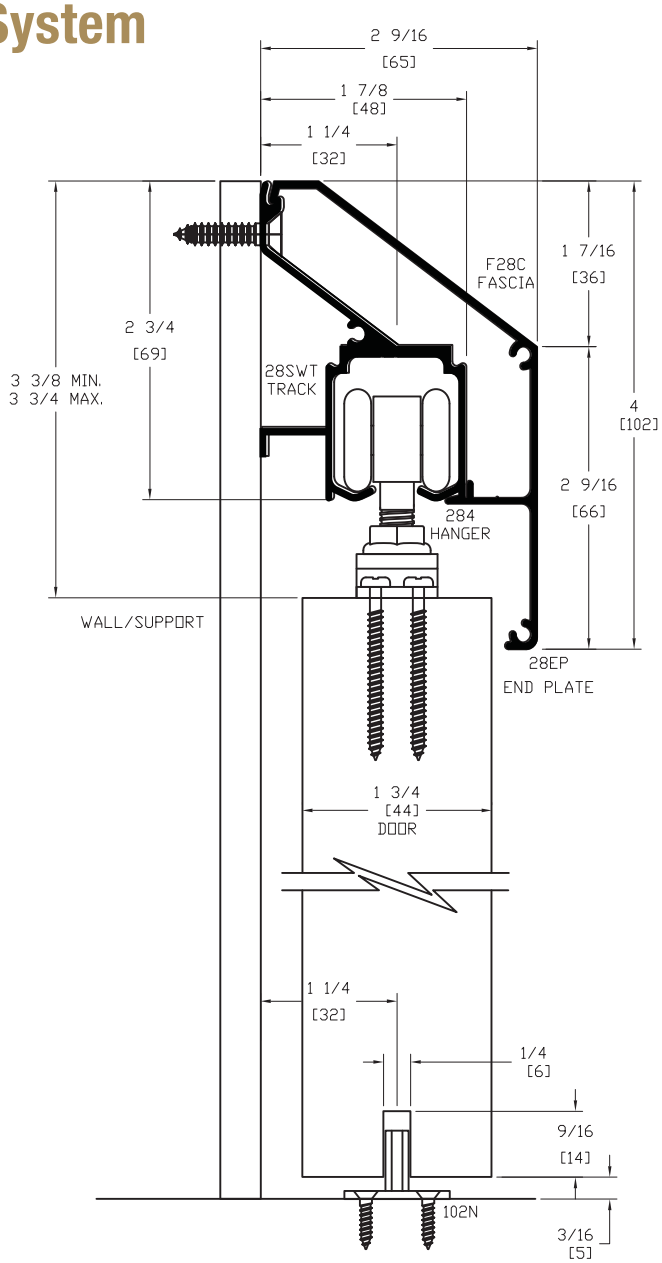

Features:

- Unique mounting bracket extruded into track
- Supports up to 200 lbs per door
- Quick, easy attachment
- No additional shims needed
- New construction or retrofit
- Innovative wall mounted bottom guide assembly allows carpet to be replaced without removing the door.

Configurations:

- Single
- Bi-parting

Kits Include:

- Side Wall Track
- Side Wall Facia
- Hangers (284) (2 ea)
- Sidewall Mount Mortise Guide (102WA)(1 ea) Stops (286) (2 ea)
- Side Wall End Plates (K28-SWEP) (2 ea)
- Bottom Guide (102N) - Nylon Door (1 ea)

OPTION: Mortise Guide (102WA)

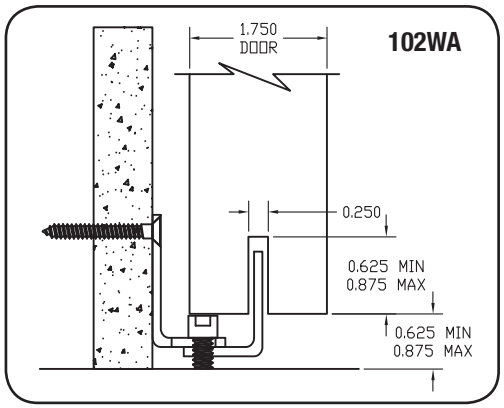

Stocked Product

Model	Track Length	Door Width	Finish (Fascia/End Plates)
280CSWTKIT/6	72”	30”	Aluminum
280CSWTKIT/8	96”	36”	Aluminum
280CSWTKIT/12*	144”	48”	Aluminum
280DSWTKIT/6	72”	30”	Dark Bronze Anodized
280DSWTKIT/8	96”	36”	Dark Bronze Anodized
280DSWTKIT/12*	144”	48”	Dark Bronze Anodized

** NOTE: 280_SWTKIT/12 comes with enough hardware for two doors.*

102WA Wall Mount Mortise Guide

Pemko

RF280 - Side Wall Track (SWT) System

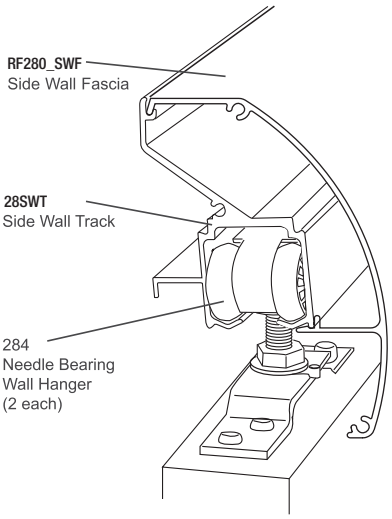

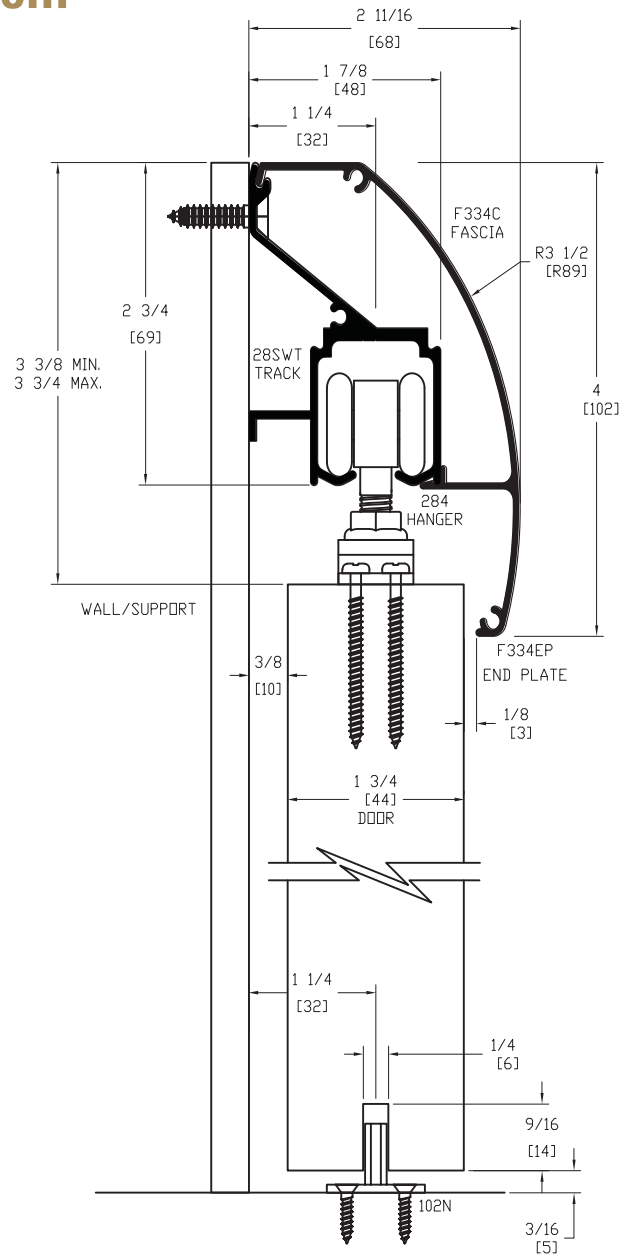

Features:

- Unique mounting bracket extruded into track
- Supports up to 200 lbs per door
- Quick, easy attachment
- No additional shims needed
- New construction or retrofit
- Innovative wall mounted bottom guide assembly allows carpet to be replaced without removing the door.

Configurations:

- Single
- Bi-parting

Kits Include:

- Side Wall Track
- Side Wall Facia
- Hangers (284) (2 ea)
- Sidewall Mount Mortise Guide (102WA)(1 ea) Stops (286) (2 ea)
  Side Wall End Plates (KF334-SWEP) (2 ea)
- Bottom Guide (102N) - Nylon Door (1 ea)

OPTION: Mortise Guide (102WA)

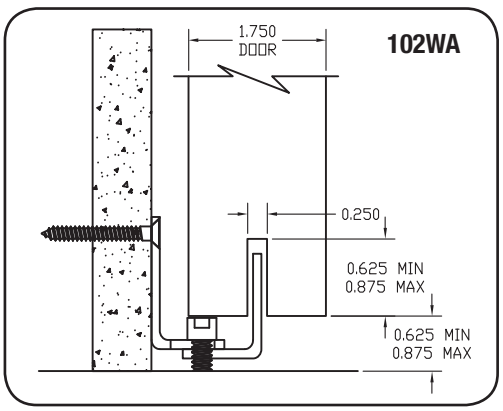

Stocked Product

Model	Track Length	Door Width	Finish (Fascia/End Plates)
RF280CSWTK/6	72”	30”	Aluminum
RF280CSWTK/8	96”	36”	Aluminum
RF280CSWTK/12*	144”	48”	Aluminum
RF280DSWTK/6	72”	30”	Dark Bronze Anodized
RF280DSWTK/8	96”	36”	Dark Bronze Anodized
RF280DSWTK/12*	144”	48”	Dark Bronze Anodized

** NOTE: RF280_SWTK/12 comes with enough hardware for two doors.*

102WA	Wall Mount Mortise Guide

Rustic Sliding Barn Door Hardware

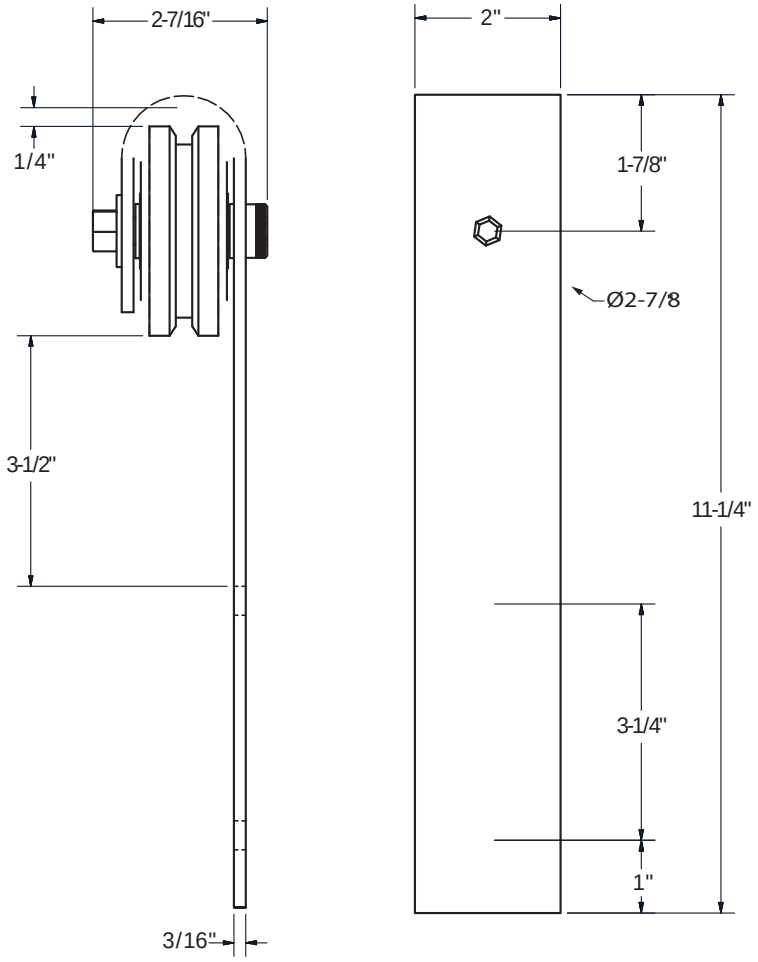

Barn Door Hardware with an Industrial Make.
A true rustic style, the Industrial Hanger is characterized by its metal hanger strap that loops completely over the top of the wheel, leaving the sides of the wheel visible as it rolls along the track. A substantial looking roller strap with a straight bottom edge and unique industrial look. The hanger mounts to the face of the door.

Features:

- Color/Finish: Flat Black
- Wheel Type: Black Nylon
- Track & Hardware Pack is for 1 door.
- Weight Limit: 500 pounds Per Hanger Pair

Kits Include:

- Hanger Assembly
- Track pre-drilled for mounting hardware
- Stops
- Floor mount door guide
- Mounting Hardware

Stocked Product

Model	Track Length	Finish
RUSBARN BLK 6	6’	Black
RUSBARN BLK 8	8’	Black

Perfect

DoorSaver II

DoorSaver II catches both the front and back side of the hinge for total protection. Its truly unique design means no damage. No hinge pin creeping up. And no bumper. All you see is the beautiful, ultra-low profile and damage-free doors and trim.

Features:

- Bumperless design eliminates damage to doors and trim
- Ultra-low profile in four designer finishes
- Installs in seconds – no tools required
- Hinge mounted to fit 3 1/2" OR 4" residential hinges
- Won't work up like conventional hinge-mounted products
- Made from strong carbon steel

Stocked Product

No.	Finish
01271	609 - Antique Brass
01272	605 - Bright Brass
01273	625 - Chrome (Dull finish)
01274	619 - Satin Nickel
01275	620 - Antique Nickel
01276	613 - Oil Rubbed Bronze
01278	622 - Black

Perfect

DoorSaver 3 Commercial

DoorSaver 3 Commercial provides a stop that does not contact the casing or door. It's ultra-low-profile design utilizes the existing hinge pin to create bumperless protection for doors and trim.
DoorSaver 3 Commercial is simple to install, looks great and stays in place without "working up." Designed to fit a variety of commercial hinges with standard or non-standard diameter hinge pins. Includes a vinyl bushing to assist in accommodating the various pin diameters.

Features:

- Bumperless design eliminates damage to doors and trim.
- Ultra-low profile in three designer finishes.
- Installs in seconds. No tools required.
- Hinge mounted to fit all doors.
- Won't work up like conventional hinge-mounted products.
- Made from strong carbon steel.

Stocked Product

No.	Finish
01204	619 - Satin Nickel
01206	613 - Oil Rubbed Bronze

Pro-Lok - *Auto Openers*

A004 - Gas Cap Key

Use this tool to open almost any locked gas cap.
Designed to be used like a rocker pick.

Stocked Product
A004

A010 - The Original Slim Jim

This is the Original Slim Jim and still the best.
3/4" x 22-1/2" x .032 thickness. Stainless steel.

Stocked Product
A010

A011 - Super Slim Jim

Wider and stiffer than the original.
1-1/4" x 25" x .032 thickness. Stainless steel..

Stocked Product
A011

A025 - E-Z Jim

Medium thickness Slim Jim.
1" x 25" x .040 thickness. Stainless steel.

Stocked Product
A025

A030 - Long Slim Jim

Be able to reach even the deepest linkages.
Just like the original, only longer. 3/4" x 29-1/2" x .032 thickness.
Stainless steel.

Stocked Product
A030

A034 - MCOT-Narrow

The original Multi-Car Opening Tool.
Narrow width and short reach.
Xacto-Grip Flattened.

Stocked Product
A034

A035 - MCOT-Wide

The wide MCOT is for cars
with wide door panels.
Xacto-Grip Flattened.

Stocked Product
A035

A036 - MCOT-Long

Stretched for maximum reach.
Long and narrow MCOT tool.
For hard to reach activators.
Xacto-Grip Flattened.

Stocked Product
A036

A037 - MCOT-Button Finger

The MCOT modified to operate
vertical button cars.
Remove the protective cap to use
the precision ground tip.
Xacto-Grip Flattened.

Stocked Product
A037

Pro-Lok - *Auto Openers*

A038 - Double Slide Tool

Double ended tool. Short reach for narrow doors combined with reverse tip for reaching under horizontal rods.
Very wide usage.
Xacto-Grip Knurled & Flattened.

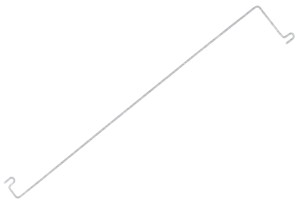

Stocked Product
A038

A042 - Long Reach Tool

Across the car entry tool. Allows you to reach inside a car to an activator on the opposite side of the car or to retrieve the keys. Extends up to 76" with use of middle section.

Stocked Product
A042

A042-LA - 58" Long Arm Tool

The A042-LA -Long Arm Tool is approximately 58" in length. Offers the versatility to open a wide range of vehicles. Designed to enter into the passenger compartment of the vehicle through the door using wedges and/or door jack type tools and reaching across the vehicle to manipulate interior lock mechanisms. The tool is powder coated with a soft vinyl tip.

Stocked Product
A042-LA

A042-LAXL - 76" Long Arm Tool

The A042-LAXL Long Arm Tool is approximately 76" in length. Offers the versatility to open a wide range of vehicles. Designed to enter into the passenger compartment of the vehicle through the door using wedges and/or door jack type tools and reaching across the vehicle to manipulate interior lock mechanisms. The tool is powder coated with a soft vinyl tip.

Stocked Product
A042-LAX

A042-QC1 - Quick Change™ Long Reach Tool

The A042-QC1 gives you the versatility to unlock many vehicles on the road. The multi-piece Quick Change tool is designed to enter into the passenger compartment of the vehicle through the door using wedges and/or door jack type tools. The specialty formulated Glow-in-the-Dark tip comes in handy on some openings at night.
When extra length is needed, simply use the 18" "extension" between the rigid "handle" and rigid tool "body". Our seamless design, not needing a bulky coupler, can reach up to 67" and can be stored easily. The A042-QC2 is a convenient accessory offering more accessibility.

Stocked Product
A042-QC1

A042-QC2 - Quick Change™ Long Reach Tool

The A042-QC2 is a convenient addition to the A042-QC1. The thin diameter tool bodies screw directly into the rigid "handle" or 18" "extension" without the use of a bulky coupler. The thinner material may provide less wedging or stress on the vehicle. It is easier to slightly bend the thin diameter bodies to pull or push on the desired unlocking feature.

Stocked Product
A042-QC2

A060 - Double Sided Wedge

Made of high impact plastic. Different height on each side allows you to adjust to doors with varying flexibility.

Stocked Product
A060

A061 - Grey Rubber Wedge

Made of heavy-duty but soft non-marking high grade rubber.

Stocked Product
A061

Pro-Lok - *Auto Openers*

A065 - Pump Wedge

Bag only 6"x 6-1/2"
w/Pump 13"x 6-1/2"

Window wedge for auto opening.The pump wedgeis an inflatable wedge made of non-marring vinyl material.
Rounded corners for easy entry.

Stocked Product
A065

AL15500 - 3 AA Cell Hardbody Light

4.5v car opening light powered by 3 AA batteries*.
Brighter gas filled Krypton slim bulb, switch-less light, heavy-duty aluminum body, durable black gloss powder coat finish, suction cup clip, flexible wand.
Use AL12110 bulb only! Suction clip, storage case and bulb included.
Lifetime warranty (excluding bulb).

Stocked Product
AL15500 - 3 AA Cell Hardbody Light
AL12110 - 4.5v Krypton Bulb for AL15500

*Batteries not included

AKUC - Ultra Combo Kit

18 Piece Combo Kit
The combo kit is a mix of the most popular traditional car opening tools snuggly fit into the lid of the case as well as our assortment of "Quick Change" Long Reach Tools custom fit into the bottom of the specialty molded case. The selection of traditional tools includes our most popular stainless steel round edged Slim Jim, three of our most popular patented Xacto Grip tools including our Double Ended Hook and Lift Tool, Double Ended Slide Lock Tool, Wide Panel MCOT Under the Window Tool, Protective Tool Sleeve, 52 page Tool Usage and Instruction Booklet, and Wedge Starter and Window Protector.
The Long Reach Tools custom fit into the bottom of the case include the 5-pc Long Reach Set featuring the ¼"heavy duty Handle, 1/4" heavy duty rigid Tool Body, 1/8" bendable Hook Tool Body, 1/8" bendable "L" Hook Tool Body, heavy duty extension (when longer reach is needed), 2 rubber wedges, 2 plastic wedges, heavy duty Pump Wedge and Plastic Tool Sleeve.
Tools: A025, A035, A038, A039, A042-QC1(Consisting of : A042-QC1-01, A042-QC1-02, A042-QC1-03),
A042-QC2 (Consisting of : A042A, A042B), A042SL, A064, A065-A1
Book: A095 Wedge: A065, Set of A064, A067 (2)

Case Size
28" L x 9" W x 4-1/2" H

Stocked Product
AKUC

Pro-Lok - *Blue Punch/Key decoders*

BP201- BLUE PUNCH

Stocked Product

BP201- BLUE PUNCH
BP201IC - I-CORE A2 SYSTEM
BP201KW - KWIKSET
BP201SC - SCHLAGE-CLASSIC
BP -CASE

BP201IC - I-CORE A2 SYSTEM

A2 Standard Interchangeable Core (I/C) -
*will cut A3 & A4 w/purchase of code bar Best, Falcon & Arrow
Small Format I/C Key Sections A-R, TA-TE, W Arrow 1A-4D
Exclusions: Arrow Flexcore, Kaba Peaks, Insta-Key

BP201KW - KWIKSET

Kwikset Standard - *Titan - (*Will Not Cut Square 1st Cut) Yale residential

BP201SC - SCHLAGE-CLASSIC

Schlage Classic (Including I/C) Obverse Key Sections Only C, CE, E, EF, F, FG, G, H, J, K, L (Aftermarket L Blanks Only)
Primus - Same Key Sections As Obverse Except A "P" Has Been Added To Keyway # (ie: CP, CEP, EP, ... Etc.)
Schlage Everest - C Key Sections (I.E. C123, C124, C126, C135, C145..... etc.) (Including I/C)
Everest Primus - Uses Same Names
Exclusions: Numbered Key Sections, Quad Key Sections, Reverse Key Sections, Everest-B (B+3 Digits), Everest-D (D+3 Digits)

BP -CASE

Take your Blue Punch™ almost anywhere with this specialty constructed Blue Punch™ case.

KD01 - Key Decoder

Decoder for Kwikset, Schlage, Weiser, & Weslock

Stocked Product

KD01

KD98 - Key Decoder

Decoder for ASSA

Stocked Product

KD98

KD02 - Key Decoder

Decoder for Medeco small pin, Medeco large pin, Master Padlock, & American Padlock

Stocked Product

KD02

KDIC - Key Decoder

Decoder for Best/Falcon & other I/C keys using standard A2 increments

Stocked Product

KDIC

KD03 - Key Decoder

Decoder for GM, Ford, Chrysler, & Ford 10 Cut

Stocked Product

KD03

KDSC - Key Decoder

Decoder for all Schlage & other (Schlage type) keys using factory increments.

Stocked Product

KD01

Pro-Lok - *Locksmith Tools/Key Tags*

LT1202 - Lock & Safe Scope

This scope throws a strong beam of light, great for reading wafers and safe work.
Made of impact resistant plastic.
Comes with 3 tips, carrying case, batteries, and bulb.
Put one in each truck.

Stocked Product
LT1202
LT1202B - Replacement Bulb

LT1240 HeadSpecs

Multi-Purpose Head-Wearing Magnification Glasses with Dual Light Sources. 4 different magnifying choices and 2 lights built all in one HEADSPEC. Just flip the lens of your choice in any combination to achieve the necessary magnification level.Magnifications available: 1.8x, 2.3x, 3.7x & 4.8x. Ideal forimpressioning, close observations, precision inspections, miniature parts, assembly, coins, stamps, checking circuit boards, reading resistors, detail work, reading and much more! Uses 2 AAA batteries (not included) per light.

Stocked Product
LT1240

LT340 - IC Reykey/Decoder Dump Tool

Several tools in one. Clear chambers and decode. Chamber cap and retainer sleeve staking feature. Holds the key cylinder and provides a place to dump the pins for decoding or disposal. Also acts as a holding fixture for rekeying.

Stocked Product
LT340

LT370 - Follower Master Pin

A versatile follower that can be used for removal of upper chamber master pins (up to .100) with a quick twist.
Can also be used for standard rekeying tasks.
Red anodized, machined aluminum to exacting tolerances.

Stocked Product
LT370

LT371 - Follower Set - 4 Piece

4 different colored aluminum follower tools to easily identify diameter. Two standard size followers, one small and one large diameter combine to offer a set that will service almost any pin tumbler lock. Also available individually.

Stocked Product
LT371

LT422 - White Blank Tag System

Make your own key tags. Goes behind the hooks on your keyboard. Set contains 96 blank tags for you to fill out.

Stocked Product
LT422

LT430 - Service Call/ Dispatch Book

Make it easy to track service calls for dispatch and billing. 3-copy NCR with wraparound cover. Give one copy to dispatcher, one to service tech, and retain permanent copy in book.
200 tickets per book individually numbered.

Stocked Product
LT430

LT470 - 8 Piece Driver Set

Heat treated, chrome plated, chrome vanadium steel shafts with magnetic tips.
High visibility handle, easy to locate.
Net weight 3/4 lbs. (.34kg).

- Curved Hook
- Offset 45° Hook
- 90° Hook
- Straight Pick
- 1/8" Flat Screwdriver
- #0 Phillips Screwdriver
- SD-15 Star Screwdriver
- SD-20 Star Screwdriver

Stocked Product
LT470

Pro-Lok - *Lock Picking Tools/Safe Bits*

LT700 - Standard Impressioning Tool

Impression tool for pin tumbler and wafer locks using a true centerline action. Easy to grip, fits hands comfortably, securely holds the head of the key.

Stocked Product
LT700

PKXGUN-M - Pick-Gun-Manual

The PKX-GUN-M, Manual Pick Gun, is the best pick gun available. Used by locksmiths everywhere, the pick gun allows you to pick a wide variety of locks. Included with the Manual Pick Gun are three tips and a tension wrench.

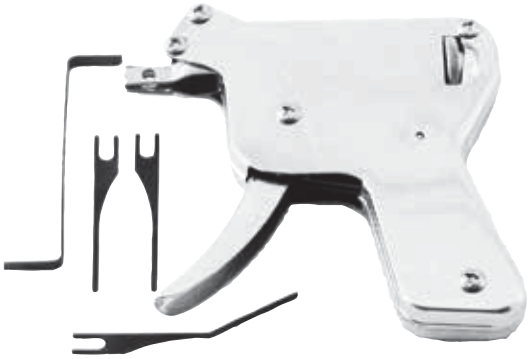

Stocked Product
PKXGUN-M

PKX-TW-R - Pick-Tension Wrench-Rigid

The superior quality PKX-TW-R, Rigid Tension Wrench, is manufactured of tempered stainless steel; deburred and burnished to a soft luster. We use the newest high technology steels and construction methods. Our picks are rust proof, full hard spring stainless steel with smooth rivetless construction making them the strongest most durable picks available.

Stocked Product
PKX-TW-R

Safe Bits

May be used on safes and other materials that are difficult to drill such as concrete and stainless steel etc.
Made in England exclusively for Pro-Lok®

Stocked Product

SB01	3/16" x 31/2"	
SB05	1/4" x 4"	
SB06	1/4" x 6"	
SB11	5/16" x 5"	
SB15	3/8" x 5"	

Entry Armor by Pro-Lok- *Wrap Plates*

Stocked Product

1-1/2" BORE

ITEM #	BACKSET	DOOR THICKNESS	OVERALL SIZE
EWP-111-S	2-3/4"	1-3/4"	4-1/4" x 4-1/2"

Stocked Product

2-1/8" BORE

ITEM #	BACKSET	DOOR THICKNESS	OVERALL SIZE
EWP-160-S	2-3/4"	1-3/4"	4-3/4" x 4-1/2"

EWP-161-S	2-3/4"	1-3/4"	4-3/4" x 9"
EWP-163-S	2-3/4"	1-3/4"	4-3/4" x 12"

EWP-164-PB	2-3/4"	1-3/4"	5" x 14"
EWP-164-S	2-3/4"	1-3/4"	5" x 14"

Stocked Finishes

PB = POLISHED BRASS
S = STAINLESS STEEL

*Stock Finishes Are Listed Under Each Part Number
** Most wrap plates are provided in a clamshell packaging, with full color graphics for retail display.

Entry Armor by Pro-Lok - *Wrap Plates*

EWP-122

EWP-123

EWP-135

EWP-136

EWP-151

Stocked Product

2-1/8" BORE

ITEM #	BACKSET	DOOR THICKNESS	OVERALL SIZE
EWP-120-PB	2-3/8"	1-3/8"	4" x 4-1/2"
EWP-120-S	2-3/8"	1-3/8"	4" x 4-1/2"
EWP-122-AB	2-3/8"	1-3/8"	4" x 4-1/2"
EWP-122-PB	2-3/8"	1-3/4"	4" x 4-1/2"
EWP-122-S	2-3/8"	1-3/4"	4" x 4-1/2"
EWP-130-PB	2-3/4"	1-3/8"	4" x 4-1/2"
EWP-130-S	2-3/4"	1-3/8"	4" x 4-1/2"
EWP-132-PB	2-3/4"	1-3/4"	4-1/4" x 4-1/2"
EWP-132-S	2-3/4"	1-3/4"	4-1/4" x 4-1/2"
EWP-121-PB	2-3/8"	1-3/8"	4" x 9"
EWP-121-S	2-3/8"	1-3/8"	4" x 9"
EWP-123-AB	2-3/8"	1-3/4"	4" x 9"
EWP-123-PB	2-3/8"	1-3/4"	4" x 9"
EWP-123-S	2-3/8"	1-3/4"	4" x 9"
EWP-131-PB	2-3/8"	1-3/8"	4-1/4" x 9"
EWP-131-S	2-3/8"	1-3/8"	4-1/4" x 9"
EWP-133-AB	2-3/4"	1-3/4"	4-1/4" x 9"
EWP-133-PB	2-3/4"	1-3/4"	4-1/4" x 9"
EWP-133-S	2-3/4"	1-3/4"	4-1/4" x 9"
EWP-134-S	2-3/4"	1-3/4"	5" x 12"
EWP-135-S	2-3/4"	1-3/4"	5" x 14"
EWP-136-PB	2-3/4"	1-3/4"	5" x 20"
EWP-136-S	2-3/4"	1-3/4"	5" x 20"
EWP-151-PB	5"	1-3/4"	6-1/2" x 9"

Stocked Finishes

AB = ANTIQUE BRASS
PB = POLISHED BRASS
S = STAINLESS STEEL

*Stock Finishes Are Listed Under Each Part Number
** Most wrap plates are provided in a clamshell packaging, with full color graphics for retail display.

Entry Armor by Pro-Lok - *Wrap Plates*

Stocked Product

1-1/2" TOP BORE, 2-1/8" BOTTOM BORE

ITEM #	BETWEEN HOLES	BACKSET	DOOR THICKNESS	OVERALL SIZE
EWP-200-S	4"	2-3/8"	1-3/8"	4" x 9"
EWP-210-PB	4"	2-3/8"	1-3/4"	4-1/4" x 9"
EWP-210-S	4"	2-3/8"	1-3/4"	4-1/4" x 9"

2-1/8" TOP BORE, 2-1/8" BOTTOM BORE

ITEM #	BETWEEN HOLES	BACKSET	DOOR THICKNESS	OVERALL SIZE
EWP-221-PB	3-5/8"	2-3/8"	1-3/4"	4" x 9"
EWP-225-PB	3-5/8"	2-3/4"	1-3/4"	4-1/4" x 9"

EDGE GUARDS

ITEM #	DOOR THICKNESS	OVERALL SIZE
EWP-230-PB	1-3/8"	4-1/2" x 1"

*** Not Retail Packaged**

Stocked Finishes

PB = POLISHED BRASS
S = STAINLESS STEEL

*Stock Finishes Are Listed Under Each Part Number PB = POLISHED BRASS S = STAINLESS STEEL
** Most wrap plates are provided in a clamshell packaging, with full color graphics for retail display.

Entry Armor by Pro-Lok - *Wrap Plates*

EWP-251

EWP-252

BLANK

Stocked Product

ITEM #	HOLE SIZE	BACKSET	DOOR THICKNESS	OVERALL SIZE	DESCRIPTION
EWP-251-S	1-1/2"	2-3/4"	1-3/4"	5" x 12"	1-1/4" x 8" face plate, 1-5/8" x 7-5/16" side prep
EWP-252-PB	Blank	N/A	1-3/4"	5" x 12"	86 cut out, 1-1/4" x 8" face plate, blank
EWP-252-S	Blank	N/A	1-3/4"	5" x 12"	86 cut out, 1-1/4" x 8" face plate, blank

BLANKS

ITEM #	HOLE SIZE	BACKSET	DOOR THICKNESS	OVERALL SIZE
EWP-291-PB	N/A	N/A	1-3/4"	4-1/4" x 4-1/2"
EWP-291-S	N/A	N/A	1-3/4"	4-1/4" x 4-1/2"
EWP-293-PB	N/A	N/A	1-3/4"	4-1/4" x 9"
EWP-293-S	N/A	N/A	1-3/4"	4-1/4" x 9"
EWP-294-S	N/A	N/A	1-3/4"	5" x 12"

Stocked Finishes

PB = POLISHED BRASS
S = STAINLESS STEEL

Entry Armor by Pro-Lok – *Specialty Wrap Plates*

Alarm Lock T2 & T3
1-3/4" Door Thickness
2-3/4" Backset
5" x 14"

Stocked Product
EWP-300-PB

Simplex & Kaba from Knob Mortise
1-3/4" Door Thickness
2-3/4" Backset
5" x 9"

Stocked Product
EWP-661-S

Medeco & Marks Levers
1-3/4" Door Thickness
2-3/4" Backset
4-3/4" x 5-1/2"

Stocked Product
EWP-541-S

Sargent 6500 Series
1-3/4" Door Thickness
2-3/4" Backset
4-3/4" x 9"

Stocked Product
EWP-671-S

Marks I-Q
1-3/4" Door Thickness
2-3/4" Backset
5" x 15"

Stocked Product
EWP-542-S

Schalge Cobra
1-3/4" Door Thickness
2-3/4" Backset
5" x 12"

Stocked Product
EWP-680-S

Simplex & Kaba from Knob Lock
1-3/4" Door Thickness
2-3/4" Backset
5" x 9"

Stocked Product
EWP-660-S

Stocked Finishes
PB = POLISHED BRASS
S = STAINLESS STEEL

Entry Armor by Pro-Lok – *Latch Protectors*

Latch Protector - 7" Interlocking

- Designed for in-opening doors
- Deters spreading the door from the frame
- Compatible with deadbolts and locksets
- Size: 7" x 5/8"
- 10/box

Stocked Product
ELP-100-B
ELP-100-C
ELP-100-DU

Latch Protector - 12" Interlocking

- Designed for in-opening doors
- Deters spreading the door from the frame
- Compatible with deadbolts and locksets
- Size: 12" x 5/8"
- 10/box

Stocked Product
ELP-110-B
ELP-110-C
ELP-110-DU

Latch Protector - T Style

- Designed for use on in and out-opening doors
- Deters tampering of bolt and latch
- Size: 6" x 1-13/16"
- 10/box

Stocked Product
ELP-120-AL

Latch Protector - 6" Center Rose

- Protect the latch or deadbolt
- For out-opening doors
- Compatible with deadbolts, and locksets
- Size: 6" x 1-13/16"
- 10/box

Stocked Product
ELP-200-AL
ELP-200-C

Latch Protector - 7" x 3" Center Rose

- Designed for out-opening doors
- Accepts up to a 3-1/2" rose
- For right or left handed doors
- Compatible with deadbolts, and locksets
- 22/box

Stocked Product
ELP-210-AL ELP-210-B
ELP-210-DU ELP-210-S

Latch Protector - 11" x 3" Center Rose

- Designed for out-opening doors
- Accepts up to a 3-1/2" rose
- For right or left handed doors
- For all backsets, deadbolts, and locksets
- 10/box

Stocked Product
ELP-220-AL ELP-220-B
ELP-220-DU ELP-220-S

Latch Protector - 11" x 3" Left Handed

- Designed for out-opening doors
- Accepts up to a 3-1/2" rose
- For left handed doors
- For all backsets, deadbolts, and locksets
- 10/box

Stocked Product
ELP-221-DU
ELP-221-S

Latch Protector - 11" x 3" Right Handed

- Designed for out-opening doors
- Accepts up to a 3-1/2" rose
- For right handed doors
- Compatible with deadbolts and locksets
- 10/box

Stocked Product
ELP-222DU
ELP-222S

Latch Protector - Narrow Stile Door

- Designed for out-opening doors
- 10/box

Stocked Product
ELP-310-AL
ELP-310-DU

Stocked Finishes

AL = ALUMINUM B = BRASS C = CHROME
DU = DURONODIC S = STAINLESS STEEL

Entry Armor by Pro-Lok – *Latch Protectors*

Latch Protector w/ no pin
13" x 3-5/8"

- Accommodates a wide variety of locks
- Includes 1 spacer to adjust offset between door and jamb
- Designed for out-opening doors
- 15/box

Stocked Product
ELP-240-DU
ELP-240-S

Latch Protector w/ no pin
11" x 3"

- Accommodates a wide variety of locks
- Includes 1 spacer to adjust offset between door and jamb
- Designed for out-opening doors
- 15/box

Stocked Product
ELP-250-AL
ELP-250-DU
ELP-250-S

Latch Protector w/ 1 pin
13" x 3-5/8"

- Accommodates a wide variety of locks
- Includes 1 spacer to adjust offset between door and jamb
- Designed for out-opening doors
- 15/box

Stocked Product
ELP-240-1-DU
ELP-240-1-S

Latch Protector w/ 1 pin
11" x 3"

- Accommodates a wide variety of locks
- Includes 1 spacer to adjust offset between door and jamb
- Designed for out-opening doors
- 15/box

Stocked Product
ELP-250-1-DU
ELP-250-1-S

Latch Protector w/ 2 pins
13" x 3-5/8"

- Accommodates a wide variety of locks
- Includes 1 spacer to adjust offset between door and jamb
- Designed for out-opening doors
- 15/box

Stocked Product
ELP-240-2-DU
ELP-240-2-S

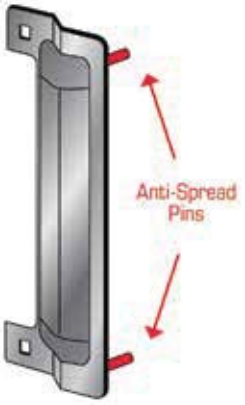

Latch Protector w/ 2 pin
11" x 3"

- Accommodates a wide variety of locks
- Includes 1 spacer to adjust offset between door and jamb
- Designed for out-opening doors
- 15/box

Stocked Product
ELP-250-2-DU
ELP-250-2-S

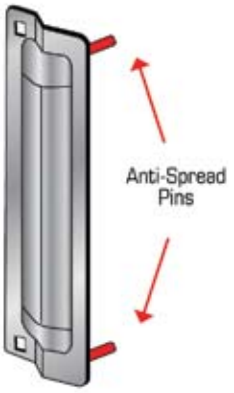

Stocked Finishes

AL = ALUMINUM
DU = DURONODIC
S = STAINLESS STEEL

Entry Armor by Pro-Lok – *Strike Plates*

Strike Plate - "T"
- Size: 1-1/8" x 2-3/4"
- Replaces old strike plates
- Fits in standard "T" cut out
- Screws provided
- 10/box

Stocked Product

ESP-100-B	Brass

Strike Plate - Full Lip
- Size: 2-1/4" x 1-1/8"
- Replaces standard strike plates
- Fits in standard residential holes
- Wood screws provided
- 25/box

Stocked Product

ESP-104-AB	Antique Brass
ESP-104-B	Brass
ESP-104-C	Chrome

Strike Plate - Large Lip
- Size: 4-7/8" x 1-1/4"
- Covers smaller strike plate holes
- 2-1/2" long screws for added security
- 10/box

Stocked Product

ESP-120-C	Chrome
ESP-120-B-BULK	Brass (poly-bagged)

Strike Plate - 6" Security
- Size: 6" x 1-1/8"
- Six 1-1/2" long screws included for additional holding power
- 10/box

Stocked Product

ESP-140-C	Chrome

Stocked Finishes

AB = ANTIQUE BRASS
B = BRASS
C = CHROME

Strike Plate - 7-3/4" Security
- Size: 7-3/4" x 1-5/8"
- Reinforces door jamb for added strength and security
- Deters tampering and kick-ins
- Includes 1-1/4" and 3" long screws
- 10/box

Stocked Product

ESP-141-B	Brass

Strike Plate - 6" Security
- Size: 6" x 1-1/8"
- Reinforces door jamb for added strength and security
- Deters tampering and kick-ins
- Includes 1-1/4" and 3" long screws
- 10/box

Stocked Product

ESP-142-B	Brass

Strike Plate - 4-7/8" Security
- Size: 4-7/8" x 1-1/4"
- Reinforces door jamb for added strength and security
- Deters tampering and kick-ins
- Includes 1-1/4" and 3" long screws
- 10/box

Stocked Product

ESP-143-B	Brass

Strike Plate - Mortise
- Size: 4-7/8" x 1-1/4"
- Bulk packaged 1/poly bag
- 50/box

Stocked Product

ESP-170-C-BULK	Chrome (poly-bagged)

Strike Plate - Small Adjustable
- Size: 2-3/4" x 1-1/8"
- Adjustable plate allowing for a tighter fit of the door to the frame and weather stripping
- 10/box

Stocked Product

ESP-180-B	Brass

Entry Armor by Pro-Lok – *Security Hardware*

Adaptor Plate - 2-5/8”

- Covers up wood damage around lock
- For mortise and rim cylinders
- 1-1/4” inside hole diameter
- 2-5/8” outside diameter
- Includes 1 part
- 10/box

Stocked Product

EAP-100-B	Brass

Adaptor Plate - 2-3/4”

- Changes 2-1/8” bore to 1-1/2” bore
- Covers up wood damage around lock
- 1-1/2” inside hole diameter
- 2-3/4” outside diameter
- Includes 2 parts
- 25/box

Stocked Product

EAP-110-B	Brass
EAP-110-C	Chrome

Adaptor Plate - 3-1/2”

- Covers up wood damage around lock
- For locks with a 2-1/8” bore
- Convert 2-3/8” to 2-3/4” backset
- Allows for use on Grade 1 key-in-lever locks on 1-3/8” door
- 2-1/8” inside hole diameter
- 3-1/2” outside diameter
- Includes 2 part
- 25/box

Stocked Product

EAP-120-AB	Antique Brass
EAP-120-B	Brass
EAP-120-C	Chrome

Hole Cover - 2-5/8”

- Hole cover for 1-1/2” or 2-1/8” holes
- 5/box

Stocked Product

EHC-100-B	Brass
EHC-100-PC	Prime Coat

Knob Set - Brass w/Spindle

- Solid brass knob set
- Spindle included
- 5/box packaged

Stocked Product

EDK-100-PB	Polished Brass

Filler Plate - 8” x 1-1/4”

- Converts 86 cut out to 161 prep
- 3/8” off center line
- Bulk packaged, 1/poly bag
- 25/box

Stocked Product

EFP-100-PC	Prime Coat

Filler Plate - 4-7/8” x 1-1/4”

- Size 4-7/8” x 1-1/4”
- Bulk packaged, 1/poly bag
- 25/box

Stocked Product

EFP-110-PC	Prime Coat
EFP-110-B	Brass

Filler Plate - 2-1/4” x 1-1/8”

- Size 2-1/4” x 1-1/8”
- Filler plates for 161 cut-out
- Bulk packaged, 1/poly bag
- 25/box

Stocked Product

EFP-120-PC	Prime Coat

Filler Plate - 8” x 1-1/4”

- Size 8” x 1-1/4”
- Filler plates for 86 mortise lock cut-out
- Bulk packaged, 1/poly bag
- 25/box

Stocked Product

EFP-130-PC	Prime Coat

Filler Plate - 2-1/4” x 1”

- Size 2-1/4” x 1”
- Filler plates for 160 cut-out
- Bulk packaged, 1/poly bag
- 25/box

Stocked Product

EFP-131-PC	Prime Coat

Entry Armor by Pro-Lok – *Security Hardware*

Door Guard - Swing Bar

- Size: 2-1/2" x 4"
- Works on in-opening doors
- 10/box

Stocked Product

EDL-100-B	Brass
EDL-100-C	Chrome

Door Viewer - 190° 1/2" Medium

- Wide angle clear lens
- Scratch proof lens
- Moist/water proof
- For doors 1-3/8" to 2" thick
- 1/2" barrel diameter
- 10/box

Stocked Product

EDV-120-C	Chrome
EDV-120-PB	Polished Brass

Door Guard - Chain 3-5/8"

- Size: 2-1/4" x 4-1/4"
- For wood or metal doors
- Extra long screws included
- 10/box

Stocked Product

EDL-110-AB	Antique Brass
EDL-110-B	Brass

Door Viewer - 160° 1" Large

- Super wide view lens
- Scratch proof lens
- Moist/water proof
- For doors 1-3/8" to 2" thick
- 1" barrel diameter
- 10/box

Stocked Product

EDV-130-PB	Polished Brass

Door Guard - Key Locked

- Size: 2-1/4" x 4-1/4"
- Lock and unlock from the inside and outside
- Key lock with 2 keys included
- 7/box

Stocked Product

EDL-130-B	Brass

Hasp Lock - 4-1/2

- Size: 4-1/2" x 1-1/2"
- For in-opening doors
- Left or right handed doors
- Available keyed alike or keyed different
- 10/box

Stocked Product

ELK-110-C	Chrome

Door Viewer - 160° 1/2" Small

- Clear lens
- Scratch proof lens
- Moist/water proof
- For doors 1-3/8" to 2" thick
- 1/2" barrel diameter
- 10/box

Stocked Product

EDV-100-PB	Polished Brass

Hasp Lock - 2-1/2

- Size: 2-1/2" x 1-1/2"
- Use on doors, gates, trunks, or boxes
- Keyed for additional protection
- Available keyed alike or keyed different
- 10/box

Stocked Product

ELK-111-C	Chrome

Entry Armor by Pro-Lok – *Security Hardware*

Patio Door Lock - Lever

- 2" X 5/8"
- Inside and outside sliding doors
- Locks door in fully closed and ventilation position
- 10/box

Stocked Product

EPL-100-AL	Aluminum

Patio Door Lock - Keyed Large Rectangle

- Size: 6" x 1-1/8"
- Heavy-duty steel bolt
- Use on inside and outside sliding doors
- Key lock with 2 keys
- 10/box

Stocked Product

EPL-106-AL	Aluminum
EPL-106-W	White

Patio Door Lock - Top Knob

- Size: 1-1/2" x 2-1/4"
- Inside and outside sliding doors
- Locks door in fully closed and ventilation position
- 10/box

Stocked Product

EPL-101-AL	Aluminum
EPL-101-W	White

Patio Door Lock - No Key Large Rectangle

- Size: 6" x 1-1/8"
- Heavy-duty steel bolt
- Use on inside and outside sliding doors
- No key required
- 10/box

Stocked Product

EPL-108-W	White

Patio Door Lock - Pull Pin

- Size: 2" x 1-3/4"
- Inside and outside sliding doors
- Locks door in fully closed and ventilation position
- 10/box

Stocked Product

EPL-102-AL	Aluminum

Patio Door Lock - Pin

- 3-1/4" length
- Lock and unlock door quickly
- Pin locks in place
- Cut to length
- 10/box

Stocked Product

EPL-110-AL	Aluminum

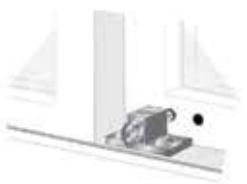

Patio Door Lock - Keyed

- Size: 1-1/8" x 1-3/4"
- Inside and outside sliding doors
- Locks door in fully closed and ventilation position
- Keyed lock with 2 keys
- 10/box

Stocked Product

EPL-104-AL	Aluminum

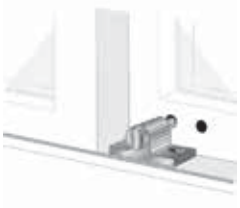

Patio Door Lock - Side Knob

- Size: 2" x 2-1/4"
- Inside and outside sliding doors
- Locks door in fully closed and ventilation position
- 20/box

Stocked Product

EPL-111-AL	Aluminum

Entry Armor by Pro-Lok – *Window Locks*

EWL-100

Window Lock - Single
Wing Nut

- Works on top and bottom tracks
- 1 wing nut
- Aluminum
- 10/box

Stocked Product

EWL-100

EWL-120

Window Lock - Lever

- Easy to use lever
- Works on most sliding windows
- No tools required for installation
- Aluminum
- 10/box

Stocked Product

EWL-120

EWL-111

Window Lock - Wood
Sash Keyed

- Key locking prevents breaking the glass and easily unlocking the window
- Locks and unlocks quickly
- 2 keys included
- Brass
- 10/box

Stocked Product

EWL-111

EWL-150

Window Lock - Double
Wing Nut

- Works on top and bottom tracks
- 2 wing nuts
- Aluminum
- 10/box

Stocked Product

EWL-150

Residential–*Astragals*

350

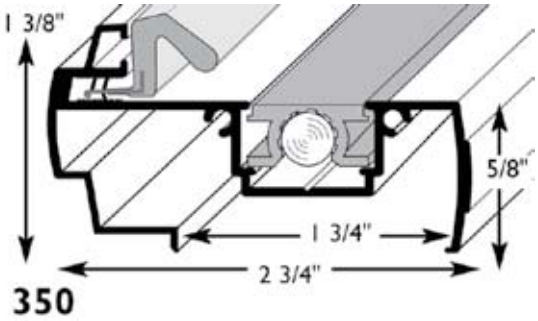

353
Double Door Astragal Outswing

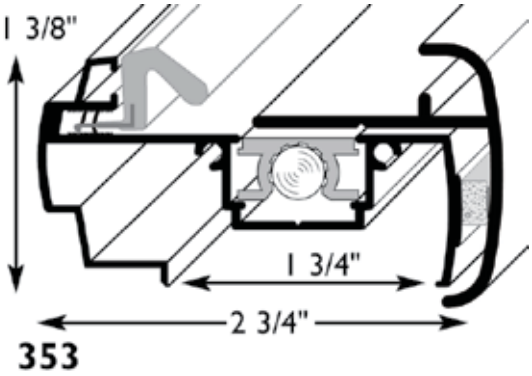

T-ASTRAGAL SHOE

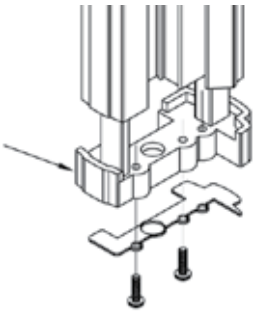

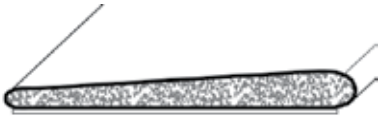

CORNER SEAL PAD

Stocked Product

Part #	Description	Finish
10304	T Astragal with Flush Bolt 6'8"	Aluminum
10305	T Astragal with Flush Bolt 6' 8"	Bronze
10283	T Astragal with Flush Bolt 6'8"	White
10303	T Astragal with Flush Bolt 6'8"	Bright Gold
10313	T Astragal with Flush Bolt 8'	Bronze
10311	T Astragal with Flush Bolt 8'	White
10312	T Astragal with Flush Bolt 8'	Aluminum
10316	T Astragal with Flush Bolt 8'	Bright Gold
06558	T Astragal Shoe Left	
06560	T Astragal Shoe Right	
10272	Corner Seal pad	White
10287	Astragal 6' 8" 353	Aluminum
10288	Astragal 8' 353	Aluminum
10290	Astragal 6' 8" 353	Bronze
10291	Astragal 8' 353	Bronze
10294	Astragal 6' 8" 353	White
10296	Astragal 8' 353	White

Residential–*Sills*

ADJUSTABLE SILL

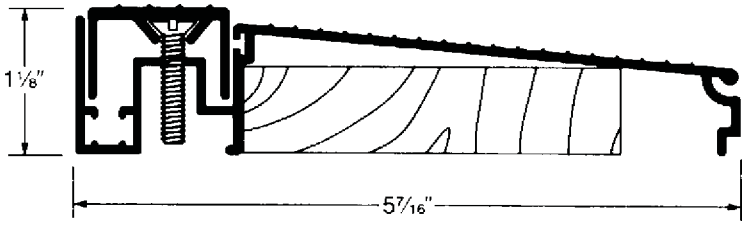

SILL EXTENDER

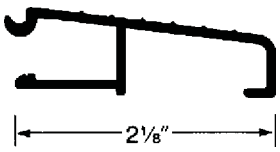

FIXED SILL

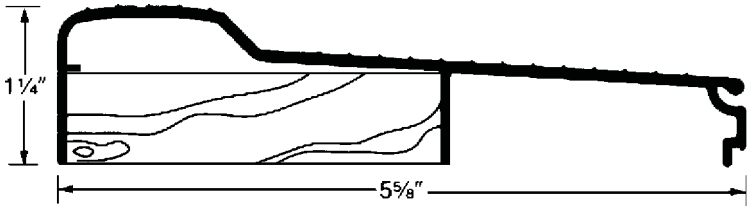

OUTSWING SILL

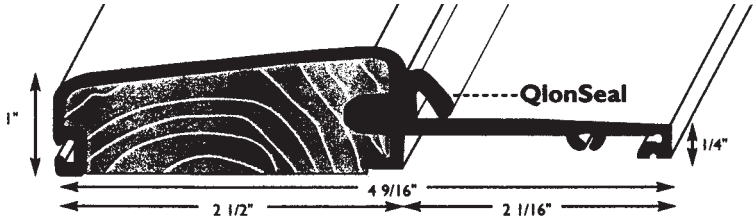

O/S SILL EXTENDER

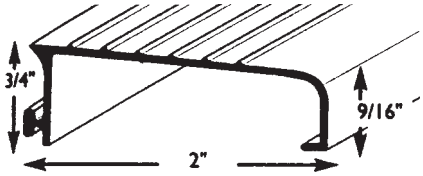

Stocked Product

Description	Finish	Sizes
1-1/8" X 5-5/8"Adjustable Sill	Aluminum	2/6,2/8,3/0,6/0
1-1/8" X 5-5/8"Adjustable Sill	Bronze	2/6,2/8,3/0,6/0
1" X 4-9/16" Out Swing Sill	Aluminum	2/6,2/8,3/0,6/0,12/4
1" X 4-9/16" Out Swing Sill	Bronze	2/6,2/8,3/0,6/0,12/4
3/4" X 2" O/S Sill Extender	Aluminum	2/8,3/0,6/0,12/4
3/4" X 2" O/S Sill Extender	Bronze	2/8,3/0,6/0,12/4
1-1/4" X5-5/8"Fixed Sill	Aluminum	2/6,2/8,3/0,6/0,12/4
1-1/4" X5-5/8"Fixed Sill	Bronze	2/6,2/8,3/0,6/0,12/4
1-1/4" X5-5/8"Fixed Sill	Bright Gold	3/0,6/0,12/4
1-1/4" X5-5/8"Fixed Sill	White	3/0,6/0,12/4
2-1/8" Sill Extender	Aluminum	3/0,6/0,12/4
2-1/8" Sill Extender	Bronze	3/0,6/0,12/4
2-1/8" Sill Extender	Bright Gold	3/0,6/0,12/4
2-1/8" Sill Extender	White	3/0,12/4

Residential–*Weatherseals*

For Metal or Wood Entry Doors and French-type Patio Doors

Model *QEBD 650*

Schlegel Q-LON weatherseal mounts easily and outperforms other kerf-fitted doorseals

- Highly engineered embossed polyethylene liner resists paint and varnish, lasts longer and maintains an attractive appearance.
- UV stabilized to withstand sunlight with no visible degradation
- Open-celled urethane foam core maintains shape and resiliency over time, offers excellent all-temperature sealing performance, prevents corner leaks and allows seal to conform to uneven surfaces.
- Tri-fin insert allows for easy installation and maximum retention. Can be easily removed and reinserted without damaging jamb or seal.
- **Schlegel Q-LON - the most recognized, most asked for name in kerf-fitted weatherseals.**

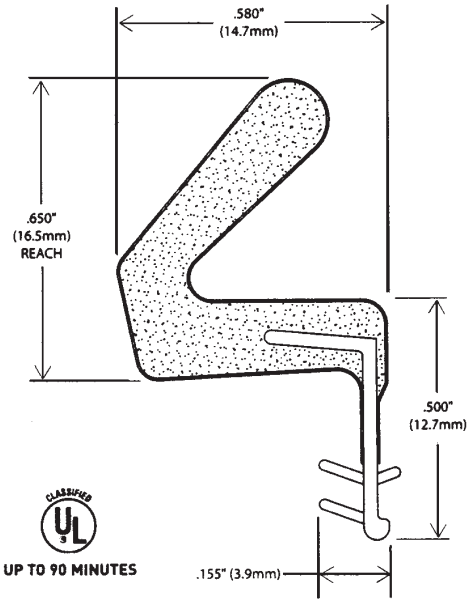

Stocked Product

Part #	Description	Finish
10314	Weather Strip 3/0	Bronze
10310	Weather Strip 6/8	Bronze
10317	Weather Strip 8/0	Bronze
10318	Weather Strip 3/0	White
10325	Weather Strip 6/8	White
10320	Weather Strip 8/0	White

Box Quantities Only

6/8 Uprights sold as 75 pair (150 pieces) per box
8/0 Uprights sold as 60 pair (120 pieces) per box
Heads sold as 300 each to a box

Kwickset

334 Passage, 335 Privacy – Pocket Door Locks

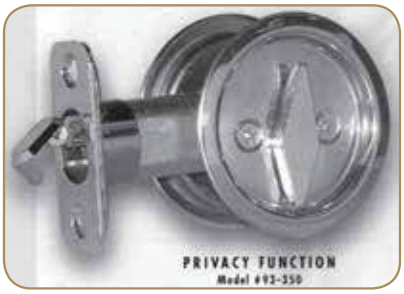

Specifications:

Bore	2-1/8" face, 1" edge
Backset	2-3/8"
Door Thickness	1-3/8" - 1-3/4"
Warranty	Lifetime mechanical, 10 year finish
Latchbolt	1" x 2-1/4" round corner
Strike	1-1/8" x 2-1/4" square corner with strike box, brass
Aluminum	1-1/8" X 5-5/8"Adjustable Sill
Bronze	1-1/8" X 5-5/8"Adjustable Sill

Stocked Product

334 US3,10B,15, 15A, 3x26 Disc.
335 US3,10B,15

Features:

- Installs with standard lockset boring - no notching
- Deep cups for easy access
- Keeps door warranty
- Large privacy turn piece

Rixson

27 3/4" Offset - Heavy-Duty Offset Hung Floor Closers

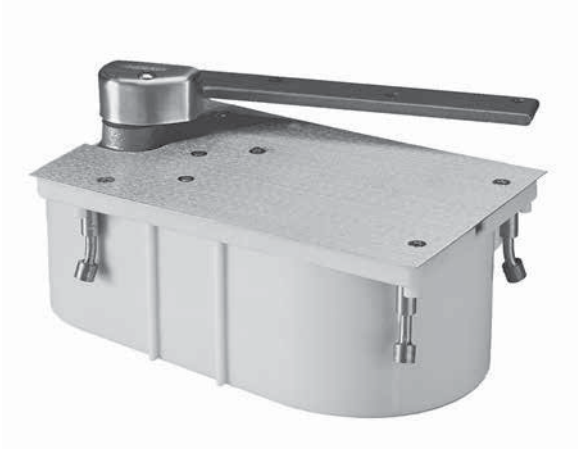

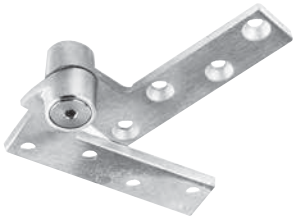

Application
- Single Acting, Handed
- Exterior or Interior Doors
- Weight to 450 lbs.*
- Door Width up to 4'0" (1219mm)

Product Description & Features

- Built-in positive dead stop prevents door from swinging beyond the desired opening degree (specify 90°, 105°)
- Separate and independent valves for closing speed, latch speed and backcheck
- Available selective hold open (S) at same degree as dead stop
- Models available to meet ICC/ANSI 117.1 low opening force requirements, prefix "PH". (For 8-1/2 lbs. of opening force prefix PH and suffix 8-1/2 lbs.) Special Order.
- Available 1-1/2" offset, for doors with cladding or frames with applied molding, maximum door weight 250 lbs. Special Order.
- Cycolac, rustproof cement case
- Vertical door adjustment
- Standard top pivot: #180 included
- Intermediate pivot(s) required: M19 (order separately)
- Doors up to 90" (2286mm) in height should use one intermediate pivot. Each additional 30" (762mm) warrants another intermediate pivot
- Furnished with wood and machine screws

Technical Information

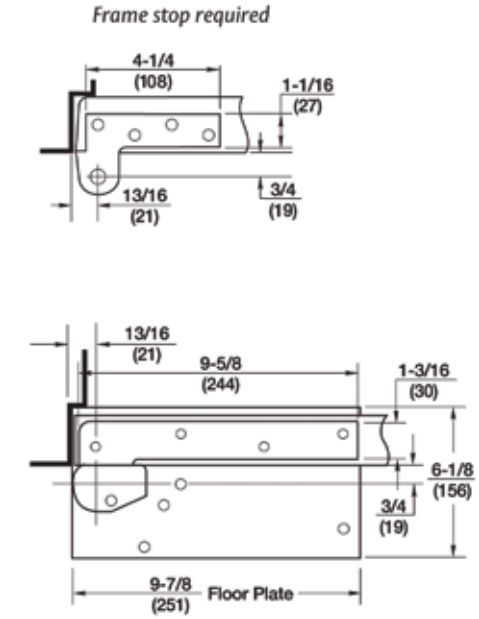

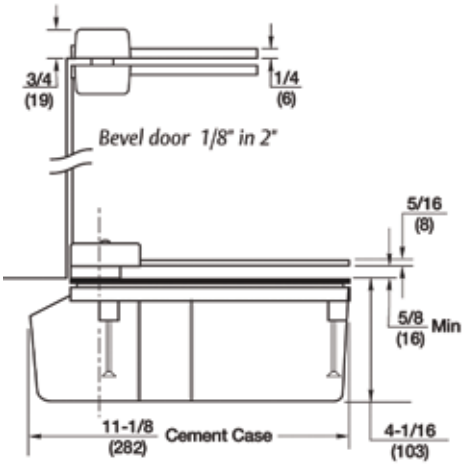

Stocked Product

Part #	Opening	Option	Description
27	90	*S	RH Less all parts
27	90	*S	LH Less all parts
27	90	*S	RH 626 Finish complete
27	90	*S	LH 626 Finish complete
27	105	*S	RH 626 Finish complete
27	105	*S	LH 626 Finish complete

*Selected Hold Open - Suffix S. these closers can be set to hold open or non hold open.

Complete Closers include: closer body, top pivot (180) arm package, floor cover plate, and cement case

Rixson

Model 28 - Heavy-Duty Single-Acting Center Hung Floor Closers

Application
- Single Acting, Handed
- Exterior or Interior Doors
- Weight to 350 lbs.
- Centering Arm
- Sizes up to 4'0"x8'6"* (1219mmx2591mm)

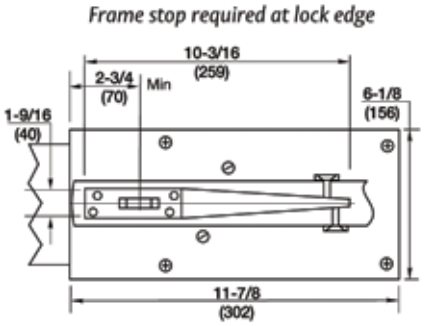

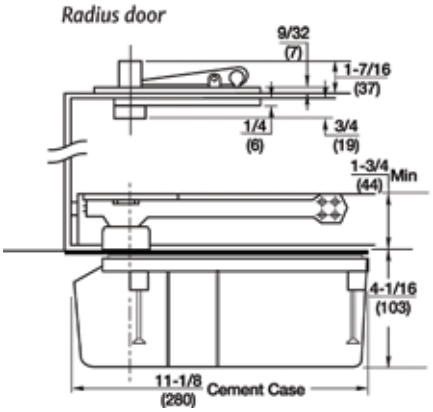

Product Description & Features
- Centering arm with adjustment screws in faces of door
- Built-in positive dead stop prevents door from swinging beyond the desired opening degree (90°)
- Separate and independent valves for closing speed, latch speed and backcheck
- Selective hold open (S) at same degree as dead stop
- Delayed action option – prefix "DA" (non-hold open closers only)
- Models available to meet ICC/ANSI A117.1 low opening force requirements, prefix "PH". (For 8-1/2 lbs. of opening force prefix "PH" and suffix "8-1/2 lbs.")
- Cold weather fluid option – specify "CWF" (not available for closers with "DA")
- Sealed closer option – specify "SC"
- Available with floor plate or threshold installation (floor plate shown)
- Cycolac, rustproof cement case
- Arm reinforcement bracket for wood doors – prefix "W"
- Standard top pivot: #340 included
- Not allowed for fire rated doors
- Frame stop required on the header at the lock side. If not supplied by frame manufacturer, recommend use of 60131
- Furnished with wood and machine screws
- Extended spindles available in 1/2" increments up to 2" longer than standard

Stocked Product

Part #	Description
28S LAP HD	90 FLR CLSR BODY RH
28S LAP HD	90 FLR CLSR BODY LH

Rixson

Model M19 - Intermediate Pivots

Application
- Full Mortise
- Handed

Technical Information

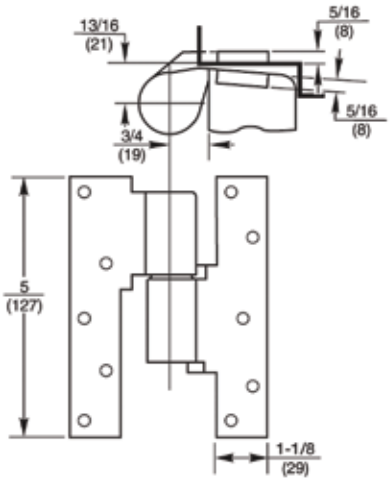

Product Description & Features
- M19, bushing, not load-bearing
- Maintains door alignment
- Aids in installing floor closers and bottom pivots
- Non-ferrous base material
- 3/4" offset standard
- On labeled for fire doors NFPA80 requires an intermedi every additional 30" (762mm) of door height over 60"
- For 20-minute label suffix "-20" to the part number
- Furnished with wood and machine screws

Stocked Product

Part #	Description	Finish
M19	RH	626
M19	LH	626

Also available electrified:

Model E-M19 - 3/4" Offset Power Transfer Pivot - 4 Wire

Application
- Offset Hung
- Electric Pivot for Power Transfer
- Handed

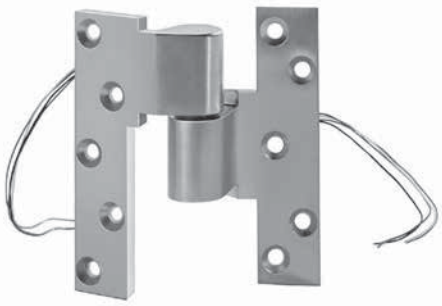

Whenever power transfer pivots are used, the leaves must not be separated

Technical Information

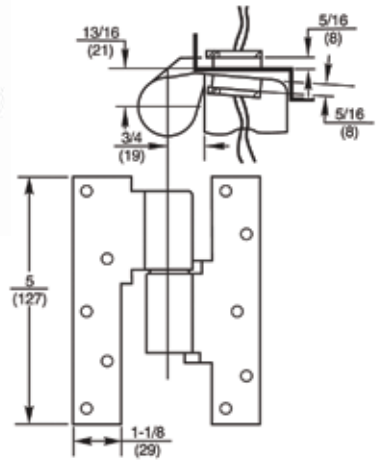

Product Description & Features
- Not load-bearing
- Door and jamb portion are factory assembled and cannot be separated
- Always use M19 intermediate pivot to install door
- Specify four, six, eight or twelve wires
- 24-gauge wire is rated at 2 amps for low voltage, class II wiring applications
- 3/4" (19mm) offset
- Available 1-1/2" offset Special Order.
- Furnished with wood and machine screws
- 4 wire

Stocked Product

Part #	Description	Finish
EM19	RH	626
EM19	LH	626

Hardwiring Made Easy®
LynX

Rixson

Model 117

Application
Interior Doors
Weight to 300 lbs.*
Door Width up to 3'6" (1067mm)
Handed

Product Description & Features

- Standard top pivot 180 included
- 119 intermediate pivot recommended (order separately)
- Bottom pivot mortised into floor
- Available for fire door assemblies up to three hours – specify F117. Intermediate pivot required by UL. Specify FM19, (order separately)
- For 20-minute label suffix "–20" to the part number
- Non-ferrous base material
- Doors up to 90" (2286mm) in height should use one intermediate pivot. Each additional 30" (762mm) of door height warrants another intermediate pivot
- 3/4" (19mm) offset (measured from centerline of pivot to face of door)
- Available for 1-1/2" (38mm) offset (door weight 150lbs) for doors with cladding or frame molding.
- Door edges must be beveled 1/8" in 2"
- Furnished with wood and machine screws
- Extended spindles available in 1/2" (13mm) increments up to 2" (51mm) longer than standard
- Doors will swing 180°, trim permitting

Technical Information

Frame stop required

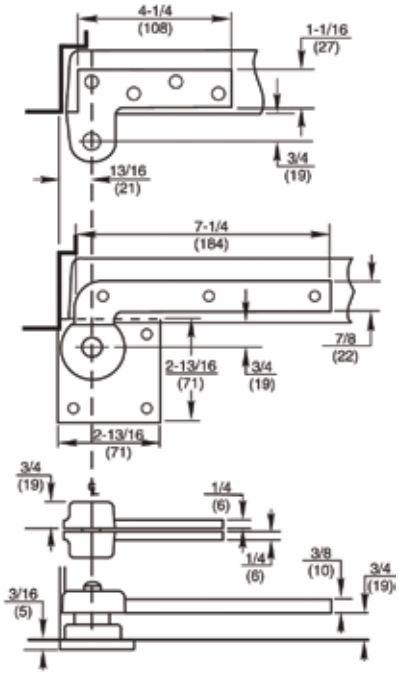

Stocked Product

Part #	Description	Finish
117	RH	626
117	LH	626

Rixson

Model 127-3/4 - Center Hung Pivot Set

Application
Interior Doors
Weight to 200 lbs.
Door Sizes up to 3'6"x 8'6"
Non-handed

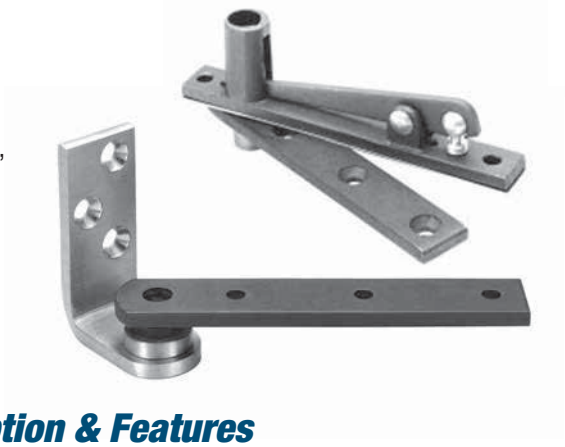

Technical Information

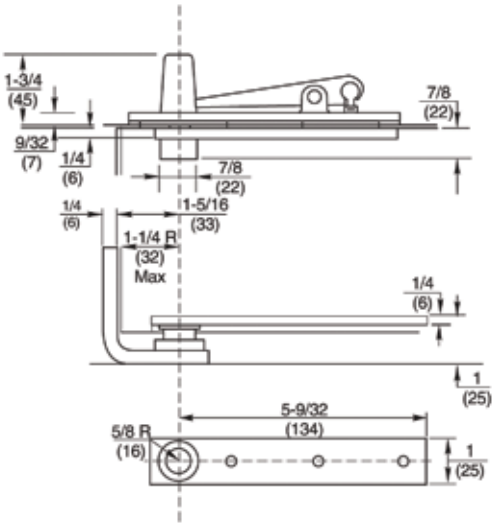

Product Description & Features

- Standard top pivot 320 included
- Bottom pivot mortised into side jamb
- Weight of door borne by floor
- Pivot point centered in thickness of door
- Door must have radius on pivot edge
- Not allowed for use on labeled doors and frames
- Furnished with wood and machine screws

Stocked Product

Part #	Finish
127	626

Model 128-3/4 - Center Hung Pivot Set

Application
Interior Doors
Weight to 250 lbs.
Door Sizes up to 3'6"x 8'6"
Non-handed

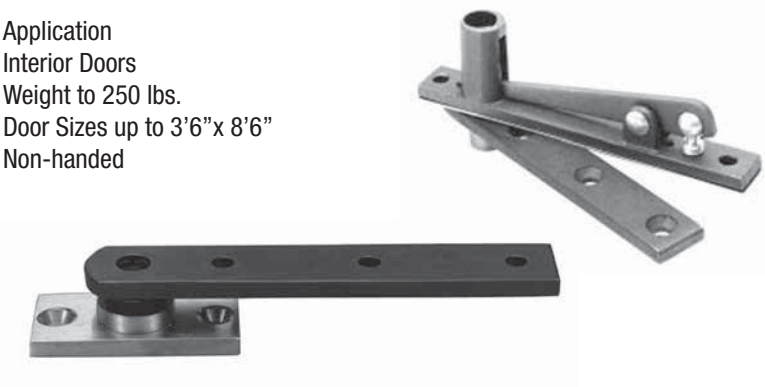

Technical Information

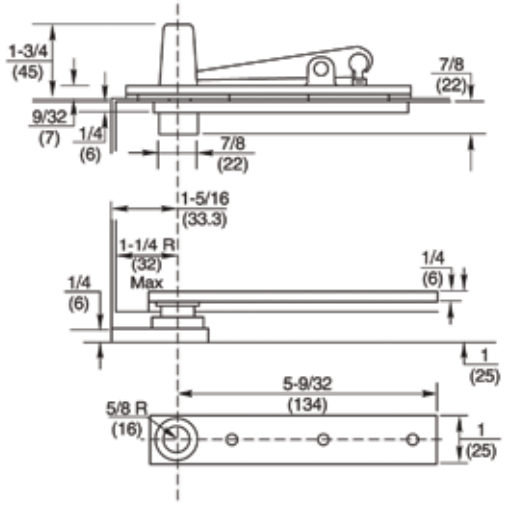

Product Description & Features

Identical to the 127-3/4 except:

- Bottom pivot mounts directly to floor

Stocked Product

Part #	Finish
128	626

Rixson

Model 147 - Offset Hung Pivot Sets

Application
Exterior or Interior Doors
Weight to 600 lbs.*
Door Width up to 4'0" (1219mm)
Handed

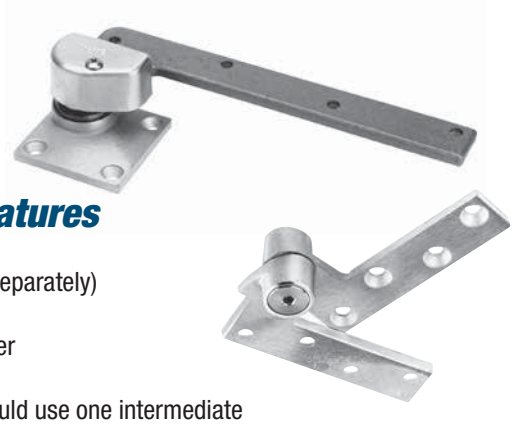

Product Description & Features

- Standard top pivot 180 included
- M19 intermediate pivot required (order separately)
- Bottom pivot mounts directly to floor
- Uses same arm and cap as 27 floor closer
- Non-ferrous base material
- Doors up to 90" (2286mm) in height should use one intermediate pivot. Each additional 30" (762mm) of door height warrants another intermediate pivot
- 3/4" (19mm) offset (measured from centerline of pivot to face of door)
- Door edges must be beveled 1/8" in 2"
- Furnished with wood and machine screws
- Doors will swing 180°, trim permitting

Stocked Product

Part #	Description	Finish
147	RH	626
147	LH	626

Technical Information

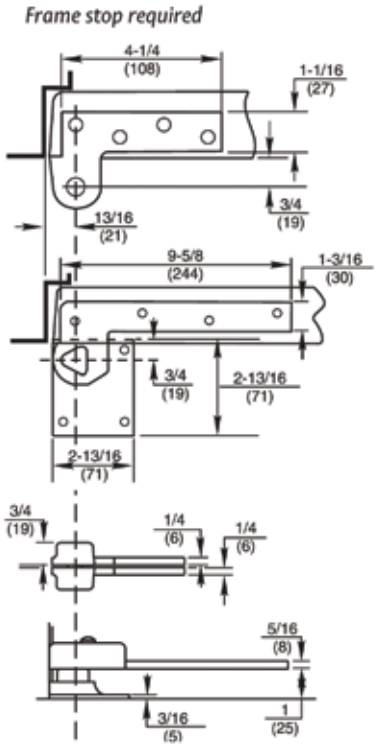

Model 180 - Offset Hung Top Pivots

Application
Full Mortise
Non-handed

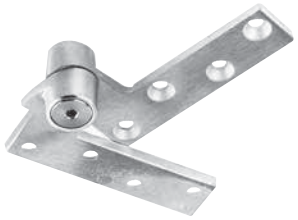

Product Description & Features

- Standard top pivot for most offset pivot sets and floor closers
- Oil-impregnated sintered bronze bushing
- Non-ferrous base material
- For 20-minute label suffix "–20" to the part number
- 3/4" (19mm) offset (measured from centerline of pivot to face of door)
- Furnished with wood and machine screws

Stocked Product

Part #	Finish
180	626

Technical Information

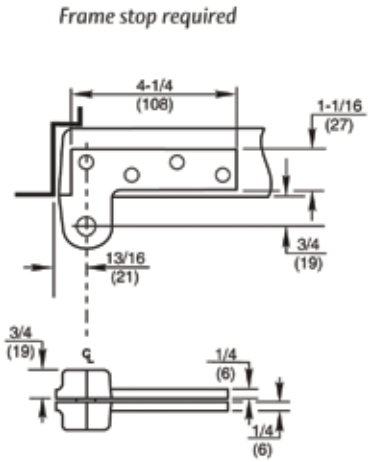

Rixson

Model 340 - Center Hung Top Pivots

Application
Fully Concealed
Non-handed

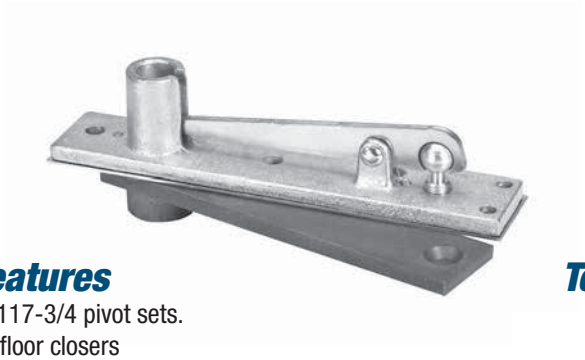

Product Description & Features

- Standard top pivot for Models 370 and 117-3/4 pivot sets. Also used for 28, 30, 40 and 50 Series floor closers
- Walking beam-type pivot – 1/2" (13mm) diameter pivot pin with 3/4" (19mm) engagement
- Oil-impregnated sintered bronze bushing
- Completely concealed when door is closed
- Furnished with wood and machine screws

Stocked Product

Part #	Finish
340	626

Technical Information

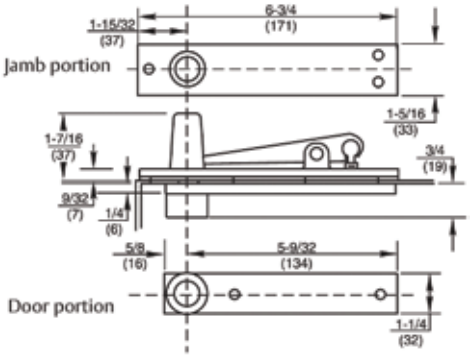

Rixson

Model 996 - Electromagnetic Door Holder

Application
Wall Mount
Adjustable Armature
Concealed Wiring
ANSI/C00011

Product Description & Features

- Total Projection: 3-3/4" (95mm)
- Adjustable armature rotation up and dov back and forth for better alignment.
- Cannot be use with 900 base or spacers.
- Can be used without adjustment piece making it a model 997
- Mounting Requirements:
  2" x 4" x 2-1/2" (51 x 102 x 64mm) outlet box
- Wall must be properly reinforced and outlet box adequately fastened

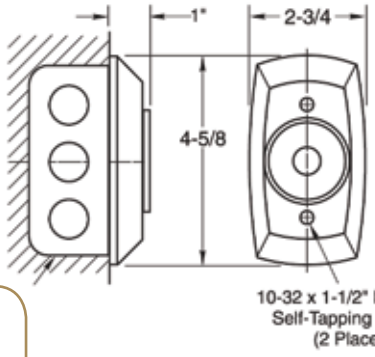

Technical Information

- Voltage and Current:
  120VAC, 60Hz., .020 amp
  24VAC/DC, 60Hz., .020 amp
  12VDC, .040 amp

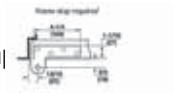

- For 50-55 lbs. of holding force, specify voltage
  120VAC, 60Hz .017 amp
  24VAC, 60Hz .080 amp
  24VDC, .068amp
  12VDC, .180amp
  240VAC, 50/60Hz. .009 amp
- Shipping Weight: 2 lbs. (0.9 kg)

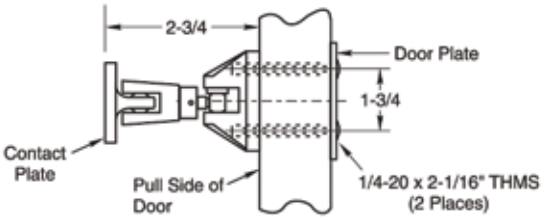

Stocked Product

Part #	Finish
996	689

Model 998 - Electromagnetic Door Holder

Application
Wall Mount
Concealed Wiring
ANSI/C00011

Product Description & Features

- Total Projection: 3-5/8" (92mm)
- Mounting Requirements:
  2" x 4" x 1-3/4" (51 x 102 x 45mm) outlet box
- Wall must be properly reinforced and outlet box adequately fastened

Technical Information

- Voltage and Current:
  120VAC, 60Hz., .020 amp
  24VAC/DC, 60Hz., .020 amp
  12VDC, .040 amp

- For 50-55 lbs. of holding force, specify voltage
  120VAC, 60Hz .017 amp
  24VAC, 60Hz .080 amp
  24VDC, .068amp
  12VDC, .180amp
  240VAC, 50/60Hz. .009 amp
- Shipping Weight: 2-1/2 lbs. (1.1 kg)

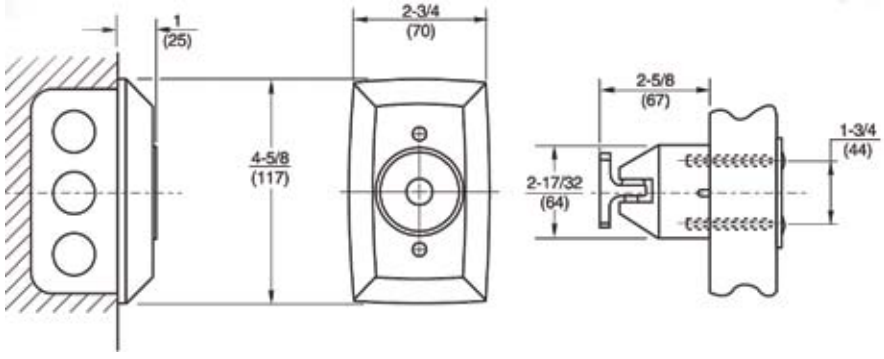

Stocked Product

Part #	Finish
998	689

Rockwood

Push Plates

The push plates are a standard .050" thick. They meet ANSI 156.6 standards. Plates can be mated with most any door pull of your choice.

Stocked Product

No.	Size	Finish
70B	3-1/2" x 15"	605, 613, 630
70C	4" x 16"	605, 613, 630

Pull Plates

These pull plates are .050" thick wrought, stocked in standard architectural finishes,and meet ANSI 156.6 standards.

Stocked Product

No.	Pull CTC	Plate Size	Finish
106x70B	6"	3-1/2" x 15"	605, 613, 630
106x70C	6"	4" x 16"	613, 630
107x70C	8"	4" x 16"	605, 613, 630
132x70C	5-1/2"	4" x 16"	613, 630

Kick Plates

These kick plates are .050" thick and meet ANSI 156.6 standards.

Stocked Product

No.	Plate Size	Finish
K1050	8" x 34"	630
K1050	10" x 34"	630
K1050	12" x 34"	630

Rockwood

Straight Pulls

Stocked Product

No.	Pull CTC	Finish
110	8”	628, 313
111	10”	628, 313
112	12”	628, 313
110 BTB	8”	628, 313
111 BTB	10”	628, 313
112 BTB	12”	628, 313

90° Offset Pulls

Offset pulls come with a 21⁄2”clearance for enhanced ADA compliance.

Stocked Product

No.	Pull CTC	Finish
BF157	10”	628, 313
BF158	12”	628, 313
BF157 BTB	10”	628, 313
BF158 BTB	12”	628, 313

330 - Anti-Vandal Latch Protector

Features:

- Protects cylindrical locks from forced entry and vandalism.
- Fast and simple installation.
- Non-handed.

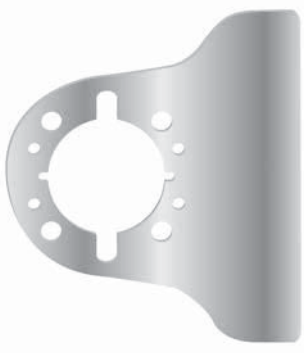

Stocked Product

No.	Size	Finish
330	5-3⁄8” x 6”	630

Rockwood

Push Bars

Stocked Product

Pull No.	Description	Finish
47	Push Bar, 33" CTC	628
SP47	Single Projection Push Bar, 33" CTC	628

Straight Push Pulls

Stocked Product

Pull No.	Pull CTC	Finish
11047	8" x 33" CTC	628

Offset Push Pulls

Stocked Product

Pull No.	Pull CTC	Finish
BF15747	10" x 33"	630
BF15847	12" x 33"	630

Rockwood

406 - Wrought Wall Stops

Wrought brass, bronze, and stainless steel with DuraFlex bumper.

Features:

- Concealed mounting, convex bumper. Back plate prevents damage to wall.
- #8 x 1-1⁄4" TH SMS, plastic toggle fastener
- 3⁄4" Projection

Stocked Product

No.	Size	Finish
406	2-1⁄2" dia.	605, 613, 626

409 - Wrought Wall Stops

Wrought brass, bronze, and stainless steel with DuraFlex bumper.

Features:

- Concealed mounting, concave bumper. Back plate prevents damage to wall.
- #8 x 11⁄4" TH SMS, plastic toggle fastener
- 3⁄4" Projection

Options:

DuraFlex bumper available in standard gray or optional black.

Stocked Product

No.	Size	Finish
409	2-1⁄2" dia.	605, 613, 625, 626, 630

441 - Low Dome Stop

Solid cast brass with DuraFlex bumper.

Features:

- For doors without thresholds (not undercut).
- Fastener: #12 x 1-1⁄4" fh ws, plastic anchor
- No. 441 is packed with both WS and MS fasteners.
  #12 - 24 x 1" FH MS, lead anchor

Options:

Exterior pack screw packs, stainless steel plated to match
— use EXP suffix (440 x EXP) when ordering.

Stocked Product

No.	Base	Height	Finish
441	1⁄4" h x 1-7⁄8" dia.	1-1⁄8"	605, 613, 625, 626

Rockwood

443 - High Dome Stops

Solid cast brass with DuraFlex bumper.

Features:

- For doors with thresholds or undercut doors.
- Fastener: #12 x 1-1⁄2” FH WS, plastic anchor

Options:

Exterior pack screw packs, stainless steel plated to match — use EXP suffix (442 x EXP) when ordering.

Stocked Product

No.	Base	Height	Finish
443	1⁄4” h x 1-7⁄8” dia.	1-1⁄2”	605, 613, 625, 626

449 - Door Stop Riser

Aluminum.
Full size carpet riser provides sturdy base for mounting the No. 440 or No. 442 dome stop.
Specify finish and thickness; 1⁄4”, 3⁄8”, 1⁄2”, 5⁄8”, 3⁄4”, 1”.
Fastener: #12 WS, plastic anchor

Stocked Product

No.	Base	Height	Finish
449	1-7⁄8” dia.	3⁄8”	626

461L - Kick Down Door Stop

Solid cast brass with DuraFlex bumper.

Features:

- DuraFlex bumper provides reliable grip on floor.
- A unique assembly design that conceals the axle in the base.
- For use with doors up to 3” door-to-floor clearance.
- Uses replacement bumper No. 461B.
- Fastener: 4 ea. #8 x 3⁄4” OH SMS

Stocked Product

No.	Base	Projection	Finish
461L	2-1⁄4” x 1-1⁄4”	4-5⁄8”	613, 626

Rockwood

463 - Heavy Duty Door Stop

Flame resistant high impact bumper.
5⁄8" x 2-1⁄2" **Mounting Bolt**

Stocked Product

No.	Size	Finish
463	2" dia. x 1-1⁄2" h.	626

470, 471 - Door Stops

Cast brass with DuraFlex bumper.

Features:

- For doors without thresholds (not undercut).
- Fastener: 470:3 ea. #12 x 1 1⁄4" FH WS; 3 ea. plastic anchors
  471: 1 ea. 5⁄16 - 18 x 1 3⁄4" stud, lead anchor;
  #8 x 3⁄4" OH SMS, plastic anchor

Options:

Exterior pack screw packs, stainless steel plated to match – use EXP suffix (470 x EXP) when ordering.

Stocked Product

No.	Size	Finish
470	2-1⁄2" dia. base, 3" Height	613, 626
471	2-1⁄2" dia. base, 3" Height	613, 626

473 - Door Stop with Keepers

Cast brass with DuraFlex bumper.

Features:

- Fastener: 5⁄16 - 18 x 1 3⁄4" stud, lead anchor;
  #8 x 3⁄4" OH SMS, plastic anchor Keeper:
  2 ea. #12 x 1 1⁄4" FH WS; 2 ea. plastic anchors

• Options:

Exterior pack screw packs, stainless steel plated to match – use EXP suffix (472 x EXP) when ordering.

Stocked Product

No.	Size	Finish
473	2-1⁄2" dia. base, 3-3⁄4" Height	613, 626

Rockwood

481H - Door Stop

Solid cast brass with DuraFlex bumper

Features:

- Heavy duty and ideal for use on heavy doors or in high traffic areas.
- Fastener: 3 ea. #12 - 24 x 1" FH MS, 3 ea. lead anchors
- Uses replacement bumper 461B.

Options:

- DuraFlex bumper available in standard gray or optional black.
- Exterior pack screw packs, stainless steel plated to match

– use EXP suffix (481H x EXP) when ordering.

Stocked Product

No.	Size	Finish
481H	2-1⁄2" x 1-3⁄4" base 2-1⁄4" Height	626

482 - Door Stop

Solid cast brass with DuraFlex bumper

Features:

- Heavy duty and ideal for use on heavy doors or in high traffic areas.
- Fastener: 5⁄16 - 18 x 1-3⁄4" stud, lead anchor; #12 x 1-1⁄4" FH WS, plastic anchor

Options:

- DuraFlex bumper available in standard gray or optional black.
- Exterior pack screw packs, stainless steel plated to match

– use EXP suffix (482 x EXP) when ordering.

Stocked Product

No.	Size	Finish
482	1-1⁄2" x 2-1⁄2" base 2-1⁄8" Height	626

483 - Door Stop

Solid cast brass with DuraFlex bumper

Features:

- Heavy duty and ideal for use on heavy doors or in high traffic areas.
- Fastener: 5⁄16 - 18 x 1-3⁄4" stud, lead anchor; #12 x 1-1⁄4" FH WS, plastic anchor

Options:

- DuraFlex bumper available in standard gray or optional black.
- Exterior pack screw packs, stainless steel plated to match

– use EXP suffix (483 x EXP) when ordering.

Stocked Product

No.	Size	Finish
483	1-5⁄8" x 2-5⁄8" base 2-3⁄4" Height	613, 626

Rockwood

555 - Lever Extension Flush Bolt

Brass.

Features:

- For Fire Rated Hollow Metal Swinging Doors measuring up to 4'w x 10'h rated up to and including 3 Hours.
- Fits ANSI A115 door and frame preparation.
- 3/4" bolt throw, 3/4" rod backset.
- 12" rod length (center of face to bolt end - retracted).
- 11/2" adjustable bolt head.
- Exterior pack screw packs, stainless steel plated to match – use EXP suffix (481H x EXP) when ordering.

Stocked Product

No.	Size	Finish
555	Face plate: 1" x 6-3/4" Strike: 15/16" x 2-1/4" Guide: 1" x 2"	605, 613, 625, 626

557 - Lever Extension Flush Bolt

Cast brass.

Features:

- For Fire Rated Plastic & Wood Covered Doors measuring up to 4'w x 10'h rated up to and including 1-1/2 Hours.
- 3/4" bolt throw, 3/4" backset; door strength maintained by corner reinforcing plate.

Options:

Use No. 570 Dust Proof Strike to prevent dirt blocking bottom strike.

Stocked Product

No.	Size	Finish
557	Face plate: 1" x 6-3/4" Strike: 15/16" x 2-1/4"	605, 613, 625, 626

Rockwood

570 - Dust Proof Strike

Brass.

Features:

- Works with all Rockwood manual and automatic flush bolts.
- Removable face plate for use with thresholds.
- Adjustable height for carpeted areas.
- Fastener: Adjustment nut. Spanner wrench.
  2 ea. #8 x 1 OH SMS, 2 ea. plastic anchors.
  2 ea. #8 - 32 x 3⁄4" OH MS, 2 ea. lead anchors.

Stocked Product

No.	Size	Finish
570	Face plate: 13⁄8" x 27⁄8" Barrel: 7⁄8" dia. x 2" depth	613, 625, 626

576 - Gravity Door Coordinator

Cast brass.

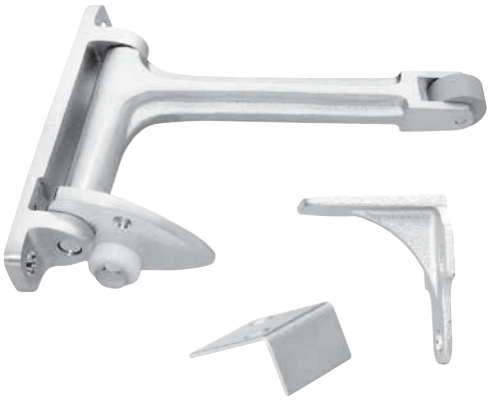

Features:

- Non-handed reversible. Prevents the active door from closing until the inactive door is closed.
- Fastener: Body: 2 ea. #10 x 1" FH SMS, 2 ea. #10 - 24 x 1" FH MS.
  Strike: 5 ea. #8 x 1" FH SMS.

Stocked Product

No.	Size	Projection	Finish
576	1" x 5-7⁄16"	7"	613, 626

580 - Surface Bolt

Steel, stainless steel.

Features:

- UL listed for use on inactive leaf of a pair of 3-hour labeled fire doors.
- Includes a universal top strike and a mortise bottom strike.
- Fastener: 8 ea. #10 x 11⁄4" FH SMS, 8 ea. #10 - 24 x 1" FH MS.

Stocked Product

No.	Bolt Length	Finish
580-8	8"	626

Rockwood

594 - Roller Latch with No. 161 Strike

Cast brass.

Features:

- Solid nylon roller for durable silent operation.
- Simple adjustment for roller projection.
- Fastener: Body: 2 ea. #8 x 3/4" FH combo screws.
  Strike: 2 ea. #8 x 3/4" FH combo screws.

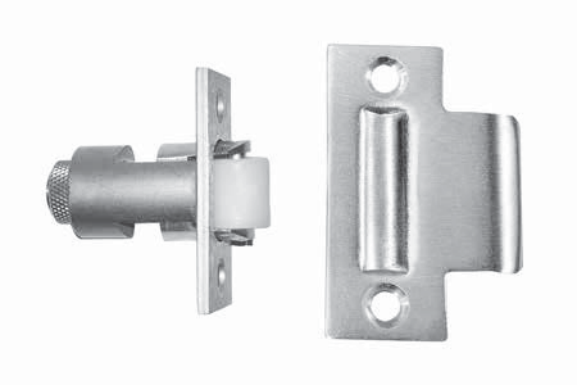

Stocked Product

No.	Latch Face	Strike	Finish
594	1-1/8" x 2-/4"	1-1/8" x 2-3/4"	613, 626

608, 609 - Door Silencers

DuraFlex gray rubber.

608

609

Stocked Product

No.	Size	Frame type
608	1/2" dia. x 5/8"	Metal
609	3/8" x 3/4"	Wood

622 - 190° Door Viewer

Brass.
For 1-3/8" to 2-1/8" Doors

Stocked Product

No.	Finish
622	605, 626

Rockwood

2601AB, 2601C - Mounting Brackets (for Soffit Applied Hardware)

Aluminum.

Features:

- Used for stop applied hardware. Prevents the inaverdent disabling of the coordinator by fasteners passing through the housing.
- Fastener: 4 ea. 1⁄4 - 20 x 1⁄2" FH MS, 4 ea. #12 - 24 x 2" FH MS.

Stocked Product

No.	Soffit Size	Length	Finish
2601AB	7⁄8" - 2-1⁄4"	5"	Black prime coat
2601C	Over 21⁄4"	5"	Black prime coat

2601AB

2601C

2672, 2696 - Door Coordinators

Steel.

Features:

- Non-handed. Override protection to prevent damage in case of abnormal force on door. Mechanism and filler bar completely fill width of opening and when painted to match frame it becomes virtually invisible
- Fastener: 7 ea. #12 - 24 x 11⁄4 TH type C tapping screws.

Stocked Product

No.	Opening	Finish
2672	72"	Black prime coat
2696	96"	Black prime coat

1700- Universal Door Coordinator

Steel, aluminum.

Features:

- Fastener: 6 ea. #10 x 13⁄4" TH SMS, 6 ea. #10 - 32 x 11⁄2" TH MS.

Stocked Product

No.	Size	Finish
1700	1-1⁄2" x 20-1⁄8" x 5⁄8"5"	Black prime coat

Rockwood

2842 - Automatic Flush Bolt

Brass, stainless steel.

Features:

- For Fire Rated Metal Doors labeled A, B, C, D & E up to 4'w x 8'h.
- Non-handed.
- Fully automatic– opening active door retracts top and bottom bolts.
- Override feature prevents damage to doors or bolts if bolt heads are blocked from entering strikes.
- Bolt head rods are adjustable up to 1-1⁄2".
- Thermal lock automatically locks the inactive door under high heat conditions due to fire.

Stocked Product

No.	Size	Finish
2842	1" x 6-3⁄4"	613, 625, 630
ANSI A156.3: Type 25		

2942 - Automatic Flush Bolt

Brass, stainless steel.

Features:

- For Wood Doors labeled B, C, D & E up to 4'w x 9'h.
- Non-handed.
- Fully automatic—opening active door retracts top and bottom bolts.
- Override feature prevents damage to doors or bolts if bolt heads are blocked from entering strikes.
- Bolt head rods are adjustable up to 1⁄2".
- Thermal lock automatically locks the inactive door under high heat conditions due to fire.

Stocked Product

No.	Size	Finish
2942	1" x 8-1⁄2"	613, 625, 630
ANSI A156.3: Type 25		

Rockwood

911 - Adjustable Ball Catch - Square Corners

Features:

MATERIAL: BRASS
FASTENER: 4EA #6 x 3/4 FH SMS

OTHER: wide strike for mounting on jamb, catch in door.
Dual adjustment for door clearance and holding strength.

BODY SIZE: 1" X 2-1/8"
STRIKE SIZE: 1-3/8"W X 2-1/8"

Stocked Product

No.	Body Size	Strike Size	Finish
911	1" x 2-1⁄8"	1-3⁄8" x 2-1⁄8"	605, 626

Schlage - *Dexter Residential*

Deadbolt Locks - *ANSI A156.5, 1992 Grade 3*

- C keyway 5 pin, 1-3/8" - 1-3/4" thick door
- Provided double option: square corner, or 1/4" radius
  Adjustable 2-3/8" - 2-3/4" backset
- 2-1/8" bore size

JD60 ANSI E2153
Single Cylinder Deadbolt
Deadbolt thrown or retracted by key from outside or by inside turn unit. Bolt automatically deadlocks when fully thrown.

JD60
Single Cylinder Deadbolt

Stocked Product
Finishes: 605,609,619,620,625,630,716

Locks Handlesets - *ANSI A156.2, 1969, Series 4000, Grade 3*

- C keyway 5 pin, 1-3/8" - 1-3/4" thick door
- Provided double option: square corner, or 1/4" radius
  Adjustable 2-3/8" - 2-3/4" backset

JH60 - Entrance Lock
Deadbolt thrown or retracted by key from outside or by inside turn unit. Latch retracted by thumbpiece from outside or by inside knob/lever.

Consist of:
JH58 - outside trim
JH59 - inside trim

Schlage - *Dexter Residential*

J10 ANSI F75

Passage Latch
Both knobs/levers always unlocked.

J18/19

Pasage Lock with Keyed Deadbolt
Deadbolt operated by key from outside or by turn unit from inside. Bolt automatically deadlocks when fully thrown. Latch retracted by lever from either side. Turning inside lever retracts deadbolt and latch simultaneously for immediate exit

J54 ANSI F81

Entrance Lock
Unlocked by key from outside when outer knob is locked by turn-button in inside knob. Inside knob/lever is locked and unlocked by turn button.

J40 ANSI F76

Bath/Bedroom Privacy Lock
Turn-button locking. Can be opened from outside by turning outside turn mechanism. Turning inside turn button releases inside knob/lever.

J40P ANSI F76

Bath/Bedroom Privacy Lock
Push-button locking. Can be opened from outside with small circular tool. Turning inside knob/lever releases button.

JI58/59

Keyed Entrance lock
Deadbolt operated by key from outside or by turn unit from inside. Bolt automatically deadlocks when fully thrown. Outside lever unlocked by key from outside when locked by turn button in inside lever.Turning inside lever retracts deadbolt and latch simultaneously for immediate exit.Latch automatically deadlocks when door is closed.

J170

Single Dummy Trim
Dummy trim for one side of door. Used for door pull or as matching inactive trim.

Outside Trim Handlesets Active - *JH58 outside trim only*

BARCELONA
Symbol **BAR**

PARIS
Symbol **PAR**

Stocked Product

Barcelona JH58	605,609,619,620,625,630,716
Paris JH58	605,619,625,630,716

Schlage - *Dexter Residential*

Handleset Inside Trim - *JH59 Active only*

CORONA
Symbol **CNA**

DOVER
Symbol **DOV**

LASALLE
Symbol **LAS** (Handed)

MARIN
Symbol **MAR**

SEVILLE
Symbol **SEV** (Handed)

SOLSTICE
Symbol **SOL**

TORINO
Symbol **TOR**

STRATUS
Symbol **STR**

605, 609- While Supplies Last

625- While Supplies Last

Stocked Products

Corona	**JH59**	605,609,619,620,625,630,716
Dover	**JH59**	630
La Salle	**JH59**	605,609,619,620,625,716
Marin	**JH59**	619
Seville	**JH59**	619,716
Solstice	**JH59**	619,625
Stratus	**JH59**	619,716
Torino	**JH59**	619,620,625,630,716

Interconnected Lock - *JI Series*

Applications:

Single and multi-family residential, office, hotel/ motel, and light commercial applications.

Specifications:

- Interconnected latchbolt and deadbolt chassis
- Ideal for new construction
- 5 1/2" center to center cross-bore diameter
- Both latch and deadbolt are retracted simultaneously, allowing for emergency egress
- Product exceeds all ANSI Al 56.12 Grade 3 requirements
- UL Listed for all functions
- Non-handed Levers
- Adjustable latch for 2 3/8" or 2 3/4" backset
- Dexter offers a lifetime mechanical warranty

DOOR RANGE: 1 3/8" to 1 3/4" (35 mm-51 mm).

Stocked Products

JI18	**Marin**	630
JI19	**Marin**	630
JI58	**Torino**	630
JI59	**Torino**	630

Schlage - *Dexter Residential*

BYRON
Symbol **BYR**

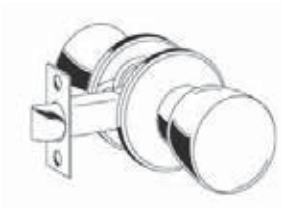

CORONA
Symbol **CNA**

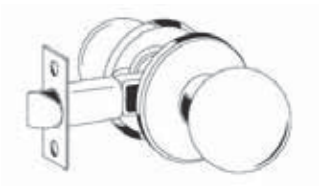

DOVER
Symbol **DOV**

LASALLE
Symbol **LAS** (Handed)

620 , 625 - While Supplies Last

MARIN
Symbol **MAR**

605- While Supplies Last

SEVILLE
Symbol **SEV** (Handed)

SOLSTICE
Symbol **SOL**

STRATUS
Symbol **STR**

TORINO
Symbol **TOR**

605 - While Supplies Last

Stocked Product

DESIGNS	FUNCTIONS	FINISHES
Byron	J170, J10, J40, J54	605,630
Corona	J170, J10, J40, J54	605,609,619,620,625,630,716
Dover	J170, J10, J40, J54	630
La Salle	J170, J10, J40, J54	605,609,619,620,625,716
Marin	J170, J10, J40, J54	605,619,630
Seville	J170, J10, J40, J54	605,619,625,716
Seville	J40P	619,716
Solstice	J170, J10, J40, J54	619,625
Solstice	J40P	619,716
Stratus	J170, J10, J40, J54	619, 716
Torino	J170, J10, J40, J54	605,619,620,625,630,716
Torino	J40P	619,716

Schlage - *Dexter Residential*

Strikes & Parts

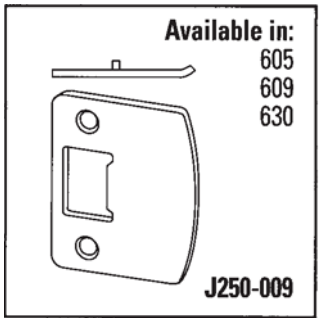

Radius corner full lip

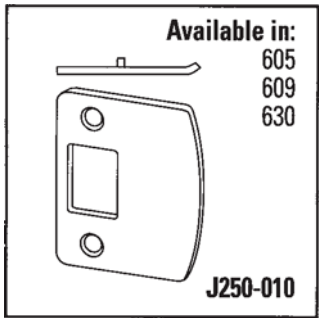

Radius full lip for JD60

J750-000
5 pin key blank
Schlage C Keyway

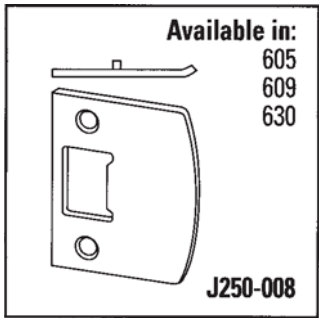

Square corner full lip

Square strike plate and frame reinforcer with 3" screws

Radius Corner Deadbolt Strikes

Stocked Products
J250-026: 605,609,630, 716
J250-027: 605,609,620,630

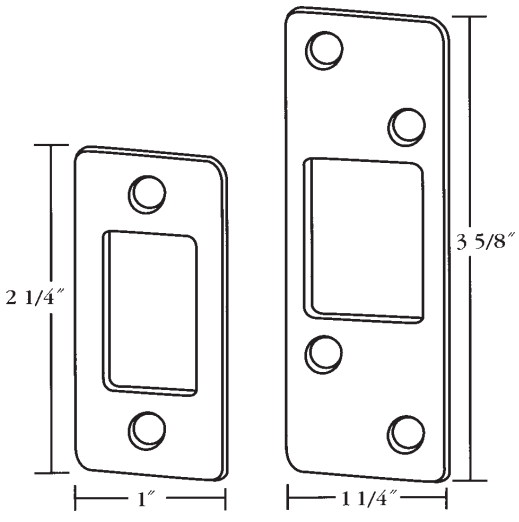

J250-026 **J250-027**

Schlage - *A Series*

Light Commercial A Functions
ANSI A156.2, Series 4000, Grade 2

- 6 pin cylinder, keyed 5 pin C keyway
- 2-3/8" backset with 10-001 T-strike
- Optional strikes & backsets available
- 1-3/8" - 1-7/8" thick door

Stocked Product

Levon	A10S Passage	613, 626
	A40S Privacy	613, 626
Orbit and Plymouth	A10S Passage	605,613,626,(625-Orbit only)
	A170 Dummy	605,613, 626,(625-Orbit only)
	A40S Privacy	605,613,626,(625-Orbit only)
	A40S Privacy X 625	605, 613
	A53P Entry	605,613,626,(625-Orbit only)
	A70P Classroom	605,613,(625-Orbit only)
	A80P Storeroom	605,613,626

A10S ANSI F75
Passage Latch
Both knobs always unlocked.

A40S ANSI F76
Bath/Bedroom Privacy Lock
Push-button locking. Can be opened from outside with small screwdriver. Turning inside knob or closing door releases button.

A53PD ANSI F109
Entrance Lock
Turn/push-button locking; pushing and turning button locks outside knob, requiring use of key until button is manually unlocked. Push-button locking; pushing button locks outside knob until unlocked by key or by turning inside knob.

A70PD ANSI F109
Classroom Lock
Outside knob locked and unlocked by key. Inside knob always unlocked.

A80PD ANSI F86
Storeroom Lock
Outside knob fixed. Entrance by key only. Inside knob always unlocked.

A170
Single Dummy Trim
Dummy trim for one side of door. Used for door pull or as matching inactive trim.

Standard 2-3/8" BS, T strike with classic "C" keyway. Optional latches and strikes available

LEVON
Symbol **LEV**

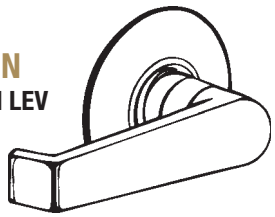

ORBIT
Symbol **ORB**

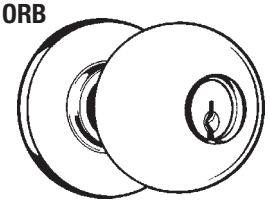

PLYMOUTH
Symbol **PLY**

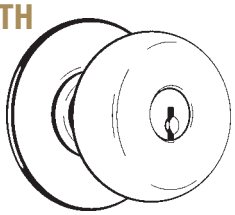

Schlage - *AL Series*

AL10S ANSI F75
Passage Latch
Both levers always unlocked.

AL25D
Exit Lock
Blank plate outside. Inside lever always unlocked.

AL40S ANSI F76
Bath/Bedroom Privacy Lock
Push-button locking. Can be unlocked from outside with small screwdriver. Turning inside lever or closing door released button.

AL170
Simple Dummy Trim
Dummy trim for one side of door. Used for door pull or as matching inactive trim.

AL50PD ANSI F82
Entrance/Office Lock
Push-button locking. Push-button locks outside lever until unlocked with key or by rotating inside lever.

AL53PD ANSI F109
Entrance Lock
Turn/push-button locking; pushing and turning button locks outside lever requiring use of key until button is manually unlocked. Push-button locking; pushing button locks outside lever until unlocked by key or by turning inside lever.

AL70PD ANSI F84
Classroom Lock
Outside lever locked and unlocked by key. Inside lever always unlocked.

AL80PD ANSI F86
Storeroom Lock
Outside lever fixed. Entrance by key only. Inside lever always unlocked.

Standard Features:

Certification	ANSI A156.2, 1996, Series 4000, Grade 2, UL Listed for 3 hour fire door
Latch	1-1/8" x 2-1/4", Square corner faceplate, 1" housing diameter, 1/2" throw
Strike	1-1/4" x 4-7/8" ANSI, Square corner, no box
Backset	Standard 2-3/4", optional 2-3/8" BS available
Door Range	1-3/8" - 1-7/8"
Keyed locks	Classic C keyway, KD - also available Everest C123

Stocked Product

Stocked Functions: AL10S, AL170,AL40S, AL50P,AL53P, AL70P,AL80P
Stocked Finishes: 605,613,625,626
Stocked Designs: Saturn and Neptune

Stocked Functions: AL25D,
Stocked Finishes: 626
Stocked Designs Saturn, Neptune

Stocked Function: AL53J,for large format Recore, Less Core
Stocked Finishes: 626
Stocked Designs: Saturn

Stocked Function: AL53BSAT, Small format interchangeable Core, Less Core
Stocked Finishes: 626
Stocked Designs: Saturn

Stocked Function: AL80BSAT, Small format interchangeable Core, Less Core
Stocked Finishes: 626
Stocked Designs: Saturn

SATURN

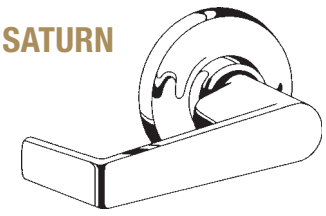

NEPTUNE

SATURN

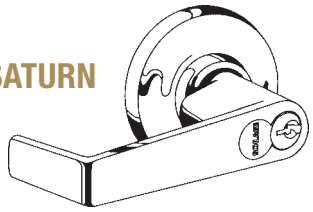

Schlage - *A & AL Parts*

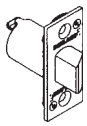

11-068
2-3/8”SL

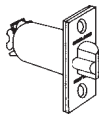

11-085
2-3/8”DL

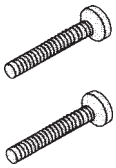

A Series
Screws
A501-161

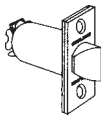

11-116
2-3/4”SL

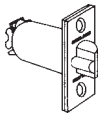

11-096
2-3/4”DL

11-104
2-3/8”
CIRCULAR
DRIVE-IN DL

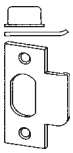

10-001
T - STRIKE

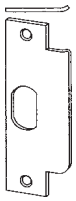

10-025
ASA **STRIKE**

10-026
SQUARE CORNER
FULL LIP STRIKE

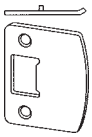

10-027
RADIUS CORNER
FULL LIP STRIKE

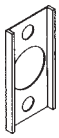

A501-878
FACEPLATE
ADAPTER

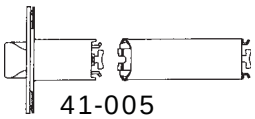

41-005
5" BACKSET LINK

Stocked Product

11-068	Spring Latch 2-3/8” BS, 1” X 2-1/4” Face, 7/8” hsg	605,613,626
11-116	Spring Latch 2-3/4”BS, 1-1/8” X 2-1/4” Face 1” hsg	605,613,626
11-085	Dead Latch 2-3/8” BS, 1”X 2-1/4” Face7/8” hsg	605,613,626
11-096	Dead Latch 2-3/4” BS, 1-1/8” X 2-1/4” Face 1”hsg	605,613,626
11-091	Dead Latch 2-3/4” BS, 1” X 2-1/4” Face 7/8” hsg	605,613,626
11-103	Dead Latch 3-3/4” BS, 1-1/8” X2-1/4: Face 1”hsg	626
11-104	Dead Latch, Circular, 2-3/8” BS. 1” hsg	626
11-105	Dead Latch, Circular, 2-3/4” BS. 1”hsg	626
10-001	T Strike, 1-1/8” X 2-3/4” Square Corner	605,613,619,626
10-025	ANSI no box,1-1/4” X 4-7/8” Square Corner	605,613,626,619,625
10-025	ANSI no box,1-1/2” X 4-7/8” Square Corner	613,625,626
10-026	SQ Strike, Full Lip 1-5/8” X 2-1/4”	605,613,626,619,620,609
10-027	Radius Strike, Full Lip 1-5/8” X 2-1/4”	605,613,626,619,620,609
41-005	5” Backset Link	-

Schlage - *B250 Deadlatch Locks*

B250 Series

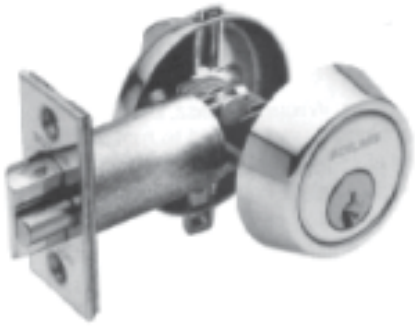

B250PD

Single Cylinder Night Latch

Deadlocking latchbolt retracted by key from outside or by inside turn unit. Rotating turn unit and activating holdback feature keeps latch retracted.

B252PD

Double Cylinder Deadlatch

Deadlocking latchbolt retracted by key from either side. No hold-back feature.

- C keyway
- 2-3/8" backset standard, optional 2-3/4" backset available
- square corner T strike 10-001 Standard

Stocked Product

B250P	605,613,626	
B252P	605,613,626	
B520-086	Mounting Screw 2-1/4"	605
B520-087	Mounting Screw 2-3/8"	605
B520-267	Mounting Screw F/B	
B520-271	Drive Pin only	626

Stocked Product

12-100	605,613,626
12-103	605,613,626

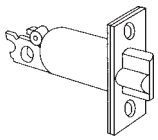

12-100

2-3/8" BS square corner 1-1/8" x 2-1/4"

12-103

2-3/4" BS square corner 1-1/8" x 2-1/4"

Schlage - *B60 Deadbolts*

B60 Series - Deadbolt

Three-piece design Ready to go out of the box for quick installation.

Sleek Low profile face is almost impossible to grab with a wrench and cannot be unscrewed.

Versatile Shield is easily removed to fit 1 1/2" cross-bore prep.

Stronger 1/2" of bolt left in housing when bolt is thrown for added kick-in resistance.

Tougher Thicker metal strike reinforcer has 3" screws for greater strength in the jamb.

Secure Integrated anti-pick shield with SNAP & STAY™ self-adjusting tension provides added security and simplifies installation.

Required 1" door prep required for larger bolt housing.

Solid Zinc bolt has hardened steel pin inside that spins in response to sawing attack and can't be cut through.

Bigger Bolt diameter is 10% larger than typical bolts for maximum kick-in resistance.

Rounded Radius corners on strike plate for more attractive installation. 1 1/8" x 2 3/4" round corner strikes come standard.

UL Listed Optional 3-hour UL Listed fire cup/latch available.

Streamlined Deep drawn housing delivers a seamless piece of steel from beginning of helix to back of bolt for maximum latch/bolt reliability. Fits both 2 3/8" and 2 3/4" backsets.

Unprecedented Adjustable backset has the industry's only helical design that locks into place with no adjusting during installation. Fits both 2 3/8" and 2 3/4" backsets.

Code Compliant ADA compliant thumbturn.

Available Functions:

B60 - Single cylinder dead bolt lock
B62 - Double cylinder dead bolt lock
B80 - Door bolt
B81 - Door bolt with trim (Special Order)

Designed to fit virtually any door.

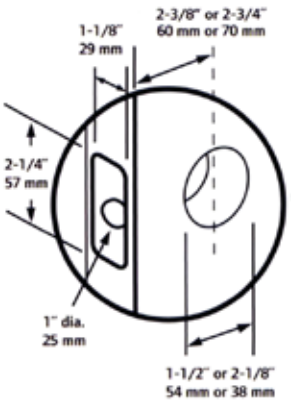

Standard door prep for B-Series installation.

Standard Strike

10-116*
1 1/8" x 2 3/4"

Schlage - *B*

B Series - Deadbolt Locks - *ANSI A156.5, 1992, Grade 2*

B60 ANSI E2152
Single Cylinder Deadbolt Lock
Deadbolt thrown or retracted by key from outside or by inside turn unit. Bolt automatically deadlocks when fully thrown.

B62N ANSI E2142
DoubleCylinder Deadbolt Lock
Deadbolt thrown or retracted by key from either side. Bolt automatically deadlocks when fully thrown.

B80 ANSI E2192
Door Bolt
Deadbolt thrown or retracted by turn unit only. No outside trim. Bolt automatically deadlocks when fully thrown.

B60 - Deadbolts Series

- C keyway 5 Pin
- Triple option face plates, square corner, round corner and circular
- Adjustable 2-3/8" or 2-3/4" BS
- Standard square corner 10-094 strike
- Door preparation 1-1/2" or 2-1/8"
- Door preparation 2-1/8" bore
- B80 - 1 1/2" Bore only

Stocked Product:

ITEM	DESCRIPTION	FINISH
B60	Single Cylinder	505, 605, 609, 613, 619, 620, 621, 622, 625, 626, 716
B62	Double Cylinder	505, 605, 609, 613, 619, 620, 622, 625, 626, 716
B80	Door Bolt	605, 609, 613, 619, 620, 622, 626, 716

Schlage - *Strikes and Parts*

B60 – Strikes

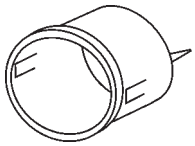

10-064
Thimble strike
circular drive-in

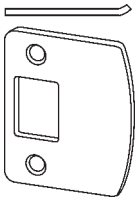

10-092
1/4" Radius
round corner
Full lip, no box
1-5/8" x 2-1/4"

10-094 Standard
Square corner
1-1/8" x 2-3/4" Standard

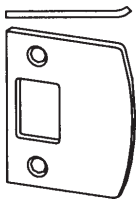

10-095
Square Corner Box
Full lip, no box
1-5/8" x 2-1/4"

Stocked Product

10-064	Thimble Strike 1-3/16" Diameter	626
10-092	Round Corner Full Lip Strike 1-5/8" X 2-1/4"	605, 609, 613, 619, 620, 625, 626
10-094	Square Corner Strike, 1-1/8" X 2-3/4"	605, 609, 613, 619, 620, 625, 626
10-095	Square Corner Full Lip Strike,1-5/8" X 2-1/4"	605, 613, 619, 620, 626

B60 Parts

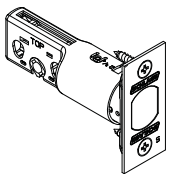

12-288 Square Corner
Adjustable Backset

12-288 Square Corner Bolt, 2-3/8"-2-3/4" BS,
1" X 2-1/4" Face Plate

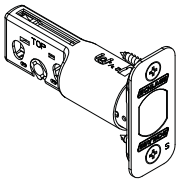

12-289 ¼" Round Corner
Adjustable Backset

12-289 ¼" Round Corner Bolt, 2-3/8"-2-3/4" BS,
1' X 2-1/4" Face Plate
12-633 Square Corner Bolt, 5" BS,
1" X 2-1/4" Face Plate

Stocked Product

12-288	605, 626, 613, 619
12-289	605, 626, 613, 619
12-633	613, 626

Schlage - *BE/FE*

BE/FE Series - Keypad Locks

BE365 PLY

BE365 CAM

FE595-PLY-x-FLA

FE285 PLY-x-FLA

Security and Quality:

- Grade 2 ANSI/BHMA ce rtified
- Patented commercial grade clutching motor drive ; tested to one million cycles
- Vandal resistant clutching lever and knob design ; free spinning deadbolt turn
- Code control; 6-digit programming code required to add and delete user codes
- Warning code sounds after four incorrect codes entered; keypad disabled for 30 seconds
- Mechanical key override; paten t pending

Convenience:

- Convenient keyless access; no keys to hide , lose or forget
- Pre-set with random 6-digit programming code and two random 4-digit user codes
- 19 user code capacity ; 10,000 user code combinations
- Easily programmed right at the keypad; no need to remove inside escutcheon
- Blue LEDs illuminate the keypad on demand
- Reversible levers for left- or right -handed doors
- Emergency exit feature; allows for panic-free exit on and FE595
- Locks can be re-keyed to match existing locks
- 9-volt alkaline battery included

Stocked Product

BE365	Camelot	505,613,619,716
BE365	Plymouth	505,613,619,626,716
FE285	Camelot/Accent	505,619,716
FE285	Plymouth/Flair	505,613,619,716
FE595	Camelot/Accent	613,619,716
FE595	Plymouth/Flair	613,619,716

BE365

Keypad Deadbolt

Deadbolt thrown from outside by keyway turn after pressing Schlage button or by inside thumbturn.

Deadbolt retracted from outside by entering valid user code then rotating keyway turn or by inside thumbturn.

Key can be used to unlock as backup

FE285

Lower Half - Front Entry Set

Combine with BE365 Keypad Deadbolt for Front Entry Set.

FE595

Keypad Entry with Flex-Lock

Flex Locking, switch between unlocked or automatic re-locking.
Unlocked by valid user code from outside.

Inside lever always unlocked

Key can be used to unlock as back-up

Schlage - *FE Electric Lock Set*

BE369 / FE599 Series - Keypad Locks

Enhanced Security Featuring Wireless Encryption
- Anti-pick shield helps to prevent tampering
- Patented latch bolt design provides maximum kick-in resistance
- SSL 128-bit encryption
- Similar security used in online banking

Innovative Technology
- Uses Z-Wave Technology
- Automatic battery level notification
- Non-wearing Keypad, lighted for night time use

Easy Installation with Guaranteed Fit
- Replace your existing lock with a screwdriver in less than 30 minutes
- Fits all standard door preparations
- Reversible lever adapts to both right- and left-hand doors

Stocked Product

FE599	Lever by Lever	505,619
BE369	Camelot Deadbolt	505,619,716

Schlage - *BE Touchscreen Deadbolt*

BE 468NX & BE 469NX Series - Touchscreen Deadbolt

Schlage connected locks use Z-Wave®, a wireless technology that makes your house smarter, safer, and far more convenient. When these locks are paired with a compatible Z-Wave® home automation system, homeowners can remotely control, manage, and monitor access to their home.

BE468NX Features:
- GRADE 2 Higher Residential Security Rating
- Durable resistive touchscreen ensures wear pattern remains undetectable.
- Slim exterior prevents interference with storm doors or other door preps.

BE469NX Features:
- ANSI A156.36-2010 Grade 1 BE469NX - Touchscreen Deadbolt with Alarm
- Autothrow deadbolt is activated from outside by pressing the Schlage button
- Deadbolt automatically retracted from outside by entering valid user code
- Key can be used to unlock as backup
- Built-in Alarm Technology alerts home owners to potential security threats

Camelot Century

Stocked Product

BE468NX	Camelot	619
BE469NX	Camelot	619,716
BE469NX	Century	619,625,716

Schlage - *B500 Deadbolts*

B500 Series - Deadbolt

Certifications: ANSI A156.5, 2001, Grade 2. Available UL Listed for three-hour fire door.

Door range: 1-3/8" to 1-3/4" thick (35 mm to 44 mm) standard. Available for over 1-3/4" to 2-1/4" and over 2-1/4' to 4" assembled to order. **Special Order.**

Backset: 2-3/8" (60 mm) or 2-3/4" (70 mm) adjustable backset standard.

Deadbolts: 1" x 2-1/4" (25 mm x 57 mm) square corner.

Strikes: Square corner 1-1/8" x 2-3/4" (29 mm x 70 mm) strike, no lip, furnished with metal dust box standard.

Adapter Rings: Trim ring with anti-pry shield standard, 2-1/2" (63 mm) outer diameter. Removable to fit 1-1/2" crossbore door preps.

Functions:

ANSI A156.5, 2001, Grade 2

Bored Deadbolt Locks

SCHLAGE	ANSI
B560P	**E2152**

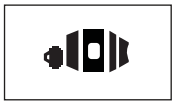

Single Cylinder Deadbolt Lock
Deadbolt thrown or retracted by key from outside or by inside turn unit. Bolt automatically deadlocks when fully thrown.

B562P **E2142**

Double Cylinder Deadbolt Lock*
Deadbolt thrown or retracted by key from either side. Bolt automatically deadlocks when fully thrown.

B580 **E2192**

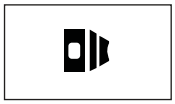

Door Bolt
Deadbolt thrown or retracted by turn unit only. No outside trim. Bolt automatically deadlocks when fully thrown.

B571

Door Occupancy Indicator
Deadbolt thrown or retracted by inside turn unit. Occupancy indicator on outside (reads either in use or vacant. Requires 1-1/2" cross bore prep. Not UL rated.

Specifications:

Door Preparation

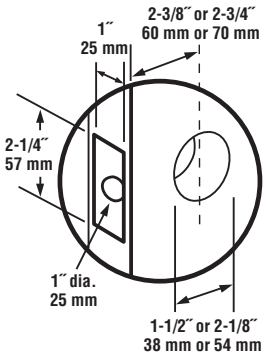

Stocked Product

B560P	605, 609, 613, 619, 625, 626
B562P	605, 609, 613, 625, 626
B571	613, 626
B580	605, 609, 613, 625, 626

B 500 Series - Strikes, Bolts and Accessories

Stocked Product

10-064	Thimble Strike	626
10-094	Square Corner Strike 1-1/8" X 2-3/4"	605,609,613, 619,620,625,626
38-031	G00F Ring, 2-1/2" Diameter for 2-1/8" Door prep	605,609,613,625,626
A501-565	Reinforcer for 1-3/8" Thick Metal Doors	no finish

10-064

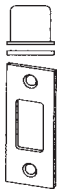

10-094
STANDARD

38-031
GOOF RING

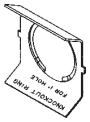

A501-566
A501-565

Schlage - *B600 Deadbolts*

B600 Series - Deadbolt

Feature:

Certification	ANSI A156.5 Grade 1, UL Listed for 3 hour door
Deadbolt	1-1/8" x 2-1/4" square corner faceplate, 1" housing 1" throw
Backset	Standard 2-3/4", also available 2-3/8"
Cylinder	Standard classic "C" also available C123 Everest

Options:

- Available prepped for Removable Core (RC) less core; specify "J"
- Available prepped F/ Best IC Core (Small Format) less core specify "B"

For Everest keyway specify suffix EV after part number i.e. 9SCHB660P605EV
Door preparation 1-1/2" or 2-1/8" bore size

Stocked Product:

B660P	605,613,625,626
B660B	626
B660J	613,626
B661P	626
B662P	605,613,626
B662J	626
B663P	626
B663J	613,626
B664P	626

B660P ANSI E2151

Single Cylinder Deadbolt Lock

Deadbolt thrown or retracted by key from outside or by inside turn unit. Bolt automatically deadlocks when fully thrown.

B661P ANSI E2161

One-way Deadbolt Lock

Deadbolt thrown or retracted by key only. Blank plate inside. Bolt automatically deadlocks when fully thrown.

B662P ANSI E2141

Double Cylinder Deadbolt Lock

Deadbolt thrown or retracted by key from either side. Bolt automatically deadlocks when fully thrown.

B663P ANSI E2111

Classroom Deadbolt Lock

Deadbolt thrown or retracted by key outside. Inside turn unit will retract bolt only. Bolt automatically deadlocks when fully thrown.

B664P ANSI E2101

Cylinder Lock

Deadbolt thrown or retracted by key from one side. No inside trim. Bolt automatically deadlocks when fully thrown.

B660 Parts

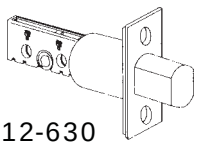

12-630

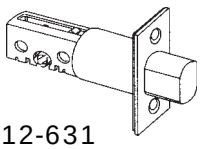

12-631

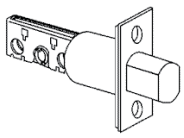

12-632

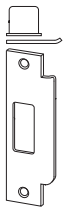

10-087

10-055

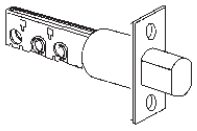

12-633

Stocked Product:

10-055	Square Corner Strike, 1-1/8" X 2-3/4" FP	605,613,626
10-087	ANSI Strike With 1-3/16" Lip	605,613,619, 620,625,626
12-630	Bolt, 2-3/8" BS, 1-1/8" X 2-1/4" Face Plate	605,613,626
12-631	Bolt, 2-3/4" BS, 1-1/8" X 2-1/4" Face Plate	605,613,626
12-632	Bolt, 3-3/4" BS, 1-1/8" X 2-1/4" Face Plate	626
12-633	Bolt, 5" BS, 1-1/8" X 2-1/4" Face Plate	613,626

Schlage - *ND Locks*

ND Series - Levers

Standard Features:

Certification	Exceeds ANSI A156.2, Series 4000, Grade 1, UL Listed for 3 hour fire door. Meets A117.I
Feature	Tested to exceed three million cycles
Latch	1-1/8" x 2-1/4", Square corner faceplate, 1" housing diameter, 1/2" throw
Strike	1-1/4" x 4-7/8", ANSI, Square corner, no box
Backset	2-3/4" standard, other backsets available
Cylinder	Classic C keyway, also available C123 Everest Keyway
Door Range	1-5/8" - 2-1/8"

Options:

- Available prepped for Removable Core (RC) less core; specify "J"
- Available prepped F/ Best IC Core (Small Format) less core specify "B"

RHODES

SPARTA

OMEGA

ND10S ANSI F75
Passage Latch
Both levers always unlocked. Inside lever is always free for immediate egress.

ND170
Single Dummy Trim
Dummy trim for one side of door. Used for door pull or as matching inactive trim.

ND25
Exit Lock
Blank plate outside, Inside lever always unlocked. Inside lever is always free for immediate egress.

ND40S ANSI F76
Bath/Bedroom Privacy Lock
Push-button locking. Can be opened from outside with small screwdriver. Turning inside lever or closing door releases button. Inside lever is always free for immediate egress.

ND50PD ANSI F82
Entrance/Office Lock
Push-button locking. Push-button locks outside lever until unlocked with key or by turning inside lever. Inside lever is always free for immediate egress.

ND53PD ANSI F109
Entrance Lock
Turn/push-button locking; pushing and turning button locks outside lever, requiring use of key until button is manually unlocked. Push-button locking; pushing button locks outside lever until unlocked by key or by turning inside lever. Inside lever is always free for immediate egress.

ND60PD ANSI F88
Vestibule/Classroom Security Lock
Latch retracted by key from outside when outside lever is locked by key in inside lever. Inside lever is always unlocked. Inside lever is always free for immediate egress.

ND66PD ANSI F91
Store Lock
Key in either lever locks or unlocks both levers.

ND70PD ANSI F84
Classroom Lock
Outside lever locked and unlocked by key. Inside lever always unlocked. Inside lever is always free for immediate egress.

Schlage - *ND Locks*

ND73PD ANSI F90
Corridor Lock
Locked or unlocked by key from outside. Push button locking from inside. Turning inside lever or closing door releases button. When outside lever is locked by key it can only be unlocked by key. Inside lever is always unlocked. Inside lever is always free for immediate egress.

ND75PD ANSI FIIO
Classroom Security Lock
Key in either lever locks or unlocks outside lever. Inside lever is always unlocked. Inside lever is always free for immediate egress.

ND80PD ANSI F86
Storeroom Lock
Outside lever fixed. Entrance by key only. Inside lever always unlocked. Inside lever is always free for immediate egress.

ND80PDEL
Electrically Locked (Fail Safe)
Outside lever continuously locked electrically. Unlocked by key outside or by switch or power failure. Auxiliary latch deadlocks latchbolt when door is closed. Inside lever always free for immediate exit. Inside lever is always free for immediate egress.

ND80PDEU
Electrically Unlocked (Fail Secure)
Outside lever continuously locked until unlocked by key or electric current. Auxiliary latch deadlocks latchbolt when door is closed. Inside lever always free for immediate exit. Inside lever is always free for immediate egress.

ND82PD ANSI F87
Institution Lock
Both levers fixed. Entrance by key in either lever.

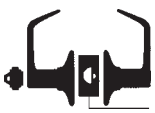

ND85PD
Faculti Restroom Lock
Outside lever fixed. Entrance by key only. Push-button in inside lever activates visual "occupancy" indicator, allowing only emergency master key to operate. Turning inside lever or closing door releases visual occupancy indicator. Rotation of inside spinner-button provides lock-out feature by keeping indicator thrown. Inside lever is always free for immediate egress.

ND91PD ANSI F82
Entrance/Office Lock
Push-button locking. Push-button disengages outside lever until unlocked with key or by turning inside lever.

ND92PD ANSI F109
Entrance Lock
Turn/push-button locking; pushing and turning button disengages outside lever, requiring use of key until button is manually unlocked. Push-button locking; pushing button disengages outside lever until unlocked by key or by turning inside lever.

ND93PD ANSI F88
Vestibule Lock
Latch retracted by key from outside when outside lever is disengaged by key in inside lever. Inside lever is always unlocked.

ND94PD ANSI F84
Classroom Lock
Outside lever disengaged and unlocked by key Inside lever always unlocked.

ND95PD ANSI F110
Classroom Security Lock
Key in either lever locks or unlocks outside lever. Inside lever is always unlocked.

ND96DP ANSI F86
Store Room
Outside lever always disengaged. Entrance by key only. Inside lever always unlocked.

Schlage - *ND Locks*

ND Series Latches & Parts

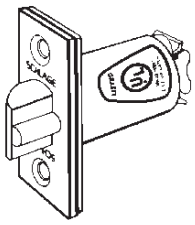

LATCH 13-047
Dead Latch
Dimension:
1-1/8" x 2-1/4" square corner
1/2" throw
2-3/4 Backset

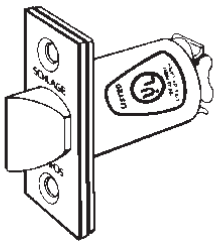

LATCH 13-048
Spring Latch
Dimension:
1-1/8" x 2-1/4" square corner
1/2" throw
2-3/4 Backset

ND SERIES PARTS

T STRIKE
10-013

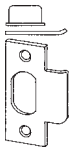

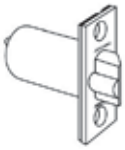

14-028
3-3/4" Square
Corner Deadlatch

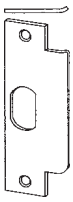

10-025
ANSI Strike

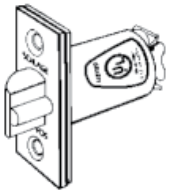

140-47
LATCH
2-3/8DL

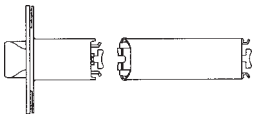

43-005 Link

K510-066
Dust Box

Stocked Product:

10-013	**605,613,625,626**
10-025	**605,613,619,625,626**
10-019	**605,613,625**
43-005	**N/A**
13-047	**605,613,625,626**
13-048	**605,613,625,626**
14-028	**613,626**
14-047	**605,613,625,626**
K510-066	**N/A**
14-001	**605,613,626**

Schlage - *ND Locks*

Stocked Product

STYLE	FN	FINISH
Rhodes	170	605,613,619,625,626
	10	605,613,619,625,626
	25	626
	40	605,613,619,625,626
	50	605,613,619,625,626
	53	605,613,619,625,626
	60	626
	66	626
	70	605,613,619,625,626
	73	626
	75	626
	80	605,613,619,625,626
	82	613,626
	85	626
	91	626
	92	613,626
	93	613,626
	94	613,626
	95	626
	96	613,626

STYLE	FN	FINISH
Sparta	170	605,613,619,625,626
	10	605,613,619,625,626
	40	605,613,619,625,626
	50	605,613,619,625,626
	53	605,613,619,625,626
	60	626
	66	626
	70	605,613,619,625,626
	80	605,613,619,625,626
	85	626
	92	626
	93	626
	94	626
	96	626

STYLE	FN	FINISH
Omega	170	605,613,619,625,626
	10	605,613,619,625,626
	40	605,613,619,625,626
	50	605,613,619,625,626
	53	605,613,619,625,626
	66	626
	70	605,613,619,625,626
	80	605,613,619,625,626

Less Cylinder

STYLE	FN	FINISH
Rhodes	53	613,626
	80	613,626
Sparta	53	626
	80	613,626

Electrified

STYLE	FN	FINISH
EL		
Rhodes	80	626
Sparta	80	626
EU		
Rhodes	80	626
Sparta	80	626

"J" PREP OPTION

STYLE	FN	FINISH
Rhodes	50	613,626
	53	613,626
	70	613,626
	80	613,626
	91	626
	92	626
	94	626
	96	626
Sparta	50	626
	53	613,626
	70	613,626
	80	613,626
	92	626
	94	626
	96	626

"B" PREP OPTION

STYLE	FN	FINISH
Rhodes	50	613,626
	53	613,626
	70	613,626
	80	613,626
	91	613,626
	92	613,626
	93	626
	94	613,626
	96	613,626

Schlage - *NDE Locks*

NDE Series - Wireless Lock

Standard Features:

Certification	ANSI ANSI/BHMA A156.25-2013, A156.2-2011, Series 4000, Grade 1, UL 294, UL 10C
Latch	1-1/8" x 2-1/4", Square corner faceplate, 1" housing diameter, 1/2" throw
Strike	1-1/4" x 4-7/8", ANSI, Square corner, with DPS magnets, no box
Backset	2-3/4"
Cylinder	Classic C keyway
Door Range	1-5/8" - 2"
Users	Up to 5,000
Audits	Up to 2,000

Sparta

Rhodes

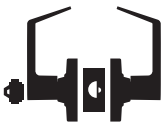

NDE Series wireless locks utilize the standard ND cylindrical door prep

Options:

- Available prepped for Removable Core (RC) less core; specify "J"
- Available prepped for Best IC Core (Small Format) less core specify "B"

NDE80PD F86 Storeroom Lock with Vandlgard Lockset is normally secure with outside lever disengaged. Valid credential or key momentarily unlocks door. Valid credential may be used to change to a passage or secured state. Inside lever always allows free egress.

Stocked Product

NDE 80P	Rho/Spa	626, 643E
NDE 80J	Rho/Spa	626, 643E
NDE 80B	Rho	626
7410	Proximity Cards	
7610	Proximity Key Fob	

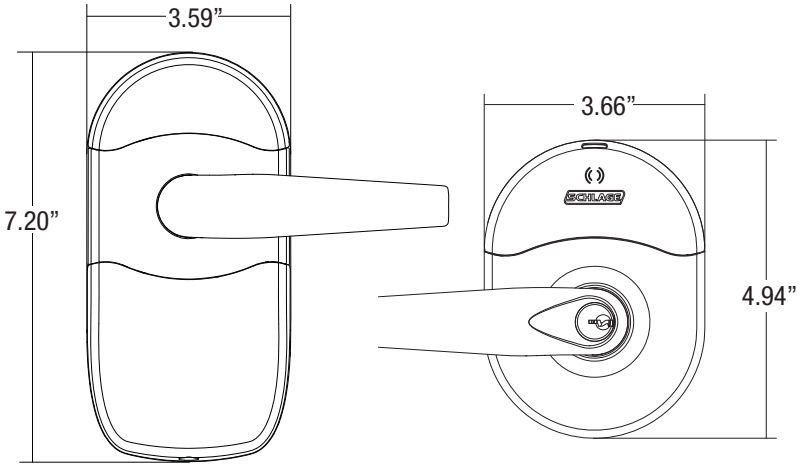

Schlage - *F Locks*

F Functions – ANSI A156.2, Series 4000, Grade 2

- Radius and circular face plates for F10/F40 functions
- Radius, square, and circular face plates for F51, F358 function
- 6 pin solid brass cylinder, keyed 5 pin
- Universal backset either 2-3/8" or 2-3/4"
- 1-3/8" - 1-3/4" thick door

F60

Entrance Lock

Deadbolt thrown or retracted by key from outside or by inside turn unit. Latch retracted by thumbpiece from outside or by inside knob/lever.
Consists of:
F58 Outside trim
F59 Inside trim

F93

Dummy Trim

Outside and Inside Dummy Trim
For use as door pull or as dummy trim on inactive leaf of pair of doors. Fixed thumbpiece and inside knob/lever. Dummy cylinder with inside plate.
Consists of:
F92 Outside trim
F94 Inside trim

F10 ANSI F75

Passage Latch

Both knobs/levers always unlocked.

F170

Single Dummy Trim

Dummy trim for one side of door. Used for door pull or as matching inactive trim.

F40 ANSI F76

Bath/Bedroom Privacy Lock

Push-button locking. Can be opened from outside with small circular tool. Turning inside knob/lever releases button.

F51 ANSI F81

Entrance Lock

Unlocked by key from outside when outer knob is locked by turn-button in inside knob. Inside knob/lever always unlocked.

Schlage - *F Locks*

F Locks - Handlesets

F58-OUTSIDE KEYED

F92-OUTSIDE DUMY TRIM

ADDISON
Symbol **ADD**

CAMELOT
Symbol **CAM**

CENTURY
Symbol **CEN**

PLYMOUTH
Symbol **PLY**

GREENWICH
Symbol **GRW**

Stocked Product:

F58	**Camelot**	505,605,609,613,619,620,622,625,716
F58	**Century**	605,619,625
F58	**Greenwich**	716
F58	**Plymouth**	505,605,609,613,619,620,625,716
F58	**Addison**	505,619,621,622,625,716
F92	**Camelot**	505,605,609,613,619,620,716
F92	**Century**	605,625
F92	**Plymouth**	505,605,609,613,619,620,625,716

Schlage - *F Locks*

F Locks – Handlesets Inside Trim

F59 – **INSIDE**

F94 – **DUMMY**

ACCENT
Symbol **ACC** (Handed)

LATITUDE
Symbol **LAT**

FLAIR
Symbol **FLA** (Handed)

SIENA
Symbol **SIE**

AVANTI
Symbol **AVA** (Handed)

GEORGIAN
Symbol **GEO**

ORBIT
Symbol **ORB**

PLYMOUTH
Symbol **PLY**

MANHATTAN
Symbol **MNH** (Handed)

Stocked Product:

F59	Accent	605,609,613,619,620,621,622,625,716
F59	Avanti	605,613,619,620,625,716
F59	Flair	605,609,613,619, 620, 625,716
F59	Georgian	605,609,619,620,621,716
F59	Latitude	619,625
F59	Manhattan	605,619,625,626
F59	Orbit	605,613,619,620,625
F59	Plymouth	605,609,613,619,620,622,625,716
F59	Siena	605,609,613,619,620,625,716
F94	Accent	605,609,613,619,620,625,716
F94	Avanti	605,613,619,620,625,716
F94	Flair	605,609,613,619, 620, 625,716
F94	Georgian	605,609,619,620,716
F94	Manhattan	605,619,625,626
F94	Orbit	605,613,619,620,625
F94	Plymouth	605,613,619,620,625,716
F94	Siena	605,609,613,619,620,625

Schlage - *F Locks*

F Locks – Knobs & Levers

BELL
Symbol **BEL**

GEORGIAN
Symbol **GEO**

ORBIT
Symbol **ORB**

PLYMOUTH
Symbol **PLY**

SIENA
Symbol **SIE**

ACCENT
Symbol **ACC**

AVANTI
Symbol **AVA**

ELAN
Symbol **ELA**

FLAIR
Symbol **FLA**

JAZZ
Symbol **JAZ**

LATITUDE
Symbol **LAT**

MANHATTAN
Symbol **MNH**

Schlage - *F Locks*

Stocked Products

Accent

F170	605,609,613,619,620,621,622,625.716
F10	505,605,609,613,619,620,621,622,625.716
F40	605,609,613,619,620,621,622,625.716
F51A	505,605,609,613,619,620,621,622,625.716

Avanti

F170	605,613,619,620,625.716
F10	505,605,609,613,619,620,625.716
F40	605,609,613,619,620,625.716
F51A	505,605,613,619,620,716

Bell

F170	626
F10	505,605,626
F40	605,626
F51A	505,605,626

Elan

F170	605,609,625,626
F10	605,609,625,626
F40	605,609,625,626
F51A	505,626

Flair

F170	605,609,613,619,620,625,626.716
F10	505,605,609,613,619,620,625,626.716
F40	605,609,613,619,620,625,626.716
F51A	505,605,609,613,619,620,625,626,716

Georgian

F170	605,609,619,620,621,625.716
F10	505,605,609,619,620,621,625.716
F40	605,609,619,620,621,625.716
F51A	505,605,609,619,620,621,716

F40 Split Finish x 619

Siena	613

F40 Split Finish x 625

Accent	605,620
Flair	605
Georgian	605,619
Orbit	605
Siena	605,613
Plymouth	605

F40 Split Finish x 625

Siena	613

Jazz

F170	605,609,619,626
F10	605,609,619,626
F40	605,609,619,626

Latitude

F170	619,625,716
F10	619,625,716
F40	619,625,716
F51A	619,625,716

Manhattan

F170	605,619,625,626
F10	605,619,625,626
F40	605,619,625,626
F51A	605,619,625,626

Merano

F170	619,625,716
F10	619,625,716
F40	619,625,716
F51A	619,625,716

Orbit

F170	605,609,613,619,620,625.626
F10	505,605,609,613,619,620,625.626
F40	605,609,613,619,620,625.626
F51A	505,605,609,613,619,620,625,626

Plymouth

F170	505,605,613,619,620,622,625,626,716
F10	505,605,613,619,620,622,625,626,716
F40	605,613,619,620,622,625,626,716
F51A	505,605,613,619,620,622,625,626,716

Siena

F170	605,609,613,619,620,625,716
F10	505,605,609,613,619,620,625,716
F40	605,609,613,619,620,625,716
F51A	505,605,609,613,619,620,625,716

Schlage - *F Parts*

F Lock - Strikes

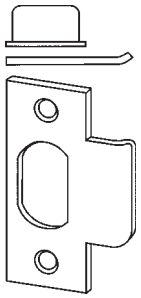

10-001
Square corner
T Box Strike
1-1/8" x 2-3/4"

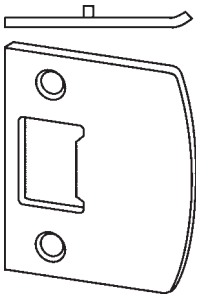

10-026
Square corner
Full lip, no box
1-5/8" x 2-1/4"

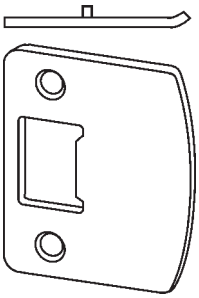

10-027
1/4" radius, round corner
Full lip, no box
1-5/8" x 2-1/4"

F Series - Latches And Parts

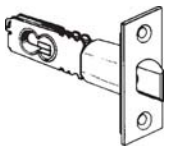

16-200
Spring latch
Square corner
2-3/8" or 2-3/4" BS

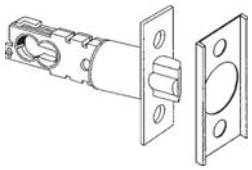

16-207
Dead latch
Square corner
2-3/8" or 2-3/4" BS
with A501-878 Front Adapter

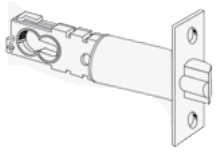

16-126
Dead Latch
Square Corner
5" BS

F506-237
For latch or strike
PFH wood screws

Stocked Products

10-001 Square Corner Strike,1-1/8" X 2-3/4" FP
Finishes *605,613,619, 625,626*

10-026 Square Corner Strike, Full Lip,1-5/8" X 2-1/4"Face Plate
Finishes *605,609,613,619,620,626*

10-027 Round Corner Strike,1/4" Radius, Full Lip,1-5/8" X 2-1/4" FP
Finishes *605.609,613,619,620,626*

16-200 Spring Latch, Square Corner,2-3/8"-2-3/4"BS,
16-207 Dead Latch Square Corner, 2-3/8"-2-3/4" BS
Above Stock Finishes: 605,609,613,619,620,626

16-126	*Dead Latch, Square Corner, 5" BS*	*605*
F506-237	*Mounting Screws F/Strike or Latch*	*605,632*

Schlage - *F Locks*
Collection Series

Champagne x Andover

Callington x Andover

(FA)Merano x Andover

St. Annes x Andover

Sienna x Andover

Andover x Andover

Accent x Addison

Accent x Camelot

Accent x Wakefield

Avila x Addison

Georgian x Addison

Georgian x Camelot

Latitude x Century

Flair x Brookshire

Merano x Century

Manhattan x Century

Siena x Wakefield

Georgian x Brookshire

Schlage - *F Locks*
Collection Series

Stocked Products

Andover Rose (concealed screw)	
F170 Andover	605,609,613,619,620,625,626,716
F10 Andover	605,609,613,619,620,625,626,716
F40 Andover	605,609,613,619,620,625,626,716
F51A Andover	605,609,613,619,620,626,716
F170 Champagne	605,613,619,620,625,716
F10 Champagne	605,613,619,620,625,716
F40 Champagne	605,613,619,620,625,716
F51A Champagne	505,613,619,620,625,716
F170 Callington	605,609,613,619,620,622,625,716
F10 Callington	505,605,609,613,619,620,622,625,716
F40 Callington	605,609,613,619,620,622,625,716
F51A Callington	505,613,619,622,716
F170 Sienna	605,609,613,619,620,622,625,716
F10 Sienna	605,609,613,619,620,622,625,716
F40 Sienna	605,609,613,619,620,622,625,716
F51A Sienna	505,613,619,620,622,625
FA40 Merano	622
FA51 Merano	619,622,625,626,716
F170 ST Annes	605,609,613,619,620,625,716
F10 ST Annes	605,609,613,619,620,625,716
F40 ST Annes	605,609,613,619,620,625,716
F51A ST Annes	609,613,619,716

Addison Rose	
F170 Accent	619
F10 Accent	619
F40 Accent	619
F51A Accent	619
F170 Avila	619
F10 Avila	619
F40 Avila	619
F51A Avila	619
F170 Georgian	619,621
F10 Georgian	619,621
F40 Georgian	619,621
F51A Georgian	619,621

Brookshire Rose	
F170 Flair	609
F10 Flair	609
F40 Flair	609
F51A Flair	609
F170 Georgian	609
F10 Georgian	609
F40 Georgian	609
F51A Georgian	609

Camelot Rose	
F170 Accent	619,716
F10 Accent	619,716
F40 Accent	619,716
F51A Accent	619,716
F170 Georgian	619
F10 Georgian	619
F40 Georgian	619
F51A Georgian	619

Century Rose	
F170 Latitude	619, 625
F170 Merano	716
F170 Manhattan	619
F10 Latitude	619, 625
F10 Merano	716
F10 Manhattan	619
F40 Latitude	619, 625
F40 Merano	716
F40 Manhattan	619
F51A Latitude	619, 625
F51A Merano	716
F51A Manhattan	619

Wakefield Rose	
F170 Accent	619,716
F10 Accent	619,716
F40 Accent	619,716
F51A Accent	619,716
F170 Sienna	619,716
F10 Sienna	619,716
F40 Sienna	619,716
F51A Sienna	619,716

Reversible Levers

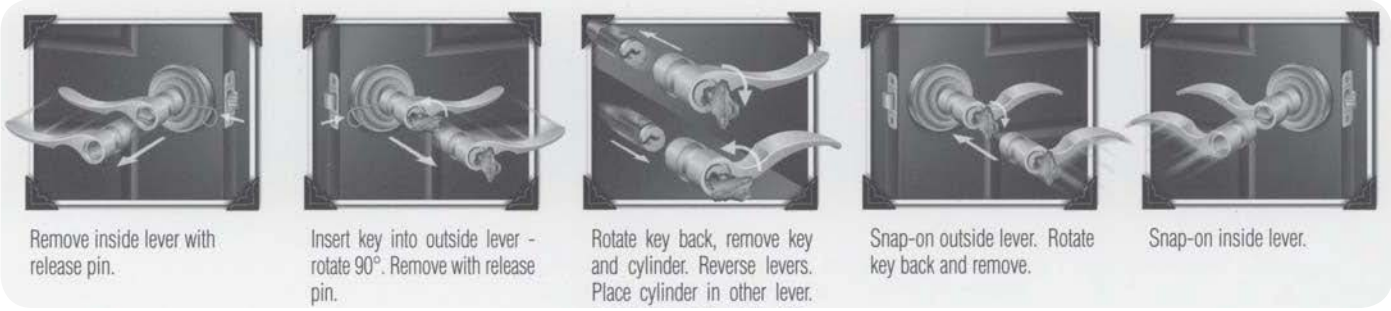

Schlage - *L Locks*

Standard Features:

Certification	L9000: ANSI A156.13, 1994, Series 1000, Grade 1 Operational, Grade 1 Security, UL Listed for 3hour fire door (except L9076 and L9077). With Interchangeable Core Cylinders: Grade 2 Security
Case Size	L9000: 4-7/16" x 6-1/6" x 1"; L400: 4-7/16" x 3-5/8" x 1"
Armor Front	L9000: 1-1/4" x 8"; L400: 1-1/4" x 5-19/32"
Deadbolt	1" Throw stainless steel
Latchbolt	3/4" Throw stainless steel with anti-friction tongue
Strike	L9000: 1-1/4" x 4-7/8" Square Corner, 1-3/16" lip, box
Backset	2-3/4"
Cylinder	Cassic C keyway Also available in Schlage Everest C123 keyway.
Door Range	1-3/4"

L9010 ANSI F01
Passage Latch
Latchbolt retracted by knob/lever from either side at all times.

L9040 ANSI F22
Bath/Bedroom Privacy Lock
Latchbolt retracted by knob/lever from either side unless outside is locked by inside turn piece. Turning inside knob/lever or closing door unlocks outside knob/lever. To unlock from outside, remove emergency button, insert emergency turn (furnished in access hole and rotate.)

L9050 ANSI F04
Office and Inner Entry Lock
Latchbolt retracted by knob/lever from either side unless outside is made inoperative by key outside or by turning inside thumbturn. When outside is locked, latchbolt is retracted by key outside or by knob/lever inside. Outside knob/lever remains locked until thumbturn is returned to vertical or unlocked by key. Auxiliary latch deadlocks latchbolt when door is closed.

L9070 ANSI F05
Classroom Lock
Latchbolt retracted by knob/lever from either side unless outside is locked by key. Unlocked from outside by key. Inside knob/lever always free for immediate exit. Auxiliary latch deadlocks latchbolt when door is closed.

L9080 ANSI F07
Storeroom Lock
Latchbolt retracted by key outside or by knob/lever inside. Outside knob/lever always inoperative. Auxiliary latch deadlocks latchbolt when door is closed.

L9453 ANSI F20
Entrance Lock
Latchbolt retracted by knob/lever from either side unless outside is locked by 20° rotation or thumbturn. Deadbolt thrown or retracted by 90° rotation of thumbturn. When locked, key outside or knob/lever inside retracts deadbolt and latchbolt simultaneously. Outside knob/lever remains locked until thumbturn is restored to vertical position. Throwing deadbolt automatically locks outside knob/lever. Auxiliary latch deadlocks latchbolt when door is closed.

L9456 ANSI F13
Corridor Lock
Latchbolt retracted by knob/lever from either side. Deadbolt thrown or retracted by key outside or inside thumbturn. Throwing deadbolt locks outside knob/lever. Turning inside knob/lever simultaneously retracts deadbolt and latchbolt and unlocks outside knob/lever.

L9465
Closet/Storeroom Lock
Latchbolt retracted by knob/lever from either side. Deadbolt thrown or retracted by key outside.

Schlage - *L Locks*

L Locks

03A
A ROSE 2-1/8" DIA.

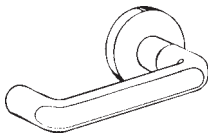

06A
A ROSE 2-1/8" DIA.

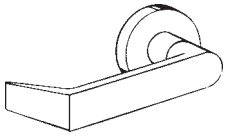

17A
A ROSE 2-1/8" DIA.

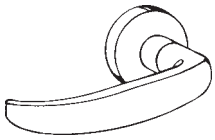

Stocked Product
613, 625, 626

SEE PRICE PAGE FOR B ROSE (2-9/16" DIA.) SWAP

03L

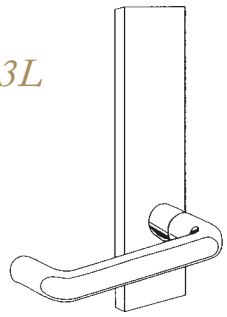

06L

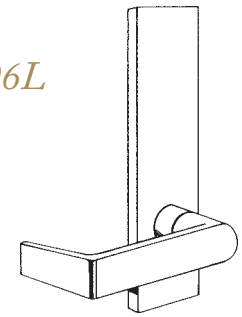

17L

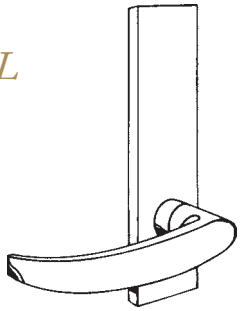

Stocked Product
626

L Locks - Parts

10-072
STANDARD STRIKE

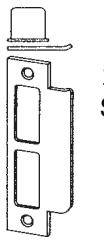

L283-040
SPRING CAGE

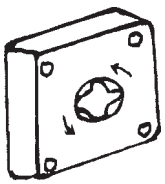

L9090
EL/EU CHASSIS ONLY

Stocked Products:

10-072	Strike,1-1/4" X 4-7/8"	605,613,626
10-072-1-1/2"	Strike,1-1/2" X 4-7/8"	613,625,626

L283-040 Spring Cage for Levers
L283-412 RX module w/screw
L9090LB Chassis only EU/EL

Schlage - *S Locks*

S Locks - A156.2 Series 4000 Grade 2

Standard Features:

Certification	ANSI A156.2, Series 4000, Grade 2
Latch	1" x 2-1/4", Square corner
Strike	ANSI strike 10-025
Backset	Adjustable 2-3/8" or 2-3/4"
Door Range	1-3/8" - 1-7/8" thickness
Keyway	Classic "C", Everest available upon request

SATURN - SAT

S10S ANSI F75
Passage Latch
Both levers always unlocked.

NEPTUNE - NEP

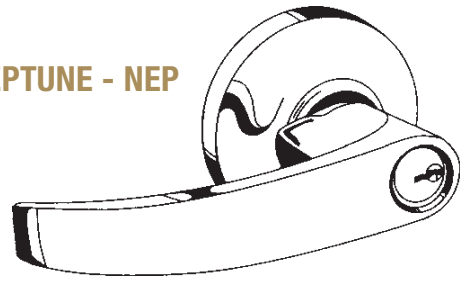

S40S ANSI F76
Bath/Bedroom Privacy Lock
Push-button locking. Can be opened from outside with small screwdriver. Turning inside lever or closing door releases button.

S80PD ANSI F86
Storeroom Lock
Outside lever fixed. Entrance by key only. Inside lever always unlocked.

S51PD ANSI F81
Entrance Lock
Unlocked by key from outside when outside lever is locked by turn-button in inside lever. Inside lever always unlocked.

S70PD ANSI F84
Classroom Lock
Outside lever locked and unlocked by key. Inside lever always unlocked.

Stocked Product:

FUNCTION	LEVER	FINISH
S10	Neptune	605,613,626
	Saturn	605,613,626
S40	Neptune	605,613,626
	Saturn	605,613,626
S51	Neptune	605,613,626
	Saturn	605,613,626
S70	Neptune	605,613,626
	Saturn	605,613,626
S80	Neptune	605,613,626
	Saturn	605,613,626

Schlage - *CS210 Locks*

CS210PD Locks

Standard Features:

Certification:	ANSI/BHMA Certified A156.12-2005, Grade 2, UL listed for 3-hour fire door
Deadbolt:	1 X 2-1/4", dual option faceplate, (square corner standard, round corner included in package), 1" housing diameter, 1" throw
Latch	1" x 2-1/4" dual option faceplate (square corner standard, round corner included in package). 1" edge bore required
Strikes:	1-1/8" X 2-3/4", Square corner (deadbolt) and 1-5/8" X 2-1/4", Square corner, full lip (deadlatch)
Backset:	Adjustable backset, fits 2-3/8" or 2-3/4"
Cylinders:	6-pin upper cylinder, solid brass, keyed 6-pin, C123 keyway, keyed different (KD)
Door Range:	1-3/4" to 2"
Keys:	Nickel silver cut keys, 6-pin, C123 section
Center to Center:	**Fits 4" or 5-1/2" center to center door preps ***
	** 5-1/2" center-to-center default set-up from factory*

CS210PD F95
Entrance, Single Locking
Deadbolt operated by key from outside or by turn unit from inside. Bolt automatically deadlocks when fully thrown. Latch retracted by lever fromeither side. Turning inside lever retracts deadbolt and latch simultaneously for immediate exit.

Stocked Product:

Design	**Finishes**
Camelot x Saturn	626, 643e

Schlage - *S200 Locks*

S 200 Locks – ANSI A156.12, 1992, Grade 2

S210D ANSI F95

Entrance, Single Locking

Deadbolt operated by key from outside or by turn unit from inside. Bolt automatically deadlocks when fully thrown. Latch retracted by lever from either side. Turning inside lever retracts deadbolt and latch simultaneously for immediate exit.

S251 NEP

S251PD ANSI F97

Entrance, Double Locking

Deadbolt operated by key from outside or by turn unit from inside. Bolt automatically deadlocks when fully thrown. Outside lever unlocked by key from outside when locked by turn button in inside lever. Turning inside lever retracts deadbolt and latch simultaneously for immediate exit. Latch automatically deadlocks when door is closed.

S251 SAT

Standard Features:

All S200 stocked standard.
2-3/4" backset, optional 2-3/8" backset available.
UL Listed for 3 hour fire door.

Strike	1-1/8" x 2-1/4" square corner faceplate/T Strike
Door Range	1-3/8" - 2" thickness
Keyway	Classic "C", Everest available upon request
Center to Center	4" CTC

Stocked Product

FUNCTION	DESIGN	FINISHES
S210	Neptune	626
	Saturn	613,626
S251	Neptune	626
	Saturn	613,626

Standard Deadlatch

16-228 2-3/8" or 2-3/4" BS

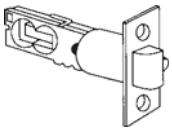

Stocked Parts 613,626 finishes

16-228 Dead Latch, Square Corner, 2-3/8"-2-3/4"BS, 1-1/8" X 2-1/4" Face Plate, 1" hsg

Schlage

Cylinders & Tools

20-001 **MORTISE CYLINDER** 1-1/8" HAS L583-476, 1-1/4" HAS L583-477
09-485 **MORTISE CYLINDER** 1-1/8" HAS L583-474, 1-1/4" HAS L583-475

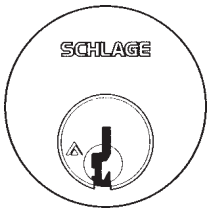

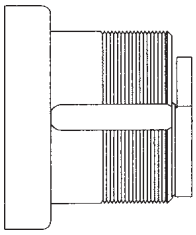

CYLINDER WITH COMPRESSION RING SPRING

STANDARD CAMS & VON DUPRIN CAMS

L583-476

L583-477

"L" LOCK CAMS

L583-474

L583-475

"A/R" CAMS

L583-446

FOR 1-1/8", 1-3/8", 1-5/8"

L583-447

FOR 1-1/4", 1-1/2", 1-3/4"

Stocked Product

CYLINDER TYPE	LENGTH	KEYWAY	FINISHES
20-001	1-1/8",1-1/4"	C, E	605,613,625,626
20-001	1-3/8"	C, E	613,625
09-485	1-1/8",1-1/4"	C, E	605,613,625,626
MCYL118EV(09-485)	1-1/8"	C123 EVEREST(EV)	605,613,625,626

20-022 – Rim Cylinders

Horizontal tailpiece (# 2 bar)

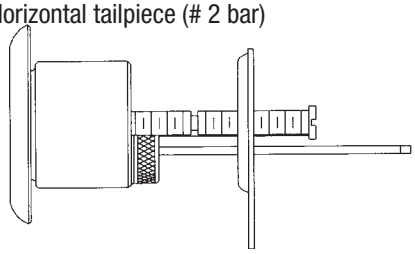

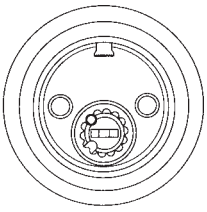

Stocked Product

CYLINDER TYPE	KEYWAY	FINISHES
20-022	C, E	605,613,626,626
20-022	C123(EV)EVEREST	613,626

40-100 Universal Cylinders For A, AL, D, H & ND Series

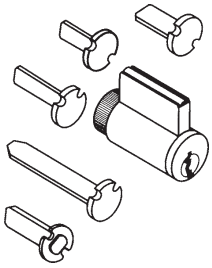

- A-series (all designs)
- AL-series
- D-series knobs
- D-series levers
- H-series knob (all designs)
- ND-series levers

Cylinders are furnished 0-bitted with two (2) blank keys

Stocked Product

CYLINDER TYPE	KEYWAY	FINISHES
40-100	C, E, C123	605,626
40-100	CE, EF, F, FG, G	626

Schlage

Cylinders & Tools

23-030 Interchangeable Core

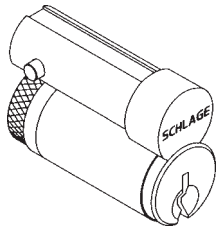

Stocked Product:

23-030	Keyways C,E	606,626
23-030	Keyway C123	606,626
23-030	Keyway CE	626
23-030	Keyway E	626
23-030	Keyway F	626
23-030	Keyway G	626
23-030	A622 Temp Core	622
48-056A	Temp Control Key	
48-101A	Temp Operating Key	

Mortise Cylinder - Full Size Interchangeable Core

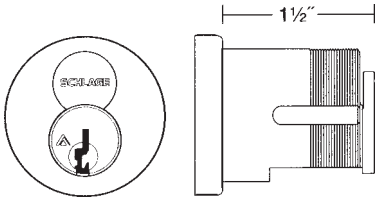

ITEM	CONTAINS	APPLICATION
26-091	Complete with compression ring & spring	Von Duprin straight cam
30-007	Housing only with compression ring & spring	L lock, L escutcheon
30-137	Housing only with compression ring & spring and 3/8" blocking ring	L lock, A & B rose
80-108	SFIC Housing only less compression ring & sping	L lock cam

Stocked Product:

26-091	Complete Cylinder, "C" "1" Bitted	613,626 Excludes Control Keys
30-007	Mortise Housing only F/Lock L Trim	613,626
30-137	Mortise Housing only F/Lock A Trim	613,625,626
80-108	Mortise Housing only, SFIC, With L Cam	613,626

Rim Cylinder - Full Size Interchangeable Core

20-057

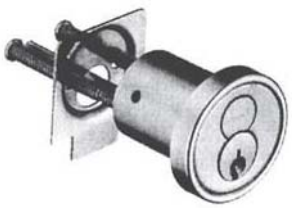

Stocked Product:

20-057	Keyway C	613,626
20-079	Rim Housing Only less core	613,626
80-129	Rim Housing Only, SFIC format	613,626

Schlage

Key Blanks

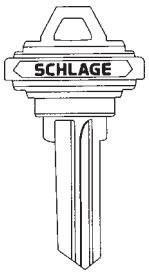

35-100
5 Pin Standard

35-101
6 Pin Standard

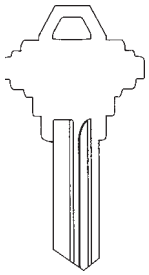

35-130
5 Pin Unembossed

35-131
6 Pin Unembossed

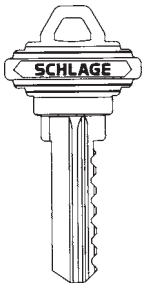

35-102
Emergency Key Blank

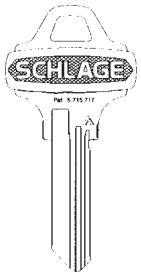

35-009
Everest

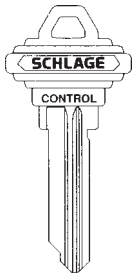

35-056
Interchangeable Core Control Key Blank

35-003
Control Keyblank Everest

Stocked Product

KEYBLANK	KEYWAY
35003	C123
35100	C, E, F
35101	C, CE, E, EF, FG
35130	E
35131	C, E, F
35009	C123
35056	C, CE, E, EF, F, G
35102	C, E

Pins & Misc.

Stocked Product

34-101,102,103	Top pins (100 per bag)
34-202 thru 34-209	Master Pins (100 per bag)
34-300 thru 34-309	Bottom pins (100 per bag)
C503-113	Springs (100 per bag)
34-401	Construction Balls

Schlage

Tools & Kits

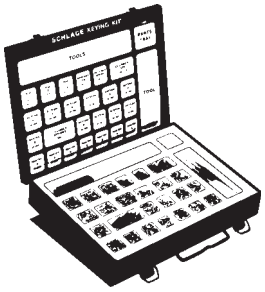

40-119

Metal keying kit with tools

- Bottom pins
- Top pins
- Retainer caps
- Retainer cap pin springs
- Shim stock
- Follower bar
- Master pins
- Pin springs
- Retainer cap pins
- Tweezers
- Removal tool

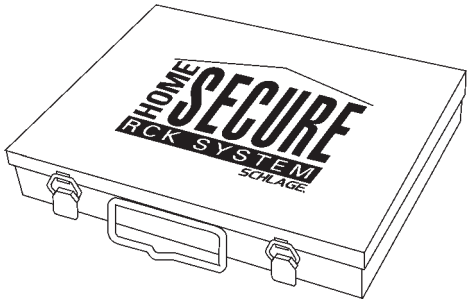

40-133

Home secure keying kit

- Bottom pins
- Top pins
- Removal tool
- Cylinder springs
- Retaining rings
- Retainer cap pin springs
- B-series cylinder bars
- B-series drivers
- Construction balls
- Master pins
- Follower bar
- Key gage
- tweezers
- Retainer caps
- Shim stock
- Retainer cap pins

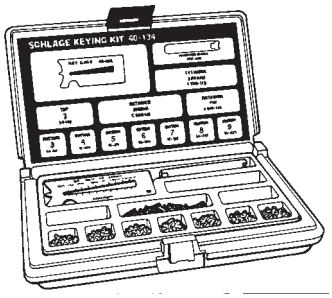

40-134

Plastic keying kit

- Bottom pins
- Top pins
- Follower bar
- Pin springs
- Retainer cap pins
- Key gage

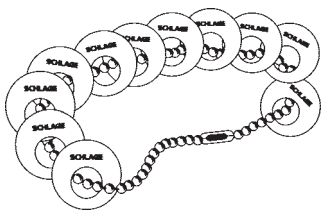

39-029

Finish selection kit

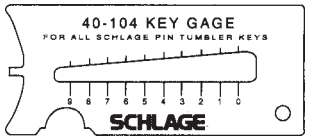

40-104

Standard

40-128 SFIC

Key gage

40-080

Thru bolt jig

Stocked Product

40-119	Metal Keying Kit
40-133	Home Security Keying Kit
40-134	Plastic Keying Kit
40-104	Standard Key Gauge
40-128	SFIC Key Gauge
40-080	Thru Bolt Jig
39-029	Finish Selection Kit
M540-501	Follower Tool
M540-056	Cap Removal Tool

Schlage

KS23D

Features & Specifications:

- Solid Brass Body Resists Corrosion For All Weather Performance
- Molybdenum Hardened Steel Shackle Offers Greater Cut Resistance
- Double Deadbolt Locking Mechanism Provides Extra Security
- Patented Interchangeable Shackle Design Allows For Easy Disassembly

Standard Cylinder Features Include:
- Schlage Conventional Key-In-Knob (KNK) Cylinder
- 6-Pin Solid Brass Cylinder (Pinned 5) Offers Increased Pick Resistance
- Two Nickel Silver Cut Schlage Keys

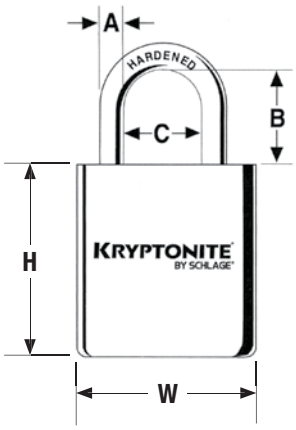

Kryptonite Brass Padlock
KS23D

ASTM Standards:

- Meets or exceeds ASTM standards for standard steel shackle, shackle cutting and corrosion resistance.

Body Size
W 1-25/32”
H 2-3/16”

Shackle Dimension
A 5/16”
B 1-1/2”
C 3/4”

Stocked Product

KS23D
C Keyway 606

Schlage - *Electronic Locks*

CO 100 - Offline Electronic Lock

Standard Features:

- Manually Programmable
- Up to 500 unique 3-6 digit PIN codes stored on the lock
- ANSI/BHMA A156.25 Grade 1 certified and UL 294 listed
- Classroom/Storeroom function and Office function available
- Chassis options include cylindrical, mortise, and exit trim
- Compatible with most major brands of key systems and exit devices
- Normal, toggle, pass through, and freeze credential attributes available

Images shown are not to scale.

Stocked Products

ITEM #	DESCRIPTION	FINISH
CO-100-CY-70-KP-RHO	KEYPAD,STORAGE/CLASSROOM CYLINDER	626
CO-100-CY-50-KP-RHO	KEYPAD,OFFICE CYLINDER	626
CO-100-MS-70-KP-RHO	KEYPAD,STOREROOM/CLASSROOM MORTISE	626
CO-100-MS-50-KP-RHO	KEYPAD,OFFICE MORTISE	626

Schlage - *Electronic Locks*

CO 200 – Offline Electronic Lock

Standard Features:

- Computer programmable with audit trail
- Up to 2000 users & up to 2000 audits*
- Up to 32 holidays & 16 time zones*
- ANSI/BHMA A156.25 Grade 1 certified and UL 294 listed
- User rights stored on the lock
- The ability to add and delete users at the lock
- Available in cylindrical, mortise, mortise deadbolt, and exit trim
- Compatible with major brands of key systems and exit devices
- Classroom/Storeroom, Office, and Privacy functions available

**Depending on access control software.*

Images shown are not to scale.

Stocked Products

ITEM #	DESCRIPTION	FINISH
CO-200-CY-70-PRK-RHO	PAD/PROX, STORAGE/CLASSROOM CYLINDER	626
CO-200-CY-50-PRK-RHO	PAD/PROX, OFFICE CYLINDER	626
CO-200-MS-70-PRK-RHO	PAD/PROX, STOREROOM/CLASSROOM MORTISE	626
CO-200-MS-50-PRK-RHO	PAD/PROX, OFFICE MORTISE	626

Schlage - *Electronic Locks*

CO-Series - Exit Trim

Standard Features:

- Multiple Credential Reader Options
- A wide variety of finishes and lever styles
- Powered by 4 AA batteries*
- Compatible with most Standard, FSIC or SFIC keyways from major brands of master key systems including Schlage, Sargent, Corbin, Medeco and Yale
- UL 294 listed and ANSI/BHMA 156.25 Grade 1 certified**

*Excluding 993DT
**UL 294 does not apply to dummy trim devices

Stocked Products

ITEM #	DESCRIPTION	FINISH
CO-100-993R-70-KP-RHO	EXIT TRIM, RIM/CVR	626
CO-100-993S-70-KP-RHO	EXIT TRIM, SVR	626
CO-200-993R-70-PRK-RHO	EXIT TRIM, RIM/CVR	626
CO-200-993S-70-PRK-RHO	EXIT TRIM, SVR	626

Schlage - *Electronic Locks*

Schlage Utility Software (SUS) on the Handheld Device (HHD)

Standard Features:

- Handheld Device with Schlage Utility Software installed
- Touch Screen operation
- Initialize Lock and Accessories with SUS
- Configure and Test Devices

Stocked Products

ITEM #	DESCRIPTION
HHD KIT	HANDHELD PROGRAMMER KIT
SXF7410SCH	100 SCHLAGE PROXIMITY CARDS

SOSS - *Invisible Hinges*

Models 216 & 218

Features

- Security- When closed, the SOSS Invisible Hinge cannot be seen or tampered with. When opened, the riveted hinge pin is non-removable.
- Safety- The moving pivot point remains inside the hinge during travel until fully opened, eliminating an external pinch point on the back side of the door.
- Strength- The installed hinge is firmly anchored in a deep, full mortise, which assists the screws in supporting the door, assuring a stronger, more rigid installation.

Specifications

	216 - 1-3/8" Doors	218 - 1-3/4" Doors
A	1"(25.40mm)	1-1/8"(28.58mm)
B	23/32"(18.26mm)	7/8"(22.23mm)
C	4-5/8"(117.48mm)	4-5/8"(117.48mm)
D	7/32"(5.56mm)	3/8"(9.53mm)
E	1/4"(6.35mm)	1/4"(6.35mm)
F	2-19/32"(65.88mm)	2-7/16"(61.91mm)
G	1/16"(1.59mm)	1/16"(1.59mm)
H	1-7/16"(36.51mm)	1-41/64"(41.67mm)
I	15/32"(11.91mm)	13/32"(10.32mm)

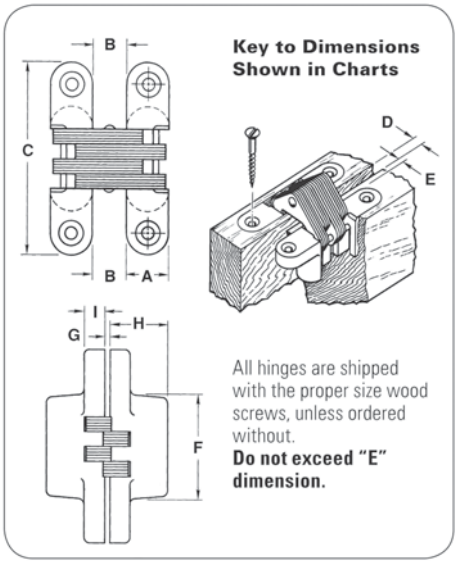

Stocked Product

Item	Finish
216	US4, US26D
218	US4, US26D

Supra

KeySafe (Permanent)

Features:

Permanent KeySafe holds up to five keys and attaches securely to any wall or flat surface with mounting hardware included. The StrongBox design has a solid track record for unmatched quality and security.

- Easy access for family and friends
- Handy key storage for homes, outbuildings, sheds and farm implements

Stocked Product

PART No.	FINISH	LID TYPE
001361	Clay	Push
001365	Titanium	Push
00404	Black	Dial
001011	Titanium	Dial

KeySafe (Portable)

Features:

Pushbutton or Spin-Dial version hangs easily on doorknob, fence, railing or pipe. Just open the lid, lift the shackle and hang. No tools necessary. Portable KeySafe is constructed of sturdy metal with protective rubber shell and is guaranteed never to rust.

- Provides scheduled access for cleaning personnel, pool service and household maintenance
- Change combination as often as needed
- Access to vacation properties and rentals

Stocked Product

PART No.	FINISH	LID TYPE
001352	Black	Push
001192	Titanium	Push
000394	Black	Dial
001010	Titanium	Dial

Taymor - *Cabinet Hardware*

1412 - Bullet Catch

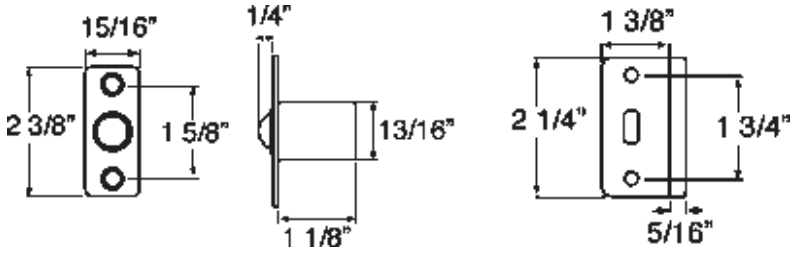

1431 - Roller Catch

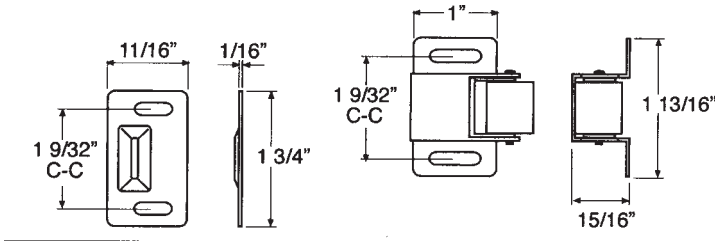

1432 - Drive-in Bullet Catch

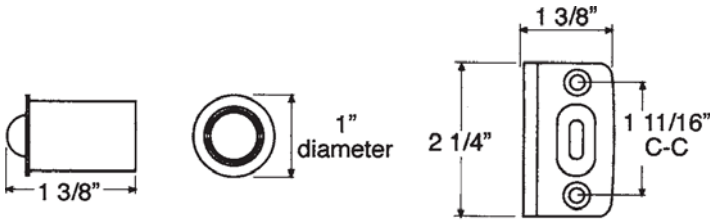

Stocked Product

ITEM	FINISH
1412	10B, 15, 26D
1431	10B, 15, 26D
1432	US3, 10B, 15, 26D

Taymor - *Closet Hardware*

2800 - Shelf and Rod Support

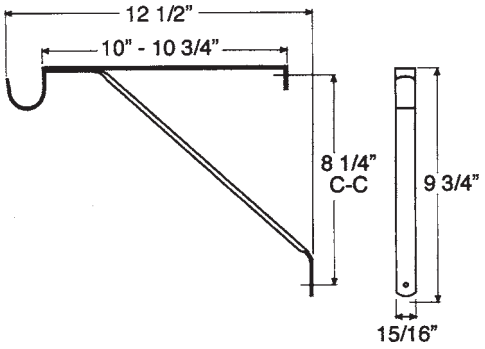

2815 - Fixed Shelf Support

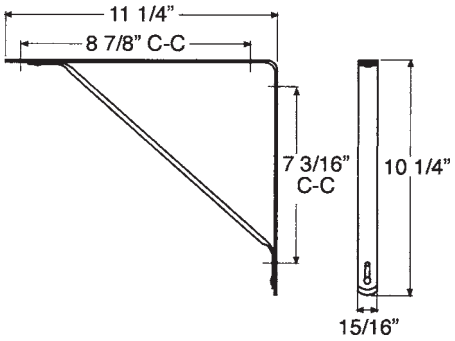

2810 - Shelf and Rod Support

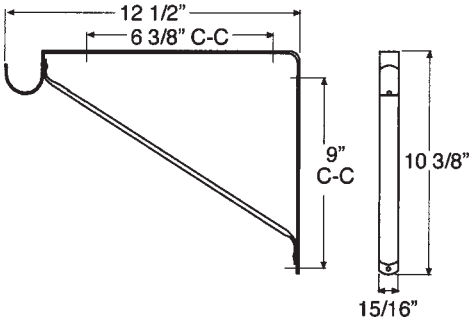

2830 - Pole Socket

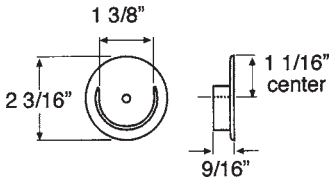

2820 - Pole Socket

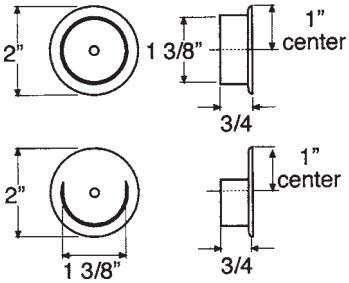

2840 - Pole Socket

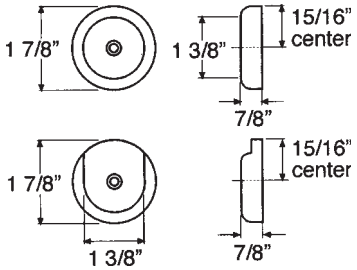

Stocked Product

ITEM	FINISH
2800, 2810 and 2815	Ivory finish
2820	White Finish
2820PB	Polished Brass
2830	White finish
2840	Wood

Taymor - *Surface Bolt & Flush Bolt*

4035 - Surface Bolt

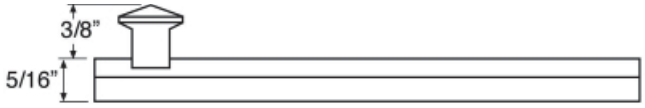

Stocked Product

ITEM	FINISH
4035 Surface Bolt: 4" and 6"	10B, 15, 26D

5316 Radius End Flush Bolt

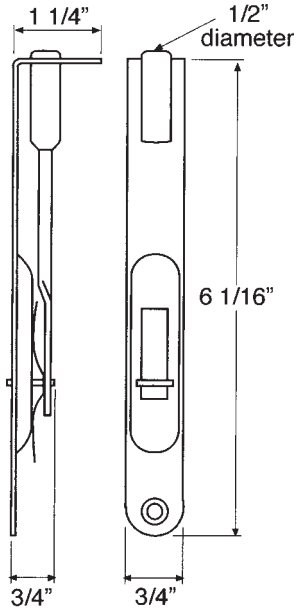

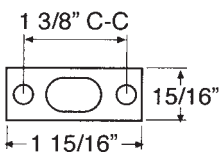

Stocked Product

ITEM	FINISH
5316 Flush Bolt:	US3, 10B, 15, 26D

Taymor - *Door Stops*

4671 - Spring Door Stop 3-1/8”

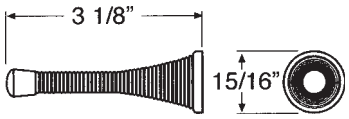

4614 - Hinge Pin Door Stop

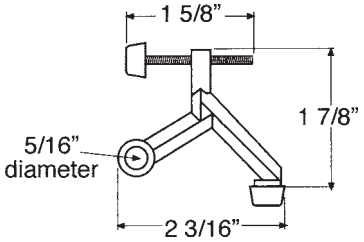

4674 - Extra Long Spring Door Stop

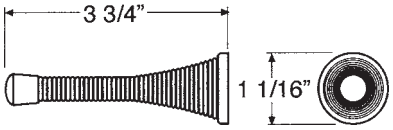

4675 - Spring Door Stop with Fixed Screw

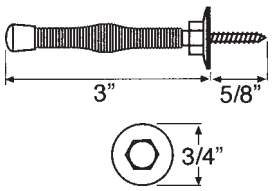

4679 - Door Stop

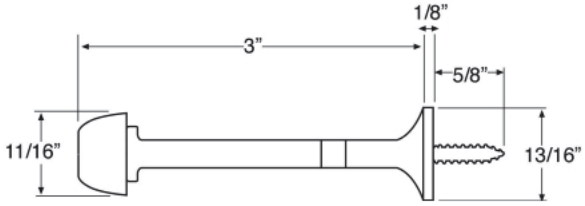

Stocked Product

ITEM	FINISH
4614	US3, 10B, 15, 26D
4671	US3, 10B, 15, 26D
4674	US3, 10B, 15, 26D
4675	US3, 10B, 15, 26D
4679	US3, 10B, 15, 26D

Taymor - *Sliding Door Locks*

Privacy Sliding Door Lock

PH580 - Privacy

Fits 1-3/8" to 1-3/4" thick door

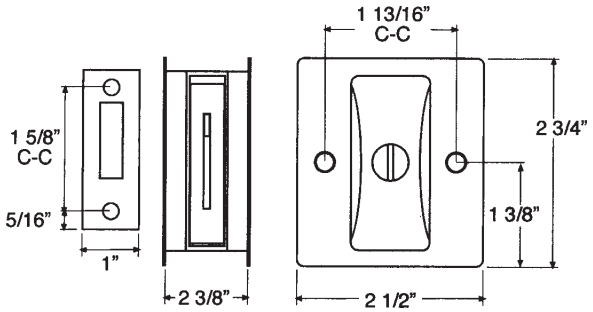

PH590 Passage Sliding Door Lock

Fits 1-3/8" to 1-3/4" thick door

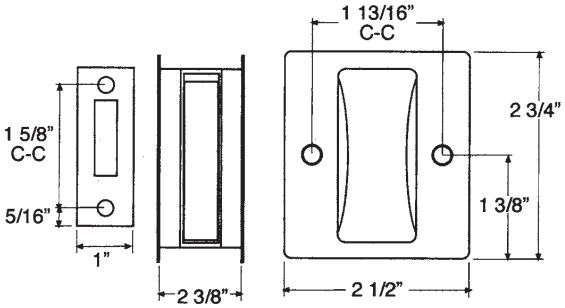

Stocked Product

ITEM	FINISH
PH580	US3*, 10B, 15, 26D
PH590	10B, 15, 26D

*** US3 Discontinued, call for availability**

Taymor - *General Hardware*

6390 - Deluxe Handrail Bracket

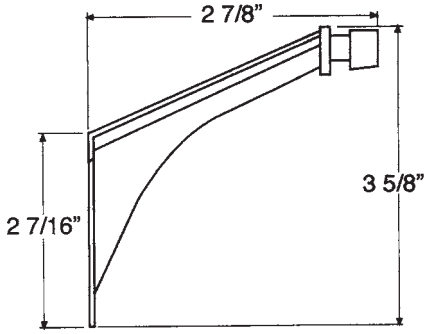

Stocked Product

ITEM	FINISH
6390	US3*, 10B, 15, 26D

*** US3 Discontinued, call for availability**

L2900 - Finger Pull Drive-in 2-1/8" Diameter, Snap-in Installation

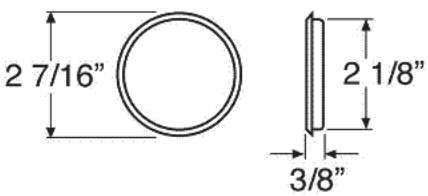

Stocked Product

ITEM	FINISH
L2900	US3, 10B, 15, 26D

TRIMCO - *Hardware Accessories*

PUSH PLATE

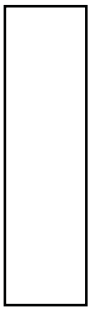

1001-3
Size: 4 x 16
BHMA: J301

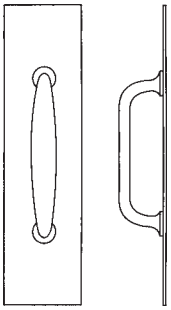

1010-3
Size: 4 x 16
BHMA: J405
CTC: 5”
ADA compliant

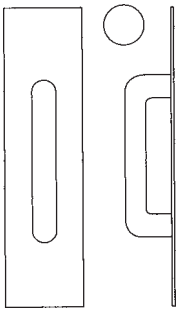

1017-3
Size: 4 x 16
BHMA: J405
Round 3/4”
CTC: 6”
ADA compliant

LOCK GUARD

1082-6 **LOCK GUARD**
- Install in minutes
- No drilling through bolts
- Protects cylindrical locks
- Size 6”

Stocked Product

1001-3	613,619
1010-3	613,619
1017-3	613,630
1082-6	630

1191-3 **OFFSET GRIP PULL**

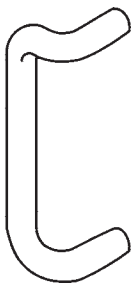

Size: 11”
Round: 1”
CTC: 10”
Clearance: 2-1/4”
BHMA: J402
ADA compliant

1194-3 **GRIP PULL**

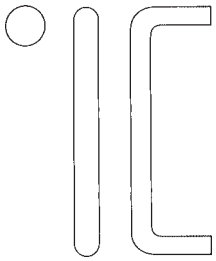

Size: 10-3/4”
Round: 3/4”
CTC: 10”
Clearance: 2”
BHMA: J401
ADA compliant

Stocked Product

1069/1069L	626
1191-3	630
1194-3	630
1111C	630

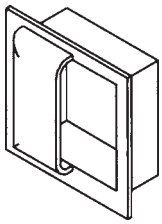

1111C **FLUSH PULL**
Size: 6” x 6”
Depth: 1-1/2”
BHMA: J403
Flush pull - Anti Vandal
Meets California access requirements
ADA compliant

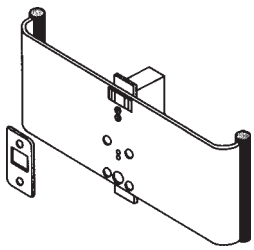

1069L **LATCHING (non-locking)**

1069 **PASSAGE (Push/Pull)**
Pocket door pull. Standard model for walls 6” thick.
1069 is passage only non-latching comes with black nylon handles.
ADA compliant

TRIMCO - *Hardware Accessories*

WALL BUMPERS – *1270*

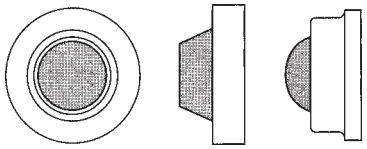

Material: Wrought
BHMA: L02251
Mounting: CP Combo pack fastening for wood, plaster or concrete
1270WVCP Concave
1270WXCP Convex

WALL BUMPER

1278CVCP **Concave**
1278CXCP **Convex**

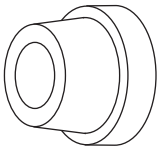

BHMA: L0201
Projection: 1”
Outside Diameter: 1 1/2”

DOME STOP – *1211*

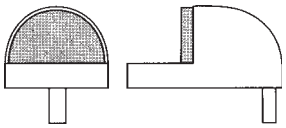

BHMA: L02141 / L02161
Base: 1.5”
Height: 1.43”
Rise: .22”

Stocked Product

1211	605,613,626
1270WVCP	605,613,626
1270WXCP	605,613,626
1278CVCP	613, 626
1278CXCP	626

HEAVY DUTY STOPS

1201 FLOOR STOP

Base: 2-1/4”
Height: 3”
BHMA: L02131

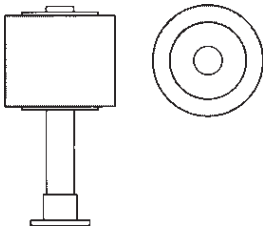

1209

Base: 1-1/4”
Height: 2”
Requires 1-1/2” cored hole. Installs with quick set cement

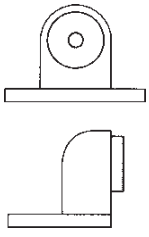

1214CK

Base: 1-3/4” x 2-1/2”
Height: 2-1/4”
Supplied with Torx screws. Requires 3” dia. cored hole in concrete.

Stocked Product

1201	626
1209	626
1214CK	626

TRIMCO - *Hardware Accessories*

DOOR HOLDER

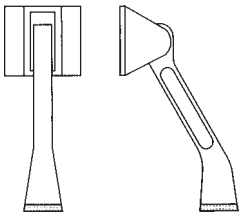

1220
BHMA: L01391
Base: 1-3/8" x 2"
Height: 5-23/32"
Cast material

DOOR STOP

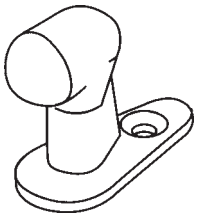

1231
BHMA: L02181
Base: 1-5/8" x 2-1/2"
Height: 2"
Cast material
Combo Fasteners

1233
Base: 1-3/8" x 2-3/4"
Height: 2-7/8"

DOOR STOP – *1298*

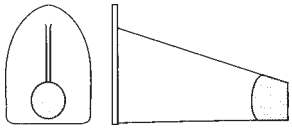

Base 2-1/4" x 2-5/8"
Projection 4-3/16"
Cast material

FLOOR – *1283-2S*

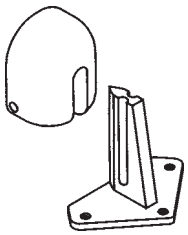

WALL – *1283-4S*

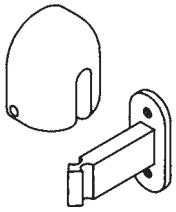

Size: 2-1/4" x 2-3/4" x 1-1/2"
Strike: 3"
"Adjustable" Holder body.
Self adjusting for door sag both vertical & horizontal

DOOR VIEWER

976U
BHMA: L03221
180° min.

Stocked Products

1220	605,613,626
1231	613,626
1233	613,626
1283-2S	626
1283-4S	626
1298	626
976U	626

TRIMCO - *Hardware Accessories*

DOOR COORDINATORS – *3092*

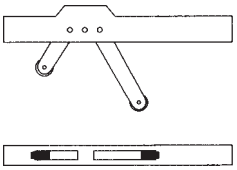

BHMA: 4.1.1 TYPE 25

STOP MOUNTED COORDINATOR WITH FILLER BAR – *3094 B2*

BHMA: 4.1.1 TYPE 21

FLUSH BOLTS & STOP – *3913*

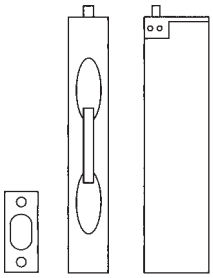

1" X 6-3/4" X 2-1/2"
For Wood Door

FLUSH BOLT – *3917-12*

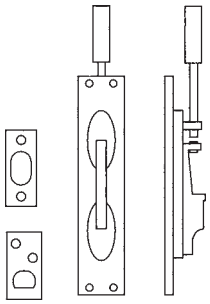

BHMA: L04081
1" X 6-3/4"
For UL Metal Door
12" Rod

Stocked Products

3092	
3094B2	
3913	626
3917-12	613, 626

HEAVY DUTY SURFACE BOLT *3922*

8 INCH

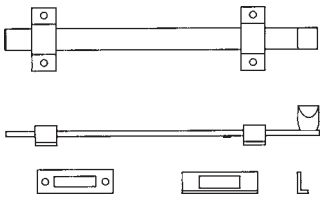

LATCH GUARD *PG8000*

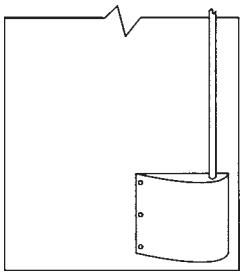

Size: 10" x 11-1/2"
Projection: 2"
Material .050

SURFACE BOLTS *4873 & 4876*

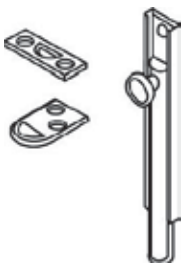

4873 - 3 INCH
BHMA: L04151
3" x 5/8" x 5/8"

4876 - 6 INCH
BHMA: L04151
3" x 5/8" x 1"

Stocked Products

3922	626
PG8000	630
4873	605
4876	605

Trine-*Electric Strikes & Accessories*

S005 - Electric Strike

APPLICATION

For use in replacement installations in wood jambs and iron gates. Use with bored cylindrical locksets having up to 3/4" throw.*

FEATURES

- FACE PLATE – 1-3/8" X 3-1/2"
- DURABILITY – 500,000 Life cycles
- HOLDING FORCE – 1000 lbs.
- NON-HANDED

VOLTAGE	CURRENT/AMPS
24 VAC	1.40
24 VDC	.19

DISCONTINUED
Call for availability and special pricing

Stocked Product
Brass US4
Satin Chrome US26D
24 VAC
24 VDC

Trine-*Electric Strikes & Accessories*

478X-375 - Face Plate

Introducing the Axion 478X-375 Face Plate Extended ramp (.375") accommodates snap-on additional frame face of Timely and similar door frames

478X-375 Faceplate
(3012, 3024 or 30LC Mechanism must be purchased seperately.)

3012, 3024 or 30LC
MECHANISM IS REQUIRED
TO COMPLETE THE STRIKE.

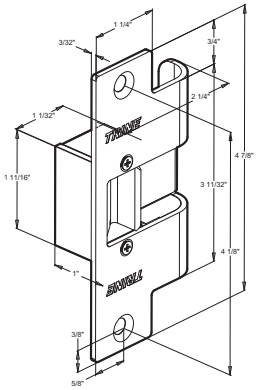

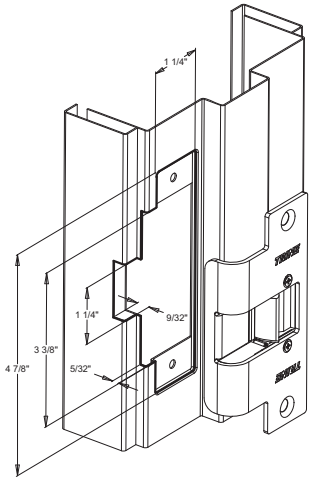

DISCONTINUED
Call for availability and special pricing

Stocked Product
10B, 32D

Trine-*Electric Strikes & Accessories*

3234 - Compact Electric Strike

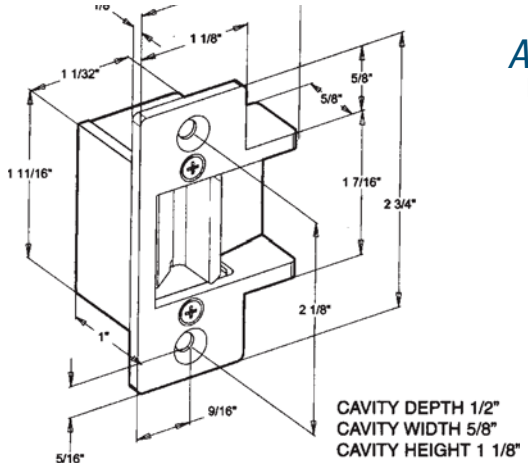

Application:

For use in new or replacement installation in metal frames. Use with cylindrical locksets having up to 5/8" throw, base on 1/8" door gap

Specifications:

- Face plate 2-3/4" x 1-1/4"
- Mortise Backset 1"
- Cavity depth 1/2"
- Cavity height 1-1/8"
- Cavity Width 5/8"
- ANSI 2-3/4' standard
- Designed for Timely applications
- 1" backset allows for installation without removal of most dust boxes
- Standard operating voltages 12VDC & 24VDC models intermittent only
- Holding Force 1200 lbs.
- Fail Secure
- All Stainless Steel Mechanism

Options

LC : "All in One Voltage" model with range of 12V thru 24V AC & DC, Intermittent or Continuous duty
W: For Wood Frame Application

DISCONTINUED
Call for availability and special pricing

Stocked Product:
Standard: 10B,26D
LC Option: US3, 10B, 26D
W Option: US3, 26D

Push Buttons

2-1/4" Body Diameter

SRP - Push Button Polished Brass with Black Center

5/8" Body Diameter

45A - Silver Rim with Pearl Center

Stocked Product:

SRP	Brass/Black
45A	Silver/Pearl

Trine-*Electric Strikes & Accessories*

400 - Electric Strike

For use in new or replacement installation in wood or metal jobs. Use with mortise exit devices, mortise locks without dead bolts and cylindrical locksets having up to 1" throw

Features

- Face plate 1-1/4" X 4-7/8"
- Fail Secure/Fail Safe field reversible on DC units
- All Stainless steel construction
- 1,000,000 life cycle
- Holding Force 2,000 lbs
- Field Adjustable left or right handing in minutes
- UL Listed
- 24VDC
- Handed

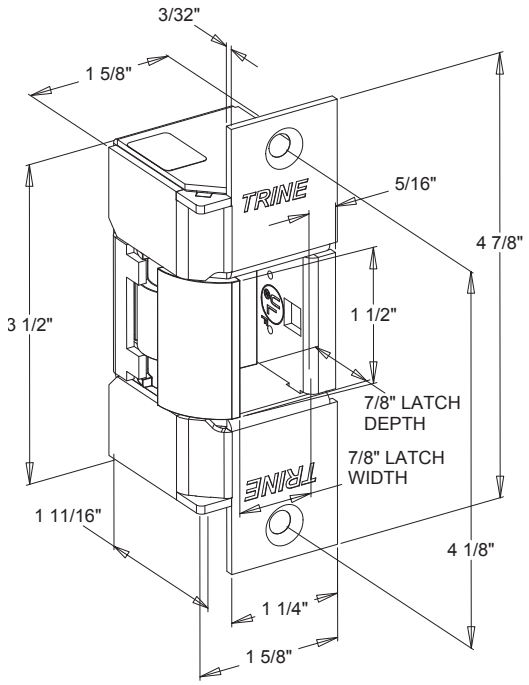

DISCONTINUED
Call for availability and special pricing

Stocked Product
400-24VDC 10B,32D

Trine-*Electric Strikes & Accessories*

430 - Electric Strike

For use in new or replacement installation in metal jambs. Designed to be used with mortise locks with up to 1" throw without the needing to of relocating center line

- offset application

Features

- Face Plate 1-1/4" X 4-7/8"
- All Stainless steel construction
- 1,000,000 life cycle
- Holding Force 2,000 lbs
- Cavity Centerline offset 1"
- Handed specify LH or RH
- Mortise type- backset 1-3/4"
- UL Listed
- 24VDC

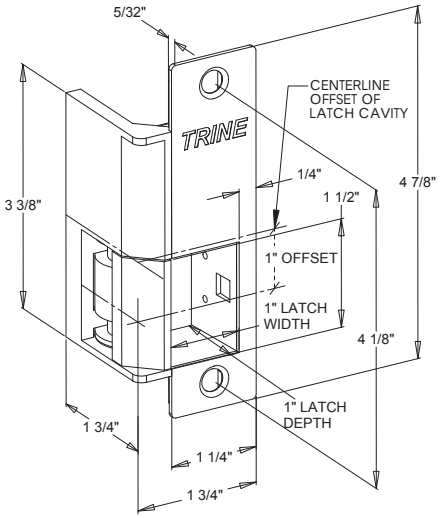

Compatible Locksets for 430

Accurate	8500 series
NT Monarch	18-M,XX-M 17-M
Sargent:	7700,8100 series
Schlage	L9000 series
Yale:	8700 series

DISCONTINUED
Call for availability and special pricing

Stocked Product
430-24VDC 10B, 32D

435 - Electric Strike

For use in new or replacement installation in metal jambs. Designed to be used with mortise locks with up to 1" throw without the need of relocating the center line

Features

- Face Plate 1-1/4" X 4-7/8"
- All Stainless steel construction
- 1,000,000 life cycle
- Holding Force 2,000 lbs
- Cavity Centerline offset 1"
- Handed specify LH or RH
- Mortise type- backset 1-3/4"
- UL Listed
- 24VDC

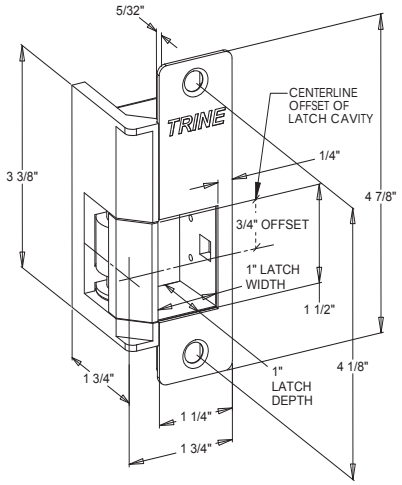

Compatible Locksets for 435

Accurate	9000,9100
Arrow	A series
Best	34H,37H
Corbin	ML2200
Falcon	M series
Marks	5036
PDQ	ML series
Sargent	7800-8200

DISCONTINUED
Call for availability and special pricing

Stocked Product
435-24VDC 10B,32D

Trine-*Electric Strikes & Accessories*

4800F - Electric Strike

For use with rim exit device; no cutting required, Frame cutting is eliminated-the strike is completely surface mounted.

Features

- Built-in electronics, with surge and kick back protection, allows 12-24AC DC operation with no external accessory
- Holding Force 3,000 lbs
- 1,500,000 life cycle
- Field adjustable for fail secure or fail safe operation
- 1-3/4" wide X 3/4" depth X 9" height
- Surface Mounting requires drilling three (3) holes
- Stainless Steel Construction
- Steel Spacer 1/8" thick supplied for installations that require mounting the strike closer to the exit device

LC Electrical Draw Chart for all LC option strikes

.57 Amp @ 12VDC
.25 Amp @ 24VDC
.51 Amp @ 12VAC
.21 Amp@ 24V AC

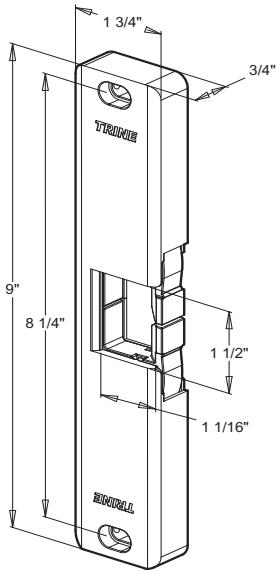

Stocked Product

4800F	32D

5201, 5204, 5208 & 5209 - Transformers

DISCONTINUED
Call for availability and special pricing

Stocked Product

ITEM	DESCRIPTION
5201	Plug-in Type 24V-20VA
5204	Plug-in Type 12V-20VA
5208	DC Plug-in Type 12VDC, 1.0 AMP
5209	DC Plug-in Type 24VDC, 0.5 AMP

Trine-*Electric Strikes & Accessories*

323478LC Kit

Kit Includes:

- (1) 234-26D -- 2 3/4" Faceplate
- (1) 234X-375-26D -- 2 3/4" Faceplate with extended ramp
- (1) 478-32D -- 4 7/8" Faceplate
- (1) 478-CCFP - Compeitor Cutout Filler Plate
- (1) 30LC - 11-29 AC&DC Mechanism

478-32D

Patented horizontal adjustment feature -- guaranteed not to move.

234-26D

For the smallest electric strike cutout.

30LC

234X-26D

Designed for Timely®/Redi® Frames. Great for Wood.

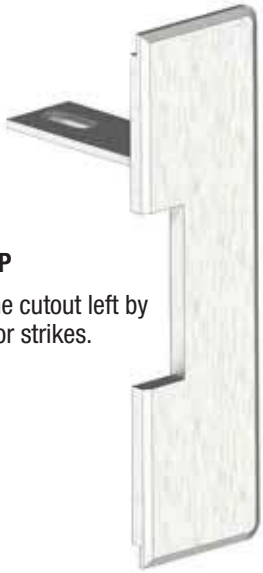

478-CCFP

Covers the cutout left by competitor strikes.

color shown may not exactly match the color of actual item

234X-375 *Optional (not included)

Smallest faceplate for Timely®Frames (or similar application) installation

Stocked Product

323478LC	26D
234x375 Optional Faceplate	10B

Trine-*Electric Strikes & Accessories*

EN400CMRP

The one box solution that can handle cylindrical, mortise, deadlatches, and rim panics

Features

- The EN400-12DC-32D complete in the box
- The 400RP latch - change for rim panics in the field.
- The EN400-Gatebox - Mount the strike anywhere.
- The EN-24DC-CA - change voltage in the field.
- Fail safe/fail secure field reversible.
- Always Low Current Draw

EN400-Gatebox
Install the EN400CMRP anywhere on the frame or post.
Gatebox is unfinished.

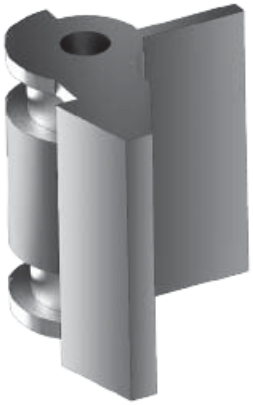

RP Latch

Stocked Product

EN400CMRP	32D

Von Duprin

22 - Rim Device

22 rim device for all types of single and double doors with mullion, UL listed for accident hazard installations. Covers stock hollow metal doors with 161 cutouts. Fits door stiles as narrow as 3-13/16" (97mm),.

Features

- Non-handed
- Latch bolt deadlocking
- Field sizeable
- Hex key dogging
- 3/4" (19mm) thrown latch bolt
- 299 strike included

Dimensions

Touchbar height to finished floor		39-13/16" (1011mm) at center)
Touchbar projection		
neutral		3-3/4" (95mm)
depressed		3" (76mm)
Center case		4-3/16" x 2-3/8" x 2-3/4" (106mm x 60mm x 70mm)
Device	length short 3' (914mm)	2'6" to 3' (762mm to 914mm) door size
	long 4'	3'1" to 4' (940mm to 1219mm) door size

22-F - Fire Exit Device

22-F fire exit rim device for all types of 4' x 8' (1219mm x 2438mm) single doors and 8' x 8' (2438mm x 2438mm) double doors with 9854 or 9954 mullion, UL listed for up to 3 hour fire labeled installations. Fits door stiles as narrow as 4-3/8" (111mm)

Features

- Non-handed
- Latch bolt deadlocking
- Field sizeable
- 3/4" (19mm) throw latch bolt
- 299 strike included

Stocked Product

22EO/22EOF 3' and 4'	Sprayed Aluminum and Dark Bronze

Von Duprin

2227 - Surface Mounted Vertical Rod Device

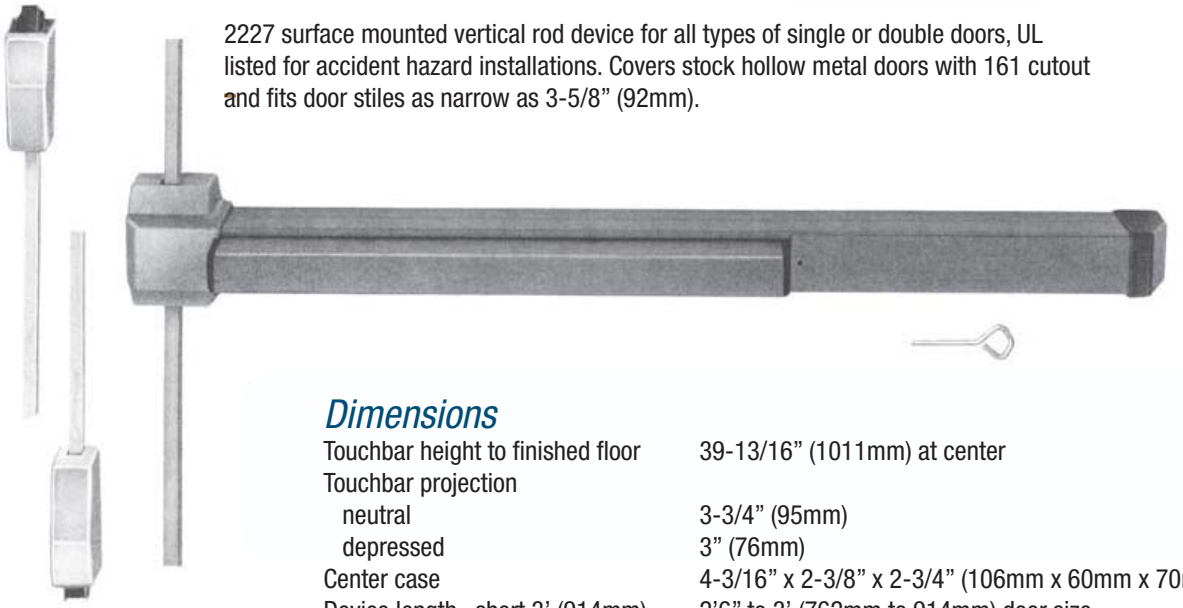

2227 surface mounted vertical rod device for all types of single or double doors, UL listed for accident hazard installations. Covers stock hollow metal doors with 161 cutout and fits door stiles as narrow as 3-5/8" (92mm).

Dimensions

Touchbar height to finished floor		39-13/16" (1011mm) at center
Touchbar projection		
neutral		3-3/4" (95mm)
depressed		3" (76mm)
Center case		4-3/16" x 2-3/8" x 2-3/4" (106mm x 60mm x 70mm)
Device length	short 3' (914mm)	2'6" to 3' (762mm to 914mm) door size
	long 4'	3'1" to 4' (940mm to 1219mm) door size
Top & bottom latch case		4-1/2" x 2-1/8" x 1-1/2" 114mm x 54mm x 38mm
Vertical rods		1/2" (13mm) square tubing

Features

- Non-handed
- Latch bolt deadlocking
- Field sizeable
- Hex key dogging
- 5/8" (16mm) thrown latch bolt

2227-F - Surface Mounted Vertical Rod Device

2227-F surface mounted vertical rod device for all types of 8' x 8' (2438mm x 2438mm) double doors, UL listed for use on up to 3 hour fire labeled installations. Fits door stiles as narrow as 3-5/8" (92mm)

Features

- Non-handed
- Latch bolt deadlocking
- Field sizeable
- 5/8" (16mm) throw latch bolt

Stocked Product

2227EO 3' X 7' and 4' X 7'	Sprayed Aluminum and Dark Bronze
2227EOF 3' X 7'	Sprayed Aluminum and Dark Bronze

Von Duprin

22 SERIES - Trim (All trim less cylinder)

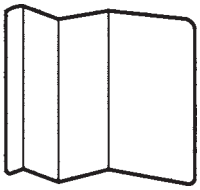

210DT
10 gauge stainless steel escutcheon dummy pull

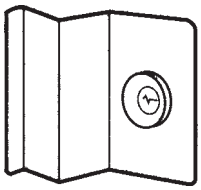

210NL
10 gauge stainless steel escutcheon pull trim
(Rim cylinder not included)

230DT
Stamped 10 gauge steel dummy pull handle

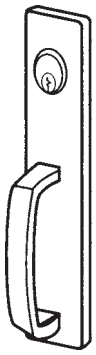

230NL
10 gauge stainless steel escutcheon. NL function specify
(Rim cylinder not included)

230TP
Heavy 10 gauge steel thumb piece trim
(1-1/4" Mortise cylinder not included)

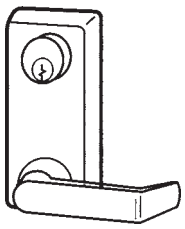

230L
Lever trim has a cast aluminum3/4" depth escutcheon 06 trim standard (pictured) standard operator key locks unlocks lever
(1-1/4" Mortise cylinder not included)

230L

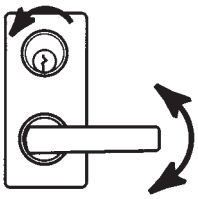

Standard Operation, key locks and unlocks lever.
(1-1/4" Mortise cylinder not included)

230L-BE

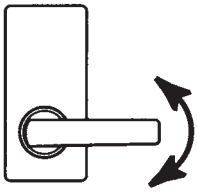

Blank escutcheon, lever always active. Use BE suffix, e.g., 230L-BE.

Stocked Product

210DT	Sprayed Aluminum and Dark Bronze
210NL	
230DT	
230L-BE	
230L	
230NL	
230TP	

STRIKE FOR 22 SERIES

299

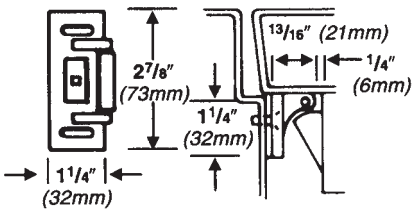

Projection 13/16" (21mm)

1609

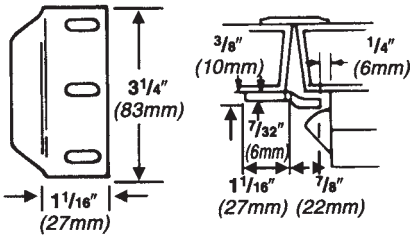

For rim / vertical rod combination - not fire rated

Stocked Product

1609	Black, 26D
299	Black, 26D

Von Duprin

22 ALK - Exit Alarm Kit (supplied less cylinder)

The 22ALK battery alarm kit is a simple yet effective way to monitor the use of an exit device. While still a means of egress, the unit contains an internal horn. When the touchbar is depressed, the horn sounds to provide an audible means of signaling that the opening has been violated. The key switch uses a standard 1-1/4" (32mm) mortise cylinder. The unit operates on one standard 9-volt transistor battery. When the battery is weak the horn will emit an intermittent signal. Alarm kits are available with a choice of two switch kits, S1 or S2. S1 monitors the touch pad and is furnished standard. S2 optional latchbolt monitoring is recommended for use with surface vertical rod exit devices. Specify ALK-S2 special order.

Minimum Door Sizes

Device	3' (914mm) Length	4' (1219mm) Length
22 / 22-F	29" (832mm)	3'3" (989mm)
2227 / 2227-F	2'8" (813mm)	3'2" (965mm)

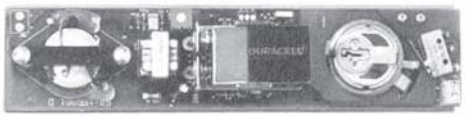

Stocked Product
Sprayed Aluminum and Dark Bronze

22 Series - Parts

900894

222
7/32" HEX KEY - OLD STYLE

227
5/32" HEX KEY - NEW STYLE

971974 locking nut

Stocked Product

900894	Tail Piece and Guide
971974	Locking Nut
222	7/32" Hex Key
227	5/32" Hex Key
22EXT	12" Extension Rod Aluminum and Dark Bronze
22EXT36	36" Extension Rod in Aluminum or Dark Bronze

F/2227 extension rods

Von Duprin

2670 GUARD - Exit Alarm (supplied less cylinder)

Dimensions

Exit Alarm Lock

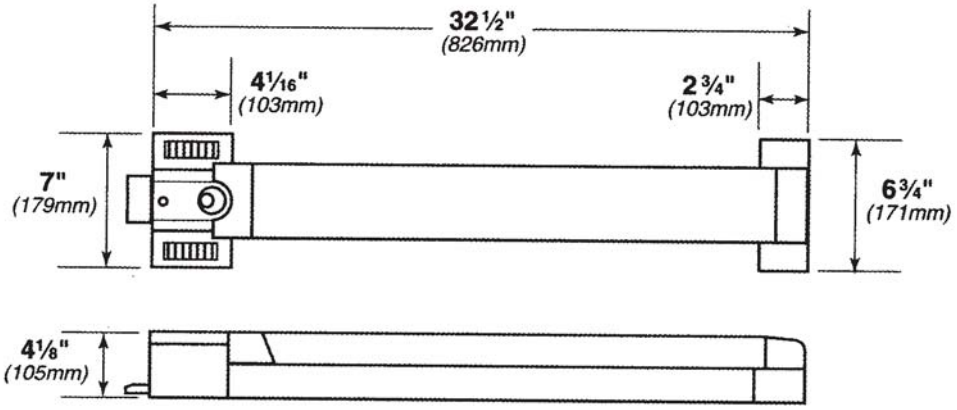

Strike

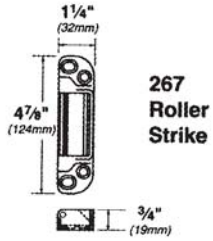

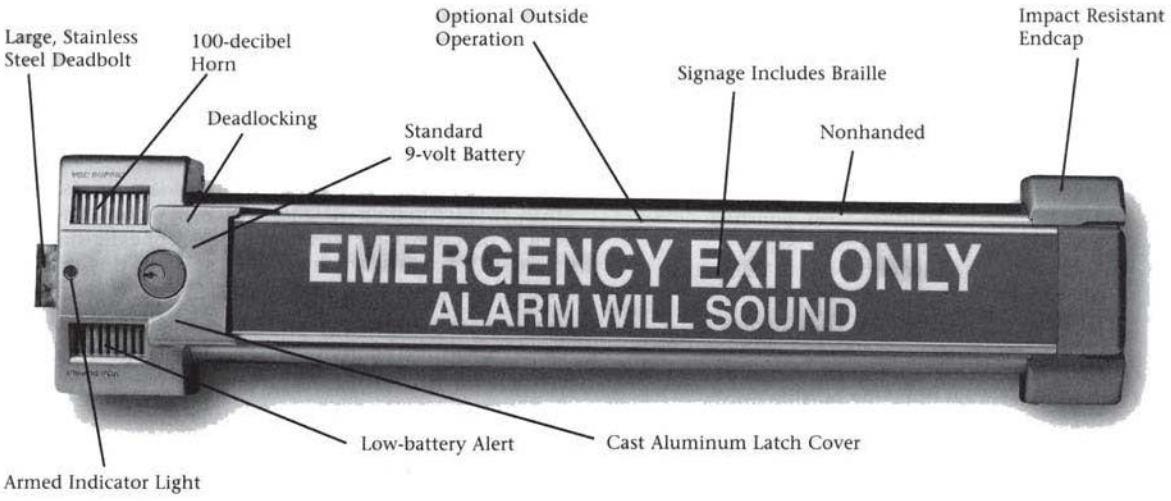

Features

- Complies with NFPA101 life safety
- UL Listed for panic exit hardware ANSI A156.3 Grade 1
- Armed and unarmed by using standard rim cylinder (not supplied)
- Non handed
- Recommended exterior trim 210DT or 230DT

Stocked Product
US28 Aluminum

Von Duprin

33A - Rim Exit Device

33A rim devices for all types of single and double doors with mullion, UL listed for Panic Exit Hardware.
Fits door stiles as narrow as 1 3l4" (44mm).

1439 Roller

Features

- Non-handed
- Field sizeable
- 3/4" (19mm) molydag© coated latch bolt
- Hex key dogging
- Latch bolt deadlocking
- One piece center case cover

Strikes and Fasteners

Device is furnished standard with 1439 roller strike in dull black finish. Sex bolts are furnished for standard mounting on 1 $^{3}/_{4}$" (*44mm*) and 2 $^{1}/_{4}$ (*57mm*) thick doors.

Dimensions

Pushpad height to finished floor	39 $^{13}/_{16}$" (*1011 mm*) at center
Pushpad projection —	
neutral	3 $^{13}/_{16}$" (*97 mm*)
depressed	3 $^{1}/_{16}$" (*78 mm*)
Center case	8 $^{3}/_{16}$" x 2 $^{13}/_{32}$" x 1 $^{9}/_{16}$" (*208mm x 62mm x 40mm*)
Device length —	
Short 3' (*914mm*)	2'6" to 3' (*762mm to 914mm*) door size
Long 4' (*1219mm*)	3'1" to 4' (*940mm to 1219mm*) door size

Stocked Product

33AEO	3'	628, 313

Von Duprin

3327A - Surface Mounted Vertical Rod Device

3327A surface mounted vertival rod devices for all types of single and double doors.
UL listed for Panic Exit Hardware. Fits door stiles as narrow as $1^{3}/_{4}$" (44mm).

266
Top Strike

248L-4
Bottom Strike for use with Threshold

304L
Bottom Strike

Features

- Non-handed
- Field sizeable
- $^{5}/_{8}$" (*19mm*) molydag© coated latch bolt
- Hex key dogging
- Latch bolt deadlocking
- One piece center case cover

Strikes and Fasteners

Device is furnished standard with 266, 248L-4 and 304L strikes. Sex bolts are furnished for standard mounting on $1^{3}/_{4}$" (*44mm*) and $2^{1}/_{4}$ (*57mm*) thick doors.

Dimensions

Pushpad height to finished floor	39 $^{13}/_{16}$" (*1011 mm*) at center
Pushpad projection —	
neutral	$3^{13}/_{16}$" (*97 mm*)
depressed	$3^{1}/_{16}$" (*78 mm*)
Center case	$8^{3}/_{16}$" x $2^{13}/_{32}$" x $1^{9}/_{16}$" (*208mm x 62mm x 40mm*)
Device length —	
Short 3' (*914mm*)	2'6" to 3' (*762mm to 914mm*) door size
Long 4' (*1219mm*)	3'1" to 4' (*940mm to 1219mm*) door size
Top and bottom latch case	$4^{1}/_{2}$" x $2^{1}/_{8}$" x $1^{1}/_{26}$" (*117mm x 48mm x 38mm*)
Vertical Rods	$^{1}/_{2}$" (*13 mm*) square tubing
Undercut	$^{1}/_{4}$" (*7 mm*) maximum

Stocked Product

3327AEO	3'x7'	628, 313

Von Duprin

3347A - Concealed Vertical Rod Device

3347A concealed vertical devices for all types of single and double doors with mullion, UL listed for Panic Exit Hardware. Fits door stiles as narrow as $1^{3}/_{4}$" (44mm) (wood door stile as narrow as 4").

Features

- Non-handed
- Field sizeable
- $^{5}/_{8}$" (*19mm*) molydag© coated latch bolt
- Hex key dogging
- Latch bolt deadlocking
- One piece center case cover

Strikes and Fasteners

Device is furnished standard with 338 and 385A strikes. Sex bolts are furnished for standard mounting on $1^{3}/_{4}$" (*44mm*) and $2^{1}/_{4}$ (*57mm*) thick doors.

Dimensions

Pushpad height to finished floor	$39^{13}/_{16}$" (*1011 mm*) at center
Pushpad projection —	
neutral	$3^{13}/_{16}$" (*97 mm*)
depressed	$3^{1}/_{16}$" (*78 mm*)
Center case	$8^{3}/_{16}$" x $2^{13}/_{32}$" x $1^{9}/_{16}$" (*208mm x 62mm x 40mm*)
Device length —	
Short 3' (*914mm*)	2'6" to 3' (*762mm to 914mm*) door size
Long 4' (*1219mm*)	3'1" to 4' (*940mm to 1219mm*) door size
Vertical Rods	Two piece adjustable rods, doors 6'8" (*2027mm*) to 8'4" (*2533mm*)
Undercut	$^{1}/_{4}$" (*7 mm*) maximum

Stocked Product

3347AEO 3'x7' 628, 313

Von Duprin

33A Series - Trim (All trim supplied less cylinder)

386DT
Dummy Trim

386NL
Pull trim with cylinder Key retracts bolt (Rim cylinder not included)

388
Pull trim with thumb piece Key locks or unlocks latch (Rim cylinder not included)

360L
Standard operation key locks or unlocks lever (Mortise cylinder 1-1/4" not included)

360LBE
With 06 lever Key locks & unlocks lever (Rim cylinder not included)

Stocked Product

Part #	Cylinder Required	Function	Finishes
386DT	no cylinder required	Dummy	26D,10B
386NL	Rim Cylinder	NL Function Rim	26D,10B
360L	Mortise Cylinder 1-1/4"	Entry Mortise	26D,10B
388	Rim cylinder	NL Function Rim	26D,10B
360L BE	none	Entry Blank Outside	313,26D

All lever trim stocked with 06 Lever

DOORS & SPECIALTIES CO.
COMMERCIAL DOORS • FRAMES • HARDWARE

Von Duprin

CX99 Device

CX99 rim devices for all types of single doors and double doors with mullion, UL listed for accident hazard installations. Covers stock hollow metal doors with 86 or 161 cutouts.

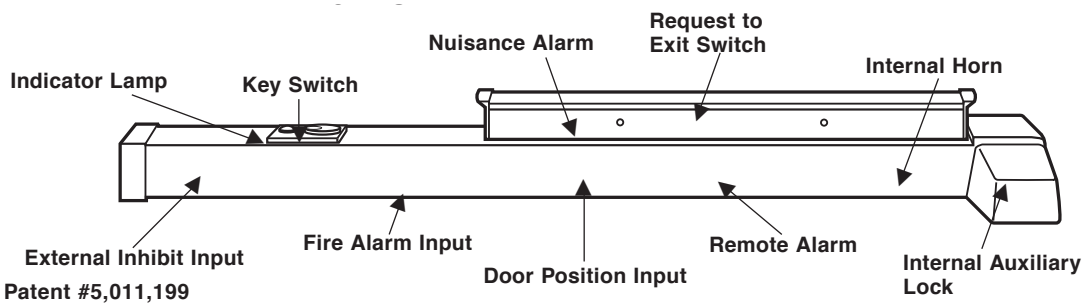

Patent #5,011,199

Features

- Nonhanded
- Field sizeable
- 3/4" (19mm) throw, latch bolt
- Latch bolt deadlocking

Stocked Product
Finishes: 313, 26D
Sizes: 3' and 4"

299

Strikes And Fasteners

Device is furnished with standard 299 strike in dull black finish

Dimensions

Touchbar height to finised floor	39-13/16" (1011mm) at center
Touchbar projection	
neutral	3-13/16" (97mm)
depressed	3-1/16" (78mm)
Center case	8" x 2-1/4" x 2-3/4" (203mm x 57mm x 70mm)
Device lenght	
Short	3' (914mm) 2'10" to 3' (864mm to 914mm) door size
Long	4' (1219mm) 3'4" to 4' (1016mm to 1219mm) door size

Factory Definable Delay Time
Most jurisdictions allow 15 seconds of delay before allowing egress. In those cases where 15 seconds is not appropriate, Von Duprin can set the Chexit for any delay time between 0 and 60 seconds on 2 second increments. For delays greater than 15 seconds a letter from the local authority is required.

Request to Exit Switch is built into the device to detect when someone attempts to exit. Applying less than 15 pounds to the push pad when the device is armed will cause this switch to start an irreversible alarm cycle.

Nuisance Alarm — When a Chexit is located in a public area, it can be desirable to limit false alarms. If the Nuisance Audible and Nuisance Delay options are set to off, the device will go into alarm as soon as the push pad is touched (when armed). Turning the Nuisance Delay on will require the push pad to be pressed for 2 seconds before the Chexit goes into alarm. If the Nuisance Audible and Nuisance Delay are both on, the alarm will sound as soon as the push pad is pressed, but the alarm sequence will stop unless the push pad is held for 2 seconds or more.

Remote Alarm — A set of relay contacts (rated 1 ampere, 24 VDC) are provided to give external alarm indication. These contacts close when the device is in an irreversible alarm condition (If Nuisance Audible is enabled, they will not close until the push pad has been held for more than 2 seconds). These contacts can be used to drive a horn, lamp, or other indicative device.

Key Switch — The Key Switch provides the means to arm, disarm, or reset the Chexit. The key can be removed in either the Arm or Disarm position. In cases where the key switch is not used for controlling the device, a blank cylinder can be used.

Indicator Lamp — The status of the Chexit can be determined by the Indicator Lamp. A masked bezel design provides wide angle viewing in any lighting condition. When the lamp is off, this indicates the device is disarmed and is functioning as a normal exit device (no delay). A continuously on lamp indicates the device has just been armed and as soon as the selectable rearm timer expires, the device will arm. A slow flashing lamp indicates the device is armed. A fast flashing indicator lamp indicates the device is in alarm.

Internal Horn — Whenever the device is in alarm or the push pad is pressed the internal horn will sound. The volume level of this horn exceeds 85 db at 6 feet. The user can select whether or not this horn sounds during a fire alarm condition.

Door Position Input — An external door position switch can be connected to the Chexit. Doing this gives added security to the opening and is recommended. If a door position switch is used, it will cause the alarm to sound if the door is not closed when the device is armed; it will sound the alarm if the door is forced open while the device is armed; it will provide anti-pass-back by cutting short the rearm time.

External Inhibit Input — This optional input is provided to allow remote override of the Chexit in the armed condition. It also allows remote reset of the Chexit in an alarmed condition. Typical device connections include card readers, wall-mounted key switches, or a remote security console. This input is controlled with a Normally closed switch (open = disarmed).

Fire Alarm Input — This input disables the Chexit immediately upon a fire alarm. The building's fire alarm system should provide normally closed contacts which open on alarm.

Internal Auxiliary Lock — The Auxiliary Lock is engaged when the Chexit is armed. The locking mechanism is specifically designed to hold securely even when the exit device is struck with forceful blows. The mechanism will also release upon command irregardless of the force applied to the push pad. An override spring prevents damage to internal components when more than 75 pounds of force are exerted on the push pad.

Von Duprin

AX Series -
The Exit Device That Requires Only 5 Lbs. of Force to Operate.

AX99 - Rim Exit Device

AX99 rim exit devices for all types of single doors and double doors with mullion, UL listed for accident hazard installations. Covers stock hollow metal doors with 86 or 161 cutouts.

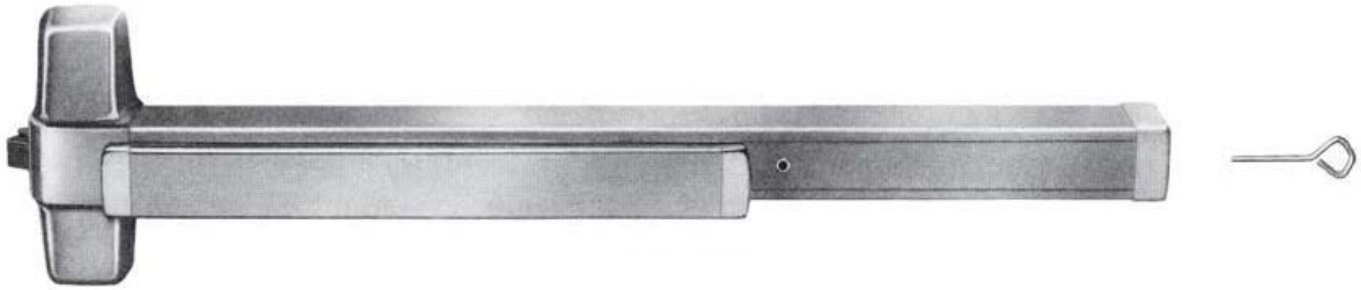

Features

- Non-handed
- Latch bolt deadlocking
- Field sizeable
- Hex key dogging
- 3/4" (19mm) thrown latch bolt

Stocked Product

AX99EO	3' and 4'	26D, 313

Dimensions

Touchbar height to finished floor		39-13/16" (935mm) at center)
Touchbar projection		
neutral		3-13-16" (97mm)
depressed		3-1/16" (78mm)
Center case		8" x 2-1/4" x 2-3/4" (203mm x 57mm x 70mm)
Device length	short 3'	2'6" to 3' (762mm to 914mm) door size
	long 4'	3'1" to 4' (940mm to 1219mm) door size

Von Duprin

AX Series -
The Exit Device That Requires Only 5 Lbs. of Force to Operate.

AX9927 - Surface Mounted Vertical Rod

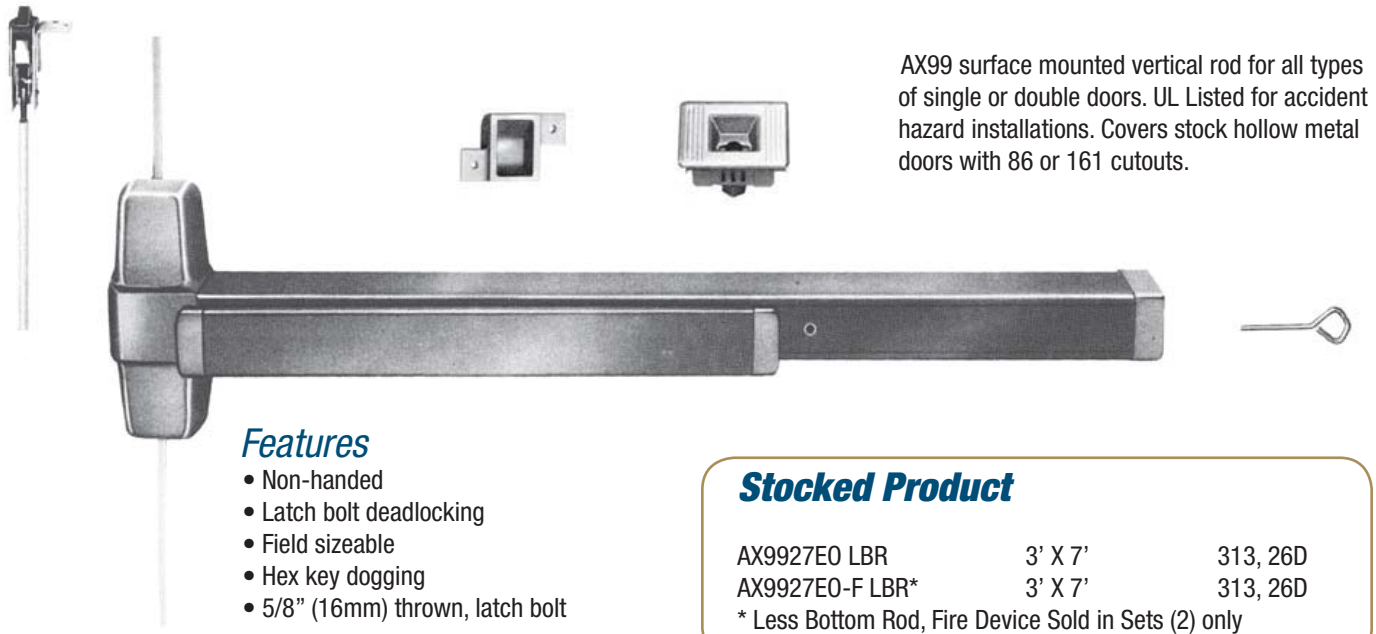

AX99 surface mounted vertical rod for all types of single or double doors. UL Listed for accident hazard installations. Covers stock hollow metal doors with 86 or 161 cutouts.

Features
- Non-handed
- Latch bolt deadlocking
- Field sizeable
- Hex key dogging
- 5/8" (16mm) thrown, latch bolt

Stocked Product

AX9927EO LBR	3' X 7'	313, 26D
AX9927EO-F LBR*	3' X 7'	313, 26D

* Less Bottom Rod, Fire Device Sold in Sets (2) only

AX9927-F - Fire Exit Surface Mounted Vertical Rod

AX9927-F fire exit surface mounted vertical rod devices for all types of 8' x 8' (2438mm x 2438mm) double doors, UL listed fire exit hardware, 3 hours.

Features
- Non-handed
- Field sizeable
- Latch bolt deadlocking
- 5/8" (16mm) anti-friction latch bolt

Dimensions

Touchbar height to finished floor	39-5/8" (1006mm) at center
Touchbar projection	
neutral	3-13/16" (97mm)
depressed	3-1/16" (76mm)
Center case	8" x 2-1/4" x 2-3/4" (203mm x 57mm x 70mm)
Device length short 3'	(914mm) 2'6" to 3' (762mm to 914mm) door size
Top & bottom latch case	4-1/2" x 2-1/8" x 1-1/2" (114mm x 54mm x 38mm)
Vertical rods	1/2" (13mm) square tubing

Von Duprin

98 - Rim Exit Device Smooth Mechanism Case
99 - Rim Exit Device

99 rim exit devices for all types of single doors and double doors with mullion, UL listed for accident hazard installations. Covers stock hollow metal doors with 86 or 161 cutouts.

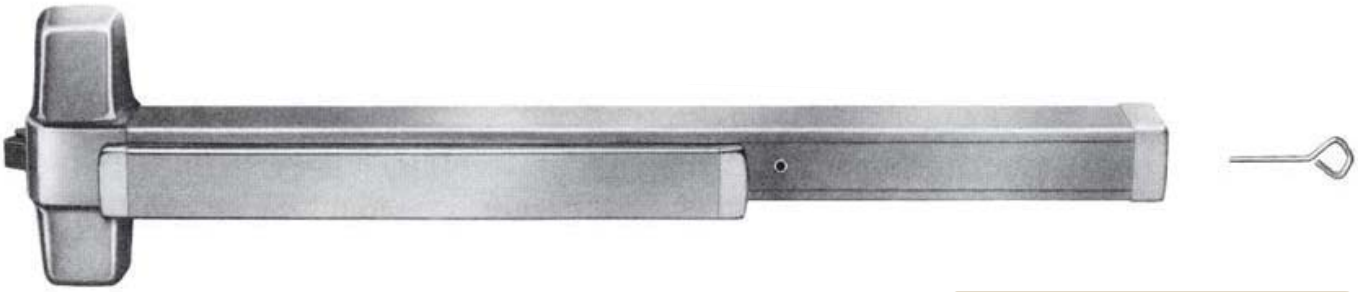

Features
- Non-handed
- Latch bolt deadlocking
- Field sizeable
- Hex key dogging
- 3/4" (19mm) thrown latch bolt

Option:
- 98/99 NLOP Night Latch Cylinder Assembly

Stocked Product

98EO/99EO	3' and 4'	26D
99EO	3' and 4'	313
99EO	3'	US3, US26

99-F - Fire Exit Rim Exit Device

98-F and 99-F fire exit rim devices for all types of 4' x 8' (1219mm x 2438mm) single door or 8' x 8' (2438mm x 2438mm) double doors with 9954 9854 mullion, UL listed for fire exit hardware, 3 hour rating.

Features
- Non-handed
- Field sizeable
- Latch bolt deadlocking
- 3/4" (19mm) thrown latch bolt

Stocked Product

98EOF/99EOF	3' and 4'	26D
99EOF	3'	313

Dimensions

Touchbar height to finished floor		39-13/16" (935mm) at center)
Touchbar projection		
neutral		3-13-16" (97mm)
depressed		3-1/16" (78mm)
Center case		8" x 2-1/4" x 2-3/4" (203mm x 57mm x 70mm)
Device length	short 3'	2'6" to 3' (762mm to 914mm) door size
	long 4'	3'1" to 4' (940mm to 1219mm) door size

Von Duprin

9827 - Surface Mounted Vertical Rod with Smooth Mechanism Case
9927 - Surface Mounted Vertical Rod

99 surface mounted vertical rod for all types of single or double doors. UL Listed for accident hazard installations. Covers stock hollow metal doors with 86 or 161 cutouts.

Features
- Non-handed
- Latch bolt deadlocking
- Field sizeable
- Hex key dogging
- 5/8" (16mm) thrown, latch bolt
- Available LBR (less bottom rod)

Option
Available LBR (less bottom rod)

Stocked Product

9827EO/9927EO	3' X 7' and 4' X 7'	313, 26D
9927EO LBR/9827EO LBR	3' X 7'	26D
9827EOF/9927EOF	3' X 7' and 4' X 7'	313, 26D
* P9827EOF LBR	3' X 7'	26D
* P9927EOF LBR	3' X 7'	26D

* Less Bottom Rod, Fire Device Sold in Sets (2) only

9927-F - Fire Exit Surface Mounted Vertical Rod

9827-F and 9927-F fire exit surface mounted vertical rod devices for all types of 8' x 8' (2438mm x 2438mm) double doors, UL listed fire exit hardware, 3 hours.

Features
- Non-handed
- Field sizeable
- Latch bolt deadlocking
- 5/8" (16mm) anti-friction latch bolt

Dimensions

Touchbar height to finished floor	39-5/8" (1006mm) at center
Touchbar projection	
neutral	3-13/16" (97mm)
depressed	3-1/16" (76mm)
Center case	8" x 2-1/4" x 2-3/4" (203mm x 57mm x 70mm)
Device length short 3'	(914mm) 2'6" to 3' (762mm to 914mm) door size
long 4'	3'1" to 4' (940mm to 1219mm) door size
Top & bottom latch case	4-1/2" x 2-1/8" x 1-1/2" (114mm x 54mm x 38mm)
Vertical rods	1/2" (13mm) square tubing

Von Duprin

9947 - Concealed Vertical Rod Devices

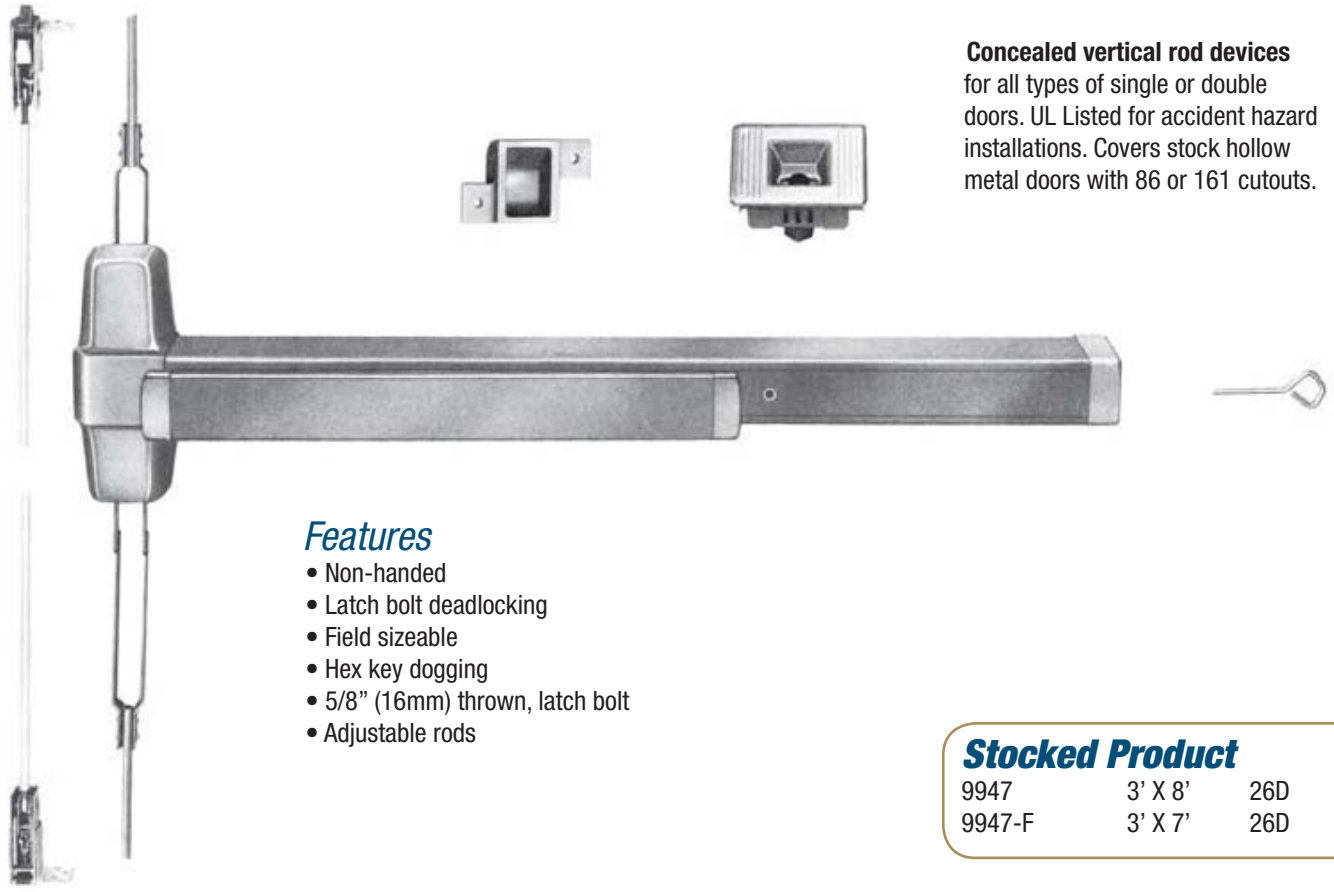

Concealed vertical rod devices for all types of single or double doors. UL Listed for accident hazard installations. Covers stock hollow metal doors with 86 or 161 cutouts.

Features

- Non-handed
- Latch bolt deadlocking
- Field sizeable
- Hex key dogging
- 5/8" (16mm) thrown, latch bolt
- Adjustable rods

Stocked Product

9947	3' X 8'	26D
9947-F	3' X 7'	26D

9947-F - Fire Exit Concealed Vertical Rod Devices

9947-F fire exit concealed vertical rod devices for use on 8' x 8' (2438mm x 2438mm) double metal doors, UL listed fire exit hardware, 3 hours.

Features

- Non-handed
- Field sizeable
- Adjustable rods
- 5/8" (16mm) thrown, latch bolt

Dimensions

Touchbar height to finished floor	39-5/8" (1006mm) at center
Touchbar projection	
neutral	3-13/16" (97mm)
depressed	3-1/16" (76mm)
Center case	8" x 2-1/4" x 2-3/4" (203mm x 57mm x 70mm)
Device length short 3'	(914mm) 2'6" to 3' (762mm to 914mm) door size
long 4'	3'1" to 4' (940mm to 1219mm) door size
Top & bottom latch case	4-1/2" x 2-1/8" x 1-1/2" (114mm x 54mm x 38mm)
Vertical rods	Two piece adjustable rods, doors 6'8" (2027mm) to 8'4" (2533mm)

Von Duprin

9947WDC - Wood Concealed Vertical Rod Devices

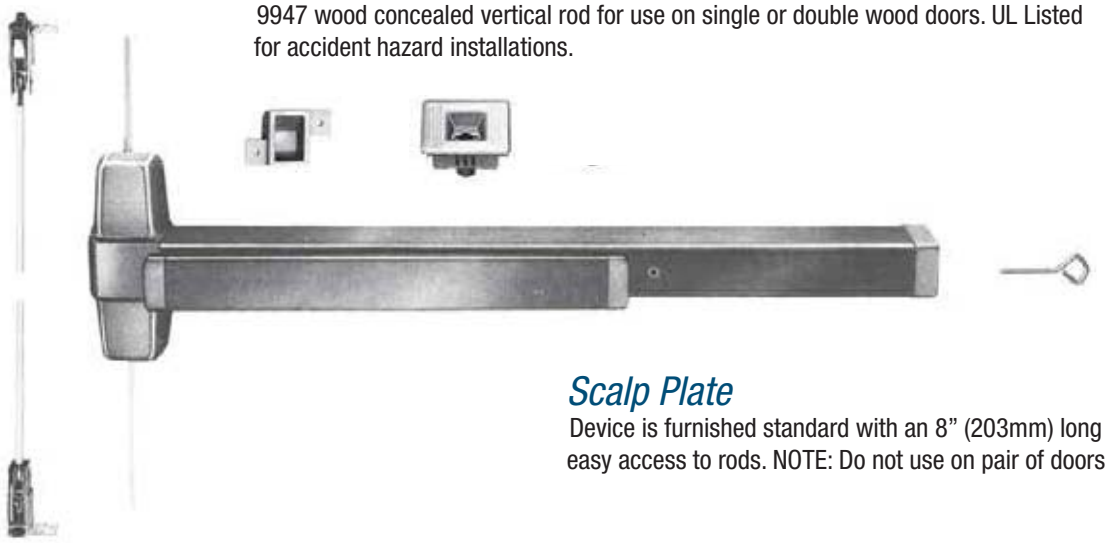

9947 wood concealed vertical rod for use on single or double wood doors. UL Listed for accident hazard installations.

Scalp Plate

Device is furnished standard with an 8" (203mm) long scalp plate for easy access to rods. NOTE: Do not use on pair of doors with 9975

Features

- Non-handed
- Latch bolt deadlocking
- Field sizeable
- Hex key dogging
- 5/8" (16mm) thrown, latch bolt
- Adjustable rods

Dimensions

Touchbar height to finished floor		39-13/16" (1011mm) at center, adjusts as low as 35-5/8" (905mm)
Touchbar projection		
neutral		3-13/16" (97mm)
depressed		3-1/16" (76mm)
Center case		8" x 2-1/4" x 2-3/4" (203mm x 57mm x 70mm)
Device length	short 3'	(914mm) 2'6" to 3' (762mm to 914mm) door size
	long 4'	3'1" to 4' (940mm to 1219mm) door size
Vertical Rods - round		Two piece adjustable rods, doors 6'8" (2027mm) to 8'4" (2533mm)

Stocked Product

9947WDC	3' X 7'	26D

Von Duprin

9949 - Concealed Vertical Cable Device

Features

- Non-handed
- Latch bolt deadlocking
- Field sizeable
- Hex key dogging
- 1/2" (13mm) thrown, latch bolt
- Use with 99 trims

Dimensions

Touchbar height to finished floor		39-5/8" (1006mm) at center,
Touchbar projection		
neutral		3-13/16" (97mm)
depressed		3-1/16" (76mm)
Center case		8" x 2-3/4" x 2-3/8" (203mm x 70mm x 60mm)
Device length	short 3'	2'4" to 3' (711mm to 914 mm) door size
	long 4'	2'10" to 4' (864 mm to 1219 mm) door size

NOTE: Fire rated openings less bottom latch. Requires Fire Pin Latch

Stocked Product

NUMBER	DESCRIPTION	FINISH
CS49-80	CABLE SYSTEM 8"0"	
CS49-70	CABLE SYSTEM 7'0"	
CS49-68	CABLE SYSTEM 6'8"	
9949EOLSF313	9949EO F LESS CABLE	313
9949EOLS313	9949EO LESS CABLE	313
9949EOLSF26DL	9949EO F LESS CABLE 48"	26D
9949EOLS26DL	9949EO LESS CABLE 48"	26D
9949EOLSF26D	9949EO F LESS CABLE	26D
9949EOLS26D	9949EO LESS CABLE	26D
CS49LBL-80	CABLE SYSTEM LBL 8"0"	
CS49LBL-70	CABLE SYSTEM LBL 7'0"	
CS49LBL-68	CABLE SYSTEM LBL 6'8"	
49FPK	FIRE PIN KIT	

Von Duprin

9975 - Mortise Lock
9975 F - Mortise Device, Fire Rated UL Listed for Fire Exit Hardware

9975 mortise lock device for all types of single or double doors. UL Listed for accident hazard installations. Covers stock hollow metal doors with 86 cutout and door stiles as narrow as 4-3/4”

Features

- Nonhanded
- Latch bolt deadlocking
- Field sizeable
- Hex key dogging 9975 only
- 3/4” (19mm) thrown, latch bolt
- Adjustable rods

Dimensions

Touchbar height to finished floor		39-5/8” (1006mm) at center
Latch bolt height to finished floor		40-3/32” (1018mm) at center
Touchbar projection		
neutral		3-13/16” (97mm)
depressed		3-1/16” (76mm)
Center case		8” x 2-1/4” x 2-3/4” (203mm x 57mm x 70mm)
Device length	short 3’	(914mm) 2’6” to 3’ (762mm to 914mm) door size
	long 4’	3’1” to 4’ (940mm to 1219mm) door size
Lock case		4-5/8” x 5-3/4” x 1” (117mm x 146mm x 25mm)
Faceplate		1-1/4” x 8” x 7/32” (32mm x 2438mm x 6mm)
Cylinder backset		2-3/4” (70mm)

Stocked Product

9975EO/9975EOF 3’ 26D

Von Duprin

99 Series - Trim (All trim supplied less cylinder)

990DT
Dummy Trim

990NL
Pull trim with cylinder Key retracts bolt (Rim cylinder not included)

990TP
Pull trim with thumb piece Key locks or unlocks latch (Rim cylinder not included)

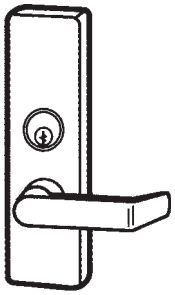

994L
Standard operation key locks or unlocks lever (Rim cylinder not included)

994L / 996L Series

Break away lever, allows lever to break away & drop into down position when abused.
It can easily be reset to operating position by up lift motion

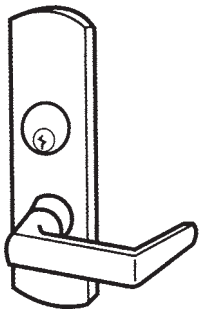

996L
With 06 lever Key locks & unlocks lever (Rim cylinder not included)

994L-NL

Night latch, key retracts latch bolt. Lever or knob is rigid. Use NL suffix. (Rim cylinder not included)

994L-BE

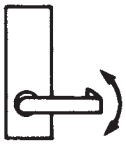

Blank escutcheon, lever or knob always active. Use BE suffix.

994L-DT

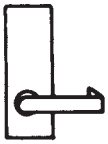

Dummy trim, lever or knob rigid for pull operation. Use DT

Stocked Product

Part #	Cylinder Required	Function	Finishes
990DT	no cylinder required	Dummy	26D,SP313
990NLM	Mortise cylinder 1-1/4"	NL Function Mortise	26D
990NLR	Rim Cylinder	NL Function Rim	313,26D
990TPR	Rim Cylinder	TP Function Rim/vertical	313,26D
996LM	Mortise Cylinder 1-1/4"	Entry Mortise	26D
994L/996L	Rim cylinder	Entry Rim/Vertical	313,26D
996LCV	Rim Cylinder	Entry Concealed Vertical	26D
994L/996L BE	none	Entry Blank Outside	313,26D
994L/996L DT	none	Dummy	313,26D
994L/996L NL	Rim	NL function Rim/Vertical	313,26D

All lever trim stocked with 06 Lever
996L also available in
03 & 17 lever - 26D only

Von Duprin

99 ALK - Exit alarm kit (supplied less cylinder)

Features

- Contains internal horn, when touch bar is depressed horn sounds
- Key switch uses a standard 1-1/4" mortise cylinder. Note: 99ALK supplied less cylinder
- 9 volt battery
- When battery is weak, the horn will sound intermittent signal
- Includes "EMERGENCY EXIT ONLY. ALARM WILL SOUND" decal

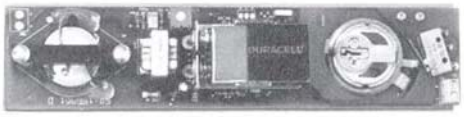

Stocked Product
Sprayed Aluminum and Dark Bronze

Mullion

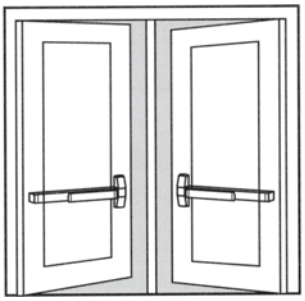

Removable mullions provide single door performance in double door openings with rim devices. Mullions are easily removed by loosening bottom set screw and removing top fitting cover. The top mullion fitting is attached to the frame and is concealed by the fitting cover.
Mullions are shipped presized, with mounting screws, and prepared for strike. Strike not included.
4954 - standard door application. Prepared for two 264 or 299 strikes for use with all Von Duprin panic rim exit devices.
VON DUPRIN

Stocked Product

9954	7'3"	Aluminum and Dark Bronze

Keyed Removable Mullion (supplied less cylinder)

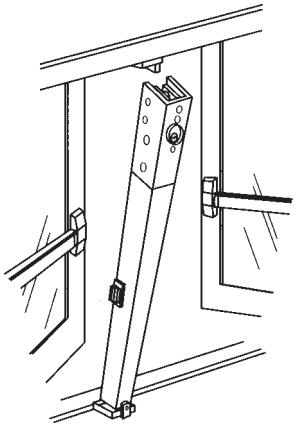

Keyed Removable mullions makes removal faster and easier by a single operation of the mortise cylinder. Mullions provide single door performance and security on double door applications. Once the mullion is removed, large equipment or furniture can freely pass through the opening. The unit will self lock when re-installed, without use of the cylinder key.
KR 4954 - key removable option supplied less cylinder - mortise cylinder 1-1/4"
9954 - UL Fire label mullion for up to 3 hour opening using Von Duprin fire exit rim devices.
MT54 - Wall mounted storage kit with floor and wall brackets for storage of key removable mullion description.

Stocked Product

MT54	Storage Kit	Aluminum
4954	7'2" and 8' 2"	Aluminum and Dark Bronze
KR4954	7' 6' and 8' 6"	Aluminum
KR54	Removable kit for 4954	
KR54F	Removable kit for 9954	

Von Duprin

Glass Bead Kits

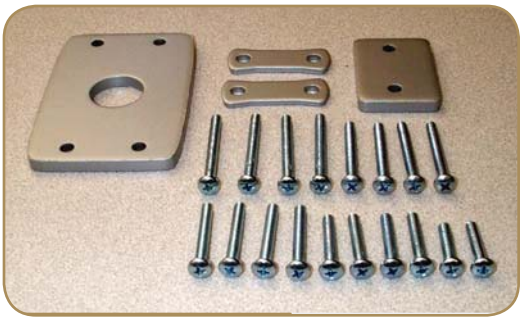

Glass bead conversion kits are available for 99 and 22 series devices for use on doors with raised glass beads. Each kit consists of 1/4" shim sets

Stocked Product

22GBK for Rim and Vertical		Aluminum and Dark Bronze
99GBK for Rim and Vertical		Aluminum and Dark Bronze
425	Sex Bolts Female only (pk.of 2)	Aluminum and Dark Bronze
98EXT	12" Extension Rod	Aluminum and Dark Bronze
98EXT36	36" Extension Rod	Aluminum and Dark Bronze
99EXT	12" Extension Rod F/99 & 33	Aluminum and Dark Bronze
99EXT36	36" Extension Rod F/99 & 33	Aluminum or Dark Bronze
110WDNL	Wood Door Kit	
110MDNL	Metal Door Kit	

99 Series - Parts

F/9927
bottom/top case less cover

425
sex bolts

Electric Exit Devices - Electric Latch Retraction (EL)

- EL99EO
- 3/4" (19mm) thrown latch bolt

Solenoid Specifications:

- continous duty - 24 VDC
- current in-rush - 16 Amps
- current holding - 0.3 Amps

To order, specify

Standard - use prefix EL, example EL99L
Hex key dogging - use prefix HD-EL, example HD-EL99L
Special center case dogging - use prefix SD-EL, example SD-EL99L

Stocked Product:

EL99EO	36"	US26D
ELCONVKIT	36"	Conversion Kit
RX	Switch, request to exit	

EL Conversion Kit

The EL kit allows existing exit devices to be converted to EL devices except fire rated devices

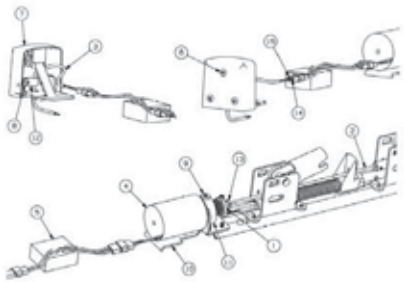

Request to Exit Switch

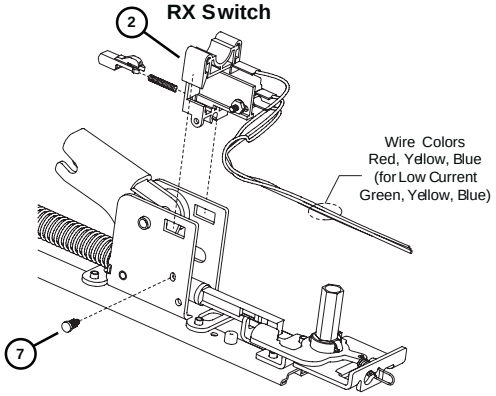

Von Duprin

Series PS902 - Power Supply

- The series PS902 power supply is designed for electromagnetic locks and electric strikes on single door applications. The output power is field selectable for either 24VDC @ 1 ampere or 12VDC @ 2 ampere. Standard input 120VAC @ 0.6 ampere and 240VAC @ 0.3 ampere available. Terminal block will accept up to 14 gauge stranded wire.

Series PS9142RS - Power Supply

- The series PS9142RS power supply is designed to operate a wide variety of electrical products.
- The regulated output power is field selectable for either 24VDC @ 2 ampere or 12VDC @ 4 ampere.
- Standard input 120VAC @ 1.0 ampere
- PS9142RS complete for 2 doors.

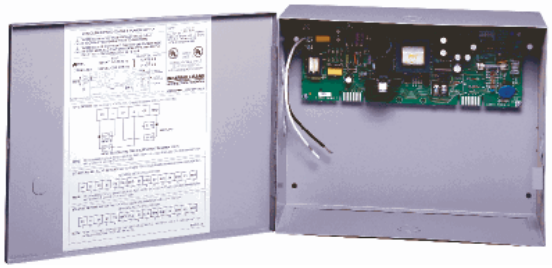

EPT10 - Electrical Power Transfer

- Electric power transfer provides a means of transferring electrical power from a door frame to the edge of a swinging door. The units are completly concealed when the door is in the closed position, and are ideally suited for installations involving abuse or heavy traffic.
- Door applications; up to 5" butt
  Hinges - 180° swing, 5-1/2" butt
  Hinges - 130° swing, 6" butt
  Hinges - 110° swing, and 3/4" offset pivots 180° swing.

Stocked Product

PS902
PS9142RS
EPT10 Aluminum and Dark Bronze

5100 - Electric Strike

Features

- Three faceplates included for hollow metal, wood or aluminum frames
- Internal 12/24 VDC dual voltage solenoid
- Adjustable keeper
- Available with both fail safe / fail secure options

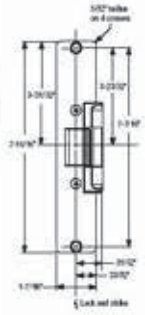

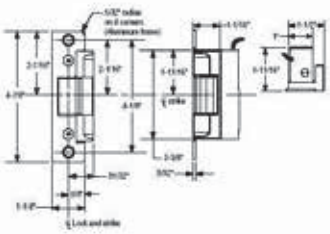

6211 - Electric Strike

Electric strike for use on new installations with mortise locks without deadbolt or cylindrical locks on single door, hollow metal frame applications.

Stocked Product

6211 24VDC 32D

Weslock-*Molten Bronze Collection*

Entry Handle Features
- Meets ANSI A 156.2 Grade II lock standards
- 5-pin Cylinder
- Removable knobs/levers prevents scratching during installation
- Weslock Keyway standard
- Solid Molten Bronze
- 1" throw deadbolt with two hardened steel rollers -prevents sawing
- Emergency Egress function available.

Entry Handle Specifications
- Adjustable Latches 2-3/8" or 2-3/4" with removable faceplates
- Adjusts to door thickness from 1-3/4" to 2"
- Optional door thickness from 2" to 2-1/4"

Stonebriar/Wiltshire
- Fits doors prepared with 1-5/8" or 2-1/8" top cross hole, 2-1/8" bottom cross hole and 1" edge hole
- 5-1/2" center to center cross hole spacing

Entry Handle Warranty
- Limited Lifetime Mechanical Warranty

Deadbolt Features
- 5-pin Cylinder
- 1" throw deadbolt with two hardened steel rollers
- Heavy duty security strike with 3" screws
- Weslock Keyway standard
- Removable faceplates allow for radius or square latches (drive-in latch available)

Deadbolt Specifications
- Adjustable latches 2-3/8" or 2-3/4" with removable faceplates
- Fits doors prepared with 2-1/8" cross holes and 1" edge hole
- Adjusts to door thickness from 1-3/8" to 2"
- Optional door thickness from 2" to 2-1/4"
- Grade II design for extra strength and security
- Zinc die-cast cylinder with 5-pin tumbler security

Deadbolt Warranty
- Limited Lifetime Mechanical Warranty parts

ENTRY HANDLES

Aspen

Greystone

Stonebriar

Wiltshire

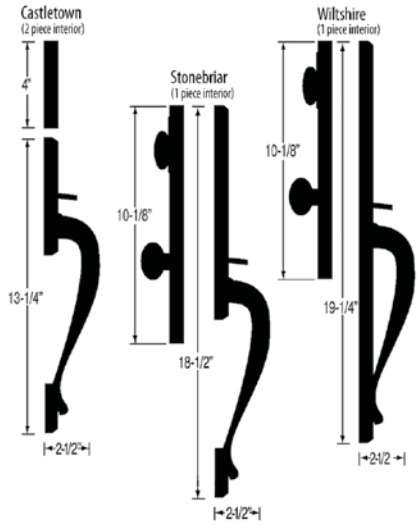

DEADBOLTS

Square

Premiere

Round

DISCONTINUED
Call for availability

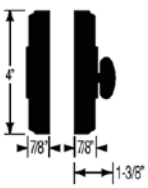

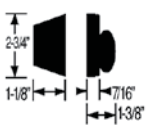

Stocked Product

ENTRY HANDLES OUTSIDE KEYED:	Finish
7631 Stone Briar	1 (10B)
7680 Wiltshire	1 (10B)
7925 Aspen	1 (10B)
7931 Greystone	1 (10B)
INSIDE HANDLES, SINGLE CYLINDER	
7600 Carlow(H), Wexford(F), Durham(M)	1 (10B)
7800 Carlow, Wexford, Durham	1 (10B)
7900 Carlow, Wexford, Durham	1 (10B)
DEADBOLTS	
7571 Premire Deadbolts	1 (10B), 2 (Black) N (Satin Nickel)
7971 Square Deadbolts	1 (10B)

Call For Availability On Other Finishes & Designs

DOORS & SPECIALTIES CO.
COMMERCIAL DOORS • FRAMES • HARDWARE

Weslock-*Molten Bronze Collection*

Knob & Lever Features

- Meets ANSI A 156.2 Grade II lock standards
- 5-pin Cylinder
- Removable knobs/levers prevents scratching during installation
- Panic-Proof Keylock/Privacy - one turn of interior knob/lever unlocks & opens door
- Push Button locking in rosette
- Weslock Keyway standard
- Solid Molten Bronze Levers, Knobs & Rosettes
- Dual spindles made of hardened steel offer bind free operation and easy alignment.
- Lever strength latch included with all lever products

Knob & Lever Specifications

- Adjustable Latches 2-3/8" or 2-3/4" with removable faceplates
- Fits doors prepared with 2-1/8" cross hole & 1" edge hole
- Adjusts to door thickness from 1-3/8" to 1-3/4"
- Optional door thickness from 1-3/4" to 2-1/4"
- Grade II cylindrical design for extra strength and security

Knob & Lever Warranty

- Limited Lifetime Mechanical Warranty

KNOBS, LEVERS & ROSETTES

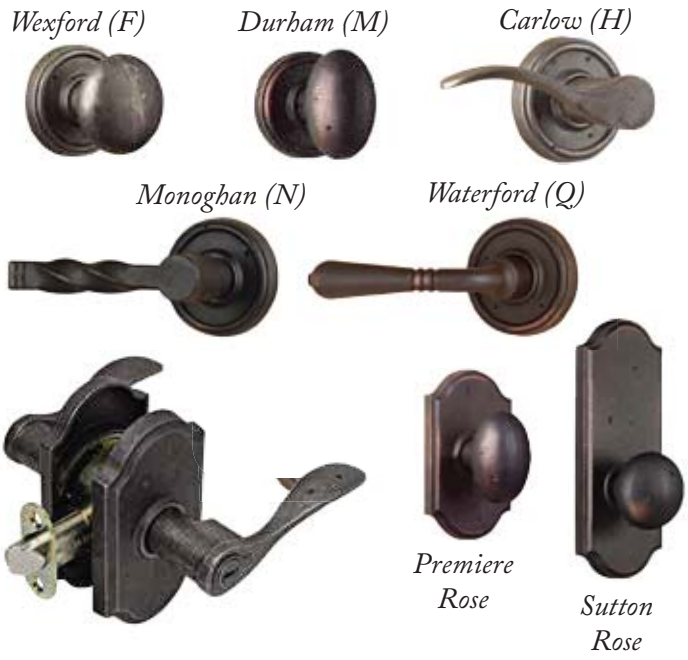

Stocked Product

Wexford(F) Knob X Premiere

7100	Passage
7105	Dummy
7110	Privacy
7140	Keyed Lock

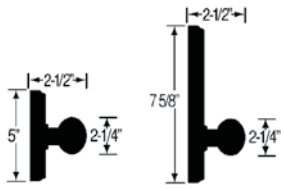

Durham(M)Knob X Premiere

7100	Passage
7105	Dummy
7110	Privacy
7140	Keyed Lock

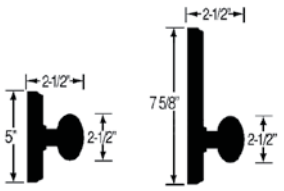

Carlow(H) Handed Lever Set X Premiere

R/L7100	Passage
R/L7105	Dummy
R/L/7110	Privacy
R/L7140	Keyed Lock

Carlow(H) X Sutton

R/L7100	Passage
R/L7105	Dummy
R/L7110	Privacy
R/L7140	Keyed Lock

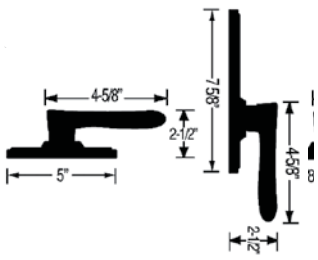

Waterford(Q) Lever Set X Premiere

7100	Passage
7105	Dummy
7110	Privacy
7140	Keyed Lock

Monoghan(N) Lever Set X Premiere

7100	Passage
7105	Dummy
7110	Privacy
7140	Keyed Lock

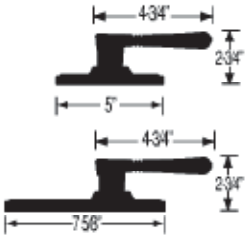

Monoghan(N) X Sutton, Handed

7100	Passage
7105	Dummy
7110	Privacy

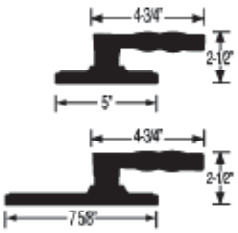

Available Finishes:
Oil Rubbed Bonze(1)
Black(2) Except Sutton Roses
Pewter(P)- Discontinued, call for availability.

Call For Availability On Wexford, Durham, Waterford W/ Sutton Rose

Weslock-*Elegance Collection*

Entry Handle Features
- 5-pin Cylinder
- Solid Brass
- 1" throw deadbolt with two hardened steel rollers - prevents sawing
- Weslock Keyway standard
- Removable knobs/levers prevents scratching during installation
- Emergency Egress function available

Entry Handle Specifications
- Adjustable latches 2-3/8" or 2-3/4" with removable faceplates
- Fits doors prepared with 1-5/8" or 2-1/8" top cross hole, 2-1/8" bottom cross hole and 1" edge hole
- Adjusts to door thickness from 1-3/4" to 2"
- Optional door thickness from 2" to 2-1/4"
- 5-1/2" center to center cross hole spacing

Entry Handle Warranty
- Limited Lifetime Mechanical Warranty
- Limited Lifetime Finish Warranty
- Lifetime PVD Finish on exterior Polished Brass

Deadbolt Features
- 5-Pin Cylinder
- 1" throw deadbolt with two hardened steel rollers - prevents sawing
- Heavy duty security strike with 3" screws
- Weslock Keyway standard

Deadbolt Specifications
- Adjustable latches 2-3/8" or 2-3/4" with removable faceplates
- Fits doors prepared with 2-1/8" cross holes and 1" edge hole
- Adjusts to door thickness from 1-3/8" to 2"
- Optional door thickness from 2" to 2-1/4"
- Grade II design for extra strength and security

Deadbolt Warranty
- Limited Lifetime Mechanical Warranty
- Limited Lifetime Finish Warranty
- Lifetime PVD Finish on exterior Polished Brass

ENTRY HANDLES

Mansion™ *Woodward I* *Stanford™* *Woodward II*

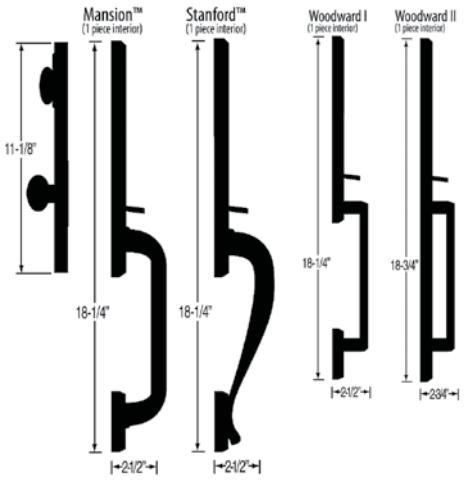

DEADBOLTS

Premiere *Oval* *Woodward*

Premiere & Oval Woodward

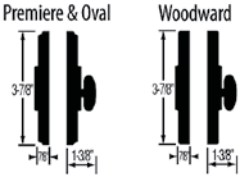

Stocked Product

Outside Handle Sets:	**Finish**
6651 Mansion	1,
6661 Stanford	1,N
6681 Woodward I	1,N
6691 Woodward II	1,N

Inside Handle Sets Single Cylinder

6600 Mansion	U1,J1
6400 Stanford	U1, UN, J1, JN
6200 Woodward	2N,21,PN,IN,I1,P1

Deadbolts:		**Finish**
1771 Premiere	Single Cylinder	1,N
3771 Woodward	Single Cylinder	1,N
3772 Woodward	Double Cylinder	1,N

Discontinued Items: Call For Availability

1772 Premiere Deadbolt	Double Cylinder
2771 Oval Deadbolt	Single Cylinder
2772 Oval Deadbolt	Double Cylinder

DOORS & SPECIALTIES CO.
COMMERCIAL DOORS • FRAMES • HARDWARE

Weslock-*Elegance Collection*

Knob & Lever Features

- Meets ANSI A 156.2 Grade II lock standards
- 5-pin Cylinder
- Removable knobs/levers prevents scratching during installation
- Panic-Proof Keylock/Privacy - one turn of interior knob/lever unlocks & opens door
- Push Button locking in rosette
- Weslock Keyway standard
- Zinc diecast levers and rosettes
- All brass knobs
- Dual spindles made of hardened steel offer bind free operation and easy alignment
- Lever strength latch included with all lever products

Knob & Lever Specifications

- Adjustable Latches 2-3/8" or 2-3/4" with removable faceplates
- Fits doors prepared with 2-1/8" cross hole & 1" edge hole
- Adjusts to door thickness from 1-3/8" to 1-3/4"
- Optional door thickness from 1-3/4" to 2-1/4"
- Grade II cylindrical design for extra strength and security.

Knob & Lever Warranty

- Limited Lifetime Mechanical Warranty
- Limited Lifetime Finish Warranty

KNOBS, LEVERS & ROSETTES

Impresa™ Knob Woodward (I)

Impresa™ Knob Premiere (I)

Julienne Knob Premiere (J)

Urbana Lever Woodward (2)

Utica Lever Woodward (P)

Bordeáu Lever Premiere (U)

Bordeáu Lever Oval (U)

Julienne Knob Oval (J)

Legacy Lever Oval (Y)

Stocked Product

Impressa (I) Knob

Premiere
1700 Passage
1705 Dummy
1710 Privacy
1740 Keyed Lock
Woodward
3700 Passage
3705 Dummy
3710 Privacy
3740 Keyed Lock

Julienne(J) Knob

Premiere
1700 Passage
1705 Dummy
1710 Privacy
1740 Keyed Lock

Impresa™ Premiere & Woodwar

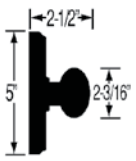

Julienne™ Premiere & Oval

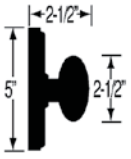

Bordeáu™ Premiere & Oval

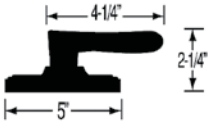

Bordeau(U) Handed Levers

Premiere
R/L1700 Passage
R/L1705 Dummy
R/L1710 Privacy
R/L1740 Keyed Lock

Urbana(2) Levers

Woodward
3700 Passage
3705 Dummy
3710 Privacy

Utica(P) Levers
Woodward
3700 Passage
3705 Dummy
3710 Privacy
3740 Keyed Lock
Stocked Finishes

Legacy™ Premiere & Oval

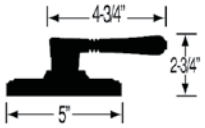

Urbana Woodward

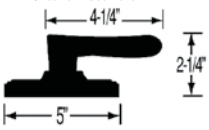

Utica Woodward

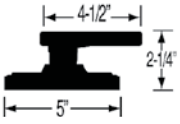

Finish: Oil Rubbed Bronze(1), Satin Nickel(N)

Call For Availability On Oval Rosettes

Weslock-*Traditionale Collection*

2100 Series Entry Handle Features

- 5-pin Cylinder
- Solid Brass
- 1" throw deadbolt with two hardened steel rollers - prevents sawing
- Weslock Keyway standard

2100 Series Entry Handle Specifications

- Adjustable latches 2-3/8" or 2-3/4" with removable faceplates
- Fits doors prepared with 2-1/8" Top and 2-1/8" Bottom cross holes and 1" edge hole
- Adjusts to door thickness from 1-3/8" to 1-3/4"
- 5-1/4" minimum center to center cross hole spacing
- Optional door thickness 1-3/4" to 2-1/4"

2100 Series Entry Handle Warranty

- Limited Lifetime Mechanical Warranty
- Limited Lifetime Finish Warranty
- Lifetime PVD Finish on exterior Polished Brass

DISCONTINUED - CALL FOR AVAILABILITY

1300 Series Entry Handle Features

- 5-pin Cylinder
- Solid Brass
- 1" throw deadbolt with two hardened steel rollers -prevents sawing
- Meets 2-point locking codes

1300 Series Entry Handle Specifications

- Non-adjustable latches 2-3/8" or 2-3/4" with removable faceplates
- Fits doors prepared with 2-1/8" Top and 2-1/8" Bottom cross holes and 1" edge hole
- Adjusts to door thickness from 1-3/4" to 2-1/4"
- 8" minimum center to center cross hole spacing

Deadbolt Features

- Heavy duty security strike with 3" screws
- 5-pin Cylinder
- 1" throw deadbolt with two hardened steel rollers - prevents sawing
- ADA recommended, extra large interior thumbturn
- 1/4" Diameter Through Bolt (671/672 Models)
- Rotating Collar (671/672 Models)
- Heat treated assembly housing screws (671/672 Models)
- Anti-Force Shield (671/672 Models)
- Meets ANSI A 156.2 Grade II Cylindrical lock standards

Deadbolt Specifications

- Adjustable latches 2-3/8" or 2-3/4" with removable faceplates
- Fits doors prepared with 2-1/8" cross holes and 1" edge hole
- Adjusts to door thickness from 1-3/8" to 2"
- Optional door thickness from 2" to 2-1/4"

LEXINGTON™
(2100 SERIES)

LEXINGTON™
(1300 SERIES)

DEADBOLTS

Stocked Product

2115 Lexington Outside Handle Set
Finish: Oil Rubbed Bronze (1), Satin Nickel (N)

2100 Inside Trim Sets
Impressa(I)
Julienne(J)
Bordeau(U),
Finish: Oil Rubbed Bronze (1), Satin Nickel (N)

Lexington 1300 Series: Call For Availability

Deadbolts 671 & 672
Finish: Lifetime Brass, Antique Brass, Stain Chrome, Oil Rubbed Bronze, Satin Nickel

Weslock-*Traditionale Collection*

Knob & Lever Features

- Cylindrical Door Locks
- Meets ANSI A 156.2 Grade II lock standards
- 5-pin Cylinder
- Locksets have pre-installed installation screws, which are concealed behind a snap-on rosette
- Removable knobs/levers prevents scratching during installation
- Panic-Proof Keylock/Privacy- one turn of interior knob/lever unlocks & opens door
- Push Button locking in Rosette
- Weslock Keyway standard
- Zinc diecasted levers
- All brass knobs & rosettes

Knob & Lever Specifications

- Adjustable Latches 2-3/8" or 2-3/4" with removable faceplates
- Fits doors prepared with 2-1/8" cross hole & 1" edge hole
- Adjusts to door thickness from 1-3/8" to 1-3/4"

Warranty

- Limited Lifetime Mechanical Warranty
- Limited Lifetime Finish Warranty
- Lifetime PVD Finish on exterior Polished Brass

KNOBS & LEVERS

BALL

ELEGANTI™

JULIENNE

IMPRESA™

ACCESS™

BORDEÁU™

URBANA

DISCONTINUED
Call for availability

Stocked Product

Ball (B) Knob
Finish: US3
600 Passage
605 Dummy
610 Privacy
640 Keyed Lock

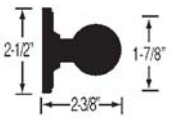

Impressa (I) Knob
Finish: 1,N
600 Passage
605 Dummy
610 Privacy
640 Keyed Lock

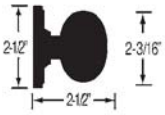

Julienne Knob (J)
Finish: 3,1,N
600 Passage
605 Dummy
610 Privacy
640 Keyed Lock

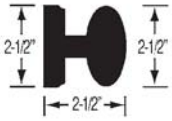

Bordeau (U) Handed Levers
Finish: 1,N
R/L600 Passage
R/L605 Dummy
R/L610 Privacy
R/L640 Keyed Lock

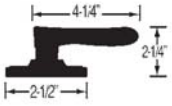

Eleganti (E) Knob
Finish: A
600 Passage
610 Privacy
640 Keyed Lock

Access (A) Levers
Finish: D
600 Passage
605 Dummy
610 Privacy
640 Keyed Locks

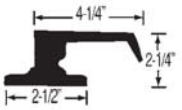

Antique Brass (A)
Polished Brass (3)
Satin Chrome (D)
Satin Nickel (N)
Oil Rubbed Bronze (1)

DOORS & SPECIALTIES CO.
COMMERCIAL DOORS • FRAMES • HARDWARE

Weslock-*Interconnected*

1400 Series Entry Handle Features

- 5-pin Cylinder
- 1" throw deadbolt with two hardened steel rollers - prevents sawing
- Available with any interior Traditionale Collection knob or lever style
- Solid Brass
- Textured interior Nolin plate
- Weslock Keyway standard
- Meets 2-point locking code

1400 Series Entry Handle Specifications

- Non-adjustable latches 2-3/8" or 2-3/4" with removable faceplates
- Fits doors prepared with 2-1/8" Top & 2-1/8" Bottom cross holes & 1" edge hole
- Adjusts to door thickness from 1-3/4" to 2-1/4"
- 2-7/8" center to center cross hole spacing

1400 Series Warranty

- Limited Lifetime Mechanical Warranty
- Limited Lifetime Finish Warranty
- Lifetime PVD Finish on exterior Polished Brass

1500 Series Unigard™ Features

- 5-pin Cylinder
- 1" throw deadbolt with two hardened steel rollers - prevents sawing
- Panic-Proof - one turn of the interior knob/lever unlocks & opens the door
- Available with any interior Traditionale Collection knob or lever style
- Smooth interior Nolin plate (on 1530/1550 styles)
- Weslock Keyway standard

1500 Series Unigard™ Specifications

- Non-adjustable latches 2-3/8" or 2-3/4" with removable faceplates
- Fits doors prepared with 2-1/8" Top & 2-1/8" Bottom cross holes & 1" edge hole
- Adjusts to door thickness from 1-3/4" to 2-1/4"
- 2-7/8" center to center cross hole spacing

1500 Series Unigard™ Warranty

- Limited Lifetime Mechanical Warranty
- Limited Lifetime Finish Warranty
- Lifetime PVD Finish on exterior Polished Brass

LOCKSETS

LEXINGTON™ *(1400 SERIES)*

COLONIAL™ *(1400 SERIES)*

WOODWARD™ *(1400 SERIES)*

WOODWARD

IMPRESA

BORDEÁU

ELEGANTI

UNIGARD™ *(1500 SERIES)*

Stocked Product

1444 Lexington Outside Handle Set	Finish: 1,N,
1414 Colonial Outside Handle Set	Finish: A
1424 Woodward Out Side Handle Set	Finish: 1, N,
1400 Lexinton/Colonial Inside Handle Set Trim	Finish: 1,N,A
Available with: Impressa Knobs	
Eleganti Knob (US5 only)	
Bordeau Levers	
1420 Woodward Inside Handle Set Trim	Finish: 1,N
Available with: Impressa Knobs	
Utica Levers (US15 only)	
1501EA Unigard x Eleganti	Finish: US5

Weslock - *Accessories and Parts*

MOLTEN BRONZE

SC12987XM
Interior Keyed Knob, Schlage C Keyway

SC12292X
Interior Keyed Lever, Schlage C Keyway

Stocked Product
Black (2)

SC14027XM - **Handlesets**
Schlage C keyway

Stocked Product
Oil Rubbed Bronze (1)
Weathered Pewter (P)
Black (2)

DISCONTINUED
Call for availability and special pricing

ELEGANCE

SC12987 - **Interior Keyed**
Schlage C keyway

Stocked Product
Satin Nickel (N)
Oil Rubbed Bronze (1)
Polished Brass (3)

SC14027 - **Handlesets Keyed**
Schlage C keyway

Stocked Product
Satin Nickel (N)
Oil Rubbed Bronze (1)
Polished Brass (3)

DISCONTINUED
Call for availability and special pricing

LATCHES

12720 – **Adjustable Spring Latch**
32720 – **Adjustable Lever Strength Spring Latch Adjustable Dead Bolt**

Stocked Product
All finishes

12721 – **Adjustable Dead Latch**
32721 – **Adjustable Lever Strength Dead Latch**

DISCONTINUED
Call for availability and special pricing

Weslock - *Accessories and Parts*

WS001012 - Rekeying Kit

00102 - Depth Key Set

105X6 - Plug Follower

Yale

4800LN Series - Interconnected Locks

The 4800LN series meets accessibility guidelines of the Americans with Disabilities Act and the requirements of the Uniform Federal Accessibility Standards and ANSI 117.1, all requiring ease of accessibility for the handicapped.

Specifcations:

Backset: The 4800LN series is available with a 2-3/4" or (2-3/8" special order) backset.

Fire Listings: 4800LN series locksets are UL listed for use on fire doors for up to 90 minutes.

Strikes: Lockset - T-Strike (Model 371) standard.
Deadbolt - D245 standard, 542 optional.

C Keyway 6 pin

Warranty: The 4800LN series carries a one-year mechanical warranty.

* Simulated painted finish meeting ANSI/BHMA standards for wear and durability.

Installation:

4800LN series interconnected locks use a 4" center to center dimension and conform to ANSI/BHMA Specifications A156.115 which cover hardware preparations for steel doors and steel frames and A156.115-W which cover hardware preparations for wood doors with wood or steel frames.

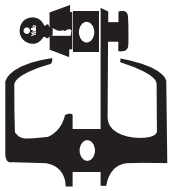

4851LN (F95)
Entrance, Single Locking
Deadbolt operated by key from outside or by thumbturn from inside and automatically deadlocks when fully thrown. Latchbolt retracted by lever from either side. Turning inside lever retracts deadbolt and latchbolt simultaneously for immediate exit.

Augusta AU

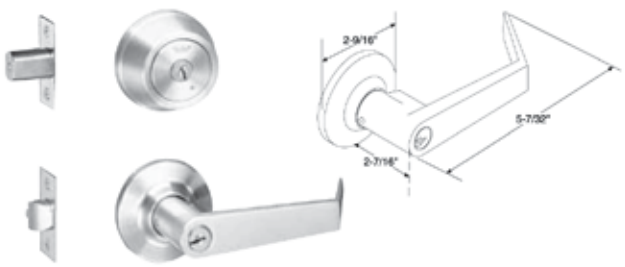

Stocked Product

No.	Function	Finish
4851LN	Entrance, Single Locking	613, 626

Yale

*in*Touch® Stand-alone Touchscreen Access Lock

Users benefit from an interactive touchscreen that makes day-to-day access effortless and offers voice-guided programming for fast and simple updates to user information in the event of staffing changes or security breaches.

Ideal for a wide variety of applications, *inTouch* is recommended for management offices, patient records storage, storerooms, staff lounges, restroom doors, etc. Anywhere that requires simple controlled access is an ideal place for *inTouch*!

inTouch is engineered for quick & easy installation and fits into the standard ANSI/BHMA A156.115 cylindrical locks with lever door prep with one additional 3/4" hole and 7 screws including latchbolt and strike.

The *inTouch* Series lever design meets accessibility guidelines of the Americans with Disabilities Act and the requirements of the Uniform Federal Accessibility Standards and ICC/ANSI A117.1

Certified ANSI/BHMA A156.2, Series 4000 Grade 1.

The *inTouch* stand-alone touchscreen access lock features the Free Wheeling lever mechanism. When the outside lever is locked, it will rotate freely up and down while remaining securely locked.

Specifcations:

Door Thickness: 1-3/4" (44mm) door thickness standard. For use on 1-3/8" thick doors, a special thin door kit must be used. To order 1-3/8" thin door kit, specify part number 14-4761-0106. This kit includes inside and outside escutcheon spacers as well as a 2-3/8" latchbolt.

Backset: The 4600(LN) series cylindrical locksets are available with a 2-3/4" (70mm) standard or 2-3/8" (60mm) optional backset.

Latchbolts: 1/2" (13mm) throw deadlocking latchbolt supplied standard.

Power Source: Powered by 4 AA alkaline batteries.

Strikes: ANSI strike 4-7/8" x 1-1/4" x 1-1/4" (124mmx32mmx32mm)

C Keyway 6 pin

Fire Listings: Functions are UL - cUL Fire Listed for use on fire doors having a rating up to and including 3-hours.

Warranty: The *inTouch* stand-alone touchscreen access lock carries a three-year warranty. Likewise, *inTouch* carries a lifetime warranty against lever sag and lever spring breakage.

Handing: Locksets are non-handed.

Installation:

InTouch uses a cylindrical lock with levers door preparation with the addition of one 3/4" hole, therefore conforming to modified ANSI/BHMA Specifications A156.115 which cover hardware preparations for steel doors and steel frames and A156.115-W which cover hardware preparations for wood doors with wood or steel frames.

Yale

*in*Touch® Stand-alone Touchscreen Access Lock

Features:

Touchscreen as shown when not activated

Touchscreen – Responds to human touch enabling convenient entrance or access to programming menu. After operation has been completed, the lock reverts to sleep mode.

Ergonomic Design - Slanted touchscreen optimizes line of sight, and backlit touchscreen provides illuminated access in low light conditions.

Return to Previous - During programming, this key can be pressed to return to the previous step or menu setting.

Lockout Mode - Restricts user PIN code access.

Low Battery Indication - Blinking designation signals internal 4 AA alkaline batteries are low.

Cylinder/Key Override - Accepts Yale® fixed core component cylinders. Also available to accept small format interchangeable core (SFIC). Allows integration with existing key systems.

Passage Mode - Allows continuous entry for non-restricted traffic.

Solid Escutcheon - All metal escutcheon provides quality and durability.

Touchscreen as shown when activated

Yale

*in*Touch® Stand-alone Touchscreen Access Lock

Additional Features:

- Menu access to voice guided programming available through touchscreen.
- Pre-programmed voice options: English (default), Spanish or French.
- Visual and tone playback confirmation provides positive reassurance while operating.
- Silent mode available to disable tone playback for use in quiet areas.
- Auto re-lock time – default of 5 seconds.
- Keypad Shutdown – Deters tampering by disabling the keypad for a default of 180 seconds after five successive wrong code entries.
- Weather resistant. Operational in temperatures ranging from -40°F to +140°F (-40°C to +60°C) at 95% relative humidity.

Lever Design
Augusta AU
Lever : Cast Zinc

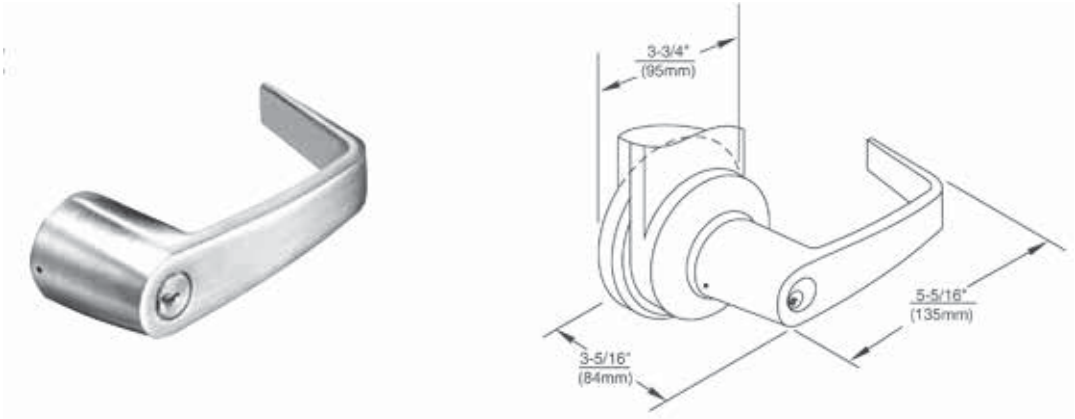

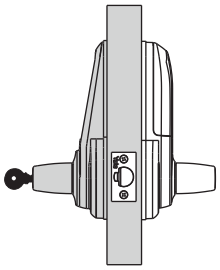

Outside Inside

E4761LN
With Cylinder Override

- For doors that require mechanical key override.
- Latchbolt retracted by lever outside with valid PIN code; by use of mechanical key, or by operating lever inside.
- Inside lever always active.
- Deadlocking latchbolt.

Stocked Product

No.	Finish
E4761LN	626

Yale

4700(LN) Series - Grade 1 Cylindrical Locks

The 4700LN lever designs meets accessibility guidelines of the Americans with Disabilities Act and the requirements of the Uniform Federal Accessibility Standards and ANSI A117.1, all requiring ease of accessibility for the handicapped.

Certified ANSI/BHMA A156.2, Series 4000 Grade 1.

Features:

All 4700(LN) Series locking functions feature the Free Wheeling lever mechanism. When the outside lever is locked, it will rotate freely up and down while remaining securely locked.

Specifcations:

Backset: The 4700(LN) series cylindrical locksets are available with a 2-3/4" (70mm) standard backset.

Fire Listings: 4700(LN) Series locksets are UL - cUL listed for use on fire doors having a rating up to and including 3 hours.

Strikes: ANSI strike 4-7/8" x 1-1/4" x 1-1/4"

Latchbolts: 2-3/4" (70mm) backset, 1/2" (13mm) throw latchbolt

C Keyway 6 pin

Handing: Locksets are non-handed and easily field reversible. supplied standard.

Warranty: The 4700(LN) series cylindrical locks carry a five-year mechanical warranty.

Trim Design
Augusta AU
Lever : Cast Zinc
Rose: Wrought Brass

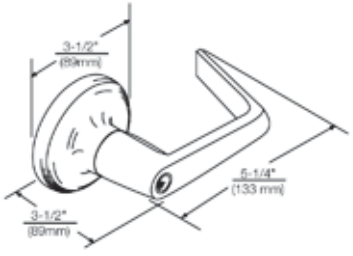

Yale

4700(LN) Series - Grade 1 Cylindrical Locks

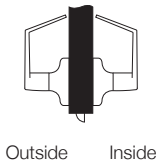

4701LN (F75)
Passage or Closet Latch
- For doors that do not require locking.
- Either lever/knob operates latchbolt at all times.

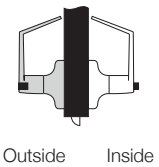

4702LN (F76A)
Privacy, Bedroom or Bath Lock
- For lavatory or other privacy doors.
- Either lever/knob operates latchbolt unless outside lever/knob is locked by pushbutton inside.
- Button automatically releases when inside lever/knob is turned or door is closed.
- Emergency release in outside lever.
- Inside lever/knob always active.

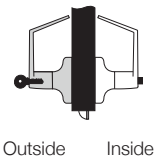

4704LN (F82B)
Entry Lock
- For entrance or office doors.
- Deadlocking latchbolt.
- Either lever operates latchbolt (except when outside lever is locked from inside).*
- Pushing button in inside lever locks outside lever. (Automatically releases when inside lever is turned or key is rotated in locked outside lever.)
- Latchbolt is operated by key in outside lever or by rotating inside lever.
- Inside lever always active.

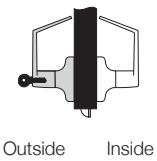

4705LN (F86)
Storeroom or Closet Lock
- For use on storeroom, utility, exit doors.
- Deadlocking latchbolt.
- Latchbolt operated by lever/knob inside, key in outside lever/knob.
- Outside lever/knob always rigid.
- Inside lever/knob always active.

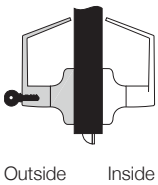

4708LN (F84)
Classroom Lock
- For classroom or utility room doors.
- Deadlocking latchbolt.
- Either lever/knob operates latchbolt (except when outside lever is locked by key).
- Inside lever/knob always active.
- Key releases outside lever/knob.

Stocked Product

No.	Function	Finish
4701LN	Passage or Closet Latch	613, 626
4702LN	Privacy, Bedroom or Bath Lock	613, 626
4704LN	Entry Lock	613, 626
4705LN	Storeroom or Closet Lock	613, 626
4708LN	Classroom Lock	613, 626

Yale

4600(LN) Series - Grade 2 Cylindrical Locks

The 4600LN series lever designs meets accessibility guidelines of the Americans with Disabilities Act and the requirements of the Uniform Federal Accessibility Standards and ANSI A117.1, all requiring ease of accessibility for the handicapped.

Certified ANSI/BHMA A156.2, Series 4000 Grade 2.

Specifcations:

Backset: The 4600(LN) series cylindrical locksets are available with a 2-3/4" (70mm) standard.

Latchbolts: 2-3/4" (70mm) backset, 1/2" (13mm) throw latchbolt.

Through-Bolts: 4600LN cylindrical lever locks are supplied with optional through-bolts. Installation of through-bolts is at the discretion of the installer.

Fire Listings: 4600(LN) series locksets are UL - cUL listed for use on fire doors having a rating up to and including 3 hours.

Warranty: The 4600(LN) series cylindrical locks carry a three-year mechanical warranty.

Handing: Locksets are non-handed and easily field reversible.

Trim Design
Augusta AU
Lever : Cast Zinc
Rose: Wrought Brass

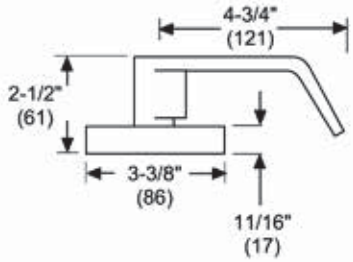

Yale

4600(LN) Series - Grade 2 Cylindrical Locks

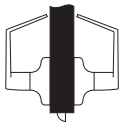

4601LN (F75)
Passage or Closet Latch
- For doors that do not require locking.
- Either lever/knob operates latchbolt at all times.

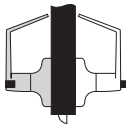

4602LN (F76B)
Privacy, Bedroom or Bath Lock
- For lavatory or other privacy doors.
- Either lever/knob operates latchbolt unless outside lever/knob is locked by pushbutton inside.
- Button automatically releases when inside lever/knob is turned or door is closed.
- Emergency release in outside lever.
- Inside lever/knob always active.

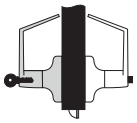

4604LN (F82B)
Entry Lock
- For entrance or office doors.
- Deadlocking latchbolt.
- Either lever operates latchbolt (except when outside lever is locked from inside).*
- Pushing button in inside lever locks outside lever. (Automatically releases when inside lever is turned or key is rotated in locked outside lever.)
- Latchbolt is operated by key in outside lever or by rotating inside lever.
- Inside lever always active.

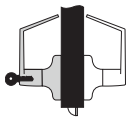

4605LN (F86)
Storeroom or Closet Lock
- For use on storeroom, utility, exit doors.
- Deadlocking latchbolt.
- Latchbolt operated by lever/knob inside, key in outside lever/knob.
- Outside lever/knob always rigid.
- Inside lever/knob always active.

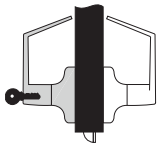

4608LN (F84)
Classroom Lock
- For classroom or utility room doors.
- Deadlocking latchbolt.
- Either lever/knob operates latchbolt (except when outside lever is locked by key).
- Inside lever/knob always active.
- Key releases outside lever/knob.

Stocked Product

No.	Function	Finish
4601LN	Passage or Closet Latch	613, 626
4602LN	Privacy, Bedroom or Bath Lock	613, 626
4604LN	Entry Lock	613, 626
4605LN	Storeroom or Closet Lock	613, 626
4608LN	Classroom Lock	613, 626

Yale

2100 Series - Flatbar Exit Devices

The 2100(F) is a rim exit device to be used with single doors or pairs of doors constructed of metal, wood or composite materials. The 2100(F) can be paired with a wide variety of trims to meet many applications.

Certified ANSI/BHMA
A156.3, Grade 1.

Listed for use on fire doors having a rating up to and including 3-hours unless otherwise noted.

2100 exit device lever trims feature the unique Free Wheeling lever mechanism. This Free Wheeling trim features a clutch mechanism which allows the lever to float down 60° when operated in the locked condition, greatly improving vandal resistance.

The 2100 series exit devices carry a three-year warranty. Rose trims carry a two-year warranty.

ANSI/BHMA Certified: A156.3 Type 1, Grade 1

Features:

- Designed for wide stile doors
- Non-handed for easy installation
- Steel interlock “E” bracket maintains door-to-mullion relationship in fire-labeled devices
- Deadlocking pullman latchbolt positively engages roller strike

Applications:

- Single swing doors
- Pairs of doors (mullion required)
- Metal, wood or composite door materials

Specifcations:

Door Opening Width:
-36 for 30” - 36” (76cm - 91cm) doors
-48 for 42” - 48” (107cm - 122cm) doors
Door Thickness: 1-3/4” (44mm) standard. Optional door thicknesses available to 4-1/2”; specify door thicknesswhen ordering.
Minimum Stile Width: 4-1/2” (114mm)
Projection: 2-1/2” (64mm) active, 1-3/4” (44mm) depressed
Latchbolt: 3/4” (19mm) deadlocking stainless steel pullman-type
Strike: 757F, 793 optional (double door application, panic only)
Fasteners: Machine screws and wood door fasteners standard for panic hardware. Sex nuts and bolts supplied standard for fire exit hardware.
Trims: 440F series rose trim with escutcheon plate
Dogging: Hex key dogging supplied standard on panic devices

Options:

MicroShield®
Warranty: 3-year limited

UL/cUL Listed: FVSR/FVSR7 - Panic hardware
GXHX/GXHX7 - Fire exit hardware (F)
(4’ x 8’ single, 8’ x 8’ pairs, 3 hr.)
ZHEM - Latching hardware
ZHLA - Windstorm rated assemblies

Stocked Product

No.	Size	Function	Finish
2100	36”, 48”	Exit Only	689
2100F	36”, 48”	Fire Exit Only	689

Yale

440F Series - Exit Device Trims

Features:

- Certified ANSI/BHMA A156.3, Grade 1.
- 440F rose trim for stock doors (161 Prep).
- Free-Wheeling trim resists vandalism and abuse.
- 1-3/4" (44mm) door standard.
- Cylinders included, accepts 6-pin cylindrical type cylinders.
- Finishes: 689
- "S" trim prefix - Lever trim accepting Schlage® standard cylinders. 6-pin only. (Example: S-AU446F)
- 2-year limited warranty.

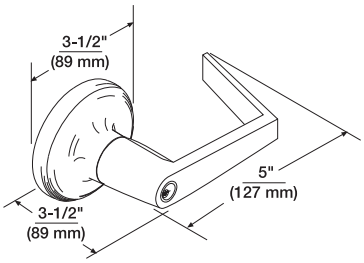

441F
Nightlatch
Access by Key

446F
Classroom
Cylinder Controls

ANSI Functions

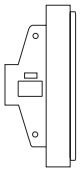

01
Exit Only, No Trim/Exit Only, Blank Plate

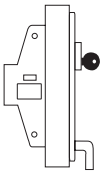

03
Key Retracts Latchbolts (NL)
441F2

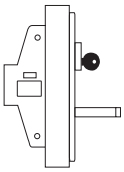

08
Entrance by Lever (Key Locks/Unlocks Lever)
446F2

Stocked Product

No.	Function	Finish
441F	Key Retracts Latchbolt	689
446F	Entrance by Lever	689

Zaca

Spacecab Regulus

STANDARD FRAME

Features

- Reversible, recessed mounting
- 6 Adjustable shelves included
- Float select (thin) and float plate (thick) mirror options

Stocked Product

Model	Mirror Type	Overall W x H	Wall Opening W x H x D	Finish
11-1-26-32	Float Select	16 x 26	14 x 24 x 3	Chrome

Spacecab Media

POLISHED EDGE

Features

- Reversible, recessed mounting
- 26” Cabinet includes 6 adjustable shelves

Stocked Product

Model	Mirror Type	Overall W x H	Wall Opening W x H x D	Finish
21-2-26-00	Float Plate	16 x 26	14 x 24 x 3	N/A

Zaca

Spacecab Nunki

BEVELED EDGE

Features

- Reversible, recessed mounting
- 26" Cabinet includes 6 adjustable shelves

Stocked Product

Model	Mirror Type	Overall W x H	Wall Opening W x H x D	Finish
22-2-26-00	Float Plate	16 x 26	14 x 24 x 3	N/A

Chromeo

VALUE PRICED CABINET

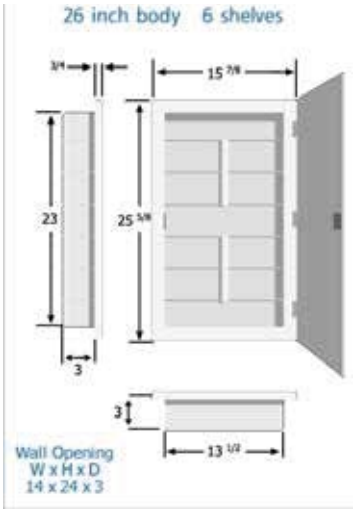

Features

- Unique patented storage system
- Fixed shelves
- Filed replaceable mirror door
- Reversible recess installation

Stocked Product

Model	Mirror Type	Overall W x H	Wall Opening W x H x D	Finish
61-1-26-32	Float Select	16 x 26	14 x 24 x 3	Chrome