STRADA II.
A VERSATILE CERAMIC RANGE WITH STYLISH, CONTEMPORARY CURVES.

Ideal STANDARD

OUR APPROACH

For decades, we've been serving architects, contractors, trade partners, and plumbers worldwide with high performance products like the rimless toilet or the ultra-flat shower tray. But the market has never been more demanding than it is today. Your clients and end-users are looking out for improved sustainability and advanced performance. They expect beautiful, lightweight design. We design with the demands of modern life in mind: pushing ourselves to achieve new levels of efficiency, offering elegant and impactful design. Meanwhile, our decades of experience have taught us that there's always a better, more intelligent solution. Which is why we never rest until we've found a way to offer you and your clients a higher standard of performance.

THE STRADA II RANGE

Building on the success of the original STRADA range, STRADA II features the softer angles, finer edges, and more contemporary curves that customers are increasingly looking for. It also sets new standards for design, efficiency, hygiene, ease of installation and maintenance. The STRADA II range of vessels, vanities, basins, toilets and bidets gives you greater flexibility in creating contemporary bathrooms for any project requiring a practical and premium solution.

THE RANGE RESTYLED

The new aesthetic of STRADA II retains the distinctive geometric shapes of the original STRADA, but with softer angles created by leading industrial designers Studio Levien. From basins to toilets and bidets, all the elements complement each other perfectly, so it's simpler to mix and match individual solutions within the range. Its vessels and vanities are also compatible with furniture from Ideal Standard's TONIC II, CONNECT AIR, TESI and ADAPTO ranges, which along with different finishes, offers countless options and even more flexibility for your design.

Whether you are renovating or developing a new project, STRADA II delivers the perfect combination of flexibility and functionality to design the bathroom that answers your clients' needs.

FEATURES

1. Soft, geometric design
2. AquaBlade® technology on all toilet models for superior hygiene
3. Invisible fixation maintains clean lines and elegance
4. Slim, easy take-off seats and covers for easier cleaning
5. Compatible furniture ranges to enhance bathroom design

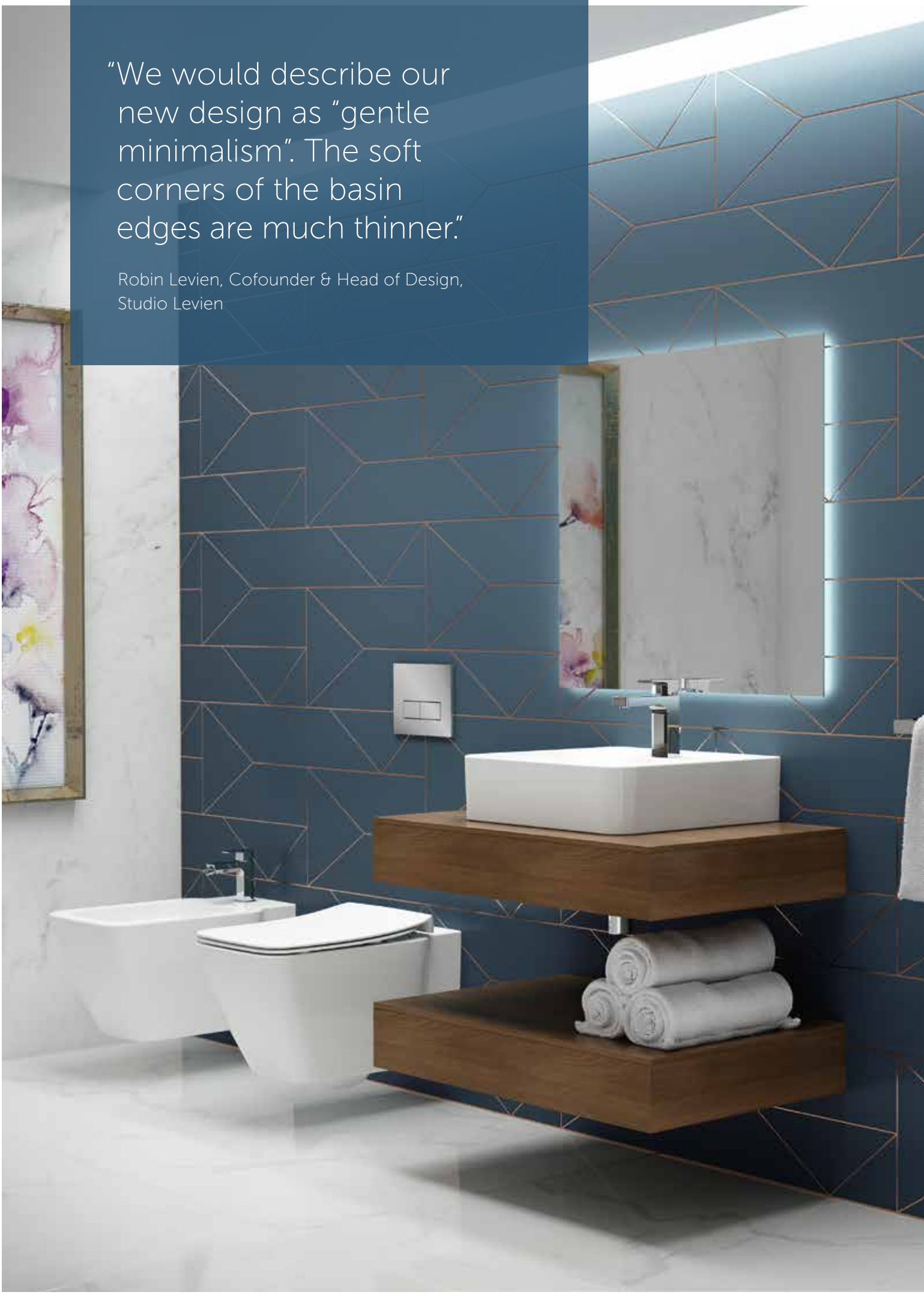

"We would describe our new design as "gentle minimalism". The soft corners of the basin edges are much thinner."

Robin Levien, Cofounder & Head of Design, Studio Levien

A WHOLE COLLECTION OF CURVES

To create a next-generation bathroom range that builds on the success of the original STRADA, we have drawn on the expertise of international industrial designers for STRADA II. Our collaboration with Studio Levien has led to softer geometric shapes with more contemporary curves to address today's aesthetic tastes. With STRADA II, your bathroom design is certain to be on trend.

STRADA II can enhance any specification, because the large variety of vessels, vanities, basins (with or without tap holes and overflows), toilets and bidets has been designed to allow you to flexibly combine elements and complementary furniture solutions.

THE MOST FLEXIBLE BASIN RANGE

STRADA II has basins to satisfy every design need. With vessels, vanities, under-counter, semi-countertop, and handrinse models available, the range is suitable for every type and size of project – even guest solutions.

Models are available in sizes ranging from 38cm to 120cm and can be specified with or without overflows and tap holes.

Ceramic waste cover is included, and a click-clack metal version is also available separately

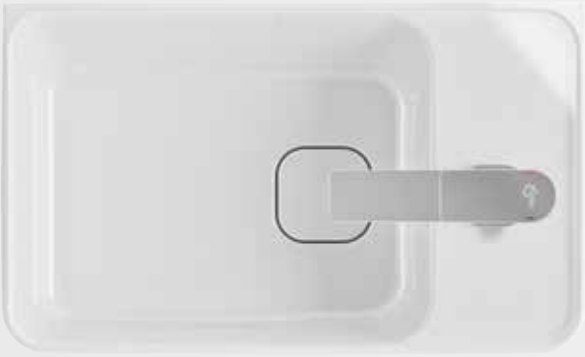

"I believe that our new version of STRADA maintains the essential simplicity but the softer, lighter design is what's required for years to come."

Robin Levien, Cofounder & Head of Design, Studio Levien

Elegant, thin rim for contemporary bathroom designs

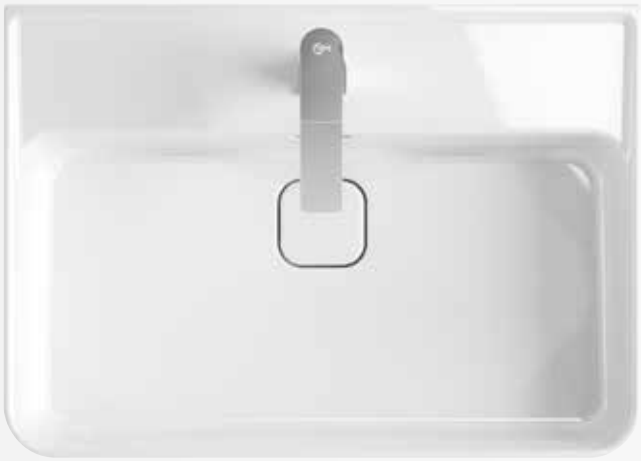

A number of models feature distinctive design elements such as a clever rim to help prevent objects falling from the deck

FLOWING WITH FUNCTIONALITY

All STRADA II toilet bowls are equipped with AquaBlade®. Launched in 2015, AquaBlade® is the patented Ideal Standard innovation for superior flushing, even at low water volumes.

100% OF SURFACE FLUSHED CLEAN

With a more intelligently designed and positioned channel and a smooth, gently curved surface, AquaBlade® cleans 100% of the inner bowl below the channel, outperforming all existing toilets to deliver the highest levels of hygiene and cleanliness.

PREVENTS SPLASHING. IMPROVES HYGIENE.

Lucideon, the independent materials development and commercialisation organisation, has independently tested Aquablade® against one of the bestselling rimless toilets in Europe. The results are: where 20% of splashes come from dirty bowl water for the rimless, Aquablade®'s optimised water pressure and smooth curves prevent all splashes from dirty bowl water.

EASIER TO KEEP CLEAN

AquaBlade®'s improved hygiene also considerably reduces the need for cleaning. Its perfect combination of elegant design and efficiency results in savings on time and cleaning materials.

LESS NOISE

Aquablade® is quieter too. Its flush has been proven to be 62% quieter than competitors' rimless bowl models and 25% quieter than a standard flush.

Aquablade® was tested by the independent materials development and commercialisation organisation Lucideon

* 8 pieces were tested for Ideal Standard by independent materials technology company Lucideon

100%
OF SURFACE BELOW CHANNEL CLEANED

UP TO
62%
QUIETER FLUSH THAN COMPETITORS

AquaBlade® TECHNOLOGY

LUCIDEON

CLEANER. QUIETER. SMARTER.

Every flush cleans more, with reduced noise, and less water

QUIETER

25% quieter compared to standard flush

CLEANER

100% of the inner bowl rinsed clean and unhygienic splashes prevented

SMARTER

Elegant design and efficiency for a lower cleaning time

BOWLS WITH BENEFITS

Whether wall-hung or back-to-wall models, bowls and bidets in the STRADA II range all feature ingenious invisible fixations. They maintain the clean aesthetic coolness of the bathroom. They're also designed for simple installation and make cleaning easier too, with no nooks or crannies where dust can collect.

STRADA II bowls are fitted with easy-to-take-off seats and covers, for normal and soft-close versions, which allow for quicker cleaning, leading to time and, therefore, cost savings.

MORE COMFORTABLE
The inner rim of the seat is more rounded for extra comfort

REMOVABLE SEATS AND COVERS
Simply unclip the seat to clean underneath

SOFT-CLOSE SEAT
The slim, attractive seat is silent and safe

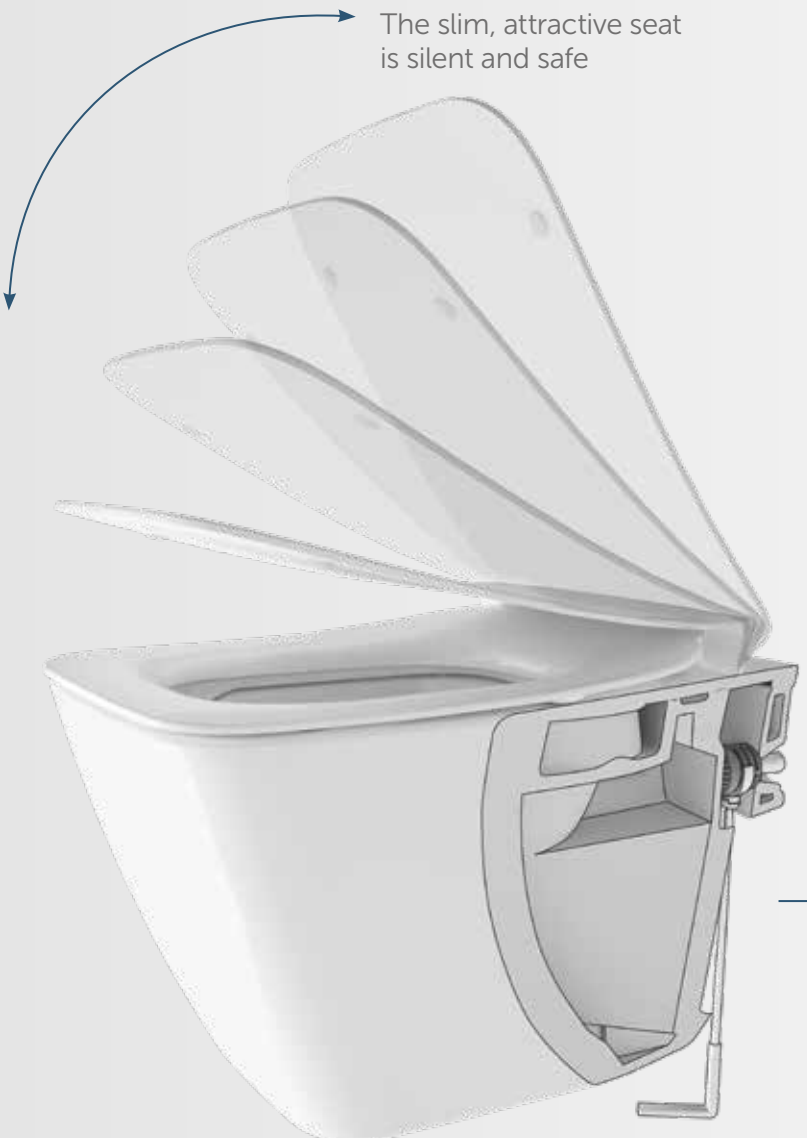

SAVE WATER
With dual flush 4.5/3.0 litre flushing

EASY CLEANING
Hidden fixations reduce the places where dirt can collect

CONNECT AIR furniture range

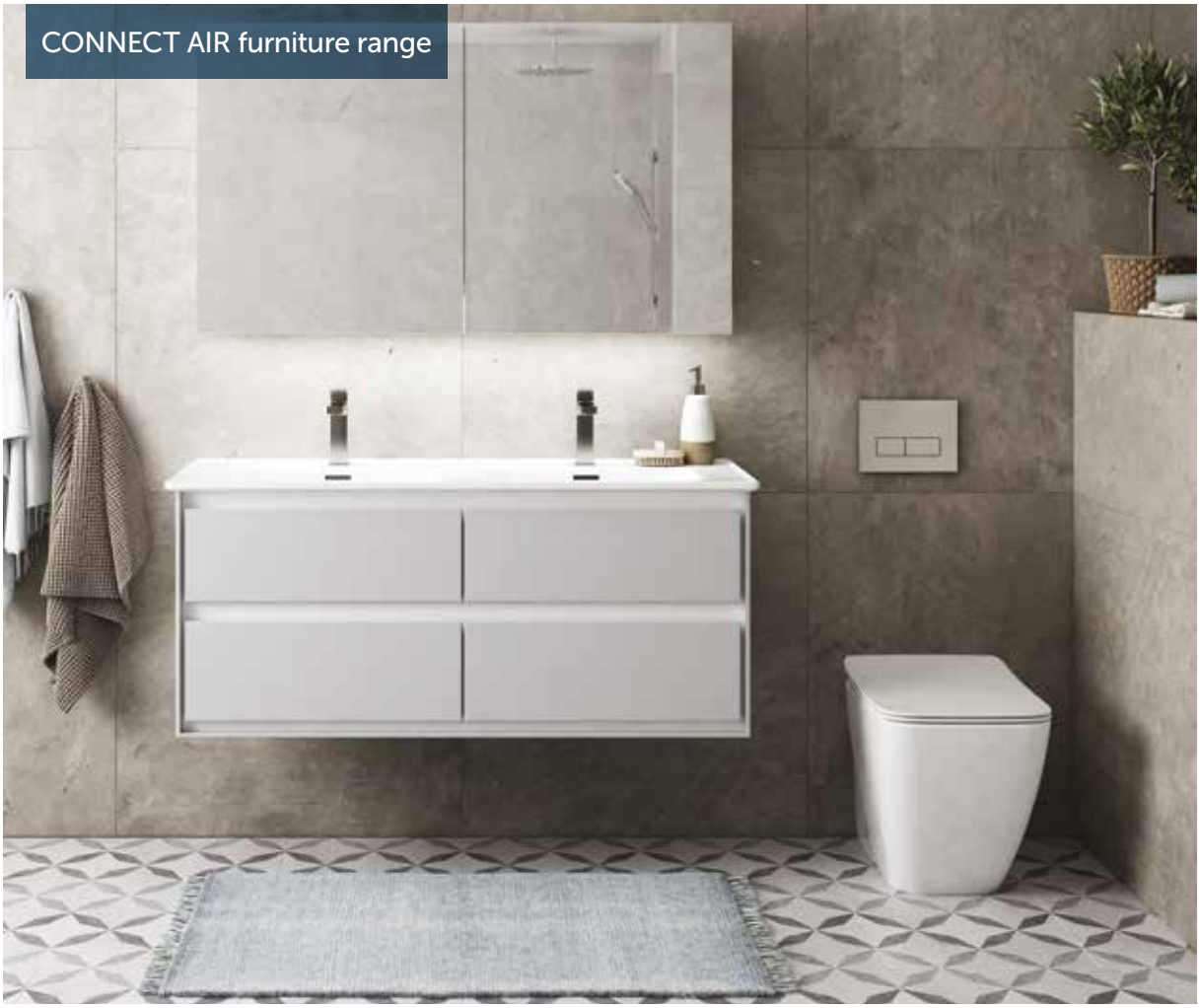

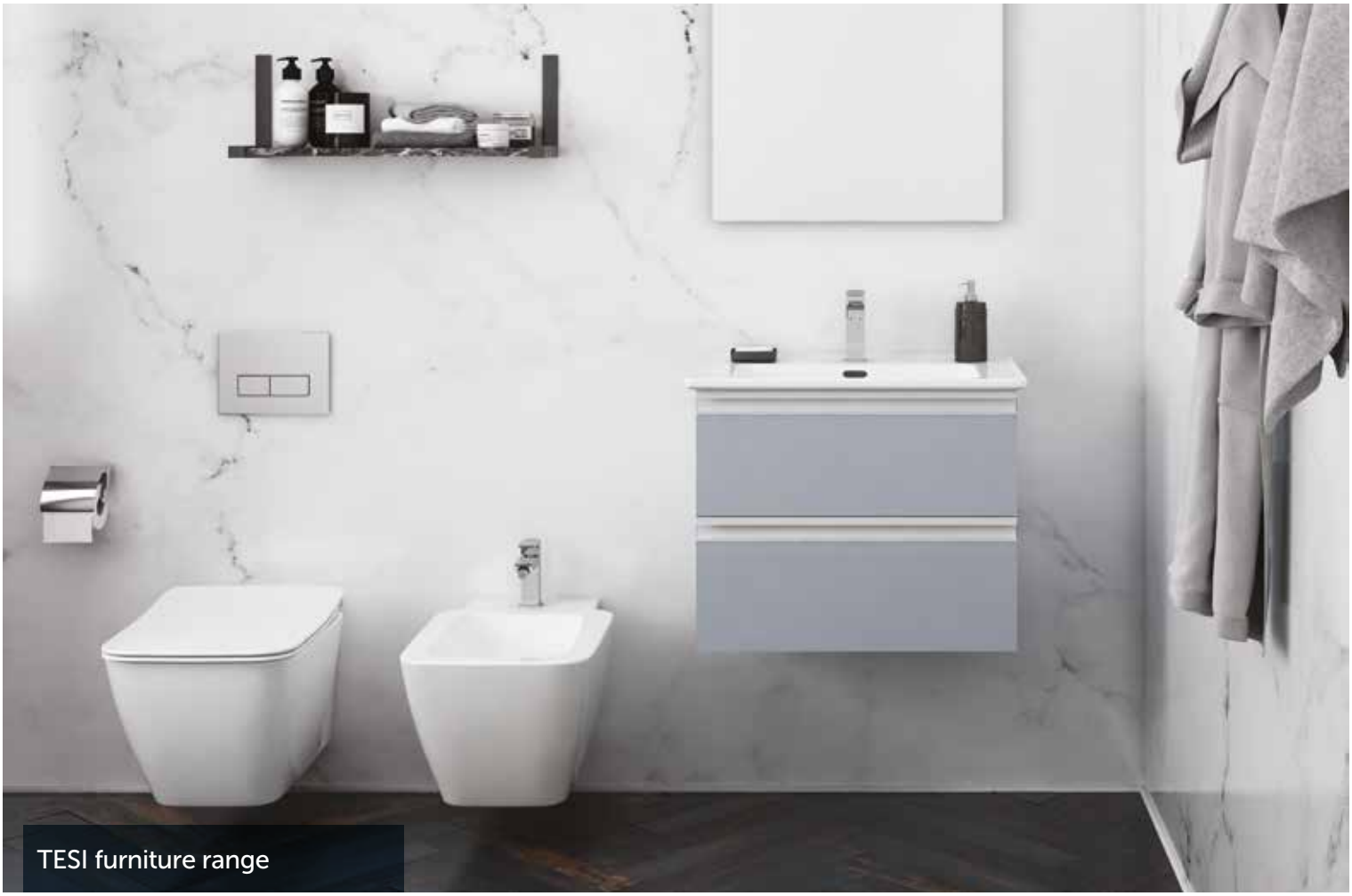

TESI furniture range

ADAPTO furniture range

TONIC II furniture range

A STYLE FOR ALL SPACES

STRADA II help you design bathrooms with practicality, elegance and flexibility.

STRADA II is compatible with many different Ideal Standard storage solutions including the TONIC II, CONNECT AIR, TESI and ADAPTO ranges. Each furniture range comes with a set of finishes to choose from such as glossy white, dark wood, light blue or glossy grey. Match the finish to the bathroom atmosphere you want to create.

BASIN UNITS

STRADA II compatible furniture echoes the cool lines of the basins and vessels while delivering storage space that declutters. For that extra touch of luxury, all models come with soft-close doors and drawers.

CABINETS

With a range of different heights, Ideal Standard cabinets allow for vertically increased storage rather than crowding the bathroom space with wider units. For flexibility, many of the cabinets are available with a choice of right or left-handed doors.

MIRRORS AND LIGHTS

Ideal Standard also has a range of mirrors, mirror cabinets and lights to complement Strada II, which can add an elegant finishing touch to your bathroom design.

- Light Glossy Grey
- Glossy White
- Light Wood
- Dark Wood
- Light Glossy Blue

Many other finishes available

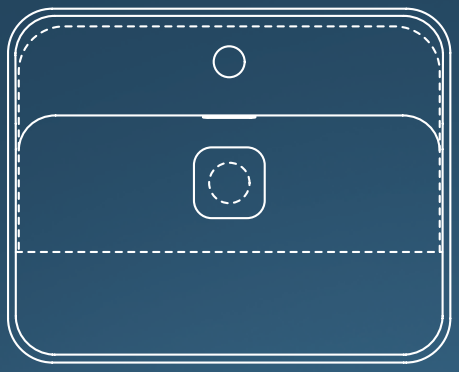

STRADA II

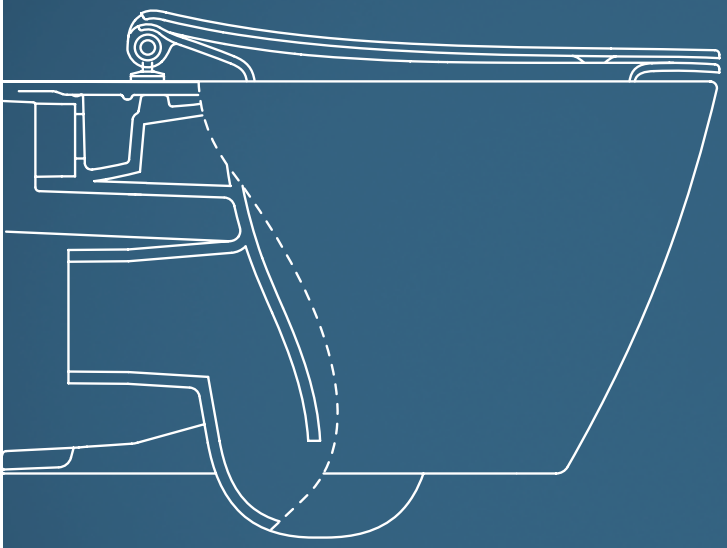

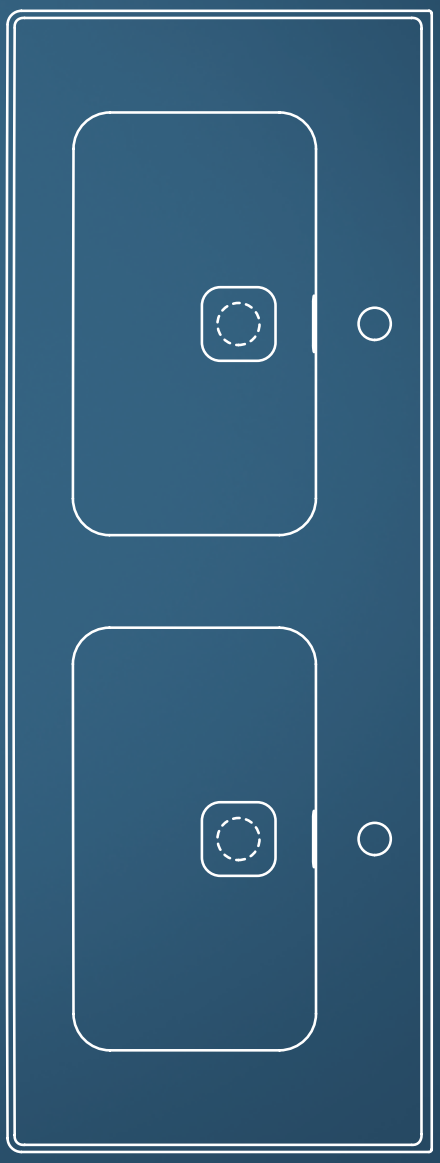

TECHNICAL SPECIFICATIONS

STRADA II VANITY
TECHNICAL SPECIFICATIONS

STRADA II VANITY 124CM

Model	Ref
Vanity	T300501

- Vanity with 2 overflows
- 2 tap holes
- Suitable for wall fixation
- Ceramic waste cover included
- Compatible with Connect Air double units 120cm, or Strada II semi-pedestal T299601

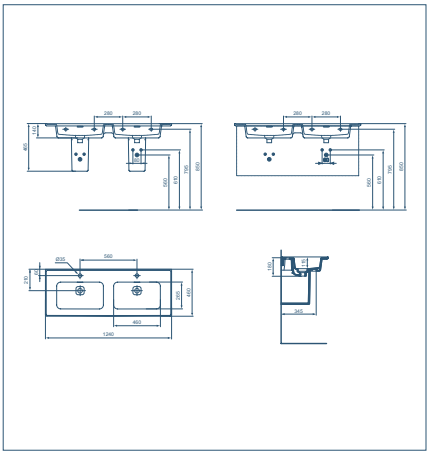

STRADA II VANITY 124CM

Model	Ref
Vanity	T363601

- Vanity with overflow
- No tap hole
- Suitable for wall fixation
- Ceramic waste cover included
- Compatible with Connect Air double units 120cm, or Strada II semi-pedestal T299601

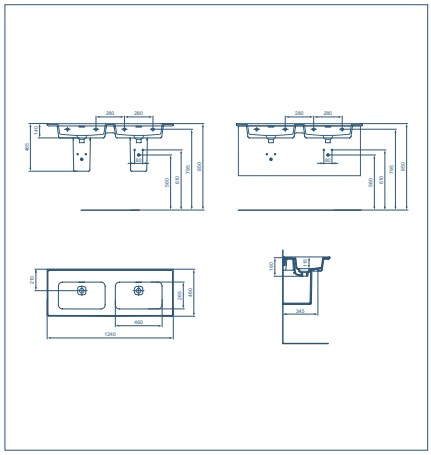

STRADA II VANITY 104CM

Model	Ref
Vanity	T300401

- Vanity with overflow
- 1 tap hole
- Suitable for wall fixation
- Ceramic waste cover included
- Compatible with Tesi, Connect Air and Tonic II 100cm basin units, or Strada II semi-pedestal T299601

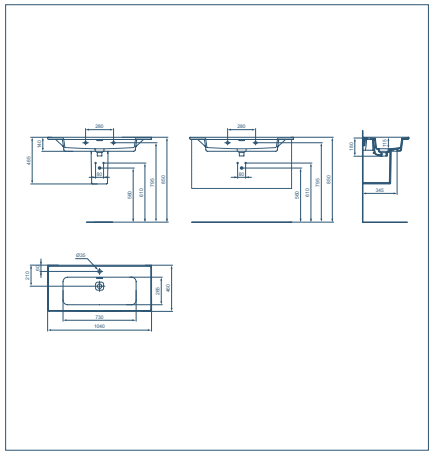

STRADA II VANITY 104CM

Model	Ref
Vanity	T363501

- Vanity with overflow
- No tap hole
- Suitable for wall fixation
- Ceramic waste cover included
- Compatible with Tesi, Connect Air and Tonic II 100cm basin units, or Strada II semi-pedestal T299601

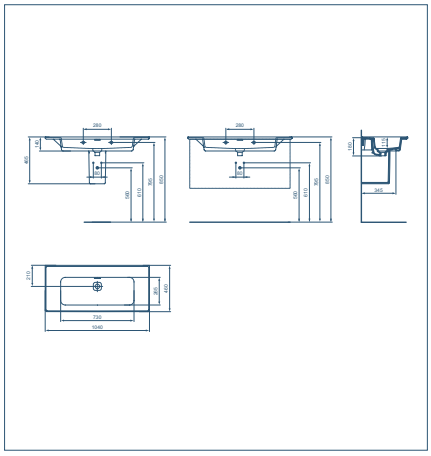

STRADA II VANITY 84CM

Model	Ref
Vanity	T300301

- Vanity with overflow
- 1 tap hole
- Suitable for wall fixation
- Ceramic waste cover included
- Compatible with Tesi, Connect Air and Tonic II 80cm basin units, or Strada II semi-pedestal T299601

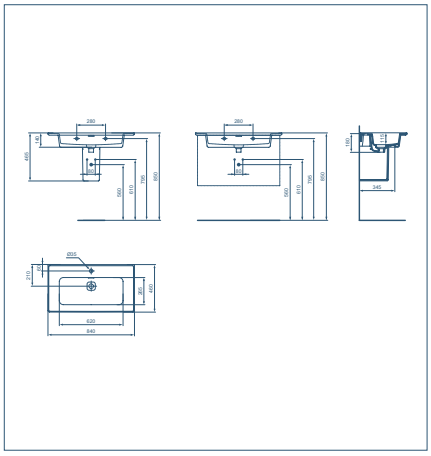

STRADA II VANITY 84CM

Model	Ref
Vanity	T363401

- Vanity with overflow
- No tap hole
- Suitable for wall fixation
- Ceramic waste cover included
- Compatible with Tesi, Connect Air and Tonic II 80cm basin units, or Strada II semi-pedestal T299601

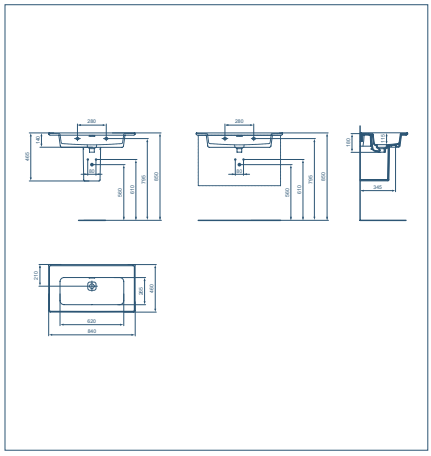

STRADA II VANITY
TECHNICAL SPECIFICATIONS

STRADA II VANITY 64CM

Model	Ref
Vanity	T299101

- Vanity with overflow
- 1 tap hole
- Suitable for wall fixation
- Ceramic waste cover included
- Compatible with Tesi, Connect Air and Tonic II 60cm basin units, or Strada II semi-pedestal T299601

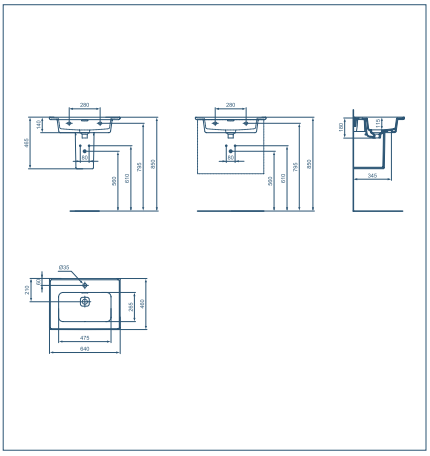

STRADA II VANITY 64CM

Model	Ref
Vanity	T363301

- Vanity with overflow
- No tap hole
- Suitable for wall fixation
- Ceramic waste cover included
- Compatible with Tesi, Connect Air and Tonic II 60cm basin units, or Strada II semi-pedestal T299601

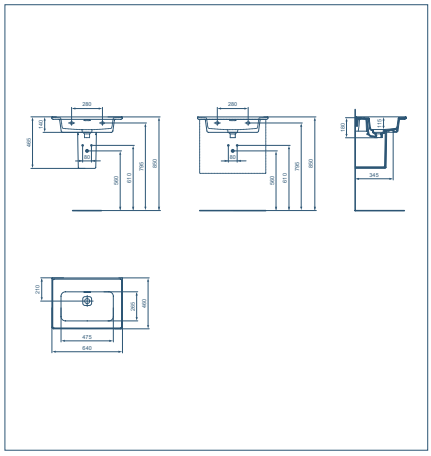

STRADA II VANITY 54CM

Model	Ref
Vanity	T298801

- Vanity with overflow
- 1 tap hole
- Suitable for wall fixation
- Ceramic waste cover included
- Compatible with Tesi 50cm basin units, or Strada II semi-pedestal T299601

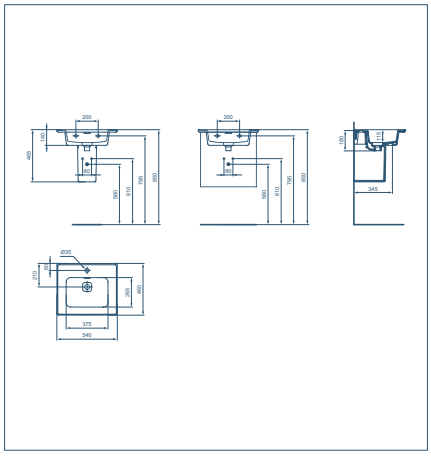

STRADA II VANITY 54CM

Model	Ref
Vanity	T363201

- Vanity with overflow
- No tap hole
- Suitable for wall fixation
- Ceramic waste cover included
- Compatible with Tesi 50cm basin units, or Strada II semi-pedestal T299601

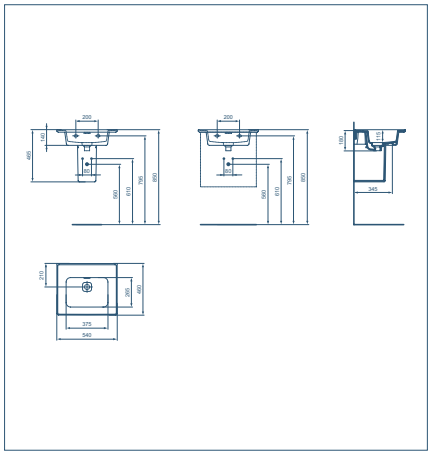

STRADA II VESSEL
TECHNICAL SPECIFICATIONS

STRADA II VESSEL 60X40CM

Model	Ref
Vessel	T299801

- Vessel with overflow
- 1 tap hole
- Ceramic waste cover included
- Compatible with Tesi, Connect Air, Tonic II and Adapto furniture

STRADA II VESSEL 60X40CM

Model	Ref
Vessel	T299901

- Vessel with overflow
- No tap hole
- Ceramic waste cover included
- Compatible with Tesi, Connect Air, Tonic II and Adapto furniture

STRADA II VESSEL 50X40CM

Model	Ref
Vessel	T296601

- Vessel with overflow
- 1 tap hole
- Ceramic waste cover included
- Compatible with Tesi, Connect Air, Tonic II and Adapto furniture

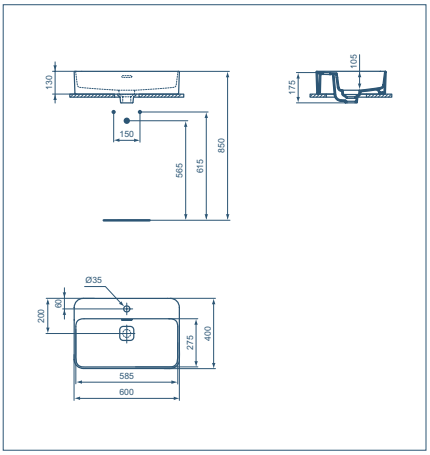

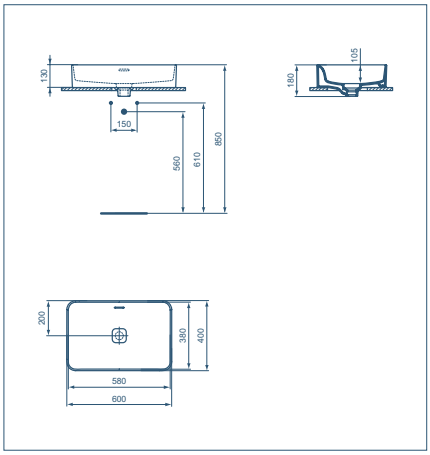

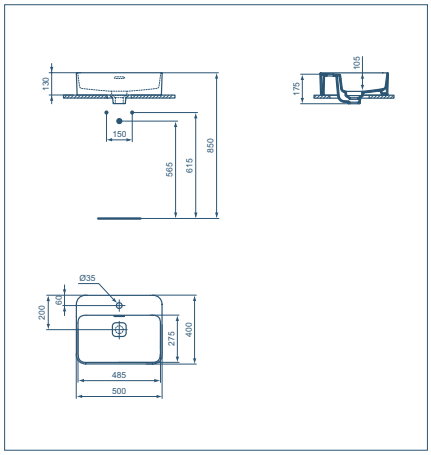

STRADA II VESSEL 50X40CM

Model	Ref
Vessel	T296701

- Vessel with no overflow
- No tap hole
- Ceramic waste cover included
- Compatible with Tesi, Connect Air, Tonic II and Adapto furniture

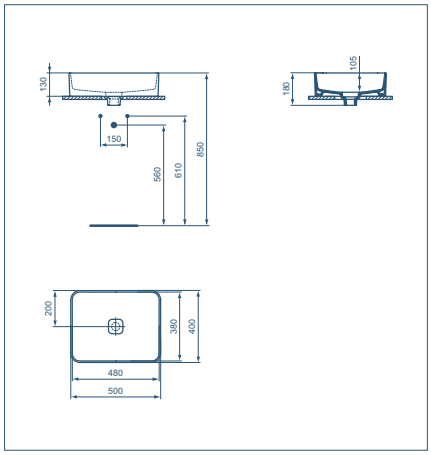

STRADA II VESSEL 50X40CM

Model	Ref
Vessel	T296501

- Vessel with overflow
- No tap hole
- Ceramic waste cover included
- Compatible with Tesi, Connect Air, Tonic II and Adapto furniture

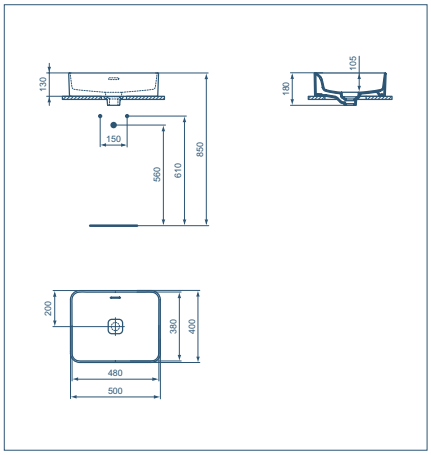

STRADA II VESSEL 50X35CM

Model	Ref
Vessel	T296401

- Vessel with overflow
- 1 tap hole
- Non-handed: installation on the left or right side
- Ceramic waste cover included
- Compatible with Tesi, Connect Air, Tonic II and Adapto furniture

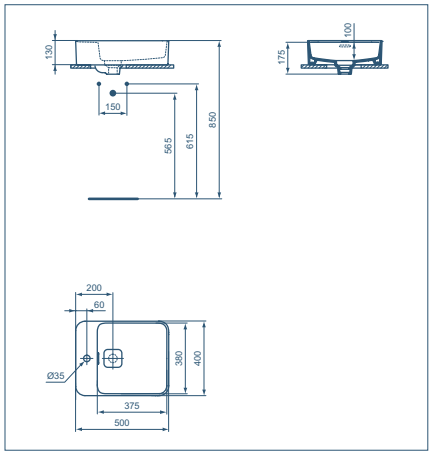

STRADA II VESSEL
TECHNICAL SPECIFICATIONS

STRADA II VESSEL 40CM

Model	Ref
Vessel	T296201

- Vessel with no overflow
- No tap hole
- Ceramic waste cover included
- Compatible with Tesi, Connect Air, Tonic II and Adapto furniture

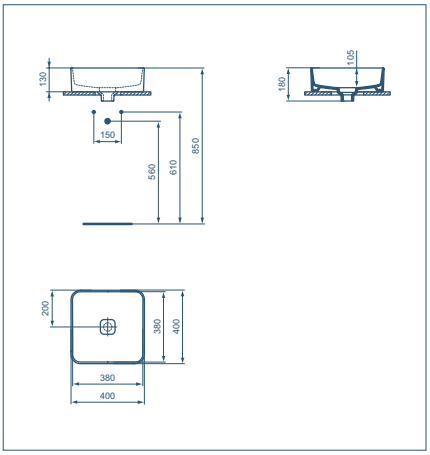

STRADA II VESSEL 40CM

Model	Ref
Vessel	T296301

- Vessel with overflow
- No tap hole
- Ceramic waste cover included
- Compatible with Tesi, Connect Air, Tonic II and Adapto furniture

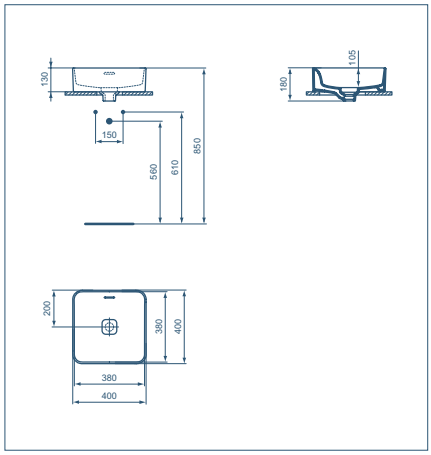

STRADA II VESSEL 75CM

Model	Ref
Vessel	T298001

- Vessel with no overflow
- No tap hole
- Ceramic waste cover included
- Compatible with Tesi, Connect Air, Tonic II and Adapto furniture

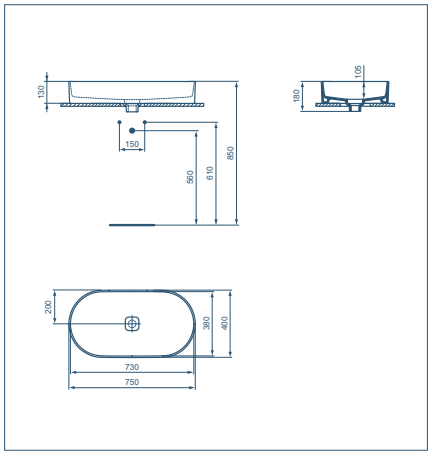

STRADA II VESSEL 60CM

Model	Ref
Vessel	T298101

- Vessel with no overflow
- No tap hole
- Ceramic waste cover included
- For combination with Tesi, Connect Air, Tonic II and Adapto furniture

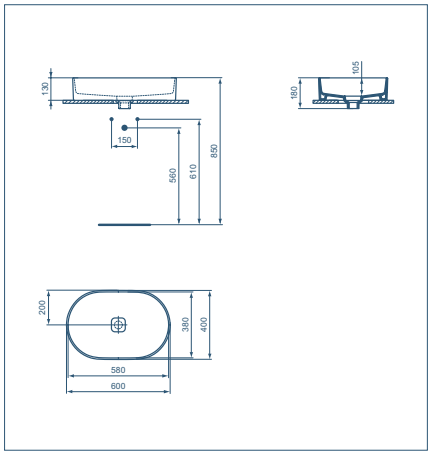

STRADA II VESSEL 60CM

Model	Ref
Vessel	T360401

- Vessel with overflow
- No tap hole
- Ceramic waste cover included
- Compatible with Tesi, Connect Air, Tonic II and Adapto furniture

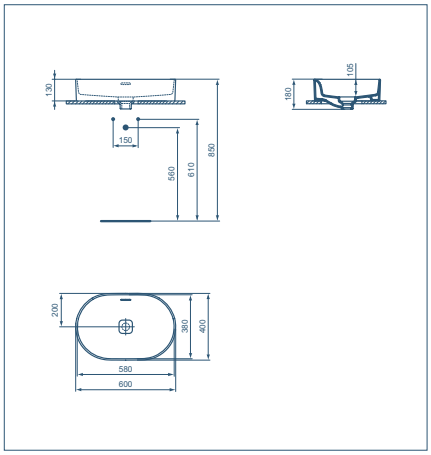

STRADA II VESSEL 45X45CM

Model	Ref
Vessel	T295901

- Vessel with no overflow
- No tap hole
- Ceramic waste cover included
- For combination with Tesi, Connect Air, Tonic II and Adapto furniture

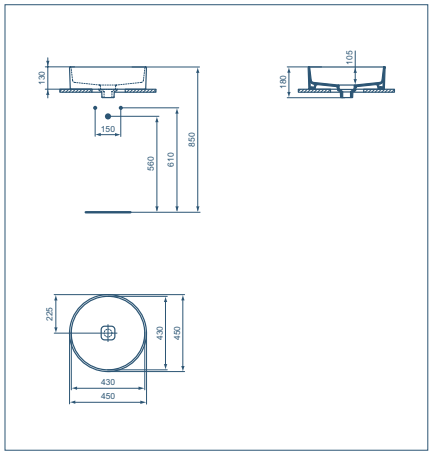

STRADA II VESSEL
TECHNICAL SPECIFICATIONS

STRADA II VESSEL 45X45CM

Model	Ref
Vessel	T296101

- Vessel with overflow
- No tap hole
- Ceramic waste cover included
- For combination with Tesi, Connect Air, Tonic II and Adapto furniture

STRADA II VESSEL 38X38CM

Model	Ref
Vessel	T292901

- Vessel with overflow
- No tap hole
- Small ceramic waste cover included
- For combination with Tesi, Connect Air, Tonic II and Adapto furniture

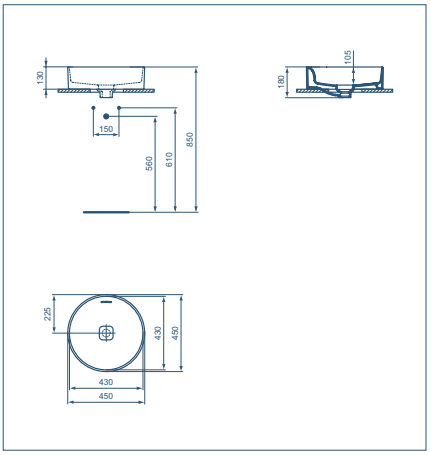

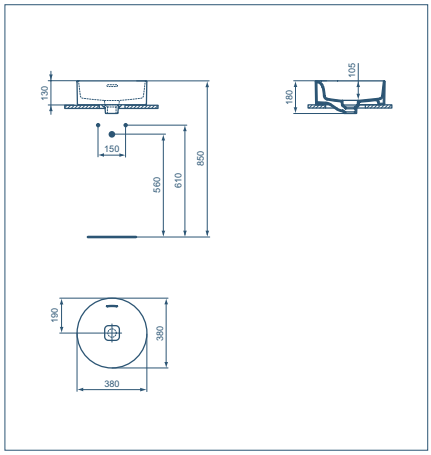

STRADA II BASIN
TECHNICAL SPECIFICATIONS

STRADA II BASIN 120CM

Model	Ref
Basin	T359501

- Basin with overflow
- 2 tap holes
- Suitable for wall fixation
- Ceramic waste cover included
- Compatible with semiped T299601

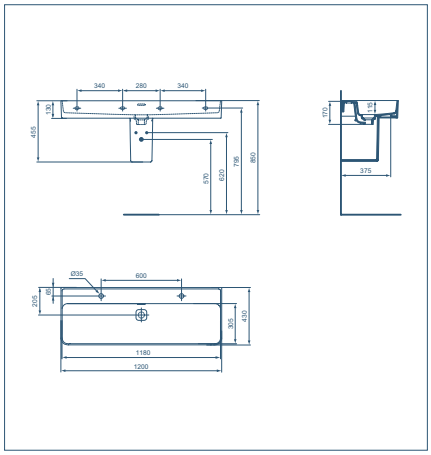

STRADA II BASIN 120CM

Model	Ref
Basin	T300601

- Basin with overflow
- 1 tap hole
- Suitable for wall fixation
- Ceramic waste cover included
- Compatible with semiped T299601

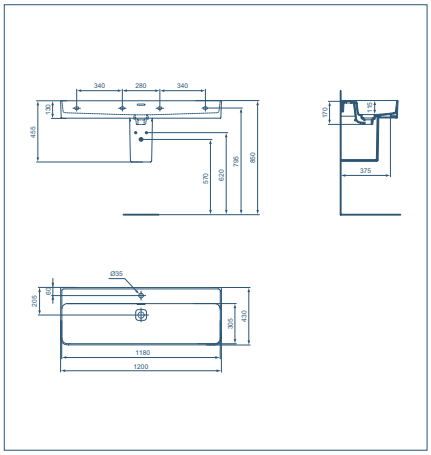

STRADA II BASIN 120CM

Model	Ref
Basin	T364101

- Basin with overflow
- No tap hole
- Suitable for wall fixation
- Ceramic waste cover included
- Compatible with semiped T299601

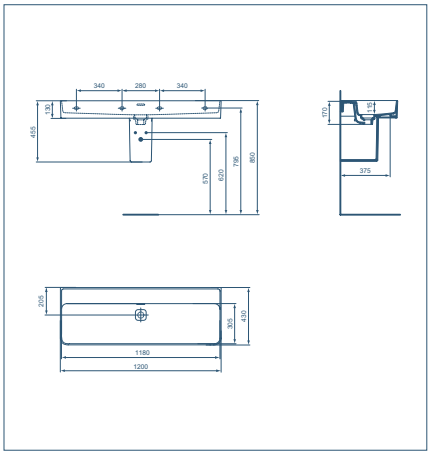

STRADA II BASIN

TECHNICAL SPECIFICATIONS

STRADA II BASIN 100CM

Model	Ref
Basin	T300201

- Basin with overflow
- 1 tap hole
- Suitable for wall fixation
- Ceramic waste cover included
- Compatible with semiped T299601

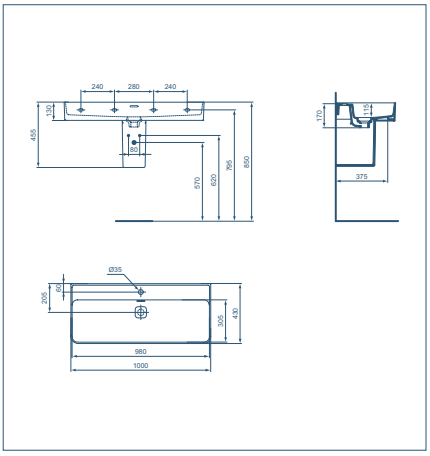

STRADA II BASIN 100CM

Model	Ref
Basin	T364001

- Basin with overflow
- No tap hole
- Suitable for wall fixation
- Ceramic waste cover included
- Compatible with semiped T299601

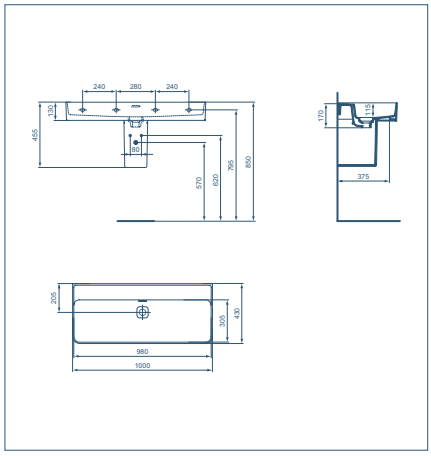

STRADA II BASIN 80CM

Model	Ref
Basin	T300101

- Basin with overflow
- 1 tap hole
- Suitable for wall fixation
- Ceramic waste cover included
- Compatible with semiped T299601

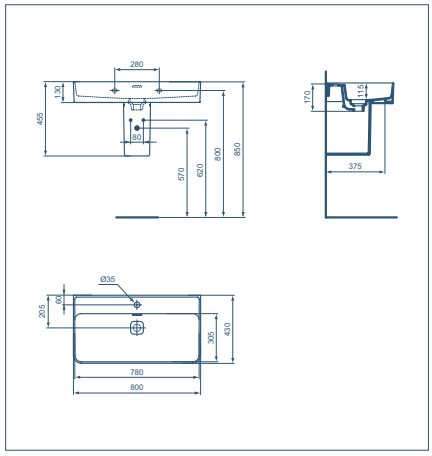

STRADA II BASIN 80CM

Model	Ref
Basin	T363901

- Basin with overflow
- No tap hole
- Suitable for wall fixation
- Ceramic waste cover included
- Compatible with semiped T299601

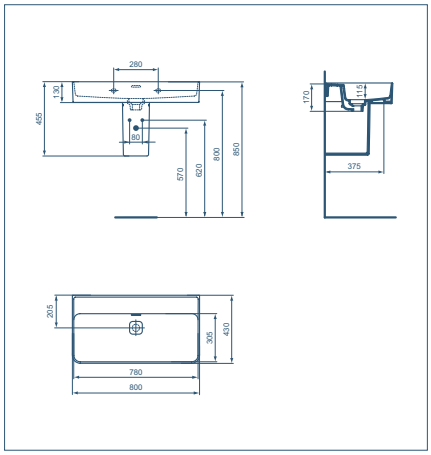

STRADA II BASIN 60CM

Model	Ref
Basin	T300001

- Basin with overflow
- 1 tap hole
- Suitable for wall fixation
- Ceramic waste cover included
- Compatible with semiped T299601

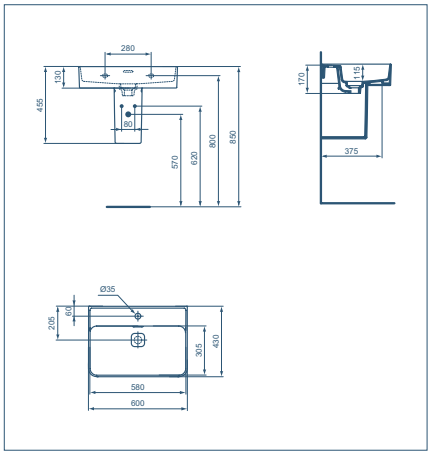

STRADA II BASIN 60CM

Model	Ref
Basin	T363801

- Basin with overflow
- No tap hole
- Suitable for wall fixation
- Ceramic waste cover included
- Compatible with semiped T299601

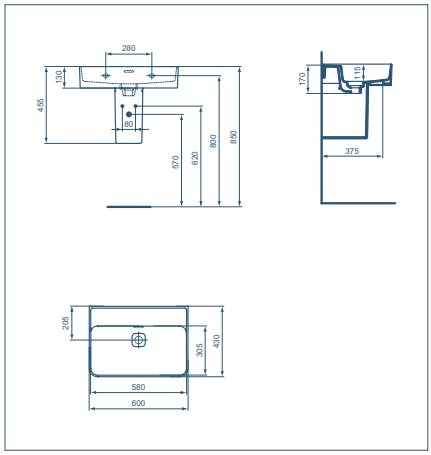

STRADA II BASIN
TECHNICAL SPECIFICATIONS

STRADA II BASIN 50CM

Model	Ref
Basin	T292801

- Basin with overflow
- 1 tap hole
- Ceramic waste cover included
- Suitable for wall fixation
- Compatible with semiped T299601

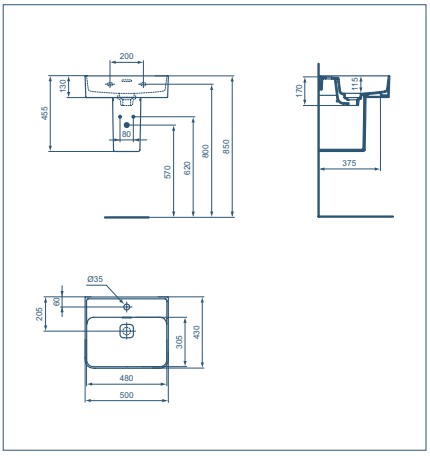

STRADA II BASIN 50CM

Model	Ref
Basin	T363701

- Basin with overflow
- No tap hole
- Ceramic waste cover included
- Suitable for wall fixation
- Compatible with semiped T299601

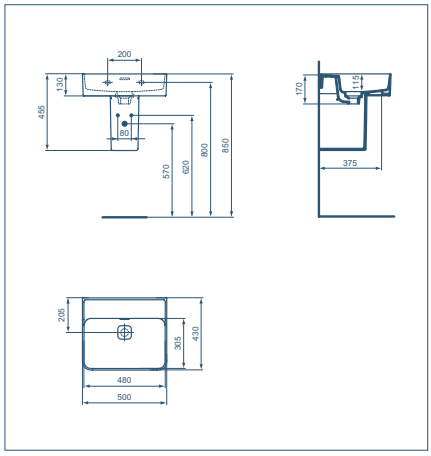

STRADA II HANDRINSE
TECHNICAL SPECIFICATIONS

STRADA II HANDRINSE BASIN 45CM – RIGHT-HANDED

Model	Ref
Handrinse	T299401

- Handrinse with overflow
- Right-handed
- 1 tap hole
- Ceramic waste cover included

STRADA II HANDRINSE BASIN 45CM – LEFT-HANDED

Model	Ref
Handrinse	T299501

- Handrinse with overflow
- Left-handed
- 1 tap hole
- Ceramic waste cover included

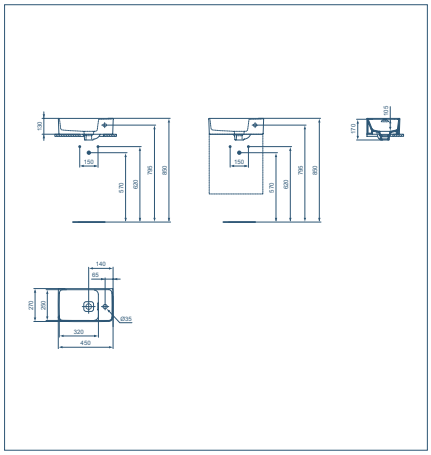

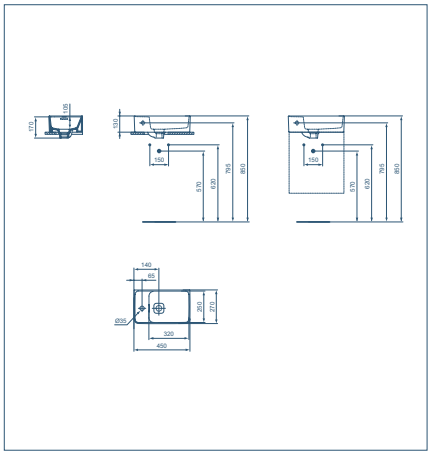

STRADA II COUNTERTOP

TECHNICAL SPECIFICATIONS

STRADA II UNDER-COUNTER-TOP BASIN 50X40CM

Model	Ref
Under-Pin Basin	T299201

- Underpin basin with overflow
- No tap hole
- Ceramic waste cover included
- Compatible with Adapto furniture

STRADA II SEMI-COUNTER-TOP BASIN 50X40CM

Model	Ref
Se/CTP Basin	T299301

- Counter-top basin with overflow
- 1 tap hole
- Ceramic waste cover included

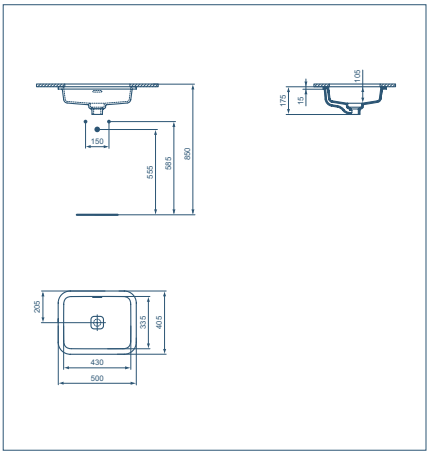

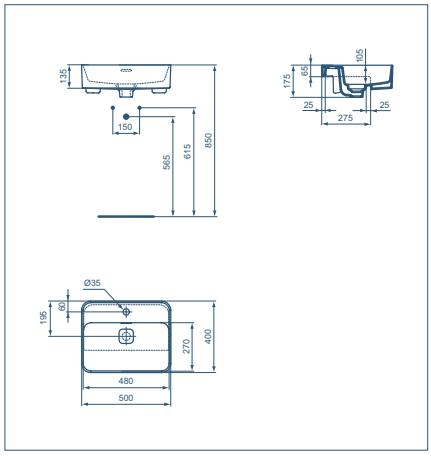

STRADA II TOILET
TECHNICAL SPECIFICATIONS

Dual flush 4.5/3l
AquaBlade
Slim seat
Invisible fixations
Soft-close seat
Easy take-off

STRADA II WALL-HUNG BOWL AQUABLADE

Model	Ref
Bowl	T299701

- AquaBlade technology
- Low flushing toilet (4,5/3 lt)
- Invisible fixations
- Wall-hung bowl
- Seat not included

STRADA II FLOORSTANDING BOWL AQUABLADE MULTI

Model	Ref
Bowl	T296801

- AquaBlade technology
- Low flushing toilet (4,5/3 lt)
- Invisible fixations
- Floorstanding bowl
- Seat not included

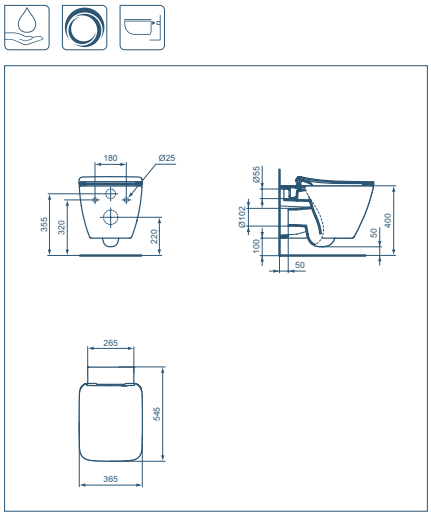

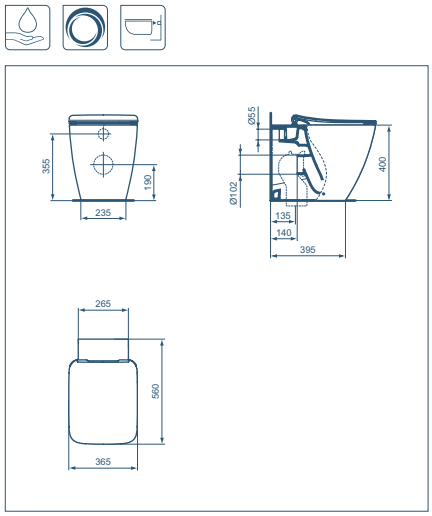

STRADA II SEAT
TECHNICAL SPECIFICATIONS

STRADA II SEAT & COVER NORMAL-CLOSE

Model	Ref
Seat & Cover	T360001

- Slim sandwich seat & cover
- Easy take-off hinges

STRADA II SEAT & COVER SOFT-CLOSE

Model	Ref
Seat & Cover	T360101

- Slim sandwich seat and cover
- Soft-close seat
- Easy take-off hinges

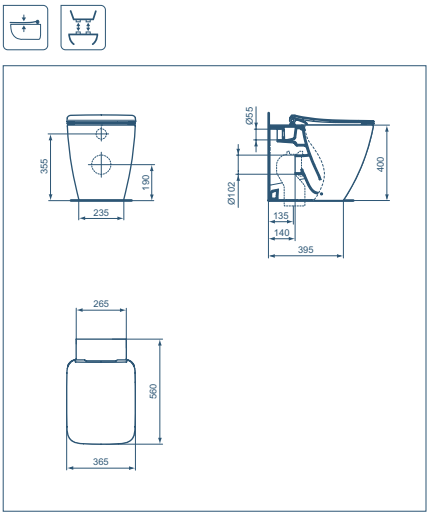

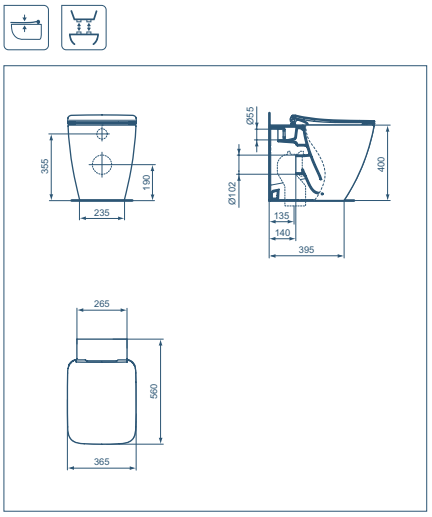

STRADA II BIDET
TECHNICAL SPECIFICATIONS

- Dual flush 4.5/3l
- AquaBlade
- Slim seat
- Invisible fixations
- Soft-close seat
- Easy take-off

STRADA II WALL-HUNG BIDET

Model	Ref
Bidet	T297101

- Wall-hung bidet with overflow
- 1 tap hole
- Invisible fixations
- Ceramic waste cover included

STRADA II FLOORSTANDING BIDET

Model	Ref
Bidet	T296901

- Floorstanding bidet with overflow
- 1 tap hole
- Invisible fixations
- Ceramic waste cover included

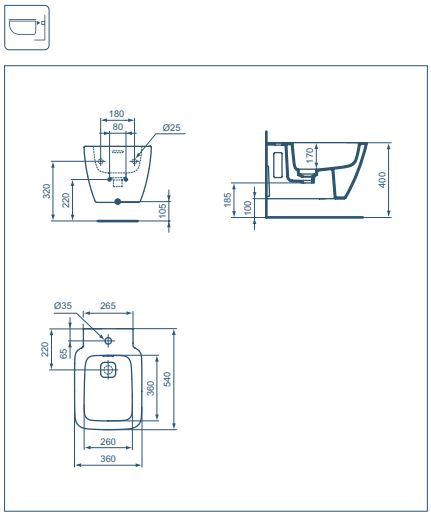

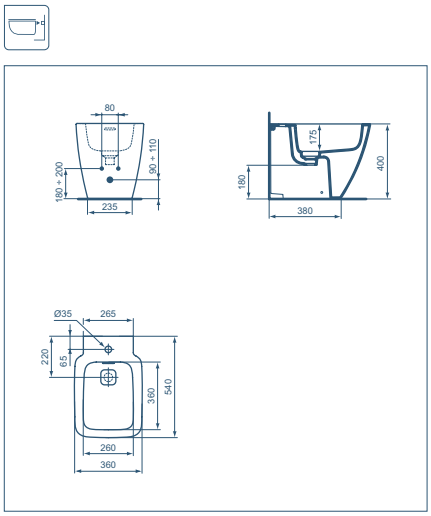

STRADA II WASTE
TECHNICAL SPECIFICATIONS

STRADA II CHROME WASTE COVER – CLICK-CLACK

Model	Ref
Waste	T3629AA

- Click-clack waste cover

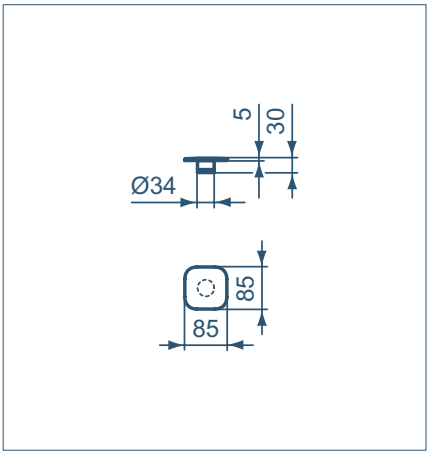

STRADA II CHROME WASTE COVER SMALL– CLICK-CLACK

Model	Ref
Waste	T3630AA

- Small click-clack waste cover

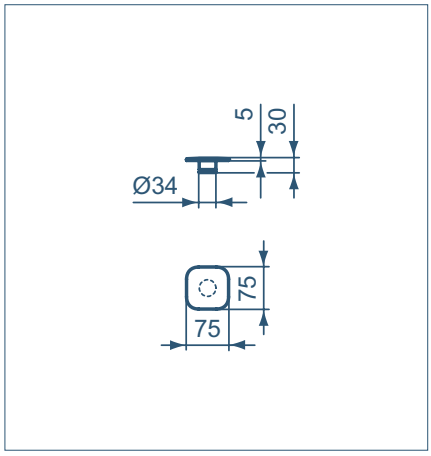

STRADA II WASTE
TECHNICAL SPECIFICATIONS

STRADA II CERAMIC WASTE COVER

Model	Ref
Waste	T854601

- Ceramic waste cover – to be used with pop-up waste and free waste

STRADA II CERAMIC WASTE COVER SMALL

Model	Ref
Waste	T360301

- Small ceramic waste cover – to be used with pop-up waste and free waste

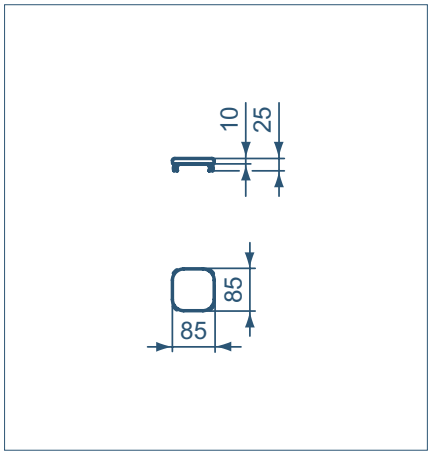

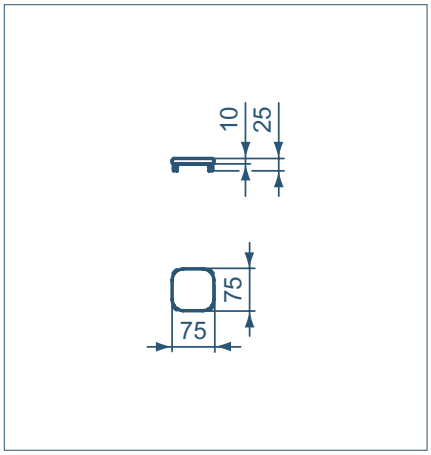

GUARANTEED TO SUCCEED

We appreciate that your reputation and your projects demand reliability from a partner and high-quality, guaranteed products and solutions. That's why all STRADA II ceramic solutions meet European Standard EN 14688 and come with a lifetime guarantee.

For further detail on norms, compliance, and guarantees, please visit **www.idealstandard.com**

CERAMIC
LIFETIME
GUARANTEE

EXPERTS IN CRAFTING BATHROOMS FOR OVER 100 YEARS

Ideal Standard Polska Sp. z o.o.
Ul. Ostrowskiego 7
53-238 Wroclaw, Polska

Tel: +48 71 78 68 301
Fax: +48 71 78 68 303
Infolinia: 0801 906 333

e-mail: dzialhandlowy@idealstandard.pl
www.idealstandard.pl

Ideal Standard