Tree Frogs®

Wooden Swing Set Factory

AMERICA'S BEST VALUE IN SWING SETS.

Tree Frogs®
Wooden Swing Set Factory

Tree Frogs swing sets is unmatched in value, from the best double-wall scoop slides in the swing set market to top-quality hardware and lumber. Tree Frogs swing sets are constructed with California Redwood and Western Red Cedar which come from certified mills that have sustained-yield forest management. Redwood and Cedar are both naturally resistant to insects and decay. These two quality woods have similar cell structure which allows them to be dimensionally stable (meaning, these types of woods are unlikely to warp or twist) and they hold finishes/stain and fasteners well. Tree Frogs wooden swing sets are packed with challenging features and fun play events which will give your children years of athletic confidence building; creative play; and imaginative play. Tree Frogs swings sets are built to last with a solid Lifetime Warranty to back them up.

Jaguar™ SERIES
by Tree Frogs

The Jaguar Series is a safe, fun, quality built swing set that is constructed with 100% natural premium Cedar which is resistant to insects and decay. The Jaguar Series lumber comes from certified mills that have sustainable forestry practices. They are designed for years of birthday parties; play dates; and backyard family fun. The goal of the Jaguar Series is to have the best-built swing set with abundant play features at an affordable budget-friendly price without sacrificing quality in lumber, slides, and hardware.

Come and see the Award-winning designs & WOW play factor at your local Tree Frogs showroom. Our friendly swing set specialists are ready and available every day of the week, including Saturdays & Sundays, when family projects seem to get the most attention.

We are "AMERICA'S BEST VALUE IN SWING SETS"™

100% OF THE REDWOOD USED IN TREE FROGS SWING SETS IS FROM SUSTAINABLE CALIFORNIA FORESTS

CALIFORNIA REDWOOD ASSOCIATION

WESTERN RED CEDAR LUMBER ASSOCIATION
REAL CEDAR
WRCLA

parent tested parent approved™
WINNER
www.ptpamedia.com

ASTM INTERNATIONAL
ORGANIZATIONAL MEMBER

IPEMA MEMBER
INTERNATIONAL PLAY EQUIPMENT MANUFACTURERS ASSOCIATION

2015 V-3

Design Your Dream Swing Set

STEP 1: Choose Playcenter or Fort Base

PLAYCENTER

UNIQUE FEATURES

- 360° Tire Swing
- 2 Climbing Ladders
- Super Flared Roof
- Rope Ladder
- Best Structure For Un-Level Yards

FORT

UNIQUE FEATURES

- Sandbox or Picnic Table Under Fort
- Ladder
- Rockwall Ladder
- Treehouse Panels
- Playhouse Panels

STEP 2: Choose Deck Height

5.0 DECK HEIGHT

5.4 DECK HEIGHT

6.4 DECK HEIGHT

7.4 DECK HEIGHT

STEP 3: Choose Configurations

Configuration 1

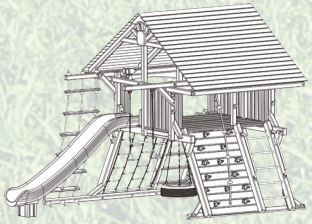

Base Playset with Slide

Configuration 2

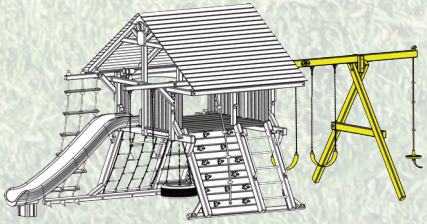

Add a Swing Beam

Configuration 3

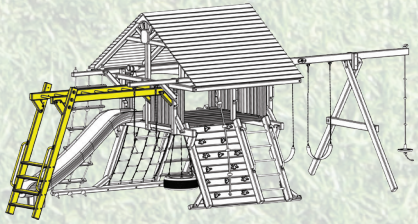

Add a Monkey Bar

Configuration 4

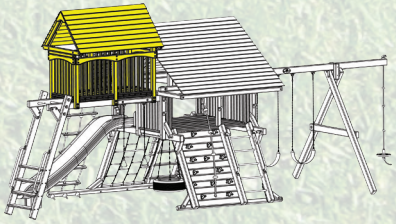

Add a Loft

Configuration 5

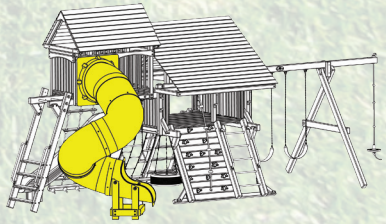

Add a Spiral Slide

A Solid Foundation of 100% Premium Cedar

Toucan & Parrot Island Fort & Playcenters

Economical - Offering More Play Value For Your Dollar
Expandable - Add Options As The Kids Grow
Exceptional Construction - Unmatched Quality For The Value

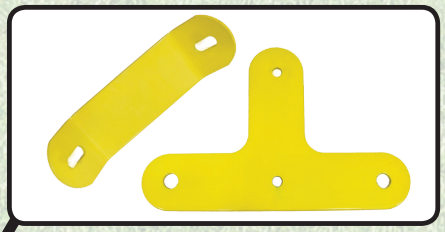

1/4" Thick Heavy Gauge Metal Brackets

Heavy Duty Hardware

Adjustable A-Frame Swing Legs

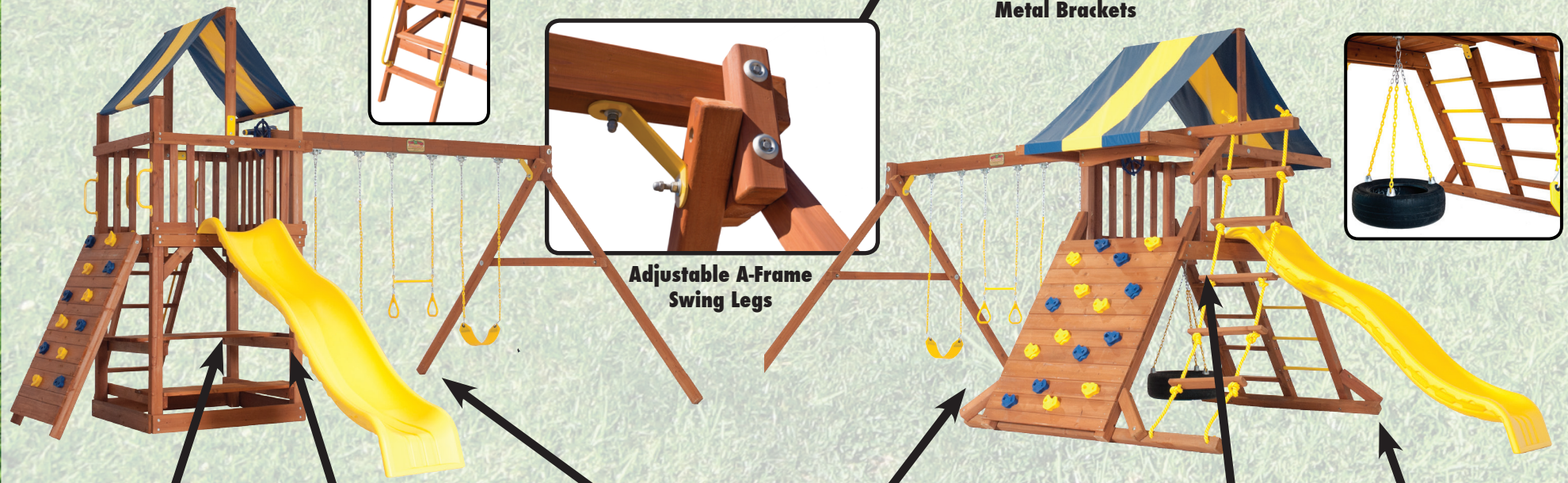

Ladder Bracket

Superior Supports

Spacious Decks

Dual Bolt Construction

Solid 4x4 Bracing

Naturally Rot Deterent & Free of Chemicals Preservers

Jaguar Fort & Playcenters

Massive Big Beam Construction
Modular - Able To Grow With Your Family
More Room For Kids To Grow Into
The Most Return On Your Family Fun Investment

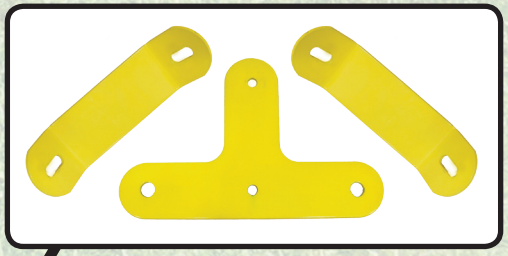

1/4" Thick Heavy Gauge Metal Brackets

Heavy Duty Hardware 1/2" Carriage Bolts & 3/8" Lag Bolts

Adjustable A-Frame Swing Legs

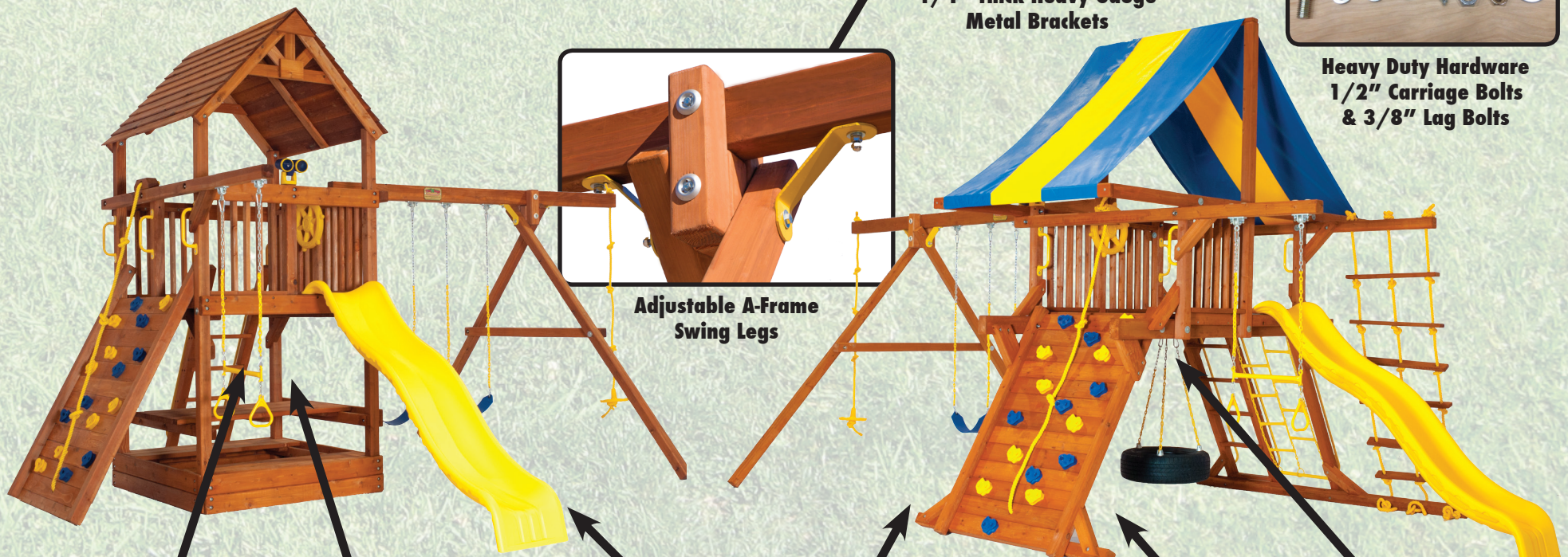

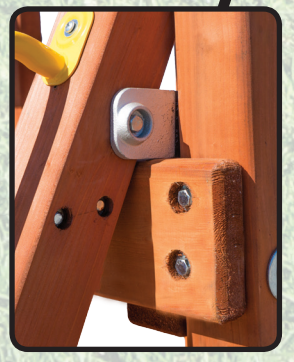

Ladder Safety Bracket

Solid Notched Brackets

Fastener Free Decks

Detailed Finish

Solid Notched Brackets

LEMUR FORT

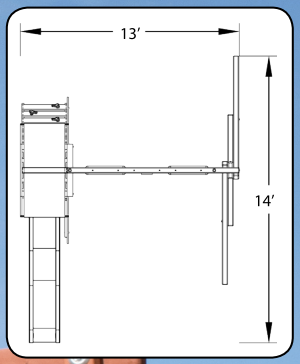

FEATURES:

- 9 Sq Ft Deck
- Tarp Roof
- 3 Pos. Inside Swing Beam
- Trapeze w/Rings
- Wave Slide
- Rockwall / Ladder Combo
- 2 Belt Swings
- Ship's Wheel

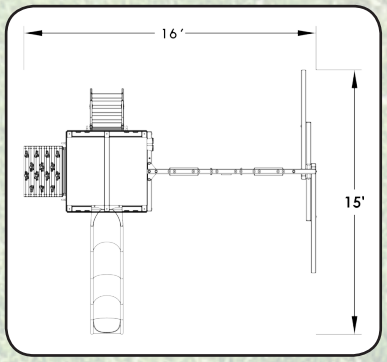

TOUCAN FORT

FEATURES:

- 14 Sq Ft Deck
- Tarp Roof
- Rockwall
- 2 Belt Swings
- 4 Safety Handles
- Picnic Table
- Dbl Wall Wave Slide
- Wooden Entry Ladder
- 3 Pos. Inside Swing Beam
- Trapeze w/Rings
- 2 Ladder Handles
- Ship's Wheel & Telescope

7.5 ft Swing Beam

52" Deck Ht

10ft Wave Slide

PARROT ISLAND FORT W/TARP

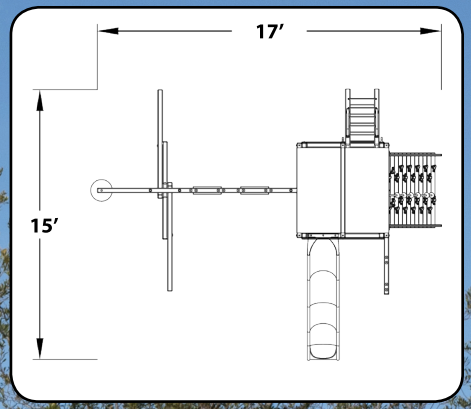

FEATURES:

- 20 Sq Ft Deck
- Wooden Entry Ladder
- 3 Pos. Swing Beam
- 4 Safety Handles
- Rope Swing w/Disc
- Dbl Wall Wave Slide
- Rockwall w/Rope
- 2 Belt Swings
- 2 Ladder Handles
- Telescope
- Tarp Roof
- Picnic Table
- Trapeze w/Rings
- Ship's Wheel

PARROT ISLAND FORT W/TREEHOUSE PANELS

7.5 ft Swing Beam

10ft Wave Slide

5.0ft Deck Ht

FEATURES:

- 20 Sq Ft Deck
- Wooden Entry Ladder
- Treehouse Panels
- 4 Safety Handles
- 3 Pos. Swing Beam
- Dbl Wall Wave Slide
- Rockwall w/Rope
- 2 Belt Swings
- 2 Ladder Handles
- Rope Swing w/Disc
- Wood Roof
- Picnic Table
- Trapeze w/Rings
- Tic Tac Toe Panel
- Ship's Wheel & Telescope

PARROT ISLAND FORT
W/LOFT TOWER & SPIRAL SLIDE

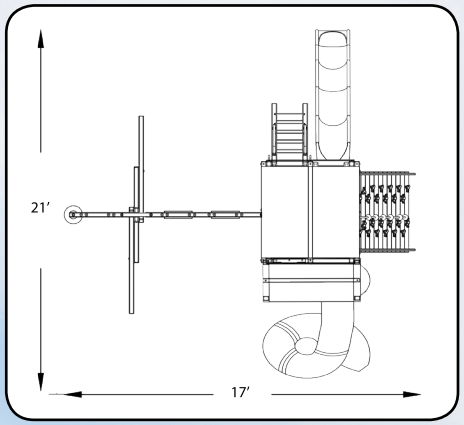

VISIT OUR WEBSITE AT WWW.TREEFROGSSWINGSETS.COM

PARROT ISLAND FORT
W/LOFT TOWER & SPIRAL SLIDE

FEATURES:

20 Sq Ft Deck	Dbl Wall Wave Slide
Tarp Roofs	16 Sq. Ft. Loft Deck
Wooden Entry Ladder	Rockwall w/Rope
Picnic Table	3 Pos. Swing Beam
2 Belt Swings	Trapeze w/Rings
2 Safety Handles	2 Ladder Handles
Loft Tower	Spiral Slide
Rope Swing w/Disc	Ship's Wheel & Telescope

PARROT ISLAND FORT
CONFIG 5

FEATURES:

20 Sq Ft Deck	Dbl Wall Wave Slide
Tarp Roofs	16 Sq. Ft. Loft Deck
Wooden Entry Ladder	Rockwall w/Rope
Picnic Table	3 Pos. Inside Swing Beam
2 Belt Swings	Trapeze w/Rings
4 Safety Handles	4 Ladder Handles
Loft Tower	Spiral Slide
Ship's Wheel	Telescope

5.0 JAGUAR FORT

FEATURES:

25 Sq Ft Deck
Dbl Wall Wave Slide
Wood Roof
Wooden Entry Ladder
Rockwall w/Rope
Picnic Table
Trapeze w/Rings
3 Pos. Swing Beam
2 Belt Swings
Rope Disk
5 Safety Handles
2 Ladder Handles
Ship's Wheel
Binoculars

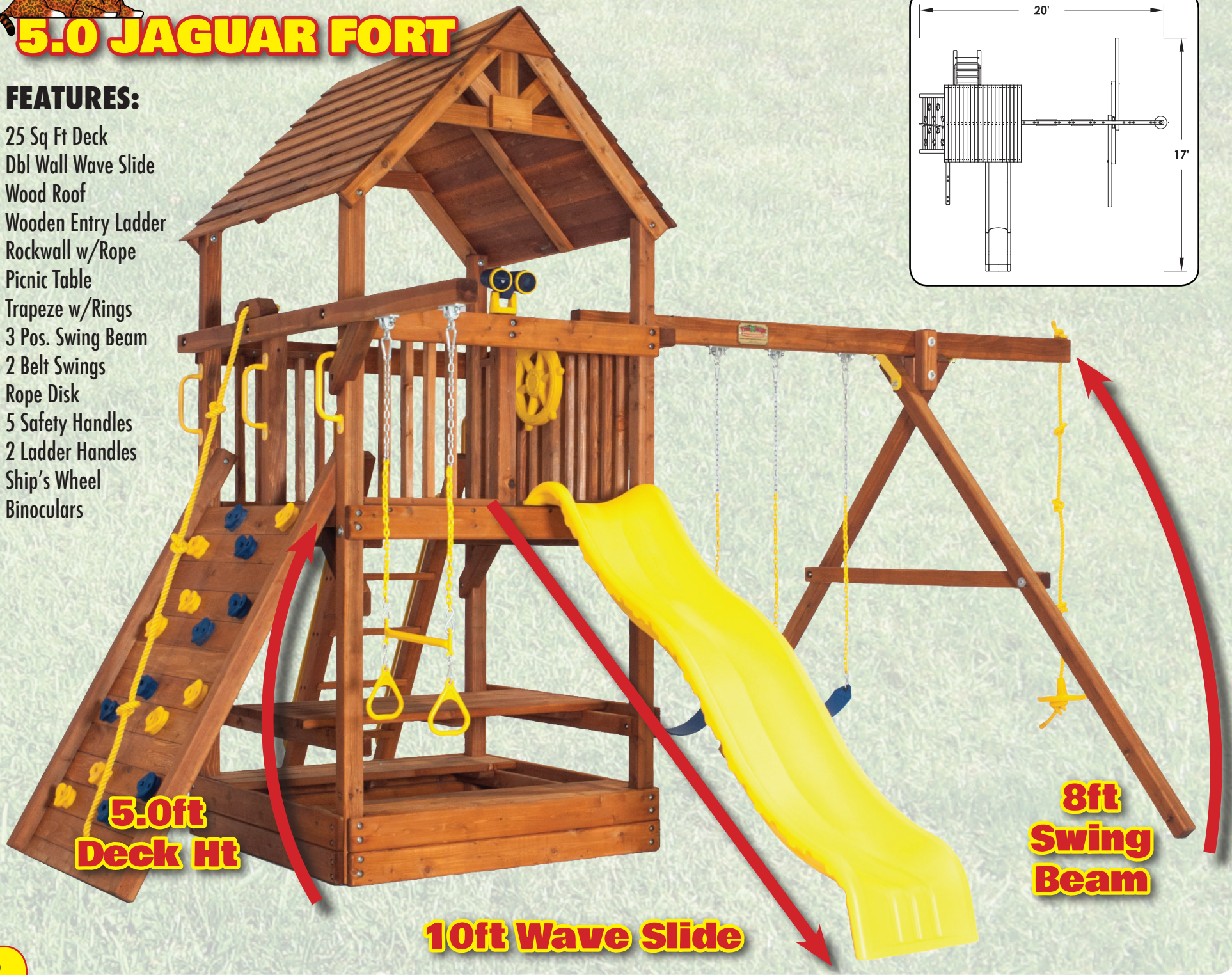

5.4 JAGUAR FORT

FEATURES:

- 25 Sq Ft Deck
- Dbl Wall Scoop Slide
- Wood Roof
- Wooden Entry Ladder
- Rockwall w/Rope
- Picnic Table
- Trapeze w/Rings
- 3 Pos. Swing Beam
- 2 Belt Swings
- Rope Disk
- 5 Safety Handles
- 2 Ladder Handles
- Ship's Wheel
- Binoculars

8.5ft Swing Beam

5.4ft Deck Ht

10ft DoubleWall Scoop Slide

5.4 JAGUAR FORT
CONFIG 5

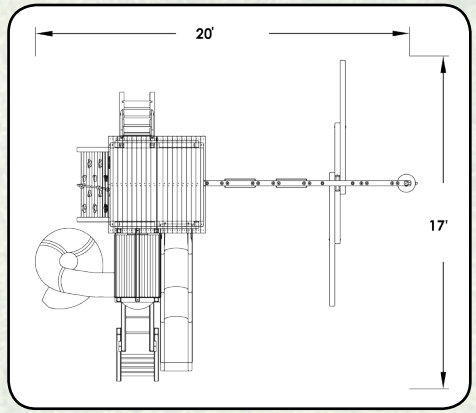

FEATURES:

25 Sq Ft Deck
16 Sq Ft Loft Deck
Dbl Wall Scoop Slide
Wood Roofs
Wooden Entry Ladder
Rockwall w/Rope
Picnic Table
Trapeze w/Rings
3 Pos. Swing Beam
2 Belt Swings
Rope Disk
5 Safety Handles
4 Ladder Handles
Monkey Bars
Bubble Panel
Dlx. Spiral Slide
Ship's Wheel
Telescope
Binoculars

TOUCAN PLAYCENTER

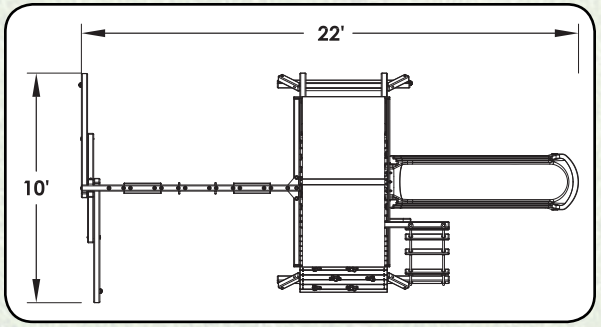

FEATURES:

- 18 Sq Ft Deck
- Dbl Wall Wave Slide
- Tarp Roof
- Rope Ladder
- Wood Step/Rung Combo Ladder
- Rockwall
- Tire Swing
- 3 Pos. Inside Swing Beam
- 2 Belt Swings
- Trapeze w/Rings
- 4 Safety Handles
- 3 Ladder Handles
- Ship's Wheel
- Telescope

PARROT ISLAND PLAYCENTER W/TARP

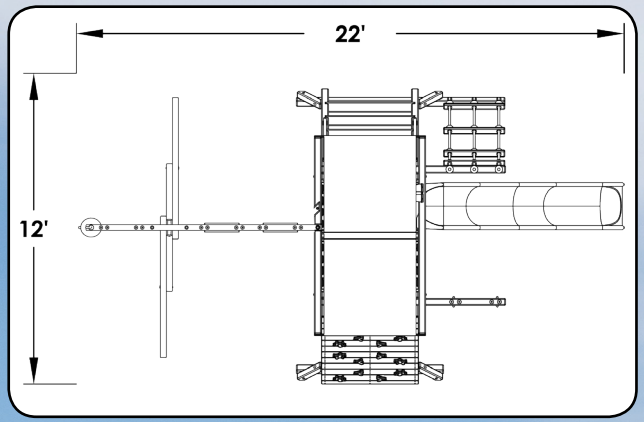

FEATURES:

- 24 Sq Ft Deck
- Wood Step/Rung Combo Ladder
- Tire Swing
- 2 Belt Swings
- 3 Ladder Handles
- Dbl Wall Wave Slide
- Rockwall w/Rope
- Trapeze w/Rings
- 3 Pos. Swing Beam
- Ship's Wheel
- Tarp Roof
- Rope Ladder
- Rope Swing w/Disc
- 4 Safety Handles
- Telescope

PARROT ISLAND PLAYCENTER

W/WOOD ROOF

FEATURES:

- 24 Sq Ft Deck
- Wood Step/Rung Combo Ladder
- Tire Swing
- Rope Swing w/Disc
- 3 Ladder Handles
- Dbl Wall Wave Slide
- Rockwall w/Rope
- Trapeze w/Rings
- 3 Pos. Swing Beam
- Ship's Wheel
- Wood Roof
- Rope Ladder
- 2 Belt Swings
- 4 Safety Handles
- Telescope

PARROT ISLAND PLAYCENTER
W/WOOD ROOF & TREEHOUSE PANELS

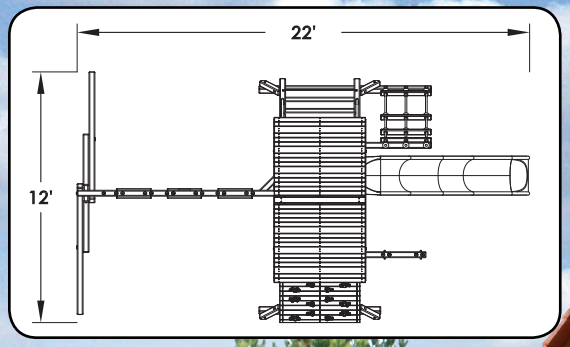

FEATURES:

- 24 Sq Ft Deck
- Wood Roofs
- Wooden Entry Ladder
- Trapeze w/Rings
- 2 Belt Swings
- 3 Ladder Handles
- Tire Swing
- Ship's Wheel
- Dbl Wall Wave Slide
- Treehouse Panels
- Rockwall w/Rope
- 3 Pos. Swing Beam
- 4 Safety Handles
- Tic Tac Toe Panel
- Rope Swing w/Disc
- Telescope

PARROT ISLAND PLAYCENTER
OCTOPUS

FEATURES:

24 Sq Ft Deck	Wave Slide
Wood Roofs	16 Sq Ft. Loft Deck
Wooden Entry Ladder	Rockwall w/Rope
3 Pos. Swing Beam	Rope Swing w/Disc
2 Belt Swings	Trapeze w/Rings
4 Safety Handles	3 Ladder Handles
Straight Tunnel Slide	Dbl Wall Scoop Slide
Spiral Slide	Ship's Wheel & Telescope

5.0 JAGUAR PLAYCENTER

FEATURES:

25 Sq Ft Deck
Dbl Wall Wave Slide
Tarp Roof
Wood Step/Chain Combo Ladder
Rockwall w/Rope
Rope Ladder
Trapeze w/Rings
Tire Swing
3 Pos. Swing Beam
2 Belt Swings
Rope Disk
4 Safety Handles
3 Ladder Handles
Ship's Wheel
Telescope

10ft Wave Slide

5.0ft Deck Ht

8ft Swing Beam

5.4 JAGUAR PLAYCENTER

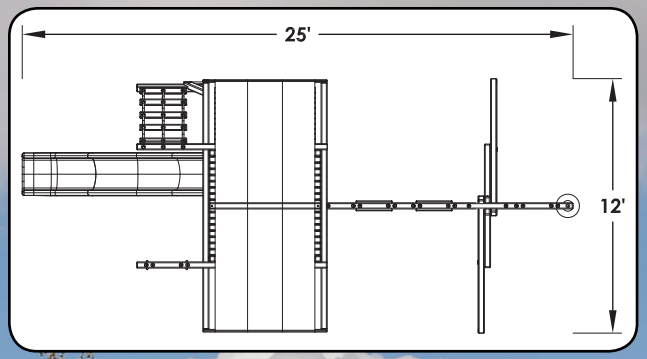

PERFECT FOR BIRTHDAYS!

8.5ft Swing Beam

5.4ft Deck Ht

10ft DoubleWall Scoop Slide

FEATURES:

- 25 Sq Ft Deck
- Wood Step/Chain Combo Ladder
- Rope Ladder
- 3 Pos. Swing Beam
- 4 Safety Handles
- Telescope
- Dbl Wall Scoop Slide
- Rockwall w/Rope
- Trapeze w/Rings
- 2 Belt Swings
- 3 Ladder Handles
- Tarp Roof
- Rope Ladder
- Tire Swing
- Rope w/Disk
- Ship's Wheel

5.4 JAGUAR PLAYCENTER CONFIG 5

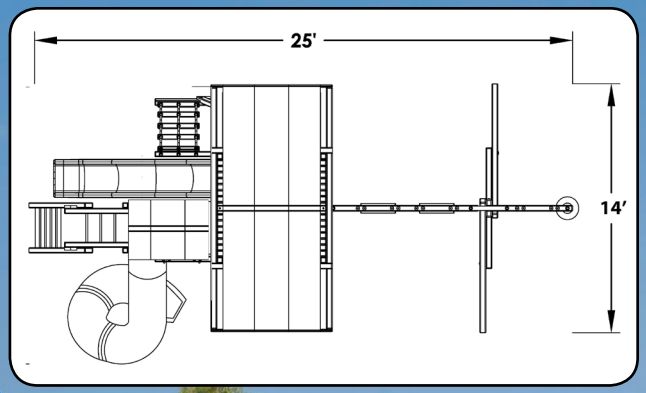

FEATURES:

- 25 Sq Ft Deck
- 16 Sq. Ft. Loft Deck
- Tire Swing
- Belt Swings
- Dlx. Spiral Slide
- Ship's Wheel
- Dbl Wall Scoop Slide
- Wood Step/Chain Combo Ladder
- Trapeze w/Rings
- Monkey Bars
- 4 Safety Handles
- Telescope
- Tarp Roofs
- Rockwall w/Rope
- 3 Pos. Swing Beam
- Loft w/Bubble Panel
- 5 Ladder Handles
- Binoculars

6.4 JAGUAR PLAYCENTER

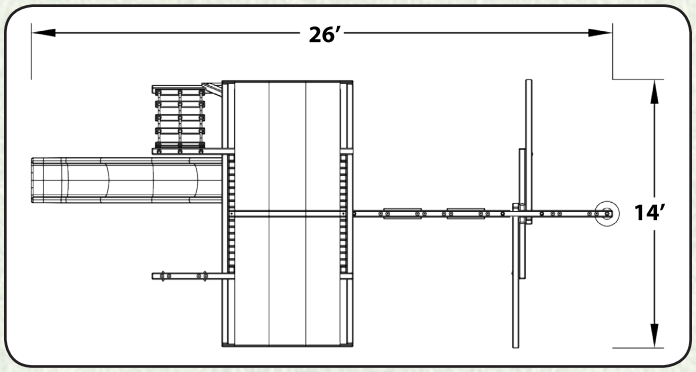

FEATURES:

25 Sq Ft Deck
Dbl Wall Scoop Slide
Tarp Roof
Wood Step/Chain Combo Ladder
Rockwall w/Rope
Rope Ladder
Trapeze w/Rings
Tire Swing
3 Pos. Swing Beam
2 Belt Swings
Rope w/Disk
2 Safety Handles
3 Ladder Handles
Ship's Wheel
Telescope

9.5FT SWING BEAM

6.4FT DECK HEIGHT

12FT DOUBLEWALL SCOOP SLIDE

6.4 JAGUAR PLAYCENTER
CONFIG 5

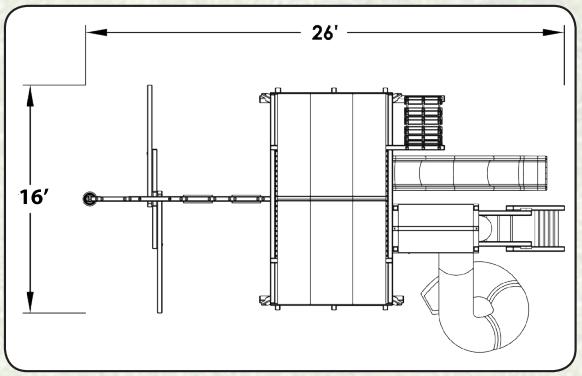

FEATURES:

- 25 Sq Ft Deck
- 16 Sq. Ft. Loft Deck
- Tire Swing
- Monkey Bars
- 5 Ladder Handles
- Dbl Wall Scoop Slide
- Rockwall w/Rope
- 3 Pos. Swing Beam
- 4 Safety Handles
- Ship's Wheel
- Tarp Roof
- Rope Ladder
- 2 Belt Swings
- Loft w/Bubble Panel
- Telescope
- Wood Step/Chain Combo Ladder
- Trapeze w/Rings
- Rope Disk
- Dlx Spiral Slide
- Binoculars

7.4 JAGUAR PLAYCENTER

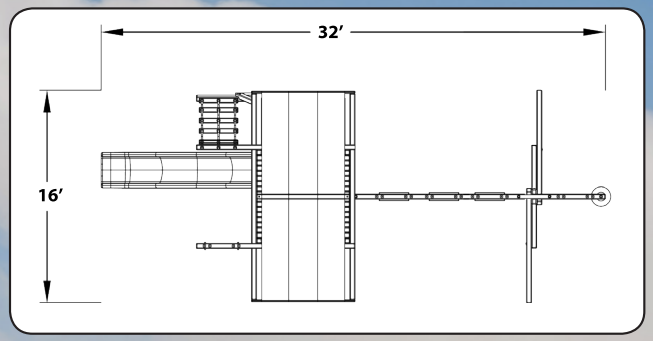

FEATURES:

- 25 Sq Ft Deck
- Dbl Wall Scoop Slide
- Tarp Roof
- Wood Step/Chain Combo Ladder
- Rockwall w/Rope
- Rope Ladder
- Trapeze w/Rings
- Tire Swing
- 4 Pos. Swing Beam
- 3 Belt Swings
- Rope w/Disk
- 4 Safety Handles
- 3 Ladder Handle
- Ship's Wheel
- Telescope

10.5 ft Swing Beam

7.4 ft Deck Ht

14ft Double Wall Scoop Slide

7.4 JAGUAR PLAYCENTER
CONFIG 5

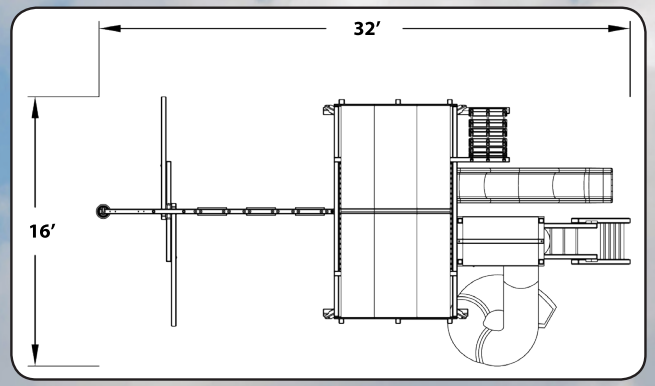

FEATURES:

- 25 Sq Ft Deck
- 24 Sq. Ft. Mega Loft Deck
- Rope Ladder
- 4 Pos. Swing Beam
- Loft w/Bubble Panel
- 5 Ladder Handles
- Binoculars
- Dbl Wall Scoop Slide
- Wood Step/Chain Combo Ladder
- Tire Swing
- 3 Belt Swings
- Dlx. Spiral Slide
- Ship's Wheel
- Rope Swing w/Disc
- Tarp Roofs
- Rockwall w/Rope
- Trapeze w/Rings
- Monkey Bars
- 4 Safety Handles
- Telescope

TREE FROGS JAGUAR PARTS & ACCESSORIES

Solid Rail Panel

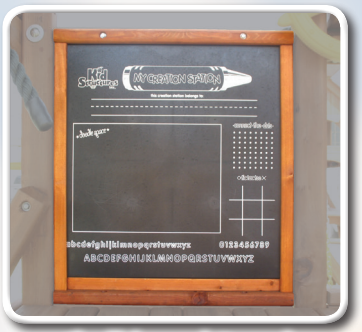
Chalkboard Panel

Bubble Panel

Tic-Tac-Toe Panel

Treehouse Panels for Playcenter

Binoculars

Sandbox Cover

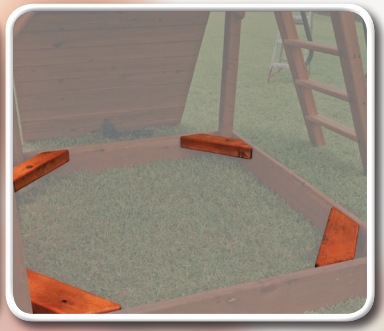
Sandbox Seats

Belt Swings

Rocks for Rockwall

Tire Swing - Vertical

Tire Swing - Horizontal

Glider Swing

Ductile Hangers w/Clips

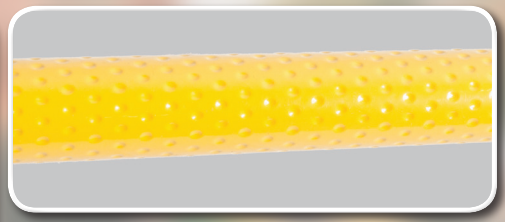
New Exclusive PlayGrip™ Climbing Rungs

New Exclusive PlayGrip™ Safety Handles

Rope Swing w/Disc

Trapeze with Rings

Full Toddler Bucket

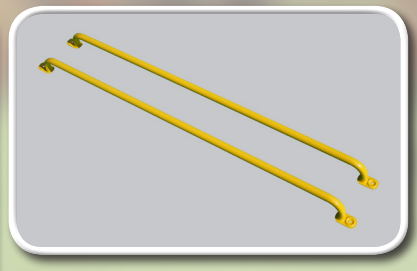
New Exclusive PlayGrip™ Ladder Handles

19 inch Ship's Wheel

Telescope

A Solid Foundation of 100% Redwood & Western Red Cedar Naturally Rot Deterent & Free of Chemical Preservers

- Massive Big Beam Construction
- Modular - Able To Grow With Your Family
- More Room For Kids To Grow Into
- The Most Return On Your Family Fun Investment

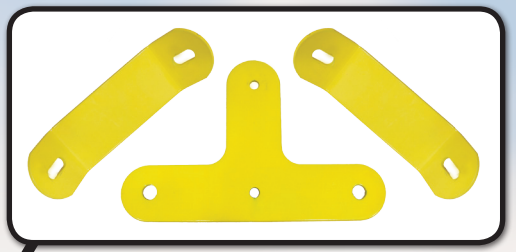

1/4" Thick Heavy Gauge Metal Brackets

Heavy Duty Hardware 1/2" Carriage Bolts & 3/8" Lag Bolts

Adjustable A-Frame Swing Legs

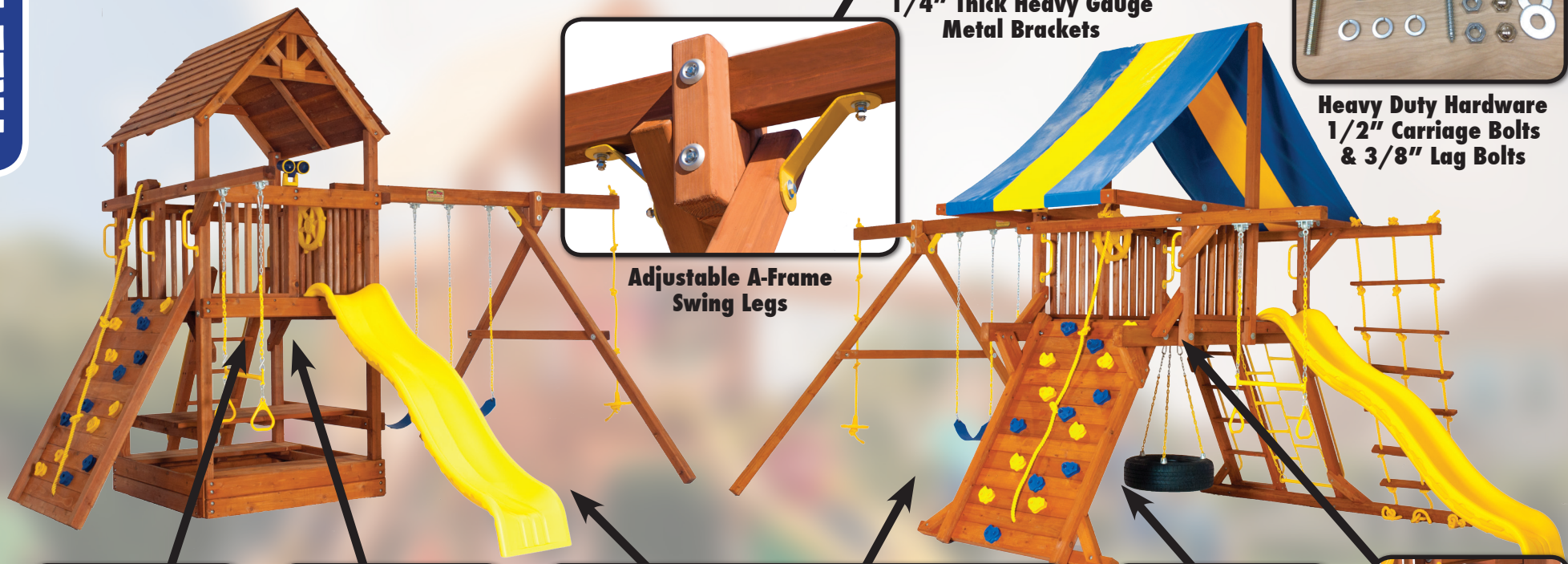

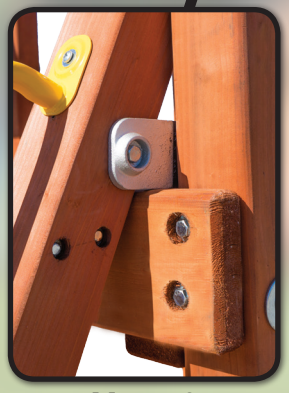

Ladder Safety Bracket

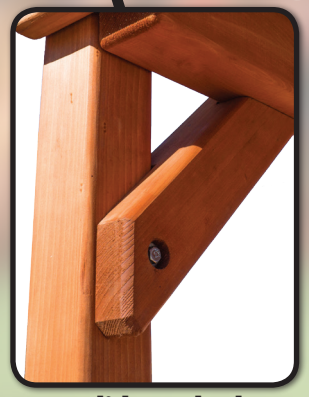

Solid Notched Brackets

Fastener Free Decks

Detailed Finish

Solid Notched Brackets

5.4 BENGAL FORT CONFIG 2 W/WOOD ROOF

PERFECT FOR PARTIES!

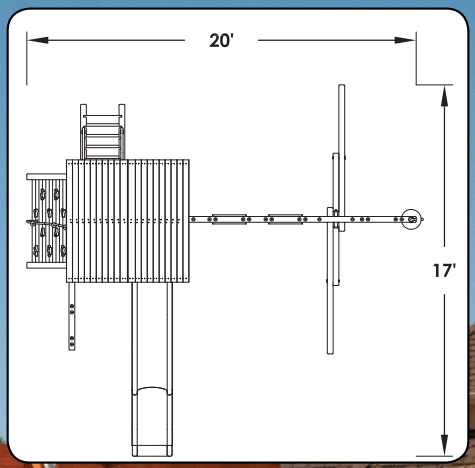

FEATURES:

- 25 Sq Ft Deck
- Picnic Table
- 5 Safety Handles
- Dbl Wall Scoop Slide
- Trapeze w/Rings
- 2 Ladder Handles
- Wood Roof
- 3 Pos. Swing Beam
- Ship's Wheel
- Wooden Entry Ladder
- 2 Belt Swings
- Binoculars
- Rockwall w/Rope
- Rope w/Disk

5.4 BENGAL FORT
CONFIG 2 W/TARP

FEATURES:

- 25 Sq Ft Deck
- DoubleWall Scoop Slide
- Tarp Roof
- Wooden Entry Ladder
- Rockwall w/Rope
- Picnic Table
- Trapeze w/Rings
- 3 Pos. Swing Beam
- 2 Belt Swings
- Rope w/Disk
- 5 Safety Handles
- 4 Ladder Handles
- Ship's Wheel
- Telescope

5.4 BENGAL FORT
CONFIG 3 W/TARP

FEATURES:

- 25 Sq Ft Deck
- DoubleWall Scoop Slide
- Tarp Roof
- Wooden Entry Ladder
- Rockwall w/Rope
- Picnic Table
- Trapeze w/Rings
- Monkey Bars
- 3 Pos. Swing Beam
- 2 Belt Swings
- Rope w/Disk
- 5 Safety Handles
- 4 Ladder Handles
- Ship's Wheel
- Telescope

5.0 BENGAL FORT
CONFIG 2 W/WOOD ROOF

FEATURES:

- 25 Sq Ft Deck
- Wave Slide
- Wood Roof
- Wooden Entry Ladder
- Rockwall w/Rope
- Picnic Table
- Trapeze w/Rings
- 3 Pos. Swing Beam
- 2 Belt Swings
- Rope Disk
- 5 Safety Handles
- 2 Ladder Handles
- Ship's Wheel
- Telescope

SMALL BACKYARD FORT

FEATURES:

- 25 Sq Ft Deck
- DoubleWall Scoop Slide
- Tarp Roof
- Wooden Entry Ladder
- Rockwall w/Rope
- Picnic Table
- Double Accessory Arm
- 1 Belt Swings
- 1 Trapeze w/Rings
- 5 Safety Handles
- 2 Ladder Handles
- Ship's Wheel
- Telescope

5.4 BENGAL FORT CONFIG 2 FULLY ENCLOSED

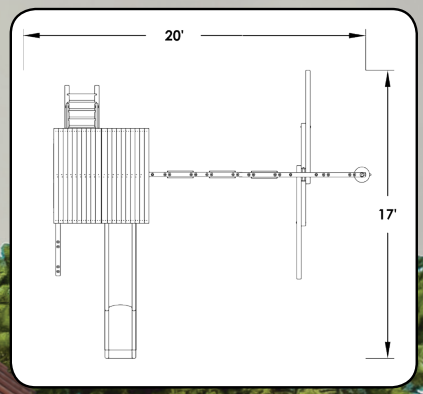

FEATURES:

25 Sq Ft Deck
Dbl Wall Scoop Slide
Wood Roof
Wood Entry Ladder
Toddler Bucket
Rope Ladder
Trapeze w/Rings
Glider w/Brackets
4 Pos. Swing Beam
3 Belt Swings
Rope w/Disk
2 Safety Handles
2 Ladder Handles
Ship's Wheel
Telescope

5.4 BENGAL FORT CONFIG 5 W/TARPS

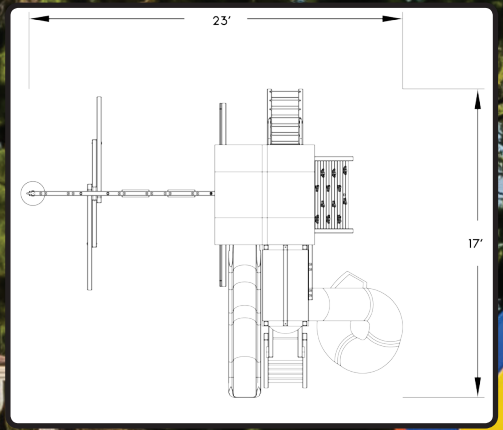

FEATURES:

- 25 Sq Ft Deck
- Rockwall w/Rope
- 5 Safety Handles
- Ship's Wheel
- 16 Sq Ft Deck
- Picnic Table
- 4 Ladder Handles
- Telescope
- Dbl Wall Scoop Slide
- 3 Pos. Swing Beam
- Monkey Bars
- Binoculars
- Tarp Roof
- 2 Belt Swings
- Loft w/Bubble Panel
- Wooden Entry Ladder
- Rope w/Disk
- Dlx Spiral Slide

6.4 BENGAL FORT CONFIG 2 W/WOOD ROOF

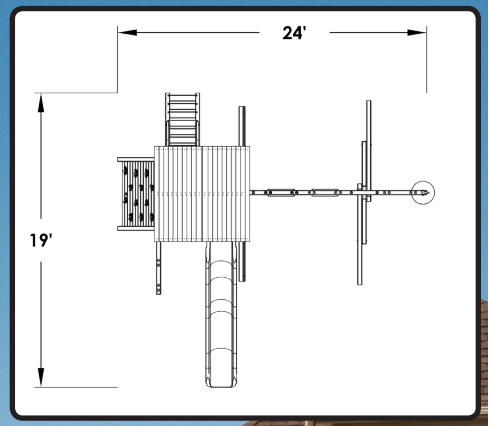

FEATURES:

25 Sq Ft Deck
Picnic Table
5 Safety Handles

Dbl Wall Scoop Slide
Trapeze w/Rings
2 Ladder Handles

Wood Roof
3 Pos. Swing Beam
Ship's Wheel

Wooden Entry Ladder
2 Belt Swings
Telescope

Rockwall w/Rope
Rope w/Disk

6.4 BENGAL FORT CONFIG 5 W/TARPS

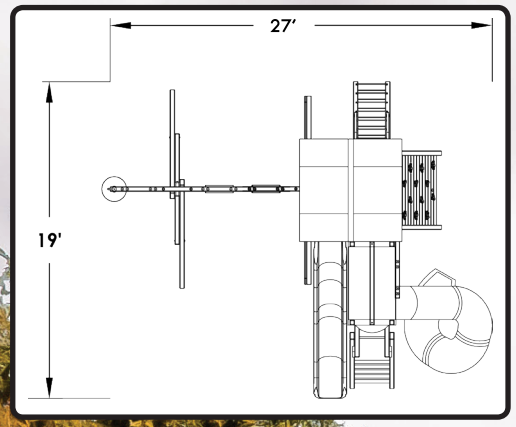

FEATURES:

- 25 & 16 Sq Ft Deck
- Picnic Table
- Loft w/Bubble Panel
- Telescope
- Dbl Wall Scoop Slide
- 3 Pos. Swing Beam
- Dlx. Spiral Slide
- Binoculars
- Tarp Roofs
- 2 Belt Swings
- 5 Safety Handles
- Wooden Entry Ladder
- Rope w/Disk
- 4 Ladder Handles
- Rockwall w/Rope
- Monkey Bars
- Ship's Wheel

6.4 BENGAL FORT
CONFIG 2

FEATURES:

- 25 Sq Ft Deck
- Dbl Wall Scoop Slide
- Tarp Roof
- Wooden Entry Ladder
- Rockwall w/Rope
- Picnic Table
- Trapeze w/Rings
- 3 Pos. Swing Beam
- 2 Belt Swings
- Rope w/Disk
- 5 Safety Handles
- 2 Ladder Handles
- Ship's Wheel
- Telescope

7.0 BENGAL FORT
DOUBLE DECKER CONFIG 5

FEATURES:

- 50 Sq Ft Multi Level Deck
- 24 Sq Ft Mega Loft Deck
- Dbl Wall Scoop Slide
- Tart Roofs
- Wooden Entry Ladder
- Rockwall w/Rope
- Picnic Table
- Trapeze w/Rings
- 4 Pos. Swing Beam
- 3 Belt Swings
- Rope w/Disk
- 5 Safety Handles
- 4 Ladder Handles
- Ship's Wheel & Telescope
- Wave Slide
- Dlx Spiral Slide

7.0 BENGAL FORT DOUBLEDECKER CONFIG 2 W/ SPIRAL SLIDE

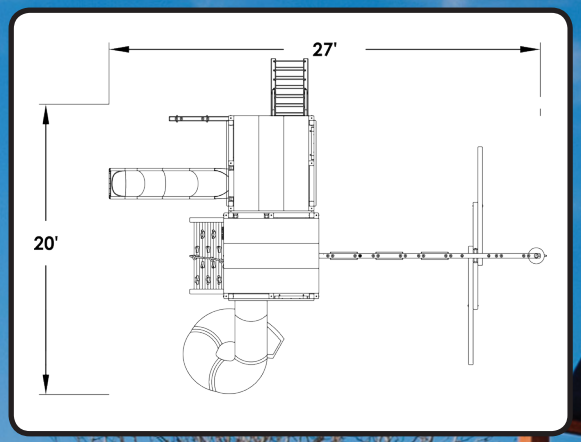

GIVE YOUR PIRATE A SHIP TO SAIL IN!

FEATURES:

- 50 Sq Ft Multi Level Deck
- Tic-Tac-Toe Panel
- 4 Pos. Swing Beam
- Ship's Wheel
- Dlx. Spiral Slide
- Chalkboard Panel
- 3 Belt Swings
- Telescope
- Wave Slide
- Rockwall w/Rope
- Rope w/Disk
- Binoculars
- Tarp Roofs
- Picnic Table
- 5 Safety Handles
- Wooden Entry Ladder
- Trapeze w/Rings
- 2 Ladder Handles

VISIT OUR WEBSITE AT WWW.TREEFROGSSWINGSETS.COM

6.4 MEGADECK FORT FULLY ENCLOSED

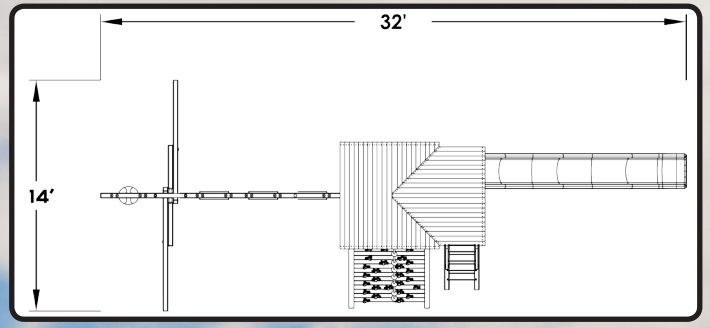

FEATURES:

35 Sq Ft Deck
Treehouse Panels
Glider w/Brackets

Dbl Wall Scoop Slide
Playhouse Panels
Rope w/Disk

Wood Roof
Lower Floor
4 Safety Handles

Wooden Entry Ladder
4 Pos. Swing Beam
2 Ladder Handles

Rockwall w/Rope
2 Belt Swings
Ship's Wheel & Binoculars

5.4 MEGADECK FORT

FEATURES:

- 35 Sq Ft Deck
- Dbl Wall Scoop Slide
- Wood Roof
- Wooden Entry Ladder
- Rockwall w/Rope
- Treehouse Panels
- Picnic Table
- Trapeze w/Rings
- 4 Pos. Swing Beam
- 2 Belt Swings
- Glider w/Brackets
- Rope w/Disk
- 5 Safety Handles
- 2 Ladder Handles
- Ship's Wheel
- Binoculars

7.0 MEGADECK FORT
DOUBLEDECKER

FEATURES:

- 60 Sq Ft Multi-Level Deck
- 2 - Dbl Wall Scoop Slide
- Wood Roof
- Wooden Entry Ladder
- Rockwall w/Rope
- Treehouse Panels
- Picnic Table
- Trapeze w/Rings
- 4 Pos. Swing Beam
- 3 Belt Swings
- Rope w/Disk
- 5 Safety Handles
- 2 Ladder Handles
- Ship's Wheel
- Binoculars

7.0 MEGADECK FORT

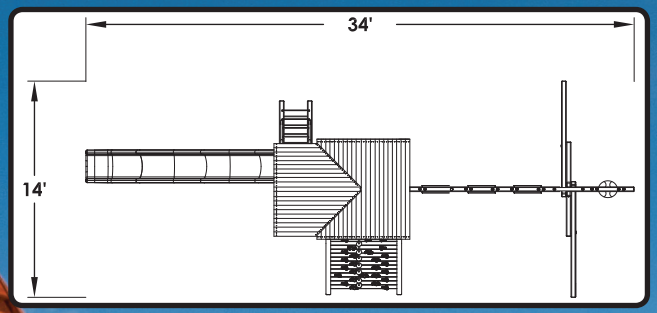

FEATURES:

- 35 Sq Ft Deck
- Picnic Table
- 5 Safety Handles
- Dbl Wall Scoop Slide
- Trapeze w/Rings
- 2 Ladder Handles
- Wood Roof
- 4 Pos. Swing Beam
- Ship's Wheel
- Wooden Entry Ladder
- 3 Belt Swings
- Telescope
- Rockwall w/Rope
- Rope w/Disk

5.0 TEXAN PLAYCENTER
CONFIG 2 W/TARP

FEATURES:

- 25 Sq Ft Deck
- Wave Slide
- Tarp Roof
- Wood Step/Chain Combo Ladder
- Rockwall w/Rope
- Rope Ladder
- Trapeze w/Rings
- Tire Swing
- 3 Pos. Swing Beam
- 2 Belt Swings
- Rope Disk
- 4 Safety Handles
- 3 Ladder Handles
- Ship's Wheel
- Telescope

5.4 TEXAN PLAYCENTER
SMALL BACKYARD

FEATURES:

- 25 Sq Ft Deck
- Dbl Wall Scoop Slide
- Tarp Roof
- Rockwall w/Rope
- Rope Ladder
- Trapeze w/Ring
- Wood Step/Chain Combo Ladder
- Tire Swing
- Double Accessory Arm
- 1 Belt Swing
- 4 Safety Handles
- 3 Ladder Handles
- Ship's Wheel
- Telescope

5.4 TEXAN PLAYCENTER CONFIG 2 W/TARPS

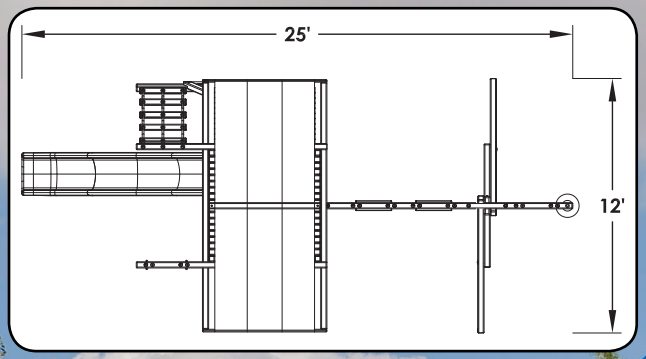

parent tested parent approved™
WINNER
www.ptpamedia.com

8.5 FT SWING BEAM

10FT DOUBLEWALL SCOOP SLIDE

5.4FT DECK HT

FEATURES:

25 Sq Ft Deck	Dbl Wall Scoop Slide	Tarp Roof	Rockwall w/Rope	Rope Ladder
Trapeze w/Ring	Wood Step/Chain Combo Ladder	Tire Swing	3 Pos. Swing Beam	2 Belt Swings
Rope w/Disk	4 Safety Handles	3 Ladder Handles	Ship's Wheel	Telescope

5.4 TEXAN PLAYCENTER
CONFIG 3 W/TARP

5.4 TEXAN PLAYCENTER
CONFIG 4 W/TARPS

5.4 TEXAN PLAYCENTER
CONFIG 5 W/TARPS

FEATURES:

- 25 Sq Ft Deck
- Dbl Wall Scoop Slide
- Tarp Roofs
- Rockwall w/Rope
- Rope Ladder
- 16 Sq Ft Loft Deck
- Wood Step/Chain Combo Ladder
- Tire Swing
- 3 Pos. Swing Beam
- 2 Belt Swings
- Rope w/Disk
- Monkey Bars
- Loft w/Bubble Panel
- Dlx. Spiral Slide
- 4 Safety Handles
- Trapeze w/Ring
- 5 Ladder Handles
- Ship's Wheel
- Telescope
- Binoculars

6.4 TEXAN PLAYCENTER CONFIG 2 FULLY ENCLOSED

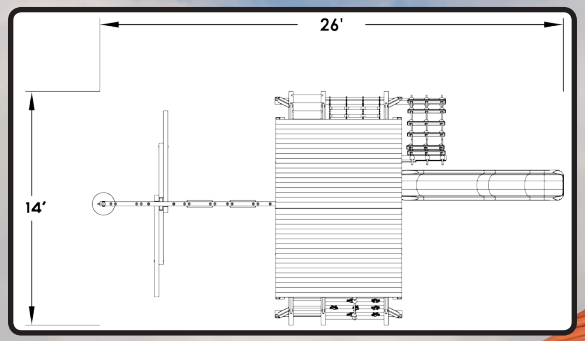

SHOWN W/DBL WALL WAVE SLIDE & TARPS

FEATURES:

25 Sq Ft Deck	Dbl Wall Scoop Slide	Wood Roof	Rockwall w/Rope	Rope Ladder
Trapeze w/Ring	Wood Step/Chain Combo Ladder	Treehouse Panels	Tire Swing	3 Pos. Swing Beam
2 Belt Swings	Rope w/Disk	4 Safety Handles	3 Ladder Handles	Ship's Wheel & Telescope

6.4 TEXAN PLAYCENTER CONFIG 5 W/WOOD ROOF

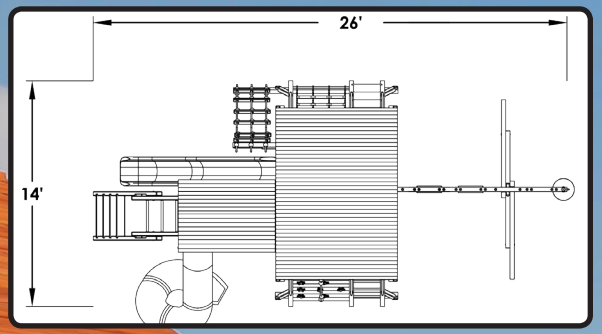

FEATURES:

25 Sq Ft Deck	Dbl Wall Scoop Slide	Wood Roofs	Rockwall w/Rope	Rope Ladder
16 Sq Ft Loft Deck	Wood Step/Chain Combo Ladder	Tire Swing	3 Pos. Swing Beam	2 Belt Swings
Rope w/Disk	Monkey Bars	Loft w/Bubble Panel	Dlx. Spiral Slide	4 Safety Handles
Trapeze w/Ring	5 Ladder Handles	Ship's Wheel	Telescope	Binoculars

7.4 TEXAN PLAYCENTER
CONFIG 2 W/TARP

FEATURES:

- 25 Sq Ft Deck
- Dbl Wall Scoop Slide
- Tarp Roof
- Rockwall w/Rope
- Rope Ladder
- Trapeze w/Ring
- Wood Step/Chain Combo Ladder
- Tire Swing
- 4 Pos. Swing Beam
- 3 Belt Swings
- Rope w/Disk
- Safety Handles
- 3 Ladder Handles
- Ship's Wheel
- Telescope

7.4 TEXAN PLAYCENTER
CONFIG 2 W/SPIRAL SLIDE

FEATURES:

- 25 Sq Ft Deck
- Dlx. Spiral Slide
- Tarp Roof
- Rockwall w/Rope
- Rope Ladder
- Trapeze w/Ring
- Wood Step/Chain Combo Ladder
- Tire Swing
- 4 Pos. Swing Beam
- 3 Belt Swings
- Rope w/Disk
- 4 Safety Handles
- 3 Ladder Handles
- Ship's Wheel
- Telescope

7.4 TEXAN PLAYCENTER CONFIG 5 W/TARPS

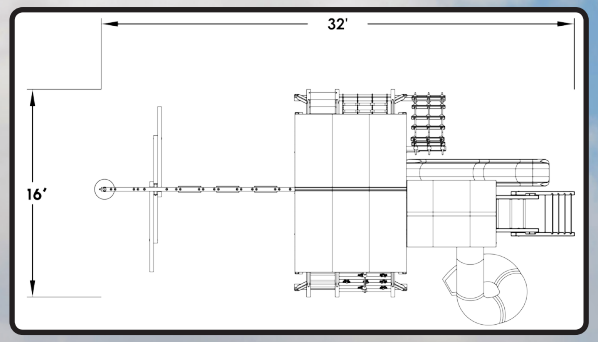

FEATURES:

25 Sq Ft Deck
Rockwall w/Rope
Tire Swing
Monkey Bars
5 Ladder Handles

24 Sq Ft Mega Loft
Rope Ladder
4 Pos. Swing Beam
Loft w/Bubble Panel
Ship's Wheel

Dbl Wall Scoop Slide
Trapeze w/Ring
3 Belt Swings
Dlx. Spiral Slide
Telescope

Tarp Roofs
Wood Step/Chain Combo Ladder
Rope w/Disk
4 Safety Handles
Binoculars

5.4 QUAD-CLIMBER PLAYCENTER CONFIG 2 W/TARPS

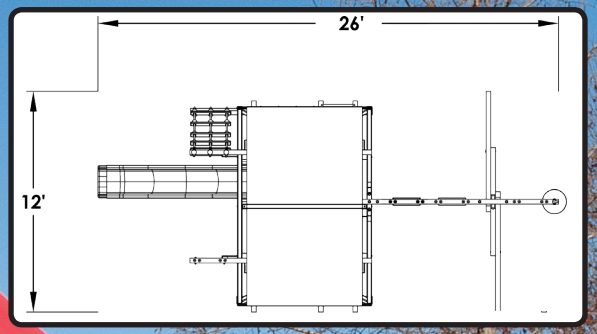

FEATURES:

32 Sq Ft Deck
Full Rung Ladder
3 Pos. Swing Beam
Ship's Wheel

Dbl Wall Scoop Slide
Full Rockwall w/Ropes
2 Belt Swings
Telescope

Tarp Roof
Rope Ladder
Rope w/Disk

Full Wood Step Ladder
Trapeze w/Rings
4 Safety Handles

Full Chain Ladder
Tire Swing
5 Ladder Handles

5.4 QUAD-CLIMBER PLAYCENTER
CONFIG 5 W/TARP

FEATURES:

- 32 Sq Ft Deck
- Dbl Wall Scoop Slide
- Tarp Roofs
- Full Wood Step Ladder
- Full Chain Ladder
- Full Rung Ladder
- Full Rockwall w/Ropes
- Rope Ladder
- Trapeze w/Rings
- Tire Swing
- 3 Pos. Swing Beam
- 2 Belt Swings
- Rope w/Disk
- 4 Safety Handles
- 7 Ladder Handles
- Ship's Wheel
- Telescope

6.4 QUAD-CLIMBER PLAYCENTER
CONFIG 2 W/WOOD ROOF

FEATURES:

- 32 Sq Ft Deck
- Dbl Wall Scoop Slide
- Wood Roofs
- Full Wood Step Ladder
- Full Chain Ladder
- Full Rung Ladder
- Full Rockwall w/Ropes
- Rope Ladder
- Trapeze w/Rings
- Tire Swing
- 3 Pos. Swing Beam
- 2 Belt Swings
- Rope w/Disk
- 4 Safety Handles
- 5 Ladder Handles
- Ship's Wheel
- Telescope

6.4 QUAD-CLIMBER PLAYCENTER CONFIG 2
FULLY ENCLOSED

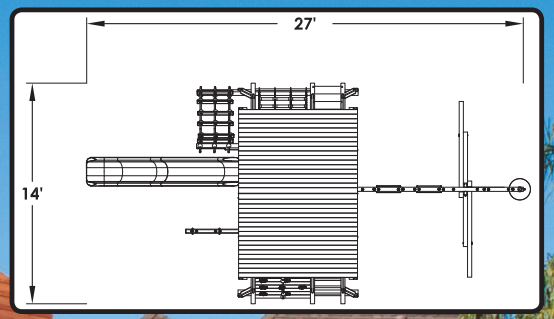

FEATURES:

- 32 Sq Ft Deck
- Full Rung Ladder
- Chalk Board
- 4 Safety Handles
- Dbl Wall Scoop Slide
- Full Rockwall w/Ropes
- Tire Swing
- 5 Ladder Handles
- Wood Roof
- Treehouse Panels
- 3 Pos. Swing Beam
- Ship's Wheel
- Full Wood Step Ladder
- Rope Ladder
- 2 Belt Swings
- Binoculars
- Full Chain Ladder
- Trapeze w/Rings
- Rope w/Disk

6.4 QUAD-CLIMBER PLAYCENTER CONFIG 5 W/WOOD ROOFS

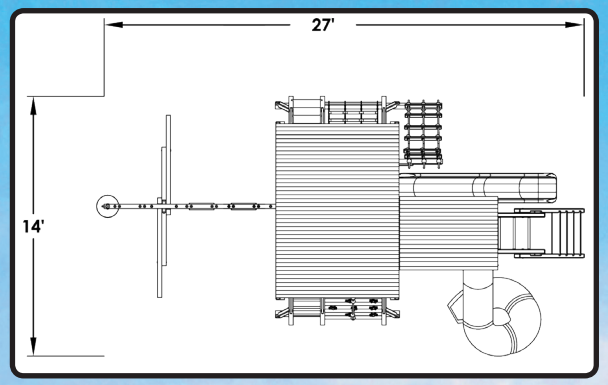

FEATURES:

- 32 & 16 Sq Ft Deck
- Full Rung Ladder
- 2 Belt Swings
- 4 Safety Handles
- Dbl Wall Scoop Slide
- Full Rockwall w/Ropes
- Rope w/Disk
- 7 Ladder Handles
- Wood Roof
- Rope Ladder
- Monkey Bars
- Ship's Wheel
- Full Wood Step Ladder
- Tire Swing
- Loft w/Bubble Panel
- Telescope
- Full Chain Ladder
- 3 Pos. Swing Beam
- Dlx. Spiral Slide
- Binoculars

7.4 QUAD-CLIMBER PLAYCENTER
CONFIG 2 W/TARP

FEATURES:

- 32 Sq Ft Deck
- Dbl Wall Scoop Slide
- Tarp Roof
- Full Wood Step Ladder
- Full Chain Ladder
- Full Rung Ladder
- Full Rockwall w/Ropes
- Rope Ladder
- Trapeze w/Rings
- Tic-Tac-Toe Panel
- Chalkboard Panel
- Tire Swing
- 4 Pos. Swing Beam
- Tire Swing
- 3 Belt Swings
- Rope w/Disk
- 4 Safety Handles
- 5 Ladder Handles
- Ship's Wheel
- Telescope

7.4 QUAD-CLIMBER PLAYCENTER
CONFIG 2 W/SPIRAL SLIDE

FEATURES:

- 32 Sq Ft Deck
- Dlx. Spiral Slide
- Tarp Roof
- Full Wood Step Ladder
- Full Chain Ladder
- Full Rung Ladder
- Full Rockwall w/Ropes
- Rope Ladder
- Tic-Tac-Toe Panel
- Chalkboard Panel
- Tire Swing
- 4 Pos. Swing Beam
- 3 Belt Swings
- Rope w/Disk
- 4 Safety Handles
- 5 Ladder Handles
- Ship's Wheel
- Binoculars

7.4 QUAD-CLIMBER PLAYCENTER
CONFIG 5 W/TARPS

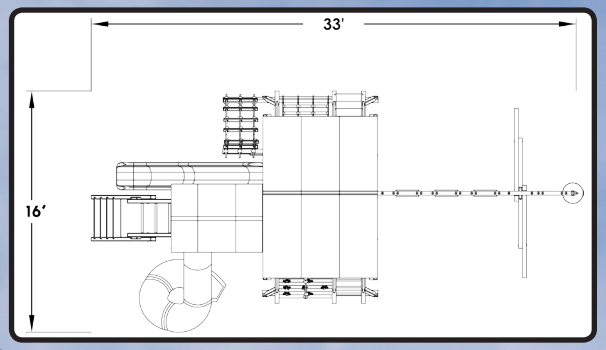

FEATURES:

32 Sq Ft Deck	Dbl Wall Scoop Slide	Tarp Roof	Full Wood Step Ladder	Full Chain Ladder
24 Sq Ft Mega Loft	Full Rung Ladder	Rope Ladder	Full Rockwall w/Ropes	Tire Swing
4 Pos. Swing Beam	3 Belt Swings	Rope w/Disk	Loft w/Bubble Panel	Dlx Spiral Slide
4 Safety Handles	7 Ladder Handles	Ship's Wheel	Telescope & Binoculars	Monkey Bars

FUZION MEGALOPOLIS™ SERIES

Jungle Bridges...Crawl Tunnels...Ramps...Create your own custom Play Megalopolis by Connecting one Play Set to another Play Set to another Play Set to another Play Set...

Contact your Tree Frogs representative to assist in designing your dream play system.

2015 TREE FROGS LIMITED LIFETIME WARRANTY

Tree Frogs is proud to offer you our Limited Lifetime, 10 Year, 5 Year and 1 Year Warranty.

Tree Frogs Warranties all Redwood and Cedar components against structural failure due to warping, wood rot, insect infestation (excluding Carpenter Bees) or decay for the period of 10 Years from the date of original purchase. The Redwood and Cedar components warranty is extended to a Limited Lifetime Warranty to the original owner upon registering this warranty within 90 days of purchase at www.treefrogsswingsets.com.A 10-Year limited Warranty applies to all roto-molded slides, ductile iron swing hangers, all tire swivels, metal climbing rungs and swing beam brackets against failure due to rust or failure in defect in material.

This warranty does not cover cracks, fissions, checks, fading, knots and weathering that are normal natural characteristics of wood, that do not affect the structural integrity of the product. Surface rust, fading, weathering, cracks/chips in coatings and corrosion that does not affect structural integrity is not covered by this warranty.

Furthermore, for a period of 5-Years, Tree Frogs limited warranties applies to all components & accessories including all swings, chain ladders, gliders, handles, brackets, bubble panels, tarps, steering/ships wheels, telescopes, binoculars, buoy ball, disc, (except ropes) that are not covered under the 10-Year Warranty to be free from defects in material and workmanship. This includes all blow molded slides. Surface rust, fading, weathering, cracks/chips in coatings and corrosion that does not affect structural integrity is not covered by this warranty.

And for a period of 1-Year Tree Frogs warranties all ropes to be free of defects in material and workmanship. This includes all structural foam molded slides. Fading is not considered a defect and may occur with seasonal and geographical conditions.

This warranty is limited to a repair or replacement of the defective part. Product covered under this warranty will be shipped at the customer's expense. Tree Frogs is not responsible for any expense associated with freight, or delivery and installation of the warranted part(s). Tree Frogs reserves the right to inspect all warranty claim parts for which a claim has been made.

This limited warranty applies only to the original retail purchaser and for residential use only. These warranties void when product is transferred or sold or no longer in possession by original owner. A copy of the original invoice must be presented to initiate warranty claim. This limited warranty does not cover damage from abuse, acts of God, vandalism, negligence, alterations, normal wear & tear, use other than residential, unauthorized modification, damage due to moving of product or improper installation and or use. Any modification could damage the structural integrity of the play system and voids all warranties.

This warranty is exclusive and expressly in lieu of all other warranties, expressed or implied, including warranties of merchantability or fitness for use. Tree Frogs does not assume, or authorize any person to assume for us, any other liability in connection with the sale of our products.

This warranty gives you specific legal rights, and you also may have other rights that vary from state to state.

*WARRANTY EXCLUSIONS: Lemur Fort (1 YR WARRANTY)
**WARRANTY EXCLUSIONS: Toucan Series (Limited 5Yr/5Yr/1Yr WARRANTY)
***WARRANTY EXCLUSIONS: Jaguar Series, Parrot Island Series (Limited 10Yr/5Yr/1Yr Warranty)

Register your play system's warranty at www.treefrogsswingsets.com.
Tree Frogs reserves the right at any time to change product specifications or substitute similar components.
See your owner's manual for the regular maintenance requirements & maintenance guidelines. Your child's play system & perimeter play zone should be inspected regularly for any wear & safety hazards.

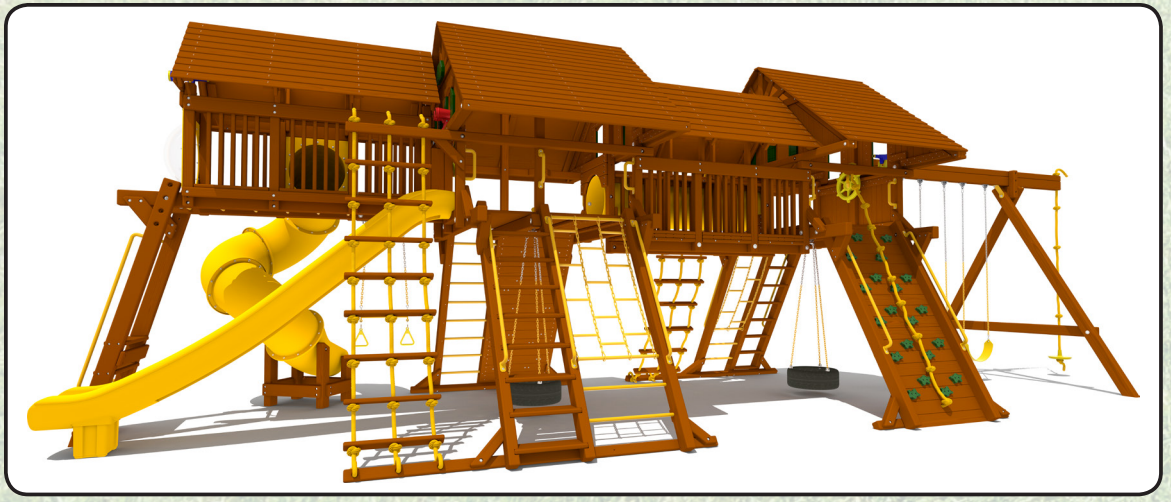

2015 JAGUAR PLAYSET SERIES WARRANTY

Tree Frogs is proud to offer you our Limited 10 Year, 5 Year and 1 Year Warranty.

Tree Frogs Warranties all Cedar components against structural failure due to warping, wood rot, insect infestation (excluding Carpenter Bees) or decay for a period of 10 Years from the date of original purchase. A 10-Year limited Warranty also applies to all roto-molded slides, ductile iron swing hangers, all tire swivels, metal climbing rungs and swing beam brackets against failure due to rust or failure in defect in material. This warranty does not cover cracks, fissions, checks, fading, knots and weathering that are normal natural characteristics of wood, that do not affect the structural integrity of the product. Surface rust, fading, weathering, cracks/chips in coatings and corrosion that does not affect structural integrity is not covered by this warranty.

Furthermore, for a period of 5-Years, Tree Frogs limited warranties applies to all components & accessories including all swings, chain ladders, gliders, handles, brackets, bubble panels, tarps, steering/ships wheels, telescopes, binoculars, buoy ball, disc, (except ropes) that are not covered under the 10-Year Warranty to be free from defects in material and workmanship. This includes all blow molded slides. Surface rust, fading, weathering, cracks/chips in coatings and corrosion that does not affect structural integrity is not covered by this warranty.

And for a period of 1-Year Tree Frogs warranties all ropes to be free of defects in material and workmanship.
This includes all structural foam molded slides. Fading is not considered a defect and may occur with seasonal and geographical conditions.

This warranty is limited to a repair or replacement of the defective part. Product covered under this warranty will be shipped at the customer's expense. Tree Frogs is not responsible for any expense associated with freight, or delivery and installation of the warranted part(s). Tree Frogs reserves the right to inspect all warranty claim parts for which a claim has been made.

This limited warranty applies only to the original retail purchaser and for residential use only. These warranties void when product is transferred or sold or no longer in possession by original owner. A copy of the original invoice must be presented to initiate warranty claim. This limited warranty does not cover damage from abuse, acts of God, vandalism, negligence, alterations, normal wear & tear, use other than residential, unauthorized modification, damage due to moving of product or improper installation and or use.Any modification could damage the structural integrity of the play system and voids all warranties.

This warranty is exclusive and expressly in lieu of all other warranties, expressed or implied, including warranties of merchantability or fitness for use. Tree Frogs does not assume, or authorize any person to assume for us, any other liability in connection with the sale of our products.

This warranty gives you specific legal rights, and you also may have other rights that vary from state to state.

*WARRANTY EXCLUSIONS: Lemur Fort (1 YR WARRANTY)
**WARRANTY EXCLUSIONS: Toucan Fort, Toucan Playcenter (Limited 5Yr/5Yr/1Yr WARRANTY)

Register your play system's warranty at www.treefrogsswingsets.com.
Tree Frogs reserves the right at any time to change product specifications or substitute similar components.

See your owner's manual for the regular maintenance requirements & maintenance guidelines. Your child's play system & perimeter play zone should be inspected regularly for any wear & safety hazards.

Tree Frogs®

Wooden Swing Set Factory

AMERICA'S BEST VALUE IN SWING SETS.™

KID STRUCTURES LLC
1994 22nd ANNIVERSARY 2015
HOUSTON, TX.

AN INDUSTRY LEADER FOR OVER 22 YEARS!