2017-2018

WIPER BLADES
WISCHBLÄTTER
RUITENWISSERS
BALAIS D'ESSUIE-GLACE
TORKARBLAD
ESCOBILLAS LIMPIAPARABRISAS
ESCOVAS LIMPA VIDROS
SPAZZOLE TERGICRISTALLO
СТЕКЛООЧИСТИТЕЛИ
WYCIERACZKI
ΥΑΛΟΚΑΘΑΡΙΣΤΗΡΕΣ
SILECEK SÜPÜRGELERI
PYYHKIJÄNSULAT

The German wiper specialist

SWF

The SWF brand

- A brand that combines tradition and innovation.

Die Marke SWF

- *Eine Marke, die Tradition und Innovation vereint.*

1922

SWF "Spezial Werkzeugfabrik Feuerbach" is founded in Bietigheim, Germany.

SWF «Spezial Werkzeugfabrik Feuerbach» in Bietigheim, Deutschland, gegründet.

1927

First wipers and development of electric wiper motors, washing systems, lighting and other automotive parts.

SWF beginnt mit der Herstellung von Scheibenwischern und der Entwicklung von elektrischen Wischermotoren, Beleuchtungselementen und anderen Automobilersatzteilen.

1935

First wipers for curved windscreens.

Erster Scheibenwischer für gekrümmte Windschutzscheiben.

1958

First wipers specific to commercial vehicles.

Erster Scheibenwischer speziell für Nutzfahrzeuge entwickelt.

1974

The 1-meter wiper for buses; first integrated spoiler.

Das 1-Meter-Wischblatt für Busse und die Erfindung des integrierten Spoilers.

1998

Integration in the Valeo Group. With SWF, Valeo becomes a market leader in wiper systems.

SWF wird ein Teil der Valeo Gruppe. Mit SWF wird Valeo globaler Marktführer für Wischersysteme.

2000

First wear indicator for SWF wipers.

Erste Verschleißanzeige für SWF Scheibenwischer - von SWF erfunden!

2002

The first O.E. Flat Blades are developed and launched.

SWF liefert ersten Flachwischer in die Erstausrüstung.

2005

The introduction of the first Flat Blade upgrade.

Einführung des ersten Flachwischer-Nachrüstsortiments VisioFlex®.

2012

The Valeo Group wins a PACE* award for its AquaBlade® system produced in the Bietigheim plant in Germany.

Die Valeo-Gruppe gewinnt den PACE Award für sein Aquablade®-System das im Werk in Bietigheim, Deutschland produziert wird.*

2013

Launch of complete Flat Blade range for Trucks - VisioFlex® Trucks.

Einführung eines Komplettsortiments an VisioFlex® Flachwischern für LKWs.

2014

Launch of a complete hybrid range single blades.

Einführung des ersten HBlade-Einzelwischer Sortiments für den I.A.M.

2017

Launch of SWF Connect range.

Einführung des SWF-Connect Sortiments

*Premier Automotive Suppliers' Contribution to Excellence Award

GB Every effort has been made to ensure that the information contained in the catalogue is correct at the time of printing, but no warranty or representation is given or made as to the accuracy of such information and Valeo Service (UK) Ltd does not accept any liability whatsoever for any inaccuracies.
Valeo Service (UK) Ltd reserves the right to alter specifications and/or the final construction of products without notice. Product references referred to in this catalogue may not be available in all countries.
All orders for products are only accepted subject to the terms and conditions of Valeo Service (UK) Ltd. Photographs and drawings are not binding on Valeo Service (UK) Ltd. The copyright in this publication belongs to Valeo Service (UK) Ltd exclusively. No part of this publication may be reproduced by any means without the prior authorization of Valeo Service (UK) Ltd.

D Die Verwendungsempfehlungen zu den in diesem Katalog aufgeführten Produkten beziehen sich auf den zum Zeitpunkt des Erscheinens dieses Katalogs existierenden Fahrzeugbestand.
Valeo Service Deutschland GmbH übernimmt keine Haftung für Änderungen, Ersetzungen oder Streichungen der Fahrzeuganwendung oder -Empfehlungen, die besonders auf Initiative der Fahrzeughersteller auftreten können.
Die technischen Eigenschaften unserer Produkte unterliegen ständiger Entwicklung, um technischen und technologischen Verbesserungen Rechnung zu tragen.
Die Fotos oder Zeichnungen in diesem Katalog dienen ausschließlich der Veranschaulichung unserer Produkte.
Rechtliche Ansprüche können daraus nicht abgeleitet werden. Einige Produktreferenzen sind nicht in allen Ländern verfügbar. Lieferungen unterliegen den Allgemeinen Verkaufsbedingungen von Valeo Service Deutschland GmbH.
Die Vervielfältigung dieses Katalogs oder Teilen davon ohne die schriftliche Erlaubnis von Valeo Service Deutschland GmbH ist nicht zulässig.

F L'affectation et la préconisation des produits figurant dans nos catalogues prennent en compte l'état du parc automobile au jour de leur parution.
La responsabilité de Valeo Service ne saurait être engagée en cas de modification, substitution ou suppression des affectations ou préconisations qui pourraient intervenir notamment à l'initiative des constructeurs de véhicules.
Les caractéristiques techniques de nos produits sont susceptibles d'évoluer à tout moment pour tenir compte des améliorations techniques et technologiques.
Certaines références peuvent ne pas être disponibles dans tous les pays.
Les commandes sont régies par les conditions générales de vente de Valeo Service.
Photos et dessins non contractuels. La reproduction de tout ou partie de cette publication est interdite sans l'autorisation expresse et écrite de Valeo Service.

NL De ter zake van de producten in onze catalogi aangegeven bestemmingen en gedane aanbevelingen zijn gebaseerd op het wagenpark ten tijde van publicatie.
Valeo Service Benelux B.V. sluit elke aansprakelijkheid uit met betrekking tot wijziging, vervanging of annulering van de bestemmingen of aanbevelingen, die met name op initiatief van de autofabrikanten kunnen worden doorgevoerd.
De technische eigenschappen van onze producten kunnen ten alle tijden evolueren teneinde rekening te houden met technische en technologische verbeteringen. Bepaalde artikelen kunnen in bepaalde landen niet beschikbaar zijn.
Orders zijn onderworpen aan de algemene verkoopvoorwaarden van Valeo Service Benelux B.V.
Foto's en tekeningen zijn niet bindend.
De gehele of gedeeltelijke verveelvoudiging van deze uitgave zonder uitdrukkelijke voorafgaande schriftelijke toestemming van Valeo Service Benelux B.V. is verboden.

SP La aplicación de los productos sobre vehículos y las especificaciones de los productos que figuran en nuestros catálogos se refieren a la situación del parque de automóviles en la fecha de puesta en circulación de los productos.
Valeo Service España SA no asume ninguna responsabilidad en caso de modificación, sustitución o supresión de dichas aplicaciones y/o especificaciones que pudieran producirse por iniciativa de los fabricantes de automóviles.
Las características técnicas de nuestros productos son susceptibles de evolucionar en cualquier momento para incorporar las mejoras técnicas y tecnológicas que se desarrollen.
Las referencias de productos mencionadas en este catalogo puede que no estén disponibles en todos los países.
Los pedidos se regiran por las conditiones generales de venta de Valeo Service España SA.
Las fotografías y dibujos que aparecen en nuestros catálogos son meramente indicativas, por lo que no siempre coinciden exactamente con la apariencia externa de nuestros productos.
Se prohíbe la reproducción de todo o parte de esta publicación sin la autorización expresa y escrita de Valeo Service España SA.

P As prescrições e recomendações relativas ao uso ou utilidade dos produtos constantes nos nossos catálogos levam em consideração o estado do parque automóvel à época do lançamento desses produtos.
A Valeo Service não será responsável por quaisquer modificações, substituições ou supressões incidentes sobre as prescrições e recome dações relativas ao uso ou utilidade de nossos produtos, que sejam decorrentes de ações dos construtores de veículos.
As características técnicas dos nossos produtos são suscetíveis de alteração a qualquer momento para que sejam incorporadas melhorias técnicas e/ou tecnológicas.
Certas referências podem não estar disponíveis em todos os países.
Os pedidos feitos pelos clientes são regidos pelas condições gerais de venda da Valeo Service.
Fotos e desenhos não contratuais. A reprodução do todo ou de parte desta publicação é proibida sem a autorização expressa e por escrito da Valeo Service.

I Le applicazioni e le specifiche dei prodotti che figurano nei nostri cataloghi si riferiscono alla situazione del parco circolante al momento della pubblicazione.
Valeo Service Italia S.p.A. declina qualsiasi responsabilità in caso di modifica, sostituzione o soppressione di applicazioni o specifiche eventualmente apportate, senza preavviso, da parte dei Costruttori .
Le caratteristiche tecniche dei nostri prodotti sono suscettibili di modifiche in qualsiasi momento, per apportare migliorie tecniche e tecnologiche.
Alcuni riferimenti presenti in questo catalogo non sono disponibili in tutti i paesi.
Gli ordini sono regolamentati dalle condizioni generali di vendita di Valeo Service Italia S.p.A..
Le Foto ed i disegni che appaiono nel catalogo sono puramente indicativi. E' vietata la riproduzione della totalità o di una parte della presente pubblicazione senza un'esplicita autorizzazione scritta da parte di Valeo Service Italia S.p.A..

FIN Valeo Service on tehnyt kaiken voitavansa varmistuakseen tässä luettelossa annettavan tiedon oikeellisuudesta painatushetkellä, mutta se ei voi antaa vakuutta tietojen virheettömyydestä eikä hyväksy epätarkkuuksiin liittyviä korvausvaatimuksia.
Valeo Service pidättää itsellään oikeuden muuttaa tuotteiden teknisia tietoja ja/tai lopullista rakennetta ilman erillisilmoitusta.
Kaikkia tässä luettelossa mainittuja tuotteita ei mahdollisesti ole saatavilla kaikissa maissa.
Tuotetilaukset hyväksytään ainoastaan Valeo Service ehdoin.
Valokuvat ja piirrokset eivät sido Valeo Service oikeudellisesti. Kaikki tämän luettelon tekijänoikeudet kuuluvat Valeo Service :lle.
Julkaisun osittainenkin kopioiminen ilman Valeo Service etukäteen antamaa suostumusta on kielletty.

S Rekomendationerna i denna katalog grundar sig på tillgängliga uppgifter vid produktionstillfället. Genom ersättningar eller andra ändringar gjorda av fordonstillverkaren eller i torkarbladsproduktionen ansvaras ej och inga ersättningsanspråk kan därvid ställas.
För eventuella felaktigheter i kataloguppgifterna ansvaras ej. Det åligger montören att följa monteringsanvisningen och att säkerställa att produkten motsvarar den utbytta. Kopiering av katalogen eller delar av den utan skriftligt godkännande av Valeo Service är ej tillåtet.

RUS Назначение и рекомендации по эксплуатации продуктов, содержащихся в наших каталогах, указываются с учетом состояния автомобильного парка на день их появления на рынке.
Компания Общество с ограниченной ответственностью "Валео Сервис" не может нести ответственности в случае внесения изменений в рекомендации по эксплуатации продукции или их устранения, произошедших, в частности, по инициативе производителей автомобилей.
Технические характеристики нашей продукции могут претерпевать изменения в любой момент, с учетом усовершенствования технических и технологических процессов.
Некоторые виды продукции могут быть недоступные в отдельных странах.
Заказы осуществляются согласно общим правилам торговли, применяемым в компании Общество с ограниченной ответственностью "Валео Сервис".
Фотографии и изображения продукции могут не в полной мере соответствовать оригиналам. Воспроизведение всей или части настоящей публикации запрещено без специального письменного согласия компании Общество с ограниченной ответственностью "Валео Сервис".

PL Przeznaczenie i zalecenia dotyczące produktów figurujących w naszych katalogach biorą pod uwagę stan parku samochodowego w dniu ich wprowadzenia na rynek.
Firma «Valeo Service Eastern Europe Sp.z o.o.» nie może ponosić odpowiedzialności w przypadku zmiany, zastąpienia lub usunięcia wskazówek dotyczących przeznaczenia i zaleceń, które mogą wystąpić z inicjatywy producentów samochodów.
Dane techniczne naszych produktów mogą być w każdej chwili zmienione w celu uwzględnienia ulepszeń technicznych i technologicznych.
Niektóre modele mogą być niedostępne w niektórych krajach.
Zamówienia podlegają ogólnym warunkom umów «Valeo Service Eastern Europe Sp.zo.o.».
Wykorzystywanie w całości lub w części zdjęć i rysunków zamieszczonych w naszych katalogach wymaga pisemnej zgody «Valeo Service Eastern Europe Sp.z o.o.»

GR Έγινε κάθε προσπάθεια για να διασφαλιστεί η ορθότητα των πληροφοριών που περιέχονται σε αυτόν τον κατάλογο κατά την ημερομηνία εκτύπωσης του, αλλά δεν δίδεται καμία εγγύηση για την ακρίβεια των πληροφοριών αυτών και η Valeo Service δεν θα δεχτεί καμία απολύτως ευθύνη για οποιαδήποτε ανακρίβεια που μπορεί να προκύψει.
Η Valeo Service διατηρεί το δικαίωμα να αλλάζει προδιαγραφές και/ή την τελική μορφή των προϊόντων χωρίς προηγούμενη προειδοποίηση. Οι κωδικοί των προϊόντων που περιλαμβάνονται σε αυτόν τον κατάλογο μπορεί να μην είναι διαθέσιμοι και σε άλλες χώρες. Όλες οι παραγγελίες για προϊόντα γίνονται δεκτές μόνο κάτω από τους όρους και τις συνθήκες που ορίζει η Valeo Service. Οι φωτογραφίες και τα σχέδια δεν είναι δεσμευτικά για τη Valeo Service. Κανένα μέρος αυτής της έκδοσης δεν επιτρέπεται να αντιγραφεί με κανένα τρόπο χωρίς την προηγούμενη έγκριση της Valeo Service.

TR Kataloglarımızda yer alan ürünlerin tanım ve uygulama açıklamaları, araç parkının yayın tarihindeki durumuna göre belirtilmiştir.
Valeo Otomotiv Dağıtım A.Ş., özellikle araç, üreticilerinin inisiyatifi sonucu yapılan değişiklik, ikame veya yürürlükten kaldırmalardan sorumlu tutulamaz.
Ürünlerimizin teknik özellikleri, teknik ve teknolojik gelişmelere paralel olarak geliştirilebilir.
Bazı referanslar bazı ülkelerde bulunmayabilir.
Tüm siparişler, Valeo Otomotiv Dağıtım A.Ş.'nin genel satış koşullarına uygun olarak kabul edilir.
Fotoğraf ve resimler akdi değildir. Iş bu yayının Valeo Otomotiv Dağıtım A.Ş.'nin önceden verilmiş yazılı izni olmaksızın kısmen veya tamamen çoğaltılması yasaktır.

Summary
Übersicht

1 SWF → 12

2 NEW 32

3 → D P GB I 33

4 → SWF 34

5 109

6 IAM OES 110

7 SWF → 119

8 → D P GB I 123

9 → SWF 125

10 150

11 IAM OES 152

SWF the German wiper specialist. Bringing to the aftermarket a complete range of wiper blades for both passenger cars and trucks.

Das Original | Das Original Rear | HBlade® | Connect® | VisioFlex® AM | VisioFlex® OE | VisioFlex® Rear

Discover how we test SWF wiper blades in our labs and on racing tracks.

Entdecken Sie, wie wir unsere SWF-Wischblätter im Labor und auf der Rennstrecke testen.

***SWF**, der deutsche Wischerspezialist.*
Ein vollständiges Sortiment für PKW und NKW.

Das Original **Trucks**

Visio**Flex**® **Trucks**

www.youtube.com/
user/SWFperformance

Product numbers codification in numerical order

Aufbau der Referenznummern, numerische Reihenfolge

Refills / *Wischgummis*

115 7xx ▸ Refills
Wischgummis

Standard range / *Standard Sortiment*

116 1xx ▸ Single blades - Incl. HBlade®
Einzelwischblätter - Ink. HBlade®

116 2xx ▸ Fast-mover sets (2x same length)
Rennersets (2x die gleiche Länge)

116 3xx ▸ Specific sets
Spezifische Sets

116 5xx ▸ Specific rear blades
Spezielle Heckscheibenwischer

116 6xx ▸ Single spoiler blades
Einzelwischblätter mit Spoiler

Flat blade range / *Flachwischer-Sortiment*

119 2xx ▸
119 3xx ▸ Flat Blade sets VisioFlex®
119 4xx ▸ *VisioFlex® Erstausrüstungssets*

119 5xx ▸ Rear single Flat Blades VisioFlex®
VisioFlex® Heckflachwischer

119 7xx ▸ Flat Blade sets VisioFlex® upgrade
VisioFlex® Flachwischer Umrüstungssets

119 8xx ▸ Single Flat Blades VisioNext® upgrade
Einzelner VisioNext® Umrüstungswischer

SWF Connect

262 2xx ▸ Single flat blades Connect
Wischgummis

Das ◆ Original

LONG LASTING LONGLIFE PERFORMANCE

A comprehensive and optimised range of conventional blades for ensuring **a long lasting performance**

*Ein **vollständiges** Bügelwischer-Sortiment mit einer **langen Lebensdauer***

Range / *Sortiment*

- An optimised range for a maximum car park coverage.
- The solution also for **specific needs:** with spoilers, washer ramps, curved blades.
- «Mix & match» the **best requirement for your needs:** singles to optimize space, sets for convenience or a mixture of both.

- *Ein optimiertes Sortiment für maximale Fahrzeugabdeckung.*
- *Die Lösung auch für **besondere Ansprüche:** Spoiler, aufgesetzte Waschdüsen, gebogene Wischblätter.*
- *«Mix und Match», je nach Ihren Bedürfnissen: **Singles zur Platzoptimierung, Sets für mehr Komfort**, oder eine Mischung aus Singles und Sets.*

Rear visibility is also essential for your safety !

***Die Hecksicht** ist ebenfalls entscheidend für Ihre Sicherheit.*

Benefits / *Vorteile*

- 100% metal wiper blade technology for **O.E. performance.**
- Diagnostic at a glance – with the **intelligent wear indicator!**
- The wiper blade as a security product should be **replaced at least once a year.**

- *100% Vollmetallwischer für **Erstausrüstungswischqualität.***
- *Wischblattdiagnose auf einen Blick - mit der **intelligenten Verschleißanzeige!***
- *Als Sicherheitsprodukt sollte das Wischblatt **einmal im Jahr gewechselt werden.***

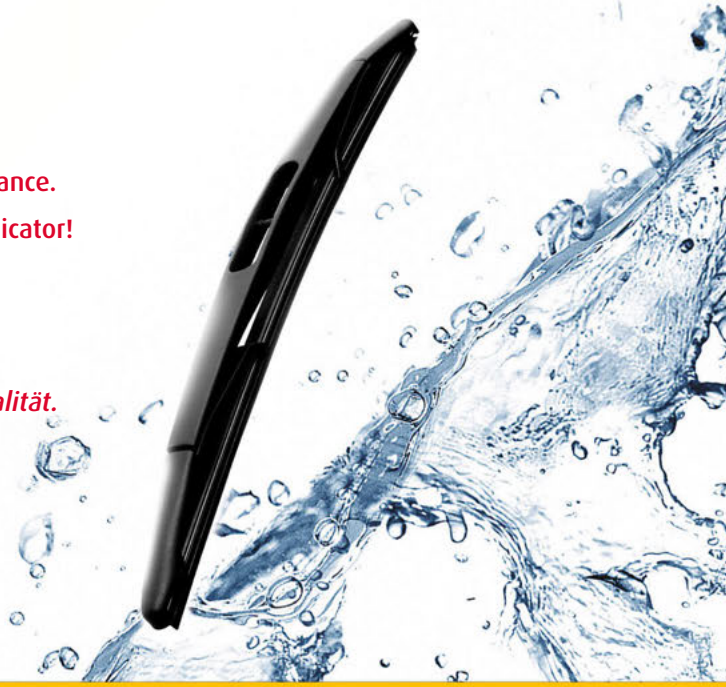

Das ◆ Original HBlade®

Always on the edge of innovation!

Führend bei Innovationen!

Covering structure like a Flat Blade
Spoiler that covers 100% of the blade with "anti wind lift" - shape

Verkleidung für einen Look ähnlich dem eines Flachwischers
Spoiler, der die gesamte Wischblattlänge mit einer „Anti-Windlift-Form" abdeckt

Premounted connector with locking cap
Easy fitting

Vormontierter Adapter mit Verschlusskappe
Einfache Montage

High quality rubber
For a smooth and silent wipe

Wischgummi von hoher Qualität
Für ein geschmeidiges und geräuscharmes Wischen

Bottom structure of a conventional wiper blade
Bows and axes

Unterbau mit Struktur eines konventionellen Wischblatts
Mit Bügelstruktur und Achsenverbindung

10 single blades

70 different models

This technology is becoming a major trend in O.E. for Asian and European car manufacturers.

To match the O.E. market, SWF offers a range of 10 single blades that covers 70 different models and more than 9 million vehicles in Europe.

Diese Technologie wird verstärkt von Herstellern in der Erstausrüstung verwendet, besonders von asiatischen und europäischen Automobilherstellern.

Um den herstellerspezifischen Anforderungen nachzukommen, bietet SWF ein Sortiment von 10 Einzelwischern an, die 70 verschiedene Fahrzeugmodelle und mehr als 9 Millionen Fahrzeuge in Europa abdeckt.

SWF HBlade® range x1

SWF	Description *Beschreibung*	mm	For/Für:
116172	SWF HBlade® X1 350mm	350	HONDA Jazz ; HYUNDAI I30, Santa Fe 3
116174	SWF HBlade® X1 400mm	400	MAZDA 6 ; TOYOTA Auris 1, Prius 3, Rav 4
116176	SWF HBlade® X1 450mm	450	MINI One, Mini Cooper ; HONDA Civic ; Opel Insigna
116177	SWF HBlade® X1 475mm	475	CHEVROLET Malibu ; MINI One, Mini Cooper
116178	SWF HBlade® X1 500mm	500	HONDA CR-Z ; LAND ROVER Range Rover
116179	SWF HBlade® X1 525mm	525	CHEVROLET Camaro, CITROEN C4 Aircross ; JEEP Grand Cherokee
116180	SWF HBlade® X1 550mm	550	JEEP Grand Cherokee ; LEXUS RX 350/450H
116183	SWF HBlade® X1 600mm	600	CITROEN C4 Aircross ; CITROEN C-Crosser ; PEUGEOT 4007/4008
116185	SWF HBlade® X1 650mm	650	HONDA Civic ; HYUNDAI Santa Fe 3 ; TOYOTA Auris 1, Verso
116187	SWF HBlade® X1 700mm	700	SUBARU Trezia ; TOYOTA Verso S, Yaris 3

The SWF HBlade® range x1 offers the following advantages:

- a short range for a maximum car park coverage
- better flexibility
- easier stock management

Das SWF HBlade® x1 Sortiment bietet die folgenden Vorteile:

- *Ein kurz Sortiment für maximale Fahrzeugabdeckung*
- *Bessere Flexibilität*
- *Leichteres Lagermanagement*

9M vehicles in Europe

The Flat Blade O.E. range with 100% O.E. wiping efficiency*

*Das Flachwischer-Sortiment mit 100%iger Effizienz**

Range / *Sortiment*

- More than **160 specific O.E.** Flat Blade part numbers.
- **25 O.E.** flat blades specific for rear applications.
- Coverage rate of **98%** for European car park.

- *Über **160 spezifische O.E.** Flachwischer-Artikelnummern.*
- ***25 O.E.** Flachwischer für spezifische Heckanwendungen.*
- *Fahrzeugabdeckung von **98%** (europäischer Park).*

Benefits / *Vorteile*

- An excellent wiping result that lasts - more than **1,000 pressure points** ensure an even pressure distribution.
- No uplift during high speed – thanks to the integrated **asymmetric spoiler.**
- A silent wipe – due to the high quality rubber.
- O.E. connection

- *Ein exzellentes Wischergebnis, das lange anhält – mehr als **1.000 Anpresspunkte** sorgen für eine optimale Druckverteilung*
- *Kein Abheben bei hohen Geschwindigkeiten – dank des integrierten **asymmetrischen Spoilers.***
- *Geräuscharmes Wischen – dank eines Wischgummis von höchster Qualität.*
- *O.E. connection*

* Aerodynamic performance of VisioFlex® compared to original parts aerodynamic performance.
* *Hochgeschwindigkeitsleistung des VisioFlex® Flachwischers im Vergleich zur Hochgeschwindigkeitsleistung des Originalteils.*

VisioFlex®

Your choice for excellence

AERODYNAMIC +30% PERFORMANCE

- Hook connection **to upgrade** conventional blades.
- **25 specific sets,** with 2 metal splines perfectly shaped for a specific windscreen.
- **Asymmetric spoiler** for an excellent aerodynamic performance.

- *Hakenanschluß **zum Umrüsten** von Bügelwischern.*
- ***25 spezifische** Set-Referenznummern.*
- Spitzenleistung durch den ***asymmetrischen Spoiler*** und die beiden an die Windschutzscheibe angepassten Federschienen.

VisioFlex® Rear blade

- 25 rear flat blades
- 97 different models covered

- *25 Heck-Flachwischer*
- *97 verschiedene Fahrzeugmodelle werden abgedeckt*

Improve our safety *by also replacing your rear blade!*

Erhöhen Sie Ihre eigene Sicherheit *und tauschen Sie auch Ihre Heckwischer! rear blade!*

1

SWF	x1 x2	mm/ inches			For/Für main applications / Hauptfahrzeuganwendungen	
▶ SWF - Das Original / HBlade® x1						
116109	x1	450 / 18	8x3/9x3/9x4	**U** (180808)	CITROËN FIAT HONDA OPEL RENAULT	**Saxo** (02/96 > 04/04) **Punto 2** (10/99 > 10/09) **Civic 3** (09/83 > 08/87) **Corsa C** (10/00 > 08/06) **Clio 2** (03/98 > 05/09)
116112	x1	500 / 20	8x3/9x3/9x4	**U** (180808)	BMW FORD PEUGEOT RENAULT VOLVO	**X3** (01/04 > 10/10) **Mondeo 1 / 2 / 3** (01/93 > 05/07) **306** (01/99 >) **Mégane 1** (10/95 > 09/02) **S40 / V40** (04/96 > 01/04)
116116	x1	280 / 11	7x2,5 6x2 7,1x2,5	**B** A (193588) N	DAIHATSU FORD SEAT VOLKSWAGEN	**Cuore** (11/03 > 06/07) **Fiesta 5** (05/02 > 10/08) **Arosa** (03/97 > 02/99) **Lupo** (10/98 >) **Polo 3** (07/94 > 10/01)
116117	x1	260 / 10	7,1x2,5 5,3x2	N (192401) C (192550)	CITROËN LAND ROVER	**2 CV** (1970 > 07/90) **Evoque** (09/11 >)
116119	x1	340 / 13	9x3 8x2 / 8x3	**T2** (189336) R (191088)	AUDI BMW MERCEDES VOLKSWAGEN	**A3** (06/03 > 08/12) **A4 Avant** (10/01 > 10/03) **3-Series Touring** (02/95 > 10/99) **A-Class** (09/97 > 08/04) **Golf 3 / 4** (11/91 > 10/03)
116120	x1	380 / 15	9x3 8x3 8x2 / 8x3	**T2** (189336) U2 (189335) R (191088)	AUDI FORD SUZUKI VOLKSWAGEN	**A3** (10/96 > 05/02) **A4 Avant** (06/94 > 09/01) **Fiesta 1** (06/76 > 08/83) **Swift** (03/95 > 01/05) **Golf 4** (05/99 > 08/05)
116121	x1	400 / 16	8x3/9x3/9x4	**U** (180808)	FIAT FORD HONDA RENAULT	**Punto 1** (03/93 > 09/99) **Fiesta 5** (05/02 > 10/08) **Ka 1** (10/96 > 10/08) **Civic 7** (04/01 > 12/05) **Scénic 1** (10/96 > 05/03)
116122	x1	400 / 16	9x3 8x2 / 8x3	T2 (189336) F3 (181694) R (191088)	BMW FIAT FORD SUBARU TOYOTA	**3-Series** (06/75 > 03/79) **Panda 1** (07/80 > 12/92) x1 **Fiesta 2** (09/83 > 02/89) **Justy** (02/84 > 1989) **Hi-Lux** (1977 > 07/88)
116124	x1	425 / 17	9x3	**T2** (189336) F3 (181694)	MITSUBISHI TOYOTA	**Colt 3** (10/87 > 11/91) **Hi-Ace** (1984 > 12/90) **Hi-Lux** (08/88 > 09/05) **Land-Cruiser** (1985 > 01/90) **Rav 4** (03/06 > 03/13)
116125	x1	450 / 18	9x3	**T2** (189336) F3 (181694)	BMW LAND ROVER MAZDA SUZUKI TOYOTA	**5-Series** (09/75 > 03/79) **Range Rover** (01/77 > 12/89) **626** (1979 > 1985) **Alto** (10/85 > 12/95) **Corolla** (08/81 > 07/87)
116126	x1	475 / 19	8x3/9x3/9x4	**U** (180808)	AUDI FORD OPEL VOLKSWAGEN	**A3** (05/02 > 05/03) **Mondeo 3** (01/01 > 05/07) **Astra G** (04/98 > 04/04) **Vectra B / C** (09/95 > 12/08) **Golf 3** (11/91 > 12/95)
116129	x1	475 / 19	9x3 9x3	T2 (189336) T4 (189073) F3 (181694)	JEEP OPEL TOYOTA	**Cherokee** (10/01 > 02/08) **Omega A** (10/86 > 01/94) **Vectra A** (09/88 > 08/95) **Corolla** (08/87 > 04/92) **Hi-Ace** (1984 > 10/95)
116131	x1	650 / 26	Direct Fitting Montage ohne Adapter		LAND ROVER PEUGEOT	**Range Rover** (03/02 > 11/12) **607** (05/00 >)

Flat Blade OE connections

❶ = ❷ = ❸ = ❹ =

OE Flachwischer Verbindungssysteme

❺ = ❻ = ❼ = ❽ =

SWF	x1 / x2	mm/ inches			For/Für main applications / Hauptfahrzeuganwendungen	
▶ SWF - Das Original / HBlade® x1 (...)						
116133	x1	525 / 21	Direct Fitting Montage ohne Adapter		LAND ROVER PEUGEOT	**Discovery 2** (12/98 > 09/04) **607** (05/00 >)
116134	x1	530 / 21	8x3/9x3/9x4	**U** (180808)	BMW RENAULT SMART (MCC) VOLKSWAGEN	**3-Series** (03/96 > 03/00) **Clio 2** (03/98 > 05/09) **Fortwo 1** (03/98 > 03/07) **Golf 3** (11/91 > 12/95) **Transporter T4** (09/90 > 12/03)
116135	x1	600 / 24	9x3	D (181269)	MERCEDES	**C-Class (202)** (03/93 > 04/00) x1 **CLK-Class (208)** (01/97 > 12/01) x1 **E-Class (124)** (07/93 > 06/95) x1
116136	x1	530 / 21	9x4	T16 (580805)	AUDI SKODA VOLKSWAGEN	**A4 Avant** (02/95 > 01/99) **TT** (10/98 > 03/03) **Superb 1** (01/05 > 08/08) **New Beetle** (01/99 > 08/05) **Passat 5 / Variant** (10/96 > 05/02)
116137	x1	650 / 26	9x4	A (578085)	CITROËN RENAULT TOYOTA	**Xsara Picasso** (12/99 > 09/05) **Twingo 1** (03/93 > 05/07) x1 **Auris** (03/07 > 12/12) **Corolla Verso 1 / 2** (01/02 > 05/09) **Prius 2** (03/04 > 06/09)
116140	x1	700 / 28	9x4	**T8** (580803)	CHRYSLER DODGE FORD	**Voyager / Grand Voyager 3** (03/96 > 02/01) **Caravan** (03/96 > 02/01) **Transit 2000** (11/00 > 08/09)
116141	x1	575 / 23	9x3	**T2** (189336)	ALFA ROMEO FIAT LANCIA	**Alfa 145** (06/96 > 10/00) **Brava / Bravo** (09/95 > 10/01) **Marea** (09/96 >) **Punto 1** (03/93 > 09/99) **Y Ipsilon** (01/96 > 02/03)
116148	x1	600 / 24	9x4	**A** (578085)	BMW CITROËN LAND ROVER MERCEDES OPEL	**5-Series** (01/88 > 10/95) **C-Crosser** (07/07 >) **Range Rover** (12/12 >) **200 / 300** (01/88 > 06/93) x1 **Vectra C** (04/02 > 12/08)
116153	x1	650 / 26	9x4	**M10**	MERCEDES RENAULT	**V-Class** (09/96 > 08/03) **Vito** (09/95 > 08/03) **Avantime** (11/01 >) **Espace 3** (11/96 > 09/02)
116154	x1	550 / 22	9x4	**M10**	MERCEDES PEUGEOT	**V-Class** (09/96 > 08/03) **Vito** (09/95 > 08/03) **405** (06/87 > 11/95)
116162	x1	450 / 18	9x4	**M10**	RENAULT	**Avantime** (11/01 >) **Espace 3** (11/96 > 09/02)
116166	x1	550 / 22	8x3/9x3/9x4	**U** (180808)	AUDI BMW FIAT FORD PEUGEOT	**100** (12/90 > 07/94) **X3** (01/04 > 10/10) **Punto 2** (10/99 > 10/09) **Focus 1** (10/98 > 09/04) **306** (02/93 > 12/98)
116168	x1	640 / 25	9x3		MERCEDES	**E-Class** (07/95 > 02/02) x1
116172 – HBLADE –	x1	350 / 14	❽		HONDA HYUNDAI KIA SUZUKI	**Jazz 3** (11/08 >) **i 30** (03/12 >) **Santa Fe 3** (09/12 >) **Cee'd / Pro Cee'd** (05/12 >) **SX4 S-Cross** (09/13 >)
116174 – HBLADE –	x1	400 / 16	❽		MAZDA NISSAN TOYOTA	**Mazda 6** (03/08 > 12/12) **Qashqai** (02/14 >) **Auris** (03/07 > 12/12) **Prius 3** (07/09 >) **Rav 4** (03/06 > 03/13)

Flat Blade OE connections

❶ = ❷ = ❸ = ❹ =

◆ = O.E. SWF

OE Flachwischer Verbindungssysteme

❺ = ❻ = ❼ = ❽ =

1

SWF	x1 x2	mm/ inches			For/Für main applications / Hauptfahrzeuganwendungen	
▶ SWF - Das Original / HBlade® x1 (...)						
116176 – HBLADE –	x1	450 / 18	❽		CHEVROLET HONDA MAZDA MINI OPEL	**Cruze** (05/09 >) **Civic 9** (02/12 >) **Mazda 3** (12/13 >) **Mini One / Cooper / Cooper S** (03/14 >) **Insignia** (01/09 >)
116177 – HBLADE –	x1	480 / 19	❽		CHEVROLET MINI	**Malibu** (09/12 >) **Mini One / Cooper / Cooper S** (03/14 >)
116178 – HBLADE –	x1	500 / 20	❽		HONDA KIA LAND ROVER TOYOTA	**CR-Z** (05/10 >) **Sorento** (10/09 >) **Range Rover** (12/12 >) **Range Rover Sport 2** (09/13 >) **Land-Cruiser 150** (12/09 >)
116179 – HBLADE –	x1	525 / 21	❽		CHEVROLET CITROËN MITSUBISHI PEUGEOT	**Camaro** (01/09 >) **C4 Aircross** (04/12 >) **Outlander** (02/07 > 09/12) **4007** (07/07 >) **4008** (05/12 >)
116180 – HBLADE –	x1	550 / 22	❽		JEEP LEXUS	**Grand Cherokee** (09/13 >) **RX 350 / 450H** (06/09 >)
116183 – HBLADE –	x1	600 / 24	❽		CITROËN HYUNDAI LAND ROVER MAZDA TOYOTA	**C4 Aircross** (04/12 >) **i 20** (11/14 >) 5 **Range Rover** (12/12 >) **Mazda 6** (01/13 >) **Rav 4** (03/06 > 03/13)
116185 – HBLADE –	x1	650 / 26	❽		HONDA JEEP NISSAN TOYOTA	**Civic 9** (02/12 >) **Cherokee** (05/14 >) **Qashqai** (02/14 >) **X-Trail 3** (07/14 >) **Auris** (03/07 > 12/12)
116187 – HBLADE –	x1	700 / 28	❽		MITSUBISHI PEUGEOT TOYOTA	**i-Miev** (01/11 >) x1 **iOn** (01/11 >) x1 **Verso S** (03/11 >) x1 **Yaris 3** (09/11 >) 3 5 x1
116191	x1	550 / 22	9x4 9x4	**T16** (580805) T15	AUDI MERCEDES VOLVO	**A6** (06/94 > 12/94) **C-Class** (05/00 > 09/03) **S60** (11/00 > 02/04) **V70** (04/00 > 02/04) **XC90** (01/03 > 04/04)
116192	x1	475 / 19	9x4	**T16** (580805)	AUDI SEAT SKODA VOLKSWAGEN	**A3** (10/96 > 05/02) **Leon 1** (03/00 > 04/06) **Fabia 1** (05/00 > 04/07) **Golf 4** (11/97 > 06/02) **Polo 3** (07/94 > 10/01)
116194	x1	600 / 24	9x4	**T16** (580805)	VOLKSWAGEN	**Transporter T5** (11/03 >)
▶ SWF - Das Original Fast-Mover-Programme / Renner-Programm x2						
116218	x2	475 / 19 475 / 19	8x3/9x3/9x4	**U** (180808)	ALFA ROMEO FORD OPEL SUZUKI	**Alfa 33** (01/93 > 1995) **Fiesta 3** (03/89 > 09/95) **Ka StreetKa** (01/03 > 12/05) **Vectra B** (09/95 > 03/02) 4 **Grand Vitara XL7** (04/98 > 12/05)
116220	x2	500 / 20 500 / 20	8x3/9x3/9x4	**U** (180808)	BMW DACIA FORD NISSAN TOYOTA	**3-Series** (09/82 > 03/91) **Logan 1** (05/04 > 12/12) 4 **Escort 5 / 6 / 7** (09/90 >) 3 5 **Primera 1** (10/96 > 02/02) 4 **Land-Cruiser Station Wagon** (04/98 > 11/07)

Flat Blade OE connections

❶ = ❷ = ❸ = ❹ =

◆ = O.E. SWF

OE Flachwischer Verbindungssysteme

❺ = ❻ = ❼ = ❽ =

SWF	x1 x2	mm/ inches			For/Für main applications / Hauptfahrzeuganwendungen	
▶ SWF - Das Original Fast-Mover-Programme / Renner-Programm x2 (...)						
116222	x2	530 / 21 530 / 21	8x3/9x3/9x4	**U** (180808)	CITROËN FIAT FORD RENAULT VOLKSWAGEN	**Berlingo 1 / First** (01/97 > 05/08) **Ducato** (02/94 > 06/06) **Transit 3 / 4 / 5** (11/85 > 10/00) **Clio 2** (03/98 > 01/06) 3 5 **Transporter T4** (09/90 > 12/03)
116226	x2	450 / 18 450 / 18	8x3/9x3/9x4	**U** (180808)	DAEWOO OPEL PEUGEOT RENAULT	**Nexia** (03/95 > 1999) 4 **Astra F** (09/91 > 06/98) 3 5 **Corsa B** (03/93 > 09/00) 3 **205** (1983 >) **Clio 1** (06/90 > 02/94) 3 5
▶ SWF - Das Original x2 (≠ length / Länge)						
116301	x2	450 / 18 – SPOILER – 450 / 18	9x3 9x3	**T2** (189336) **T2** (189336)	OPEL VOLKSWAGEN	**Astra F** (09/91 > 06/98) 3 5 **Corsa B** (03/93 > 09/00) 3 **Tigra** (10/94 > 12/03) **Golf 2 GT / GTD / GTI / GLX** (08/83 > 10/91) **Passat 2** (09/80 > 03/88)
116304	x2	575 / 23 – SPOILER – 575 / 23	9x4 9x4	**M10** **M10**	SAAB	**9.5** (09/97 > 08/07)
116307	x2	500 / 20 450 / 18	9x3 9x3	**T2** (189336) **T2** (189336)	CITROËN HONDA PEUGEOT TOYOTA	**Saxo** (02/96 > 08/99) **Civic 6** (01/95 > 08/01) 3 **106** (09/91 > 02/04) **Corolla** (05/92 > 01/00) 3 5 **Rav 4 Funcruiser** (04/94 > 07/00) 3 5
116310	x2	530 / 21 475 / 19	9x3 9x3	**T2** (189336) **T2** (189336)	ALFA ROMEO MAZDA NISSAN SUBARU	**Alfa 155** (11/91 > 1997) **323** (02/97 >) **Almera** (07/95 > 02/00) **Primera 1** (02/90 > 09/96) **Legacy 2** (10/93 > 02/99)
116311	x2	530 / 21 – SPOILER – 475 / 19	8x3/9x3/9x4 8x3/9x3/9x4	**U** (180808) **U** (180808)	AUDI NISSAN TOYOTA VOLKSWAGEN	**A3** (05/02 > 05/03) **Primera 1** (02/90 > 09/96) 4 **Camry** (07/91 > 01/00) 4 **Golf 3** (11/91 > 04/99) 3 5 **Vento** (11/91 > 09/98)
116313	x2	530 / 21 – SPOILER – 500 / 20	8x3/9x3/9x4 8x3/9x3/9x4	**U** (180808) **U** (180808)	BMW FORD NISSAN VOLVO	**3-Series** (04/91 > 04/98) 4 **Mondeo 1 / 2** (01/93 > 09/96) **Primera 1** (10/96 > 02/02) 4 **S40 / V40** (04/96 > 01/04) **S70 / V70** (12/96 > 11/00)
116314	x2	530 / 21 – SPOILER – 530 / 21	8x3/9x3/9x4 8x3/9x3/9x4	**U** (180808) **U** (180808)	JEEP RENAULT VOLKSWAGEN VOLVO	**Grand Cherokee** (04/99 > 08/11) **Clio 2** (03/98 > 01/06) 3 5 **Passat 3 / 4** (04/88 > 09/96) 4 **Transporter T4** (09/90 > 12/03) **C70** (09/96 > 01/06)
116334	x2	650 / 26 570 / 23	Direct Fitting Montage ohne Adapter		BMW	**5-Series** (11/95 > 04/03) 4 **M5** (10/98 > 05/04) 4
116335	x2	500 / 20 – SPOILER – 475 / 19	8x3/9x3/9x4 8x3/9x3/9x4	**U** (180808) **U** (180808)	OPEL VAUXHALL	**Astra G** (04/98 > 08/04) 3 5 **Astra Mk.IV** (04/98 > 08/04) 3 5
116336	x2	680 / 27 650 / 26	9x4 9x4	**M6** **M6**	FORD SEAT VOLKSWAGEN	**Galaxy 1** (08/95 > 05/01) **Alhambra 1** (03/96 > 05/01) **Sharan 1** (08/95 > 05/01)
116337	x2	600 / 24 600 / 24	9x4 9x4	T16 (580805) T16 (580805)	OPEL VAUXHALL	**Meriva A** (04/03 > 05/10) **Zafira A** (03/99 > 06/05) **Meriva Mk.I** (04/03 > 05/10) **Zafira Mk.I** (03/99 > 06/05)
116339	x2	550 / 22 – SPOILER – 500 / 20	9x4 9x4	**A** (578085) **A** (578085)	BMW	**3-Series** (05/98 > 02/05) 4 **M3** (12/00 > 09/06)

Flat Blade OE connections

❶ = ❷ = ❸ = ❹ =

◆ = O.E. SWF

OE Flachwischer Verbindungssysteme

❺ = ❻ = ❼ = ❽ =

1

SWF	x1 x2	mm/ inches			For/Für main applications / Hauptfahrzeuganwendungen	
▶ SWF - Das Original x2 (≠ length / Länge) (...)						
116340	x2	600 / 24 – SPOILER – 525 / 21	9x4 9x4	**M10** **M10**	NISSAN OPEL RENAULT VAUXHALL	**Primastar** (03/02 >) **Vivaro** (06/01 >) **Laguna 2** (01/01 > 09/07) **Trafic** (06/01 > 08/14) **Vivaro** (06/01 >)
116341	x2	600 / 24 600 / 24	9x4 9x4	**M10** **M10**	IVECO NISSAN OPEL RENAULT	**Daily / Daily City** (06/99 >) **Interstar** (02/02 > 09/11) **Movano** (09/98 > 04/10) **Espace 2** (03/91 > 10/96) **Master 2** (11/97 > 03/10)
116342	x2	550 / 22 550 / 22	Direct Fitting Montage ohne Adapter		AUDI	**A4** (02/01 > 10/03)
116343	x2	550 / 22 550 / 22	Direct Fitting Montage ohne Adapter		AUDI	**A4 (8E2,B6)** (02/01 > 10/03) **A4 (8E5,B6) Avant** (10/01 > 10/03)
116346	x2	600 / 24 – SPOILER – 450 / 18 – SPOILER –	9x4 9x4	**M10** **M10**	CITROËN RENAULT	**C2** (09/03 >) **C3 / C3 Classic** (04/02 > 01/11) **Laguna 1** (02/94 > 06/96) **Mégane 2** (06/03 > 12/05)
116348	x2	550 / 22 – SPOILER – 550 / 22	9x4 9x4	**T16** (580805) **T16** (580805)	AUDI PORSCHE	**A6** (06/94 > 05/01) **A8** (06/94 > 12/98) **911** (03/96 > 03/04) **Boxster** (01/96 > 10/04) **Boxster** (11/04 > 04/12)
116351	x2	530 / 21 – SPOILER – 475 / 19	8x3/9x3/9x4 9x4	**U** (180808) **T16** (580805)	AUDI SEAT SKODA VOLKSWAGEN	**A3** (10/96 > 05/02) **Leon 1** (03/00 > 04/06) **Fabia 1** (05/00 > 04/07) **Bora** (10/98 > 06/02) **Golf 4** (11/97 > 06/02)
116352	x2	650 / 26 – SPOILER – 650 / 26 – SPOILER –		**M2** **M2**	CITROËN FIAT LANCIA PEUGEOT	**C8** (06/02 > 08/05) **Ulysse** (06/02 > 08/05) **Phedra** (06/02 > 08/05) **807** (06/02 > 08/05)
116365	x2	700 / 28 – SPOILER – 650 / 26 – SPOILER –	9x4 9x4	**T15** **T15**	MERCEDES	**Viano** (09/03 > 10/05) **Vito** (09/03 > 10/05)
116366	x2	530 / 21 – SPOILER – 530 / 21	9x4 9x4	**T16** (580805) **T16** (580805)	AUDI SKODA VOLKSWAGEN	**TT** (10/98 > 03/03) **Superb 1** (01/05 > 08/08) **New Beetle** (01/99 > 08/05) **Passat 5** (10/96 > 05/02)
▶ SWF - Das Original rear blade program / Heckwischer-Programm						
116500	x1	260 / 10	Direct Fitting Montage ohne Adapter		RENAULT SMART (MCC)	**Modus** (09/04 > 05/05) **Mégane 2 Estate** (06/03 > 05/09) **Scénic 2** (01/05 > 05/09) **Fortwo 2** (03/07 >)
116505	x1	240 / 10	Direct Fitting Montage ohne Adapter		PEUGEOT RENAULT	**308** (09/13 >) **Mégane 2** (09/02 > 12/05)
116506 ◆	x1	240 / 10	Direct Fitting Montage ohne Adapter		MINI	**Mini One / Cooper / Cooper S** (03/14 >) **Mini Countryman** (10/10 >)
116510	x1	300 / 12	Direct Fitting Montage ohne Adapter		CITROËN PEUGEOT RENAULT TOYOTA	**C1** (06/05 > 05/14) **107** (06/05 > 05/14) **Twingo 1** (03/93 > 05/07) **Aygo** (06/05 > 05/14) **Yaris** (02/01 > 12/05)
116513	x1	300 / 12	Direct Fitting Montage ohne Adapter		DAIHATSU KIA SUZUKI TOYOTA	**Terios** (05/06 > 2013) **Rio** (07/11 >) **Grand Vitara 2** (09/05 >) **Avensis** (04/03 > 11/08) **Rav 4** (03/06 > 03/13)

Flat Blade OE connections

❶ = ❷ = ❸ = ❹ =

OE Flachwischer Verbindungssysteme

❺ = ❻ = ❼ = ❽ =

◆ = O.E. SWF

SWF	x1 x2	mm/ inches			For/Für main applications / Hauptfahrzeuganwendungen	
SWF - Das Original rear blade program / Heckwischer-Programm (...)						
116514	x1	300 / 12	Direct Fitting Montage ohne Adapter		OPEL VAUXHALL	**Astra J Sports Tourer** (01/11 >) **Astra J GTC** (11/11 >) **Astra J** (01/10 >) **Astra Mk.VI** (01/10 >) **Astra Mk.VI Sports Tourer** (01/10 >)
116515	x1	300 / 12	Direct Fitting Montage ohne Adapter		CITROËN MITSUBISHI NISSAN PEUGEOT	**C-Crosser** (07/07 >) **Outlander** (02/07 > 09/12) **Micra** (11/10 >) **Pathfinder** (09/97 > 12/04) **4007** (07/07 >)
116516	x1	310 / 12	Direct Fitting Montage ohne Adapter		CITROËN FORD NISSAN RENAULT TOYOTA	**C4** (11/04 > 09/10) **Fiesta 6** (10/08 >) **Qashqai** (03/07 > 01/14) **Scénic 3** (04/09 >) **Yaris 2** (01/06 > 08/11)
116518 ◆ NEW	x1	400 / 16	Direct Fitting Montage ohne Adapter		CITROËN FIAT FORD PEUGEOT VOLVO	**Jumpy 2** (01/07 > 05/16) **Scudo 2** (01/07 > 06/16) **Grand C-Max** (10/10 >) **Expert 2** (01/07 > 05/16) **C30** (07/09 > 12/13)
116520	x1	300 / 12	Direct Fitting Montage ohne Adapter		FIAT MERCEDES OPEL RENAULT	**Grande Punto** (11/05 >) **A-Class** (09/04 > 08/12) **B-Class** (05/05 > 10/11) **Corsa D** (09/06 >) **Clio 2** (03/98 > 01/06)
116530	x1	290 / 11	Direct Fitting Montage ohne Adapter		CITROËN FIAT MERCEDES MINI OPEL	**C2** (09/03 >) **500** (07/07 >) **C-Class (204)** (12/07 > 03/13) **Mini One / Cooper / Cooper S** (03/04 > 04/12) **Astra G** (04/98 > 08/04)
116531	x1	345 / 14	Direct Fitting Montage ohne Adapter		HONDA MAZDA NISSAN SUBARU	**CR-V** (01/07 > 09/12) **Jazz 3** (11/08 >) **Mazda 2** (10/07 >) **X-Trail 2** (07/07 > 06/14) **Impreza / WRX / STI** (10/07 >)
116532	x1	345 / 14	Direct Fitting Montage ohne Adapter		HYUNDAI MAZDA TOYOTA	**Santa Fe 2** (04/06 > 08/12) **CX-5** (03/12 >) **Mazda 3** (04/09 > 10/13) **Mazda 6** (03/08 > 12/12) **Land-Cruiser** (01/03 > 12/09)
116533	x1	345 / 14	Direct Fitting Montage ohne Adapter		OPEL	**Zafira C Tourer** (11/11 >)
116540	x1	350 / 14	Direct Fitting Montage ohne Adapter		DACIA OPEL PEUGEOT RENAULT	**Logan 1 MCV** (01/07 > 11/12) **Zafira B** (07/05 >) **206** (09/98 > 03/09) **307** (05/01 > 09/04) **Clio 3** (09/05 >)
116546	x1	350 / 14	Direct Fitting Montage ohne Adapter		CITROËN PEUGEOT RENAULT	**C4 Picasso** (10/06 >) **206 SW** (06/02 > 07/07) **406** (11/96 > 04/04) **Kangoo 2** (01/08 >) **Mégane 3** (11/08 >)
116547 ◆ NEW	x1	350 / 14	Direct Fitting Montage ohne Adapter		BMW FORD RENAULT VOLVO	**5-Series (E61) Touring** (04/04 > 08/10) **Focus 2** (10/04 > 08/05) **Laguna 1 Nevada** (09/95 > 12/00) **V50** (03/04 > 02/06) **V50** (03/06 > 12/12)
116548 ◆ NEW	x1	500 / 20	Direct Fitting Montage ohne Adapter		FORD RENAULT	**Fiesta 4** (10/95 > 04/02) **Laguna 3** (10/07 > 10/15) **Mégane 1** (10/95 > 09/02)

Flat Blade OE connections

❶ = ❷ = ❸ = ❹ =

OE Flachwischer Verbindungssysteme

❺ = ❻ = ❼ = ❽ =

◆ = O.E. SWF

1

SWF	x1 x2	mm/ inches			For/Für main applications / Hauptfahrzeuganwendungen	
SWF - Das Original rear blade program / Heckwischer-Programm (...)						
116550	x1	400 / 16	Direct Fitting Montage ohne Adapter		CITROËN OPEL PEUGEOT RENAULT	**Xsara Picasso** (12/99 >) **Corsa C** (10/00 > 08/06) **Zafira A** (03/99 > 06/05) **306** (01/99 >) 3 5 **Clio 1** (03/94 > 02/98) 3 5
116555	x1	400 / 16	Direct Fitting Montage ohne Adapter		PEUGEOT	**207** (04/06 > 03/12) 3 5 **207 +** (09/12 >) 3 5
116570	x1	500 / 20	Direct Fitting Montage ohne Adapter		CITROËN NISSAN RENAULT	**C5 1** (03/01 > 02/03) 5 **Primera 2** (06/03 > 10/06) 5 **Laguna 2** (01/01 > 09/07) 5
SWF - Das Original Spoiler x1						
116601	x1	400 / 16 – SPOILER –	8x3/9x3/9x4	**U** (180808)	FORD MERCEDES OPEL VOLKSWAGEN	**Fiesta 2** (09/83 > 02/89) **G-Class (460)** (03/79 > 08/92) **Corsa A** (10/82 > 02/93) **Golf 2 C / CL / GL** (08/83 > 10/91) **Passat 1** (05/73 > 08/80)
116602	x1	450 / 18 – SPOILER –	8x3/9x3/9x4	**U** (180808)	BMW MINI OPEL RENAULT VOLKSWAGEN	**5-Series** (07/81 > 12/87) **Mini One / Cooper / Cooper S** (09/01 > 02/04) 3 **Astra F** (09/91 > 06/98) 3 5 **Clio 1** (06/90 > 02/94) 3 5 **Passat 2** (09/80 > 03/88)
116604	x1	500 / 20 – SPOILER –	8x3/9x3/9x4	**U** (180808)	BMW FIAT NISSAN OPEL TOYOTA	**3-Series** (09/82 > 03/91) **Croma 1** (10/85 >) **Micra** (10/92 > 08/00) 3 5 **Corsa C** (10/00 > 08/06) **Rav 4 Funcruiser** (04/94 > 07/00) 3 5
116606	x1	550 / 22 – SPOILER –	8x3/9x3/9x4	**U** (180808)	ALFA ROMEO AUDI FORD RENAULT	**Alfa 147** (10/00 > 07/05) **A6 Avant** (01/95 > 09/01) **Focus 1** (10/98 > 02/05) 4 **Mondeo 3** (01/01 > 05/07) 4 **Mégane 1** (10/95 > 09/02) 5
116607	x1	530 / 21 – SPOILER –	8x3/9x3/9x4	**U** (180808)	AUDI BMW RENAULT VOLKSWAGEN VOLVO	**A4** (06/94 > 01/99) 4 **3-Series** (04/91 > 04/98) 4 **Clio 2** (03/98 > 05/09) 3 5 **Golf 3** (11/91 > 12/95) 3 5 **S40/V40** (04/96 > 01/04)
116612	x1	600 / 24 – SPOILER –	9x4 9x4	**T15** T5 (580801)	HONDA MERCEDES OPEL SAAB VOLKSWAGEN	**Civic 7** (04/01 > 12/05) 5 **C-Class** (05/00 > 09/03) **Omega B** (02/94 > 11/03) **9.5** (09/97 > 08/07) **Transporter T5** (11/03 >)
116615	x1	600 / 24 – SPOILER –	9x4	T5 (580801)	BMW CITROËN RENAULT	**7-Series** (06/94 > 10/01) **Xantia** (01/98 >) 5 **Laguna 1** (02/94 > 06/96) 5
116616	x1	600 / 24 – SPOILER –	9x4	**T9** (184537)	BMW RENAULT	**5-Series** (01/88 > 10/95) 4 **7-Series** (09/86 > 05/94) **7-Series** (06/94 > 10/01) **8-Series** (09/89 >) **Safrane** (03/92 > 12/98)
116618	x1	650 / 26 – SPOILER –	9x4 9x4	**T9** (184537) T16 (580805)	CITROËN MERCEDES NISSAN PEUGEOT	**C5 1** (03/01 > 02/03) 5 **A-Class** (09/97 > 08/04) **Primera 2** (03/02 > 10/06) 4 **206** (09/98 > 03/09) 3 5 **307** (05/01 > 09/04) 3 5
116619	x1	600 / 24 – SPOILER –	9x4 9x4	**T9** (184537) T5 (580801)	BMW OPEL RENAULT VOLVO	**X5** (05/00 > 02/07) **Vectra C** (04/02 > 12/08) 4 **Mégane 2** (09/02 > 12/05) 3 5 **S60 / V70** (11/00 > 02/04) **XC90** (01/03 > 04/04)

Flat Blade OE connections

❶ = ❷ = ❸ = ❹ =

OE Flachwischer Verbindungssysteme

❺ = ❻ = ❼ = ❽ =

◆ = O.E. SWF

SWF	x1 x2	mm/ inches			For/Für main applications / Hauptfahrzeuganwendungen	
SWF - Das Original Spoiler x1 (...)						
116622	x1	700 / 28 – SPOILER –	9x4	**T15**	PEUGEOT	**307** (05/01 > 09/04)
116623	x1	475 / 19 – SPOILER –	8x3/9x3/9x4	**U** (180808)	FORD SUZUKI TOYOTA VOLKSWAGEN	**Fiesta 3 / 4** (03/89 > 04/02) **Ka 1** (10/96 > 10/08) **Grand Vitara 2** (09/05 >) **Land-Cruiser 90** (08/96 > 12/02) **Polo 3** (07/94 > 10/01)
SWF - VisioFlex® Flat Blade Original Equipment / Flachwischer Erstausrüstung						
119251	x2	475 / 19 475 / 19	❶		VOLKSWAGEN	**Lupo GTI** (11/00 >)
119252 ◆	x2	500 / 20 500 / 20	❶		MERCEDES	**SLS AMG Coupé** (10/10 >)
119253 ◆	x2	550 / 22 550 / 22	❷		CADILLAC CHEVROLET GMC	**Escalade / ESV / EXT** (02/06 > 10/10) **Suburban** (01/07 > 12/07) **Tahoe** (01/07 > 12/07) **Denali / Denali XL** (01/07 > 12/07) **Yukon / Yukon XL** (01/07 > 12/07)
119254 ◆	x2	580 / 23 450 / 18	❷		JAGUAR	**XJ Series XJ / XJR** (05/10 >)
119255 ◆	x2	550 / 22 450 / 18	❷		BMW	**1-Series** (09/11 >) **2-Series** (03/14 >) **M2** (03/14 >)
119256	x2	580 / 23 530 / 21	❻		LAND ROVER	**Evoque** (09/11 >) **Range Rover Evoque** (09/11 >)
119257 ◆	x2	475 / 19 500 / 20	❷		MINI	**Mini Paceman** (01/13 >) **Mini Countryman** (10/10 >)
119258	x2	550 / 22 550 / 22	❻		VOLKSWAGEN	**Beetle / Coccinelle** (12/11 >)
119259 ◆	x2	550 / 22 550 / 22	❻		AUDI	**A6** (05/04 > 03/11) **A6 Allroad Quattro** (06/06 > 02/12)
119260 ◆	x2	600 / 24 380 / 15	❻		AUDI SEAT SKODA VOLKSWAGEN	**A1** (09/10 >) **Mii** (04/12 >) **Citigo** (05/12 >) **Polo 6** (09/09 >) **Up** (01/12 >)
119261 ◆	x2	600 / 24 475 / 19	❻		VOLKSWAGEN	**Jetta** (01/11 >) **Golf 6** (06/11 >) **Passat 7** (09/11 >)
119262	x2	600 / 24 380 / 15	❻		FIAT LANCIA	**Panda 3** (03/12 >) **Ypsilon** (06/11 >)
119263 ◆	x2	450 / 18 485 / 19	❸		MINI	**Mini One / Cooper / Cooper S** (05/12 > 02/14) **Mini** (05/12 >) **Mini Clubman** (05/12 >) **Mini Clubvan** (09/12 >)
119264 ◆	x2	650 / 26 475 / 19	❷		MERCEDES	**B-Class** (11/11 >)
119265	x2	650 / 26 400 / 16	❻		OPEL PEUGEOT	**Adam** (03/13 >) **Adam Rocks** (08/14 >) **208** (04/12 >) **2008** (04/13 >)
119267	x2	530 / 21 580 / 23	❻		PORSCHE	**911** (09/11 >) **911 Targa** (05/14 >) **Boxster** (05/12 >) **Cayman** (03/13 >)
119268 ◆	x2	600 / 24 500 / 20	❻		BMW	**X5** (10/11 > 10/13) **X6** (10/11 >)
119269 ◆	x2	650 / 26 350 / 14	❸		RENAULT	**Captur** (04/13 >) **Clio 4** (10/12 >)
119270	x2	600 / 24 450 / 18	❻		SKODA	**Octavia 3** (03/13 >)

Flat Blade OE connections

❶ = ❷ = ❸ = ❹ =

OE Flachwischer Verbindungssysteme

❺ = ❻ = ❼ = ❽ =

◆ = O.E. SWF

1

SWF	x1 x2	mm/ inches			For/Für main applications / Hauptfahrzeuganwendungen	
▶ SWF - VisioFlex® Flat Blade Original Equipment / Flachwischer Erstausrüstung (...)						
119271	x2	650 / 26 400 / 16	❻		SEAT	**Leon 3** (01/13 >) **Leon 3 ST X-Perience** (01/15 >)
119272	x2	650 / 26 450 / 18	❻		AUDI VOLKSWAGEN	**A3** (09/12 >) 3 **Golf 7** (11/12 >) 3 5
119273	x2	650 / 26 475 / 19	❻		VOLKSWAGEN	**Passat 8** (11/14 >) **Passat 8 Variant / SW** (11/14 >)
119274	x2	650 / 26 450 / 18	❶		BMW	**5-Series** (03/10 >) 4 **7-Series** (11/08 >) **M5** (12/11 >) 4
119275	x2	600 / 24 600 / 24	❶		MERCEDES	**C-Class** (04/07 > 12/08) 4
119276 ◆	x2	600 / 24 475 / 19	❷		AUDI	**A3** (04/08 > 01/14)
119277 ◆	x2	600 / 24 450 / 18	❷		BMW	**4-Series** (10/13 >) **4-Series Gran Coupé** (06/14 >) **M4** (03/14 >)
119278 ◆	x2	650 / 26 350 / 14	❻		CHEVROLET FIAT NISSAN OPEL	**Trax** (03/13 >) **500 L Trekking** (10/12 >) **500 X** (02/15 >) **Pulsar** (09/14 >) **Mokka** (10/12 >)
119280 ◆	x2	600 / 24 590 / 24	❷		BMW	**6-Series** (01/04 > 02/11) **M6** (01/04 > 02/11)
119281 ◆	x2	650 / 26 650 / 26	❻		CHEVROLET OPEL PEUGEOT	**Volt** (01/11 >) **Ampera** (11/11 >) **Astra J** (01/10 >) 5 **Astra J Sports Tourer** (01/11 >) **508** (02/11 >)
119282 ◆	x2	650 / 26 500 / 20	❶		BMW	**X3** (11/10 >) **X4** (07/14 >)
119283 ◆	x2	600 / 24 400 / 16	❷		BMW	**3-Series** (10/09 >) **M3** (10/09 >)
119284 ◆	x2	600 / 24 475 / 19	❷		BMW MERCEDES	**3-Series** (10/09 > 01/12) 4 **M3** (10/09 >) 4 **X1** (10/09 >) **A-Class** (09/12 >) 5 **CLA / GLA -Class** (04/13 >) 4
119285 ◆	x2	500 / 20 450 / 18	❸		RENAULT	**Clio 2 Campus** (06/09 > 08/11)
119286	x2	550 / 22 475 / 19	❶		MERCEDES	**GLK-Class** (09/08 >)
119287	x2	600 / 24 400 / 16	❸		RENAULT	**Mégane 3** (11/08 >)
119288	x2	600 / 24 475 / 19	❷		RENAULT	**Koleos** (06/08 >)
119289	x2	550 / 22 380 / 15	❻		FIAT LANCIA	**Idea** (04/08 >) **Musa** (11/07 >)
119290	x2	600 / 24 350 / 14	❻		FIAT FORD RENAULT	**500 / 500C** (07/07 >) **Ka 2** (11/10 >) **Zoé** (12/12 >)
119291 ◆	x2	600 / 24 400 / 16	❶		BMW	**3-Series** (09/06 > 09/09) **M3** (09/07 > 09/09)
119292 ◆	x2	550 / 22 530 / 21	❷		AUDI	**TT** (09/06 >)
119293	x2	550 / 22 550 / 22	❽		LAND ROVER MERCEDES RENAULT	**Discovery 3 / 4** (10/04 >) **Range Rover Sport** (05/05 > 08/13) **Citan** (10/12 >) **Kangoo 2** (01/08 >)

Flat Blade OE connections

❶ = ❷ = ❸ = ❹ = ❺ = ❻ = ❼ = ❽ =

◆ = O.E. SWF

OE Flachwischer Verbindungssysteme

SWF	x1 x2	mm/ inches			For/Für main applications / Hauptfahrzeuganwendungen	
SWF - VisioFlex® Flat Blade Original Equipment / Flachwischer Erstausrüstung (...)						
119294 ◆	x2	600 / 24 500 / 20	❷		LAND ROVER	**Freelander 2** (12/06 >)
119296 ◆	x2	600 / 24 500 / 20	❻		AUDI VOLKSWAGEN	**A5** (06/07 > 12/07) **Tiguan** (11/07 >)
119297 ◆	x2	600 / 24 500 / 20	❻		AUDI	**A4** (01/08 >) **A5** (01/08 >) **Q3** (10/11 >) **Q5** (11/08 >)
119298	x2	600 / 24 450 / 18	❻		FIAT HYUNDAI KIA LANCIA SKODA	**Bravo** (03/07 >) **i 30** (06/07 > 2011) 3 5 **Cee'd / Pro Cee'd** (12/06 > 09/09) 3 5 **Delta** (07/08 >) 5 **Superb 2** (09/08 >)
119299	x2	600 / 24 600 / 24	❶		MERCEDES	**C-Class** (01/09 > 03/13) 4 **CLS-Class** (01/11 >) **E-Class** (05/09 > 02/13)
119300 ◆	x2	600 / 24 380 / 15	❷		NISSAN	**Qashqai** (03/07 > 01/14)
119301	x2	530 / 21 475 / 19	❻		SEAT VOLKSWAGEN	**Ibiza** (04/06 > 05/08) **Cordoba 5** (04/06 > 12/09) **Polo 5** (07/05 > 08/09)
119303 ◆	x2	530 / 21 530 / 21	❻		SKODA	**Fabia 2** (05/07 >) **Praktik** (06/07 >) **Roomster** (07/06 >)
119304 ◆	x2	500 / 20 350 / 14	❸		RENAULT SMART (MCC)	**Twingo 3** (09/14 >) **Fortwo** (11/14 >) **Forfour** (11/14 >)
119305	x2	600 / 24 475 / 19	❻		VOLKSWAGEN	**Golf 5** (12/05 > 09/08) **Golf 6** (10/08 > 10/12) **Passat 6** (03/05 > 10/10) **Scirocco** (09/08 >) **Touran 1** (12/06 > 08/10)
119308 ◆	x2	580 / 23 580 / 23	❷		CADILLAC SAAB	**BLS** (10/07 >) **9.3 Aero** (10/07 >)
119311 ◆	x2	630 / 25 630 / 25	❷		IVECO	**Daily** (06/14 >)
119312 ◆	x2	600 / 24 475 / 19	❶		BMW	**3-Series** (03/05 > 09/09) 4 **M3** (04/08 > 09/09) 4
119313 ◆	x2	550 / 22 475 / 19	❸		DACIA RENAULT	**Logan 2** (03/15 >) 4 **Logan 2 MCV** (03/15 >) **Sandero / Stepway 2** (03/15 >) 5 **Symbol** (03/15 >) 4
119314 ◆	x2	600 / 24 400 / 16			SKODA	**Fabia 3** (11/14 >) 5 **Fabia 3 Combi** (01/15 >)
119315 ◆	x2	530 / 21 530 / 21	❶		AUDI	**TT** (03/03 > 08/06)
119316 ◆	x2	500 / 20 500 / 20	❷		BMW	**1-Series** (03/07 > 12/11)
119318 ◆	x2	500 / 20 500 / 20	❷		BMW	**1-Series** (03/07 > 12/11)
119319	x2	530 / 21 475 / 19	❶		MAZDA VOLKSWAGEN	**Mazda 3** (04/05 > 03/09) 4 **Bora** (07/02 > 08/05) 4 **Golf 4** (07/02 > 10/03) 3 5 **Polo 4** (11/01 > 06/05)
119321	x2	530 / 21 530 / 21	❶		SKODA VOLKSWAGEN	**Superb 1** (04/02 > 01/05) **Passat 5** (06/02 > 02/05) 4
119322 ◆	x2	530 / 21 530 / 21	❶		AUDI	**TT** (03/03 > 08/06)

Flat Blade OE connections

❶ = ❷ = ❸ = ❹ = ❺ = ❻ = ❼ = ❽ =

◆ = O.E. SWF

OE Flachwischer Verbindungssysteme

1

SWF	x1 x2	mm/ inches			For/Für main applications / Hauptfahrzeuganwendungen	
▶ SWF - VisioFlex® Flat Blade Original Equipment / Flachwischer Erstausrüstung (...)						
119323 ◆	x2	550 / 22 550 / 22	❹		AUDI SEAT	**A4** (11/03 > 12/07) **A6** (06/01 > 04/04) **A6 Allroad** (10/01 > 07/05) **Exeo** (03/09 > 09/13)
119324 ◆	x2	560 / 22 560 / 22	❷		MERCEDES	**SLK-Class** (03/04 >)
119325	x2	530 / 21 475 / 19	❶		MAZDA VOLKSWAGEN	**Mazda 3** (04/05 > 03/09) **Bora** (07/02 > 08/05) **Golf 4** (07/02 > 10/03) **Polo 4** (11/01 > 06/05)
119326	x2	530 / 21 530 / 21	❶		SKODA VOLKSWAGEN	**Superb 1** (04/02 > 01/05) **Passat 5** (06/02 > 02/05)
119327 ◆	x2	550 / 22 580 / 23	❹		AUDI	**A4 (8H7)** (04/02 > 05/09)
119328	x2	550 / 22 450 / 18	❶		OPEL	**Astra H** (04/04 > 12/09)
119329 ◆	x2	600 / 24 600 / 24	❹		BENTLEY	**Arnage / Arnage T** (10/04 > 2009) **Azure / Azure T** (04/06 > 2011) **Continental** (03/05 >)
119330 ◆	x2	600 / 24 400 / 16	❸		CITROËN PEUGEOT RENAULT	**C3 Picasso** (05/10 >) **DS3** (03/10 >) **301** (11/12 >) **Clio 3** (09/05 >)
119332 ◆	x2	600 / 24 450 / 18	❸		RENAULT	**Mégane 2** (01/06 > 10/08)
119334 ◆	x1	650 / 26	❷		CITROËN PEUGEOT TOYOTA	**C1** (06/14 >) x1 **108** (06/14 >) x1 **Aygo** (06/14 >) x1
119335 ◆	x2	750 / 30 750 / 30	❷		FORD	**Tourneo Connect** (12/13 >) **Transit Connect** (12/13 >)
119336 ◆	x2	680 / 27 680 / 27	❷		FORD	**Mondeo 4** (12/14 >) **Mondeo 4 SW** (12/14 >)
119339 ◆	x2	630 / 25 560 / 22	❷		MERCEDES	**S-Class (222)** (09/13 >)
119340	x2	600 / 24 600 / 24	❻		VOLKSWAGEN	**Multivan / California T5** (08/13 >) **Transporter T5** (09/13 >)
119348	x2	600 / 24 600 / 24	❻		MERCEDES	**C-Class** (03/13 >) **CLS-Class** (04/14 >) **CLS-Class Shooting Brake** (04/14 >) **E-Class** (03/13 >) **E-Class** (04/14 >)
119349	x2	550 / 22 475 / 19	❻		JEEP MERCEDES	**Renegade** (10/14 >) **GLK-Class** (03/14 >)
119350 ◆	x2	550 / 22 580 / 23	❹		AUDI	**A4** (04/02 > 05/09)
119351	x2	650 / 26 425 / 17	❶		BMW	**6-Series** (03/11 >) **6-Series Gran Coupé** (06/12 >)
119352 ◆	x2	650 / 26 380 / 15	❷		CHEVROLET	**Aveo (T300)** (06/11 >) **Aveo (T300)** (04/11 >)
119353 ◆	x2	560 / 22 560 / 22	❹		MERCEDES	**C-Class** (10/03 > 03/07) **CLC-Class** (06/08 > 06/10) **CLK-Class** (05/02 > 04/09)
119354 ◆	x2	560 / 22 560 / 22	❷		MERCEDES	**SLK-Class** (03/04 >)
119355	x2	600 / 24 475 / 19	❶		AUDI SKODA VOLKSWAGEN	**A3** (06/03 > 08/04) **Octavia 2** (06/04 > 02/13) **Caddy 3 Caddy Life** (04/04 > 08/10) **Golf 5** (11/03 > 11/05) **Touran 1** (03/06 > 11/06)

Flat Blade OE connections

❶ = ❷ = ❸ = ❹ =

◆ = O.E. SWF

OE Flachwischer Verbindungssysteme

❺ = ❻ = ❼ = ❽ =

SWF	x1 x2	mm/ inches			For/Für main applications / Hauptfahrzeuganwendungen	
▶ SWF - VisioFlex® Flat Blade Original Equipment / Flachwischer Erstausrüstung (...)						
119356 ◆	x2	600 / 24 550 / 22	❷		VOLVO	**S80** (06/03 > 05/06) **S60** (03/04 > 06/10) **V70** (04/04 > 09/07) **XC70** (03/04 > 09/07) **XC90** (05/04 >)
119357 ◆	x2	600 / 24 580 / 23	❼		BMW	**5-Series** (05/03 > 02/10) 4 **M5** (01/05 > 02/10) 4
119358 ◆	x2	580 / 23 590 / 24	❹		AUDI	**A8** (12/02 > 03/10)
119359 ◆	x2	600 / 24 550 / 22	❷		VOLVO	**S80** (06/03 > 05/06) **S60** (03/04 > 06/10) **V70** (04/04 > 09/07) **XC70** (03/04 > 09/07) **XC90** (05/04 >)
119360 ◆	x2	600 / 24 600 / 24	❶		VOLKSWAGEN	**Multivan / California T5** (06/03 > 01/13)
119361 ◆	x2	600 / 24 600 / 24	❶		VOLKSWAGEN	**Multivan / California T5** (06/03 > 01/13)
119362	x2	550 / 22 400 / 16	❶		ALFA ROMEO	**Alfa 147** (08/05 >) **Coupe GT** (07/05 >)
119363 ◆	x2	600 / 24 475 / 19	❷		AUDI	**A3** (09/04 > 08/12) 5
119364 ◆	x2	600 / 24 475 / 19	❷		AUDI	**A3 (8P1)** (09/04 > 08/12) 3 **A3 (8PA) Sportback** (09/04 > 01/13) 5
119365	x2	650 / 26 400 / 16			TOYOTA	**Avensis** (12/08 >) 4
119367	x2	550 / 22 475 / 19	❷		FIAT	**Stilo** (06/06 > 06/07) 3 5 **Stilo MultiWagon** (06/06 > 06/07)
119369	x2	580 / 23 450 / 18	❶		ALFA ROMEO	**Alfa 159** (09/05 >) 4 **Brera** (10/05 >) **Spider** (04/06 >)
119370 ◆	x2	550 / 22 550 / 22	❹		AUDI SEAT	**A4** (11/03 > 12/07) 4 **A6** (06/01 > 04/04) 4 **A6 Allroad** (10/01 > 07/05) **Exeo** (03/09 > 09/13) 4
119371	x2	600 / 24 425 / 17	❶		FIAT	**Croma 2** (10/05 > 01/11)
119372 ◆	x2	600 / 24 550 / 22	❷		FIAT	**Multipla** (05/06 > 06/10)
119374 ◆	x2	600 / 24 500 / 20	❶		BMW	**X5** (03/07 > 09/11) **X6** (05/08 > 09/11)
119375 ◆	x2	560 / 22 560 / 22	❹		MERCEDES	**C-Class** (10/03 > 03/07) 4 **CLC-Class** (06/08 > 06/10) **CLK-Class** (05 /02 > 04/09)
119376 ◆	x2	580 / 23 475 / 19	❷		JAGUAR	**XF / XFR** (03/08 >) **XF Sportbrake** (01/13 >)
119378	x2	600 / 24 400 / 16	❻		CITROËN FIAT FORD RENAULT SEAT	**C3 Picasso** (03/09 > 04/10) **Doblo** (01/10 >) **Kuga 1** (06/08 > 12/12) **Twingo 2** (06/07 >) 3 **Ibiza SC / ST** (06/08 >) 3 5
119380 ◆	x2	650 / 26 550 / 22	❺		RENAULT	**Scénic 2** (05/03 > 12/04)
119381 ◆	x2	650 / 26 650 / 26	❶		MERCEDES PORSCHE VOLKSWAGEN	**CLS-Class** (10/04 > 12/10) **E-Class** (02/02 > 02/09) **Cayenne** (11/07 >) **Touareg 1** (10/07 >)
119382 ◆	x2	700 / 28 600 / 24	❷		PEUGEOT	**307 CC** (07/03 > 03/05)

Flat Blade OE connections

❶ = ❷ = ❸ = ❹ =

◆ = O.E. SWF

OE Flachwischer Verbindungssysteme

❺ = ❻ = ❼ = ❽ =

1

SWF	x1 x2	mm/ inches			For/Für main applications / Hauptfahrzeuganwendungen	
▶ SWF - VisioFlex® Flat Blade Original Equipment / Flachwischer Erstausrüstung (...)						
119383	x2	700 / 28 700 / 28	❶		FORD SEAT VOLKSWAGEN	**Galaxy 1** (06/01 > 04/06) **Alhambra 1** (06/01 > 08/10) **Golf Plus** (03/05 > 03/14) **Sharan 1** (06/01 > 08/10) **Touran 1** (05/03 > 08/10)
119384	x2	650 / 26 475 / 19	❶		FORD	**C-Max** (09/03 > 09/10)
119385 ◆	x2	650 / 26 400 / 16	❷		OPEL	**Corsa D** (09/06 >) **Corsa E** (01/15 >)
119387 ◆	x2	580 / 23 530 / 21	❷		SMART (MCC)	**Fortwo 2** (03/07 >) **Fortwo** (03/07 > 10/14)
119388 ◆	x2	650 / 26 600 / 24	❷		MERCEDES	**Vaneo** (04/04 >)
119389	x2	700 / 28 700 / 28	❶		MERCEDES PEUGEOT	**S-Class** (10/05 > 08/13) **407** (04/04 > 02/11)
119390	x2	650 / 26 500 / 20	❶		VOLVO	**S40** (02/04 > 02/06) **V50** (03/04 > 02/06)
119391 ◆	x2	700 / 28 600 / 24	❷		CITROËN	**C4** (11/04 > 09/10) 3
119392 ◆	x2	580 / 23 530 / 21	❸		MERCEDES RENAULT	**Citan** (10/12 >) **Kangoo 2** (01/08 >)
119393	x2	650 / 26 475 / 19	❶		CITROËN	**C5 1** (12/03 > 03/08) 5
119394	x2	650 / 26 425 / 17	❶		FORD PEUGEOT	**Focus 2** (10/04 > 08/05) 3 5 **207** (04/06 > 03/12) 3 5
119395 ◆	x2	650 / 26 580 / 23	❷		MERCEDES	**B-Class** (05/05 > 10/11) **A-Class** (09/04 > 08/12)
119396 ◆	x2	650 / 26 400 / 16	❸		CITROËN	**C3 2** (11/09 >) 5
119397 ◆	x2	700 / 28 530 / 21	❷		MERCEDES	**GL-Class** (09/06 > 11/12) **M-Class** (07/05 > 10/11) **R-Class** (10/05 >)
119398 ◆	x2	700 / 28 650 / 26	❷		MERCEDES	**Viano** (11/05 >) **Vito** (11/05 > 08/14)
119399 ◆	x2	700 / 28 550 / 22	❷		OPEL	**Zafira B** (07/05 >)
119401 ◆	x2	700 / 28 650 / 26	❷		PEUGEOT	**307** (10/04 > 09/07) 3 5
119402 ◆	x2	700 / 28 650 / 26	❶		RENAULT	**Modus** (09/04 > 05/05) **Modus / Grand Modus** (01/08 >)
119403 ◆	x2	650 / 26 550 / 22	❸		RENAULT	**Scénic 2** (01/05 > 05/09)
119404 ◆	x2	650 / 26 650 / 26	❷		SEAT	**Leon 2** (09/05 > 12/12)
119407 ◆	x2	650 / 26 600 / 24	❷		MERCEDES VOLKSWAGEN	**Sprinter** (06/06 >) **Crafter** (06/06 >)
119408 ◆	x2	650 / 26 450 / 18	❸		CITROËN FIAT PEUGEOT	**Némo** (02/08 >) **Fiorino** (02/08 >) **Bipper** (02/08 >)
119412 ◆	x2	650 / 26 380 / 15	❷		FIAT	**Grande Punto** (11/05 >) 3 5 **Linea** (07/07 >) **Punto 2** (11/05 >) 3 5 **Punto Evo** (10/09 >) 3 5
119413 ◆	x2	650 / 26 380 / 15	❷		FIAT	**Grande Punto 3** (11/05 >) **Linea** (07/07 > 10/15) **Punto Evo / Abarth** (10/09 >)

Flat Blade OE connections

❶ = ❷ = ❸ = ❹ = ❺ = ❻ = ❼ = ❽ =

◆ = O.E. SWF

OE Flachwischer Verbindungssysteme

SWF	x1 x2	mm/ inches			For/Für main applications / Hauptfahrzeuganwendungen	
▶ SWF - VisioFlex® Flat Blade Original Equipment / Flachwischer Erstausrüstung (...)						
119414 ◆	x2	650 / 26 500 / 20	❻		VOLVO	**S40 / V50** (03/06 > 08/12) **C30** (11/06 > 06/09) **S80** (06/06 >) **V70 / XC70** (10/07 >) **XC60** (01/11 >)
119415 ◆	x2	650 / 26 650 / 26	❶		CITROËN	**Xsara Picasso** (09/05 >)
119416 ◆	x2	650 / 26 550 / 22	❻		CITROËN FIAT PEUGEOT	**Jumper 2** (07/06 >) **Ducato** (07/06 >) **Boxer** (07/06 >)
119418 ◆	x2	650 / 26 475 / 19	❻		FORD VOLVO	**Mondeo 4** (06/07 >) 4 **C70** (03/06 > 12/13) **V40** (07/12 >) 5
119420 ◆	x2	650 / 26 400 / 16	❸		RENAULT	**Laguna 3** (10/07 >) 5
119422 ◆	x2	650 / 26 650 / 26	❷		AUDI	**Q7** (03/06 >)
119424 ◆	x2	580 / 23 580 / 23	❸		SAAB	**9.5** (09/07 > 12/09)
119426 ◆	x2	700 / 28 550 / 22	❷		CITROËN	**C5 2** (04/08 >) 4
119427 ◆	x2	630 / 25 400 / 16	❷		ALFA ROMEO	**MiTo** (09/08 >) 3
119428 ◆	x2	650 / 26 380 / 15	❻		FORD	**Fiesta 6** (10/08 > 08/10)
119429 ◆	x2	650 / 26 400 / 16	❻		CITROËN FORD PEUGEOT	**Berlingo 2** (05/08 >) **Fiesta 6** (09/10 >) **Partner 2** (05/08 >)
119430 ◆	x2	650 / 26 600 / 24	❶		MERCEDES	**E-Class** (03/09 >)
119431	x2	650 / 26 475 / 19	❻		BMW OPEL RENAULT	**2-Series Active Tourer** (10/14 >) **2-Series Gran Tourer** (06/15 >) **Vivaro** (07/14 >) **Trafic 3** (07/14 >)
119432 ◆	x2	640 / 25 520 / 20	❻		AUDI	**A6** (04/11 >) 4 **A7 / S7 Sportback** (11/10 >) 5
119435 ◆	x2	650 / 26 580 / 23	❻		MERCEDES	**M-Class** (11/11 >)
119436 NEW	x2	650 / 26 650 / 26	❶		PORSCHE VOLKSWAGEN	**Cayenne (955 series)** (03/03 > 10/07) **Touareg 1** (02/02 > 09/07)
119437	x2	680 / 27 520 / 20	❻		AUDI	**A8** (04/10 >)
119438	x2	650 / 26 650 / 26	❶		MERCEDES	**CL-Class (C215)** (10/00 >) **SL-Class** (10/01 > 03/12)
119439 ◆	x2	700 / 28 700 / 28	❷		FORD	**Kuga 2** (01/13 >)
119440 ◆ NEW	x2	650 / 26 650 / 26			SEAT	**Altea** (04/04 > 12/15) **Altea XL / Freetrack** (10/06 > 12/15) **Toledo 3** (10/04 > 12/09)
119441 ◆	x2	700 / 28 400 / 16	❻		SEAT VOLKSWAGEN	**Alhambra 2** (09/10 >) **Sharan 2** (09/10 >)
119442 ◆	x2	700 / 28 580 / 23	❻		OPEL	**Meriva B** (06/10 >)
119443 ◆	x2	750 / 30 700 / 28	❻		FORD	**Espace 5** (04/15 >) **Transit Custom / Kombi** (12/12 >)
119444 ◆	x2	730 / 29 630 / 25	❷		FORD	**C-Max 2** (10/10 >) **Grand C-Max** (10/10 >)
119445 ◆	x2	730 / 29 730 / 29	❻		FORD	**Focus 3** (03/11 >) 5

1

SWF	x1 x2	mm/ inches			For/Für main applications / Hauptfahrzeuganwendungen	
▶ SWF - VisioFlex® Flat Blade Original Equipment / Flachwischer Erstausrüstung (...)						
119446	x2	700 / 28 650 / 26	❻		OPEL	**Cascada** (05/13 >) **Astra J GTC** (11/11 >)
119447 ◆	x2	750 / 30 630 / 25	❻		CITROËN	**DS5** (11/11 >)
119448 ◆	x2	750 / 30 650 / 26	❷		FORD	**B-Max** (09/12 >)
119449	x1	750 / 30	❶		AUDI	**A2** (07/01 > 08/05) x1
119451 ◆	x2	800 / 31 750 / 30	❶		CITROËN	**C4 Picasso** (10/06 > 05/08)
119452 ◆	x2	750 / 30 650 / 26	❻		CITROËN FORD PEUGEOT	**C4** (10/10 >) 5 **DS4** (05/11 >) **Galaxy 2** (06/06 >) **S-Max** (05/06 >) **308** (09/07 > 08/13) 3 5
119454 ◆	x2	800 / 31 750 / 30	❸		CITROËN	**C4 Picasso** (06/08 > 05/13)
119455 ◆	x2	750 / 30 700 / 28	❶		RENAULT	**Espace 4** (10/02 >)
119456 ◆	x2	750 / 30 650 / 26	❸		RENAULT	**Scénic 3** (04/09 >)
119457 ◆	x2	800 / 31 700 / 28	❻		OPEL PEUGEOT	**Zafira C Tourer** (11/11 >) **3008** (04/09 >) **5008** (10/09 >)
119458	x2	800 / 31 750 / 30	❻		CITROËN	**C4 Picasso** (06/13 >) **Grand C4 Picasso** (10/13 >)
119459 ◆	x2	700 / 28 380 / 15	❷		FORD	**Tourneo Courier** (06/14 >) **Transit Courier** (06/14 >)
119460 ◆	x2	750 / 30 500 / 20	❻		FORD	**Transit Van 2T** (05/14 >)
119461	x2	600 / 24 520 / 20	❻		AUDI	**TT (FV3)** (10/14 >) **TT (FV9)** (03/15 >)
119462	x2	630 / 25 500 / 20	❻		PORSCHE VOLVO	**Panamera V6 / S / 4S / Turbo (970 series)** (10/13 > 10/16) **S90** (09/16 >) **V90** (09/16 >) **V90 Cross Country** (01/17 >) **XC90** (03/15 >)
119463	x2	680 / 27 500 / 20	❻		AUDI BENTLEY	**Q7 / SQ7 (4M)** (06/15 >) **Bentayga** (02/16 >)
119464 NEW	x2	700 / 28 600 / 24	❻		OPEL	**Astra K** (10/15 >) 5 **Astra K Sports Tourer** (04/16 >)
119465 NEW	x2	550 / 22 500 / 20	❻		MINI	**Mini Clubman** (10/15 >)
119466 ◆ NEW	x2	650 / 26 500 / 20	❸		CITROËN PEUGEOT TOYOTA	**Jumpy 3** (06/16 >) **SpaceTourer** (06/16 >) **Expert 3** (06/16 >) **Traveller** (06/16 >) **Proace / Proace Verso 2** (09/16 >)
119467 ◆ NEW	x2	550 / 22 400 / 16			FORD	**Ecosport** (04/14 >)
119468 NEW	x2	630 / 25 550 / 22	❻		VOLKSWAGEN	**Tiguan 2** (06/16 >)
119472 ◆ NEW	x2	550 / 22 550 / 22			MERCEDES	**C-Class (205)** (09/14 >) **C-Class (205)** (11/15 >) **C-Class (205)** (07/16 >) **GLC-Class (253)** (10/15 >) **GLC-Class (253)** (09/16 >)

Flat Blade OE connections

❶ = ❷ = ❸ = ❹ =

OE Flachwischer Verbindungssysteme

❺ = ❻ = ❼ = ❽ =

◆ = O.E. SWF

SWF	x1 x2	mm/ inches			For/Für main applications / Hauptfahrzeuganwendungen	
SWF - VisioFlex® Flat Blade Original Equipment / Flachwischer Erstausrüstung (...)						
119473 ◆ NEW	x2	600 / 24 475 / 19			MERCEDES	**A-Class (176)** (08/15 >) **CLA-Class (117)** (08/15 >) **CLA-Class (117) Shooting Brake** (08/15 >) **GLA-Class (156)** (09/15 >)
119474 ◆ NEW	x2	600 / 24 550 / 22			MERCEDES	**E-Class (213)** (03/16 >) **E-Class (213)** (10/16 >) **E-Class (213) All-Terrain** (12/16 >) **E-Class (238)** (04/17 >) **E-Class (238)** (09/17 >)
119475 ◆ NEW	x2	650 / 26 475 / 19			MERCEDES	**B-Class (246)** (09/15 >)
119476 ◆ NEW	x2	700 / 28 450 / 18			MERCEDES	**V-Class (447)** (06/14 >) **Vito** (06/14 >)
SWF - VisioFlex® rear blade program / Heckwischer-Programm						
119502 ◆	x1	405 / 16			SKODA VOLKSWAGEN	**Fabia 2 Combi / Scout** (01/08 >) **Octavia 2** (06/04 > 02/13) **Caddy 3 Caddy Life** (04/04 > 08/10) **Multivan / California T5** (06/03 >) **Touran 1** (03/06 > 11/06)
119503 ◆	x1	455 / 18			VOLKSWAGEN	**Multivan / California T5** (06/03 > 01/13) **Transporter T5** (11/03 >)
119504 ◆	x1	335 / 13			SEAT VOLKSWAGEN	**Exeo ST** (06/09 > 09/13) **Golf 5** (11/03 > 09/08) **Golf Plus** (03/05 > 03/09) **Polo 4 / 5** (10/02 > 08/09) **Tiguan** (11/07 >)
119507 ◆	x1	400 / 16			CITROËN OPEL VAUXHALL VOLVO	**C5 1** (09/04 > 03/08) **Vectra C** (10/05 > 12/08) **Vectra Mk.II** (10/05 > 12/08) **C30** (11/06 > 06/09)
119508 ◆	x1	425 / 17			MERCEDES	**Sprinter** (06/06 >)
119509 ◆	x1	475 / 19			FORD	**Mondeo 3** (06/07 >)
119511 ◆	x1	380 / 15			BMW VOLVO	**X5** (03/07 > 09/11) **XC60** (09/08 > 12/10) **XC90** (06/07 > 12/10)
119512 ◆	x1	500 / 20			OPEL VAUXHALL	**Insignia** (01/09 >) **Insignia** (01/09 >)
119513 ◆	x1	350 / 14			VOLVO	**XC70** (10/07 >) **V70** (10/07 >)
119514	x1	280 / 11			SKODA VOLKSWAGEN	**Yeti** (09/09 >) **Golf 6** (10/08 > 10/12) **Golf 7** (11/12 >) **Polo 6** (09/09 >)
119515	x1	280 / 11			SEAT VOLKSWAGEN	**Leon 2** (05/09 > 12/12) **Passat 6 Variant / SW** (09/05 > 10/10) **Passat 7** (11/10>) **Polo 5 TDI / GTI Limited Edition** (03/07 > 08/09)
119516 ◆	x1	250 / 10			SEAT SKODA VOLKSWAGEN	**Mii** (04/12 >) **Citigo** (05/12 >) **Scirocco** (09/08 >) **Up** (01/12 >)
119517 ◆	x1	320 / 13			AUDI	**A1 Sportback** (02/12 >) **Q5** (11/08 >)
119518	x1	335 / 13			SEAT VOLKSWAGEN	**Alhambra 2** (09/10 >) **Leon 3** (01/13 >) **Golf Plus** (04/09 > 03/14) **Touran 2** (09/10 >) **Passat 8 Variant / SW** (11/14 >)

Flat Blade OE connections

❶ = ❷ = ❸ = ❹ =

◆ = O.E. SWF

OE Flachwischer Verbindungssysteme

❺ = ❻ = ❼ = ❽ =

SWF	x1 x2	mm/ inches			For/Für main applications / Hauptfahrzeuganwendungen	
▶ SWF - VisioFlex® rear blade program / Heckwischer-Programm (...)						
119519 ◆	x1	400 / 16			AUDI	**A4 Avant** (05/08 >) **A6 Allroad Quattro** (04/12 >) **Q3** (10/11 >)
119520 ◆	x1	240 / 10			CITROËN RENAULT	**C5 2 Tourer** (05/08 >) **Clio 4** (10/12 >)
119521 ◆	x1	240 / 10			MERCEDES	**A-Class (176)** (09/12 >)
119522 ◆	x1	280 / 11			BMW MERCEDES MINI	**1-Series** (03/07 > 12/11) **1-Series** (09/04 > 08/11) **GLA-Class** (03/14 >) **Mini Clubman** (05/12 >) **Mini Clubvan** (09/12 >)
119523 ◆	x1	285 / 11			FORD MINI	**Kuga 2** (01/13 >) **Mondeo 4 SW** (12/14 >) **Mini Paceman** (01/13 >)
119524 ◆ NEW	x1	375 / 375			VOLKSWAGEN	**Tiguan 2** (06/16 >)
119525	x1	400 / 16			SEAT SKODA	**Toledo 4** (09/12 >) **Octavia 3** (03/13 >) **Rapid** (11/12 >) **Rapid Spaceback** (10/13 >) **Superb 2 Combi** (01/10 >)
119526 ◆ NEW	x1	340 / 13			BMW MERCEDES	**X1 (E84)** (10/09 > 09/15) **CLA-Class (117) Shooting Brake** (03/15 > 07/15) **CLS-Class (218) Shooting Brake** (10/12 > 04/14) **CLS-Class (218) Shooting Brake** (04/14 >)
119527 ◆ NEW	x1	340 / 13			AUDI BMW VOLKSWAGEN	**A3 (8V1)** (09/12 >) **A3 (8PA) Sportback** (09/04 > 01/13) **X1 (F48)** (10/15 >) **Touareg 2** (04/10 >)
119528 ◆ NEW	x1	380 / 15			AUDI	**A1 (8X1)** (09/10 >) **Q7 / SQ7 (4MB)** (06/15 >)
119530 ◆ NEW	x1	400 / 16			FIAT MERCEDES OPEL PORSCHE	**Doblo** (01/10 >) **Viano (639)** (03/11 > 06/14) **Combo** (11/11 >) **Macan (95b series)** (04/14 >) **Panamera V6 / S / 4S / Turbo (970 series)** (10/13 > 10/16)
▶ SWF - VisioFlex® Flat Blade to upgrade / Flachwischer Umrüstungssets x2						
119710	x2	475 / 19 475 / 19	❽	**U** (180808) **U** (180808)	FORD OPEL SUZUKI	**Fiesta 4** (10/95 > 04/02) **Vectra B** (09/95 > 03/02) **Grand Vitara 2** (09/05 >)
119711	x2	475 / 19 475 / 19	❽	**U** (180808) **U** (180808)	NISSAN VOLKSWAGEN	**Cube** (10/09 >) **Polo 3** (07/94 > 10/01)
119725	x2	530 / 21 450 / 18	❽	**U** (180808) **U** (180808)	FIAT RENAULT SEAT TOYOTA	**Punto 2** (10/99 > 10/09) **Clio 2 / Campus** (03/98 > 05/09) **Ibiza** (03/02 > 03/06) **Leon 1** (03/00 > 04/06) **Avensis** (01/98 > 03/03)
119726	x2	530 / 21 500 / 20	❽	**U** (180808) **U** (180808)	BMW FORD VOLVO	**3-Series** (04/91 > 04/98) **Mondeo 1 / 2** (01/93 > 12/00) **S40 / V40** (04/96 > 01/04)
119727	x2	530 / 21 530 / 21	❽	**U** (180808) **U** (180808)	SAAB	**900** (07/93 > 08/02)
119728	x2	530 / 21 475 / 19	❽	**U** (180808) **U** (180808)	VOLKSWAGEN	**Bora** (10/98 > 06/02) **Golf 4** (11/97 > 06/02)
119729	x2	530 / 21 450 / 18	❽	**U** (180808) **U** (180808)	AUDI VOLKSWAGEN	**A3** (05/02 > 05/03) **Golf 3** (11/91 > 12/95) **Vento** (11/91 > 09/98)
119739	x2	500 / 20 450 / 18	❽	**U** (180808) **U** (180808)	OPEL	**Astra G** (04/98 > 04/04) **Corsa C** (10/00 > 08/06) **Tigra Twintop** (09/04 >)

Flat Blade OE connections

❶ = ❷ = ❸ = ❹ =

◆ = O.E. SWF

OE Flachwischer Verbindungssysteme

❺ = ❻ = ❼ = ❽ =

SWF	x1 x2	mm/ inches			For/Für main applications / Hauptfahrzeuganwendungen	
SWF - VisioFlex® Flat Blade to upgrade / Flachwischer Umrüstungssets x2 (...)						
119740	x2	550 / 22 475 / 19	8	**U** (180808) **U** (180808)	FORD	**Focus 1** (10/98 > 09/04) 3 5
119741	x2	550 / 22 500 / 20	8	**U** (180808) **U** (180808)	ALFA ROMEO	**Alfa 156** (09/97 > 02/06)
119742	x2	550 / 22 500 / 20	8	**U** (180808) **U** (180808)	BMW CITROËN FORD PEUGEOT RENAULT	**X3** (01/04 > 10/10) **Xsara** (09/97 > 11/04) 5 **Mondeo 3** (01/01 > 05/07) 4 **306** (02/93 > 12/98) 3 5 **Mégane 1** (10/95 > 09/02) 5
119743	x2	550 / 22 530 / 21	8	**U** (180808) **U** (180808)	AUDI JAGUAR	**A6** (01/95 > 05/01) 4 **F-Type** (06/13 >) **F-Type** (01/14 >)
119744	x2	550 / 22 400 / 16	8	**U** (180808) **U** (180808)	CHEVROLET DACIA FORD	**Aveo** (05/08 > 01/12) 3 **Lodgy** (04/12 >) **Dokker** (10/12 >) **Fiesta 5** (05/02 > 10/08) **Fusion** (10/02 >)
119745	x2	580 / 23 500 / 20	8	**U** (180808) **U** (180808)	BMW	**3-Series** (05/98 > 02/05) 4
119746	x2	600 / 24 500 / 20	8	**U** (180808) **U** (180808)	BMW LAND ROVER	**X5** (11/13 >) **X6** (12/14 >) **Range Rover** (10/15 > 11/16) **Range Rover Sport 2** (09/13 > 09/15) **Range Rover Sport 2** (10/15 > 11/16)
119760	x2	600 / 24 400 / 16	8	**U** (180808) **U** (180808)	RENAULT	**Latitude** (01/11 >) **Scénic 1** (10/96 > 05/03)
119761	x2	600 / 24 450 / 18	8	**U** (180808) **U** (180808)	CITROËN PEUGEOT RENAULT	**C2** (09/03 >) **C3 / C3 Classic** (04/02 > 01/11) 5 **1007** (05/05 >) **Mégane 2** (09/02 > 12/05) 3 5
119762	x2	600 / 24 475 / 19	8	**U** (180808) **U** (180808)	FIAT OPEL	**Freemont** (06/11 >) **Signum** (05/03 > 11/08) **Vectra C** (04/02 > 12/08) 4
119763	x2	600 / 24 500 / 20	8	**U** (180808) **U** (180808)	RENAULT	**Laguna 2** (01/01 > 09/07) 5
119764	x2	600 / 24 530 / 21	8	**U** (180808) **U** (180808)	CITROËN PEUGEOT VOLVO	**C4 Aircross** (04/12 >) **4008** (05/12 >) **S60 / V70** (11/00 > 02/04) **S80** (10/98 > 05/03) **XC70** (09/00 > 02/04)
119780	x2	650 / 26 400 / 16	8	**U** (180808) **U** (180808)	HONDA PEUGEOT RENAULT TOYOTA	**CR-V** (01/07 > 09/12) **206** (09/98 > 03/09) 3 5 **Kadjar** (06/15 >) **Prius 3** (07/09 >) 5 **Verso** (06/09 >)
119781	x2	600 / 24 550 / 22	8	**U** (180808) **U** (180808)	OPEL	**Meriva A** (04/03 > 05/10) **Zafira A** (03/99 > 06/05)
119782	x2	650 / 26 550 / 22	8	**U** (180808) **U** (180808)	MERCEDES	**A-Class** (09/97 > 08/04) **Vaneo** (04/02 > 03/04)
119783	x1	650 / 26	8	**U** (180808)	RENAULT	**Twingo 1** (03/93 > 05/07) x1
119785	x2	700 / 28 650 / 26	8	**U** (180808) **U** (180808)	CHRYSLER PEUGEOT	**Voyager / Grand Voyager 3** (03/96 > 02/01) **307 / 307 SW** (05/01 > 09/04)
119786	x2	530 / 21 500 / 20	8	**U** (180808) **U** (180808)	AUDI SKODA VOLKSWAGEN	**A4** (06/94 > 01/01) 4 **Superb 1** (01/05 > 08/08) **Passat 5** (10/96 > 05/02) 4

Flat Blade OE connections

1 = 2 = 3 = 4 =

OE Flachwischer Verbindungssysteme

5 = 6 = 7 = 8 =

◆ = O.E. SWF

SWF	x1 x2	mm/ inches			For/Für main applications / Hauptfahrzeuganwendungen	
▶ SWF - VisioNext® Universal Flat Blade to upgrade / Universal Umrüstungsflachwischer x1						
119835	x1	350 / 14	❽	**U** (180808)	FIAT MAZDA NISSAN SUZUKI TOYOTA	**Idea** (01/06 > 03/08) **Mazda 2** (10/07 >) **Note** (10/05 > 09/13) **Celerio** (01/15 >) **Yaris 2** (01/06 > 08/11)
119838	x1	380 / 15	❽	**U** (180808)	FIAT HONDA HYUNDAI JEEP VOLKSWAGEN	**Idea** (01/04 > 12/05) **Accord 8** (01/03 > 02/06) **i 10** (04/08 > 11/13) **Wrangler Unlimited** (04/07 >) **Fox** (06/05 > 12/11)
119840	x1	400 / 16	❽	**U** (180808)	FORD RENAULT TOYOTA VOLKSWAGEN	**Fiesta 5** (05/02 > 10/08) **Scénic 1** (10/96 > 05/03) **Kadjar** (06/15 >) **Auris** (03/07 > 12/12) **Golf 2 C / CL / GL** (08/83 > 10/91)
119845	x1	450 / 18	❽	**U** (180808)	AUDI OPEL RENAULT SEAT VOLKSWAGEN	**A3** (10/96 > 05/03) **Astra G** (04/98 > 04/04) **Mégane 2** (09/02 > 12/05) **Ibiza** (03/93 > 03/06) **Golf 3** (11/91 > 12/95)
119848	x1	475 / 19	❽	**U** (180808)	FORD OPEL SKODA TOYOTA VOLKSWAGEN	**Focus 1** (10/98 > 02/05) **Vectra C** (04/02 > 12/08) **Fabia 1** (05/00 > 04/07) **Rav 4** (08/00 > 02/06) **Golf 4** (11/97 > 06/02)
119850	x1	500 / 20	❽	**U** (180808)	BMW OPEL RENAULT VOLKSWAGEN	**3-Series** (04/91 > 04/98) **Astra G** (04/98 > 08/04) **Clio 1** (03/94 > 02/98) **Mégane 1** (10/95 > 09/02) **Passat 5** (10/96 > 05/02)
119853	x1	530 / 21	❽	**U** (180808)	AUDI BMW SEAT SUZUKI VOLKSWAGEN	**A3** (10/96 > 05/03) **3-Series** (04/91 > 04/98) **Ibiza** (03/93 > 03/06) **Celerio** (01/15 >) **Golf 3 / 4** (11/91 > 06/02)
119855	x1	550 / 22	❽	**U** (180808)	BMW FORD OPEL RENAULT	**X3** (01/04 > 10/10) **Fiesta 5** (05/02 > 10/08) **Focus 1** (10/98 > 09/04) **Agila B** (03/08 >) **Mégane 1** (10/95 > 09/02)
119860	x1	600 / 24	❽	**U** (180808)	BMW OPEL RENAULT TOYOTA	**X5** (05/00 > 02/07) **Vectra C** (04/02 > 09/05) **Mégane 2** (09/02 > 12/05) **Scénic 1** (10/96 > 05/03) **Rav 4** (08/00 > 03/13)
119865	x1	650 / 26	❽	**U** (180808)	MERCEDES PEUGEOT RENAULT TOYOTA	**A-Class** (09/97 > 08/04) **307** (05/01 > 09/04) **Twingo 1** (03/93 > 05/07) x1 **Kadjar** (06/15 >) **Auris** (01/13 >)

1

Flat Blade OE connections

❶ = ❷ = ❸ = ❹ = ❺ = ❻ = ❼ = ❽ =

◆ = O.E. SWF

OE Flachwischer Verbindungssysteme

SWF	x1 x2	mm/ inches			For/Für main applications / Hauptfahrzeuganwendungen	
SWF Refill / Wischgummi						
115713	x1	330 / 13			FIAT	**Bravo** (09/95 > 10/01) **Punto 1** (03/93 > 09/99) 3 5 **Uno** (07/92 >) x1
115714	x1	402 / 16			FIAT LANCIA	**Marea Week-End** (09/96 >) **Dedra Station Wagon** (09/94 > 02/96)
115715	x1	402 / 16			ALFA ROMEO CITROËN FIAT PEUGEOT	**Alfa 147** (10/00 > 07/05) **Némo** (02/08 >) **Punto 2** (10/99 > 10/09) 3 5 **Stilo** (11/01 > 05/06) 3 5 **Bipper** (02/08 >)

1

Flat Blade OE connections

❶ = ❷ = ❸ = ❹ =

OE Flachwischer Verbindungssysteme

❺ = ❻ = ❼ = ❽ =

◆ = O.E. SWF

New p/n	Neue Art.-Nr.	Nouvelle référence	Nieuw p/n	Nuevas referencias	Novas referencias	Nuovi rifirimenti	Nowy produkt	Новый артикул	Yeni ürün numarası	Nyt varenr.

NEW SWF For/Für 2 3

▶ SWF - Das Original rear blade program / Heckwischer-Programm

116518 ◆	CITROËN	**Jumpy 2**	01/07 > 05/16
	FIAT	**Scudo 2**	01/07 > 06/16
	FORD	**Grand C-Max**	10/10 >
	PEUGEOT	**Expert 2**	01/07 > 05/16
	VOLVO	**C30**	07/09 > 12/13
116547 ◆	BMW	**5-Series (E61) Touring**	04/04 > 08/10
	FORD	**Focus 2**	10/04 > 08/05
	RENAULT	**Laguna 1 Nevada**	09/95 > 12/00
	VOLVO	**V50**	03/04 > 02/06
		V50	03/06 > 12/12
116548 ◆	FORD	**Fiesta 4**	10/95 > 04/02
	RENAULT	**Laguna 3**	10/07 > 10/15
		Mégane 1	10/95 > 09/02

▶ SWF - VisioFlex® Flat Blade Original Equipment / Flachwischer Erstausrüstung

119436	PORSCHE	**Cayenne (955 series)**	03/03 > 10/07
	VOLKSWAGEN	**Touareg 1**	02/02 > 09/07
119440 ◆	SEAT	**Altea**	04/04 > 12/15
		Altea XL / Freetrack	10/06 > 12/15
		Toledo 3	10/04 > 12/09
119464	OPEL	**Astra K**	10/15 >
		Astra K Sports Tourer	04/16 >
119465	MINI	**Mini Clubman**	10/15 >
119466 ◆	CITROËN	**Jumpy 3**	06/16 >
		SpaceTourer	06/16 >
	PEUGEOT	**Expert 3**	06/16 >
		Traveller	06/16 >
	TOYOTA	**Proace / Proace Verso 2**	09/16 >
119467 ◆	FORD	**Ecosport**	04/14 >
119468	VOLKSWAGEN	**Tiguan 2**	06/16 >
119472 ◆	MERCEDES	**C-Class (205)**	09/14 >
		C-Class (205)	11/15 >
		C-Class (205)	07/16 >
		GLC-Class (253)	10/15 >
		GLC-Class (253)	09/16 >
119473 ◆	MERCEDES	**A-Class (176)**	08/15 >
		CLA-Class (117)	08/15 >
		CLA-Class (117) Shooting Brake	08/15 >
		GLA-Class (156)	09/15 >
119474 ◆	MERCEDES	**E-Class (213)**	03/16 >
		E-Class (213)	10/16 >
		E-Class (213) All-Terrain	12/16 >
		E-Class (238)	04/17 >
		E-Class (238)	09/17 >
119475 ◆	MERCEDES	**B-Class (246)**	09/15 >
119476 ◆	MERCEDES	**V-Class (447)**	06/14 >
		Vito	06/14 >

NEW SWF For/Für 2 3

▶ SWF - VisioFlex® rear blade program / Heckwischer-Programm

119524 ◆	VOLKSWAGEN	**Tiguan 2**	06/16 >
119526 ◆	BMW	**X1 (E84)**	10/09 > 09/15
	MERCEDES	**CLA-Class (117) Shooting Brake**	03/15 > 07/15
		CLS-Class (218) Shooting Brake	10/12 > 04/14
		CLS-Class (218) Shooting Brake	04/14 >
119527 ◆	AUDI	**A3 (8V1)**	09/12 >
		A3 (8PA) Sportback	09/04 > 01/13
	BMW	**X1 (F48)**	10/15 >
	VOLKSWAGEN	**Touareg 2**	04/10 >
119528 ◆	AUDI	**A1 (8X1)**	09/10 >
		Q7 / SQ7 (4M)	06/15 >
119530 ◆	FIAT	**Doblo**	01/10 >
	MERCEDES	**Viano (639)**	03/11 > 06/14
	OPEL	**Combo**	11/11 >
	PORSCHE	**Macan (95b series)**	04/14 >
		Panamera V6 / S / 4S / Turbo (970 series)	10/13 > 10/16

◆ = O.E. SWF

D Heckwischblatt
GB Rear Blade
F Balais Arrière
NL Achter wisser
E Escobilla trasera
P Escova de tras
I Tergicristallo posteriore
PL Wycieraczka tylna
RU Задний стеклоочиститель
TU Arka cam silecegi
GR Πίσω υαλοκαθαριστήρας
S Bakruta
DK Achter wisser
FIN Takapyyhkijä

D Baujahr
GB Dates
F Date
NL Data
E Fecha
P Data
I Data
PL Data
RU Даты
TU Uygulama tarihi
GR Ημερομηνία κατασκευής
S Årsmodell
DK Årgang
FIN Päivämäärä

D Fahrerseite
GB Driver Side
F Conducteur
NL Bestuurder
E Lado conductor
P Lado condutor
I Lato guida
PL Strona kierowcy
RU Сторона водителя
TU Sürücü tarafı
GR Θέση οδηγού
S Förarsida
DK Førerside
FIN Kuskin puoli

D Beifahrerseite
GB Passenger Side
F Passager
NL Passagier
E Lado pasajero
P Lado passageiro
I Lato passeggero
PL Strona pasażera
RU Сторона пассажира
TU Yolcu tarafı
GR Θέση συνοδηγού
S Passagerarsida
DK Passagerside
FIN Matkustajan puoli

D Nur für Rechtslenker
GB for Right Hand Drive only
F Conduite à droite
NL Rechtsgestuurd voertuig
E Únicamente para conducción a derechas
P Para conduzir a direita unicamente
I Guida a destra
PL Tylko ruch prawostronny
RU Только для авто с правым расположением руля
TU Yalnızca sagdan direksiyonlu araçlar için
GR Δεξιοτίμονο μόνο
S Endast för högerstyrd
DK Kun Højrestyrede
FIN Vain oikean puoleiselle liikenteelle

D Adapter
GB Adaptor
F adaptateur
NL Adapter
E Adaptador
P Adaptador
I Adattatore
PL Adaptor
RU Адаптер
TU Adaptör
GR Αντάπτορας
S Adapter
DK Adaptor
FIN Adapteri

D Einarmwischer
GB Monoblade
F monobalai
NL Enkele wisser
E Mono escobilla
P Mono-escova
I Mono spazzola
PL Wycieraczka pojedyncza
RU Один стеклоочиститель
TU Tek silecek
GR Με 1 υαλοκαθαριστήρα
S Singel torkare
DK Enkelt viskerblad
FIN Monoblade

D Mit 2 Hecktüren
GB 2 rear doors
F 2 portes arrières
NL 2 deuren achter
E 2 puertas traseras
P 2 portas atrás
I 2 porte posteriori
PL Dwoje tylnych drzwi
RU Две задние двери
TU Çift bagaj kapısı
GR 2 πίσω πόρτες
S Med dubbla bakdörrar
DK 2 bagdøre
FIN 2 takaovea

D Heckklappe
GB Tailgate
F Hayon arrière
NL Achter klep
E Porton trasero
P Portas detrás
I Sportello
PL Tylna klapa
RU Крышка багажника
TU Tek bagaj kapısı
GR Πίσω πόρτα
S Bakdörr
DK Bagklap
FIN Takaovi

D Coupe
GB Coupe
F Coupé
NL Coupe
E Coupé
P Coupe
I Coupé
PL Coupe
RU Купе
TU Coupe
GR Coupé
S Coupé
DK Coupé
FIN Coupe

D Cabrio
GB Cabriolet
F Cabriolet
NL Cabriolet
E Cabriolet
P Descapotavel
I Cabriolet
PL Kabriolet
RU Кабриолет
TU Üstü açık
GR Cabrio
S Cabriolet
DK Cabriolet
FIN Cabriolet

D Kombi
GB Estate
F Break
NL Stationwagon
E Break
P Carrinha
I Station Wagon
PL Kombi
RU Универсал
TU Station Wagon
GR Station wagon
S Kombi
DK Stationcar
FIN Farmari

D Limousine
GB Saloon
F Berline
NL Sedan
E Berlina
P 4 portas
I Berlina
PL Sedan
RU Седан
TU Sedan
GR Τετράθυρο
S Sedan
DK Sedan
FIN Sedan

D Anzahl der Türen
GB Number of doors
F nombre de portes
NL Aantal deuren
E Numero de puertas
P Numero de portas
I Numero di porte
PL Ilość drzwi
RU Количество дверей
TU Kapı sayısı
GR Αριθμός θυρών
S Antal dörrar
DK Antal døre
FIN Ovien lukumäärä

D Haken
GB Hook
F Accrochage Crochet
NL Haakje
E Fijacion por gancho
P Fixaçao por gancho
I Adattatore
PL Hak
RU Поводок с крючком
TU Kancalı silecek kolu
GR Γάντζος
S Krok
DK Krog
FIN Koukku

D Baionnetteverschluß
GB Bayonet
F Baionnette
NL Bajonet
E Fijacion tipo bayoneta
P fixaçao tipo "baionette"
I Baionetta
PL Bagnet
RU Прямой поводок
TU Düz silecek kolu
GR Με κούμπωμα
S Bajonettfäste
DK Bajonet
FIN Tappikiinnitys

D Seitliche Befestigung
GB Side Fixing
F Accrochage latéral
NL Zij-bevestiging
E Fijacion lateral
P Fixaçao lateral
I Fissagio laterale
PL Boczne mocowanie
RU Боковое крепление
TU Yan baglantı
GR Με πλάγια στήριξη
S Sido fäste
DK Sidemonteret
FIN Sivu kiinnitys

D Gegenlaufsystem
GB Butterfly Wiping
F Essuyage Papillon
NL Butterfly technologie
E Barrido cruzado (estilo mariposa)
P Limpeza cruzada
I Tergitura a farfalla
PL Wycieraczki przeciwbieżne
RU Распашная очистка
TU Kelebek silme
GR Διασταυρούμενος καθαρισμός
S Motgående
DK Butterfly visker
FIN Perhos pyyhintä

D Gleichlaufsystem
GB Parrallel Wiping
F Essuyage Parrallele
NL Conventionele technologie
E Barrido paralelo
P Limpeza paralelo
I Tergitura parallela
PL Wycieraczki równobieżne
RU Синхронизированная очистка
TU Paralel silme
GR Παράλληλος καθαρισμός
S Parallell
DK Parallel visker
FIN Tavallinen pyyhintä

D Standardwischer
GB Conventional Wiper Blade
F Essuie-Glace conventionnel
NL Conventioneel ruitenwisserblad
E Escobilla limpiaparabrisas convencional
P Escova Limpa-vidros Convencional
I Spazzola standard
PL Wycieraczka standardowa
RU Каркасная щетка
TU Klasik silecek
GR Συμβατικός υαλοκαθαριστήρας
S Standardblad
DK Standardblad
FIN Tavallinen pyyhkijän sulka

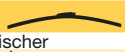

D Flachwischer
GB Flat Blade
F Essuie-Glace plat
NL Flat Blade
E Escobilla limpiaparabrisas plana
P Escova Plana
I Flatblade
PL Wycieraczka płaska
RU Бескаркасная щетка
TU Flatblade
GR Υαλοκαθαριστήρας Επίπεδης Λεπίδας
DK Flatblade
S Flatblade
FIN Rungoton pyyhkijän sulka

D Wischgummis
GB Refill
F Lame de rechange
NL Ruitenwisserrubber
E Lámina
I Gomma
PL Pióra wycieraczek
RU Резиновый элемент стеклоочистителя

D Für Fahrzeuge mit aufklappbarer Heckscheibe
GB For vehicle with opening rear window
F Pour véhicule avec lunette arrière ouvrante
NL Voor voertuigen met te openen achterruit
E Para vehículos con luneta trasera practicable
P Para veículo com janela traseira com abertura
I Per veicoli con lunotto posteriore apribile
PL Do samochodów z otwieraną tylną szybą
RU Для автомобилей с открывающимся задним стеклом
TU Arka camı açılan araçlar için
GR Για όχημα στο οποίο ανοίγει ξεχωριστά το τζάμι της πίσω πόρτας
S För fordon med öppnigsbar bakruta
DK For køretøjer med oplukkelig bagrude
FIN Avattava takalasi

D Für Fahrzeuge mit fester Heckscheibe
GB For vehicle with fixed rear window
F Pour véhicule avec lunette arrière fixe
NL Voor voertuigen met vaste achterruit
E Para vehículos con luneta trasera fija
P Para veículo com janela traseira fixa
I Per veicoli con lunotto posteriore fisso
PL Do samochodów z zamontowaną tylną szybą
RU Для автомобилей с фиксированным задним стеклом
TU Arka camı sabit araçlar için
GR Για όχημα με σταθερό τζάμι στην πίσω πόρτα
DK For køretøjer med fast bagrude
S För fordon med fast bakruta
FIN Kiinteä takalasi

D Kurzhakenbefestigung
GB Special Hook fastening
F Fixation par crochet spécial
NL Kortehaakbevestiging
E Fijacion por gancho especial
P Fijaçao especial de gancho
I Connessione a gancio speciale
PL Specjalne mocowanie haczykowe
TU Özel kancali silecek kolu
GR Ειδική σύνδεση με γάντζο
S Special Krokfäste
FIN Koukkukiinnitys

D Steck-schraub-befestigung
GB Snap-screw
F Fixation par vis-baïonette
NL Schroefbevestiging
E Fijacion por enchufe-tornillo
P Fijaçao por encaixe
I Baionetta
PL Uchwyt na zatrzask i śruby
GR Βιδωτό
S Rak arm med skruvfäste
FIN Tappikiinnitys ruuvilla

D Gebogenes wischblatt
GB Curved blade
F Essuie-glace courbe
NL Gebogen wisserblad
E Escobilla curva
P Escova curva
I Spazzola curva
PL Wycieraczka zakrzywiona
GR Καμπυλωτός υαλοκαθαριστήρας
S Svängt blad
DK Buede viskerblade

D Aufgesetzte sheibenwaschdüsen
GB Washer ramp mounted on blade
F Rampe d'arrosage montée
NL Sproeigallerij gemonteerd op wisserblad
E Rampa surtidora incorporada
P Sistema de rega montado
I Distributore per lavavetro incorporato
PL Z zamontowanym spryskiwaczem
TU Su püskürtücüleri kol üzerinde
GR Σύστημα πλύσης ενσωματωμένο στον υαλοκαθαριστήρα
S Spolarmunsticke
FIN Tuulilasin pesuneste
DK Sprinklerdyse, -bro monteret

3

For/Für			2 in 3	– SPOILER – – HBLADE –				
ABARTH								
124	Spider		06/16 →			116 **109**	116 **126**	
			06/16 →	– HBLADE – 8		116 **176**	116 **177**	
			06/16 →	8		119 **845**	119 **848**	
			06/16 →			116 **109**	116 **126**	
			06/16 →	8		119 **845**	119 **848**	
500	Abarth 595		03/12 →	6	119 **290**			116 **530**
	Abarth 595 Turismo / Competizione		03/12 →	6	119 **290**			116 **530**
	Abarth 595C		03/12 →	6	119 **290**			
	Abarth 595C Turismo / Competizione		03/12 →	6	119 **290**			
	Abarth 695 Biposto		03/12 →	6	119 **290**			116 **530**
	Abarth 695 Edizione Maserati		03/12 →	6	119 **290**			116 **530**
	Abarth 695C Tributo Maserati		03/12 →	6	119 **290**			
AIXAM								
A.721 / A.741 / A.751		x1	09/04 →	8		119 **855**		
Scouty R / Crossline		x1	09/04 → 05/08	8		119 **855**		
Scouty R		x1	06/08 →			116 **166**		
City / Roadline / Crossline		x1	02/08 → 09/10			116 **166**		115 **715**
City / City S / GTO		x1	10/10 →			116 **166**		
			10/10 →	8		119 **855**		
Crossline		x1	10/10 → 2013			116 **166**		116 **520**
			10/10 → 2013	8		119 **855**		
Crossline / Crossover / Coupé		x1	01/14 →			116 **166**		116 **530**
			01/14 →	8		119 **855**		
ALFA ROMEO								
Alfa 6			04/79 → 02/87	8		119 **845**	119 **845**	
Alfa 33		~~Q4~~	07/83 → 12/92		116 **226**	116 **109**	116 **109**	
			07/83 → 12/92	– SPOILER –		116 **602**		
			07/83 → 12/92	8		119 **845**	119 **845**	
		Q4	07/83 → 12/92			116 **121**	116 **121**	
			07/83 → 12/92	8		119 **840**	119 **840**	
			01/93 → 1995		116 **218**	116 **126**	116 **126**	
			01/93 → 1995	8		119 **848**	119 **848**	
			07/83 → 12/92		116 **226**	116 **109**	116 **109**	116 **120**
			07/83 → 12/92	– SPOILER –		116 **602**		
			07/83 → 12/92	8		119 **845**	119 **845**	116 **120**
			01/93 →		116 **218**	116 **126**	116 **126**	
			01/93 →	8		119 **848**	119 **848**	
Alfa 75			07/83 → 09/86			116 **121**	116 **121**	116 **122**
			07/83 → 09/86	8		119 **840**	119 **840**	116 **122**
			10/86 → 1993		116 **226**	116 **109**	116 **109**	
			10/86 → 1993	– SPOILER –		116 **602**		
			10/86 → 1993	8		119 **845**	119 **845**	
Alfa 90			10/84 →		116 **226**	116 **109**	116 **109**	
			10/84 →	– SPOILER –		116 **602**		
			10/84 →	8		119 **845**	119 **845**	
Alfa 145			06/96 → 10/00			116 **141**	116 **126**	115 **713**
			06/96 → 10/00	8		119 **855**	119 **845**	115 **713**
Alfa 146			06/96 → 10/00			116 **141**	116 **126**	
			06/96 → 10/00	8		119 **855**	119 **845**	
Alfa 147			10/00 → 07/05			116 **166**	116 **121**	115 **715**
			10/00 → 07/05	– SPOILER –		116 **606**		
			10/00 → 07/05	8		119 **855**	119 **840**	115 **715**
			08/05 → 2011	1	119 **362**			115 **715**
Alfa 155		Q4	11/91 → 1997		116 **310**	116 **134**	116 **126**	
			11/91 → 1997	– SPOILER –	116 **311**	116 **607**		
			11/91 → 1997	8		119 **853**	119 **848**	
Alfa 156			09/97 → 02/06	– SPOILER –		116 **606**	116 **112**	
			09/97 → 02/06	8	119 **741**	119 **855**	119 **850**	
		Sport Wagon / Q4	06/00 → 02/06	– SPOILER –		116 **606**	116 **112**	115 **715**
			06/00 → 02/06	8	119 **741**	119 **855**	119 **850**	115 **715**
Alfa 159			09/05 → 12/13	1	119 **369**			
		Sportwagon / Q4	03/06 → 12/13	1	119 **369**			115 **715**
Alfa 164			07/87 → 11/92		116 **220**	116 **134**	116 **112**	
			07/87 → 11/92	– SPOILER –	116 **313**	116 **607**		
			07/87 → 11/92	8		119 **853**	119 **853**	
Alfa 166			10/98 →		116 **310**			

Flat Blade OE connections

❶ = ❷ = ❸ = ❹ =

OE Flachwischer Verbindungssysteme

❺ = ❻ = ❼ = ❽ =

For/Für				– SPOILER – – HBLADE –				
ALFA ROMEO (...)								
Alfa 2000						116 **119**	116 **119**	
Alfa GTV			1982 → 1987		116 **226**	116 **109**	116 **109**	
			1982 → 1987	❽		119 **845**	119 **845**	
Alfasud			→ 1983			116 **120**	116 **120**	
	Sprint		01/83 → 1985		116 **226**	116 **109**	116 **109**	116 **112**
Alfetta			05/72 → 08/81			116 **122**	116 **122**	
			09/81 → 12/84		116 **226**	116 **109**	116 **109**	
Arna			1983 →		116 **220**	116 **112**	116 **112**	
			1983 →	– SPOILER –		116 **604**		
			1983 →	❽		119 **850**	119 **850**	
Berlina 2000						116 **119**	116 **119**	
Brera			10/05 → 12/11	❶	119 **369**			115 **715**
Coupe	GT		→ 1976			116 **119**	116 **119**	
			01/04 → 07/05	❽		119 **855**	119 **840**	
			07/05 → 02/10	❶	119 **362**			
Giulia			06/16 →	❻	119 **270**			
Giulietta			→ 04/81			116 **122**	116 **122**	
			05/81 → 04/85		116 **226**	116 **109**	116 **109**	
			05/10 →	❻	119 **298**			116 **540**
MiTo			09/08 →	❷	119 **427**			116 **520**
Montreal						116 **122**	116 **122**	
Nuova Giulia			→ 1976			116 **119**	116 **119**	
R.Z.			1993 → 1995		116 **226**	116 **109**	116 **109**	
			1993 → 1995	❽		119 **845**	119 **845**	
Spider			09/85 → 03/95			116 **121**	116 **121**	
			04/06 → 12/11	❶	119 **369**			
ASTON MARTIN								
DB7			1993 →		116 **220**	116 **112**	116 **112**	
Vantage		x1	1993 →			116 **166**		
Virage			1990 →		116 **220**	116 **112**	116 **112**	
Volante			1991 →		116 **222**	116 **166**	116 **166**	
			1991 →	– SPOILER –		116 **607**		
AUDI								
50	(86)		08/74 → 07/78			116 **121**	116 **121**	116 **121**
			08/74 → 07/78	– SPOILER –		116 **601**		
60			08/67 → 07/72			116 **121**	116 **121**	116 **121**
75			08/64 → 09/72			116 **121**	116 **121**	116 **121**
80	(81,85,B2)		08/78 → 07/83		116 **226**	116 **109**	116 **109**	
			08/78 → 07/83	– SPOILER –		116 **602**		
			08/78 → 07/83	❽		119 **845**	119 **845**	
	(81,85,B2,89-89Q,8A,B3)		08/83 →		116 **220**	116 **134**	116 **112**	
			08/83 →	– SPOILER –	116 **313**	116 **607**		
			08/83 →	❽		119 **853**	119 **853**	
	(81,85,B2)		08/83 → 08/86		116 **226**	116 **109**	116 **109**	
			08/83 → 08/86	– SPOILER –		116 **602**		
	(89-89Q,8A,B3)	S2	08/83 → 1991		116 **220**	116 **134**	116 **112**	
			08/83 → 1991	– SPOILER –	116 **313**	116 **607**		
			08/83 → 1991	❽		119 **853**	119 **850**	
			09/86 →		116 **222**	116 **134**	116 **134**	
			09/86 →	– SPOILER –	116 **314**	116 **607**		
	(8C,B4)	Avant	09/91 → 1996		116 **220**	116 **134**	116 **112**	116 **121**
			09/91 → 1996	– SPOILER –	116 **313**	116 **607**		
			09/91 → 1996	❽		119 **853**	119 **853**	116 **121**
		Avant RS2	09/91 → 1996		116 **222**	116 **134**	116 **134**	116 **121**
			09/91 → 1996	– SPOILER –	116 **314**	116 **607**		
			09/91 → 1996	❽		119 **853**	119 **850**	116 **121**
90			10/84 → 05/94		116 **220**		116 **112**	
			10/84 → 05/94	– SPOILER –	116 **313**	116 **607**		
			10/84 → 05/94	❽		119 **853**	119 **853**	
			10/84 → 03/87		116 **226**	116 **109**	116 **109**	
			04/87 → 05/94		116 **222**	116 **134**	116 **134**	
			04/87 → 05/94	– SPOILER –	116 **314**	116 **607**		
100	(44,44Q,C3)		08/82 → 11/90		116 **222**	116 **134**	116 **134**	
			08/82 → 11/90	– SPOILER –	116 **314**	116 **607**		
			08/82 → 11/90	❽		119 **853**	119 **853**	
	(4A,C4)		12/90 → 07/94		116 **222**	116 **166**	116 **166**	

4

Flat Blade OE connections

❶ = ❷ = ❸ = ❹ =

OE Flachwischer Verbindungssysteme

❺ = ❻ = ❼ = ❽ =

For/Für			2+3	– SPOILER – HBLADE				
▶ AUDI (...)								
100	(4A,C4)		12/90 → 07/94	– SPOILER –		116 **606**	116 **166**	
			12/90 → 07/94	8		119 **855**	119 **855**	
	(43,C2)	Avant	07/76 → 07/82		116 **226**	116 **109**	116 **109**	116 **109**
			07/76 → 07/82	– SPOILER –		116 **602**		
	(44,44Q,C3)	Avant	08/82 → 11/90		116 **222**	116 **134**	116 **134**	116 **134**
			08/82 → 11/90	– SPOILER –	116 **314**	116 **607**		
			08/82 → 11/90	8		119 **853**	119 **853**	116 **134**
	(4A,C4)	Avant	12/90 → 07/94		116 **222**	116 **166**	116 **166**	116 **109**
			12/90 → 07/94	– SPOILER –		116 **606**		
			12/90 → 07/94	8		119 **855**	119 **855**	116 **109**
200	(43)		08/79 → 07/83		116 **226**	116 **109**	116 **109**	
			08/79 → 07/83	– SPOILER –		116 **602**		
			08/79 → 07/83	8		119 **845**	119 **845**	
	(44)		08/83 → 12/91		116 **220**	116 **134**	116 **112**	
			08/83 → 12/91	– SPOILER –	116 **313**	116 **607**		
			08/83 → 12/91	8		119 **853**	119 **853**	
		Avant	08/84 → 12/91		116 **222**	116 **134**	116 **134**	116 **134**
			08/84 → 12/91	– SPOILER –	116 **314**	116 **607**		
			08/84 → 12/91	8		119 **853**	119 **853**	116 **134**
A1	(8X1)	3	09/10 →	6	119 **260**			119 **528**
	(8XA)	Sportback 5	02/12 →	6	119 **260**			119 **517**
A2	(8Z0)	x1	07/01 → 08/05	1		119 **449**		
A3	(8L1)		10/96 → 05/02	– SPOILER –	116 **351**	116 **607**	116 **192**	116 **120**
			10/96 → 05/02	2	119 **725**	119 **334**		
			05/02 → 05/03	– SPOILER –	116 **311**	116 **607**	116 **126**	116 **120**
			05/02 → 05/03	2	119 **729**	119 **334**		
	(8P1)	3	06/03 → 08/04	2	119 **355**	119 **334**		116 **119**
			09/04 → 08/12	2	119 **363**			116 **119**
			09/04 → 08/12	2	119 **364**			116 **119**
	(8V1)	3	09/12 →	6	119 **272**			119 **527**
	(8VS)	4	09/13 →	6	119 **272**			
	(8PA)	Sportback 5	09/04 → 01/13	2	119 **363**			119 **527**
			09/04 → 01/13	2	119 **364**			119 **527**
	(8VA)	Sportback 5	02/13 →	6	119 **272**			119 **527**
	(8P7)		04/08 → 01/14	2	119 **276**			
	(8V7)		02/14 →	6	119 **272**			
A4	(8D2,B5)	4	06/94 → 01/95	– SPOILER –	116 **313**	116 **607**	116 **112**	
			06/94 → 01/95	8	119 **786**	119 **853**	119 **850**	
			02/95 → 01/99	– SPOILER –		116 **607**	116 **136**	
			02/95 → 01/99	8	119 **786**	119 **853**	119 **850**	
			02/99 → 01/01	– SPOILER –		116 **606**	116 **136**	
			02/99 → 01/01	8	119 **786**	119 **853**	119 **850**	
	(8E2,B6)	4	02/01 → 10/03		116 **342**			
			02/01 → 10/03		116 **343**			
	(8EC)	4	11/03 → 12/07	4	119 **323**			
			11/03 → 12/07	4	119 **370**			
	(8K2)	4	01/08 → 10/15	6	119 **297**			
	(8W2)	4	11/15 →	6	119 **297**			
	(8H7)		04/02 → 05/09	4	119 **350**			
			04/02 → 05/09	4	119 **327**			
	(8D5,B5)	Avant	06/94 → 01/95	– SPOILER –	116 **313**	116 **607**	116 **112**	116 **120**
			06/94 → 01/95	8	119 **786**	119 **853**	119 **850**	116 **120**
			02/95 → 01/99	– SPOILER –		116 **607**	116 **136**	116 **120**
			02/95 → 01/99	8	119 **786**	119 **853**	119 **850**	116 **120**
			02/99 → 09/01	– SPOILER –		116 **606**	116 **136**	116 **120**
			02/99 → 09/01	8	119 **786**	119 **853**	119 **850**	116 **120**
	(8E5,B6)	Avant	10/01 → 10/03		116 **342**			116 **119**
			10/01 → 10/03		116 **343**			116 **119**
	(8ED)	Avant	10/03 → 04/08	4	119 **323**			116 **119**
			10/03 → 04/08	4	119 **370**			116 **119**
	(8K5)	Avant	05/08 → 10/15	6	119 **297**			119 **519**
	(8W5)	Avant	11/15 →	6	119 **297**			
	(8KH,B8)	Allroad	05/09 → 06/16	6	119 **297**			119 **519**
	(8WH)	Allroad Quattro	07/16 →	6	119 **297**			
A5	(8TA)	Sportback 5	10/09 → 12/16	6	119 **297**			
	(F5A)	Sportback 5	01/17 →	6	119 **297**			
	(8T3)		06/07 → 12/07	6	119 **296**			

Flat Blade OE connections

❶ = ❷ = ❸ = ❹ =

❺ = ❻ = ❼ = ❽ =

OE Flachwischer Verbindungssysteme

For/Für			2 3	– SPOILER – HBLADE	1+2	1	2	
AUDI (...)								
A5	(8T3)		01/08 → 10/16	6	119 **297**			
A5 / S5	(F53)		11/16 →	6	119 **297**			
A5	(8F7)		05/09 → 02/17	6	119 **297**			
A6	(4A,C4)		06/94 → 10/94	– SPOILER –	116 **348**	116 **606**	116 **191**	
	(4A,4B,C4,C5)		01/95 → 05/01	– SPOILER –	116 **348**	116 **606**	116 **191**	
			01/95 → 05/01	8	119 **743**	119 **855**	119 **853**	
			06/01 → 04/04	4	119 **323**			
			06/01 → 04/04	4	119 **370**			
	(4F2,C6)		05/04 → 03/11	6	119 **259**			
	(4G2,C7)		04/11 →	6	119 **432**			
	(4A,CA)	Avant	01/95 → 03/97	– SPOILER –	116 **348**	116 **606**	116 **191**	116 **109**
			01/95 → 03/97	8	119 **743**	119 **855**	119 **853**	116 **109**
	(4B,C5)	Avant	04/97 → 09/01	– SPOILER –	116 **348**	116 **606**	116 **191**	116 **120**
			04/97 → 09/01	8	119 **743**	119 **855**	119 **853**	116 **120**
			10/01 → 03/05	4	119 **323**			
			10/01 → 03/05	4	119 **370**			
	(4F5,C6)	Avant	04/05 → 08/11	6	119 **259**			
	(4G5,C7)	Avant	09/11 →	6	119 **432**			119 **519**
	(4GH,C5)	Allroad	06/00 → 09/01	– SPOILER –	116 **348**	116 **606**	116 **191**	116 **120**
			06/00 → 09/01	8	119 **743**	119 **855**	119 **853**	116 **120**
	(4BH,C5)	Allroad	10/01 → 07/05	4	119 **323**			
			10/01 → 07/05	4	119 **370**			
	(4FH,C6)	Allroad Quattro	06/06 → 02/12	6	119 **259**			
	(4GH)	Allroad Quattro	04/12 →	6	119 **432**			119 **519**
S6	(4A2,4A5)		06/96 → 12/99	– SPOILER –	116 **348**	116 **606**	116 **191**	
			06/96 → 12/99	8	119 **743**	119 **855**	119 **853**	
S6 / S6	(4F5)	Avant	05/06 → 03/11	6	119 **259**			
A7 / S7	(4GA,4GF)	Sportback 5	11/10 →	6	119 **432**			
A8	(4D2,4D8)		06/94 → 10/98	– SPOILER –	116 **348**	116 **606**	116 **191**	
	(4E)		12/02 → 03/10	4	119 **358**			
	(4H)		04/10 →	6	119 **437**			
Cabriolet	(8G7,B4)		06/91 → 03/98		116 **222**	116 **166**	116 **166**	
			06/91 → 03/98	8		119 **855**	119 **855**	
Coupe	(81,85)	GT	09/80 → 07/83		116 **226**	116 **109**	116 **109**	116 **109**
			09/80 → 07/83	– SPOILER –		116 **602**		
			09/80 → 07/83	8		119 **845**	119 **845**	116 **109**
			08/83 → 10/88		116 **220**	116 **112**	116 **134**	116 **109**
			08/83 → 10/88	– SPOILER –	116 **314**	116 **607**		
			08/83 → 10/88	8		119 **853**	119 **853**	116 **109**
	(89,8B)		11/88 →		116 **222**	116 **166**	116 **166**	116 **112**
Quattro	(85)		10/80 → 07/83		116 **226**	116 **109**	116 **109**	
			10/80 → 07/83	– SPOILER –		116 **602**		
			10/80 → 07/83	8		119 **845**	119 **845**	
			08/83 → 07/91		116 **220**		116 **112**	
			08/83 → 07/91	– SPOILER –	116 **313**	116 **607**		
			08/83 → 07/91	8		119 **853**	119 **853**	
Q3	(8U)		10/11 →	6	119 **297**			119 **519**
Q5	(8R)		11/08 → 12/16	6	119 **297**			119 **517**
Q7	(4L)		03/06 → 05/15	2	119 **422**			
Q7 / SQ7	(4M)		06/15 →	6	119 **463**			119 **528**
TT	(8N3,8N9)		10/98 → 02/03	– SPOILER –	116 **366**	116 **607**	116 **136**	
	(8N3)		03/03 → 08/06	1	119 **322**			
			03/03 → 08/06	1	119 **315**			
	(8N9)		03/03 → 10/06	1	119 **322**			
			03/03 → 10/06	1	119 **315**			
	(8J3,8J9)		09/06 → 09/14	2	119 **292**			
	(FV3)		10/14 →	6	119 **461**			
	(FV9)		03/15 →	6	119 **461**			
V8	(44,4C)		08/87 → 07/91		116 **222**	116 **134**	116 **134**	
			08/87 → 07/91	– SPOILER –	116 **314**	116 **607**		
			08/87 → 07/91	8		119 **853**	119 **853**	
			08/91 →		116 **222**	116 **166**	116 **166**	
			08/91 →	– SPOILER –		116 **606**		
			08/91 → 11/93	8		119 **855**	119 **855**	
AUSTIN ROVER								

Flat Blade OE connections

❶ = ❷ = ❸ = ❹ =

❺ = ❻ = ❼ = ❽ =

OE Flachwischer Verbindungssysteme

For/Für				– SPOILER – – HBLADE –				
AUSTIN ROVER (...)								
1.8S / 2.2 / 3.0			→ 10/75			116 **119**	116 **119**	
1100 / 1300			1968 → 02/74			116 **116**	116 **116**	
Allegro			05/73 → 10/83			116 **119**	116 **119**	116 **116**
Ital			1980 → 02/84			116 **122**	116 **122**	
Maestro			01/85 →		116 **220**	116 **112**	116 **112**	116 **112**
			01/85 →	– SPOILER –		116 **604**		
			01/85 →	8		119 **850**	119 **850**	116 **112**
Marina			1971 → 10/80			116 **121**	116 **121**	
Maxi			04/69 → 02/81			116 **120**	116 **120**	
Metro			01/80 →			116 **122**	116 **122**	116 **122**
			01/84 →			116 **121**	116 **121**	116 **121**
			01/84 →	8		119 **840**	119 **840**	116 **121**
Mini			1959 → 10/89			116 **116**	116 **116**	
Montego			05/84 → 02/89		116 **220**	116 **112**	116 **112**	
			05/84 → 02/89	– SPOILER –		116 **604**		
			05/84 → 02/89	8		119 **850**	119 **850**	
			05/84 → 02/89	8		119 **850**	119 **850**	
Princess			1968 → 02/74			116 **116**	116 **116**	
			1975 →			116 **125**	116 **125**	
AUTOBIANCHI								
A111 / A112 Abarth			1970 → 02/81			116 **120**	116 **120**	
A112 / A112E			1982 →			116 **122**	116 **122**	116 **120**
Bianchina			1975 →			116 **116**	116 **116**	
Primula			1969 → 10/70			116 **119**	116 **119**	
Y10		x1	09/84 →			116 **126**		
			09/84 →	8		119 **845**		
BENTLEY								
Arnage / Arnage T			10/04 → 10/09	4	119 **329**			
Azure / Azure T			04/06 → 02/11	4	119 **329**			
Bentayga			02/16 →	6	119 **463**			
Continental		Flying Spur	03/05 →	4	119 **329**			
		GT	01/04 →	4	119 **329**			
	2	GT Speed	04/08 →	4	119 **329**			
		GTC / Series 51	12/06 →	4	119 **329**			
		Supersports	09/09 →	4	119 **329**			
BMW								
1-Series	(E81)		03/07 → 12/11	2	119 **318**			119 **522**
			03/07 → 12/11	2	119 **316**			119 **522**
	(E87)		09/04 → 08/11	2	119 **318**			119 **522**
			09/04 → 08/11	2	119 **316**			119 **522**
	(E82)		11/07 → 02/14	2	119 **318**			
			11/07 → 02/14	2	119 **316**			
	(E88)		03/08 → 01/15	2	119 **318**			
			03/08 → 01/15	2	119 **316**			
	(F20)		09/11 →	2	119 **255**			116 **515**
	(F21)		09/12 →	2	119 **255**			116 **515**
2-Series	(F22)		03/14 →	2	119 **255**			
	(F23)		02/15 →	2	119 **255**			
	(F45)	Active Tourer	10/14 →	6	119 **431**			116 **515**
	(F46)	Gran Tourer	06/15 →	6	119 **431**			
3-Series	(E21)		06/75 → 03/79			116 **122**	116 **122**	
			04/79 → 08/82		116 **226**	116 **109**	116 **109**	
			04/79 → 08/82	– SPOILER –		116 **602**		
			04/79 → 08/82	8		119 **845**	119 **845**	
	(E30)		09/82 → 03/91		116 **220**	116 **112**	116 **112**	116 **109**
			09/82 → 03/91	– SPOILER –		116 **604**		
			09/82 → 03/91	8		119 **850**	119 **850**	116 **109**
			09/82 → 03/91		116 **220**	116 **112**	116 **112**	
			09/82 → 03/91	– SPOILER –		116 **604**		
			09/82 → 03/91	8		119 **850**	119 **850**	
		Touring	09/82 → 01/95		116 **220**	116 **112**	116 **112**	116 **109**
			09/82 → 01/95	– SPOILER –		116 **604**		
			09/82 → 01/95	8		119 **850**	119 **850**	116 **109**
	(E36)		04/91 → 04/98	– SPOILER –	116 **313**	116 **607**	116 **112**	
			04/91 → 04/98	8	119 **726**	119 **853**	119 **850**	

4

Flat Blade OE connections

❶ = ❷ = ❸ = ❹ =

❺ = ❻ = ❼ = ❽ =

OE Flachwischer Verbindungssysteme

For/Für			2 1/3	– SPOILER – HBLADE –				
▶ BMW (...)								
3-Series	(E36)		04/91 → 02/99	– SPOILER –	116 **313**	116 **607**	116 **112**	
			04/91 → 02/99	❽	119 **726**	119 **853**	119 **850**	
			04/91 → 02/96			116 **166**	116 **112**	
			04/91 → 02/96	– SPOILER –	116 **313**	116 **607**		
			04/91 → 02/96	❽	119 **726**	119 **853**	119 **850**	
			03/96 → 03/00		116 **220**	116 **134**	116 **112**	
			03/96 → 03/00	– SPOILER –	116 **313**	116 **607**		
			03/96 → 03/00	❽	119 **726**	119 **853**	119 **850**	
		Touring	02/95 → 10/99	– SPOILER –	116 **313**	116 **607**	116 **112**	116 **119**
			02/95 → 10/99	❽	119 **726**	119 **853**	119 **850**	116 **119**
		Compact 3	02/94 → 02/96		116 **220**	116 **112**	116 **112**	116 **109**
			02/94 → 02/96	– SPOILER –	116 **313**	116 **607**		
			02/94 → 02/96	❽		119 **850**	119 **850**	116 **109**
			03/96 → 06/01	– SPOILER –	116 **313**	116 **607**	116 **112**	116 **109**
			03/96 → 06/01	❽	119 **726**	119 **853**	119 **850**	116 **109**
	(E46)	4	05/98 → 02/05	– SPOILER –	116 **339**			
			05/98 → 02/05	❽	119 **745**	119 **855**	119 **850**	
			03/99 → 09/06	– SPOILER –	116 **339**			
			03/99 → 09/06	❽	119 **745**	119 **855**	119 **850**	
			04/00 → 09/06	– SPOILER –	116 **339**			
			04/00 → 09/06	❽	119 **745**	119 **855**	119 **850**	
		Touring	11/99 → 08/05	– SPOILER –	116 **339**			
			11/99 → 08/05	❽	119 **745**	119 **855**	119 **850**	
		Compact 3	07/01 →	– SPOILER –	116 **339**			
			07/01 →	❽	119 **745**	119 **855**	119 **850**	
	(E90)	4	03/05 → 09/09	❶	119 **312**			
			03/05 → 09/09	❶	119 **312**			
		4	10/09 → 01/12	❷	119 **284**			
	(E91)	Touring	09/05 → 09/09	❶	119 **312**			
			09/05 → 09/09	❶	119 **312**			
		Touring	10/09 → 08/12	❷	119 **284**			
	(E92)		09/06 → 09/09	❶	119 **291**			
			09/06 → 09/09	❶	119 **291**			
	(E92)/(E93)		10/09 → 02/14	❷	119 **283**			
	(E93)		01/07 → 09/09	❶	119 **291**			
			01/07 → 09/09	❶	119 **291**			
	(F30)	4	02/12 →	❷	119 **284**			
	(F31)	Touring	09/12 →	❷	119 **284**			
	(F34)	GT 5	06/13 →	❷	119 **284**			
4-Series	(F32)		10/13 →	❷	119 **277**			
	(F33)		03/14 →	❷	119 **277**			
	(F36)	Gran Coupé	06/14 →	❷	119 **277**			
5-Series	(E12)		10/72 → 09/75		116 **226**	116 **109**	116 **109**	
			10/72 → 09/75	– SPOILER –		116 **602**		
			09/75 → 02/79			116 **125**	116 **125**	
			09/75 → 02/79	– SPOILER –		116 **602**		
			04/79 → 06/81		116 **226**	116 **109**	116 **109**	
			04/79 → 06/81	– SPOILER –		116 **602**		
			04/79 → 06/81	❽		119 **845**	119 **845**	
	(E28)		07/81 → 12/87		116 **226**	116 **109**	116 **109**	
			07/81 → 12/87	– SPOILER –		116 **602**		
			07/81 → 12/87	❽		119 **845**	119 **845**	
	(E34)	4	01/88 → 09/95	– SPOILER –		116 **616**	116 **148**	
		Touring	01/88 → 02/97	– SPOILER –		116 **616**	116 **148**	116 **109**
	(E39)	4	11/95 → 09/03		116 **334**			
		Touring	03/97 → 02/04		116 **334**			
	(E60)	4	05/03 → 02/10	❼	119 **357**			
	(E61)	Touring	04/04 → 08/10	❼	119 **357**			116 **547**
	(F07)	GT 5	11/09 →	❶	119 **274**			
	(F10)	4	03/10 → 01/17	❶	119 **274**			
	(F11)	Touring	09/10 →	❶	119 **274**			
6-Series	(E24)		01/76 → 02/79			116 **125**	116 **125**	
			04/79 → 05/89		116 **226**	116 **109**	116 **109**	
			04/79 → 05/89	– SPOILER –		116 **602**		
			04/79 → 05/89	❽		119 **845**	119 **845**	
	(E63)		01/04 → 02/11	❷	119 **280**			
	(E64)		01/04 → 09/11	❷	119 **280**			

4

Flat Blade OE connections

❶ = ❷ = ❸ = ❹ =

❺ = ❻ = ❼ = ❽ =

OE Flachwischer Verbindungssysteme

For/Für			2	– SPOILER – – HBLADE –				
▶ BMW (...)								
6-Series	(F12)		03/11 →	❶	119 **351**			
	(F13)		09/11 →	❶	119 **351**			
	(F06)	Gran Coupé	06/12 →	❶	119 **351**			
7-Series	(E23)		05/77 → 09/79			116 **125**	116 **125**	
			04/79 → 08/86		116 **226**	116 **109**	116 **109**	
			04/79 → 08/86	– SPOILER –		116 **602**		
			04/79 → 08/86	❽		119 **845**	119 **845**	
	(E32)		09/86 → 09/94	– SPOILER –		116 **616**	116 **148**	
	(E38)		06/94 → 02/01	– SPOILER –		116 **616**	116 **615**	
	(F01) / (F02)		11/08 → 09/15	❶	119 **274**			
	(G11) / (G12)		10/15 →	❻	119 **431**			
8-Series	(E31)		09/89 →	– SPOILER –		116 **616**	116 **148**	
M2	(F22)		03/14 →	❷	119 **255**			
M3	(E30)		08/82 → 03/91		116 **220**	116 **112**	116 **112**	
			08/82 → 03/91	– SPOILER –		116 **604**		
			08/82 → 03/91	❽		119 **850**	119 **850**	
	(E36)		04/91 → 11/00		116 **220**	116 **134**	116 **112**	
			04/91 → 11/00	– SPOILER –	116 **313**	116 **607**		
			04/91 → 11/00	❽		119 **853**	119 **850**	
	(E46)		12/00 → 09/06	– SPOILER –	116 **339**	116 **606**	116 **112**	
	(E90)		04/08 → 09/09	❶	119 **312**			
			04/08 → 09/09	❶	119 **312**			
			10/09 → 02/14	❷	119 **284**			
	(E92)		09/07 → 09/09	❶	119 **291**			
			09/07 → 09/09	❶	119 **291**			
			10/09 → 02/14	❷	119 **283**			
	(E93)		10/09 →	❷	119 **283**			
	(F80)		03/14 →	❷	119 **284**			
M4	(F82)		03/14 →	❷	119 **277**			
	(F83)		07/14 →	❷	119 **277**			
M5	(E34)		10/88 → 09/98	– SPOILER –		116 **616**	116 **148**	
		Touring	10/88 → 02/98	– SPOILER –		116 **616**	116 **148**	
	(E39)		10/98 → 09/04		116 **334**			
	(E60)		01/05 → 02/10	❼	119 **357**			
	(F10)		12/11 → 01/17	❶	119 **274**			
M6	(E63)		01/04 → 02/11	❷	119 **280**			
	(E64)		01/04 → 09/11	❷	119 **280**			
M535i	(E12)		04/79 → 06/81		116 **226**	116 **109**	116 **109**	
			04/79 → 06/81	– SPOILER –		116 **602**		
			04/79 → 06/81	❽		119 **845**	119 **845**	
	(E28)		06/81 → 12/87		116 **226**	116 **109**	116 **109**	
			06/81 → 12/87	– SPOILER –		116 **602**		
			06/81 → 12/87	❽		119 **845**	119 **845**	
M635 Csi	(E24)		03/84 → 05/89		116 **226**	116 **109**	116 **109**	
			03/84 → 05/89	– SPOILER –		116 **602**		
			03/84 → 05/89	❽		119 **845**	119 **845**	
X1	(E84)		10/09 → 09/15	❷	119 **284**			119 **526**
	(F48)		10/15 →	❻	119 **271**			119 **527**
X3	(E83)		01/04 → 10/10			116 **166**	116 **112**	116 **546**
			01/04 → 10/10	– SPOILER –		116 **606**		
			01/04 → 10/10	❽	119 **742**	119 **855**	119 **850**	116 **546**
	(F25)		11/10 →	❶	119 **282**			
			11/10 →	❶	119 **282**			
X4	(F26)		07/14 →	❶	119 **282**			
			07/14 →	❶	119 **282**			
X5	(E53)		05/00 → 02/07	– SPOILER –		116 **619**	116 **166**	116 **109**
			05/00 → 02/07	❽		119 **860**	119 **855**	116 **109**
	(E70)		03/07 → 09/11	❶	119 **374**			119 **511**
			03/07 → 09/11	❶	119 **374**			119 **511**
			10/11 → 10/13	❻	119 **268**			119 **511**
	(F15)		11/13 →			116 **148**	116 **112**	116 **515**
			11/13 →	❽	119 **746**			116 **515**
			11/13 →			116 **148**	116 **112**	116 **515**
X6	(E71)		05/08 → 09/11	❶	119 **374**			
			10/11 → 07/14	❻	119 **268**			
	(F16)		12/14 →			116 **148**	116 **112**	
			12/14 →	❽	119 **746**			

Flat Blade OE connections

❶ = ❷ = ❸ = ❹ =

❺ = ❻ = ❼ = ❽ =

OE Flachwischer Verbindungssysteme

For/Für			2 3	– SPOILER – – HBLADE –				
BMW (...)								
X6	(F16)		12/14 →			116 **148**	116 **112**	
Z1			11/88 → 1991		116 **220**	116 **112**	116 **112**	
			11/88 → 1991	– SPOILER –		116 **604**		
			11/88 → 1991	8		119 **850**	119 **850**	
Z4	(E85)		03/03 → 04/09	8		119 **850**	119 **850**	
	(E89)		05/09 →	8		119 **853**	119 **850**	
CADILLAC								
BLS			10/07 →	2	119 **308**			
		Wagon	10/07 →	2	119 **308**			
Escalade / ESV / EXT			02/06 → 10/10	2	119 **253**			
Escalade			01/11 →	8		119 **855**	119 **855**	
CASALINI								
Kerry		x1	2011 →			116 **148**		
M10		x1	01/10 → 12/13			116 **148**		
M12		x1	2011 →			116 **148**		
Pickup 12 / Cross		x1	2011 →			116 **148**		
CHEVROLET								
Aveo	(T250, T255)	3	05/08 → 01/12	8	119 **744**	119 **855**	119 **840**	
		4	03/06 → 01/11	8	119 **744**	119 **855**	119 **840**	
		5	03/06 → 01/11			116 **166**	116 **121**	116 **109**
			03/06 → 01/11	8	119 **744**	119 **855**	119 **840**	116 **109**
	(T300)	4	06/11 →	2	119 **352**	119 **334**		
		5	04/11 →	2	119 **352**	119 **334**		
Camaro			01/09 → 05/16	– HBLADE – 8		116 **183**	116 **179**	
			01/09 → 05/16	8	119 **764**	119 **860**	119 **853**	
			01/09 → 05/16	8		119 **860**	119 **853**	
			09/11 → 05/16	– HBLADE – 8		116 **183**	116 **179**	
			09/11 → 05/16	8	119 **764**	119 **860**	119 **853**	
			09/11 → 05/16	8		119 **860**	119 **853**	
Captiva			09/06 →			116 **148**	116 **121**	
			09/06 →	8		119 **860**	119 **840**	
Cruze		4	05/09 →	– HBLADE – 8		116 **183**	116 **176**	
			05/09 →	8	119 **761**	119 **860**	119 **845**	
			05/09 →	8		119 **860**	119 **845**	
		5	09/11 →	– HBLADE – 8		116 **183**	116 **176**	
			09/11 →	8	119 **761**	119 **860**	119 **845**	
			09/11 →	8		119 **860**	119 **845**	
		SW	09/12 →	– HBLADE – 8		116 **183**	116 **176**	
			09/12 →	8	119 **761**	119 **860**	119 **845**	
			09/12 →	8		119 **860**	119 **845**	
Epica			07/06 →			116 **166**	116 **112**	
			07/06 →	– SPOILER –		116 **606**		
			07/06 →	8		119 **855**	119 **850**	
Kalos			03/05 → 06/08			116 **166**	116 **121**	
			03/05 → 06/08	– SPOILER –		116 **606**		
			03/05 → 06/08	8		119 **855**	119 **840**	
Lacetti			03/05 →			116 **166**	116 **126**	116 **109**
			03/05 →	– SPOILER –		116 **606**		
			03/05 →	8		119 **855**	119 **848**	116 **109**
Malibu			09/12 →			116 **148**	116 **126**	
			09/12 →	– HBLADE – 8		116 **183**	116 **177**	
			09/12 →	8	119 **762**	119 **860**	119 **848**	
			09/12 →			116 **148**	116 **126**	
			09/12 →	8	119 **762**	119 **860**	119 **848**	
Matiz			03/05 →			116 **134**	116 **121**	
			03/05 →	– SPOILER –		116 **607**		
			03/05 →	8		119 **855**	119 **835**	
Nubira			03/05 →			116 **166**	116 **126**	
			03/05 →	– SPOILER –		116 **606**		
			03/05 →	8		119 **855**	119 **848**	
		SW	03/05 →			116 **166**	116 **126**	
			03/05 →	– SPOILER –		116 **606**		
			03/05 →	8		119 **855**	119 **848**	
Orlando			02/11 →	– HBLADE – 8		116 **183**	116 **176**	
			02/11 →	8		119 **860**	119 **850**	

4

Flat Blade OE connections

❶ = ❷ = ❸ = ❹ =

OE Flachwischer Verbindungssysteme

❺ = ❻ = ❼ = ❽ =

For/Für				– SPOILER – – HBLADE –				
CHEVROLET (...)								
Orlando			02/11 →	8		119 860	119 850	
Rezzo / Tacuma			03/05 →			116 148	116 126	116 120
			03/05 →	8		119 860	119 848	116 120
Spark			03/10 →			116 166	116 120	
Suburban			01/07 → 12/07	2	119 253			
Tahoe			01/07 → 12/07	2	119 253			
Trafic			1997 → 2002		116 220	116 112	116 112	
			1997 → 2002	8		119 850	119 850	
Tracker	1		1999 → 02/13	8		119 845	119 845	
	2		03/13 →	6	119 278			
Trax			03/13 →	6	119 278			
Volt			01/11 →	6	119 281			
CHRYSLER								
300 C		4	03/04 →		116 222	116 166	116 166	
			03/04 →	– SPOILER –		116 606		
			03/04 →	8		119 855	119 855	
			03/04 →		116 222	116 166	116 166	
			03/04 →	– SPOILER –		116 606		
			03/04 →	8		119 855	119 855	
300 M			03/98 →			116 148	116 166	
			03/98 →	8		119 860	119 855	
Crossfire			03/03 →			116 112	116 166	
			03/03 →	8		119 850	119 853	
ES			1989 →			116 125	116 125	
GS Turbo 2			1989 →			116 125	116 125	
Neon			06/94 → 10/99			116 134	116 109	
			06/94 → 10/99	8		119 853	119 845	
			11/99 →			116 166	116 126	
			11/99 →	8		119 855	119 848	
New-Yorker						116 148	116 148	
				8		119 860	119 860	
PT Cruiser		5	06/00 →		116 220	116 112	116 134	
			06/00 →	8		119 850	119 853	
			03/04 →	8		119 850	119 853	
Sebring		4	04/01 → 2006		116 222	116 166	116 166	
			04/01 → 2006	– SPOILER –		116 606		
			04/01 → 2006	8		119 855	119 855	
			03/07 →			116 148	116 166	
			03/07 →	8		119 860	119 855	
			04/01 → 2006		116 222	116 166	116 166	
			04/01 → 2006	– SPOILER –		116 606		
			04/01 → 2006	8		119 855	119 855	
			10/07 →			116 148	116 166	
			10/07 →	8		119 860	119 855	
Stratus		4			116 222	116 166	116 166	
				– SPOILER –		116 606		
				8		119 855	119 855	
					116 222	116 166	116 166	
				– SPOILER –		116 606		
				8		119 855	119 855	
Viper			12/93 →			116 121	116 121	
			12/93 →	8		119 840	119 840	
Voyager / Grand Voyager	2		1991 → 03/96			116 166	116 109	
			1991 → 03/96	8		119 855	119 845	
	3		03/96 → 02/01			116 140	116 140	116 109
			03/96 → 02/01	8	119 785	119 865	119 865	116 109
	4		04/01 → 03/08			116 137	116 137	
			04/01 → 03/08	8	119 785	119 865	119 865	
	5		04/08 →			116 137	116 112	116 550
			04/08 →	8		119 860	119 850	116 550
CITROËN								
2 CV			1970 → 07/90			116 117	116 117	
Acadiane (Azu-Ak)						116 116	116 116	
Ami 6			1961 → 1969			116 116	116 116	
Ami 8 / Ami Super			01/69 → 12/78			116 119	116 119	
AX		x1	1986 → 07/98			116 166		116 121

Flat Blade OE connections

❶ = ❷ = ❸ = ❹ =

❺ = ❻ = ❼ = ❽ =

OE Flachwischer Verbindungssysteme

For/Für			2	– SPOILER – – HBLADE –				
CITROËN (...)								
AX		x1	1986 → 07/98	8		119 855		116 121
Axel		x1	1984 → 1989			116 126		116 109
			1984 → 1989	8		119 848		
Berlingo	1 / First		06/96 →		116 222	116 166	116 166	116 119
			06/96 →	– SPOILER –		116 606		
			06/96 →	8		119 855	119 855	116 119
			01/97 → 10/02		116 222	116 166	116 166	116 121
			01/97 → 10/02	– SPOILER –		116 606		
			01/97 → 10/02	8		119 855	119 855	116 121
			11/02 → 05/08		116 222	116 166	116 166	
			11/02 → 05/08	– SPOILER –		116 606		
			11/02 → 05/08	8		119 855	119 855	
	2		05/08 →	6	119 429			116 540
BX		x1	10/82 →			116 112		116 112
			10/82 →	8		119 850		
		x1	10/82 →			116 112		116 112
			10/82 →	8		119 850		
C-Crosser			07/07 → 12/12			116 148	116 134	116 515
			07/07 → 12/12	– HBLADE – 8		116 183	116 179	116 515
			07/07 → 12/12	8		119 860	119 853	116 515
			07/07 → 12/12			116 148	116 112	116 515
			07/07 → 12/12	8		119 860	119 850	116 515
C-Elysée			11/12 →	3	119 330			
C-Zero		x1	01/11 →	– HBLADE – 8		116 187		116 515
			01/11 →	8		119 865		
			01/11 →	8		119 865		116 515
C1	1	x1	06/05 → 05/14			116 137		116 510
			06/05 → 05/14	8		119 865		
	2	x1	06/14 →	2		119 334		116 513
C15		x1				116 126		116 121
				8		119 848		
C2			09/03 →	– SPOILER –	116 346			116 530
			09/03 →	8	119 761	119 860	119 845	
C22 / C25 / C32 / C35					116 220	116 112	116 112	
				– SPOILER –		116 604		
				8		119 850	119 850	
C3		Pluriel	04/02 → 10/09	– SPOILER –	116 346			116 540
			04/02 → 10/09	8	119 761	119 860	119 845	
	2	Picasso	11/09 → 10/16	3	119 396			116 520
C3 Classic			11/09 → 01/11	– SPOILER –	116 346			116 540
			11/09 → 01/11	8	119 761	119 860	119 845	
C3 Picasso			03/09 → 04/10	6	119 378			116 530
			05/10 →	3	119 330			116 530
C3 Pluriel			04/03 →			116 166	116 109	
			04/03 →	8		119 855	119 845	
C4			11/04 → 09/10	2	119 391			
		Picasso	11/04 → 09/10	2	119 391			116 516
			10/10 →	6	119 452			116 530
C4 Aircross			04/12 →			116 148	116 134	
			04/12 →	– HBLADE – 8		116 183	116 179	
			04/12 →	8	119 764	119 860	119 853	
			04/12 →			116 148	116 112	
			04/12 →	8		119 860	119 850	
C4 Picasso			10/06 → 05/08	1	119 451			116 546
			06/08 → 05/13	3	119 454			116 546
			06/13 →	6	119 458			116 546
Grand C4 Picasso			10/13 →	6	119 458			116 516
C5	1		03/01 → 02/03	– SPOILER –		116 618	116 126	116 570
			03/01 → 02/03	8		119 865	119 845	116 570
			03/03 → 11/03	– SPOILER –		116 618	116 126	116 550
			03/03 → 11/03	8		119 865	119 845	116 550
			12/03 → 08/04	1	119 393			116 550
			09/04 → 03/08	1	119 393			119 507
			07/01 → 11/03	– SPOILER –		116 618	116 126	116 530
			07/01 → 11/03	8		119 865	119 845	116 530
			12/03 → 04/08	1	119 393			116 530
	2		04/08 →	2	119 426			

Flat Blade OE connections

❶ = ❷ = ❸ = ❹ =

OE Flachwischer Verbindungssysteme

❺ = ❻ = ❼ = ❽ =

For/Für			2	– SPOILER – – HBLADE –				
CITROËN (...)								
C5	2	Tourer	05/08 →	❷	119 **426**			119 **520**
C6			10/05 →	❶	119 **389**			
C8			06/02 → 08/05	– SPOILER –	116 **352**			116 **540**
CX		x1	1974 →			116 **148**		
			1974 →	❽		119 **860**		
		x1	1974 →			116 **148**		116 **121**
			1974 →	❽		119 **860**		
D / DS / ID			1969 →			116 **119**	116 **119**	
Dispatch			10/95 → 12/06			116 **137**	116 **112**	
			10/95 → 12/06	❽		119 **865**	119 **850**	
			01/07 → 07/16	❽		119 **865**		
DS3			03/10 →	❸	119 **287**			116 **530**
DS3 Cabrio			01/13 →	❸	119 **287**			
DS4			05/11 →	❻	119 **452**			
DS5			11/11 →	❻	119 **447**			
Dyane			1967 → 1983			116 **116**	116 **116**	
Evasion			06/94 → 05/02			116 **137**	116 **112**	116 **121**
			06/94 → 05/02	❽		119 **865**	119 **850**	116 **121**
GS / GSA			1971 → 1986			116 **121**	116 **121**	116 **121**
			1971 → 1986			116 **121**	116 **121**	116 **121**
H						116 **116**	116 **116**	
Jumper	1/2		02/94 → 06/06		116 **222**	116 **166**	116 **166**	
			02/94 → 06/06	– SPOILER –		116 **606**		
			02/94 → 06/06	❽		119 **855**	119 **855**	
	3		07/06 →	❻	119 **416**			
Jumpy	1/2		10/95 → 12/06			116 **137**	116 **112**	
			10/95 → 12/06	❽		119 **865**	119 **850**	
	3		01/07 → 05/16			116 **137**	116 **112**	116 **540**
			01/07 → 05/16	❽		119 **865**	119 **850**	116 **540**
			01/07 → 05/16			116 **137**	116 **112**	NEW 116 **518**
			01/07 → 05/16	❽		119 **865**	119 **850**	NEW 116 **518**
	4		06/16 →	❸	NEW 119 **466**			116 **540**
			06/16 →	❸	NEW 119 **466**			116 **520**
LN / LNA			1977 → 1980			116 **119**	116 **119**	
			1980 → 12/81			116 **119**		
			01/82 → 1986			116 **122**	116 **121**	
Mehari			1966 → 1988			116 **116**	116 **116**	
Némo			02/08 →	❸	119 **408**			115 **715**
Relay			02/94 → 06/06		116 **222**	116 **166**	116 **166**	
Saxo			02/96 → 08/99		116 **307**	116 **112**	116 **109**	116 **121**
			02/96 → 08/99	– SPOILER –		116 **604**		
			02/96 → 08/99	❽		119 **850**	119 **845**	116 **121**
			09/99 → 04/04		116 **307**	116 **112**	116 **109**	116 **540**
			09/99 → 04/04	– SPOILER –		116 **604**		
			09/99 → 04/04	❽		119 **850**	119 **845**	116 **540**
SpaceTourer			06/16 →	❸	NEW 119 **466**			116 **540**
			06/16 →	❸	NEW 119 **466**			116 **520**
Synergie			06/94 → 04/02			116 **137**	116 **112**	116 **121**
			06/94 → 04/02	❽		119 **865**	119 **850**	116 **121**
Visa / Visa 2		x1	09/78 → 12/88			116 **126**		116 **126**
Xantia			03/93 → 12/97			116 **148**	116 **112**	116 **109**
			03/93 → 12/97	– SPOILER –		116 **615**		
			03/93 → 12/97	❽		119 **860**	119 **850**	116 **109**
			01/98 →	– SPOILER –		116 **615**	116 **126**	116 **109**
			01/98 →	❽		119 **860**	119 **848**	116 **109**
			07/95 → 12/97	– SPOILER –		116 **615**	116 **112**	116 **121**
			07/95 → 12/97	❽		119 **860**	119 **850**	116 **121**
			01/98 → 11/99	– SPOILER –		116 **615**	116 **126**	116 **121**
			01/98 → 11/99	❽		119 **860**	119 **848**	116 **121**
			12/99 →	– SPOILER –		116 **615**	116 **126**	116 **540**
			12/99 →	❽		119 **860**	119 **848**	116 **540**
XM			04/89 → 06/94		116 **222**	116 **166**	116 **166**	116 **109**
			04/89 → 06/94	– SPOILER –		116 **606**		
			04/89 → 06/94	❽		119 **855**	119 **855**	116 **109**
			07/94 →	❽		119 **855**		
			09/91 →		116 **222**	116 **166**	116 **166**	116 **121**
			09/91 →	– SPOILER –		116 **606**		

Flat Blade OE connections

❶ = ❷ = ❸ = ❹ =

❺ = OE Flachwischer Verbindungssysteme ❻ = ❼ = ❽ =

For/Für			2	– SPOILER – – HBLADE –				
CITROËN (...)								
XM			09/91 →	8		119 **855**	119 **855**	116 **121**
Xsara			09/97 → 11/04			116 **166**	116 **112**	116 **109**
			09/97 → 11/04	– SPOILER –		116 **606**		
			09/97 → 11/04	8	119 **742**	119 **855**	119 **850**	116 **109**
			01/98 → 11/04	– SPOILER –		116 **606**	116 **112**	116 **109**
			01/98 → 11/04	8	119 **742**	119 **855**	119 **850**	116 **109**
			03/98 →	– SPOILER –		116 **606**	116 **112**	116 **550**
			03/98 →	8	119 **742**	119 **855**	119 **850**	116 **550**
Xsara Picasso			12/99 → 09/05			116 **137**	116 **137**	116 **550**
			12/99 → 09/05	8		119 **865**	119 **860**	116 **550**
			09/05 → 09/10	1	119 **415**			116 **550**
ZX		x1	03/91 →			116 **166**		116 **109**
			03/91 →	8		119 **855**		
		x1	11/93 →			116 **166**		116 **119**
			11/93 →	8		119 **855**		
DACIA								
1300 / 1301 / 1302			1969 → 1985			116 **121**	116 **121**	
1304 / 1305 / 1307 / 1309			1982 → 2006			116 **121**	116 **121**	
1310 / 1410			1979 → 2004			116 **121**	116 **121**	
1320			1987 → 1991			116 **121**	116 **121**	
1325 / 1325 Liberta			1991 → 1996			116 **121**	116 **121**	
2000			1981 → 1982		116 **226**	116 **109**	116 **109**	
Dokker			09/12 → 05/15			116 **166**	116 **121**	116 **500**
			09/12 → 05/15	8	119 **744**	119 **855**	119 **840**	116 **500**
		Van	10/12 → 05/15			116 **166**	116 **121**	116 **500**
		Van	10/12 → 05/15	8	119 **744**	119 **855**	119 **840**	116 **500**
		Pick up	10/12 → 11/15			116 **166**	116 **121**	
		Pick up	10/12 → 11/15	8	119 **744**	119 **855**	119 **840**	
Dokker / Dokker Stepway			06/15 → 11/15			116 **166**	116 **121**	116 **530**
			06/15 → 11/15	8	119 **744**	119 **855**	119 **840**	116 **530**
Dokker Van			06/15 → 11/15			116 **166**	116 **121**	116 **530**
			06/15 → 11/15	8	119 **744**	119 **855**	119 **840**	116 **530**
Duster			04/10 → 05/12		116 **220**	116 **112**	116 **112**	116 **520**
			04/10 → 05/12	8		119 **850**	119 **850**	116 **520**
			06/12 → 10/14		116 **220**	116 **112**	116 **112**	116 **540**
			06/12 → 10/14	8		119 **850**	119 **850**	116 **540**
			06/12 →			116 **112**	116 **112**	116 **540**
			06/12 →	8		119 **850**	119 **850**	116 **540**
			11/14 → 10/16			116 **148**	116 **109**	116 **540**
Lodgy			04/12 → 10/15			116 **166**	116 **121**	116 **530**
			04/12 → 10/15	8	119 **744**	119 **855**	119 **840**	116 **530**
Logan	1		05/04 → 12/12		116 **220**	116 **112**	116 **112**	
			05/04 → 12/12	8		119 **850**	119 **850**	
		Pick up	03/08 → 11/12		116 **220**	116 **112**	116 **112**	
		Pick up	03/08 → 11/12	8		119 **850**	119 **850**	
		MCV	01/07 → 11/12		116 **220**	116 **112**	116 **112**	116 **540**
		MCV	01/07 → 11/12	8		119 **850**	119 **850**	116 **540**
		Van	03/08 → 11/12		116 **220**	116 **112**	116 **112**	
		Van	03/08 → 11/12	8		119 **850**	119 **850**	
	2		12/12 → 02/15			116 **166**	116 **112**	
			12/12 → 02/15	8	119 **742**	119 **855**	119 **850**	
			03/15 →	3	119 **313**			
		MCV	09/13 → 02/15			116 **166**	116 **112**	116 **530**
		MCV	09/13 → 02/15	8	119 **742**	119 **855**	119 **850**	116 **530**
		MCV	03/15 →	3	119 **313**			116 **530**
Sandero	1		06/08 → 11/12	8		119 **850**	119 **850**	116 **550**
	2		12/12 → 02/15			116 **166**	116 **112**	116 **530**
			12/12 → 02/15	8	119 **742**	119 **855**	119 **850**	116 **530**
Sandero / Stepway	2		03/15 →	3	119 **313**			116 **530**
DAEWOO								
Espero			09/93 →		116 **218**	116 **126**	116 **126**	
			09/93 →	– SPOILER –		116 **623**		
			09/93 →	8		119 **848**	119 **848**	
Evanda			04/03 →			116 **166**	116 **112**	
			04/03 →	8		119 **855**	119 **850**	
Kalos			09/02 →			116 **166**	116 **121**	116 **120**

4

Flat Blade OE connections

❶ = ❷ = ❸ = ❹ =

OE Flachwischer Verbindungssysteme

❺ = ❻ = ❼ = ❽ =

For/Für			2+3	– SPOILER – – HBLADE –				
DAEWOO (...)								
Kalos			09/02 →			116 **606**	116 **121**	116 **120**
			09/02 →	❽		119 **855**	119 **840**	116 **120**
Korando			10/96 →		116 **226**	116 **109**	116 **109**	
			10/96 →	– SPOILER –		116 **602**		
			10/96 →	❽		119 **845**	119 **845**	
Lacetti			02/04 →	❽		119 **855**	119 **848**	
Lanos		3 5	1997 → 02/04		116 **218**	116 **126**	116 **126**	116 **126**
			1997 → 02/04	– SPOILER –		116 **623**		
			1997 → 02/04	❽		119 **848**	119 **848**	116 **126**
		4	1997 → 02/04		116 **218**	116 **126**	116 **126**	
			1997 → 02/04	– SPOILER –		116 **623**		
			1997 → 02/04	❽		119 **848**	119 **848**	
Leganza			1997 → 04/03			116 **166**	116 **126**	
			1997 → 04/03	❽		119 **855**	119 **848**	
Matiz			09/98 → 02/05			116 **134**	116 **121**	116 **119**
			09/98 → 02/05	– SPOILER –		116 **607**		
			09/98 → 02/05	❽		119 **853**	119 **840**	116 **119**
Musso			10/94 →		116 **307**	116 **112**	116 **109**	116 **119**
			10/94 →	❽		119 **850**	119 **845**	116 **119**
Nexia		4	03/95 → 12/99		116 **226**	116 **109**	116 **109**	
			03/95 → 12/99	– SPOILER –	116 **301**	116 **602**		
			03/95 → 12/99	❽		119 **845**	119 **845**	
		3 5	03/95 → 10/99		116 **226**	116 **109**	116 **109**	116 **109**
			03/95 → 10/99	– SPOILER –	116 **301**	116 **602**		
			03/95 → 10/99	❽		119 **845**	119 **845**	116 **109**
Nubira	1 / 2	4	1997 → 05/03		116 **220**	116 **112**	116 **112**	
			1997 → 05/03	– SPOILER –		116 **604**		
			1997 → 05/03	❽		119 **850**	119 **850**	
		5	1997 → 05/03		116 **220**	116 **112**	116 **112**	116 **109**
			1997 → 05/03	– SPOILER –		116 **604**		
			1997 → 05/03	❽		119 **850**	119 **850**	116 **109**
			1997 → 12/04		116 **220**	116 **112**	116 **112**	
			1997 → 12/04	– SPOILER –		116 **604**		
			1997 → 12/04	❽		119 **850**	119 **850**	
	3	4	06/03 →			116 **166**	116 **126**	
			06/03 →	– SPOILER –		116 **606**		
			06/03 →	❽		119 **855**	119 **848**	
		SW	01/05 →			116 **166**	116 **126**	
			01/05 →	– SPOILER –		116 **606**		
			01/05 →	❽		119 **855**	119 **848**	
Tacuma			04/00 →			116 **148**	116 **126**	116 **120**
			04/00 →	❽		119 **860**	119 **848**	116 **120**
Rezzo			10/00 →			116 **148**	116 **126**	116 **120**
			10/00 →	❽		119 **860**	119 **848**	116 **120**
DAIHATSU								
Applause			1990 → 10/97			116 **125**	116 **125**	116 **122**
			09/97 →			116 **125**		116 **109**
Bus-Wide 55			1978 → 10/82			116 **119**	116 **119**	
Cabran			1983 →			116 **119**	116 **119**	
Charade			1978 → 10/83			116 **121**	116 **121**	
			10/83 → 12/87			116 **125**	116 **125**	
			03/87 → 10/92			116 **125**	116 **125**	
		3 5	1993 →		116 **226**	116 **126**	116 **109**	116 **120**
			1993 →	– SPOILER –		116 **623**		
			1993 →	❽		119 **848**	119 **845**	116 **120**
		4	1993 →		116 **226**	116 **126**	116 **109**	
			1993 →	– SPOILER –		116 **623**		
			1993 →	❽		119 **848**	119 **845**	
Charmant			→ 10/80			116 **119**	116 **119**	
			1982 →			116 **125**	116 **125**	
Compagno			→ 10/78			116 **119**	116 **119**	
Consorte			1971 → 12/74			116 **119**	116 **119**	
Cuore	(L55/ L60)		1980 → 10/85			116 **122**	116 **122**	
	(L80)		1985 → 12/90			116 **125**	116 **125**	
			1990 → 10/91			116 **124**	116 **122**	
	(L201)		1991 → 10/03			116 **109**	116 **121**	

4

❶ = ❷ = ❸ = ❹ = Flat Blade OE connections

❺ = ❻ = ❼ = ❽ = OE Flachwischer Verbindungssysteme

For/Für			2	– SPOILER – – HBLADE –				
DAIHATSU (...)								
Cuore	(L201)		1991 → 10/03	– SPOILER –		116 **602**	116 **121**	
			1991 → 10/03	8		119 **845**	119 **840**	
	(L251)		11/03 → 06/07			116 **134**	116 **116**	116 **513**
			07/07 →			116 **166**	116 **116**	116 **513**
Domino			1980 → 10/85			116 **122**	116 **112**	
			1991 →			116 **109**	116 **121**	
			1991 →	– SPOILER –		116 **602**		
			1991 →	8		119 **845**	119 **840**	
Extol						116 **126**	116 **121**	116 **120**
				8		119 **848**	119 **840**	116 **120**
Feroza / Sportrak			1989 →			116 **122**	116 **124**	
Gran Move			03/97 →		116 **218**	116 **112**	116 **126**	
Hijet			1986 → 12/89			116 **121**	116 **121**	
			12/92 →			116 **121**	116 **120**	116 **119**
Materia			01/07 →	8		119 **850**	119 **848**	
Mira			1980 → 10/91			116 **109**	116 **121**	
			1992 →			116 **119**	116 **119**	
Move			03/97 → 10/99			116 **109**	116 **119**	116 **119**
Rocky			1984 →			116 **122**	116 **122**	116 **120**
Sirion			→ 09/04		116 **226**	116 **126**	116 **109**	116 **119**
			→ 09/04	8		119 **848**	119 **845**	116 **119**
			02/05 → 12/13			116 **112**	116 **121**	
			02/05 → 12/13	8		119 **850**	119 **840**	
Sparcar 850			1983 →			116 **119**	116 **119**	
Terios			1998 → 04/06			116 **112**	116 **119**	116 **119**
			1998 → 04/06	– SPOILER –		116 **604**		
			1998 → 04/06	8		119 **850**	119 **835**	116 **119**
			05/06 → 10/13	8		119 **853**	119 **845**	116 **513**
Trevis			10/06 →	8		119 **850**	119 **840**	
Twin Cam			1988 →			116 **125**	116 **125**	
Wildcat			1986 →			116 **122**	116 **122**	
YRV			01/01 →			116 **134**	116 **119**	
			01/01 →	8		119 **853**	119 **835**	
DODGE								
Avenger			09/07 → 01/11			116 **148**	116 **166**	
			09/07 → 01/11	8		119 **860**	119 **855**	
Caliber			06/06 → 01/12			116 **148**	116 **121**	
			06/06 → 01/12	8		119 **860**	119 **840**	
Caravan			03/96 → 12/01			116 **140**	116 **140**	
Journey			06/08 → 01/12			116 **148**	116 **126**	
			06/08 → 01/12	8		119 **860**	119 **845**	
Nitro			03/07 → 01/12		116 **218**	116 **126**	116 **126**	116 **510**
			03/07 → 01/12	– SPOILER –		116 **623**		
			03/07 → 01/12	8		119 **848**	119 **848**	116 **510**
DS								
DS 3			03/10 →	3	119 **287**			116 **530**
			03/10 →	3	119 **287**			116 **530**
DS 3 Cabrio			01/13 →	3	119 **287**			
DS 4			05/11 →	6	119 **452**			
		Crossback	11/15 →	6	119 **452**			
DS 5			11/11 →	6	119 **447**			
DUE								
Dué First	1	x1	2011 → 10/12			116 **166**		
Dué	2	x1	01/13 →			116 **148**		
FERRARI								
348 TB / TS			1990 →		116 **220**	116 **112**	116 **112**	
Mondial			04/89 →		116 **218**	116 **126**	116 **126**	
Testarossa			1984 →		116 **220**	116 **112**	116 **112**	
			1984 →	– SPOILER –		116 **604**		
FIAT								
124		~~Coupé~~	01/68 → 12/75			116 **120**	116 **120**	
	Sport		01/68 → 10/75			116 **119**	116 **119**	
	Spider		06/16 →			116 **109**	116 **126**	
			06/16 →	– HBLADE – 8		116 **176**	116 **177**	
			06/16 →	8		119 **845**	119 **848**	

4

Flat Blade OE connections

❶ = ❷ = ❸ = ❹ =

OE Flachwischer Verbindungssysteme

❺ = ❻ = ❼ = ❽ =

For/Für			2	– SPOILER – – HBLADE –				
FIAT (...)								
124	Spider		06/16 →			116 **109**	116 **126**	
			06/16 →	8		119 **845**	119 **848**	
125			01/66 → 12/74			116 **119**	116 **119**	
126			01/72 → 10/87			116 **119**	116 **119**	
			01/87 →			116 **119**		
127			→ 10/85			116 **119**	116 **120**	
		3 5	→ 12/85			116 **119**	116 **120**	
128			01/69 → 10/81			116 **120**	116 **120**	
	Berlinetta		10/69 → 12/81			116 **120**	116 **120**	
130			→ 10/75			116 **120**	116 **120**	
131	Mirafiori		11/74 →			116 **120**	116 **120**	116 **120**
132			10/72 → 10/81			116 **120**	116 **120**	
133			01/75 → 12/81			116 **120**	116 **120**	
238 / 241						116 **120**	116 **120**	
500 / 600			1957 → 12/75			116 **116**	116 **116**	
500		3	07/07 →	6	119 **290**			116 **530**
500 C			06/09 →	6	119 **290**			
500 L	Trekking	5	10/12 →	6	119 **278**			116 **530**
	Living	5	09/13 →	6	119 **278**			
500 X			02/15 →	6	119 **278**			116 **530**
850 / 1100 / 1200						116 **116**	116 **116**	
1500 / 1800 / 2300						116 **119**	116 **119**	
Aegea		4	11/15 →	6	119 **265**			
		5	06/16 →	6	119 **265**			
Albea			01/02 → 12/12			116 **166**	116 **109**	
			01/02 → 12/12	8		119 **855**	119 **845**	
Argenta			04/81 → 12/86			116 **122**	116 **121**	116 **120**
			04/81 → 12/86	– SPOILER –		116 **601**		
Barchetta			05/95 →		116 **218**	116 **126**	116 **126**	
			05/95 →	– SPOILER –		116 **623**		
			05/95 →	8		119 **848**	119 **848**	
Brava			09/95 → 10/01			116 **141**	116 **126**	
			09/95 → 10/01	8		119 **855**	119 **848**	
Bravo			09/95 → 10/01			116 **141**	116 **126**	115 **713**
			09/95 → 10/01	8		119 **855**	119 **848**	115 **713**
			03/07 → 12/14	6	119 **298**			116 **530**
Cinquecento			06/92 →		116 **218**	116 **126**	116 **126**	
			06/92 →	– SPOILER –		116 **623**		
			06/92 →	8		119 **848**	119 **848**	
Citivan			1988 →		116 **226**	116 **109**	116 **109**	
Coupe			11/93 →		116 **310**	116 **134**	116 **126**	116 **112**
			11/93 →	– SPOILER –	116 **311**	116 **607**		
			11/93 →	8		119 **853**	119 **848**	116 **112**
Croma	1		10/85 → 12/90		116 **220**	116 **112**	116 **112**	116 **109**
			10/85 → 12/90	– SPOILER –		116 **604**		
			10/85 → 12/90	8		119 **850**	119 **850**	116 **109**
			01/91 →		116 **220**	116 **112**	116 **112**	
			01/91 →	– SPOILER –		116 **604**		
			01/91 →	8		119 **850**	119 **850**	
	2		10/05 → 01/11	1	119 **371**			115 **715**
Doblo			03/01 → 09/05			116 **166**	116 **109**	115 **715**
			03/01 → 09/05	8		119 **855**	119 **845**	115 **715**
			10/05 → 12/09			116 **166**	116 **109**	
			10/05 → 12/09	8		119 **855**	119 **845**	
			01/10 →	6	119 **378**			10 119 **530**
Ducato			1982 → 01/94		116 **220**	116 **112**	116 **112**	
			1982 → 01/94	– SPOILER –		116 **604**		
			1982 → 01/94	8		119 **850**	119 **850**	
			02/94 → 06/06		116 **222**	116 **166**	116 **166**	
			02/94 → 06/06	– SPOILER –		116 **606**		
			02/94 → 06/06	8		119 **855**	119 **855**	
			07/06 →	6	119 **416**			
Duna		x1	08/91 → 2000			116 **126**		
			08/91 → 2000	8		119 **845**		
Elba		x1	06/91 → 1997			116 **126**		
			06/91 → 1997	8		119 **845**		
Fiorino	850T / 900T Pulmino		1968 → 1973			116 **120**	116 **120**	

4

Flat Blade OE connections

❶ = ❷ = ❸ = ❹ =

❺ = ❻ = ❼ = ❽ =

OE Flachwischer Verbindungssysteme

For/Für			2	– SPOILER – / – HBLADE –	1+1	1	2	
FIAT (...)								
Fiorino		x1	1988 → 09/00			116 126		
			1988 → 09/00	8		119 845		
			02/08 →	3	119 408			115 715
Freemont			06/11 →			116 148	116 126	
			06/11 →	8	119 762	119 860	119 848	
Fullback			05/16 →			116 166	116 109	
			05/16 →	– SPOILER –		116 606		
			05/16 →	8		119 855	119 845	
			05/16 →			116 166	116 109	
			05/16 →	– SPOILER –		116 606		
			05/16 →	8		119 855	119 845	
Grande Punto	3		11/05 →	2	119 412			116 520
			11/05 →	2	119 413			116 520
Idea			01/04 → 12/05			116 166	116 121	115 715
			01/04 → 12/05	8		119 855	119 838	115 715
			01/06 → 03/08	8		119 855	119 835	115 715
			04/08 → 01/12	6	119 289			
Linea			07/07 → 10/15	2	119 412			
			07/07 → 10/15	2	119 413			
Marea			09/96 →			116 141	116 126	
			09/96 →	8		119 855	119 848	
		Week-End	09/96 →			116 141	116 126	115 714
			09/96 →	8		119 855	119 848	115 714
Multipla			01/99 → 04/06			116 148	116 166	115 715
			01/99 → 04/06	8		119 860	119 855	115 715
			05/06 → 06/10	2	119 372			115 715
Palio			10/97 →			116 166	116 109	
			10/97 →	8		119 855	119 845	
		Week-End	10/97 →			116 166	116 109	115 713
			10/97 →	8		119 855	119 845	115 713
Panda	1	x1	07/80 → 12/92			116 122		
	2		09/03 → 12/11			116 166	116 121	
			09/03 → 12/11	8		119 855	119 840	
	3		03/12 →	6	119 262			116 530
		4X4 / Trekking	10/12 →	6	119 262			116 530
Premio		x1	1987 → 2000			116 126		
			1987 → 2000	8		119 845		
Punto	1	3 5	03/93 → 09/99			116 141	116 121	115 713
			03/93 → 09/99	8		119 855	119 840	115 713
			03/94 →			116 141	116 121	
			03/94 →	8		119 855	119 840	
	2	3 5	10/99 → 10/09			116 166	116 109	115 715
			10/99 → 10/09	8	119 725	119 853	119 845	115 715
			11/05 →	2	119 412			116 520
	Evo / Abarth		10/09 →	2	119 412			116 520
			10/09 →	2	119 413			116 520
Scudo	1		10/95 → 12/06			116 137	116 112	
			10/95 → 12/06	8		119 865	119 850	
	2		01/07 → 06/16			116 137	116 112	116 540
			01/07 → 06/16	8		119 865	119 850	116 540
			01/07 → 06/16			116 137	116 112	10 116 518
			01/07 → 06/16	8		119 865	119 850	10 116 518
Sedici			04/06 →			116 137	116 119	10 116 518
			04/06 →	8		119 865	119 835	10 116 518
Seicento			03/98 → 08/05		116 218	116 126	116 126	
			03/98 → 08/05	– SPOILER –		116 623		
			03/98 → 08/05	8		119 848	119 848	
Siena			01/01 → 2012			116 166	116 109	
			01/01 → 2012	8		119 855	119 845	
Spider Europa						116 119	116 119	
Stilo		3 5	11/01 → 05/06			116 166	116 192	115 715
			11/01 → 05/06	– SPOILER –		116 606		
			11/01 → 05/06	8	119 725	119 853	119 845	115 715
			06/06 → 06/07	2	119 367			115 715
		MultiWagon	01/03 → 05/06			116 166	116 109	116 540
			01/03 → 05/06	8	119 725	119 853	119 845	116 540
			06/06 → 06/07	2	119 367			116 540

4

Flat Blade OE connections

❶ = ❷ = ❸ = ❹ =

OE Flachwischer Verbindungssysteme

❺ = ❻ = ❼ = ❽ =

For/Für			2	– SPOILER – – HBLADE –				
FIAT (...)								
Strada			05/00 →			116 **141**	116 **109**	
			05/00 →	8		119 **855**	119 **845**	
Talento			09/91 → 09/95		116 **220**	116 **112**	116 **112**	
			09/91 → 09/95	8		119 **850**	119 **850**	
			06/16 →	6	119 **431**			
			06/16 →	6	119 **431**			116 **550**
Tipo			10/88 → 02/93		116 **218**	116 **126**	116 **126**	116 **121**
			10/88 → 02/93	– SPOILER –		116 **623**		
			10/88 → 02/93	8		119 **848**	119 **848**	116 **121**
			11/15 →	6	119 **265**			
			05/16 →	6	119 **265**			
			09/16 →	6	119 **265**			
Ulysse			06/94 → 05/02			116 **137**	116 **112**	116 **121**
			06/94 → 05/02	8		119 **865**	119 **850**	116 **121**
			06/94 → 05/02			116 **137**	116 **112**	116 **121**
			06/94 → 05/02	8		119 **865**	119 **850**	116 **121**
			06/02 → 08/05	– SPOILER –	116 **352**			116 **540**
Uno		x1	01/83 → 07/92			116 **126**		
			01/83 → 07/92	8		119 **845**		
			07/92 →			116 **126**		115 **713**
			07/92 →	8		119 **845**		
X 1/9			03/69 → 12/86			116 **120**	116 **120**	
FORD								
B-Max			09/12 →	2	119 **448**			116 **520**
Capri			01/69 → 12/87			116 **122**	116 **122**	116 **125**
C-Max			10/10 →	2	119 **444**			116 **520**
Consul			01/72 → 12/80		116 **226**	116 **109**	116 **109**	
Cortina			→ 08/80			116 **122**	116 **122**	
			09/80 → 1982			116 **125**	116 **125**	
Cougar			10/98 → 08/01			116 **166**	116 **126**	116 **166**
			10/98 → 08/01	– SPOILER –		116 **606**		
			10/98 → 08/01	8		119 **855**	119 **850**	116 **166**
Ecosport			04/14 → 10/16		NEW 119 **467**			
			04/14 →			116 **166**	116 **121**	
			04/14 →	8		119 **855**	119 **840**	
Edge			06/16 →	2	119 **439**			119 **511**
Escort	1 / 2		01/68 → 07/80			116 **122**	116 **122**	
		Van	01/68 → 06/80			116 **122**	116 **122**	
	2		12/74 → 07/80			116 **119**	116 **119**	
	3		08/80 → 07/86		116 **226**	116 **109**	116 **109**	116 **112**
			08/80 → 07/86	– SPOILER –		116 **602**		
			08/80 → 07/86	8		119 **845**	119 **845**	116 **112**
			08/80 → 07/86		116 **226**	116 **109**	116 **109**	
			08/80 → 07/86	– SPOILER –		116 **602**		
			08/80 → 07/86	8		119 **845**	119 **845**	
	3 / 4	Van	07/80 → 08/90		116 **226**	116 **109**	116 **109**	
			07/80 → 08/90	– SPOILER –		116 **602**		
			07/80 → 08/90	8		119 **845**	119 **845**	
	4		08/86 → 08/90		116 **226**	116 **109**	116 **109**	116 **109**
			08/86 → 08/90	– SPOILER –		116 **602**		
			08/86 → 08/90	8		119 **845**	119 **845**	116 **109**
		Clipper	08/86 → 08/90		116 **226**	116 **109**	116 **109**	116 **109**
			08/86 → 08/90	– SPOILER –		116 **602**		
			08/86 → 08/90	8		119 **845**	119 **845**	116 **109**
	5 / 6 / 7	3 5	09/90 → 08/00		116 **220**	116 **112**	116 **112**	116 **112**
			09/90 → 08/00	– SPOILER –		116 **604**		
			09/90 → 08/00	8		119 **850**	119 **850**	116 **112**
			09/90 → 01/99		116 **220**	116 **112**	116 **112**	
			09/90 → 01/99	– SPOILER –		116 **604**		
			09/90 → 01/99	8		119 **850**	119 **850**	
		Clipper	09/90 → 08/00		116 **220**	116 **112**	116 **112**	116 **120**
			09/90 → 08/00	– SPOILER –		116 **604**		
			09/90 → 08/00	8		119 **850**	119 **850**	116 **120**
		Van	09/90 → 12/03		116 **220**	116 **112**	116 **112**	
			09/90 → 12/03	– SPOILER –		116 **604**		
			09/90 → 12/03	8		119 **850**	119 **850**	

4

Flat Blade OE connections

❶ = ❷ = ❸ = ❹ =

❺ = ❻ = ❼ = ❽ =

OE Flachwischer Verbindungssysteme

For/Für			2	– SPOILER – – HBLADE –				
FORD (...)								
Explorer			01/91 → 12/96		116 **226**	116 **109**	116 **109**	116 **122**
			01/91 → 12/96	8		119 **845**	119 **845**	116 **122**
			01/97 → 12/01		116 **226**	116 **109**	116 **109**	116 **119**
			01/97 → 12/01	8		119 **845**	119 **845**	116 **119**
			2001 →	8		119 **855**	119 **855**	
Fiesta	1		06/76 → 12/83			116 **122**	116 **122**	116 **120**
	2		09/83 → 12/89			116 **122**	116 **122**	116 **122**
			09/83 → 11/89			116 **121**	116 **121**	116 **120**
			09/83 → 11/89	– SPOILER –		116 **601**		
	3		03/89 → 09/95		116 **218**	116 **126**	116 **126**	116 **121**
			03/89 → 09/95	– SPOILER –		116 **623**		
			03/89 → 09/95	8		119 **848**	119 **848**	116 **121**
	3/ 4	Van	03/89 → 12/97			116 **126**	116 **126**	
			03/89 → 12/97	– SPOILER –		116 **623**		
			03/89 → 12/97	8		119 **848**	119 **848**	
	4		10/95 → 04/02		116 **218**	116 **126**	116 **126**	NEW 116 **548**
			10/95 → 04/02	– SPOILER –		116 **623**		
			10/95 → 04/02	8	119 **710**	119 **848**	119 **848**	NEW 116 **548**
		Van	01/98 → 04/02			116 **126**	116 **126**	
			01/98 → 04/02	– SPOILER –		116 **623**		
			01/98 → 04/02	8		119 **848**	119 **848**	
	5		05/02 → 10/08			116 **166**	116 **121**	116 **116**
			05/02 → 10/08	– SPOILER –		116 **606**		
			05/02 → 10/08	8	119 **744**	119 **855**	119 **840**	116 **116**
	6		10/08 → 08/10	6	119 **428**			116 **516**
			09/10 →	6	119 **429**			
	Classic		10/95 → 04/02		116 **218**	116 **126**	116 **126**	116 **121**
			10/95 → 04/02	– SPOILER –		116 **623**		
			10/95 → 04/02	8		119 **848**	119 **848**	116 **121**
	Courrier		07/91 → 12/02		116 **218**	116 **126**	116 **126**	
			07/91 → 12/02	– SPOILER –		116 **623**		
			07/91 → 12/02	8		119 **848**	119 **848**	
Focus	1	C-Max 3 5	10/98 → 09/04			116 **166**	116 **126**	116 **119**
			10/98 → 09/04	– SPOILER –		116 **606**		
			10/98 → 09/04	8	119 **740**	119 **855**	119 **848**	116 **119**
		C-Max 4	10/98 → 02/05			116 **166**	116 **126**	
			10/98 → 02/05	– SPOILER –		116 **606**		
			10/98 → 02/05	8	119 **740**	119 **855**	119 **848**	
		C-Max	10/98 → 02/05			116 **166**	116 **126**	116 **116**
			10/98 → 02/05	– SPOILER –		116 **606**		
			10/98 → 02/05	8	119 **740**	119 **855**	119 **848**	116 **116**
	2	C-Max 3 5	10/04 → 08/05	1	119 **394**			NEW 116 **547**
		C-Max 3	09/05 → 02/11	1	119 **394**			116 **546**
		C-Max 4	03/05 → 03/11	1	119 **394**			
		C-Max 5	09/05 → 02/11	1	119 **394**			116 **546**
		C-Max	03/05 → 10/08	1	119 **394**			
			11/08 → 03/11	1	119 **394**			116 **516**
			09/06 → 03/11	1	119 **394**			
	3	4	04/11 →	6	119 **445**			
		5	03/11 →	6	119 **445**			116 **516**
			04/11 →	6	119 **445**			116 **516**
			09/03 → 09/10	1	119 **384**			
Fusion			10/02 → 02/12			116 **166**	116 **126**	116 **116**
			10/02 → 02/12	– SPOILER –		116 **606**		
			10/02 → 02/12	8	119 **744**	119 **855**	119 **840**	116 **116**
Galaxy	1		08/95 → 12/01		116 **336**			116 **121**
			06/01 → 04/06	1	119 **383**			
	2		06/06 → 12/08	6	119 **452**			116 **121**
			01/09 → 11/15	6	119 **452**			116 **546**
	3		12/15 →	2	119 **335**			119 **513**
			12/15 →	2	119 **335**			119 **513**
Granada		3 5	01/72 → 12/85		116 **226**	116 **109**	116 **109**	
			01/72 → 12/85	– SPOILER –		116 **602**		
		3 5	01/72 → 12/85			116 **125**	116 **125**	
		3 5	01/74 → 08/85		116 **226**	116 **109**	116 **109**	
		3 5	09/85 → 01/95		116 **220**	116 **112**	116 **112**	
			09/85 → 01/95	– SPOILER –		116 **604**		

4

Flat Blade OE connections

❶ = ❷ = ❸ = ❹ =

OE Flachwischer Verbindungssysteme

❺ = ❻ = ❼ = ❽ =

For/Für			2	– SPOILER – HBLADE				
▶ FORD (...)								
Granada			01/75 → 12/85		116 226	116 109	116 109	
			01/75 → 12/85			116 125	116 125	
			09/75 → 08/85		116 226	116 109	116 109	116 120
Grand C-Max			10/10 →	❷	119 444			NEW 116 518
Ka	1		10/96 → 10/08			116 126	116 121	116 121
			10/96 → 10/08	– SPOILER –		116 623		
			10/96 → 10/08	❽		119 848	119 840	116 121
	StreetKa		01/03 → 12/05		116 218	116 126	116 126	
			01/03 → 12/05	❽		119 848	119 845	
	2		11/10 →	❻	119 290			116 530
Kuga	1		06/08 → 12/12	❻	119 378			
	2		01/13 →	❷	119 439			119 523
Maverick			1993 → 05/01		116 220	116 134	116 112	
			1993 → 05/01	– SPOILER –	116 313	116 607		
			1993 → 05/01	❽		119 853	119 850	
			06/01 → 12/06		116 218	116 126	116 126	
			06/01 → 12/06	– SPOILER –		116 623		
			06/01 → 12/06	❽		119 848	119 848	
Mercury			01/94 →		116 222	116 166	116 166	
Mondeo	1		01/93 → 09/96	– SPOILER –	116 313	116 607	116 112	116 166
			01/93 → 09/96	❽	119 726	119 853	119 850	116 166
		4	10/96 → 12/00	– SPOILER –	116 313	116 607	116 112	
			10/96 → 12/00	❽	119 726	119 853	119 850	
		5	10/96 → 12/00	– SPOILER –	116 313	116 607	116 112	116 166
			10/96 → 12/00	❽	119 726	119 853	119 850	116 166
		Clipper	01/93 → 12/00	– SPOILER –	116 313	116 607	116 112	
			01/93 → 12/00	❽	119 726	119 853	119 850	
	2	4	01/01 → 05/07			116 166	116 112	
			01/01 → 05/07	– SPOILER –		116 606		
			01/01 → 05/07	❽	119 742	119 855	119 850	
		5	01/01 → 05/07	– SPOILER –		116 606	116 112	116 126
			01/01 → 05/07	❽	119 742	119 855	119 850	116 126
		Clipper	01/01 → 05/07	– SPOILER –		116 606	116 112	116 116
			01/01 → 05/07	❽	119 742	119 855	119 850	116 116
	3	4	06/07 → 11/14	❻	119 418			
		5	06/07 → 11/14	❻	119 418			119 509
		SW	06/07 → 11/14	❻	119 418			116 516
	4		12/14 →	❷	119 336			
		SW	12/14 →	❷	119 336			119 523
Mustang			01/04 → 12/12	❽		119 855	119 850	
Orion	1		09/83 → 08/90		116 226	116 109	116 109	
			09/83 → 08/90	– SPOILER –		116 602		
			09/83 → 08/90	❽		119 845	119 845	
	2		09/90 → 01/94		116 220	116 112	116 112	
			09/90 → 01/94	– SPOILER –		116 604		
			09/90 → 01/94	❽		119 850	119 850	
P100			01/82 → 12/87		116 226	116 109	116 109	
			01/82 → 12/87	– SPOILER –		116 602		
			01/82 → 12/87	❽		119 845	119 845	
			01/88 → 12/93		116 220	116 112	116 112	
			01/88 → 12/93	– SPOILER –		116 604		
			01/88 → 12/93	❽		119 850	119 850	
Probe			01/88 → 12/93			116 129	116 129	
			01/94 → 09/98		116 220	116 112	116 112	116 112
			01/94 → 09/98	– SPOILER –		116 604		
Puma			03/97 → 09/02		116 218	116 126	116 126	116 126
			03/97 → 09/02	– SPOILER –		116 623		
			03/97 → 09/02	❽		119 848	119 848	116 126
Ranger		Pick Up	01/97 → 12/11		116 226	116 109	116 109	
			01/97 → 12/11	– SPOILER –		116 602		
			01/97 → 12/11	❽		119 845	119 845	
		~~Pick-up~~	09/01 → 12/11		116 222	116 166	116 166	
			09/01 → 12/11	❽		119 855	119 855	
Ranger / Wildtrak			03/12 → 01/16			116 148	116 121	
			03/12 → 01/16	❽		119 860	119 840	
			02/16 →	❻	119 378			
Scorpio			03/85 → 09/98		116 220	116 112	116 112	116 112

Flat Blade OE connections

❶ = ❷ = ❸ = ❹ =

OE Flachwischer Verbindungssysteme

❺ = ❻ = ❼ = ❽ =

For/Für			2	– SPOILER – / – HBLADE –				
FORD (...)								
Scorpio			03/85 → 09/98	– SPOILER –		116 **604**	116 **112**	116 **112**
			03/85 → 09/98	8		119 **850**	119 **850**	116 **112**
			02/92 → 09/98		116 **220**	116 **112**	116 **112**	
			02/92 → 09/98	– SPOILER –		116 **604**		
			02/92 → 09/98	8		119 **850**	119 **850**	
Sierra			08/82 → 02/93		116 **220**	116 **112**	116 **112**	116 **112**
			08/82 → 02/93	– SPOILER –		116 **604**		
			08/82 → 02/93	8		119 **850**	119 **850**	116 **112**
			08/82 → 02/93		116 **220**	116 **112**	116 **112**	
			08/82 → 02/93	– SPOILER –		116 **604**		
			08/82 → 02/93	8		119 **850**	119 **850**	
S-Max	1		05/06 → 08/15	6	119 **452**			
	2		09/15 →	2	119 **335**			119 **513**
			09/15 →	2	119 **335**			119 **513**
Taunus			02/76 → 08/79			116 **120**	116 **120**	
			09/79 → 08/82		116 **226**	116 **109**	116 **109**	
			09/79 → 08/82	– SPOILER –		116 **602**		
			09/79 → 08/82	8		119 **845**	119 **845**	
			02/76 → 08/79			116 **120**	116 **120**	
			09/79 → 08/82		116 **226**	116 **109**	116 **109**	116 **119**
			09/79 → 08/82	– SPOILER –		116 **602**		
			09/79 → 08/82	8		119 **845**	119 **845**	116 **119**
Tourneo			10/94 → 12/12		116 **222**	116 **166**	116 **166**	
			10/94 → 12/12	– SPOILER –		116 **606**		
			10/94 → 12/12	8		119 **855**	119 **855**	
	Connect		01/03 → 03/04			116 **166**	116 **112**	116 **119**
			01/03 → 03/04	8		119 **855**	119 **850**	116 **119**
			04/04 → 11/13			116 **166**	116 **112**	116 **121**
			04/04 → 11/13	8		119 **855**	119 **850**	116 **121**
			12/13 →	2	119 **335**			116 **540**
			12/13 →	2	119 **335**			
	Courier		06/14 →	2	119 **459**			116 **540**
	Custom		12/12 →	6	119 **452**			
Transit	2		06/78 → 10/85	– SPOILER –		116 **604**	116 **112**	
			06/78 → 10/85	8		119 **850**	119 **850**	
	3 / 4 / 5		11/85 → 10/00		116 **222**	116 **166**	116 **166**	
			11/85 → 10/00	– SPOILER –		116 **606**		
			11/85 → 10/00	8		119 **855**	119 **855**	
	2000		11/00 → 08/09			116 **140**	116 **148**	
			11/00 → 08/09	8		119 **865**	119 **860**	
			09/09 → 04/14			116 **137**	116 **166**	
			09/09 → 04/14	8		119 **865**	119 **853**	
	Compact		09/96 → 10/00		116 **222**	116 **166**	116 **166**	
			09/96 → 10/00	– SPOILER –		116 **606**		
			09/96 → 10/00	8		119 **855**	119 **855**	
	Connect		12/13 →	2	119 **335**			116 **540**
			12/13 →	2	119 **335**			
	Courier		06/14 →	2	119 **459**			116 **540**
			06/14 →	2	119 **459**			
	Custom / Kombi		12/12 →	6	119 **443**			116 **121**
			12/12 →	6	119 **443**			116 **119**
	Custom		12/12 →	6	119 **443**			
	Van 2T		05/14 →	6	119 **460**			
Windstar			03/96 → 2003	8		119 **860**	119 **850**	116 **121**
FSO								
ATU			01/96 →		116 **220**	116 **112**	116 **112**	
			01/96 →	8		119 **850**	119 **850**	
Caro			1992 →		116 **220**	116 **112**	116 **112**	116 **112**
			1992 →	8		119 **850**	119 **850**	116 **112**
Polonez FSO	X Special		1980 →			116 **120**	116 **119**	
	6V		1985 →			116 **119**	116 **119**	116 **120**
Truck			1993 → 1994			116 **121**	116 **121**	
GAZ								
2308	Ataman		01/73 →		116 **220**	116 **112**	116 **112**	
2410			01/73 →		116 **220**	116 **112**	116 **112**	
3102			01/83 →		116 **220**	116 **112**	116 **112**	

4

Flat Blade OE connections

❶ = ❷ = ❸ = ❹ =

OE Flachwischer Verbindungssysteme

❺ = ❻ = ❼ = ❽ =

For/Für				– SPOILER – – HBLADE –				
GAZ (...)								
3102	Volga		01/83 →		116 **220**	116 **112**	116 **112**	
31022	Volga		01/73 →		116 **220**	116 **112**	116 **112**	
31023	Volga		01/83 →		116 **220**	116 **112**	116 **112**	
31029			01/73 →		116 **220**	116 **112**	116 **112**	
3105			01/92 →		116 **220**	116 **112**	116 **112**	
3110	Volga		01/83 →		116 **220**	116 **112**	116 **112**	
3111	Volga		01/83 →		116 **220**	116 **112**	116 **112**	
3302			01/93 →		116 **220**	116 **112**	116 **112**	
			01/93 →	– SPOILER –		116 **604**		
GMC								
Denali / Denali XL			01/07 → 12/07	❷	119 **253**		119 **850**	
Yukon / Yukon XL			01/07 → 12/07	❷	119 **253**		119 **850**	
HONDA								
Accord	1		05/76 → 09/83			116 **124**	116 **124**	
	2		10/83 → 09/85			116 **109**	116 **124**	
			10/83 → 09/85	– SPOILER –		116 **602**		
	3		10/85 → 09/89		116 **226**	116 **109**	116 **109**	
			10/85 → 09/89	– SPOILER –		116 **602**		
			10/85 → 09/89	❽		119 **845**	119 **850**	
			10/85 → 09/89		116 **226**	116 **109**	116 **109**	
	4		10/89 → 06/92			116 **166**	116 **126**	
			10/89 → 06/92	❽		119 **855**	119 **850**	
			10/89 → 08/93			116 **166**	116 **126**	
			10/89 → 08/93	❽		119 **855**	119 **850**	
		Aerodeck	10/89 → 08/93			116 **166**	116 **126**	116 **119**
		Aerodeck	10/89 → 08/93	❽		119 **855**	119 **850**	116 **119**
	5 / 6	4	07/92 → 09/98			116 **166**	116 **112**	
		4	07/92 → 09/98	– SPOILER –		116 **606**		
		4	07/92 → 09/98	❽		119 **855**	119 **850**	
	7	4	10/98 → 12/02			116 **166**	116 **126**	
		4	10/98 → 12/02	– SPOILER –		116 **606**		
		4	10/98 → 12/02	❽		119 **855**	119 **850**	
	8	4	01/03 → 02/06	❽		119 **865**	119 **850**	
		4	04/06 → 05/08			116 **137**	116 **120**	
		5	11/99 → 03/06			116 **166**	116 **126**	116 **550**
		5	11/99 → 03/06	– SPOILER –		116 **606**		
		5	11/99 → 03/06	❽		119 **855**	119 **850**	116 **550**
		Tourer	04/03 → 03/06	❽		119 **865**	119 **850**	116 **515**
		Tourer	04/06 → 05/08			116 **137**	116 **120**	116 **515**
	9	4	06/08 → 12/15			116 **148**	116 **166**	
		4	06/08 → 12/15	❽		119 **860**	119 **850**	
		Tourer	06/08 → 12/15			116 **148**	116 **166**	116 **515**
		Tourer	06/08 → 12/15	❽		119 **860**	119 **850**	116 **515**
Balade			1982 → 1986			116 **120**	116 **120**	
City			11/82 → 10/86			116 **124**	116 **124**	
Civic	1		1972 → 08/79			116 **120**	116 **120**	
	2		09/79 → 08/83			116 **122**	116 **122**	
	3		09/83 → 08/87		116 **226**	116 **109**	116 **109**	
			09/83 → 08/87	– SPOILER –		116 **602**		
		Shuttle	09/83 → 08/87		116 **226**	116 **109**	116 **109**	116 **121**
		Shuttle	09/83 → 08/87	❽		119 **845**	119 **850**	116 **121**
	4		09/87 → 08/91		116 **226**	116 **126**	116 **109**	
			09/87 → 08/91	– SPOILER –		116 **623**		
			09/87 → 08/91	❽		119 **848**	119 **850**	
		Shuttle	09/87 → 08/91		116 **218**	116 **126**	116 **126**	116 **121**
		Shuttle	09/87 → 08/91	❽		119 **848**	119 **850**	116 **121**
	4 / 5		09/91 → 12/94		116 **307**	116 **112**	116 **109**	
			09/91 → 12/94	❽		119 **850**	119 **850**	
	6	3	01/95 → 08/01		116 **307**	116 **112**	116 **109**	116 **119**
		3	01/95 → 08/01	❽		119 **850**	119 **850**	116 **119**
		4	01/95 → 03/01		116 **307**	116 **112**	116 **109**	
		4	01/95 → 03/01	❽		119 **850**	119 **850**	
		5	01/95 → 03/01		116 **307**	116 **112**	116 **109**	116 **109**
		5	01/95 → 03/01	❽		119 **850**	119 **850**	116 **109**
			01/95 → 08/01		116 **307**	116 **112**	116 **109**	
		Aerodeck	03/98 → 03/01		116 **307**	116 **112**	116 **109**	116 **119**

4

Flat Blade OE connections

❶ = ❷ = ❸ = ❹ =

OE Flachwischer Verbindungssysteme

❺ = ❻ = ❼ = ❽ =

For/Für				– SPOILER – – HBLADE –				
HONDA (...)								
Civic	6	Aerodeck	03/98 → 03/01	– SPOILER –		116 **604**	116 **109**	116 **119**
			03/98 → 03/01	8		119 **850**	119 **850**	116 **119**
	7		09/01 → 12/06	8		119 **860**	119 **850**	116 **520**
			04/01 → 12/05	– SPOILER –		116 **612**	116 **121**	116 **520**
			04/01 → 12/05	8		119 **860**	119 **850**	116 **520**
	8	Hybrid	03/08 → 06/16			116 **137**	116 **166**	
			03/08 → 06/16	8		119 **865**	119 **850**	
	9		02/12 → 02/17	– HBLADE – 8		116 **185**	116 **176**	
			02/12 → 02/17	8		119 **865**	119 **850**	
		Tourer	01/14 →	– HBLADE – 8		116 **185**	116 **176**	116 **515**
			01/14 →	8		119 **865**	119 **850**	116 **515**
			01/14 →	8		119 **865**	119 **850**	116 **515**
Concerto			09/88 → 06/97		116 **226**	116 **109**	116 **109**	116 **109**
			09/88 → 06/97	– SPOILER –		116 **602**		
			09/88 → 06/97	8		119 **845**	119 **850**	116 **109**
CR-V			03/97 → 03/02		116 **218**	116 **126**	116 **126**	
			03/97 → 03/02	8		119 **848**	119 **850**	
			04/02 → 12/06		116 **220**	116 **134**	116 **112**	
			04/02 → 12/06	8		119 **853**	119 **850**	
			01/07 → 09/12			116 **137**	116 **122**	116 **531**
			01/07 → 09/12	8	119 **780**	119 **865**	119 **850**	116 **531**
			10/12 →	8	119 **780**	119 **865**		
CRX			09/91 → 12/99		116 **307**	116 **112**	116 **109**	
			09/91 → 12/99	8		119 **850**	119 **850**	
CR-Z			05/10 → 12/14	– HBLADE – 8		116 **185**	116 **178**	
			05/10 → 12/14	8		119 **865**	119 **850**	
FR-V			12/04 → 12/10			116 **137**	116 **126**	
			12/04 → 12/10	8		119 **865**	119 **850**	
HR-V			03/99 → 12/03			116 **112**	116 **121**	
			03/99 → 12/03	– SPOILER –		116 **604**		
			03/99 → 12/03	8		119 **850**	119 **850**	
			01/00 → 11/05			116 **112**	116 **121**	
			01/00 → 11/05	– SPOILER –		116 **604**		
			01/00 → 11/05	8		119 **850**	119 **850**	
			09/15 →			116 **137**	116 **109**	
			09/15 →	8		119 **865**	119 **850**	
			09/15 →			116 **137**	116 **109**	
			09/15 →	8		119 **865**	119 **850**	
Insight	1		1999 → 2008		116 **307**	116 **112**	116 **109**	116 **121**
			1999 → 2008	– SPOILER –		116 **604**		
			1999 → 2008	8		119 **850**	119 **850**	116 **121**
	2		04/09 → 12/14			116 **137**	116 **121**	
			04/09 → 12/14	8		119 **865**	119 **850**	
Integra			03/85 → 02/90		116 **226**	116 **109**	116 **109**	116 **109**
			03/85 → 02/90	– SPOILER –		116 **602**		
			03/85 → 02/90	8		119 **845**	119 **850**	116 **109**
	Type R		09/97 → 09/01		116 **307**	116 **112**	116 **109**	116 **126**
			09/97 → 09/01	– SPOILER –		116 **604**		
			09/97 → 09/01	8		119 **850**	119 **850**	116 **126**
Jazz	1		10/81 → 12/86			116 **122**	116 **122**	
	2		01/02 → 10/08			116 **112**	116 **119**	
			01/02 → 10/08	8		119 **850**	119 **850**	
	3		11/08 → 09/15			116 **137**	116 **119**	116 **531**
			11/08 → 09/15	– HBLADE – 8		116 **185**	116 **172**	116 **531**
			11/08 → 09/15	8		119 **865**	119 **850**	116 **531**
	4		10/15 →	8	119 **865**	119 **865**	119 **850**	116 **531**
			10/15 →	8	119 **865**	119 **865**	119 **850**	116 **531**
Legend			09/87 → 08/90		116 **226**	116 **109**	116 **109**	
			09/87 → 08/90	8		119 **845**	119 **850**	
			09/87 → 08/90		116 **226**	116 **109**	116 **109**	
			09/87 → 08/90	8		119 **845**	119 **850**	
Logo			03/99 → 12/01			116 **112**	116 **121**	
			03/99 → 12/01	– SPOILER –		116 **604**		
			03/99 → 12/01	8		119 **850**	119 **850**	
NSX			03/89 → 04/05		116 **220**	116 **112**	116 **112**	
Prelude			08/79 → 10/82			116 **124**	116 **124**	
			11/82 → 03/87			116 **125**	116 **125**	

4

Flat Blade OE connections

❶ = ❷ = ❸ = ❹ =

❺ = ❻ = ❼ = ❽ =

OE Flachwischer Verbindungssysteme

For/Für				– SPOILER – – HBLADE –				
HONDA (...)								
Prelude			04/87 → 09/91		116 226	116 126	116 109	116 121
			04/87 → 09/91	– SPOILER –		116 623		
			04/87 → 09/91	8		119 848	119 850	116 121
			10/91 → 12/96		116 218	116 112	116 126	
			10/91 → 12/96	– SPOILER –	116 335	116 604		
			10/91 → 12/96	8		119 850	119 850	
			01/97 → 09/01		116 307	116 112	116 109	
			01/97 → 09/01	– SPOILER –		116 604		
			01/97 → 09/01	8		119 850	119 850	
Quintet			01/80 → 1984			116 124	116 124	
S 2000			12/99 → 10/09			116 121	116 112	
			12/99 → 10/09	– SPOILER –		116 604		
			12/99 → 10/09	8		119 840	119 850	
Shuttle			1995 → 2004		116 222	116 166	116 166	116 119
			1995 → 2004	8		119 855	119 850	116 119
Stream			06/01 → 09/05	8		119 860	119 850	
TV Acty			1979 → 1988			116 119	116 119	
HUMMER								
H2			2004 →	8		119 840	119 850	
H3			01/06 →	8		119 840	119 850	
H3-T			2006 →	8		119 840	119 850	
HYUNDAI								
Accent		3 5	07/94 → 11/99		116 307	116 112	116 109	116 112
			07/94 → 11/99	8		119 850	119 850	116 112
			12/99 → 12/06		116 307	116 112	116 109	116 109
			12/99 → 12/06	8		119 850	119 850	116 109
		4	07/94 → 11/99		116 307	116 112	116 109	
			07/94 → 11/99	8		119 850	119 850	
			07/94 → 11/99		116 307	116 112	116 109	116 112
			07/94 → 11/99	8		119 850	119 850	116 112
Atos			09/97 → 03/08			116 112	116 121	116 119
			09/97 → 03/08	8		119 850	119 850	116 119
Coupe		GSI	1990 → 03/96		116 226	116 126	116 109	
			1990 → 03/96	– SPOILER –		116 623		
			1990 → 03/96	8		119 848	119 850	
			09/96 → 10/10			116 166	116 109	116 112
			09/96 → 10/10	8		119 855	119 850	116 112
Elantra		4	11/00 → 12/06		116 307	116 112	116 109	
			11/00 → 12/06	8		119 850	119 850	
		5	11/00 → 12/06		116 307	116 112	116 109	116 112
			11/00 → 12/06	8		119 850	119 850	116 112
Excel			01/86 → 10/89		116 226	116 109	116 109	
Galloper			03/98 → 03/02			116 121	116 121	
			03/98 → 03/02	8		119 840	119 850	
Genesis Coupé			10/10 →			116 148	116 112	
Getz			10/02 → 12/08			116 166	116 119	116 119
			10/02 → 12/08	8		119 855	119 850	116 119
Grandeur			05/06 → 11/09			116 148	116 112	
			05/06 → 11/09	8		119 860	119 850	
Grand Santa Fe			09/13 →			116 137	116 119	
			09/13 →	– HBLADE – 8		116 185	116 172	
			09/13 →	8		119 865	119 850	
			09/13 →			116 137	116 119	
			09/13 →	8		119 865	119 850	
H100			07/93 → 2007		116 226	116 109	116 109	116 122
			07/93 → 2007	8		119 845	119 850	116 122
H300			12/07 →			116 148	116 112	
			12/07 →	8		119 860	119 850	
i 10			04/08 →			116 166	116 121	
			04/08 →	8		119 855	119 850	
i 20			01/09 → 10/14			116 148	116 122	116 513
		5	11/14 →	– HBLADE – 8		116 183	116 174	116 520
			11/14 →	8	119 760	119 860	119 850	116 520
			11/14 →	8		119 860	119 850	116 520
		3	04/15 →	– HBLADE – 8		116 183	116 174	116 520
			04/15 →	8	119 760	119 860	119 850	116 520

4

Flat Blade OE connections

❶ = ❷ = ❸ = ❹ =

OE Flachwischer Verbindungssysteme

❺ = ❻ = ❼ = ❽ =

For/Für			2	– SPOILER – / – HBLADE –				
HYUNDAI (...)								
i 20			04/15 →			119 **860**	119 **850**	116 **520**
	Active		10/15 →	– HBLADE –		116 **183**	116 **174**	116 **520**
			10/15 →		119 **760**	119 **860**	119 **850**	116 **520**
			10/15 →			119 **860**	119 **850**	116 **520**
i 30			06/07 → 2011		119 **298**		119 **850**	
			09/10 → 02/12			116 **148**	116 **109**	
			09/10 → 02/12			119 **860**	119 **850**	
			12/12 →			116 **137**	116 **119**	
			12/12 →			119 **865**	119 **850**	
			12/12 →			116 **137**	116 **119**	
			12/12 →			119 **865**	119 **850**	
			03/12 →			116 **137**	116 **119**	
			03/12 →	– HBLADE –		116 **185**	116 **172**	
			03/12 →			119 **865**	119 **850**	
			03/12 →			116 **137**	116 **119**	
			03/12 →			119 **865**	119 **850**	
		CW	12/07 → 2011		119 **298**		119 **850**	
		CW	09/10 → 06/12			116 **148**	116 **109**	
			09/10 → 06/12			119 **860**	119 **850**	
		CW	07/12 →			116 **137**	116 **119**	
			07/12 →	– HBLADE –		116 **185**	116 **172**	
			07/12 →			119 **865**	119 **850**	
			07/12 →			116 **137**	116 **119**	
			07/12 →			119 **865**	119 **850**	
i 40			02/12 →			119 **865**	119 **850**	
			02/12 →			119 **865**	119 **850**	
		CW	06/11 →			119 **865**	119 **850**	116 **532**
			06/11 →			119 **865**	119 **850**	116 **532**
Ioniq			10/16 →			119 **865**	119 **850**	
			10/16 →			119 **865**	119 **850**	
ix 20			10/10 →		119 **278**		119 **850**	116 **520**
ix 35			04/10 →			119 **860**	119 **850**	
Lantra	1		12/90 → 05/95		116 **218**	116 **112**	116 **126**	
			12/90 → 05/95			119 **850**	119 **850**	
	2		06/95 → 10/00		116 **307**	116 **112**	116 **109**	
			06/95 → 10/00			119 **850**	119 **850**	
			09/95 → 10/00		116 **307**	116 **112**	116 **109**	116 **119**
			09/95 → 10/00			119 **850**	119 **850**	116 **119**
Matrix			10/01 → 10/10			116 **166**	116 **121**	116 **119**
			10/01 → 10/10			119 **855**	119 **850**	116 **119**
Pony			1982 → 09/89			116 **122**	116 **122**	
			10/89 → 06/94		116 **226**	116 **109**	116 **109**	116 **121**
			10/89 → 06/94	– SPOILER –		116 **602**		
			10/89 → 06/94			119 **845**	119 **850**	116 **121**
			07/94 → 01/00		116 **307**	116 **112**	116 **109**	116 **112**
			07/94 → 01/00			119 **850**	119 **850**	116 **112**
			07/94 → 01/00		116 **307**	116 **112**	116 **109**	
			07/94 → 01/00			119 **850**	119 **850**	
			10/89 → 06/94		116 **226**	116 **109**	116 **109**	116 **121**
			10/89 → 06/94	– SPOILER –		116 **602**		
			10/89 → 06/94			119 **845**	119 **850**	116 **121**
Santa Fe	1		10/00 → 03/06			116 **166**	116 **112**	
			10/00 → 03/06	– SPOILER –		116 **606**		
			10/00 → 03/06			119 **855**	119 **850**	
	2		04/06 → 08/12			116 **148**	116 **109**	116 **532**
			04/06 → 08/12		119 **761**	119 **860**	119 **850**	116 **532**
	3		09/12 →			116 **137**	116 **119**	
			09/12 →	– HBLADE –		116 **185**	116 **172**	
			09/12 →			119 **865**	119 **850**	
			09/12 →			116 **137**	116 **119**	
			09/12 →			119 **865**	119 **850**	
Satellite			03/98 → 11/07			116 **137**	116 **112**	116 **121**
			03/98 → 11/07			119 **865**	119 **850**	116 **121**
	H1		12/07 →			116 **148**	116 **112**	116 **532**
Scoupe			03/90 → 12/95		116 **226**	116 **126**	116 **109**	
			03/90 → 12/95	– SPOILER –		116 **623**		
			03/90 → 12/95			119 **848**	119 **850**	

4

Flat Blade OE connections

❶ = ❷ = ❸ = ❹ =

❺ = ❻ = ❼ = ❽ =

OE Flachwischer Verbindungssysteme

For/Für				– SPOILER – – HBLADE –				
HYUNDAI (...)								
Sonata	1		11/88 → 08/93		116 **307**	116 **112**	116 **109**	
			11/88 → 08/93	8		119 **850**	119 **850**	
	2		09/93 → 08/98		116 **220**	116 **112**	116 **112**	
			09/93 → 08/98	– SPOILER –		116 **604**		
			09/93 → 08/98	8		119 **850**	119 **850**	
	3		09/98 → 08/04			116 **166**	116 **112**	
			09/98 → 08/04	8		119 **855**	119 **850**	
	4		03/05 → 2011			116 **148**	116 **112**	
			03/05 → 2011	8		119 **860**	119 **850**	
Starex	H1		09/97 → 11/07			116 **137**	116 **112**	116 **122**
			09/97 → 11/07	8		119 **865**	119 **850**	116 **122**
Stellar			12/83 → 1992			116 **122**	116 **122**	
Terracan			12/01 → 2007			116 **166**	116 **112**	116 **121**
			12/01 → 2007	8		119 **855**	119 **850**	116 **121**
Trajet			04/00 → 2008			116 **137**	116 **166**	116 **121**
			04/00 → 2008	8		119 **865**	119 **850**	116 **121**
Tucson			08/04 → 04/09	8		119 **860**	119 **850**	
			09/15 →			116 **137**	116 **121**	116 **532**
			09/15 →	– HBLADE – 8		116 **185**	116 **174**	116 **532**
			09/15 →	8	119 **780**		119 **850**	116 **532**
			09/15 →			116 **137**	116 **121**	116 **532**
Veloster			05/11 →	– HBLADE – 8		116 **185**	116 **176**	
XG			08/99 → 12/05			116 **166**	116 **112**	
			08/99 → 12/05	8		119 **855**	119 **850**	
INFINITI								
M 30 / 35h			01/11 →	8		119 **865**	119 **850**	
Q 30		5	09/15 →	2	119 **284**			
Q 50		4	06/13 →	8	119 **780**	119 **865**	119 **850**	
Q 60			10/13 →	8	119 **780**	119 **865**	119 **850**	
			07/16 →	8	119 **780**	119 **865**	119 **850**	
			07/16 →	8		119 **865**	119 **850**	
QX 30		5	06/16 →	2	119 **284**			
INNOCENTI								
A40S						116 **119**	116 **119**	
Elba		x1	1992 → 1997			116 **109**		
			1992 → 1997	8		119 **845**		
Mini	500		1987 →			116 **119**	116 **119**	
	650		1984 →			116 **119**	116 **119**	
	900		1986 →		116 **226**	116 **109**	116 **109**	
			1986 →	8		119 **845**	119 **850**	
	De Tomaso		1974 →			116 **119**	116 **119**	
Regent			1974 →			116 **119**	116 **119**	
ISUZU								
Amigo			09/91 →		116 **218**	116 **126**	116 **126**	116 **119**
			09/91 →	8		119 **848**	119 **850**	116 **119**
Bellet			1972 → 1974			116 **119**	116 **119**	
Campo			1990 →		116 **226**	116 **109**	116 **109**	
			1990 →	– SPOILER –		116 **602**		
			1990 →	8		119 **845**	119 **850**	
D-Max / Rodeo			05/04 → 05/12			116 **166**	116 **126**	
			05/04 → 05/12	8		119 **855**	119 **850**	
			06/12 →			116 **166**	116 **109**	
			06/12 →	8		119 **855**	119 **850**	
Florian			→ 1984			116 **122**	116 **122**	
Gemini			11/84 →		116 **226**	116 **125**	116 **125**	116 **125**
TFR54			1990 →		116 **226**	116 **109**	116 **109**	
			1990 →	8		119 **845**	119 **850**	
Trooper			02/81 → 12/86			116 **121**	116 **121**	
			1992 → 1999		116 **220**	116 **112**	116 **112**	116 **121**
			1999 →		116 **220**	116 **112**		
			1999 →	8		119 **850**	119 **850**	
	Magic		1989 →			116 **121**	116 **121**	116 **120**
			1989 →	8		119 **840**	119 **850**	116 **120**
WFR			1982 →			116 **121**	116 **121**	116 **121**
IVECO								

4

Flat Blade OE connections

❶ = ❷ = ❸ = ❹ =

❺ = ❻ = ❼ = ❽ =

OE Flachwischer Verbindungssysteme

For/Für			2	– SPOILER – – HBLADE –				
IVECO (...)								
Daily / Daily City			06/99 → 05/14		116 **341**			
Daily			06/14 →	❷	119 **311**		119 **850**	
JAGUAR								
F-Pace			05/16 →	❻	119 **431**		119 **850**	
F-Type			06/13 →	❽	119 **743**	119 **855**	119 **850**	
			06/13 →	❽		119 **855**	119 **850**	
			01/14 →	❽	119 **743**	119 **855**	119 **850**	
			01/14 →	❽		119 **855**	119 **850**	
Sovereign			1970 → 12/85			116 **122**	116 **122**	
			1986 →		116 **220**	116 **112**	116 **112**	
S-Type			02/99 → 09/01		116 **222**	116 **166**	116 **166**	
XF / XFR			03/08 → 09/15	❷	119 **376**		119 **850**	
XF Sportbrake			01/13 → 09/15	❷	119 **376**		119 **850**	
XJ Series			1969 → 12/79			116 **120**	116 **120**	
			1979 → 12/93			116 **122**	116 **122**	
	XJ12		1994 → 2002		116 **220**	116 **112**	116 **112**	
	XJS		1975 →			116 **122**	116 **122**	
	XJ6		1986 →		116 **220**	116 **112**	116 **112**	
	XJ6 / XJ8 / XJR	x1	06/95 → 03/03			116 **134**		
	XJ / XJR		05/10 →	❷	119 **254**		119 **850**	
XK Series	XK / XKR		03/06 → 09/14	❽		119 **855**	119 **850**	
	XK		03/06 → 09/14	❽		119 **855**	119 **850**	
X-Type			06/01 →			116 **166**	116 **109**	
			06/01 →	– SPOILER –		116 **606**		
		Estate	03/04 →			116 **166**	116 **109**	
			03/04 →	– SPOILER –		116 **606**		
JEEP								
Cherokee			04/97 → 09/01	❽		119 **845**	119 **850**	
			10/01 → 02/08			116 **129**	116 **129**	116 **112**
			10/01 → 02/08	❽		119 **848**	119 **850**	116 **112**
			03/08 → 12/12		116 **218**	116 **126**	116 **126**	
			03/08 → 12/12	❽		119 **848**	119 **850**	
			05/14 →			116 **137**	116 **109**	116 **532**
			05/14 →	– HBLADE – ❽		116 **185**	116 **176**	116 **532**
			05/14 →	❽		119 **865**	119 **850**	116 **532**
			05/14 →			116 **137**	116 **109**	116 **532**
			05/14 →	❽		119 **865**	119 **850**	116 **532**
Commander			04/06 → 12/09		116 **226**	116 **109**	116 **109**	
			04/06 → 12/09	– SPOILER –		116 **602**		
			04/06 → 12/09	❽		119 **845**	119 **850**	
Compass			11/06 →			116 **166**	116 **112**	
			11/06 →	– SPOILER –		116 **606**		
			11/06 →	❽		119 **855**	119 **850**	
Grand Cherokee			01/93 → 03/99	❽		119 **850**	119 **850**	
			04/99 → 05/05	– SPOILER –	116 **314**	116 **607**	116 **134**	116 **112**
			04/99 → 05/05	❽		119 **853**	119 **850**	116 **112**
			06/05 → 08/11		116 **222**	116 **134**	116 **134**	
			06/05 → 08/11	– SPOILER –	116 **314**	116 **607**		
			06/05 → 08/11	❽		119 **853**	119 **850**	
			09/11 → 08/13			116 **166**	116 **134**	
			09/11 → 08/13	❽		119 **855**	119 **850**	
			09/13 →			116 **166**	116 **134**	
			09/13 →	– HBLADE – ❽		116 **180**	116 **179**	
			09/13 →	❽		119 **855**	119 **850**	
			09/13 →			116 **166**	116 **134**	
			09/13 →	❽		119 **855**	119 **850**	
Patriot			09/07 → 12/12		116 **222**	116 **134**	116 **134**	
			09/07 → 12/12	❽		119 **853**	119 **850**	
Renegade			10/14 →	❻	119 **349**		119 **850**	
Wrangler			→ 03/07			116 **119**	116 **119**	116 **109**
			→ 03/07	❽		119 **835**	119 **850**	116 **109**
		Unlimited	04/07 →			116 **120**	116 **120**	116 **520**
			04/07 →	❽		119 **838**	119 **850**	116 **520**
KIA								
Besta			10/95 →		116 **226**	116 **109**	116 **109**	

4

Flat Blade OE connections

❶ = ❷ = ❸ = ❹ =

❺ = ❻ = ❼ = ❽ =

OE Flachwischer Verbindungssysteme

For/Für				– SPOILER – / – HBLADE –				
KIA (...)								
Besta			10/95 →	– SPOILER –	116 **301**	116 **602**	116 **109**	
			10/95 →	8		119 **845**	119 **850**	
Carens			12/01 → 04/05			116 **148**	116 **126**	
			12/01 → 04/05	8		119 **860**	119 **850**	
			04/05 → 08/06	8		119 **860**		
			09/06 → 01/11			116 **137**	116 **121**	
			09/06 → 01/11	8		119 **865**	119 **850**	
			04/13 →	8		119 **865**		
Carnival			03/98 → 05/06			116 **148**	116 **148**	116 **109**
			03/98 → 05/06	8		119 **860**	119 **850**	116 **109**
			06/06 → 01/11			116 **137**	116 **109**	
			06/06 → 01/11	8		119 **865**	119 **850**	
Cee'd / Pro Cee'd		3 5	12/06 → 09/09	6	119 **298**			
		3 5	10/09 → 04/12			116 **148**	116 **109**	
			10/09 → 04/12	– HBLADE – 8		116 **183**	116 **176**	
			10/09 → 04/12	8	119 **761**	119 **860**	119 **845**	
		3 5	05/12 →	– HBLADE – 8		116 **185**	116 **172**	
			05/12 →	8		119 **865**	119 **835**	
			05/12 →	8		119 **865**	119 **835**	
Cee'd		SW	09/07 → 09/09	6	119 **298**			
		SW	10/09 → 08/12			116 **137**	116 **109**	
			10/09 → 08/12	– HBLADE – 8		116 **183**	116 **176**	
			10/09 → 08/12	8	119 **761**	119 **860**	119 **845**	
		SW	09/12 →	– HBLADE – 8		116 **185**	116 **172**	
			09/12 →	8		119 **865**	119 **835**	
			09/12 →	8		119 **865**	119 **835**	
Cerato			07/04 → 06/07			116 **148**	116 **121**	
			07/04 → 06/07	8		119 **860**	119 **850**	
Clarus			10/95 → 03/01			116 **134**	116 **126**	
			10/95 → 03/01	8		119 **853**	119 **850**	
			03/98 → 03/01			116 **134**	116 **126**	
			03/98 → 03/01	8		119 **853**	119 **850**	
Frontier			1995 →		116 **220**	116 **112**	116 **112**	
			1995 →	8		119 **850**	119 **850**	
Joice			1999 → 2003			116 **166**	116 **109**	116 **121**
			1999 → 2003	8		119 **855**	119 **850**	116 **121**
Magentis			10/01 → 09/05			116 **166**	116 **109**	
			10/01 → 09/05	– SPOILER –		116 **606**		
			10/01 → 09/05	8		119 **855**	119 **850**	
			10/05 → 01/12			116 **148**	116 **109**	
			10/05 → 01/12	8		119 **860**	119 **850**	
Niro			07/16 →	8		119 **865**	119 **850**	
			07/16 →	8		119 **865**	119 **850**	
Opirus / Amanti			10/03 → 02/10			116 **148**	116 **109**	
			10/03 → 02/10	8		119 **860**	119 **850**	
Optima			02/12 →	– HBLADE – 8		116 **183**	116 **176**	
Optima / Optima GT			02/16 →			116 **137**	116 **125**	
			02/16 →	– HBLADE – 8		116 **185**	116 **176**	
			02/16 →	8		119 **865**	119 **850**	
			02/16 →			116 **137**	116 **125**	
			02/16 →	8		119 **865**	119 **850**	
Picanto			04/04 → 05/11			116 **166**	116 **121**	
			04/04 → 05/11	– SPOILER –		116 **606**		
			04/04 → 05/11	8		119 **855**	119 **850**	
			05/11 →			116 **166**	116 **121**	
			05/11 →	8		119 **855**	119 **850**	
Preggio			09/97 → 2004			116 **134**	116 **109**	116 **109**
			09/97 → 2004	8		119 **853**	119 **850**	116 **109**
Pride / Festiva			01/95 → 06/01		116 **226**	116 **109**	116 **109**	116 **120**
			01/95 → 06/01	8		119 **845**	119 **850**	116 **120**
Pro Cee'd /-GT		3	04/13 →	8		119 **865**	119 **835**	
Rio			10/00 → 03/05			116 **134**	116 **109**	116 **119**
			10/00 → 03/05	– SPOILER –		116 **607**		
			10/00 → 03/05	8		119 **853**	119 **850**	116 **119**
		4	04/05 → 06/11			116 **166**	116 **121**	
			04/05 → 06/11	8	119 **744**	119 **855**	119 **850**	
		5	04/05 → 06/11			116 **166**	116 **121**	116 **532**

4

Flat Blade OE connections

❶ = ❷ = ❸ = ❹ =

OE Flachwischer Verbindungssysteme

❺ = ❻ = ❼ = ❽ =

For/Für			2	– SPOILER – – HBLADE –				
KIA (...)								
Rio		5	04/05 → 06/11	8	119 744	119 855	119 850	116 532
		5 5	07/11 → 01/17	– HBLADE – 8		116 185	116 174	116 513
			07/11 → 01/17	8		119 865	119 850	116 513
Sephia / Leo / Mentor		4	11/93 → 12/00		116 310	116 134	116 126	
			11/93 → 12/00	– SPOILER –	116 311	116 607		
			11/93 → 12/00	8		119 853	119 850	
		5	11/93 → 12/00		116 310	116 134	116 126	116 109
			11/93 → 12/00	– SPOILER –	116 311	116 607		
			11/93 → 12/00	8		119 853	119 850	116 109
Shuma			03/98 → 03/04		116 310	116 134	116 126	116 126
			03/98 → 03/04	8		119 853	119 850	116 126
Sorento	1		08/02 → 09/09			116 148	116 109	116 119
			08/02 → 09/09	8		119 860	119 850	116 119
	2		10/09 → 03/15			116 148	116 112	
			10/09 → 03/15	– HBLADE – 8		116 183	116 178	
			10/09 → 03/15	8		119 860	119 850	
			10/09 → 03/15			116 148	116 112	
			10/09 → 03/15	8		119 860	119 850	
	3		04/15 →			116 137	116 121	
			04/15 →	– HBLADE – 8		116 185	116 174	
			04/15 →	8	119 780	119 865	119 850	
			04/15 →			116 137	116 121	
			04/15 →	8		119 865	119 850	
Soul			02/09 →			116 148	116 112	
			02/09 →	8		119 860	119 850	
Sportage			02/94 → 07/02		116 220	116 112	116 112	116 121
			02/94 → 07/02	– SPOILER –		116 604		
			02/94 → 07/02	8		119 850	119 850	116 121
			10/04 → 08/10			116 148	116 121	
			10/04 → 08/10	8		119 860	119 850	
			09/10 → 12/15	– HBLADE – 8		116 183	116 176	
			09/10 → 12/15	8	119 761	119 860	119 850	
			01/16 →			116 137	116 121	
			01/16 →	– HBLADE – 8		116 185	116 174	
			01/16 →			116 137	116 121	
Venga			01/10 →	6	119 278		119 850	116 520
LADA								
110			01/97 →		116 220	116 112	116 112	
			01/97 →	8		119 850	119 850	
111			01/98 →		116 220	116 112	116 112	
			01/98 →	8		119 850	119 850	
112			10/00 →		116 220	116 112	116 112	
			10/00 →	– SPOILER –		116 604		
			10/00 →	8		119 850	119 850	
1200...1600 / Riva			1970 → 1988			116 119	116 119	
1500			06/88 →			116 119	116 119	
2101 / 2102			01/70 → 08/81			116 119	116 119	
2103			09/72 → 08/84			116 119	116 119	
2104, 21043, 21044			01/86 →			116 119	116 119	
2105			1981 →			116 119	116 119	
2106 / 2107			09/72 →			116 119	116 119	
21011			08/74 → 08/84			116 119	116 119	
21051 / 21053 / 2102 / 21073			01/81 →			116 119	116 119	
Corda					116 220	116 112	116 112	
Kalina	1117		10/05 →	8		119 860	119 850	
	1118		10/05 →	8		119 860	119 850	
	1119		10/05 →	8		119 860	119 850	
Niva			1978 →			116 119	116 119	
Oka	1111		09/89 →		116 220	116 112	116 112	
Tavria			1990 → 09/92		116 220	116 112	116 112	
			1990 → 09/92	– SPOILER –		116 604		
			1990 → 09/92	8		119 850	119 850	
		x1	10/92 →			116 112		
			10/92 →	8		119 850		
Toscana			01/86 →			116 119	116 119	
LANCIA								

Flat Blade OE connections

❶ = ❷ = ❸ = ❹ =

❺ = ❻ = ❼ = ❽ =

OE Flachwischer Verbindungssysteme

For/Für				– SPOILER – / – HBLADE –				
LANCIA (...)								
Beta			01/72 → 07/78		116 **226**	116 **109**	116 **109**	
			08/78 →			116 **125**	116 **125**	
			01/72 → 07/78		116 **226**	116 **109**	116 **109**	
			08/78 →			116 **125**	116 **125**	
Dedra			03/89 → 02/96		116 **310**	116 **134**	116 **126**	
			03/89 → 02/96	– SPOILER –	116 **311**	116 **607**		
			03/89 → 02/96	❽		119 **853**	119 **850**	
		Station Wagon	09/94 → 02/96		116 **310**	116 **134**	116 **126**	115 **714**
			09/94 → 02/96	– SPOILER –	116 **311**	116 **607**		
			09/94 → 02/96	❽		119 **853**	119 **850**	115 **714**
Delta			09/79 → 04/86			116 **125**	116 **125**	116 **125**
			07/86 → 02/93		116 **226**	116 **109**	116 **109**	116 **109**
			03/93 → 02/96		116 **310**	116 **134**	116 **126**	116 **112**
			03/93 → 02/96	– SPOILER –	116 **311**	116 **607**		
			03/93 → 02/96	❽		119 **853**	119 **850**	116 **112**
		HPE ~~HF/2.0Ltr~~	03/96 → 04/00			116 **134**	116 **126**	
			03/96 → 04/00	– SPOILER –	116 **311**	116 **607**		
		HPE HF / 2.0 Ltr	03/96 → 04/00			116 **134**	116 **126**	
			03/96 → 04/00	❽		119 **853**	119 **850**	
		HPE	01/95 → 02/96			116 **134**	116 **126**	
			01/95 → 02/96	❽		119 **853**	119 **850**	
			07/08 →	❻	119 **298**		119 **850**	116 **530**
Flavia			01/70 → 12/76			116 **120**	116 **120**	
			01/70 → 12/76			116 **119**	116 **119**	
			10/11 →	❽		119 **860**	119 **850**	
			10/12 →	❽		119 **860**	119 **850**	
Fulvia			01/69 → 12/76			116 **119**	116 **119**	
			01/69 → 12/76			116 **120**	116 **120**	
Gamma			09/75 → 12/85		116 **226**	116 **109**	116 **109**	
Musa			09/04 → 12/05	❽		119 **855**	119 **850**	
			01/06 → 10/07	❽		119 **855**	119 **850**	
			11/07 →	❻	119 **289**		119 **850**	115 **715**
Phedra			06/02 → 08/05	– SPOILER –	116 **352**			116 **540**
Prisma			01/83 → 04/89		116 **226**	116 **109**	116 **109**	
Thema			10/88 → 09/94		116 **220**	116 **112**	116 **112**	
			10/88 → 09/94	– SPOILER –		116 **604**		
			10/88 → 09/94	❽		119 **850**	119 **850**	
			10/88 → 09/94		116 **220**	116 **112**	116 **112**	116 **120**
			10/88 → 09/94	– SPOILER –		116 **604**		
			10/88 → 09/94	❽		119 **850**	119 **850**	116 **120**
			10/11 →	– HBLADE – ❽		116 **183**	116 **179**	
			10/11 →	❽		119 **860**	119 **850**	
Trevi			04/80 →		116 **226**	116 **109**	116 **109**	
			04/80 →	– SPOILER –		116 **602**		
Voyager			10/11 →			116 **137**	116 **112**	
			10/11 →	❽		119 **865**	119 **850**	
Y10		x1	01/85 → 08/92			116 **126**		116 **119**
			01/85 → 08/92	❽		119 **845**		
			09/92 → 12/95			116 **109**		115 **713**
Y	Ipsilon		01/96 → 02/03			116 **141**	116 **121**	
			01/96 → 02/03	❽		119 **855**	119 **850**	
Ypsilon			03/03 → 12/12			116 **148**	116 **121**	115 **715**
			06/11 →	❻	119 **262**		119 **850**	
Zeta			10/94 → 04/98			116 **137**	116 **112**	116 **121**
			10/94 → 04/98	❽		119 **865**	119 **850**	116 **121**
			05/98 → 04/02	❽		119 **865**		
			10/94 → 04/02	❽		119 **865**	119 **850**	
LAND ROVER								
Discovery	1		09/89 → 06/93		116 **226**	116 **109**	116 **109**	
			09/89 → 06/93	– SPOILER –		116 **602**		
			09/89 → 06/93	❽		119 **845**	119 **850**	
	2		07/93 → 11/98		116 **226**	116 **109**	116 **109**	
			07/93 → 11/98	– SPOILER –		116 **602**		
			07/93 → 11/98	❽		119 **845**	119 **850**	
			12/98 → 09/04			116 **133**	116 **133**	
	3 / 4		10/04 →	❽	119 **293**	119 **855**	119 **850**	

4

Flat Blade OE connections

❶ = ❷ = ❸ = ❹ =

❺ = ❻ = ❼ = ❽ =

OE Flachwischer Verbindungssysteme

For/Für				– SPOILER – – HBLADE –				
LAND ROVER (...)								
Discovery	3 / 4		10/04 →	8		119 **855**	119 **850**	
	Sport		03/15 →			116 **137**	116 **112**	116 **513**
			03/15 →	– HBLADE – 8		116 **185**	116 **178**	116 **513**
			03/15 →	8		119 **865**	119 **850**	116 **513**
			03/15 →			116 **137**	116 **112**	116 **513**
			03/15 →	8		119 **865**	119 **850**	116 **513**
Evoque		3 5	09/11 →	6	119 **256**		119 **850**	116 **117**
			02/16 →	6	119 **256**		119 **850**	
Freelander	1		09/97 → 11/06			116 **166**	116 **134**	
			09/97 → 11/06	– SPOILER –		116 **606**		
			09/97 → 11/06	8		119 **855**	119 **850**	
	2		12/06 →	2	119 **294**		119 **850**	
Land Rover	90 / 110		1968 → 09/83			116 **116**	116 **116**	
			10/83 → 1990			116 **119**	116 **119**	
Range Rover			01/77 → 12/89			116 **125**	116 **125**	116 **125**
			01/89 → 09/94		116 **226**	116 **109**	116 **109**	116 **109**
			01/89 → 09/94	– SPOILER –		116 **602**		
			01/89 → 09/94	8		119 **845**	119 **850**	116 **109**
			10/94 → 02/02		116 **222**	116 **166**	116 **166**	
			10/94 → 02/02	– SPOILER –		116 **606**		
			10/94 → 02/02	8		119 **855**	119 **850**	
			03/02 → 11/12			116 **131**	116 **131**	
			12/12 → 09/15			116 **148**	116 **112**	
			12/12 → 09/15	– HBLADE – 8		116 **183**	116 **178**	
			12/12 → 09/15	8	119 **746**		119 **850**	
			12/12 →			116 **148**	116 **112**	
			12/12 →	8	119 **746**		119 **850**	
			10/15 → 11/16			116 **148**	116 **112**	
			10/15 → 11/16	– HBLADE – 8		116 **183**	116 **178**	
			10/15 → 11/16	8	119 **746**	119 **860**	119 **850**	
			10/15 → 11/16			116 **148**	116 **112**	
			10/15 → 11/16	8		119 **860**	119 **850**	
	Evoque		09/11 →	6	119 **256**		119 **850**	116 **117**
	Sport		05/05 → 08/13	8	119 **293**	119 **855**	119 **850**	
			05/05 → 08/13	8		119 **855**	119 **850**	
	Sport 2		09/13 → 09/15			116 **148**	116 **112**	
			09/13 → 09/15	– HBLADE – 8		116 **183**	116 **178**	
			09/13 → 09/15	8	119 **746**		119 **850**	
			09/13 →			116 **148**	116 **112**	
			10/15 → 11/16			116 **148**	116 **112**	
			10/15 → 11/16	– HBLADE – 8		116 **183**	116 **178**	
			10/15 → 11/16	8	119 **746**	119 **860**	119 **850**	
			10/15 → 11/16			116 **148**	116 **112**	
			10/15 → 11/16	8		119 **860**	119 **850**	
LDV (LEYLAND DAF)								
Convoy			01/96 →		116 **220**	116 **112**	116 **112**	
			01/96 →	8		119 **850**	119 **850**	
LEXUS								
GS	450h		06/12 →	– HBLADE – 8		116 **185**	116 **176**	
			06/12 →	8		119 **865**	119 **845**	
			06/12 →	8		119 **865**	119 **845**	
IS	220d / 250		11/05 → 05/13	8		119 **855**	119 **850**	
	250C		06/09 → 05/13	8		119 **855**	119 **850**	
		4	06/13 →			116 **148**	116 **109**	
			06/13 →	– HBLADE – 8		116 **183**	116 **176**	
			06/13 →	8		119 **860**	119 **845**	
			06/13 →			116 **148**	116 **109**	
			06/13 →	8		119 **860**	119 **845**	
LS	400		10/90 → 09/03			116 **166**	116 **121**	
	460 /.../ 600H		12/06 →	– HBLADE – 8		116 **183**	116 **174**	
RX	350 / 450H		06/09 → 12/15	– HBLADE – 8		116 **185**	116 **180**	
			06/09 → 12/15	8		119 **865**	119 **855**	
LIGIER								
JS 50 / JS 50L / JS RC		x1	02/13 →	8		119 **848**		
Optima		3 5 x1		8		119 **848**		

Flat Blade OE connections

❶ = ❷ = ❸ = ❹ =

❺ = ❻ = ❼ = ❽ =

OE Flachwischer Verbindungssysteme

For/Für			2	– SPOILER – / – HBLADE –				
LIGIER (...)								
Optimax		x1		8		119 848		
X-TOO 2 / Max		x1		8		119 860		
MAHINDRA								
Bolero			2006 →	8		119 840	119 840	
Goa			2006 →	8		119 850	119 850	
MASERATI								
222			1993 →		116 220	116 112	116 112	
			1993 →	– SPOILER –		116 604		
430			1993 →		116 220	116 112	116 112	
			1993 →	– SPOILER –		116 604		
Ghibli					116 220	116 112	116 112	
				– SPOILER –		116 604		
Shamal	2.24		1991 →		116 220	116 112	116 112	
			1991 →	– SPOILER –		116 604		
Spyder	4.24		1991 →		116 220	116 112	116 112	
			1991 →	– SPOILER –		116 604		
MAZDA								
121	(DA)		10/88 → 02/91		116 226	116 109	116 109	116 120
			10/88 → 02/91	– SPOILER –		116 602		
			10/88 → 02/91	8		119 845	119 845	116 120
	(DB)	L / LX / Canvas	03/91 → 02/96			116 112	116 121	
			03/91 → 02/96	– SPOILER –		116 604		
			03/91 → 02/96	8		119 850	119 840	
	(JA / JB)		03/96 →		116 218	116 126	116 126	
			03/96 →	– SPOILER –		116 623		
			03/96 →	8		119 848	119 848	
323	(FA)		1977 → 1981			116 120	116 120	
	(BD)		1981 → 1985			116 121	116 121	
			1981 → 1985			116 124	116 124	
	(BV)		1978 → 1985			116 120	116 120	
			1978 → 1985			116 122	116 122	
	(BF)		1986 → 1990		116 226	116 109	116 109	116 109
			1986 → 1990	– SPOILER –		116 602		
			1986 → 1990	8		119 845	119 845	116 109
			1986 → 1990		116 226	116 109	116 109	116 119
			1986 → 1990	8		119 845	119 845	116 119
	(BG)	3	1990 → 09/94			116 134	116 109	
			1990 → 09/94	8		119 853	119 845	
		5	1990 → 09/94			116 134	116 109	116 112
			1990 → 09/94	– SPOILER –		116 607		
			1990 → 09/94	8		119 853	119 845	116 112
			1990 → 09/94		116 226	116 109	116 109	116 119
			1990 → 09/94	– SPOILER –		116 602		
			1990 → 09/94	8		119 845	119 845	116 119
			1990 → 09/94			116 134	116 109	116 121
			1990 → 09/94	8		119 853	119 845	116 121
	(BA)	Coupe / Sportiva / Sporty 3	10/94 → 08/98			116 134	116 109	116 112
			10/94 → 08/98	– SPOILER –		116 607		
			10/94 → 08/98	8		119 853	119 845	116 112
		Familia 4	10/94 → 08/98			116 134	116 109	
			10/94 → 08/98	– SPOILER –		116 607		
			10/94 → 08/98	8		119 853	119 845	
		F / Astina 5	10/94 → 08/98			116 134	116 126	116 126
			10/94 → 08/98	8		119 853	119 848	116 126
		Station Wagon	10/94 → 08/98		116 226	116 109	116 109	116 119
			10/94 → 08/98	8		119 845	119 845	116 119
	(BJ)	3	02/97 → 12/03		116 310	116 134	116 126	116 121
			02/97 → 12/03	8		119 853	119 848	116 121
		4	09/98 → 12/03		116 310	116 134	116 126	
			09/98 → 12/03	8		119 853	119 848	
		5	09/98 → 12/03		116 310	116 134	116 126	116 119
			09/98 → 12/03	8		119 853	119 845	116 119
626			1970 → 1978			116 120	116 120	
			1979 → 1985			116 125	116 125	
			1986 → 09/88		116 226	116 109	116 109	

4

Flat Blade OE connections

❶ = ❷ = ❸ = ❹ =

OE Flachwischer Verbindungssysteme

❺ = ❻ = ❼ = ❽ =

For/Für				– SPOILER – – HBLADE –				
MAZDA (...)								
626	(GD)		10/88 → 01/92		116 **218**	116 **126**	116 **126**	
			10/88 → 01/92	– SPOILER –		116 **623**		
			10/88 → 01/92	8		119 **848**	119 **848**	
			10/88 → 01/92		116 **218**	116 **126**	116 **126**	116 **121**
			10/88 → 01/92	– SPOILER –		116 **623**		
			10/88 → 01/92	8		119 **848**	119 **848**	116 **121**
	(GE)	4	02/92 → 06/97		116 **220**	116 **134**	116 **112**	
			02/92 → 06/97	– SPOILER –	116 **313**	116 **607**		
			02/92 → 06/97	8		119 **853**	119 **850**	
		5	02/92 → 06/97		116 **220**	116 **134**	116 **112**	
			02/92 → 06/97	– SPOILER –	116 **313**	116 **607**		
			02/92 → 06/97	8		119 **853**	119 **850**	
			02/92 → 02/98		116 **218**	116 **126**	116 **126**	116 **121**
			02/92 → 02/98	– SPOILER –		116 **623**		
			02/92 → 02/98	8		119 **848**	119 **848**	116 **121**
	(GF)	4	07/97 → 07/02		116 **310**	116 **134**	116 **126**	
			07/97 → 07/02	– SPOILER –	116 **311**	116 **607**		
			07/97 → 07/02	8		119 **853**	119 **848**	
		5	07/97 → 07/02		116 **310**	116 **134**	116 **126**	116 **112**
			07/97 → 07/02	8		119 **853**	119 **848**	116 **112**
	(GW)	Station Wagon	03/98 → 07/02		116 **310**	116 **134**	116 **126**	116 **119**
			03/98 → 07/02	8		119 **853**	119 **848**	116 **119**
818	RX3		1972 → 1979			116 **120**	116 **120**	
929			1976 → 1978			116 **122**	116 **122**	
			1978 → 1987			116 **125**	116 **125**	
			1987 → 12/89		116 **218**	116 **126**	116 **126**	116 **109**
			1987 → 12/89	– SPOILER –		116 **623**		
			1987 → 12/89	8		119 **848**	119 **848**	116 **109**
			1990 →		116 **220**	116 **112**	116 **112**	
			1977 → 1986			116 **121**	116 **121**	
B-Series			01/84 →		116 **226**	116 **109**	116 **109**	
			01/84 →	8		119 **845**	119 **845**	
	B2500		01/96 → 12/06		116 **226**	116 **109**	116 **109**	
			01/96 → 12/06	8		119 **845**	119 **845**	
BT-50			01/07 →		116 **226**	116 **109**	116 **109**	
			01/07 →	8		119 **845**	119 **845**	
CX-3			06/15 →			116 **166**	116 **109**	
			06/15 →	– SPOILER –		116 **606**		
			06/15 →	– HBLADE – 8		116 **180**	116 **176**	
			06/15 →	8		119 **855**	119 **845**	
			06/15 →			116 **166**	116 **109**	
			06/15 →	– SPOILER –		116 **606**		
			06/15 →	8		119 **855**	119 **845**	
CX-5			03/12 →			116 **148**	116 **109**	116 **532**
			03/12 →	– HBLADE – 8		116 **183**	116 **176**	116 **532**
			03/12 →	8	119 **761**	119 **860**	119 **845**	116 **532**
			03/12 →			116 **148**	116 **109**	116 **532**
			03/12 →	8		119 **860**	119 **845**	116 **532**
CX-7			10/07 →	– HBLADE – 8		116 **185**	116 **174**	116 **532**
			10/07 →	8		119 **865**	119 **840**	116 **532**
			10/07 →	8		119 **865**	119 **840**	116 **532**
Capella			1970 → 1978			116 **120**	116 **120**	
			1979 → 1986			116 **125**	116 **125**	
			1986 → 1990		116 **226**	116 **109**	116 **109**	
			1986 → 1990	8		119 **845**	119 **845**	
			1990 → 12/91		116 **218**	116 **126**	116 **126**	
			1990 → 12/91	8		119 **848**	119 **848**	
			01/92 →		116 **220**	116 **134**	116 **112**	116 **112**
			01/92 →	8		119 **853**	119 **850**	116 **112**
			1990 →		116 **218**	116 **126**	116 **126**	116 **166**
			1990 →	8		119 **848**	119 **848**	116 **166**
			09/88 →		116 **218**	116 **126**	116 **126**	116 **121**
			09/88 →	8		119 **848**	119 **848**	116 **121**
Demio			09/98 → 12/00			116 **112**	116 **121**	116 **121**
			09/98 → 12/00	– SPOILER –		116 **604**		
			09/98 → 12/00	8		119 **850**	119 **840**	116 **121**
			01/01 → 04/03			116 **112**	116 **121**	

4

Flat Blade OE connections

❶ = ❷ = ❸ = ❹ =

OE Flachwischer Verbindungssysteme

❺ = ❻ = ❼ = ❽ =

For/Für				– SPOILER – – HBLADE –				
▶ MAZDA (...)								
Demio			01/01 → 04/03	8		119 850	119 840	
E2000 / 2200			01/84 →			116 122	116 121	116 120
Familia			1986 → 1990		116 226	116 109	116 109	116 109
			1986 → 1990	8		119 845	119 845	116 109
			1990 →		116 307	116 112	116 109	116 112
			1990 →	8		119 850	119 845	116 112
			1990 →		116 307	116 112	116 109	116 121
			1990 →	8		119 850	119 845	116 121
			1990 →		116 307	116 112	116 109	
			1990 →	8		119 850	119 845	
Festiva			02/88 → 02/91		116 226	116 109	116 109	
			02/88 → 02/91	8		119 845	119 845	
	L / LX		03/91 →			116 112	116 121	
			03/91 →	8		119 850	119 840	
Luce			1976 → 1978			116 124	116 124	
			1978 → 1987			116 125	116 125	
			1987 → 12/89		116 218	116 126	116 126	116 109
			1987 → 12/89	8		119 848	119 848	116 109
			1990 →		116 220	116 112	116 112	
			1990 →	8		119 850	119 850	
			1977 → 1986			116 121	116 121	
Mazda	2		03/03 → 09/07			116 148	116 121	116 531
			03/03 → 09/07	8		119 860	119 840	116 531
			10/07 → 03/15			116 148	116 119	116 531
			10/07 → 03/15	8		119 860	119 835	116 531
			04/15 →			116 166	116 124	116 531
			04/15 →	– SPOILER –		116 606		
			04/15 →	– HBLADE – 8		116 180	116 174	116 531
			04/15 →			116 166	116 124	116 531
			04/15 →	– SPOILER –		116 606		
	3	4	04/05 → 03/09	1	119 319			
			04/05 → 03/09	1	119 325			
			04/09 → 11/13	8	119 761	119 860	119 845	
			12/13 →			116 148	116 109	
			12/13 →	8		119 860	119 845	
			12/13 →			116 148	116 109	
			12/13 →	– HBLADE – 8		116 183	116 176	
			12/13 →	8	119 761	119 860	119 845	
		5	11/03 → 03/09	1	119 319			116 546
			11/03 → 03/09	1	119 325			116 546
			04/09 → 10/13	8	119 761	119 860	119 845	116 532
			11/13 → 09/14			116 148	116 109	116 513
			11/13 → 09/14	– HBLADE – 8		116 183	116 176	116 513
			11/13 → 09/14	8	119 761	119 860	119 845	116 513
			11/13 →			116 148	116 109	116 513
			11/13 →	8		119 860	119 845	116 513
			10/14 →			116 148	116 109	116 515
			10/14 →	– HBLADE – 8		116 183	116 176	116 515
			10/14 →	8	119 761	119 860	119 845	116 515
	5		07/05 →			116 166	116 112	116 513
			07/05 →	8		119 865	119 840	116 513
	6	5	07/02 → 02/08			116 166	116 109	116 112
			07/02 → 02/08	– SPOILER –		116 606		
			07/02 → 02/08	8		119 855	119 845	116 112
			03/08 → 12/12			116 148	116 121	
			03/08 → 12/12	– HBLADE – 8		116 183	116 174	
			03/08 → 12/12	8		119 860	119 840	
			03/08 → 12/12			116 148	116 121	
			03/08 → 12/12	8		119 860	119 840	
		4	01/13 →			116 148	116 109	
			01/13 →	– HBLADE – 8		116 183	116 176	
			01/13 →	8	119 761	119 860	119 845	
			01/13 →			116 148	116 109	
			01/13 →	8		119 860	119 845	
			07/02 → 02/08			116 166	116 109	116 513
			07/02 → 02/08	– SPOILER –		116 606		
			07/02 → 02/08	8		119 855	119 845	116 513

Flat Blade OE connections

❶ = ❷ = ❸ = ❹ =

❺ = ❻ = ❼ = ❽ =

OE Flachwischer Verbindungssysteme

For/Für			2	– SPOILER – – HBLADE –				
MAZDA (...)								
Mazda	6		03/08 → 12/12			116 **148**	116 **121**	116 **532**
			03/08 → 12/12	– HBLADE –		116 **183**	116 **174**	116 **532**
			03/08 → 12/12			119 **860**	119 **840**	116 **532**
			03/08 → 12/12			116 **148**	116 **121**	116 **532**
			03/08 → 12/12			119 **860**	119 **840**	116 **532**
			01/13 →			116 **148**	116 **109**	116 **513**
			01/13 →	– HBLADE –		116 **183**	116 **176**	116 **513**
			01/13 →		119 **761**	119 **860**	119 **845**	116 **513**
			01/13 →			116 **148**	116 **109**	116 **513**
			01/13 →			119 **860**	119 **845**	116 **513**
MPV			06/96 → 12/99			116 **166**	116 **112**	116 **121**
			06/96 → 12/99			119 **855**	119 **855**	116 **121**
			01/00 → 12/05			116 **148**	116 **148**	116 **121**
			01/00 → 12/05			119 **860**	119 **860**	116 **121**
MX-3			09/91 → 1998			116 **134**	116 **109**	116 **134**
			09/91 → 1998	– SPOILER –		116 **607**		
			09/91 → 1998			119 **853**	119 **845**	116 **134**
MX-5			1990 → 09/15		116 **226**	116 **109**	116 **109**	
			1990 → 09/15	– SPOILER –		116 **602**		
			1990 → 09/15			119 **845**	119 **845**	
			10/15 →		116 **226**	116 **109**	116 **126**	
			10/15 →	– HBLADE –		116 **176**	116 **177**	
			10/15 →			119 **845**	119 **848**	
			10/15 →		116 **226**	116 **109**	116 **126**	
			10/15 →			119 **845**	119 **848**	
MX-6			11/91 →		116 **220**	116 **112**	116 **112**	
			11/91 →	– SPOILER –		116 **604**		
			11/91 →			119 **850**	119 **850**	
Premacy			08/99 →			116 **148**	116 **121**	116 **119**
			08/99 →			119 **860**	119 **840**	116 **119**
RX2			1971 → 1979			116 **122**	116 **122**	
RX3			1972 → 1979			116 **122**	116 **122**	
RX4			1974 → 1982			116 **124**	116 **124**	
RX5			1976 → 1981			116 **122**	116 **124**	
RX7			1978 → 1989			116 **122**	116 **124**	116 **166**
			1990 →		116 **220**	116 **112**	116 **112**	116 **109**
RX8			11/03 →		116 **307**	116 **112**	116 **109**	
			11/03 →	– SPOILER –		116 **604**		
			11/03 →			119 **850**	119 **845**	
Tribute			07/01 → 12/05		116 **218**	116 **112**	116 **126**	
			07/01 → 12/05	– SPOILER –	116 **335**	116 **604**		
			07/01 → 12/05			119 **850**	119 **848**	
Xedos	6		01/93 →		116 **220**	116 **134**	116 **112**	
			01/93 →	– SPOILER –	116 **313**	116 **607**		
			01/93 →			119 **853**	119 **850**	
	9		12/93 →		116 **220**	116 **134**	116 **112**	
			12/93 →	– SPOILER –	116 **313**	116 **607**		
			12/93 →			119 **853**	119 **850**	
MEGA								
e-City		x1	01/08 →			119 **855**		116 **520**
GTO / City		x1	2014 →			119 **855**		
MERCEDES								
190	(201)	x1	10/82 → 12/84			116 **112**		
			01/85 →			116 **135**		
200 / 300	(123)	4	02/76 → 12/85		116 **220**	116 **112**	116 **112**	
			02/76 → 12/85	– SPOILER –		116 **604**		
			02/76 → 12/85			119 **853**	119 **853**	
			02/76 → 12/85		116 **220**	116 **112**	116 **112**	
			02/76 → 12/85	– SPOILER –		116 **604**		
			06/78 → 12/85		116 **220**	116 **112**	116 **112**	116 **121**
			06/78 → 12/85	– SPOILER –		116 **604**		
			06/78 → 12/85			119 **853**	119 **853**	116 **121**
	(124)	4 x1	12/84 → 12/87			116 **135**		
			01/88 → 06/93			116 **148**		
		x1	12/84 → 12/87			116 **135**		
			01/88 → 06/93			116 **148**		

Flat Blade OE connections

❶ = ❷ = ❸ = ❹ =

❺ = OE Flachwischer Verbindungssysteme ❻ = ❼ = ❽ =

For/Für			2	– SPOILER – HBLADE –				
MERCEDES (...)								
200 / 300	(124)	x1	12/84 → 12/87			116 **135**		
			01/88 → 06/93			116 **148**		
A-Class	(168)		09/97 → 08/04	– SPOILER –		116 **618**	116 **619**	116 **119**
			09/97 → 08/04	8	119 **782**	119 **865**	119 **865**	116 **119**
	(169)		09/04 → 08/12	2	119 **395**			116 **520**
	(176)		09/12 → 07/15	2	119 **284**			119 **521**
			08/15 →		NEW 119 **473**			
AMG-GT / GT S / GT R			03/15 →	1	119 **252**			
			03/15 →	1	119 **252**			
B-Class	(245)		05/05 → 10/11	2	119 **395**			116 **520**
	(246)		11/11 → 08/15	2	119 **264**			116 **530**
			09/15 →		NEW 119 **475**			
C-Class	(202)	x1	03/93 → 04/00			116 **135**		
		x1	06/96 → 03/01			116 **135**		116 **121**
	(203)		05/00 → 09/03	– SPOILER –		116 **612**	116 **191**	
			10/03 → 03/07	4	119 **353**			
			10/03 → 03/07	4	119 **375**			
		Sportcoupé	10/03 → 05/08	4	119 **353**			
			10/03 → 05/08	4	119 **375**			
			04/01 → 09/03	– SPOILER –		116 **612**	116 **191**	116 **121**
			10/03 → 10/07	4	119 **353**			
			10/03 → 10/07	4	119 **375**			
	(204)		04/07 → 12/08	1	119 **275**			
			01/09 → 03/13	1	119 **299**			
			04/13 → 03/14	6	119 **348**			
			06/11 → 02/13	1	119 **299**			
			03/13 → 10/15	6	119 **348**			
			12/07 → 12/08	1	119 **275**			116 **530**
			01/09 → 03/13	1	119 **299**			116 **530**
			04/13 → 08/14	6	119 **348**			116 **530**
	(205)		09/14 →		NEW 119 **472**			
			11/15 →		NEW 119 **472**			
			07/16 →		NEW 119 **472**			
			09/14 →		NEW 119 **472**			119 **521**
Citan / Combi	(415)		10/12 →	8	119 **293**	119 **855**	119 **855**	116 **546**
			10/12 →	8	119 **293**	119 **855**	119 **855**	
			10/12 →	3	119 **392**			116 **546**
			10/12 →	3	119 **392**			
CLA-Class	(117)		04/13 → 07/15	2	119 **284**			
			08/15 →		NEW 119 **473**			
		Shooting Brake	03/15 → 07/15	2	119 **284**			NEW 119 **526**
			08/15 →		NEW 119 **473**			
CLC-Class	(203)		06/08 → 06/10	4	119 **353**			
			06/08 → 06/10	4	119 **375**			
CL-Class	(215)		10/00 → 05/06	1	119 **438**			
	(216)		10/06 →	1	119 **438**			
CLK-Class	(208)	x1	01/97 → 12/01			116 **135**		
		x1	10/98 → 12/01			116 **135**		
	(209)		05/02 → 04/09	4	119 **353**			
			05/02 → 04/09	4	119 **375**			
CLS-Class	(219)		10/04 → 12/10	1	119 **381**			
	(218)		01/11 → 03/14	1	119 **299**			
			04/14 →	6	119 **348**			
		Shooting Brake	10/12 → 04/14	1	119 **299**			NEW 119 **526**
		Shooting Brake	04/14 →	6	119 **348**			NEW 119 **526**
E-Class	(124)	x1	07/93 → 06/95			116 **135**		
		x1	07/93 →			116 **135**		
		x1	09/93 →			116 **135**		
		x1	07/93 → 05/96			116 **135**		116 **109**
	(207)		05/09 → 02/13	1	119 **299**			
			03/13 →	6	119 **348**			
	(210)	x1	07/95 → 02/02			116 **168**		
		x1	06/96 → 01/03			116 **168**		116 **121**
	(211)		02/02 → 02/09	1	119 **381**			
			02/03 → 10/09	1	119 **381**			116 **121**
	(212)		03/09 → 03/14	1	119 **430**			
			04/14 → 02/16	6	119 **348**			

Flat Blade OE connections

❶ = ❷ = ❸ = ❹ =

❺ = ❻ = ❼ = ❽ =

OE Flachwischer Verbindungssysteme

For/Für				– SPOILER – – HBLADE –				
MERCEDES (...)								
E-Class	(212)		11/09 → 03/14	❶	119 **430**			116 **520**
			04/14 → 09/16	❻	119 **348**			116 **520**
	(213)		03/16 →		NEW 119 **474**			
			10/16 →		NEW 119 **474**			
		All-Terrain	12/16 →		NEW 119 **474**			
	(238)		04/17 →		NEW 119 **474**			
			09/17 →		NEW 119 **474**			
G-Class	(460)		03/79 → 08/92			116 **121**	116 **121**	116 **121**
			03/79 → 08/92	– SPOILER –		116 **601**		
			03/79 → 08/92	❽		119 **840**	119 **840**	116 **121**
	(463)		09/89 →			116 **121**	116 **121**	116 **121**
			09/89 →	❽		119 **840**	119 **840**	116 **121**
GL-Class	(164)		09/06 → 11/12	❷	119 **397**			116 **520**
	(166)		12/12 → 10/15	❻	119 **435**			116 **520**
GLA-Class	(156)		03/14 → 08/15	❷	119 **284**			119 **522**
			09/15 →		NEW 119 **473**			
GLC-Class	(X253)		10/15 →		NEW 119 **472**			NEW 119 **526**
			09/16 →		NEW 119 **472**			
GLE-Class	(C166)		04/15 →	❻	119 **435**			
	(X166)		08/15 →	❻	119 **435**			116 **520**
GLK-Class	(204)		09/08 → 02/14	❶	119 **286**			116 **520**
			03/14 → 09/15	❻	119 **349**			116 **520**
GLS-Class	(166)		11/15 →	❻	119 **435**			116 **520**
M-Class	(163)		09/97 → 06/05		116 **222**	116 **166**	116 **166**	116 **121**
			09/97 → 06/05	– SPOILER –		116 **606**		
			09/97 → 06/05	❽		119 **855**	119 **855**	116 **121**
	(164)		07/05 → 10/11	❷	119 **397**			116 **520**
	(166)		11/11 → 07/15	❻	119 **435**			116 **520**
R-Class	(251)		10/05 → 07/13	❷	119 **397**			116 **520**
S-Class	(116)		08/72 → 09/80		116 **226**	116 **109**	116 **109**	
	(126)		10/79 → 06/91		116 **222**	116 **166**	116 **166**	
	(220)		10/00 → 09/05	❶	119 **389**			
	(221)		10/05 → 08/13	❶	119 **389**			
	(222)		09/13 →	❷	119 **339**			
SEC-Class	(126)		09/81 → 06/91		116 **222**	116 **166**	116 **166**	
SL-Class	(107)		12/75 → 08/89		116 **226**	116 **109**	116 **109**	
			08/77 → 09/81		116 **218**	116 **126**	116 **126**	
	(129)	x1	03/89 → 08/89			116 **148**		
	(230)		10/01 → 03/12	❶	119 **438**			
SLC-Class	(173)		03/16 →	❷	119 **354**			
			03/16 →	❷	119 **324**			
SLK-Class	(170)		01/96 → 02/04		116 **222**	116 **166**	116 **166**	
			01/96 → 02/04	– SPOILER –		116 **606**		
			01/96 → 02/04	❽		119 **855**	119 **855**	
	(171)		03/04 → 03/11	❷	119 **354**			
			03/04 → 03/11	❷	119 **324**			
	(172)		04/11 → 02/16	❷	119 **354**			
			04/11 → 02/16	❷	119 **324**			
SLS AMG	(197)		10/10 → 02/15	❶	119 **252**			
			10/10 → 02/15	❶	119 **252**			
Sprinter			06/91 → 04/95		116 **220**	116 **112**	116 **112**	
			06/91 → 04/95	❽		119 **850**	119 **850**	
			05/95 → 05/06			116 **148**	116 **112**	
			05/95 → 05/06	❽		119 **860**	119 **855**	
			06/06 →	❷	119 **407**			119 **508**
Vaneo	(414)		04/02 → 03/04	– SPOILER –		116 **618**	116 **619**	116 **121**
			04/02 → 03/04	❽	119 **782**	119 **865**	119 **865**	116 **121**
			04/04 → 07/06	❷	119 **388**			
V-Class	(638)		09/96 → 08/03			116 **153**	116 **154**	
	(447)		06/14 →		NEW 119 **476**			
Viano			09/03 → 10/05	– SPOILER –	116 **365**			
	(639)		11/05 → 02/11	❷	119 **398**			
			03/11 → 06/14	❷	119 **398**			NEW 119 **530**
Vito			09/95 → 08/03			116 **153**	116 **154**	
			09/03 → 10/05	– SPOILER –	116 **365**			
			09/03 → 10/05	– SPOILER –	116 **365**			
			11/05 → 05/14	❷	119 **398**			

4

Flat Blade OE connections

❶ = ❷ = ❸ = ❹ =

OE Flachwischer Verbindungssysteme

❺ = ❻ = ❼ = ❽ =

For/Für			2	– SPOILER – / – HBLADE –				
MERCEDES (...)								
Vito			11/05 → 05/14	❷	119 **398**			
			06/14 →		NEW 119 **476**			
MICROCAR								
MC Highland / Campus, Cargo, Family		x1	2008 → 2012			116 **166**		
MINI								
Mini	(R50 / R53)		09/01 → 02/04		116 **226**	116 **109**	116 **126**	
			09/01 → 02/04	– SPOILER –		116 **602**		
			03/04 → 10/06		116 **226**	116 **109**		116 **530**
			03/04 → 10/06	– SPOILER –		116 **602**		
	(R56)		11/06 → 04/12		116 **226**	116 **109**	116 **126**	116 **530**
			11/06 → 04/12	– SPOILER –		116 **602**		
			05/12 → 02/14	❸	119 **263**			
	(F56)		03/14 →		116 **226**	116 **109**	116 **126**	116 **506**
			03/14 →	– HBLADE – ❽		116 **176**	116 **177**	116 **506**
			03/14 →		116 **226**	116 **109**	116 **126**	116 **506**
	(F55)		10/14 →			116 **109**	116 **126**	116 **506**
			10/14 →			116 **109**	116 **126**	116 **506**
	(R52 /R57)		09/04 → 04/12		116 **226**	116 **109**	116 **126**	
			09/04 → 04/12	– SPOILER –		116 **602**		
			05/12 → 03/16	❸	119 **263**			
	(F57)		04/16 →		116 **226**	116 **109**	116 **126**	
			04/16 →	– HBLADE – ❽		116 **176**	116 **177**	
			04/16 →		116 **226**	116 **109**	116 **126**	
	(R55)		11/07 → 04/12		116 **226**	116 **109**	116 **126**	119 **522**
			11/07 → 04/12	– SPOILER –		116 **602**		
			05/12 → 09/15	❸	119 **263**			119 **522**
	(F54)		10/15 →	❻	NEW 119 **465**			
	Countryman		10/10 →	❷	119 **257**			116 **506**
	Paceman		01/13 →	❷	119 **257**			119 **523**
MITSUBISHI								
3000 GT			10/92 →		116 **220**	116 **134**	116 **112**	
			10/92 →	– SPOILER –	116 **313**	116 **607**		
			10/92 →	❽		119 **853**	119 **850**	
ASX			07/10 →			116 **148**	116 **134**	
			07/10 →	– HBLADE – ❽		116 **183**	116 **179**	
			07/10 →	❽	119 **764**	119 **860**	119 **853**	
			07/10 →			116 **148**	116 **112**	
			07/10 →	❽		119 **860**	119 **850**	
Attrage / Mirage G4		4	04/14 →			116 **166**	116 **119**	
			04/14 →	❽		119 **855**	119 **835**	
Canter		x1	1976 → 1979			116 **119**		
			01/80 → 12/86			116 **121**	116 **121**	
			01/87 → 12/96		116 **226**	116 **109**	116 **109**	
			01/87 → 12/96	❽		119 **845**	119 **845**	
			01/97 →		116 **220**	116 **112**	116 **112**	
			01/97 →	❽		119 **850**	119 **850**	
Carisma		4	01/95 →	– SPOILER –	116 **313**	116 **607**	116 **112**	
			01/95 →	❽		119 **853**	119 **850**	
		5	01/95 → 02/99		116 **220**	116 **134**	116 **112**	116 **112**
			01/95 → 02/99	– SPOILER –	116 **313**	116 **607**		
			01/95 → 02/99	❽		119 **853**	119 **850**	116 **112**
			03/99 →	– SPOILER –	116 **313**	116 **607**	116 **112**	116 **166**
			03/99 →	❽		119 **853**	119 **850**	116 **166**
Celeste			1975 → 1980			116 **122**	116 **122**	
Chariot			1984 → 02/88		116 **226**	116 **109**	116 **109**	116 **120**
			03/88 →			116 **125**	116 **125**	116 **120**
Colt	1		03/78 → 09/83			116 **122**	116 **122**	
	2		10/83 → 09/87			116 **125**	116 **125**	116 **125**
	3		10/87 → 11/91			116 **129**	116 **124**	116 **120**
			10/87 → 11/91	– SPOILER –		116 **623**		
			10/87 → 11/91	❽		119 **848**	119 **845**	116 **120**
	4		12/91 → 02/96		116 **307**	116 **112**	116 **109**	116 **119**
			12/91 → 02/96	– SPOILER –		116 **604**		
			12/91 → 02/96	❽		119 **850**	119 **840**	116 **119**
	5		03/96 → 05/04		116 **310**	116 **134**	116 **126**	116 **119**

4

Flat Blade OE connections

❶ = ❷ = ❸ = ❹ =

OE Flachwischer Verbindungssysteme

❺ = ❻ = ❼ = ❽ =

For/Für			2	– SPOILER – – HBLADE –				
MITSUBISHI (...)								
Colt	5		03/96 → 05/04	8		119 **853**	119 **848**	116 **119**
Cordia			11/81 → 1985			116 **125**	116 **125**	116 **125**
Eclipse			01/91 → 12/95		116 **220**	116 **112**	116 **112**	116 **125**
			01/91 → 12/95	– SPOILER –		116 **604**		
			01/91 → 12/95	8		119 **850**	119 **850**	116 **125**
Galant			1971 → 1974			116 **120**	116 **120**	
			1974 → 04/80			116 **121**	116 **121**	
			05/80 → 06/83			116 **125**	116 **125**	116 **122**
			07/83 → 11/87			116 **125**		
		4	12/87 → 04/92		116 **226**	116 **126**	116 **109**	
			12/87 → 04/92	– SPOILER –		116 **623**		
			12/87 → 04/92	8		119 **848**	119 **845**	
			05/92 → 02/97			116 **166**	116 **126**	
			05/92 → 02/97	– SPOILER –		116 **606**		
			05/92 → 02/97	8		119 **855**	119 **848**	
			03/97 →			116 **166**	116 **109**	
			03/97 →	– SPOILER –		116 **606**		
			03/97 →	8		119 **855**	119 **845**	
		Hatchback 5	12/87 → 04/92		116 **226**	116 **126**	116 **109**	116 **122**
			12/87 → 04/92	– SPOILER –		116 **623**		
			12/87 → 04/92	8		119 **848**	119 **845**	116 **122**
			05/92 → 02/97			116 **166**	116 **126**	116 **134**
			05/92 → 02/97	– SPOILER –		116 **606**		
			05/92 → 02/97	8		119 **855**	119 **848**	116 **134**
			03/97 →			116 **166**	116 **109**	116 **121**
			03/97 →	– SPOILER –		116 **606**		
			03/97 →	8		119 **855**	119 **845**	116 **121**
Grandis			01/08 → 08/11			116 **137**	116 **166**	116 **515**
HSX			09/91 →			116 **166**	116 **112**	116 **166**
i-Miev		x1	01/11 →	– HBLADE – 8		116 **187**		116 **515**
			01/11 →	8		119 **865**		
			01/11 →	8		119 **865**		116 **515**
L200			09/79 → 09/96			116 **122**	116 **122**	
			10/96 → 02/06		116 **218**	116 **126**	116 **126**	
			10/96 → 02/06	– SPOILER –		116 **623**		
			10/96 → 02/06	8		119 **848**	119 **848**	
			03/06 → 08/15			116 **166**	116 **126**	
			03/06 → 08/15	– SPOILER –		116 **606**		
			03/06 → 08/15	8	119 **740**	119 **855**	119 **848**	
			09/15 →			116 **166**	116 **109**	
			09/15 →	– SPOILER –		116 **606**		
			09/15 →	8		119 **855**	119 **845**	
			09/15 →			116 **166**	116 **109**	
			09/15 →	– SPOILER –		116 **606**		
			09/15 →	8		119 **855**	119 **845**	
L300			1979 → 1986			116 **122**	116 **121**	
			1987 → 1990			116 **124**	116 **124**	116 **121**
			1991 →		116 **226**	116 **109**	116 **109**	116 **120**
			1991 →	8		119 **845**	119 **845**	116 **120**
Lambda			1971 → 1974			116 **120**	116 **120**	
			1974 → 1979			116 **121**	116 **121**	
			1979 → 1985			116 **124**	116 **124**	
			1985 → 1990			116 **124**	116 **120**	
			1990 → 05/93		116 **226**	116 **126**	116 **109**	
			1990 → 05/93	8		119 **848**	119 **845**	
			06/93 →			116 **166**	116 **126**	
			06/93 →	8		119 **855**	119 **848**	
Lancer		4	1973 → 1978			116 **120**	116 **120**	
			1978 → 02/79			116 **122**	116 **122**	
			03/79 → 09/83			116 **125**	116 **125**	
			10/87 → 1988			116 **129**		
			1988 → 04/92			116 **129**	116 **124**	
			05/92 → 03/04		116 **307**	116 **112**	116 **109**	
			05/92 → 03/04	– SPOILER –		116 **604**		
			05/92 → 03/04	8		119 **850**	119 **845**	
		Hatchback 5	10/87 → 04/92			116 **129**	116 **129**	
			10/83 → 04/92			116 **125**	116 **125**	116 **109**

4

Flat Blade OE connections

❶ = ❷ = ❸ = ❹ =

OE Flachwischer Verbindungssysteme

❺ = ❻ = ❼ = ❽ =

For/Für				– SPOILER – – HBLADE –				
MITSUBISHI (...)								
Lancer			05/92 → 03/04		116 **307**	116 **112**	116 **109**	116 **121**
			05/92 → 03/04	– SPOILER –		116 **604**		
			05/92 → 03/04	❽		119 **850**	119 **845**	116 **121**
			04/04 → 05/08			116 **148**	116 **109**	
			04/04 → 05/08	❽		119 **860**	119 **845**	
		Evolution 8 / 9	04/04 → 04/08			116 **148**	116 **109**	
			04/04 → 04/08	❽		119 **860**	119 **845**	
		Evolution X	05/08 → 08/14			116 **148**	116 **121**	
			05/08 → 08/14	❽	119 **760**			
		Sportback / Ralliart	10/08 →			116 **148**	116 **121**	116 **531**
			10/08 →	❽	119 **760**			116 **531**
Mirage			03/78 → 1983			116 **122**	116 **122**	
			1984 → 03/88			116 **125**	116 **125**	116 **125**
			04/88 → 1991			116 **129**	116 **124**	116 **120**
			1992 →		116 **307**	116 **112**	116 **109**	116 **119**
			1992 →	❽		119 **850**	119 **845**	116 **119**
			04/13 →			116 **166**	116 **119**	116 **513**
			04/13 →	❽		119 **855**	119 **835**	116 **513**
Montero		3 5	04/00 → 11/06	❽		119 **850**	119 **848**	
			12/06 →	❽	119 **742**	119 **855**	119 **850**	
Outlander			05/03 → 01/07			116 **166**	116 **109**	
			05/03 → 01/07	❽		119 **855**	119 **845**	
			02/07 → 09/12			116 **148**	116 **134**	116 **515**
			02/07 → 09/12	– HBLADE – ❽		116 **183**	116 **179**	116 **515**
			02/07 → 09/12	❽		119 **860**	119 **853**	116 **515**
			02/07 → 09/12			116 **148**	116 **112**	116 **515**
			02/07 → 09/12	❽		119 **860**	119 **850**	116 **515**
			10/12 →	– HBLADE – ❽		116 **185**	116 **176**	116 **515**
			10/12 →	❽		119 **865**	119 **845**	116 **515**
			10/12 →	❽		119 **865**	119 **845**	116 **515**
Pajero	1		12/82 → 08/84			116 **122**	116 **121**	116 **120**
			09/84 → 05/87			116 **122**	116 **122**	116 **120**
	2		12/90 → 03/00		116 **218**	116 **126**	116 **126**	116 **120**
			12/90 → 03/00	– SPOILER –		116 **623**		
			12/90 → 03/00	❽		119 **848**	119 **848**	116 **120**
			12/90 → 03/00		116 **218**	116 **126**	116 **126**	116 **119**
			12/90 → 03/00	– SPOILER –		116 **623**		
			12/90 → 03/00	❽		119 **848**	119 **848**	116 **119**
	3		04/00 → 11/06		116 **218**	116 **112**	116 **126**	
			04/00 → 11/06	❽		119 **850**	119 **848**	
	4		12/06 →			116 **166**	116 **112**	116 **515**
			12/06 →	– SPOILER –		116 **606**		
			12/06 →	❽	119 **742**	119 **855**	119 **850**	116 **515**
	Pinin		01/00 →		116 **218**	116 **126**	116 **126**	116 **121**
			01/00 →	❽		119 **848**	119 **848**	116 **121**
	Sport		12/98 →		116 **220**	116 **112**	116 **112**	116 **121**
			12/98 →	– SPOILER –		116 **604**		
			12/98 →	❽		119 **850**	119 **850**	116 **121**
Sapporo			11/80 → 05/87			116 **125**	116 **125**	
			06/87 →			116 **125**	116 **124**	
Shogun	1		05/82 → 1991			116 **121**	116 **121**	
	2		1992 →		116 **218**	116 **126**	116 **126**	116 **120**
Sigma			1984 → 12/88			116 **124**	116 **124**	116 **120**
			1990 →		116 **218**	116 **112**	116 **126**	
			1990 →	– SPOILER –	116 **335**	116 **604**		
			1990 →	❽		119 **850**	119 **848**	
Space Runner			06/91 →			116 **166**	116 **109**	116 **121**
			06/91 →	❽		119 **855**	119 **845**	116 **121**
Space Star			11/98 → 12/07			116 **134**	116 **109**	116 **119**
			11/98 → 12/07	– SPOILER –		116 **607**		
			11/98 → 12/07	❽		119 **853**	119 **845**	116 **119**
			04/13 →			116 **166**	116 **119**	116 **513**
			04/13 →	❽		119 **855**	119 **835**	116 **513**
Space Wagon			05/91 → 08/99			116 **166**	116 **109**	116 **121**
			05/91 → 08/99	❽		119 **855**	119 **845**	116 **121**
Starion			03/82 →			116 **125**	116 **125**	116 **125**
Tredia			1982 → 1988			116 **125**	116 **125**	116 **125**

Flat Blade OE connections

❶ = ❷ = ❸ = ❹ =

OE Flachwischer Verbindungssysteme

❺ = ❻ = ❼ = ❽ =

For/Für				– SPOILER – – HBLADE –				
MITSUBISHI (...)								
Valley			1988 →		116 **226**	116 **109**	116 **109**	
			1988 →	❽		119 **845**	119 **845**	
MOSKWICH								
403 / 408 / 426 / 1400			→ 12/76			116 **116**	116 **116**	
412 / 427 / 434			→ 12/76			116 **116**	116 **116**	
2141			12/86 →		116 **226**	116 **109**	116 **109**	
			12/86 →	❽		119 **845**	119 **845**	
Aleko S			01/91 →		116 **226**	116 **109**	116 **109**	
			01/91 →	❽		119 **845**	119 **845**	
Elite			01/67 → 12/72			116 **121**	116 **121**	
			01/67 → 12/72	– SPOILER –		116 **601**		
NISSAN								
100 NX			10/90 →		116 **218**	116 **112**	116 **126**	
			10/90 →	❽		119 **850**	119 **848**	
200 SX			09/88 → 06/94		116 **220**	116 **112**	116 **112**	
			09/88 → 06/94	– SPOILER –		116 **604**		
			09/88 → 06/94	❽		119 **850**	119 **850**	
			07/94 →		116 **220**	116 **134**	116 **112**	116 **109**
			07/94 →	❽		119 **853**	119 **850**	116 **109**
240 KGT			1973 → 1984			116 **124**	116 **124**	
300 ZX			01/84 → 12/89		116 **218**	116 **126**	116 **126**	
			01/84 → 12/89	– SPOILER –		116 **623**		
			01/84 → 12/89	❽		119 **848**	119 **848**	
	V6		01/90 → 12/99		116 **220**	116 **134**	116 **112**	116 **126**
			01/90 → 12/99	– SPOILER –	116 **313**	116 **607**		
			01/90 → 12/99	❽		119 **853**	119 **853**	116 **126**
350 Z			09/03 → 05/09		116 **307**	116 **112**	116 **109**	
			09/03 → 05/09	– SPOILER –		116 **604**		
			09/03 → 05/09	❽		119 **850**	119 **845**	
		Roadster	01/05 → 05/09		116 **307**	116 **112**	116 **109**	
			01/05 → 05/09	– SPOILER –		116 **604**		
			01/05 → 05/09	❽		119 **850**	119 **845**	
1800 / 2000 / 2300						116 **121**	116 **121**	
Almera		3 5	07/95 → 02/00		116 **310**	116 **134**	116 **126**	116 **119**
			07/95 → 02/00	– SPOILER –	116 **311**	116 **607**		
			07/95 → 02/00	❽		119 **853**	119 **848**	116 **119**
			03/00 → 09/02			116 **166**	116 **121**	116 **119**
			03/00 → 09/02	❽		119 **853**	119 **840**	116 **119**
			10/02 → 12/06			116 **166**	116 **121**	116 **540**
			10/02 → 12/06	– SPOILER –		116 **607**		
			10/02 → 12/06	❽		119 **853**	119 **840**	116 **540**
		4	07/95 → 03/00		116 **310**	116 **134**	116 **126**	
			07/95 → 03/00	– SPOILER –	116 **311**	116 **607**		
			07/95 → 03/00	❽		119 **853**	119 **848**	
Almera Tino			06/00 → 12/06			116 **137**	116 **109**	116 **112**
			06/00 → 12/06	❽		119 **865**	119 **845**	116 **112**
Arna			1983 → 1985		116 **307**	116 **112**	116 **109**	116 **109**
			1983 → 1985	– SPOILER –		116 **604**		
			1983 → 1985	❽		119 **850**	119 **845**	116 **109**
Bluebird	(910)		1971 → 1979			116 **122**	116 **122**	
			1980 → 1987		116 **226**	116 **109**	116 **109**	
			1980 → 1987	❽		119 **845**	119 **845**	
			1980 → 1984			116 **121**	116 **121**	
			1980 → 1984	❽		119 **840**	119 **840**	
			1980 → 1984		116 **226**	116 **109**	116 **109**	
	(U11)		10/83 → 1987		116 **218**	116 **126**	116 **126**	
			10/83 → 1987	❽		119 **848**	119 **848**	
			10/83 → 1987		116 **226**	116 **109**	116 **109**	
			10/83 → 1987	❽		119 **845**	119 **845**	
	(T12)		12/85 →		116 **218**	116 **126**	116 **126**	
			12/85 →	– SPOILER –		116 **623**		
			12/85 →	❽		119 **848**	119 **848**	
	(T72)		09/88 →		116 **218**	116 **126**	116 **126**	
			09/88 →	– SPOILER –		116 **623**		
			09/88 →	❽		119 **848**	119 **848**	
Cabstar			1984 → 2007		116 **226**	116 **109**	116 **109**	

4

Flat Blade OE connections

❶ = ❷ = ❸ = ❹ =

❺ = ❻ = ❼ = ❽ =

OE Flachwischer Verbindungssysteme

For/Für			2 in 1	– SPOILER – – HBLADE –				
NISSAN (...)								
Cabstar			2008 →	8		119 **850**	119 **850**	
Cherry	(F2)		11/75 → 09/78			116 **120**	116 **120**	
			11/75 → 09/78			116 **120**	116 **120**	
	(N10)		09/78 → 03/82			116 **124**	116 **124**	
	(N12)		04/82 → 1986			116 **126**	116 **125**	
Cube			10/09 →	8	119 **711**	119 **848**	119 **848**	116 **515**
Fairlady Z			1984 → 1986			116 **125**	116 **125**	
			1990 → 1999		116 **220**	116 **134**	116 **112**	116 **126**
Interstar			02/02 → 09/11		116 **341**			
Juke			10/10 →	8		119 **855**	119 **835**	116 **520**
			10/10 →	8		119 **855**	119 **835**	116 **520**
King Cab			01/93 →		116 **218**	116 **126**	116 **126**	
			01/93 →	– SPOILER –		116 **623**		
			01/93 →	8		119 **848**	119 **848**	
Kubistar			07/01 → 03/10		116 **220**	116 **112**	116 **112**	116 **550**
			07/01 → 03/10	8		119 **850**	119 **850**	116 **550**
			11/03 → 03/10		116 **220**	116 **112**	116 **112**	116 **119**
			11/03 → 03/10	8		119 **850**	119 **850**	116 **119**
Laurel	(C31)		06/81 → 12/84			116 **124**	116 **124**	
	(C32)		01/85 → 06/90		116 **218**	116 **126**	116 **126**	
			01/85 → 06/90	8		119 **848**	119 **848**	
Leaf			06/11 →	8	119 **780**	119 **865**	119 **840**	
March			11/82 → 09/92		116 **226**	116 **109**	116 **109**	
			10/92 → 08/00		116 **307**	116 **112**		116 **109**
Maxima			12/88 → 09/94			116 **134**	116 **126**	
			12/88 → 09/94	– SPOILER –	116 **311**	116 **607**		
			12/88 → 09/94	8		119 **853**	119 **848**	
	QX		10/94 → 04/00			116 **166**	116 **134**	
			10/94 → 04/00	8		119 **855**	119 **853**	
			05/00 → 01/06	8		119 **865**	119 **840**	
Micra	(K10)	3 5	11/82 → 09/92		116 **226**	116 **109**	116 **109**	
			11/82 → 09/92	– SPOILER –		116 **602**		
			11/82 → 09/92	8		119 **845**	119 **845**	
	(K11)	3 5	10/92 → 08/00		116 **307**	116 **112**	116 **109**	116 **109**
			10/92 → 08/00	– SPOILER –		116 **604**		
			10/92 → 08/00	8		119 **850**	119 **845**	116 **109**
			09/00 → 12/02		116 **307**	116 **112**	116 **109**	116 **550**
			09/00 → 12/02	– SPOILER –		116 **604**		
			09/00 → 12/02	8		119 **850**	119 **845**	116 **550**
	(K12)	3 5	01/03 → 05/05	– SPOILER –		116 **607**	116 **109**	116 **520**
			01/03 → 05/05	8		119 **853**	119 **840**	116 **520**
			06/05 → 10/10	– SPOILER –		116 **607**	116 **109**	116 **550**
			06/05 → 10/10	8		119 **853**	119 **840**	116 **550**
			10/05 → 2009	– SPOILER –		116 **607**	116 **109**	
			10/05 → 2009	8		119 **853**	119 **840**	
	(K13)		11/10 → 02/17	8		119 **853**	119 **835**	116 **515**
			11/10 → 02/17	8		119 **853**	119 **835**	116 **515**
Navara			05/05 →			116 **148**	116 **126**	
			05/05 →	8	119 **762**	119 **860**	119 **848**	
	NP300		01/16 →	8	119 **760**	119 **860**	119 **840**	
			01/16 →	8		119 **860**	119 **840**	
Note			10/05 → 09/13	8		119 **860**	119 **835**	116 **515**
NV 200 / Evalia			12/09 →			116 **166**	116 **121**	116 **531**
			12/09 →	8		119 **855**	119 **840**	116 **531**
NV 300			11/16 →	6	119 **431**			
			11/16 →	6	119 **431**			116 **550**
NV 400			10/11 →			116 **137**	116 **137**	
			10/11 →	8		119 **865**	119 **865**	
Pathfinder			09/97 → 12/04			116 **166**	116 **112**	116 **515**
			09/97 → 12/04	8		119 **855**	119 **853**	116 **515**
			03/05 →			116 **148**	116 **126**	116 **515**
			03/05 →	8	119 **762**	119 **860**	119 **848**	116 **515**
Patrol			11/79 → 12/85			116 **121**	116 **121**	
			01/86 → 08/88		116 **226**	116 **109**	116 **109**	
			01/86 → 08/88	– SPOILER –		116 **602**		
			01/86 → 08/88	8		119 **845**	119 **845**	
Patrol GR			08/87 → 02/98		116 **226**	116 **109**	116 **109**	

Flat Blade OE connections

❶ = ❷ = ❸ = ❹ =

OE Flachwischer Verbindungssysteme

❺ = ❻ = ❼ = ❽ =

For/Für			2 3	– SPOILER – – HBLADE –				
NISSAN (...)								
Patrol GR			08/87 → 02/98	– SPOILER –		116 **602**	116 **109**	
			08/87 → 02/98	8		119 **845**	119 **845**	
			03/98 →		116 **218**	116 **112**	116 **126**	
			03/98 →	– SPOILER –	116 **335**	116 **604**		
			03/98 →	8		119 **848**	119 **850**	
Pick-up			08/79 → 08/85		116 **218**	116 **126**	116 **126**	
			09/85 → 08/98			116 **121**	116 **121**	
			09/98 →		116 **218**	116 **126**	116 **126**	
			09/98 →	8		119 **848**	119 **848**	
Pixo			06/09 →	8		119 **853**	119 **835**	
Prairie			12/82 → 12/85		116 **226**	116 **109**	116 **109**	
			12/82 → 12/85	8		119 **845**	119 **845**	
			01/86 → 09/88		116 **218**	116 **126**	116 **126**	
			01/86 → 09/88	– SPOILER –		116 **623**		
			01/86 → 09/88	8		119 **848**	119 **848**	
Primastar			03/02 →	– SPOILER –	116 **340**			
			03/02 →	8		119 **860**	119 **853**	
			03/02 →	– SPOILER –	116 **340**			116 **550**
			03/02 →	8		119 **860**	119 **853**	
Primera	1		02/90 → 09/96		116 **310**	116 **134**	116 **126**	
			02/90 → 09/96	– SPOILER –	116 **311**	116 **607**		
			02/90 → 09/96	8		119 **853**	119 **848**	
			10/96 → 02/02		116 **220**	116 **134**	116 **112**	
			10/96 → 02/02	– SPOILER –	116 **313**	116 **607**		
			10/96 → 02/02	8		119 **853**	119 **850**	
			02/90 → 09/96		116 **310**	116 **134**	116 **126**	116 **134**
			02/90 → 09/96	– SPOILER –	116 **311**	116 **607**		
			02/90 → 09/96	8		119 **853**	119 **848**	116 **134**
			10/96 → 04/02		116 **220**	116 **134**	116 **112**	116 **134**
			10/96 → 04/02	– SPOILER –	116 **313**	116 **607**		
			10/96 → 04/02	8		119 **853**	119 **850**	116 **134**
			02/90 → 08/97		116 **310**	116 **134**	116 **109**	116 **119**
			02/90 → 08/97	– SPOILER –		116 **607**		
			02/90 → 08/97	8		119 **853**	119 **845**	116 **119**
			03/98 → 02/02		116 **220**	116 **134**	116 **112**	116 **121**
			03/98 → 02/02	– SPOILER –	116 **313**	116 **607**		
			03/98 → 02/02	8		119 **853**	119 **850**	116 **121**
	2		03/02 → 10/06	– SPOILER –		116 **618**	116 **126**	
			03/02 → 10/06	8		119 **865**	119 **848**	
			05/02 → 05/03	– SPOILER –		116 **618**	116 **126**	116 **112**
			05/02 → 05/03	8		119 **865**	119 **848**	116 **112**
			06/03 → 10/06	– SPOILER –		116 **618**	116 **126**	116 **570**
			06/03 → 10/06	8		119 **865**	119 **848**	116 **570**
			03/02 → 10/06	– SPOILER –		116 **618**	116 **126**	116 **550**
			03/02 → 10/06	8		119 **865**	119 **848**	116 **550**
Pulsar			04/82 → 05/86			116 **125**	116 **125**	
			06/86 → 1990		116 **220**	116 **112**	116 **112**	
			09/14 →	6	119 **278**			116 **520**
Qashqai /Qashqai+2			03/07 → 01/14	2	119 **300**			116 **516**
Qashqai			02/14 →			116 **137**	116 **121**	116 **520**
			02/14 →	– HBLADE – 8		116 **185**	116 **174**	116 **520**
			02/14 →	8	119 **780**	119 **865**	119 **840**	116 **520**
			02/14 →			116 **137**	116 **121**	116 **520**
			02/14 →	8		119 **865**	119 **840**	116 **520**
Serena			07/92 →			116 **148**	116 **148**	116 **121**
			07/92 →	8		119 **860**	119 **860**	116 **121**
Silvia			02/78 → 06/86			116 **125**	116 **125**	116 **550**
			07/86 →		116 **218**	116 **126**	116 **126**	
			07/86 →	– SPOILER –		116 **623**		
			07/86 →	8		119 **848**	119 **848**	
Skyline			1979 → 1987			116 **125**	116 **125**	116 **125**
			1987 →		116 **226**	116 **109**	116 **109**	116 **109**
			1987 →	– SPOILER –		116 **602**		
			1987 →	8		119 **845**	119 **845**	116 **109**
Sunny	(B11)		10/81 → 05/86		116 **226**	116 **109**	116 **109**	116 **121**
			10/81 → 05/86	8		119 **845**	119 **845**	116 **121**
			10/81 → 05/86			116 **125**	116 **125**	116 **125**

4

Flat Blade OE connections

❶ = ❷ = ❸ = ❹ =

OE Flachwischer Verbindungssysteme

❺ = ❻ = ❼ = ❽ =

For/Für			2	– SPOILER – – HBLADE –				
NISSAN (...)								
Sunny	(B11)		10/81 → 05/86			116 **121**	116 **121**	116 **121**
			10/81 → 05/86	8		119 **840**	119 **840**	116 **121**
	(B12)		06/86 → 09/90		116 **307**	116 **112**	116 **109**	116 **126**
			06/86 → 09/90	8		119 **850**	119 **845**	116 **126**
			06/86 → 09/90		116 **307**	116 **112**	116 **109**	116 **126**
			06/86 → 09/90	8		119 **850**	119 **845**	116 **126**
			06/86 → 09/90		116 **226**	116 **109**	116 **109**	116 **109**
			06/86 → 09/90	8		119 **845**	119 **845**	116 **109**
	(B12 / N13)		06/86 → 09/90		116 **307**	116 **112**	116 **109**	116 **109**
			06/86 → 09/90	8		119 **850**	119 **845**	116 **109**
	(N14)		10/90 →		116 **310**	116 **134**	116 **126**	116 **119**
			10/90 →	8		119 **853**	119 **848**	116 **119**
			10/90 →		116 **310**	116 **134**	116 **126**	116 **112**
			10/90 →	– SPOILER –	116 **311**	116 **607**		
			10/90 →	8		119 **853**	119 **848**	116 **112**
	(Y10)		10/90 →			116 **134**	116 **109**	
			10/90 →	8		119 **853**	119 **845**	
Terrano	1		08/87 → 02/93		116 **218**	116 **126**	116 **126**	
			08/87 → 02/93	– SPOILER –		116 **623**		
			08/87 → 02/93	8		119 **848**	119 **848**	
	2		03/93 → 12/99		116 **220**	116 **134**	116 **112**	
			03/93 → 12/99	– SPOILER –	116 **313**	116 **607**		
			03/93 → 12/99	8		119 **853**	119 **850**	
			01/00 →		116 **220**	116 **134**	116 **112**	116 **116**
			01/00 →	– SPOILER –	116 **313**	116 **607**		
			01/00 →	8		119 **853**	119 **850**	116 **116**
Tiida	1		01/08 → 04/11	8		119 **860**	119 **835**	116 **540**
	2		05/11 →	8		119 **865**	119 **835**	116 **520**
Trade			1986 →		116 **220**	116 **112**	116 **112**	
			1986 →	8		119 **850**	119 **850**	
Urvan			1981 → 1988		116 **226**	116 **109**	116 **109**	116 **121**
			1989 →		116 **218**	116 **126**	116 **126**	116 **122**
			1989 →	– SPOILER –		116 **623**		
			1989 →	8		119 **848**	119 **848**	116 **122**
Vanette			06/81 → 08/86			116 **122**	116 **122**	116 **122**
			09/86 → 05/95		116 **226**	116 **109**	116 **109**	116 **120**
			09/86 → 05/95	– SPOILER –		116 **602**		
			09/86 → 05/95	8		119 **845**	119 **845**	116 **120**
	Cargo		06/95 →			116 **148**	116 **148**	
			06/95 →	8		119 **860**	119 **860**	
Violet			1973 → 1981			116 **122**	116 **122**	
X-Trail	1		09/01 → 06/07			116 **148**	116 **120**	116 **109**
			09/01 → 06/07	8		119 **860**	119 **840**	116 **109**
	2		07/07 → 06/14			116 **148**	116 **121**	116 **531**
			07/07 → 06/14	8		119 **860**	119 **840**	116 **531**
	3		07/14 →			116 **137**	116 **121**	116 **520**
			07/14 →	– HBLADE – 8		116 **185**	116 **174**	116 **520**
			07/14 →	8	119 **780**	119 **865**	119 **840**	116 **520**
			07/14 →			116 **137**	116 **121**	116 **520**
			07/14 →	8		119 **865**	119 **840**	116 **520**
OPEL								
Adam			03/13 →	6	119 **265**			116 **546**
Adam Rocks			08/14 →	6	119 **265**			116 **546**
Admiral			1978 →		116 **226**	116 **109**	116 **109**	
			1978 →	8		119 **845**	119 **845**	
Agila	A		05/00 → 02/08		116 **307**	116 **112**	116 **109**	116 **119**
			05/00 → 02/08	– SPOILER –		116 **604**		
			05/00 → 02/08	8		119 **850**	119 **845**	116 **119**
	B		03/08 →			116 **166**	116 **121**	
			03/08 →	– SPOILER –		116 **606**		
			03/08 →	8		119 **855**	119 **840**	
Ampera			11/11 → 06/15	6	119 **281**			
Antara			12/06 →			116 **148**	116 **121**	
			12/06 →	8		119 **860**	119 **840**	
Arena			02/98 → 2002		116 **220**	116 **112**	116 **112**	
			02/98 → 2002	– SPOILER –		116 **604**		

4

Flat Blade OE connections

❶ = ❷ = ❸ = ❹ =

❺ = ❻ = ❼ = ❽ =

OE Flachwischer Verbindungssysteme

For/Für			2 3	– SPOILER – – HBLADE –				
▶ OPEL (...)								
Arena			02/98 → 2002	8		119 **850**	119 **850**	
Ascona	A		08/70 → 07/75			116 **121**	116 **121**	
			08/70 → 07/75	– SPOILER –		116 **601**		
			08/70 → 07/75			116 **121**	116 **121**	
			08/70 → 07/75	– SPOILER –		116 **601**		
	B		08/75 → 07/81		116 **226**	116 **109**	116 **109**	
			08/75 → 07/81	– SPOILER –		116 **602**		
			08/75 → 07/81	8		119 **845**	119 **845**	
	C		08/81 → 07/88		116 **226**	116 **109**	116 **109**	116 **112**
			08/81 → 07/88	– SPOILER –		116 **602**		
			08/81 → 07/88	8		119 **845**	119 **845**	116 **112**
			08/81 → 07/88		116 **226**	116 **109**	116 **109**	
			08/81 → 07/88	– SPOILER –		116 **602**		
			08/81 → 07/88	8		119 **845**	119 **845**	
Astra	F	3	09/91 → 06/98		116 **226**	116 **109**	116 **109**	116 **109**
			09/91 → 06/98	– SPOILER –	116 **301**	116 **602**		
			09/91 → 06/98	8		119 **845**	119 **845**	116 **109**
		4	09/91 → 06/98		116 **226**	116 **109**	116 **109**	
			09/91 → 06/98	– SPOILER –	116 **301**	116 **602**		
			09/91 → 06/98	8		119 **845**	119 **845**	
		5	09/91 → 03/98			116 **109**	116 **109**	116 **109**
			09/91 → 03/98	– SPOILER –		116 **602**		
			09/91 → 03/98	8		119 **845**	119 **845**	116 **109**
			07/93 → 05/01		116 **226**	116 **109**	116 **109**	
			07/93 → 05/01	– SPOILER –		116 **602**		
			07/93 → 05/01	8		119 **845**	119 **845**	
			09/91 → 03/98		116 **226**	116 **109**	116 **109**	116 **121**
			09/91 → 03/98	– SPOILER –	116 **301**	116 **602**		
			09/91 → 03/98	8		119 **845**	119 **845**	116 **121**
	G	3	07/98 → 04/04			116 **112**	116 **126**	116 **550**
			07/98 → 04/04	– SPOILER –	116 **335**	116 **604**		
			07/98 → 04/04	8	119 **739**	119 **850**	119 **845**	116 **550**
		5	04/98 → 04/04		116 **218**	116 **112**	116 **109**	116 **550**
			04/98 → 04/04	– SPOILER –	116 **335**	116 **604**		
			04/98 → 04/04	8	119 **739**	119 **850**	119 **845**	116 **550**
			06/00 → 12/04		116 **218**	116 **112**	116 **126**	
			06/00 → 12/04	– SPOILER –	116 **335**	116 **604**		
			06/00 → 12/04	8	119 **739**	119 **850**	119 **845**	
			06/01 → 02/06		116 **218**	116 **112**	116 **126**	
			06/01 → 02/06	8	119 **739**	119 **850**	119 **845**	
			04/98 → 08/04		116 **218**	116 **112**	116 **126**	116 **530**
			04/98 → 08/04	– SPOILER –	116 **335**	116 **604**		
			04/98 → 08/04	8	119 **739**	119 **850**	119 **845**	116 **530**
	H	GTC 3	01/05 → 10/11	1	119 **328**			
		5	04/04 → 12/09	1	119 **328**			
		Twin Top	03/06 → 04/13	1	119 **328**			
			12/04 → 12/10	1	119 **328**			116 **516**
		Delvan	09/06 → 12/11	1	119 **328**			
	J		01/10 → 09/15	6	119 **281**			116 **514**
		GTC	11/11 →	6	119 **446**			116 **514**
		Sports Tourer	01/11 → 03/16	6	119 **281**			116 **514**
	K	5	10/15 →	6	NEW 119 **464**			
		Sports Tourer	04/16 →	6	NEW 119 **464**			
Calibra			09/89 → 01/98		116 **218**	116 **126**	116 **126**	116 **126**
			09/89 → 01/98	– SPOILER –		116 **623**		
			09/89 → 01/98	8		119 **848**	119 **848**	116 **126**
Campo			01/96 →		116 **226**	116 **109**	116 **109**	
			01/96 →	8		119 **845**	119 **845**	
Cascada			05/13 →	6	119 **446**			
Combo			1985 → 1992		116 **220**	116 **112**	116 **112**	
			1993 → 09/01		116 **226**	116 **109**	116 **109**	
			1993 → 09/01	– SPOILER –		116 **602**		
			1993 → 09/01	8		119 **845**	119 **845**	
			10/01 → 10/11			116 **112**	116 **121**	116 **119**
			10/01 → 10/11	– SPOILER –		116 **604**		
			10/01 → 10/11	8		119 **850**	119 **840**	116 **119**
			11/11 →	6	119 **378**			116 **121**

Flat Blade OE connections

❶ = ❷ = ❸ = ❹ =

OE Flachwischer Verbindungssysteme

❺ = ❻ = ❼ = ❽ =

For/Für			2 in 1	– SPOILER – / – HBLADE –				
OPEL (...)								
Combo			09/05 → 10/11			116 **112**	116 **121**	116 **550**
			09/05 → 10/11	– SPOILER –		116 **604**		
			09/05 → 10/11	8		119 **850**	119 **840**	116 **550**
			11/11 →	6	119 **378**			NEW 119 **530**
Corsa	A		10/82 → 02/93			116 **121**	116 **121**	116 **121**
			10/82 → 02/93	– SPOILER –		116 **601**		
			10/82 → 02/93	8		119 **840**	119 **840**	116 **121**
		Van	1988 → 02/93			116 **121**	116 **121**	
			1988 → 02/93	8		119 **840**	119 **840**	
	B	3	03/93 → 09/00		116 **226**	116 **109**	116 **109**	116 **121**
			03/93 → 09/00	– SPOILER –	116 **301**	116 **602**		
			03/93 → 09/00	8		119 **845**	119 **845**	116 **121**
		5	03/93 → 09/00		116 **226**	116 **109**	116 **109**	116 **119**
			03/93 → 09/00	– SPOILER –	116 **301**	116 **602**		
			03/93 → 09/00	8		119 **845**	119 **845**	116 **119**
	C		10/00 → 08/06		116 **307**	116 **112**	116 **109**	116 **550**
			10/00 → 08/06	– SPOILER –		116 **604**		
			10/00 → 08/06	8	119 **739**	119 **850**	119 **845**	116 **550**
	D		09/06 → 12/14	2	119 **385**			116 **520**
	E		01/15 →	2	119 **385**			116 **516**
Frontera		3 5	03/91 → 09/98		116 **218**	116 **126**	116 **126**	
			03/91 → 09/98	– SPOILER –		116 **623**		
			03/91 → 09/98	8		119 **848**	119 **848**	
			10/98 →		116 **218**	116 **126**	116 **126**	
			10/98 →	8		119 **848**	119 **848**	
GME	Midi		1989 →		116 **226**	116 **109**	116 **109**	116 **121**
	Rascal		1989 →			116 **121**	116 **121**	116 **121**
GT			07/07 → 2009	8		119 **840**	119 **855**	
Insignia		4	01/09 →			116 **148**	116 **109**	
			01/09 →	– HBLADE – 8		116 **183**	116 **176**	
			01/09 →	8		119 **860**	119 **845**	
		5	01/09 →	– HBLADE – 8		116 **183**	116 **176**	119 **512**
			01/09 →	8		119 **860**	119 **845**	119 **512**
		Sports Tourer	03/09 →			116 **148**	116 **109**	116 **520**
			03/09 →	– HBLADE – 8		116 **183**	116 **176**	116 **520**
			03/09 →	8		119 **860**	119 **845**	116 **520**
Kadett	B		09/65 → 07/73			116 **121**	116 **121**	
			09/65 → 07/73			116 **121**	116 **121**	
	C		08/73 → 07/79			116 **121**	116 **121**	
			08/73 → 07/79	– SPOILER –		116 **601**		
			08/73 → 07/79			116 **121**	116 **121**	
			08/73 → 07/79	– SPOILER –		116 **601**		
			08/73 → 07/79			116 **121**	116 **121**	
			08/73 → 07/79	– SPOILER –		116 **601**		
	D		08/79 → 07/84			116 **121**	116 **121**	
			08/79 → 07/84	– SPOILER –		116 **601**		
			08/79 → 07/84	8		119 **840**	119 **840**	
			08/79 → 07/84			116 **121**	116 **121**	
			08/79 → 07/84	– SPOILER –		116 **601**		
			08/79 → 07/84	8		119 **840**	119 **840**	
	E	GSI	08/84 → 08/91		116 **226**	116 **109**	116 **109**	116 **109**
			08/84 → 08/91	– SPOILER –	116 **301**	116 **602**		
			08/84 → 08/91	8		119 **845**	119 **845**	116 **109**
		GSI	08/84 → 08/91		116 **226**	116 **109**	116 **109**	116 **121**
			08/84 → 08/91	– SPOILER –	116 **301**	116 **602**		
			08/84 → 08/91	8		119 **845**	119 **845**	116 **121**
			10/85 → 08/91		116 **226**	116 **109**	116 **109**	
			10/85 → 08/91	– SPOILER –	116 **301**	116 **602**		
			10/85 → 08/91	8		119 **845**	119 **845**	
			08/84 → 08/91		116 **226**	116 **109**	116 **109**	116 **119**
			08/84 → 08/91	– SPOILER –	116 **301**	116 **602**		
			08/84 → 08/91	8		119 **845**	119 **845**	116 **119**
Karl			06/15 →	8		119 **860**	119 **835**	
Manta			08/75 → 05/79		116 **226**	116 **109**	116 **109**	
			08/75 → 05/79	– SPOILER –		116 **602**		
			08/75 → 05/79	8		119 **845**	119 **845**	
			06/79 → 08/80		116 **226**	116 **109**	116 **109**	116 **109**

Flat Blade OE connections

❶ = ❷ = ❸ = ❹ =

❺ = ❻ = ❼ = ❽ =

OE Flachwischer Verbindungssysteme

For/Für			2 in 3	– SPOILER – HBLADE –				
OPEL (...)								
Manta			06/79 → 08/80	– SPOILER –		116 **602**	116 **109**	116 **109**
			06/79 → 08/80	8		119 **845**	119 **845**	116 **109**
Meriva	A		04/03 → 05/10		116 **337**			116 **550**
			04/03 → 05/10	8	119 **781**	119 **860**	119 **855**	
	B		06/10 →	6	119 **442**			116 **550**
Mokka / Mokka X			10/12 →	6	119 **278**			
Monterey	1		04/92 → 04/95		116 **220**	116 **112**	116 **112**	116 **119**
			04/92 → 04/95	– SPOILER –		116 **604**		
			04/92 → 04/95	8		119 **850**	119 **850**	116 **119**
	1 / 2		05/95 →		116 **220**	116 **112**	116 **112**	116 **120**
			05/95 →	– SPOILER –		116 **604**		
			05/95 →	8		119 **850**	119 **850**	116 **120**
Monza			06/78 → 08/86		116 **226**	116 **109**	116 **109**	116 **112**
			06/78 → 08/86	– SPOILER –		116 **602**		
			06/78 → 08/86	8		119 **845**	119 **845**	116 **112**
Movano			09/98 → 04/10		116 **341**			
			05/10 →			116 **137**	116 **137**	
			05/10 →	8		119 **865**	119 **865**	
Omega	A		10/86 → 01/94		116 **218**	116 **129**	116 **129**	
			10/86 → 01/94	8		119 **848**	119 **848**	
			10/86 → 01/94		116 **218**	116 **129**	116 **129**	116 **119**
			10/86 → 01/94	8		119 **848**	119 **848**	116 **119**
	B		02/94 → 11/03	– SPOILER –		116 **612**	116 **126**	
			02/94 → 11/03	8		119 **860**	119 **848**	
			02/94 → 11/03	– SPOILER –		116 **612**	116 **126**	116 **119**
			02/94 → 11/03	8		119 **860**	119 **848**	116 **119**
Rekord			08/77 → 09/86		116 **226**	116 **109**	116 **109**	
			08/77 → 09/86	– SPOILER –		116 **602**		
			08/77 → 09/86	8		119 **845**	119 **845**	
			08/77 → 09/86		116 **226**	116 **109**	116 **109**	116 **121**
			08/77 → 09/86	– SPOILER –		116 **602**		
			08/77 → 09/86	8		119 **845**	119 **845**	116 **121**
Senator			06/78 → 01/87		116 **226**	116 **109**	116 **109**	
			06/78 → 01/87	– SPOILER –		116 **602**		
			06/78 → 01/87	8		119 **845**	119 **845**	
			02/87 → 06/93		116 **218**	116 **129**	116 **129**	
			02/87 → 06/93	8		119 **848**	119 **848**	
Signum			05/03 → 11/08	– SPOILER –		116 **619**	116 **126**	
			05/03 → 11/08	8	119 **762**	119 **860**	119 **848**	
Sintra			10/96 →			116 **148**	116 **148**	116 **121**
			10/96 →	8		119 **860**	119 **860**	116 **121**
Tigra			10/94 → 12/03		116 **226**	116 **109**	116 **109**	116 **112**
			10/94 → 12/03	– SPOILER –	116 **301**	116 **602**		
			10/94 → 12/03	8		119 **845**	119 **845**	116 **112**
		Twintop	09/04 →		116 **307**	116 **112**	116 **109**	
		Twintop	09/04 →	8	119 **739**	119 **850**	119 **845**	
Vectra	A	4	09/88 → 08/95			116 **129**	116 **129**	
		5	09/88 → 08/95			116 **129**	116 **129**	116 **129**
	B	4	09/95 → 03/02		116 **218**	116 **126**	116 **126**	
		4	09/95 → 03/02	– SPOILER –		116 **623**		
		4	09/95 → 03/02	8	119 **710**	119 **848**	119 **848**	
		5	09/95 → 03/02		116 **218**	116 **126**	116 **126**	
		5	09/95 → 03/02	– SPOILER –		116 **623**		116 **126**
		5	09/95 → 03/02	8	119 **710**	119 **848**	119 **848**	116 **126**
			11/96 → 11/03		116 **218**	116 **126**	116 **126**	
			11/96 → 11/03	– SPOILER –		116 **623**		116 **119**
			11/96 → 11/03	8	119 **710**	119 **848**	119 **848**	116 **119**
	C	4	04/02 → 12/08			116 **148**	116 **126**	
		4	04/02 → 12/08	– SPOILER –		116 **619**		
		4	04/02 → 12/08	8	119 **762**	119 **860**	119 **848**	
		5	04/02 → 09/05	8	119 **762**	119 **860**	119 **848**	116 **550**
		5	10/05 → 12/08			116 **148**	116 **126**	119 **507**
		5	10/05 → 12/08	– SPOILER –		116 **619**		
		5	10/05 → 12/08	8	119 **762**	119 **860**	119 **848**	119 **507**
			12/03 → 02/09			116 **148**	116 **126**	
			12/03 → 02/09	– SPOILER –		116 **619**		
			12/03 → 02/09	8	119 **762**	119 **860**	119 **848**	

4

Flat Blade OE connections

❶ = ❷ = ❸ = ❹ =

OE Flachwischer Verbindungssysteme

❺ = ❻ = ❼ = ❽ =

For/Für			2 in 3	– SPOILER – HBLADE –				
OPEL (...)								
Vivaro			06/01 → 02/02	– SPOILER –	116 340			116 550
			06/01 → 02/02	8		119 860	119 853	
			03/02 → 06/14	– SPOILER –	116 340			
			03/02 → 06/14	8		119 860	119 853	
			06/01 → 06/14	– SPOILER –	116 340			116 550
			06/01 → 06/14	8		119 860	119 853	
			07/14 →	6	119 431			
			07/14 →	6	119 431			116 550
Zafira	A		03/99 → 06/05		116 337			116 550
			03/99 → 06/05	8	119 781	119 860	119 855	
	B		07/05 →	2	119 399			116 540
	C	Tourer	11/11 →	6	119 457			116 533
PEUGEOT								
104			10/72 → 12/81			116 119	116 119	116 119
			01/82 →			116 121	116 121	116 119
106			09/91 → 08/99		116 307	116 112	116 109	116 121
			09/91 → 08/99	– SPOILER –		116 604		
			09/91 → 08/99	8		119 850	119 845	116 121
			09/99 → 02/04		116 307	116 112	116 109	116 540
			09/99 → 02/04	– SPOILER –		116 604		
			09/99 → 02/04	8		119 850	119 845	116 540
107		x1	06/05 → 05/14			116 137		116 510
			06/05 → 05/14	8		119 865		
108		x1	06/14 →	2		119 334		116 513
204			01/65 → 12/76			116 119	116 119	
205			1983 →		116 226	116 109	116 109	116 109
			1983 →	– SPOILER –		116 602		
			1983 →	8		119 845	119 845	116 109
		Multivan	01/85 →		116 226	116 109	116 109	
			01/85 →	– SPOILER –		116 602		
			01/85 →	8		119 845	119 845	
206		3 5	09/98 → 03/09	– SPOILER –		116 618	116 121	116 540
			09/98 → 03/09	8	119 780	119 865	119 840	116 540
			09/98 → 12/00			116 126	116 137	116 540
			12/00 → 12/09		116 222	116 166	116 166	116 540
			12/00 → 12/09	8		119 855	119 855	116 540
		CC	11/00 → 02/07	– SPOILER –		116 618	116 121	
			11/00 → 02/07	8	119 780	119 865	119 840	
			12/00 → 02/07		116 222	116 166	116 166	
			12/00 → 02/07	8		119 855	119 855	
		SW	06/02 → 07/07	– SPOILER –		116 618	116 121	116 546
			06/02 → 07/07	8	119 780	119 865	119 840	116 546
			10/02 → 07/07		116 222	116 166	116 166	116 546
			10/02 → 07/07	8		119 855	119 855	116 546
206 +		3 5	03/09 → 09/12			116 137	116 121	116 540
			03/09 → 09/12	– SPOILER –		116 618		
			03/09 → 09/12	8	119 780	119 865	119 840	116 540
207		3 5	04/06 → 03/12	1	119 394			116 555
		CC	02/07 → 04/15	1	119 394			
		SW	07/07 → 05/13	1	119 394			116 520
207 +		3 5	09/12 → 08/14	1	119 394			116 555
208		3 5	04/12 →	6	119 265			116 540
301			11/12 →	3	119 330			
304			01/69 → 12/80			116 119	116 119	
305			01/78 → 12/90			116 121	116 121	
			01/78 → 12/90			116 121	116 121	116 121
306		3 5	02/93 → 12/98			116 166	116 112	116 112
			02/93 → 12/98	– SPOILER –		116 606		
			02/93 → 12/98	8	119 742	119 855	119 850	116 112
			01/99 →			116 166	116 112	116 550
			01/99 →	– SPOILER –		116 606		
			01/99 →	8	119 742	119 855	119 850	116 550
		4	02/93 →			116 166	116 112	116 120
			02/93 →	– SPOILER –		116 606		
			02/93 →	8	119 742	119 855	119 850	116 120
			02/93 →			116 166	116 112	

Flat Blade OE connections

❶ = ❷ = ❸ = ❹ =

OE Flachwischer Verbindungssysteme

❺ = ❻ = ❼ = ❽ =

For/Für			2 3	– SPOILER – / – HBLADE –				
PEUGEOT (...)								
306			02/93 →	– SPOILER –		116 606	116 112	
			02/93 →	8	119 742	119 855	119 850	
			03/97 →			116 166	116 112	
			03/97 →	– SPOILER –		116 606		
			03/97 →	8	119 742	119 855	119 850	
307		CC 3 5	05/01 → 09/04	– SPOILER –		116 622	116 618	116 540
			05/01 → 09/04	8	119 785	119 865	119 865	116 540
			10/04 → 09/07	2	119 401			116 540
		CC	07/03 → 03/05	2	119 382			
			04/05 → 12/08	2	119 401			
		SW	04/02 → 09/04	– SPOILER –		116 622	116 618	116 540
			04/02 → 09/04	8	119 785	119 865	119 865	116 540
			10/04 → 04/08	2	119 401			116 540
308		3 5	09/07 → 08/13	6	119 452			116 520
			09/13 →	6	119 298			116 505
		CC	03/09 → 04/15	6	119 452			
		SW	05/08 → 04/14	6	119 452			116 530
		SW	05/08 → 04/14	6	119 452			116 520
		SW	05/14 →	6	119 298			116 516
309			1985 → 06/89		116 226	116 109	116 109	116 109
			1985 → 06/89	– SPOILER –		116 602		
			1985 → 06/89	8		119 845	119 845	116 109
			07/89 →		116 226	116 109	116 109	116 112
			07/89 →	– SPOILER –		116 602		
			07/89 →	8		119 845	119 845	116 112
403			→ 1975			116 116	116 116	
404			→ 1975			116 116	116 116	
405			06/87 → 11/95			116 154	116 154	
			07/88 → 06/89			116 154	116 154	
			07/89 → 11/96			116 154		116 119
406			11/95 → 04/04	8		119 860	119 855	116 109
			11/96 → 04/04	8		119 860	119 855	116 546
407		4	04/04 → 02/11	1	119 389			
			12/05 → 01/12	1	119 389			
		SW	08/04 → 03/11	1	119 389			116 530
504			01/68 → 12/83			116 121	116 121	
			01/68 → 12/83			116 121	116 121	116 121
505			01/79 → 12/93		116 226	116 109	116 109	
			01/79 → 12/93	– SPOILER –		116 602		
			01/79 → 12/93		116 226	116 109	116 109	116 109
			01/79 → 12/93	– SPOILER –		116 602		
508			02/11 →	6	119 281			
			02/11 →	6	119 281			
		SW / RXH	03/11 →	6	119 281			116 520
			03/11 →	6	119 281			116 520
604			01/75 → 12/87		116 226	116 109	116 109	
			01/75 → 12/87	– SPOILER –		116 602		
607			05/00 →			116 131	116 133	
806			06/94 → 04/98			116 137	116 112	116 121
			06/94 → 04/98	8		119 865	119 850	116 121
			05/98 → 05/02	8		119 865		
			06/94 → 05/02	8		119 865	119 850	
807			06/02 → 08/05	– SPOILER –	116 352			116 540
1007			05/05 →			116 148	116 109	116 520
			05/05 →	– SPOILER –	116 346			116 520
			05/05 →	8	119 761	119 860	119 845	
2008			04/13 →	6	119 265			116 530
3008			04/09 → 09/16	6	119 457			116 520
4007			07/07 → 12/12			116 148	116 134	116 515
			07/07 → 12/12	– HBLADE – 8		116 183	116 179	116 515
			07/07 → 12/12	8		119 860	119 853	116 515
			07/07 → 12/12			116 148	116 112	116 515
			07/07 → 12/12	8		119 860	119 850	116 515
4008			05/12 →			116 148	116 134	
			05/12 →	– HBLADE – 8		116 183	116 179	
			05/12 →	8	119 764	119 860	119 853	
			05/12 →			116 148	116 112	

4

Flat Blade OE connections

❶ = ❷ = ❸ = ❹ =

OE Flachwischer Verbindungssysteme

❺ = ❻ = ❼ = ❽ =

For/Für			2	– SPOILER – – HBLADE –				
PEUGEOT (...)								
4008			05/12 →	8		119 **860**	119 **850**	
5008			10/09 → 02/17	6	119 **457**			116 **530**
Bipper			02/08 →	3	119 **408**			115 **715**
Boxer			02/94 → 06/06		116 **222**	116 **166**	116 **166**	
			02/94 → 06/06	– SPOILER –		116 **606**		
			02/94 → 06/06	8		119 **855**	119 **855**	
			07/06 →	6	119 **416**			
Expert	1		10/95 → 12/06			116 **137**	116 **112**	
			10/95 → 12/06	8		119 **865**	119 **850**	
			10/95 → 12/06	8		119 **865**	119 **850**	
	2		01/07 → 05/16			116 **137**	116 **112**	NEW 116 **518**
			01/07 → 05/16	8		119 **865**	119 **850**	NEW 116 **518**
			01/07 → 05/16			116 **137**	116 **112**	116 **540**
			01/07 → 05/16	8		119 **865**	119 **850**	116 **540**
	3		06/16 →	3	NEW 119 **466**			116 **540**
			06/16 →	3	NEW 119 **466**			116 **520**
iOn		x1	01/11 → 12/16	– HBLADE – 8		116 **187**		116 **515**
			01/11 → 12/16	8		119 **865**		
			01/11 → 12/16	8		119 **865**		116 **515**
J5			1982 →		116 **220**	116 **112**	116 **112**	
			1982 →	– SPOILER –		116 **604**		
			1982 →	8		119 **850**	119 **850**	
J7			→ 12/89			116 **122**	116 **122**	
			01/90 →			116 **121**	116 **121**	
J9			→ 12/89			116 **122**	116 **122**	
			01/90 →			116 **121**	116 **121**	
Partner	1 / Origin		06/96 → 12/14		116 **222**	116 **166**	116 **166**	116 **119**
			06/96 → 12/14	– SPOILER –		116 **606**		
			06/96 → 12/14	8		119 **855**	119 **855**	116 **119**
			01/97 → 10/02		116 **222**	116 **166**	116 **166**	116 **121**
			01/97 → 10/02	– SPOILER –		116 **606**		
			01/97 → 10/02	8		119 **855**	119 **855**	116 **121**
			11/02 → 12/14		116 **222**	116 **166**	116 **166**	
			11/02 → 12/14	– SPOILER –		116 **606**		
			11/02 → 12/14	8		119 **855**	119 **855**	
	2		05/08 →	6	119 **429**			116 **540**
RCZ			11/09 →	6	119 **281**			
Traveller			06/16 →	3	NEW 119 **466**			116 **540**
			06/16 →	3	NEW 119 **466**			116 **520**
PGO								
Cevennes			01/13 →			116 **510**	116 **510**	
			01/13 →			116 **510**		
Hemera			01/13 →			116 **510**	116 **510**	
			01/13 →			116 **510**		
PIAGGIO								
Porter / Tipper / Quargo			01/98 →	8		119 **840**	119 **840**	
PORSCHE								
911 / 912			1968 → 1984			116 **119**	116 **119**	
911	(911 Series)		1985 → 02/96			116 **119**	116 **119**	116 **121**
	Carrera 4		1989 → 02/96			116 **121**	116 **121**	116 **121**
	Targa		03/96 → 03/04	– SPOILER –	116 **348**	116 **606**	116 **191**	
	(996 Series)		03/96 → 03/04	– SPOILER –	116 **348**	116 **606**	116 **191**	116 **606**
	(997 Series)		04/04 → 11/11	– SPOILER –	116 **348**	116 **606**	116 **191**	
		Carrera S	01/05 → 08/11	– SPOILER –	116 **348**	116 **606**	116 **191**	
	(991 Series)		09/11 →	6	119 **267**			
		Carrera	12/11 →	6	119 **267**			
			03/12 →	6	119 **267**			
		Targa	05/14 →	6	119 **267**			
914			08/72 → 12/75			116 **119**	116 **119**	
924			02/76 → 07/87		116 **226**	116 **109**	116 **109**	116 **125**
			02/76 → 07/87	– SPOILER –		116 **602**		
			02/76 → 07/87	8		119 **845**	119 **845**	116 **125**
928 / 928S			1977 → 1986		116 **226**	116 **109**	116 **109**	116 **109**
			1977 → 1986	– SPOILER –		116 **602**		
928		S4	1987 →		116 **218**	116 **126**	116 **126**	116 **125**

4

Flat Blade OE connections

❶ = ❷ = ❸ = ❹ =

❺ = ❻ = ❼ = ❽ =

OE Flachwischer Verbindungssysteme

For/Für			2	– SPOILER – – HBLADE –				
PORSCHE (...)								
928		S4	1987 →	– SPOILER –		116 **623**	116 **126**	116 **125**
			1987 →	8		119 **848**	119 **848**	116 **125**
		GTS	1992 →		116 **218**	116 **126**	116 **126**	116 **125**
			1992 →	– SPOILER –		116 **623**		
			1992 →	8		119 **848**	119 **848**	116 **125**
944			10/81 → 12/84		116 **226**	116 **109**	116 **109**	116 **125**
			10/81 → 12/84	– SPOILER –		116 **602**		
			10/81 → 12/84	8		119 **845**	119 **845**	116 **125**
			1988 →		116 **218**	116 **126**	116 **126**	116 **109**
			1988 →	– SPOILER –		116 **623**		
			1988 →	8		119 **848**	119 **848**	116 **109**
Boxster	(986 series)		01/96 → 10/04	– SPOILER –	116 **348**	116 **606**	116 **191**	
			01/96 → 10/04	8		119 **855**	119 **853**	
	(987 series)		11/04 → 04/12	– SPOILER –	116 **348**	116 **606**	116 **191**	
			11/04 → 04/12	8		119 **855**	119 **853**	
	(981 Series)		05/12 → 03/16	6	119 **267**			
718 Boxster	(982 séries)		04/16 →	6	119 **267**			
Cayenne	(955 series)		03/03 → 10/07	1	NEW 119 **436**			
	(957 series)		11/07 → 04/10	1	119 **381**			
	(958 series)		05/10 →	1	119 **381**			NEW 119 **527**
Cayman	(981 Series)		03/13 → 08/16	6	119 **267**			
718 Cayman	(982 séries)		09/16 →	6	119 **267**			
Macan	(95b series)		04/14 →	6	119 **297**			NEW 119 **530**
Panamera V6 / S / 4S / Turbo	(970 series)		10/13 → 10/16	6	119 **462**			NEW 119 **530**
PROTON								
1300...1800			1990 →			116 **125**	116 **125**	
313 / 315			01/94 →		116 **307**	116 **112**	116 **109**	116 **119**
			01/94 →	– SPOILER –		116 **604**		
			01/94 →	8		119 **850**	119 **840**	116 **119**
413...420		4	01/94 →		116 **307**	116 **112**	116 **109**	
			01/94 →	– SPOILER –		116 **604**		
			01/94 →	8		119 **850**	119 **840**	
		5	01/94 →		116 **307**	116 **112**	116 **109**	116 **109**
			01/94 →	– SPOILER –		116 **604**		
			01/94 →	8		119 **850**	119 **840**	116 **109**
Persona Compact		3	11/93 →		116 **307**	116 **112**	116 **109**	116 **119**
			11/93 →	– SPOILER –		116 **604**		
			11/93 →	8		119 **850**	119 **845**	116 **119**
Persona		4	11/93 →		116 **307**	116 **112**	116 **109**	
			11/93 →	– SPOILER –		116 **604**		
			11/93 →	8		119 **850**	119 **845**	
		5	11/93 →		116 **307**	116 **112**	116 **109**	116 **109**
			11/93 →	– SPOILER –		116 **604**		
			11/93 →	8		119 **850**	119 **845**	116 **109**
Saga			01/91 →			116 **125**	116 **129**	
RELIANT								
Metrocab Taxi			01/86 →	8		119 **845**	119 **845**	
RENAULT								
Alpine	1600		1975 → 1978			116 **119**	116 **119**	
	A 110		1971 →			116 **122**	116 **122**	
	A 310		1973 → 1984			116 **121**	116 **121**	116 **121**
	A 610		05/91 →		116 **222**	116 **166**	116 **166**	
	V6		1985 →		116 **222**	116 **166**	116 **166**	
	Le Mans		09/90 →		116 **222**	116 **166**	116 **166**	
Avantime			11/01 →			116 **153**	116 **162**	116 **520**
Captur			04/13 → 06/16	3	119 **269**			116 **530**
Clio	1	3 5	06/90 → 02/94		116 **226**	116 **109**	116 **109**	116 **121**
			06/90 → 02/94	– SPOILER –		116 **602**		
			06/90 → 02/94	8		119 **845**	119 **845**	116 **121**
			03/94 → 02/98		116 **220**	116 **112**	116 **112**	116 **550**
			03/94 → 02/98	– SPOILER –		116 **604**		
			03/94 → 02/98	8		119 **850**	119 **850**	116 **550**
	2	3 5	03/98 → 05/09			116 **134**	116 **109**	116 **520**
			03/98 → 05/09	– SPOILER –		116 **607**		
			03/98 → 05/09	8	119 **725**	119 **853**	119 **845**	116 **520**

4

Flat Blade OE connections

❶ = ❷ = ❸ = ❹ =

OE Flachwischer Verbindungssysteme

❺ = ❻ = ❼ = ❽ =

For/Für			2	– SPOILER – – HBLADE –				
RENAULT (...)								
Clio	2		03/98 → 08/08		116 222	116 134	116 134	116 520
			03/98 → 08/08	– SPOILER –	116 314	116 607		
			03/98 → 08/08	8		119 853	119 853	116 520
		RS	01/00 → 06/06	– SPOILER –		116 607	116 109	116 520
			01/00 → 06/06	8	119 725	119 853	119 845	116 520
		Campus	02/06 → 05/09			116 134	116 109	116 520
			02/06 → 05/09	– SPOILER –		116 607		
			02/06 → 05/09	8	119 725	119 853	119 845	116 520
			06/09 → 08/11	3	119 285			116 520
		Campus	09/11 → 10/12	8		119 850	119 845	116 520
	3		09/05 → 10/14	3	119 330			116 540
		Estate	01/08 → 02/13	3	119 330			116 520
	4		10/12 →	3	119 269			119 520
		Estate	03/13 →	3	119 269			119 520
Espace	1		10/84 → 06/89		116 222	116 166	116 166	116 121
			10/84 → 06/89	– SPOILER –		116 606		
			07/89 → 02/91		116 222	116 166		
			07/89 → 02/91	– SPOILER –		116 606		
			07/89 → 02/91	8		119 855	119 855	116 121
	2		03/91 → 10/96		116 341			116 121
	3		11/96 → 09/02			116 153	116 162	116 550
	4		10/02 → 03/15	1	119 455			116 540
	5		04/15 →	6	119 443			
Estafette			1965 → 1980			116 116	116 116	
Express			10/91 → 1998		116 226	116 109	116 109	
			10/91 → 1998	– SPOILER –		116 602		
			10/91 → 1998	8		119 845	119 845	
			11/91 → 08/94		116 226	116 109	116 109	116 121
			11/91 → 08/94	– SPOILER –		116 602		
			11/91 → 08/94	8		119 845	119 845	116 121
			09/94 →		116 226	116 109	116 109	116 550
			09/94 →	– SPOILER –		116 602		
			09/94 →	8		119 845	119 845	116 550
Fluence			01/10 →	3	119 287			
Fuego			1980 → 1986		116 218	116 126	116 126	116 126
Grand Modus			01/08 → 12/13	1	119 402			116 520
Kadjar			06/15 →			116 137	116 121	
			06/15 →	– HBLADE – 8		116 185	116 174	
			06/15 →	8	119 780	119 865	119 840	
			06/15 →			116 137	116 121	
Kangoo	1 / 1 Express		09/97 →		116 220	116 112	116 112	116 550
			09/97 →	– SPOILER –		116 604		
			09/97 →	8		119 850	119 850	116 550
			09/97 → 06/01		116 220	116 112	116 112	116 120
			09/97 → 06/01	– SPOILER –		116 604		
			09/97 → 06/01	8		119 850	119 850	116 120
			07/01 →		116 220	116 112	116 112	116 119
			07/01 →	8		119 850	119 850	116 119
	2		01/08 →	8	119 293	119 855	119 855	116 546
			01/08 →	3	119 392			116 546
			01/08 →	8	119 293	119 855	119 855	
			01/08 →	3	119 392			
		Express / Compact	01/08 →	8	119 293	119 855	119 855	116 546
		Express / Compact	01/08 →	8	119 293	119 855	119 855	
		Be Bop	11/08 →	8	119 293	119 855	119 855	
Koleos			06/08 → 06/15	2	119 288			
Laguna	1		02/94 → 12/00	– SPOILER –	116 346	116 615	116 109	
			02/94 → 12/00	8		119 860	119 845	
		Nevada	09/95 → 12/00	– SPOILER –	116 346	116 615	116 109	116 547
			09/95 → 12/00	8		119 860	119 845	116 547
	2		01/01 → 09/07	– SPOILER –	116 340			116 570
			01/01 → 09/07	8	119 763	119 860	119 850	
		Estate	01/01 → 12/07	– SPOILER –	116 340			116 540
			01/01 → 12/07	8	119 763	119 860	119 850	
	3		10/07 → 10/15	3	119 420			116 548
			10/08 → 10/15	3	119 420			
		Estate	01/08 → 10/15	3	119 420			116 546

Flat Blade OE connections

❶ = ❷ = ❸ = ❹ =

❺ = ❻ = ❼ = ❽ =

OE Flachwischer Verbindungssysteme

For/Für			2	– SPOILER – HBLADE –				
RENAULT (...)								
Latitude			01/11 → 12/15			116 **148**	116 **121**	
			01/11 → 12/15	❽	119 **760**	119 **860**	119 **840**	
Master	1		03/89 → 10/97			116 **148**	116 **148**	
			03/89 → 10/97	❽		119 **860**	119 **860**	
	2		11/97 → 03/10		116 **341**			
	3		04/10 →			116 **137**	116 **137**	
			04/10 →	❽		119 **865**	119 **865**	
Maxity			2008 →	❽		119 **850**	119 **850**	
Mégane	1		10/95 → 09/02			116 **166**	116 **112**	NEW 116 **548**
			10/95 → 09/02	– SPOILER –		116 **606**		
			10/95 → 09/02	❽	119 **742**	119 **855**	119 **850**	NEW 116 **548**
		Classic	10/96 → 08/03			116 **166**	116 **112**	
			10/96 → 08/03	– SPOILER –		116 **606**		
			10/96 → 08/03	❽	119 **742**	119 **855**	119 **850**	
			10/95 → 09/02			116 **166**	116 **112**	116 **550**
			10/95 → 09/02	– SPOILER –		116 **606**		
			10/95 → 09/02	❽	119 **742**	119 **855**	119 **850**	116 **550**
			03/97 → 08/03			116 **166**	116 **112**	
			03/97 → 08/03	– SPOILER –		116 **606**		
			03/97 → 08/03	❽	119 **742**	119 **855**	119 **850**	
			03/99 → 10/01			116 **166**	116 **112**	116 **119**
			03/99 → 10/01	– SPOILER –		116 **606**		
			03/99 → 10/01	❽	119 **742**	119 **855**	119 **850**	116 **119**
			11/01 → 08/03			116 **166**	116 **112**	116 **540**
			11/01 → 08/03	– SPOILER –		116 **606**		
			11/01 → 08/03	❽	119 **742**	119 **855**	119 **850**	116 **540**
	2	3 5	09/02 → 12/05	– SPOILER –	116 **346**	116 **619**	116 **109**	116 **505**
			09/02 → 12/05	❽	119 **761**	119 **860**	119 **845**	116 **505**
			01/06 → 10/08	❸	119 **332**			116 **505**
		Classic 4	06/03 → 12/05	– SPOILER –	116 **346**	116 **619**	116 **109**	
			06/03 → 12/05	❽	119 **761**	119 **860**	119 **845**	
			01/06 → 12/09	❸	119 **332**			
		CC	06/03 → 12/05	– SPOILER –	116 **346**	116 **619**	116 **109**	
			06/03 → 12/05	❽	119 **761**	119 **860**	119 **845**	
		CC	01/06 → 04/10	❸	119 **332**			
		Estate	06/03 → 12/05	– SPOILER –	116 **346**	116 **619**	116 **109**	116 **500**
			06/03 → 12/05	❽	119 **761**	119 **860**	119 **845**	116 **500**
			01/06 → 05/09	❸	119 **332**			116 **500**
	3	5	11/08 → 12/15	❸	119 **287**			116 **546**
		3	01/09 →	❸	119 **287**			116 **546**
			05/10 → 12/15	❸	119 **287**			
		Estate	06/09 → 08/16	❸	119 **287**			116 **540**
	4	5	01/16 →	❸	119 **332**			
		Estate	09/16 →	❸	119 **332**			
Modus			09/04 → 05/05	❶	119 **402**			116 **500**
			06/05 → 12/13	❶	119 **402**			116 **520**
R 4						116 **116**	116 **116**	
		Fourgonette	→ 1985			116 **116**	116 **116**	
R 5			01/72 → 09/73			116 **119**	116 **119**	
			10/73 → 09/84			116 **119**		116 **119**
R 6			10/68 → 1984			116 **119**	116 **119**	
R 7						116 **119**	116 **119**	
R 9			09/81 → 08/88			116 **121**	116 **121**	
R11			03/83 →			116 **121**	116 **121**	116 **109**
R12			10/69 → 08/83			116 **121**	116 **121**	
R14			08/76 → 03/79			116 **121**	116 **121**	
			04/79 → 06/83			116 **121**		116 **121**
R15			10/71 → 03/79			116 **121**	116 **121**	
			10/71 → 03/79	– SPOILER –		116 **601**		
R16			10/65 → 08/80			116 **119**	116 **119**	
R17			10/71 → 03/79			116 **121**	116 **121**	
			10/71 → 03/79	– SPOILER –		116 **601**		
R18			08/78 → 06/86			116 **121**	116 **121**	
			08/78 → 06/86			116 **121**	116 **121**	116 **121**
R19		3 5	09/88 → 06/89		116 **220**	116 **112**	116 **112**	116 **126**
			09/88 → 06/89	– SPOILER –		116 **604**		
			07/89 →	❽		119 **850**	119 **850**	

4

Flat Blade OE connections

❶ = ❷ = ❸ = ❹ =

OE Flachwischer Verbindungssysteme

❺ = ❻ = ❼ = ❽ =

For/Für			2	– SPOILER – HBLADE –				
RENAULT (...)								
R19		Chamade	06/89 →		116 220	116 112	116 112	
			06/89 →	– SPOILER –		116 604		
			06/89 →	❽		119 850	119 850	
R20			11/75 → 10/83		116 226	116 109	116 109	116 121
			11/75 → 10/83	– SPOILER –		116 602		
R21			01/86 → 06/89		116 220	116 112	116 112	
			01/86 → 06/89	– SPOILER –		116 604		
			07/89 → 03/94		116 220	116 112		
			07/89 → 03/94	– SPOILER –		116 604		
			07/89 → 03/94	❽		119 850	119 850	
			07/89 → 03/94		116 220	116 112	116 112	116 126
			07/89 → 03/94	– SPOILER –		116 604		
			07/89 → 03/94	❽		119 850	119 850	116 126
		Nevada	09/86 → 06/89		116 220	116 112	116 112	116 109
			09/86 → 06/89	– SPOILER –		116 604		
			07/89 → 09/95	❽		119 850	119 850	
R25			03/84 → 04/89		116 222	116 166	116 166	116 166
			03/84 → 04/89	– SPOILER –		116 606		
			05/89 → 03/92		116 222	116 166		
			05/89 → 03/92	– SPOILER –		116 606		
			05/89 → 03/92	❽		119 855	119 855	116 166
R30			10/76 → 12/83		116 226	116 109	116 109	116 109
Rodeo			1961 → 12/92			116 116	116 116	
Safrane			03/92 → 12/98	– SPOILER –		116 616	116 148	116 166
			01/99 →	– SPOILER –		116 619	116 166	116 166
			01/99 →	❽		119 860	119 860	116 166
Saviem	SG					116 121	116 112	
	SM					116 121	116 112	
Scénic	1		10/96 → 05/03			116 148	116 121	116 550
			10/96 → 05/03	❽	119 760	119 860	119 840	116 550
		RX4	03/00 → 12/03			116 148	116 121	116 540
			03/00 → 12/03	❽		119 860	119 840	116 540
	2		05/03 → 12/04	❺	119 380			116 500
			01/05 → 05/09	❸	119 403			
	3		04/09 → 09/16	❸	119 456			116 516
		XMOD	04/13 → 09/16	❸	119 456			116 516
Super 5			10/84 → 07/89		116 226	116 125	116 125	116 122
			08/89 →		116 226	116 109	116 109	116 121
			08/89 →	– SPOILER –		116 602		
			08/89 →	❽		119 845	119 845	116 121
Symbol			03/13 → 02/15			116 166	116 112	
			03/13 → 02/15	❽	119 742	119 855	119 850	
			03/15 →	❸	119 313			
Talisman			12/15 →	❸	119 332			
		Estate	05/16 →	❸	119 332			
Trafic	1		09/80 → 03/89		116 218	116 112	116 126	
			04/89 → 05/01		116 220	116 112	116 112	
			04/89 → 05/01	❽		119 850	119 850	
			06/01 → 06/14	– SPOILER –	116 340			116 550
			06/01 → 06/14	❽		119 860	119 853	
	2		06/01 → 02/02	– SPOILER –	116 340			116 550
			06/01 → 02/02	❽		119 860	119 853	
			03/02 → 06/14	– SPOILER –	116 340			
			03/02 → 06/14	❽		119 860	119 853	
	3		07/14 →	❻	119 431			
			07/14 →	❻	119 431			116 550
Twingo	1	x1	03/93 → 05/07			116 137		116 510
			03/93 → 05/07	❽		119 783		
	2		06/07 → 08/14	❻	119 378			116 520
	3		09/14 → 03/16	❸	119 304			116 516
			04/16 →	❸	119 304			116 546
Van F4-F6			→ 1985			116 116	116 116	
Wind			09/10 → 12/14	❻	119 378			
Zoé			12/12 →	❻	119 290			116 530
ROVER								
1800...3500			→ 1975			116 119	116 119	

Flat Blade OE connections

❶ = ❷ = ❸ = ❹ =

❺ = ❻ = ❼ = ❽ =

OE Flachwischer Verbindungssysteme

For/Für			2	– SPOILER – HBLADE –				
▶ ROVER (...)								
2000...3500			01/76 →			116 **125**	116 **125**	
			01/76 →			116 **125**	116 **125**	
3500Vit / Vanden Plas					116 **226**	116 **109**	116 **109**	
Rover 25			01/00 → 08/04		116 **226**	116 **109**	116 **109**	116 **109**
			01/00 → 08/04	– SPOILER –		116 **602**		
			01/00 → 08/04	❽		119 **845**	119 **845**	116 **109**
			09/04 →	– SPOILER –		116 **602**	116 **109**	116 **550**
			09/04 →	❽		119 **845**	119 **845**	116 **550**
Rover 45			01/00 →		116 **307**	116 **112**	116 **109**	116 **109**
			01/00 →	– SPOILER –		116 **604**		
			01/00 →	❽		119 **850**	119 **845**	116 **109**
Rover 75			03/99 →		116 **222**	116 **166**	116 **166**	
			03/99 →	– SPOILER –		116 **606**		
			03/99 →	❽	119 **293**	119 **855**	119 **855**	
		Tourer	09/01 →		116 **222**	116 **166**	116 **166**	
			09/01 →	– SPOILER –		116 **606**		
			09/01 →	❽	119 **293**	119 **855**	119 **855**	
100-Series			09/90 →			116 **121**	116 **121**	116 **121**
			09/90 →	– SPOILER –		116 **601**		
200-Series			06/84 → 09/89		116 **226**	116 **109**	116 **109**	
			06/84 → 09/89	– SPOILER –		116 **602**		
			06/84 → 09/89	❽		119 **845**	119 **845**	
			10/89 →		116 **226**	116 **109**	116 **109**	116 **109**
			10/89 →	– SPOILER –		116 **602**		
			10/89 →	❽		119 **845**	119 **845**	116 **109**
			10/92 →		116 **226**	116 **109**	116 **109**	116 **112**
			10/92 →	– SPOILER –		116 **602**		
			10/92 →	❽		119 **845**	119 **845**	116 **112**
			03/92 →		116 **226**	116 **109**	116 **109**	
			03/92 →	– SPOILER –		116 **602**		
			03/92 →	❽		119 **845**	119 **845**	
400-Series			03/90 → 08/95		116 **226**	116 **109**	116 **109**	
			03/90 → 08/95	– SPOILER –		116 **602**		
			03/90 → 08/95	❽		119 **845**	119 **845**	
		4	09/95 →		116 **307**	116 **112**	116 **109**	
			09/95 →	– SPOILER –		116 **604**		
			09/95 →	❽		119 **850**	119 **845**	
		5	09/95 →		116 **307**	116 **112**	116 **109**	116 **109**
			09/95 →	– SPOILER –		116 **604**		
			09/95 →	❽		119 **845**	119 **845**	116 **109**
		Tourer	05/93 →		116 **226**	116 **109**	116 **109**	
			05/93 →	❽		119 **845**	119 **845**	
600-Series			04/93 →			116 **166**	116 **112**	
			04/93 →	– SPOILER –		116 **606**		
			04/93 →	❽		119 **855**	119 **850**	
800-Series		4	06/86 → 12/91		116 **218**	116 **126**	116 **126**	
			06/86 → 12/91	– SPOILER –		116 **623**		
			06/86 → 12/91	❽		119 **848**	119 **848**	
		5	06/86 → 12/91		116 **218**	116 **126**	116 **126**	116 **126**
			06/86 → 12/91	– SPOILER –		116 **623**		
			06/86 → 12/91	❽		119 **848**	119 **848**	116 **126**
			01/92 →		116 **220**	116 **112**	116 **112**	
			01/92 →	– SPOILER –		116 **604**		
			01/92 →	❽		119 **850**	119 **850**	
			01/92 → 07/95		116 **220**	116 **112**	116 **112**	
			01/92 → 07/95	– SPOILER –		116 **604**		
			01/92 → 07/95	❽		119 **850**	119 **850**	
SD1 Series			01/76 → 12/87			116 **125**	116 **125**	
Streetwise		3 5	08/03 → 10/05		116 **226**	116 **109**	116 **109**	116 **109**
			08/03 → 10/05	– SPOILER –		116 **602**		
			08/03 → 10/05	❽		119 **845**	119 **845**	116 **109**
▶ ROVER / MG								
MG			03/96 →		116 **220**	116 **112**	116 **112**	
			03/96 →	– SPOILER –		116 **604**		
			03/96 →	❽		119 **850**	119 **850**	
MGF/ TF			03/96 →		116 **220**	116 **112**	116 **112**	

Flat Blade OE connections

❶ = ❷ = ❸ = ❹ =

OE Flachwischer Verbindungssysteme

❺ = ❻ = ❼ = ❽ =

For/Für			2	– SPOILER – HBLADE –				
ROVER / MG (...)								
MGF/ TF			03/96 →	– SPOILER –		116 **604**	116 **112**	
			03/96 →	8		119 **850**	119 **850**	
ZR			09/01 → 08/04		116 **226**	116 **109**	116 **109**	116 **109**
			09/01 → 08/04	– SPOILER –	116 **301**	116 **602**		
			09/01 → 08/04	8		119 **845**	119 **845**	116 **109**
			09/04 →		116 **226**	116 **109**	116 **109**	116 **550**
			09/04 →	– SPOILER –		116 **602**		
			09/04 →	8		119 **845**	119 **845**	116 **550**
ZS			09/01 →		116 **307**	116 **112**	116 **109**	
			09/01 →	8		119 **850**	119 **845**	
ZT			09/01 →		116 **222**	116 **166**	116 **166**	
			09/01 →	– SPOILER –		116 **606**		
			09/01 →	8	119 **293**	119 **855**	119 **855**	
		Tourer	09/01 →		116 **222**	116 **166**	116 **166**	
			09/01 →	– SPOILER –		116 **606**		
			09/01 →	8	119 **293**	119 **855**	119 **855**	
SAAB								
90			01/84 → 12/87			116 **121**	116 **121**	
			01/84 → 12/87	– SPOILER –		116 **601**		
			01/84 → 12/87	8		119 **840**	119 **840**	
99			08/74 → 01/85			116 **120**	116 **120**	
900			10/80 → 06/93			116 **121**	116 **121**	
			10/80 → 06/93	– SPOILER –		116 **601**		
			10/80 → 06/93	8		119 **840**	119 **840**	
			07/93 → 08/02		116 **220**	116 **134**	116 **112**	116 **112**
			07/93 → 08/02	– SPOILER –	116 **313**	116 **607**		
			07/93 → 08/02	8	119 **727**	119 **853**	119 **853**	116 **112**
			07/94 → 08/02		116 **222**	116 **134**	116 **134**	
			07/94 → 08/02	– SPOILER –	116 **314**	116 **607**		
			07/94 → 08/02	8		119 **853**	119 **853**	
			04/86 → 06/94			116 **121**	116 **121**	
			04/86 → 06/94	– SPOILER –		116 **601**		
			04/86 → 06/94	8		119 **840**	119 **840**	
			07/94 → 08/02		116 **220**	116 **134**	116 **112**	
			07/94 → 08/02	– SPOILER –	116 **313**	116 **607**		
			07/94 → 08/02	8		119 **853**	119 **853**	
9000			09/84 → 12/89			116 **121**	116 **121**	
		4	01/89 →		116 **222**	116 **134**	116 **134**	
			01/89 →	– SPOILER –	116 **314**	116 **607**		
			01/89 →	8		119 **853**	119 **853**	
		5	01/89 →		116 **222**	116 **134**	116 **134**	116 **112**
			01/89 →	– SPOILER –	116 **314**	116 **607**		
			01/89 →	8		119 **853**	119 **853**	116 **112**
		Aero	01/89 →		116 **222**	116 **134**	116 **134**	116 **134**
			01/89 →	– SPOILER –	116 **314**	116 **607**		
			01/89 →	8		119 **853**	119 **853**	116 **134**
9.3			02/98 → 08/02		116 **220**	116 **134**	116 **112**	116 **112**
			02/98 → 08/02	– SPOILER –	116 **313**	116 **607**		
			02/98 → 08/02	8	119 **727**	119 **853**	119 **853**	116 **112**
		Aero	09/02 → 08/07		116 **222**	116 **166**	116 **166**	
			09/02 → 08/07	– SPOILER –		116 **606**		
			10/07 →	2	119 **308**			
		Sport Combi	09/05 → 08/07	– SPOILER –		116 **606**	116 **141**	116 **516**
		Sport-Hatch	10/07 →	2	119 **308**			116 **516**
9.5			09/97 → 08/07	– SPOILER –	116 **304**	116 **612**	116 **148**	
			09/97 → 08/07	8		119 **855**	119 **855**	
			09/07 → 12/09	3	119 **424**			
			10/98 → 08/07	– SPOILER –	116 **304**	116 **612**	116 **148**	
			10/98 → 08/07	8		119 **855**	119 **855**	
		Estate	09/07 → 03/10	3	119 **424**			
9.7 X			09/06 →	8		119 **855**	119 **855**	
SANTANA								
Vitara			09/89 → 1991			116 **124**	116 **124**	
			1991 → 1994			116 **124**		116 **120**
		2 3	1995 →		116 **226**	116 **109**	116 **109**	116 **119**
			1995 →	8		119 **845**	119 **845**	116 **119**

Flat Blade OE connections

❶ = ❷ = ❸ = ❹ =

OE Flachwischer Verbindungssysteme

❺ = ❻ = ❼ = ❽ =

For/Für			2	– SPOILER – – HBLADE –				
SANTANA (...)								
Vitara		5	1995 →			116 **124**	116 **124**	116 **120**
SEAT								
124			01/67 → 12/76			116 **119**	116 **119**	
			01/67 → 12/76			116 **119**	116 **119**	
127			03/71 → 09/81			116 **119**	116 **119**	
128						116 **119**	116 **119**	
131			05/74 → 12/80			116 **119**	116 **119**	
			01/81 → 12/84			116 **121**	116 **121**	
			01/81 → 12/84	– SPOILER –		116 **601**		
132			03/73 → 06/82			116 **120**	116 **120**	
133			05/74 → 01/80			116 **120**	116 **120**	
600			01/66 → 12/74			116 **116**	116 **116**	
850			01/68 → 12/73			116 **116**	116 **116**	
1400			01/65 → 12/67			116 **119**	116 **119**	
1430			01/65 → 12/67			116 **119**	116 **119**	
1500			01/65 → 12/67			116 **119**	116 **119**	
1600			01/79 → 12/85			116 **119**	116 **119**	
1800			01/79 → 12/85			116 **119**	116 **119**	
2000			01/79 → 12/85			116 **119**	116 **119**	
Alhambra	1		03/96 → 05/01		116 **336**			116 **121**
			06/01 → 08/10	1	119 **383**			
	2		09/10 →	6	119 **441**			119 **518**
Altea			04/04 → 12/08		NEW 119 **440**			116 **119**
			01/09 → 12/15		NEW 119 **440**			119 **504**
	XL / Freetrack		10/06 → 12/15		NEW 119 **440**			116 **116**
Arosa			03/97 → 02/99	– SPOILER –		116 **623**	116 **192**	116 **116**
			03/97 → 02/99	8		119 **848**	119 **845**	116 **116**
			03/99 →	– SPOILER –	116 **351**	116 **607**	116 **192**	116 **116**
			03/99 →	8		119 **853**	119 **845**	116 **116**
Cordoba	1 / 2		11/93 → 09/99			116 **134**	116 **109**	
			11/93 → 09/99	– SPOILER –		116 **607**		
			11/93 → 09/99	8		119 **853**	119 **845**	
	2	Vario	09/97 → 09/99			116 **134**	116 **109**	
			09/97 → 09/99	– SPOILER –		116 **607**		
			09/97 → 09/99	8		119 **853**	119 **845**	
	3		10/99 → 02/02	– SPOILER –		116 **607**	116 **109**	
			10/99 → 02/02	8		119 **853**	119 **845**	
		Vario	10/99 → 03/02	– SPOILER –		116 **607**	116 **109**	116 **116**
			10/99 → 03/02	8		119 **853**	119 **845**	116 **116**
	4		03/02 → 03/06	– SPOILER –	116 **311**	116 **607**	116 **126**	
			03/02 → 03/06	8	119 **725**	119 **853**	119 **845**	
	5		04/06 → 12/09	6	119 **301**			
Exeo		4	03/09 → 09/13	4	119 **323**			
			03/09 → 09/13	4	119 **370**			
		ST	06/09 → 09/13	4	119 **323**			119 **504**
			06/09 → 09/13	4	119 **370**			119 **504**
Fura		x1	01/82 → 12/85			116 **121**		116 **120**
Ibiza		x1	08/84 → 11/89			116 **109**		116 **109**
			08/84 → 11/89	8		119 **845**		
			11/89 → 02/93			116 **112**		
			11/89 → 02/93	8		119 **848**		
			03/93 → 09/99			116 **134**	116 **109**	116 **119**
			03/93 → 09/99	– SPOILER –		116 **607**		
			03/93 → 09/99	8		119 **853**	119 **845**	116 **119**
			10/99 → 02/02	– SPOILER –		116 **607**	116 **109**	116 **119**
			10/99 → 02/02	8		119 **853**	119 **845**	116 **119**
			03/02 → 03/06	– SPOILER –	116 **311**	116 **607**	116 **126**	116 **119**
			03/02 → 03/06	8	119 **725**	119 **853**	119 **845**	116 **119**
			04/06 → 05/08	6	119 **301**			116 **119**
		Collector	05/08 → 12/09	6	119 **301**			116 **119**
		SC 3 5	06/08 → 03/12	6	119 **378**			116 **119**
			04/12 →	6	119 **378**			119 **504**
		ST	06/10 → 03/12	6	119 **378**			116 **119**
			04/12 →	6	119 **378**			119 **504**
Inca			07/95 →			116 **134**	116 **109**	116 **109**
			07/95 →	– SPOILER –		116 **607**		

4

Flat Blade OE connections

1 = 2 = 3 = 4 =

OE Flachwischer Verbindungssysteme

5 = 6 = 7 = 8 =

For/Für			2 in 1	– SPOILER – – HBLADE –	+			
SEAT (...)								
Inca			07/95 →	8		119 **853**	119 **845**	116 **109**
Leon	1		03/00 → 04/06	– SPOILER –	116 **351**	116 **607**	116 **192**	
			03/00 → 04/06	8	119 **725**	119 **853**	119 **845**	
	2		09/05 → 04/09	2	119 **404**			116 **116**
			05/09 → 12/12	2	119 **404**			119 **515**
	3	5	01/13 →	6	119 **271**			119 **518**
		SC 5	05/13 →	6	119 **271**			
		ST	01/14 →	6	119 **271**			119 **518**
		ST X-Perience	01/15 →	6	119 **271**			119 **518**
Malaga			05/85 →			116 **121**	116 **121**	
			05/85 →	– SPOILER –		116 **601**		
			05/85 →	8		119 **840**	119 **840**	
Marbella		x1	01/82 →			116 **121**		116 **119**
			01/82 →	8		119 **840**		
Mii			04/12 →	6	119 **260**			119 **516**
Panda			01/82 → 12/85			116 **121**	116 **121**	
Ronda			06/82 → 06/87			116 **121**	116 **121**	116 **120**
			06/82 → 06/87	– SPOILER –		116 **601**		
Terra		x1	02/87 → 06/95			116 **121**		
Toledo	1		02/91 → 02/99		116 **220**	116 **112**	116 **112**	
			02/91 → 02/99	– SPOILER –		116 **604**		
			02/91 → 02/99	8		119 **850**	119 **850**	
	2		03/99 → 09/04	– SPOILER –	116 **351**	116 **607**	116 **192**	
			03/99 → 09/04	8	119 **725**	119 **853**	119 **845**	
	3		10/04 → 12/09		NEW 119 **440**			116 **116**
	4		09/12 →	6	119 **260**			119 **525**
SKODA								
Citigo			05/12 →	6	119 **260**			119 **516**
Exellent			01/92 →		116 **226**	116 **109**	116 **109**	116 **121**
			01/92 →	– SPOILER –		116 **602**		
			01/92 →	8		119 **845**	119 **845**	116 **121**
Fabia	1	5	05/00 → 04/07	– SPOILER –	116 **351**	116 **607**	116 **192**	
			05/00 → 04/07	8		119 **853**	119 **848**	
		Sedan 4	06/01 → 04/07	– SPOILER –	116 **351**	116 **607**	116 **192**	
			06/01 → 04/07	8		119 **853**	119 **848**	
		Combi	12/00 → 12/07	– SPOILER –	116 **351**	116 **607**	116 **192**	
			12/00 → 12/07	8		119 **853**	119 **848**	
	2	5	05/07 → 08/13	6	119 **303**			119 **515**
			09/13 → 10/14	6	119 **303**			119 **514**
		Combi / Scout	01/08 → 12/14	6	119 **303**			119 **502**
	3	5	11/14 →		119 **314**			119 **518**
		Combi	01/15 →		119 **314**			119 **525**
Favorit			03/88 →		116 **226**	116 **109**	116 **109**	116 **121**
			03/88 →	– SPOILER –		116 **602**		
			03/88 →	8		119 **845**	119 **845**	116 **121**
	Combi		11/90 →		116 **226**	116 **109**	116 **109**	116 **121**
			11/90 →	– SPOILER –		116 **602**		
			11/90 →	8		119 **845**	119 **845**	116 **121**
Felicia			02/95 →		116 **220**	116 **112**	116 **112**	116 **122**
			02/95 →	– SPOILER –		116 **604**		
			02/95 →	8		119 **850**	119 **850**	116 **122**
	Combi		02/95 →		116 **220**	116 **112**	116 **112**	116 **121**
			02/95 →	– SPOILER –		116 **604**		
			02/95 →	8		119 **850**	119 **850**	116 **121**
	Fun		01/97 →		116 **220**	116 **112**	116 **112**	
			01/97 →	– SPOILER –		116 **604**		
			01/97 →	8		119 **850**	119 **850**	
Forman			11/90 →		116 **220**	116 **112**	116 **112**	116 **121**
			11/90 →	– SPOILER –		116 **604**		
			11/90 →	8		119 **850**	119 **850**	116 **121**
Octavia	1		10/96 → 09/00	– SPOILER –	116 **351**	116 **607**	116 **192**	
			10/96 → 09/00	8		119 **853**	119 **845**	
		5	10/00 →	– SPOILER –	116 **351**	116 **607**	116 **192**	
			10/00 →	8		119 **853**	119 **845**	
		Combi	03/98 → 01/05	– SPOILER –	116 **351**	116 **607**	116 **192**	116 **119**
			03/98 → 01/05	8		119 **853**	119 **845**	116 **119**

Flat Blade OE connections

❶ = ❷ = ❸ = ❹ =

❺ = ❻ = ❼ = ❽ =

OE Flachwischer Verbindungssysteme

For/Für			2 / 3	– SPOILER – / – HBLADE –				
SKODA (...)								
Octavia	2		06/04 → 02/13	❶	119 **355**			119 **502**
		Combi / Scout	02/05 → 05/13	❶	119 **355**			119 **502**
	3		03/13 →	❻	119 **270**			119 **525**
		Combi / Scout	06/13 →	❻	119 **270**			119 **518**
Pick-up			01/96 →		116 **220**	116 **112**	116 **112**	
			01/96 →	– SPOILER –		116 **604**		
			01/96 →	❽		119 **850**	119 **850**	
Praktik			06/07 →	❻	119 **303**			119 **504**
Rapid			11/12 →	❻	119 **260**			119 **525**
Rapid Spaceback			10/13 →	❻	119 **260**			119 **525**
Roomster			07/06 →	❻	119 **303**			119 **504**
S100			1965 → 1978			116 **116**	116 **116**	
S105			09/76 → 12/90			116 **122**	116 **121**	
S110			1970 → 1979			116 **116**	116 **116**	
S120			09/76 →			116 **122**	116 **121**	
			08/81 →			116 **121**	116 **121**	
S125			01/76 → 12/90			116 **121**	116 **121**	
S130			09/84 →			116 **121**	116 **121**	
			09/84 →			116 **121**	116 **121**	
S135 / S136 / Rapid / Gard			01/76 → 12/90			116 **122**	116 **121**	
Superb	1		04/02 → 01/05	❶	119 **321**			
			04/02 → 01/05	❶	119 **326**			
			01/05 → 08/08	– SPOILER –	116 **366**	116 **607**	116 **136**	
			01/05 → 08/08	❽	119 **786**	119 **853**	119 **850**	
	2		09/08 → 06/15	❻	119 **298**			
		Combi	01/10 → 10/15	❻	119 **298**			119 **525**
	3		07/15 →	❻	119 **272**			
		Combi	11/15 →	❻	119 **272**			119 **525**
Yeti			09/09 →	❻	119 **305**			119 **514**
SMART (MCC)								
Fortwo			03/98 → 03/07		116 **222**	116 **134**	116 **134**	116 **119**
			03/00 → 03/07		116 **222**	116 **134**	116 **134**	
			03/07 → 10/14	❷	119 **387**			116 **500**
			03/07 → 10/14	❷	119 **387**			116 **500**
			03/07 → 10/14	❷	119 **387**			
			03/07 → 10/14	❷	119 **387**			
			11/14 →	❸	119 **304**			
			02/16 →	❸	119 **304**			
Forfour			05/04 → 12/06			116 **148**	116 **109**	116 **546**
			05/04 → 12/06	❽		119 **865**	119 **845**	116 **546**
			11/14 →	❸	119 **304**			
Roadster			04/03 → 01/06		116 **307**	116 **112**	116 **109**	
			04/03 → 01/06	– SPOILER –		116 **604**		
			04/03 → 01/06	❽		119 **850**	119 **845**	
SSANG-YONG								
Actyon / Pick Up Sport / SUT-1			12/06 →	❽		119 **855**	119 **848**	
Cayenne	1		10/05 → 09/07	❽		119 **855**	119 **848**	
Family			1993 →			116 **121**	116 **121**	
			1993 →	❽		119 **840**	119 **840**	
Instance			10/95 →		116 **220**	116 **112**	116 **112**	116 **121**
			10/95 →	❽		119 **850**	119 **850**	116 **121**
Korando	1		01/94 → 09/96		116 **226**	116 **109**	116 **109**	
	2		10/96 → 12/08		116 **226**	116 **109**	116 **109**	
			10/96 → 12/08	– SPOILER –		116 **602**		
			10/96 → 12/08	❽		119 **845**	119 **845**	
	3		01/11 →			116 **148**	116 **121**	116 **533**
			01/11 →	– HBLADE – ❽		116 **183**	116 **174**	116 **533**
			01/11 →	❽	119 **760**	119 **860**	119 **840**	116 **533**
Kyron	2		10/07 →			116 **166**	116 **126**	
			10/07 →	❽		119 **855**	119 **848**	
Musso			10/94 →		116 **307**	116 **112**	116 **109**	116 **119**
			10/94 →	❽		119 **850**	119 **845**	116 **119**
Rexton / RX290			09/03 →		116 **220**	116 **112**	116 **112**	116 **119**
			09/03 →	❽		119 **850**	119 **850**	116 **119**
Rodius			12/04 → 02/13			116 **148**	116 **109**	
			12/04 → 02/13	❽		119 **860**	119 **845**	

Flat Blade OE connections

❶ = ❷ = ❸ = ❹ =

OE Flachwischer Verbindungssysteme

❺ = ❻ = ❼ = ❽ =

For/Für				– SPOILER – / – HBLADE –				
SSANG-YONG (...)								
Rodius 2 / Korando Turismo / Stavic			03/13 →	8		119 860	119 845	116 514
			03/13 →	8		119 860	119 845	116 514
SUBARU								
1200						116 119	116 119	
1300			1979 → 1987			116 121	116 121	
1400			1972 → 1977			116 119	116 119	
			1977 → 1979			116 120	116 120	
1600			03/84 →			116 120	116 120	116 121
1800		4	01/84 → 12/91			116 125	116 125	
			01/84 → 12/91			116 125	116 125	116 112
			01/84 → 12/91			116 121	116 121	116 120
			01/84 → 12/91			116 122	116 122	116 120
		Station 4WD	01/84 → 12/91			116 125	116 125	116 121
		Station 4WD	01/84 → 12/91			116 125	116 125	116 121
BRZ			08/12 →			116 166	116 112	
			08/12 →	– HBLADE – 8		116 180	116 178	
			08/12 →	8	119 742			
Domingo			11/93 →			116 121	116 121	116 121
E + Wagon / Wagon SDX			1994 →			116 121	116 121	
			1994 →	8		119 840	119 840	
Forester	(SF)		09/97 → 01/02		116 310	116 134	116 126	116 119
			09/97 → 01/02	– SPOILER –	116 311	116 607		
			09/97 → 01/02	8		119 853	119 848	116 119
	(SG)		01/05 → 03/08			116 166	116 126	116 531
			01/05 → 03/08	8		119 855	119 848	116 531
			02/02 → 12/04			116 166	116 126	116 120
			02/02 → 12/04	8		119 855	119 848	116 120
	(SH)		04/08 → 01/13			116 148	116 109	116 531
			04/08 → 01/13	– HBLADE – 8		116 183	116 176	116 531
			04/08 → 01/13	8		119 860	119 845	116 531
			04/08 → 01/13			116 148	116 109	116 531
			04/08 → 01/13	8		119 860	119 845	116 531
	(SJ)		02/13 →			116 137	116 124	116 531
			02/13 →	– HBLADE – 8		116 185	116 174	116 531
			02/13 →	8	119 780	119 865	119 840	116 531
			02/13 →			116 137	116 124	116 531
			02/13 →	8		119 865	119 840	116 531
Impreza		4	01/93 → 09/01			116 134	116 109	
			01/93 → 09/01	8		119 853	119 845	
			10/01 → 09/07			116 166	116 121	
			10/01 → 09/07	– SPOILER –		116 606		
			10/01 → 09/07	8		119 855	119 840	
Impreza / WRX		4	10/10 → 04/14			116 148	116 121	
			10/10 → 04/14	– HBLADE – 8		116 183	116 174	
			10/10 → 04/14	8		119 860	119 840	
			10/10 → 04/14			116 148	116 121	
			10/10 → 04/14	8		119 860	119 840	
Impreza / WRX / STI		5	10/07 → 04/14			116 148	116 121	116 531
			10/07 → 04/14	– HBLADE – 8		116 183	116 174	116 531
			10/07 → 04/14	8		119 860	119 840	116 531
			10/07 → 04/14			116 148	116 121	116 531
			10/07 → 04/14	8		119 860	119 840	116 531
Impreza			01/93 → 09/01			116 134	116 109	116 120
			01/93 → 09/01	8		119 853	119 845	116 120
			10/01 → 12/04			116 166	116 121	116 121
			10/01 → 12/04	– SPOILER –		116 606		
			10/01 → 12/04	8		119 855	119 840	116 121
			01/05 → 12/07			116 166	116 121	116 531
			01/05 → 12/07	– SPOILER –		116 606		
			01/05 → 12/07	8		119 855	119 840	116 531
Justy			02/84 → 1989			116 121	116 121	116 121
			02/84 → 1989			116 122	116 122	116 121
			1990 → 03/96			116 109	116 121	116 121
			1990 → 03/96	8		119 845	119 840	116 121
			04/96 → 09/03			116 134	116 109	116 120
			04/96 → 09/03	8		119 853	119 845	116 120

Flat Blade OE connections

❶ = ❷ = ❸ = ❹ =

❺ = ❻ = ❼ = ❽ =

OE Flachwischer Verbindungssysteme

For/Für			2	– SPOILER – – HBLADE –				
SUBARU (...)								
Justy	G3X		10/03 → 09/07		116 **226**	116 **126**	116 **109**	
			10/03 → 09/07	– SPOILER –		116 **623**		
			10/03 → 09/07	8		119 **848**	119 **845**	
			09/07 → 03/11	8		119 **850**	119 **840**	
Legacy	1		08/89 → 09/93		116 **307**	116 **112**	116 **109**	
			08/89 → 09/93	– SPOILER –		116 **604**		
			08/89 → 09/93	8		119 **850**	119 **845**	
			08/89 → 09/93		116 **307**	116 **112**	116 **109**	116 **121**
			08/89 → 09/93	8		119 **850**	119 **845**	116 **121**
	2		10/93 → 02/99		116 **310**	116 **134**	116 **126**	
			10/93 → 02/99	8		119 **853**	119 **848**	
			10/93 → 02/99		116 **310**	116 **134**	116 **126**	116 **120**
			10/93 → 02/99	8		119 **853**	119 **848**	116 **120**
	3		03/99 → 08/04			116 **166**	116 **112**	
			03/99 → 08/04	– SPOILER –		116 **606**		
			03/99 → 08/04	8		119 **855**	119 **850**	
			03/99 → 08/04			116 **166**	116 **112**	116 **120**
			03/99 → 08/04	– SPOILER –		116 **606**		
			03/99 → 08/04	8		119 **855**	119 **850**	116 **120**
	4		09/04 → 03/10			116 **148**	116 **109**	
			09/04 → 03/10	8		119 **860**	119 **845**	
	5		09/10 → 12/14	8		119 **865**	119 **845**	
			09/10 → 12/14	8		119 **865**	119 **845**	
			09/10 → 12/14	8		119 **865**	119 **845**	116 **531**
			09/10 → 12/14	8		119 **865**	119 **845**	116 **531**
	Outback		10/96 → 08/04		116 **310**	116 **134**	116 **126**	116 **119**
			10/96 → 08/04	8		119 **853**	119 **848**	116 **119**
			09/04 → 09/09			116 **148**	116 **109**	116 **531**
			09/04 → 09/09	8		119 **860**	119 **845**	116 **531**
	Outback 4		04/10 → 12/14	8		119 **865**	119 **845**	116 **531**
			04/10 → 12/14	8		119 **865**	119 **845**	116 **531**
Leone			→ 1979			116 **119**	116 **119**	
			1980 → 1989			116 **125**	116 **125**	
Levorg			10/15 →			116 **137**	116 **121**	116 **531**
			10/15 →			116 **137**	116 **121**	116 **531**
Libero			1983 → 1989			116 **122**	116 **122**	
			1990 → 08/94			116 **120**	116 **120**	
	(E12) / Vanille		09/94 →			116 **121**	116 **121**	116 **120**
			09/94 →	8		119 **840**	119 **840**	116 **120**
Minijumbo			1983 → 07/89			116 **121**	116 **121**	
			08/89 →			116 **125**	116 **120**	
Minivan			1986 →			116 **119**	116 **119**	
Outback			12/00 → 08/04			116 **166**	116 **112**	116 **120**
			12/00 → 08/04	8		119 **855**	119 **850**	116 **120**
	5		02/15 →			116 **137**	116 **124**	116 **532**
			02/15 →	– HBLADE – 8		116 **185**	116 **174**	116 **532**
			02/15 →	8	119 **780**	119 **865**	119 **840**	116 **532**
			02/15 →			116 **137**	116 **124**	116 **532**
			02/15 →	8		119 **865**	119 **840**	116 **532**
Rex			1981 → 1987			116 **121**	116 **121**	
			1988 →			116 **125**	116 **120**	
Sumo			1990 →			116 **119**	116 **119**	
SVX			1992 → 1997			116 **166**	116 **112**	
			1992 → 1997	– SPOILER –		116 **606**		
			1992 → 1997	8		119 **855**	119 **850**	
Trendy			1984 → 1989			116 **120**	116 **120**	116 **122**
			1990 → 1991		116 **226**	116 **109**	116 **109**	116 **124**
			1990 → 1991	8		119 **845**	119 **845**	116 **124**
			1991 →			116 **109**	116 **121**	116 **121**
Trezia			04/11 →	– HBLADE – 8		116 **187**		116 **513**
Van E10			1986 →			116 **119**	116 **119**	
Vivio			03/92 →			116 **126**	116 **120**	116 **119**
			03/92 →	– SPOILER –		116 **623**		
			03/92 →	8		119 **848**	119 **838**	116 **119**
WRX STI		4	05/14 →			116 **137**	116 **121**	
		4	05/14 →			116 **137**	116 **121**	
XV		5	12/11 →	– HBLADE – 8		116 **185**	116 **174**	

4

Flat Blade OE connections

❶ = ❷ = ❸ = ❹ =

❺ = ❻ = ❼ = ❽ =

OE Flachwischer Verbindungssysteme

For/Für			2+3	– SPOILER – – HBLADE –	1+4	1	4	
▶ SUBARU (...)								
XV		5	12/11 →	8		119 865	119 840	
			12/11 →	8		119 865	119 840	
▶ SUZUKI								
1300			1989 →			116 112	116 121	116 121
			1989 →	8		119 850	119 840	116 121
Alto			10/80 → 09/83			116 122	116 122	
			10/83 → 09/85			116 119	116 119	
			10/85 → 12/95			116 125	116 125	
		3 5	01/96 → 08/04			116 126	116 121	116 119
			01/96 → 08/04	– SPOILER –		116 623		
			01/96 → 08/04	8		119 848	119 840	116 119
			09/04 → 06/06			116 109	116 121	
			09/04 → 06/06	8		119 845	119 840	
			01/09 → 12/15			116 134	116 119	
			01/09 → 12/15	8		119 853	119 835	
Baleno		3	04/95 → 2002		116 307	116 112	116 109	116 119
			04/95 → 2002	– SPOILER –		116 604		
			04/95 → 2002	8		119 850	119 845	116 119
		4	04/95 → 2002		116 307	116 112	116 109	
			04/95 → 2002	– SPOILER –		116 604		
			04/95 → 2002	8		119 850	119 845	
			10/96 → 09/97		116 307	116 112	116 109	
			10/96 → 09/97	– SPOILER –		116 604		
			10/96 → 09/97	8		119 850	119 845	
			10/97 → 2002		116 307	116 112	116 109	116 119
			10/97 → 2002	– SPOILER –		116 604		
			10/97 → 2002	8		119 850	119 845	116 119
		5	04/16 →	8	119 725	119 853		116 513
Carry / Super Carry			1981 → 1984			116 119	116 119	
			1985 → 1992			116 120	116 120	
			1993 →			116 121	116 119	
			1993 →	8		119 840	119 835	
Celerio			01/15 →			116 134	116 119	116 513
			01/15 →	8		119 853	119 835	116 513
Fronte			1981 → 1983			116 119	116 119	
			1986 → 1991			116 121	116 121	
			1991 →			116 124	116 124	
Grand Vitara	XL7		04/98 → 12/05		116 218	116 126	116 126	
			04/98 → 12/05	– SPOILER –		116 623		
			04/98 → 12/05	8		119 848	119 848	
	2	3 5	09/05 → 03/15		116 218	116 126	116 126	116 513
			09/05 → 03/15	– SPOILER –		116 623		
			09/05 → 03/15	8	119 710	119 848	119 848	116 513
Ignis		3 5	10/00 → 09/03		116 226	116 126	116 109	116 119
			10/00 → 09/03	8		119 848	119 845	116 119
			10/03 → 01/10		116 226	116 126	116 126	
			10/03 → 01/10	– SPOILER –		116 623		
			10/03 → 01/10	8		119 848	119 845	
Jimny			10/98 →			116 109	116 121	
			10/98 →	8		119 845	119 840	
Kizashi			03/11 → 12/14	8		119 860	119 850	
Liana			05/01 → 09/03			116 166	116 109	116 116
			05/01 → 09/03	– SPOILER –		116 606		
			05/01 → 09/03	8		119 855	119 845	116 116
			10/03 → 12/06			116 166	116 109	
			10/03 → 12/06	8		119 855	119 845	
Splash			03/08 → 12/14			116 166	116 121	
			03/08 → 12/14	– SPOILER –		116 606		
			03/08 → 12/14	8		119 855	119 840	
Swift			1984 → 06/89			116 124	116 124	
			07/89 → 02/95		116 307	116 112	116 109	116 121
			07/89 → 02/95	– SPOILER –		116 604		
			07/89 → 02/95	8		119 850	119 845	116 121
		3 5	03/95 → 01/05			116 134	116 109	116 120
			03/95 → 01/05	– SPOILER –		116 607		
			03/95 → 01/05	8		119 853	119 845	116 120

Flat Blade OE connections

❶ = ❷ = ❸ = ❹ =

OE Flachwischer Verbindungssysteme

❺ = ❻ = ❼ = ❽ =

For/Für			2 3	– SPOILER – / – HBLADE –	1+1	1	1	
SUZUKI (...)								
Swift		3 5	03/05 → 08/10	– SPOILER –		116 **607**	116 **109**	
			03/05 → 08/10	8	119 **725**	119 **853**	119 **845**	
			09/10 →	8	119 **744**	119 **855**	119 **840**	
			09/10 →	8		119 **855**	119 **840**	
SX4			04/06 → 08/13			116 **137**	116 **119**	
			04/06 → 08/13	8		119 **865**	119 **835**	
SX4 Classic			08/13 →			116 **137**	116 **119**	
			08/13 →	8		119 **865**	119 **835**	
SX4 S-Cross			09/13 →			116 **137**	116 **119**	
			09/13 →	– HBLADE – 8		116 **185**	116 **172**	
			09/13 →	8		119 **865**	119 **835**	
			09/13 →			116 **137**	116 **119**	
			09/13 →	8		119 **865**	119 **835**	
Vitara			09/89 → 1991			116 **124**	116 **124**	
			1991 → 1994			116 **124**		116 **119**
		2 3	1995 → 08/05		116 **226**	116 **109**	116 **109**	116 **120**
			1995 → 08/05	8		119 **845**	119 **845**	116 **120**
		5	1995 → 08/05			116 **124**	116 **124**	116 **120**
	4	5	03/15 →	– HBLADE – 8		116 **183**	116 **174**	
			03/15 →	8	119 **760**	119 **860**	119 **840**	
			03/15 →	8		119 **860**	119 **840**	
Wagon R+			03/97 → 04/00		116 **307**	116 **112**	116 **109**	
			03/97 → 04/00	– SPOILER –		116 **604**		
			03/97 → 04/00	8		119 **850**	119 **840**	
			05/00 → 03/08		116 **307**	116 **112**	116 **109**	116 **119**
			05/00 → 03/08	– SPOILER –		116 **604**		
			05/00 → 03/08	8		119 **850**	119 **845**	116 **119**
X-90			09/95 →		116 **226**	116 **109**	116 **109**	
			09/95 →	– SPOILER –		116 **602**		
TALBOT								
180			1970 → 1979			116 **121**	116 **121**	
1100 VF1 / VF2 / VF3			1976 → 1984			116 **119**	116 **119**	
Bagheera						116 **121**	116 **121**	
Horizon			1978 → 1985			116 **121**	116 **121**	116 **121**
Matra Rancho			1978 → 1984			116 **119**	116 **119**	116 **121**
Samba						116 **121**	116 **121**	
Simca 1000 / Rallye			1970 → 1979			116 **116**	116 **116**	
Simca 1100 / 1200S			1967 → 1981			116 **119**	116 **119**	
Simca 1301 / 1501			1963 → 1975			116 **121**	116 **121**	
Simca 1307 / 1308 / 1309 / 1510						116 **121**	116 **121**	116 **121**
Solara			1978 → 1985			116 **121**	116 **121**	116 **121**
Sunbeam Ti / Lotus			1979 → 1983			116 **121**	116 **121**	116 **121**
Tagora			1981 → 1984		116 **218**	116 **126**	116 **126**	
			1981 → 1984	– SPOILER –		116 **623**		
TATA								
Indica		5	08/03 → 2007	8		119 **850**	119 **850**	
Indigo		4	09/03 → 2012	8		119 **850**	119 **850**	
		SW	09/03 →	8		119 **850**	119 **850**	
Safari			2003 →	8		119 **860**	119 **850**	
Telcoline						116 **129**	116 **129**	
Telcosport						116 **129**	116 **129**	
TOFAS								
Dogan			→ 01/95			116 **120**	116 **120**	
Kartal			→ 01/95			116 **120**	116 **120**	
Sahin			→ 01/95			116 **120**	116 **120**	
TOYOTA								
4-Runner			08/89 → 1993			116 **125**	116 **125**	
			1994 →			116 **124**	116 **124**	
Auris		3 5	03/07 → 12/12			116 **137**	116 **122**	
			03/07 → 12/12	– HBLADE – 8		116 **185**	116 **174**	
			03/07 → 12/12	8		119 **865**	119 **840**	
			03/07 → 12/12			116 **137**	116 **122**	
			03/07 → 12/12	8		119 **865**	119 **840**	
		5	01/13 →	8		119 **865**	119 **835**	
			01/13 →	8		119 **865**	119 **835**	

Flat Blade OE connections

❶ = ❷ = ❸ = ❹ =

OE Flachwischer Verbindungssysteme

❺ = ❻ = ❼ = ❽ =

For/Für			2	– SPOILER – – HBLADE –				
TOYOTA (...)								
Auris		Touring Sports	07/13 →	8		119 865	119 835	
			07/13 →	8		119 865	119 835	
Avensis			01/98 → 03/03	– SPOILER –		116 607	116 109	
			01/98 → 03/03	8	119 725	119 853	119 845	
			04/03 → 11/08			116 148	116 121	
			04/03 → 11/08	8		119 860	119 840	
			12/08 →		119 365			
		5	01/98 → 03/03	– SPOILER –		116 607	116 109	116 112
			01/98 → 03/03	8	119 725	119 853	119 845	116 112
			04/03 → 11/08			116 148	116 121	
			04/03 → 11/08	8		119 860	119 840	
		Sport Wagon	01/98 → 03/03	– SPOILER –		116 607	116 109	116 119
			01/98 → 03/03	8	119 725	119 853	119 845	116 119
			04/03 → 11/08			116 148	116 121	116 513
			04/03 → 11/08	8		119 860	119 840	116 513
			12/08 →		119 365			116 513
Avensis Verso			08/01 → 12/10			116 137	116 121	
Aygo	1	x1	06/05 → 05/14			116 137		116 510
			06/05 → 05/14	8		119 865		
	2	x1	06/14 →	2		119 334		116 513
Blizzard			1980 →			116 120	116 120	
Camry			10/82 → 07/85			116 124	116 124	
			08/85 → 1987			116 129	116 125	
		4	1987 → 06/91			116 129	116 125	
			07/91 → 01/00		116 310	116 134	116 126	
			07/91 → 01/00	– SPOILER –	116 311	116 607		
			07/91 → 01/00	8		119 853	119 848	
		Liftback 5	10/82 → 1986			116 122	116 122	
			1987 → 06/91			116 129	116 122	
			07/91 →		116 310	116 134	116 126	
			07/91 →	– SPOILER –	116 311	116 607		
			07/91 →	8		119 853	119 848	
Carina		4	1971 → 07/77			116 122	116 122	
			08/77 → 07/81			116 124	116 124	
			08/81 → 11/87			116 125	116 125	
		Liftback 5	07/81 → 09/83			116 125	116 125	116 129
			10/83 → 11/87			116 125		116 122
			08/77 → 11/87			116 125	116 125	
	2	4	12/87 → 01/92			116 129	116 125	
		Liftback 5	12/87 → 01/92			116 125	116 125	116 122
Celica			1971 → 1974			116 122	116 122	
			1975 → 1978			116 120	116 120	
			08/85 → 07/87			116 125	116 125	
			08/87 → 1990			116 129		116 125
			1990 → 08/94		116 307	116 112	116 109	116 134
			1990 → 08/94	8		119 850	119 845	116 134
			09/94 → 08/99		116 310	116 134	116 126	116 112
			09/94 → 08/99	– SPOILER –	116 311	116 607		
			09/94 → 08/99	8		119 853	119 848	116 112
			08/87 → 1990			116 129	116 125	
Chaser			1977 → 1979			116 122	116 122	
			1979 → 1982			116 124	116 124	
			01/82 → 01/85			116 125	116 125	
Corolla			1975 → 07/79			116 122	116 122	
			08/79 → 07/81			116 124	116 124	
			08/81 → 07/87			116 125	116 125	
		3 5	08/87 → 04/92			116 129	116 125	
			05/92 → 06/97		116 307	116 112	116 109	116 109
			05/92 → 06/97	– SPOILER –		116 604		
			05/92 → 06/97	8		119 850	119 845	116 109
		4	08/87 → 04/92			116 129	116 125	
			05/92 → 01/00		116 307	116 112	116 109	
			05/92 → 01/00	– SPOILER –		116 604		
			05/92 → 01/00	8		119 850	119 845	
			08/87 → 04/92			116 129	116 125	
			05/92 → 06/97		116 307	116 112	116 109	116 121
			05/92 → 06/97	– SPOILER –		116 604		

4

Flat Blade OE connections

❶ = ❷ = ❸ = ❹ =

OE Flachwischer Verbindungssysteme

❺ = ❻ = ❼ = ❽ =

For/Für				– SPOILER – – HBLADE –				
TOYOTA (...)								
Corolla			05/92 → 06/97	8		119 **850**	119 **845**	116 **121**
			07/97 → 01/00		116 **307**	116 **112**	116 **109**	116 **119**
			07/97 → 01/00	– SPOILER –		116 **604**		
			07/97 → 01/00	8		119 **850**	119 **845**	116 **119**
			02/00 → 09/02	– SPOILER –		116 **607**	116 **109**	116 **119**
			02/00 → 09/02	8		119 **853**	119 **845**	116 **119**
		Compact 3	07/97 → 12/01		116 **307**	116 **112**	116 **109**	116 **121**
			07/97 → 12/01	– SPOILER –		116 **604**		
			07/97 → 12/01	8		119 **850**	119 **845**	116 **121**
		Liftback	1977 → 07/79			116 **122**	116 **122**	116 **125**
			08/79 → 07/81			116 **124**	116 **124**	116 **125**
			08/81 → 07/83			116 **125**	116 **125**	116 **125**
			08/83 → 07/87			116 **125**	116 **124**	116 **122**
		Liftback 5	07/97 → 01/00		116 **307**	116 **112**	116 **109**	116 **112**
			07/97 → 01/00	– SPOILER –		116 **604**		
			07/97 → 01/00	8		119 **850**	119 **845**	116 **112**
			02/00 → 12/01	– SPOILER –		116 **607**	116 **109**	116 **112**
			02/00 → 12/01	8		119 **853**	119 **845**	116 **112**
	(E12)	(Made in Europe) 3 5	01/02 → 03/07			116 **166**	116 **109**	
			01/02 → 03/07	8		119 **855**	119 **845**	
		(Made in Europe)	10/02 → 03/07			116 **166**	116 **109**	
			10/02 → 03/07	– SPOILER –		116 **606**		
			10/02 → 03/07	8		119 **855**	119 **845**	
Corolla Verso	1		01/02 → 04/04			116 **137**	116 **121**	
			01/02 → 04/04	8		119 **865**	119 **840**	
	2		05/04 → 05/09			116 **137**	116 **122**	116 **513**
Corolla Verso S		x1	03/11 →	– HBLADE – 8		116 **187**		116 **513**
Corona			1969 → 1978			116 **122**	116 **122**	
			1978 → 1981			116 **124**	116 **124**	116 **122**
Cressida	1		1977 → 1979			116 **122**	116 **122**	
	1 / 2		1979 → 1982			116 **124**	116 **124**	
	2		1982 → 1985			116 **125**	116 **125**	
	3		1985 →			116 **129**	116 **125**	
Crown			1966 → 1981			116 **122**	116 **122**	
			1982 → 1983			116 **124**	116 **124**	
			1984 → 1985			116 **125**	116 **125**	
			1985 →			116 **129**		
Dyna			1972 → 1977			116 **122**	116 **122**	
			1985 →			116 **124**		
GT86			06/12 →			116 **166**	116 **112**	
			06/12 →	– HBLADE – 8		116 **180**	116 **178**	
			06/12 →	8	119 **742**			
Hi-Ace			1975 → 1978			116 **137**	116 **122**	
			1979 → 1983			116 **122**		
			1984 → 12/90			116 **129**	116 **125**	116 **124**
			1991 → 10/95			116 **129**	116 **129**	
Hi-Lux			1977 → 07/88			116 **122**	116 **122**	
			08/88 → 09/05			116 **124**	116 **121**	
			08/88 → 09/05	– SPOILER –		116 **602**		
			08/88 → 09/05	8		119 **845**	119 **840**	
			10/05 → 05/16			116 **134**	116 **126**	
			10/05 → 05/16	– SPOILER –	116 **311**	116 **607**		
			10/05 → 05/16	8		119 **853**	119 **848**	
			06/16 →	8	119 **744**	119 **855**	119 **840**	
			06/16 →	8		119 **855**	119 **840**	
IQ			12/08 → 12/14			116 **166**	116 **109**	
			12/08 → 12/14	– SPOILER –		116 **606**		
			12/08 → 12/14	8		119 **855**	119 **845**	
Land-Cruiser			1978 → 1981			116 **122**	116 **122**	
			1982 → 1985			116 **125**	116 **125**	
			1985 → 01/90			116 **124**	116 **122**	
			02/90 → 07/96		116 **226**	116 **109**	116 **109**	116 **121**
			02/90 → 07/96	8		119 **845**	119 **845**	116 **121**
	90 (J9)	~~Station Wagon~~ 3 5	08/96 → 12/02		116 **226**	116 **126**	116 **109**	116 **119**
			08/96 → 12/02	– SPOILER –		116 **623**		
			08/96 → 12/02	8		119 **848**	119 **845**	116 **119**
	(120 / 125)	~~VXE~~ 3 5	01/03 → 12/09			116 **166**	116 **134**	116 **109**

4

Flat Blade OE connections

❶ = ❷ = ❸ = ❹ =

OE Flachwischer Verbindungssysteme

❺ = ❻ = ❼ = ❽ =

For/Für				– SPOILER – – HBLADE –				
▶ TOYOTA (...)								
Land-Cruiser	(120 / 125)	~~VXE~~ 3 5	01/03 → 12/09	– SPOILER –		116 **606**	116 **134**	116 **109**
			01/03 → 12/09	8		119 **855**	119 **853**	116 **109**
	(120)	VXE 3 5	01/03 → 12/09			116 **166**	116 **134**	116 **532**
			01/03 → 12/09	– SPOILER –		116 **606**		
			01/03 → 12/09	8		119 **855**	119 **853**	116 **532**
	150 (KD,GR)		12/09 →			116 **137**	116 **112**	116 **513**
			12/09 →	– HBLADE – 8		116 **185**	116 **178**	116 **513**
			12/09 →	8		119 **865**	119 **850**	116 **513**
			12/09 →			116 **137**	116 **112**	116 **513**
			12/09 →	8		119 **865**	119 **850**	116 **513**
	500		01/01 → 11/07	– SPOILER –		116 **606**	116 **134**	116 **513**
			01/01 → 11/07	8		119 **860**	119 **855**	116 **513**
	(HDJ80)	Station Wagon	08/96 → 03/98		116 **226**	116 **109**	116 **109**	116 **121**
			08/96 → 03/98	– SPOILER –	116 **301**	116 **602**		
			08/96 → 03/98	8		119 **845**	119 **845**	116 **121**
	(HDJ100)	Station Wagon	04/98 → 11/07		116 **220**	116 **112**	116 **112**	116 **513**
			04/98 → 11/07	– SPOILER –		116 **604**		
			04/98 → 11/07	8		119 **850**	119 **850**	116 **513**
	Station TD		1980 → 1985			116 **125**	116 **125**	116 **513**
Lite-Ace			08/80 → 09/85			116 **122**	116 **122**	116 **121**
			10/85 →			116 **129**	116 **119**	116 **513**
Modele F			1982 → 08/84			116 **125**	116 **125**	116 **121**
			09/84 →			116 **129**	116 **119**	116 **513**
MR2			1984 → 12/89			116 **125**	116 **125**	116 **121**
			01/90 →		116 **218**	116 **112**	116 **126**	116 **513**
			01/90 →	8		119 **850**	119 **848**	116 **513**
Paseo			03/96 → 07/99		116 **307**	116 **112**	116 **109**	116 **121**
			03/96 → 07/99	– SPOILER –		116 **604**		
			03/96 → 07/99	8		119 **850**	119 **845**	116 **121**
			03/96 → 07/99		116 **307**	116 **112**	116 **109**	116 **513**
			03/96 → 07/99	– SPOILER –		116 **604**		
			03/96 → 07/99	8		119 **850**	119 **845**	116 **513**
Picnic			04/98 → 07/05			116 **148**	116 **119**	116 **513**
Prius	1		12/00 → 02/04			116 **148**	116 **121**	116 **121**
			12/00 → 02/04	8		119 **860**	119 **840**	116 **121**
	2		03/04 → 06/09			116 **137**	116 **121**	116 **513**
			03/04 → 06/09	8		119 **865**	119 **840**	116 **513**
	3	5	07/09 → 02/16	– HBLADE – 8		116 **185**	116 **174**	116 **121**
			07/09 → 02/16	8	119 **780**			116 **121**
Proace			01/14 → 08/16			116 **137**	116 **112**	116 **513**
			01/14 → 08/16	8		119 **865**	119 **850**	116 **513**
			01/14 → 08/16			116 **137**	116 **112**	116 **121**
			01/14 → 08/16	8		119 **865**	119 **850**	116 **121**
Proace / Proace Verso	2		09/16 →	3	NEW 119 **466**			116 **540**
			09/16 →	3	NEW 119 **466**			116 **520**
Rav 4		Funcruiser 3 5	04/94 → 07/00		116 **307**	116 **112**	116 **109**	116 **513**
			04/94 → 07/00	– SPOILER –		116 **604**		
			04/94 → 07/00	8		119 **850**	119 **845**	116 **513**
			08/00 → 02/06			116 **148**	116 **126**	116 **121**
			08/00 → 02/06	8		119 **860**	119 **848**	116 **121**
			03/06 → 03/13			116 **148**	116 **124**	116 **513**
			03/06 → 03/13	– HBLADE – 8		116 **183**	116 **174**	116 **513**
			03/06 → 03/13	8		119 **860**	119 **840**	116 **513**
			03/06 → 03/13	8		119 **860**	119 **840**	116 **513**
Starlet			10/78 → 10/85			116 **122**	116 **122**	116 **513**
			11/85 → 12/89			116 **125**		116 **121**
			01/90 → 04/96			116 **129**	116 **124**	116 **513**
		3 5	05/96 →		116 **307**	116 **112**	116 **109**	116 **121**
			05/96 →	– SPOILER –		116 **604**		
			05/96 →	8		119 **850**	119 **840**	116 **121**
Supra			01/86 → 1992			116 **125**	116 **125**	116 **513**
			1993 →		116 **220**	116 **134**	116 **112**	116 **121**
			1993 →	– SPOILER –	116 **313**	116 **607**		
			1993 →	8		119 **853**	119 **850**	116 **121**
Tercel			1979 → 08/82			116 **120**	116 **120**	116 **513**
			09/82 → 01/86			116 **125**	116 **125**	116 **121**
			02/86 →			116 **129**		116 **513**

4

Flat Blade OE connections

❶ = ❷ = ❸ = ❹ =

❺ = ❻ = ❼ = ❽ =

OE Flachwischer Verbindungssysteme

For/Für			2	– SPOILER – – HBLADE –	1+	1		
TOYOTA (...)								
Urban Cruiser			03/09 → 10/13			116 **148**	116 **119**	116 **121**
			03/09 → 10/13	8		119 **860**	119 **835**	116 **121**
Verso			06/09 →			116 **137**	116 **121**	116 **513**
			06/09 →	– HBLADE – 8		116 **185**	116 **174**	116 **513**
			06/09 →	8	119 **780**	119 **865**	119 **840**	116 **513**
			06/09 →	8		119 **865**	119 **840**	116 **513**
Verso S		x1	03/11 →	– HBLADE – 8		116 **187**		116 **513**
Yaris	1	(Made in Japan)	04/99 → 12/05			116 **134**	116 **119**	116 **513**
			04/99 → 12/05	8		119 **850**	119 **840**	116 **513**
		(Made in France)	02/01 → 12/05			116 **112**	116 **119**	116 **510**
			02/01 → 12/05	– SPOILER –		116 **604**		
			02/01 → 12/05	8		119 **850**	119 **840**	116 **510**
	2	3	01/06 → 08/11			116 **148**	116 **119**	116 **513**
			01/06 → 08/11	8		119 **860**	119 **835**	116 **513**
		5	01/06 → 08/11			116 **148**	116 **119**	116 **516**
			01/06 → 08/11	8		119 **860**	119 **835**	116 **516**
	3	3 5 x1	09/11 →	– HBLADE – 8		116 **187**		116 **513**
Yaris Verso			11/99 → 12/04			116 **166**	116 **121**	116 **513**
			11/99 → 12/04	8		119 **855**	119 **840**	116 **513**
			01/05 → 02/11			116 **166**	116 **121**	116 **532**
			01/05 → 02/11	8		119 **855**	119 **840**	116 **532**
VAUXHALL								
Agila	Mk.I		05/00 → 02/08		116 **220**	116 **112**	116 **112**	116 **513**
			05/00 → 02/08	– SPOILER –		116 **604**		
			05/00 → 02/08	8		119 **850**	119 **845**	116 **513**
	Mk.II		03/08 →			116 **166**	116 **121**	116 **121**
			03/08 →	– SPOILER –		116 **606**		
			03/08 →	8		119 **855**	119 **840**	116 **121**
Ampera			11/11 → 06/15	6	119 **281**			116 **513**
Albany			09/90 →		116 **226**	116 **109**	116 **109**	116 **121**
			09/90 →	8		119 **845**	119 **845**	116 **121**
Antara			12/06 →	8		119 **860**	119 **840**	116 **513**
Arena			02/98 →		116 **220**	116 **112**	116 **112**	116 **121**
			02/98 →	8		119 **850**	119 **850**	116 **121**
Astra	Mk.I		08/79 → 07/84			116 **121**	116 **121**	116 **513**
			08/79 → 07/84	– SPOILER –		116 **601**		
			08/79 → 07/84	8		119 **840**	119 **840**	116 **513**
		3	08/79 → 07/84			116 **121**	116 **121**	116 **121**
			08/79 → 07/84	– SPOILER –		116 **601**		
			08/79 → 07/84	8		119 **840**	119 **840**	116 **121**
		Van	1982 → 12/84			116 **121**	116 **121**	116 **513**
			1982 → 12/84	– SPOILER –		116 **601**		
			1982 → 12/84	8		119 **840**	119 **840**	116 **513**
	Mk.II	Belmont ~~GTE~~	08/84 → 08/91		116 **226**	116 **109**	116 **109**	116 **121**
			08/84 → 08/91	– SPOILER –	116 **301**	116 **602**		
			08/84 → 08/91	8		119 **845**	119 **845**	116 **121**
		GTE	08/84 → 08/91		116 **226**	116 **109**	116 **109**	116 **513**
			08/84 → 08/91	– SPOILER –	116 **301**	116 **602**		
			08/84 → 08/91	8		119 **845**	119 **845**	116 **513**
		3	08/84 → 08/91		116 **226**	116 **109**	116 **109**	116 **121**
			08/84 → 08/91	– SPOILER –	116 **301**	116 **602**		
			08/84 → 08/91	8		119 **845**	119 **845**	116 **121**
		3	10/85 → 08/91		116 **226**	116 **109**	116 **109**	116 **513**
			10/85 → 08/91	– SPOILER –	116 **301**	116 **602**		
			10/85 → 08/91	8		119 **845**	119 **845**	116 **513**
		Van	1984 → 12/91		116 **226**	116 **109**	116 **109**	116 **121**
			1984 → 12/91	– SPOILER –		116 **602**		
			1984 → 12/91	8		119 **845**	119 **845**	116 **121**
	Mk.III	3	09/91 → 06/98		116 **226**	116 **109**	116 **109**	116 **121**
			09/91 → 06/98	– SPOILER –	116 **301**	116 **602**		
			09/91 → 06/98	8		119 **845**	119 **845**	116 **121**
		4	09/91 → 06/98		116 **226**	116 **109**	116 **109**	116 **513**
			09/91 → 06/98	– SPOILER –		116 **602**		
			09/91 → 06/98	8		119 **845**	119 **845**	116 **513**
		5	09/91 → 03/98			116 **109**	116 **109**	116 **109**
			09/91 → 03/98	– SPOILER –	116 **301**	116 **602**		

4

Flat Blade OE connections

❶ = ❷ = ❸ = ❹ =

❺ = ❻ = ❼ = ❽ =

OE Flachwischer Verbindungssysteme

For/Für			2 in 1	– SPOILER – – HBLADE –				
▶ VAUXHALL (...)								
Astra	Mk.III	5	09/91 → 03/98	8		119 845	119 845	116 109
			09/91 → 03/98		116 226	116 109	116 109	116 513
			09/91 → 03/98	– SPOILER –		116 602		
			09/91 → 03/98	8		119 845	119 845	116 513
			07/93 → 05/01		116 226	116 109	116 109	116 121
			07/93 → 05/01	– SPOILER –		116 602		
			07/93 → 05/01	8		119 845	119 845	116 121
		Van	1991 →		116 226	116 109	116 109	116 513
			1991 →	– SPOILER –		116 602		
			1991 →	8		119 845	119 845	116 513
	Mk.IV	3 5	04/98 → 04/04		116 218	116 112	116 126	116 550
			04/98 → 04/04	– SPOILER –	116 335	116 604		
			04/98 → 04/04	8		119 850	119 845	116 550
			06/00 → 12/04		116 218	116 112	116 126	116 513
			06/00 → 12/04	– SPOILER –	116 335	116 604		
			06/00 → 12/04	8		119 850	119 845	116 513
			06/01 → 02/06		116 218	116 112	116 126	116 121
			06/01 → 02/06	– SPOILER –	116 335	116 604		
			06/01 → 02/06	8		119 850	119 845	116 121
			04/98 → 08/04		116 218	116 112	116 126	116 530
			04/98 → 08/04	– SPOILER –	116 335	116 604		
			04/98 → 08/04	8		119 850	119 845	116 530
	Mk.VI	5	01/10 → 09/15	6	119 281			116 514
		Sports Tourer	01/11 → 03/16	6	119 281			116 514
Brava			1988 →		116 226	116 109	116 109	116 121
			1988 →	8		119 845	119 845	116 121
Calibra			09/89 → 01/98		116 218	116 126	116 126	116 513
			09/89 → 01/98	– SPOILER –		116 623		
			09/89 → 01/98	8		119 848	119 848	116 513
Carlton	Mk.I	Viceroy	08/77 → 09/86		116 226	116 109	116 109	116 121
			08/77 → 09/86		116 226	116 109	116 109	116 513
	Mk.II		10/86 → 01/94		116 218	116 129	116 129	116 121
			10/86 → 01/94	8		119 848	119 848	116 121
			10/86 → 01/94		116 218	116 126	116 126	116 513
			10/86 → 01/94	– SPOILER –		116 623		
			10/86 → 01/94	8		119 848	119 848	116 513
Cavalier	Mk.I		08/75 → 07/81		116 226	116 109	116 109	116 121
			08/75 → 07/81	– SPOILER –		116 602		
			08/75 → 07/81	8		119 845	119 845	116 121
	Mk.II		08/81 → 07/88		116 226	116 109	116 109	116 513
			08/81 → 07/88	– SPOILER –		116 602		
			08/81 → 07/88	8		119 845	119 845	116 513
			08/81 → 07/88		116 226	116 109	116 109	116 121
			08/81 → 07/88	– SPOILER –		116 602		
			08/81 → 07/88	8		119 845	119 845	116 121
	Mk.III	4	09/88 → 08/95		116 218	116 126	116 126	116 513
			09/88 → 08/95	– SPOILER –		116 623		
			09/88 → 08/95	8		119 848	119 848	116 513
		5	09/88 → 08/95		116 218	116 126	116 126	116 121
			09/88 → 08/95	– SPOILER –		116 623		
			09/88 → 08/95	8		119 848	119 848	116 121
Chevanne			01/75 → 12/82			116 122	116 122	116 513
Chevette			1975 → 1984			116 122	116 122	116 121
Combo			1993 →		116 226	116 109	116 109	116 513
			1993 →	– SPOILER –		116 602		
			1993 →	8		119 845	119 845	116 513
Corsa	Mk.I	3	03/93 → 09/00		116 226	116 109	116 109	116 121
			03/93 → 09/00	– SPOILER –		116 602		
			03/93 → 09/00	8		119 845	119 845	116 121
		5	03/93 → 09/00		116 226	116 109	116 109	116 513
			03/93 → 09/00	– SPOILER –		116 602		
			03/93 → 09/00	8		119 845	119 845	116 513
		Van	1993 → 09/00		116 226	116 109	116 109	116 121
			1993 → 09/00	– SPOILER –		116 602		
			1993 → 09/00	8		119 845	119 845	116 121
	Mk.II		10/00 → 08/06		116 307	116 112	116 109	116 550
			10/00 → 08/06	– SPOILER –		116 604		

4

Flat Blade OE connections

❶ = ❷ = ❸ = ❹ =

OE Flachwischer Verbindungssysteme

❺ = ❻ = ❼ = ❽ =

For/Für				– SPOILER – – HBLADE –				
▶ VAUXHALL (...)								
Corsa	Mk.II		10/00 → 08/06	8		119 **850**	119 **845**	116 **550**
Frontera		3 5	03/91 →		116 **218**	116 **126**	116 **126**	116 **121**
			03/91 →	– SPOILER –		116 **623**		
			03/91 →	8		119 **848**	119 **848**	116 **121**
GME Midi			01/85 → 12/92			116 **121**	116 **121**	116 **513**
			01/85 → 12/92	8		119 **840**	119 **840**	116 **513**
			1992 →		116 **226**	116 **109**	116 **109**	116 **121**
			1992 →	8		119 **845**	119 **845**	116 **121**
Insignia		4	01/09 →			116 **148**	116 **109**	116 **513**
			01/09 →	8		119 **860**	119 **845**	116 **513**
		5	01/09 →			116 **148**	116 **109**	119 **512**
			01/09 →	8		119 **860**	119 **845**	119 **512**
		Sports Tourer	03/09 →			116 **148**	116 **109**	116 **520**
			03/09 →	8		119 **860**	119 **845**	116 **520**
Magnum			1973 → 1978			116 **120**	116 **120**	116 **121**
Manta			08/75 → 05/79		116 **226**	116 **109**	116 **109**	116 **513**
			08/75 → 05/79	– SPOILER –		116 **602**		
			08/75 → 05/79	8		119 **845**	119 **845**	116 **513**
			06/79 → 08/80		116 **226**	116 **109**	116 **109**	116 **121**
			06/79 → 08/80	– SPOILER –		116 **602**		
			06/79 → 08/80	8		119 **845**	119 **845**	116 **121**
Meriva	Mk.I		04/03 → 05/10		116 **337**			116 **550**
			04/03 → 05/10	8		119 **855**	119 **860**	
Monterey			04/92 → 04/95		116 **220**	116 **112**	116 **112**	116 **513**
			04/92 → 04/95	8		119 **850**	119 **850**	116 **513**
			05/95 →		116 **220**	116 **112**	116 **112**	116 **121**
			05/95 →	8		119 **850**	119 **850**	116 **121**
Movano			02/98 → 10/99		116 **341**			116 **513**
			11/99 → 04/10		116 **341**			116 **121**
			05/10 →			116 **137**	116 **137**	116 **513**
			05/10 →	8		119 **865**	119 **865**	116 **513**
Nova			10/82 → 02/93			116 **121**	116 **121**	116 **121**
			10/82 → 02/93	– SPOILER –		116 **601**		
			10/82 → 02/93	8		119 **840**	119 **840**	116 **121**
		Van	1988 → 02/93			116 **121**	116 **121**	116 **513**
			1988 → 02/93	– SPOILER –		116 **601**		
			1988 → 02/93	8		119 **840**	119 **840**	116 **513**
Omega			02/94 →			116 **148**	116 **126**	116 **121**
			02/94 →	8		119 **860**	119 **848**	116 **121**
			02/94 →			116 **148**	116 **126**	116 **513**
			02/94 →	8		119 **860**	119 **848**	116 **513**
Rascal			1986 →			116 **121**	116 **121**	116 **121**
			1986 →	8		119 **840**	119 **840**	116 **121**
Royale			06/78 → 12/82		116 **226**	116 **109**	116 **109**	116 **513**
			06/78 → 12/82	– SPOILER –		116 **602**		
			06/78 → 12/82	8		119 **845**	119 **845**	116 **513**
Senator			06/78 → 01/87		116 **226**	116 **109**	116 **109**	116 **121**
			06/78 → 01/87	8		119 **845**	119 **845**	116 **121**
			02/87 → 06/93		116 **218**	116 **129**	116 **129**	116 **513**
			02/87 → 06/93	8		119 **848**	119 **848**	116 **513**
Signum			05/03 → 11/08	8	119 **762**	119 **860**	119 **848**	116 **121**
Sintra			10/96 →			116 **148**	116 **148**	116 **513**
			10/96 →	8		119 **860**	119 **860**	116 **513**
Tigra			10/94 →		116 **226**	116 **109**	116 **109**	116 **121**
			10/94 →	– SPOILER –		116 **602**		
			10/94 →	8		119 **845**	119 **845**	116 **121**
		TwinTop	09/04 →		116 **307**	116 **112**	116 **109**	116 **513**
			09/04 →	– SPOILER –		116 **604**		
			09/04 →	8		119 **850**	119 **845**	116 **513**
Vectra	Mk.I	4	09/95 → 03/02		116 **218**	116 **126**	116 **126**	116 **121**
			09/95 → 03/02	– SPOILER –		116 **623**		
			09/95 → 03/02	8		119 **848**	119 **848**	116 **121**
		5	09/95 → 03/02		116 **218**	116 **126**	116 **126**	116 **513**
			09/95 → 03/02	– SPOILER –		116 **623**		
			09/95 → 03/02	8		119 **848**	119 **848**	116 **513**
			11/96 → 11/03		116 **218**	116 **126**	116 **126**	116 **121**
			11/96 → 11/03	– SPOILER –		116 **623**		

Flat Blade OE connections

❶ = ❷ = ❸ = ❹ =

OE Flachwischer Verbindungssysteme

❺ = ❻ = ❼ = ❽ =

For/Für			2+3	– SPOILER – HBLADE –				
VAUXHALL (...)								
Vectra	Mk.I		11/96 → 11/03	8		119 **848**	119 **848**	116 **121**
	Mk.II		04/02 → 12/08			116 **148**	116 **126**	116 **513**
			04/02 → 12/08	– SPOILER –		116 **619**		
			04/02 → 12/08	8	119 **762**	119 **860**	119 **848**	116 **513**
			04/02 → 09/05			116 **148**	116 **126**	116 **550**
			04/02 → 09/05	– SPOILER –		116 **619**		
			04/02 → 09/05	8	119 **762**	119 **860**	119 **848**	116 **550**
			10/05 → 12/08			116 **148**	116 **126**	119 **507**
			10/05 → 12/08	– SPOILER –		116 **619**		
			10/05 → 12/08	8	119 **762**	119 **860**	119 **848**	119 **507**
			12/03 → 02/09			116 **148**	116 **126**	116 **121**
			12/03 → 02/09	– SPOILER –		116 **619**		
			12/03 → 02/09	8	119 **762**	119 **860**	119 **848**	116 **121**
Ventora / Victor			1971 → 1976		116 **226**	116 **109**	116 **109**	116 **513**
			1971 → 1976	8		119 **845**	119 **845**	116 **513**
Viva / Karl			06/15 →	8		119 **860**	119 **835**	116 **121**
Vivaro			06/01 → 02/02	8		119 **860**	119 **853**	116 **550**
			03/02 → 06/14	8		119 **860**		116 **513**
			06/01 → 06/14	– SPOILER –	116 **340**			116 **550**
			06/01 → 06/14	8		119 **860**	119 **853**	
Zafira	Mk.I		03/99 → 06/05		116 **337**			116 **550**
			03/99 → 06/05	8		119 **855**	119 **860**	
VAZ								
1500			01/93 →			116 **121**	116 **121**	116 **513**
2101						116 **119**	116 **119**	116 **121**
2103						116 **119**	116 **119**	116 **513**
2104			09/86 →			116 **119**	116 **119**	116 **121**
2105			09/86 →			116 **119**	116 **119**	116 **513**
2106			09/72 → 08/84			116 **119**	116 **119**	116 **121**
2107			05/81 →			116 **119**	116 **119**	116 **513**
2121 Niva			07/88 →			116 **119**	116 **119**	116 **121**
S 1203			01/69 → 12/93			116 **121**	116 **121**	116 **513**
VOLKSWAGEN								
1200...1500		Coccinelle Type1	1969 → 1975			116 **116**	116 **116**	116 **121**
1303...1600		Coccinelle Type2	1972 → 1985			116 **120**	116 **120**	116 **513**
Amarok			09/12 →	6	119 **340**			116 **121**
Beetle	2		12/11 →	6	119 **258**			116 **513**
			03/13 →	6	119 **258**			116 **121**
Bora			10/98 → 06/02	– SPOILER –	116 **351**	116 **607**	116 **192**	116 **513**
			10/98 → 06/02	8	119 **728**	119 **853**	119 **848**	116 **513**
			07/02 → 08/05	1	119 **319**			116 **121**
			07/02 → 08/05	1	119 **325**			116 **513**
			05/99 → 06/02	– SPOILER –	116 **351**	116 **607**	116 **192**	116 **121**
			05/99 → 06/02	8	119 **728**	119 **853**	119 **848**	116 **121**
			07/02 → 08/05	1	119 **319**			116 **513**
			07/02 → 08/05	1	119 **325**			116 **121**
Caddy	I		08/82 → 07/92			116 **121**	116 **121**	116 **513**
			08/82 → 07/92	– SPOILER –		116 **601**		
			08/82 → 07/92	8		119 **840**	119 **840**	116 **513**
	II		09/96 → 01/04			116 **134**	116 **109**	116 **121**
			09/96 → 01/04	– SPOILER –		116 **607**		
			09/96 → 01/04	8		119 **853**	119 **845**	116 **121**
		Pick-Up	01/96 → 12/00		116 **220**	116 **112**	116 **112**	116 **513**
			01/96 → 12/00	– SPOILER –		116 **604**		
			01/96 → 12/00	8		119 **850**	119 **850**	116 **513**
	III	Caddy Life	04/04 → 08/10	1	119 **355**			119 **502**
		Caddy Life	04/04 → 08/10	1	119 **355**			116 **121**
		Caddy Life	03/07 → 08/10	6	119 **305**			119 **502**
		Caddy Life	03/07 → 08/10	6	119 **305**			116 **121**
		Caddy/ Caddy Maxi/ Cross Caddy	09/10 → 06/15	6	119 **298**			119 **502**
		Caddy/ Caddy Van/ Maxi Van	09/10 → 06/15	6	119 **298**			116 **121**
	IV	Caddy/ Caddy Maxi/ Cross Caddy	07/15 →	6	119 **298**			119 **525**
		Caddy/ Caddy Van/ Maxi Van	07/15 →	6	119 **298**			116 **121**
		Alltrack	12/15 →	6	119 **298**			119 **525**
Caravelle			09/90 →		116 **222**	116 **134**	116 **134**	116 **121**
			09/90 →	– SPOILER –	116 **314**	116 **607**		
			09/90 →	8		119 **853**	119 **853**	116 **121**

4

Flat Blade OE connections

❶ = ❷ = ❸ = ❹ =

OE Flachwischer Verbindungssysteme

❺ = ❻ = ❼ = ❽ =

For/Für			2	– SPOILER – – HBLADE –				
VOLKSWAGEN (...)								
CC			01/12 →	❻	119 **261**			
Coccinelle			12/11 →	❻	119 **258**			
			03/13 →	❻	119 **258**			
Combi / Microbus						116 **121**	116 **121**	
Corrado			09/88 →		116 **218**	116 **126**	116 **126**	116 **109**
			09/88 →	– SPOILER –		116 **623**		
			09/88 →	❽		119 **848**	119 **848**	116 **109**
Crafter	1		06/06 → 02/17	❷	119 **407**			119 **508**
Derby			01/77 → 10/84			116 **121**	116 **121**	
			01/77 → 10/84	– SPOILER –		116 **601**		
			01/77 → 10/84	❽		119 **840**	119 **840**	
Eos			02/06 →	❻	119 **305**			
Fox			06/05 → 12/11	❽		119 **853**	119 **838**	
Golf	1		02/74 → 07/83			116 **121**	116 **121**	116 **121**
			02/74 → 07/83	– SPOILER –		116 **601**		
			02/74 → 07/83	❽		119 **840**	119 **840**	116 **121**
			02/79 → 08/93			116 **121**	116 **121**	
			02/79 → 08/93	– SPOILER –		116 **601**		
			02/79 → 08/93	❽		119 **840**	119 **840**	
	2	C / CL / GL	08/83 → 10/91			116 **121**	116 **121**	116 **121**
			08/83 → 10/91	– SPOILER –		116 **601**		
			08/83 → 10/91	❽		119 **840**	119 **840**	116 **121**
		GT / GTD / GTI / GLX	08/83 → 10/91		116 **226**	116 **109**	116 **109**	116 **121**
			08/83 → 10/91	– SPOILER –	116 **301**	116 **602**		
			08/83 → 10/91	❽		119 **845**	119 **845**	116 **121**
	3	3 5	11/91 → 12/95			116 **134**	116 **126**	116 **119**
			11/91 → 12/95	– SPOILER –	116 **311**	116 **607**		
			11/91 → 12/95	❽	119 **729**	119 **853**	119 **845**	116 **119**
			09/93 → 04/99			116 **134**	116 **126**	116 **119**
			09/93 → 04/99	– SPOILER –	116 **311**	116 **607**		
			09/93 → 04/99	❽	119 **729**	119 **853**	119 **845**	116 **119**
			09/93 → 06/02			116 **134**	116 **126**	
			09/93 → 06/02	– SPOILER –	116 **311**	116 **607**		
			09/93 → 06/02	❽	119 **729**	119 **853**	119 **845**	
	4	3 5	11/97 → 06/02	– SPOILER –	116 **351**	116 **607**	116 **192**	116 **119**
			11/97 → 06/02	❽	119 **728**	119 **853**	119 **848**	116 **119**
			07/02 → 10/03	❶	119 **319**			116 **119**
			07/02 → 10/03	❶	119 **325**			116 **119**
			05/99 → 06/02	– SPOILER –	116 **351**	116 **607**	116 **192**	116 **120**
			05/99 → 06/02	❽	119 **728**	119 **853**	119 **848**	116 **120**
			07/02 → 08/05	❶	119 **319**			116 **120**
			07/02 → 08/05	❶	119 **325**			116 **120**
	5	Plus 3 5	11/03 → 11/05	❶	119 **355**			119 **504**
			12/05 → 09/08	❻	119 **305**			119 **504**
		GT 3 5	10/05 → 09/08	❻	119 **305**			119 **504**
		SW	06/07 → 09/09	❻	119 **305**			119 **504**
	6	3 5	10/08 → 10/12	❻	119 **305**			119 **514**
			06/11 →	❻	119 **261**			
		SW	10/09 → 07/13	❻	119 **305**			119 **504**
	7	3 5	11/12 →	❻	119 **272**			119 **514**
		GTI / GTD / GTE / R 3 5	03/13 →	❻	119 **272**			119 **514**
		Variant / SW	08/13 →	❻	119 **272**			119 **514**
		Alltrack	04/15 →	❻	119 **272**			119 **514**
Golf Plus			03/05 → 03/09	❶	119 **383**			119 **504**
			04/09 → 03/14	❶	119 **383**			119 **518**
Golf Sportsvan			06/14 →	❻	119 **441**			119 **514**
Jetta	1 / 2		08/79 →			116 **121**	116 **121**	
			08/79 →	– SPOILER –		116 **601**		
			08/79 →	❽		119 **840**	119 **840**	
		GT / TD	01/84 →		116 **226**	116 **109**	116 **109**	
			01/84 →	– SPOILER –	116 **301**	116 **602**		
			01/84 →	❽		119 **845**	119 **845**	
			09/05 → 06/06	❶	119 **355**			
			12/05 → 12/10	❻	119 **305**			
			01/11 →	❻	119 **261**			
Kleinbus					116 **226**	116 **109**	116 **109**	
				❽		119 **845**	119 **845**	

4

Flat Blade OE connections

❶ = ❷ = ❸ = ❹ =

OE Flachwischer Verbindungssysteme

❺ = ❻ = ❼ = ❽ =

For/Für				– SPOILER – – HBLADE –				
VOLKSWAGEN (...)								
LT28...50			04/75 → 06/82		116 220	116 112	116 112	
LT28...55			07/82 → 08/96		116 218	116 126	116 126	
			07/82 → 08/96	8		119 848	119 848	
LT			09/96 → 06/06			116 148	116 166	
			09/96 → 06/06	8		119 860	119 855	
Lupo			10/98 → 06/05	– SPOILER –	116 351	116 607	116 192	116 116
			10/98 → 06/05	8		119 853	119 845	116 116
		GTI	11/00 → 06/05	1	119 251			
Multivan / California			09/90 → 05/03		116 222	116 134	116 134	116 121
			09/90 → 05/03	– SPOILER –	116 314	116 607		
			09/90 → 05/03	8		119 853	119 853	116 121
	T5		06/03 → 01/13	1	119 360			119 502
			06/03 → 01/13	1	119 361			119 502
			01/08 → 08/13			116 148	116 194	119 502
			01/08 → 08/13	– SPOILER –		116 612		
			01/08 → 08/13	8		119 860	119 855	119 502
			09/13 → 07/15	6	119 340			119 502
			06/03 → 01/13	1	119 360			119 503
			06/03 → 01/13	1	119 361			119 503
			01/08 → 08/13			116 148	116 194	119 503
			01/08 → 08/13	– SPOILER –		116 612		
			01/08 → 08/13	8		119 860	119 855	119 503
			09/13 → 07/15	6	119 340			119 503
	T6		08/15 →	6	119 340			119 525
			08/15 →	6	119 340			119 503
New Beetle			01/99 → 08/05	– SPOILER –	116 366	116 607	116 136	
	2		12/11 →	6	119 258			
			03/13 →	6	119 258			
Passat	1		05/73 → 08/80			116 121	116 121	
			05/73 → 08/80	– SPOILER –		116 601		
			05/73 → 08/80	8		119 840	119 840	
		Variant	05/73 → 08/80			116 121	116 121	116 121
			05/73 → 08/80	– SPOILER –		116 601		
			05/73 → 08/80	8		119 840	119 840	116 121
	2		09/80 → 03/88		116 226	116 109	116 109	
			09/80 → 03/88	– SPOILER –	116 301	116 602		
			09/80 → 03/88	8		119 845	119 845	
		Variant	09/80 → 03/88		116 226	116 109	116 109	116 119
			09/80 → 03/88	– SPOILER –	116 301	116 602		
			09/80 → 03/88	8		119 845	119 845	116 119
	3 / 4		04/88 → 09/96	– SPOILER –	116 314	116 607	116 134	
			04/88 → 09/96	8		119 853	119 853	
		Variant	04/88 → 04/97	– SPOILER –	116 314	116 607	116 134	116 121
			04/88 → 04/97	8		119 853	119 853	116 121
	5		10/96 → 05/02	– SPOILER –	116 366	116 607	116 136	
			10/96 → 05/02	8	119 786	119 853	119 850	
			06/02 → 02/05	1	119 321			
			06/02 → 02/05	1	119 326			
		W8	09/01 → 02/05	1	119 321			
			09/01 → 02/05	1	119 326			
		Variant	05/97 → 05/02	– SPOILER –	116 366	116 607	116 136	116 119
			05/97 → 05/02	8	119 786	119 853	119 850	116 119
			06/02 → 08/05	1	119 321			116 119
			06/02 → 08/05	1	119 326			116 119
	6		03/05 → 10/10	6	119 305			
		Variant / SW	09/05 → 10/10	6	119 305			119 515
	7		11/10 → 08/11	6	119 305			
			09/11 → 10/14	6	119 261			
			11/10 → 08/11	6	119 305			119 515
			09/11 → 10/14	6	119 261			
		Alltrack	03/12 → 04/15	6	119 261			119 515
	8		11/14 →	6	119 273			
		Variant / SW	11/14 →	6	119 273			119 518
		Alltrack	05/15 →	6	119 273			119 518
	CC		05/08 → 02/12	6	119 305			
Polo	1		08/75 → 10/81			116 121	116 121	116 121
			08/75 → 10/81	– SPOILER –		116 601		

Flat Blade OE connections

❶ = ❷ = ❸ = ❹ =

OE Flachwischer Verbindungssysteme

❺ = ❻ = ❼ = ❽ =

For/Für				– SPOILER – – HBLADE –				
VOLKSWAGEN (...)								
Polo	1		08/75 → 10/81	❽		119 **840**	119 **840**	116 **121**
	2		11/81 → 06/94			116 **121**	116 **121**	116 **116**
			11/81 → 06/94	– SPOILER –		116 **601**		
			11/81 → 06/94	❽		119 **840**	119 **840**	116 **116**
			11/81 → 06/94			116 **121**	116 **121**	
			11/81 → 06/94	– SPOILER –		116 **601**		
			11/81 → 06/94	❽		119 **840**	119 **840**	
			08/82 → 06/94			116 **121**	116 **121**	116 **121**
			08/82 → 06/94	– SPOILER –		116 **601**		
			08/82 → 06/94	❽		119 **840**	119 **840**	116 **121**
	3		07/94 → 10/01	– SPOILER –		116 **623**	116 **192**	116 **116**
			07/94 → 10/01	❽	119 **711**	119 **848**	119 **848**	116 **116**
		Flight / Classic	09/95 → 08/99			116 **134**	116 **109**	
			09/95 → 08/99	– SPOILER –		116 **607**		
			09/95 → 08/99	❽		119 **853**	119 **845**	
			09/99 →	– SPOILER –		116 **607**	116 **109**	
			09/99 →	❽		119 **853**	119 **845**	
		Variant	09/97 → 08/99			116 **134**	116 **109**	116 **116**
			09/97 → 08/99	– SPOILER –		116 **607**		
			09/97 → 08/99	❽		119 **853**	119 **845**	116 **116**
			09/99 →	– SPOILER –		116 **607**	116 **109**	116 **116**
			09/99 →	❽		119 **853**	119 **845**	116 **116**
	4		11/01 → 09/02	❶	119 **319**			
			11/01 → 09/02	❶	119 **325**			
			10/02 → 06/05	❶	119 **319**			119 **504**
			10/02 → 06/05	❶	119 **325**			119 **504**
	5		07/05 → 08/09	❻	119 **301**			119 **504**
		TDI / GTI Limited Edition	03/07 → 08/09	❻	119 **301**			119 **515**
	6		09/09 →	❻	119 **260**			119 **514**
Santana			08/81 → 03/88		116 **226**	116 **109**	116 **109**	
			08/81 → 03/88	– SPOILER –	116 **301**	116 **602**		
			08/81 → 03/88	❽		119 **845**	119 **845**	
Scirocco			04/74 → 03/81		116 **226**	116 **109**	116 **109**	116 **121**
			04/74 → 03/81	❽		119 **845**	119 **845**	116 **121**
			04/81 → 07/92		116 **218**	116 **126**	116 **126**	116 **121**
			04/81 → 07/92	– SPOILER –		116 **623**		
			04/81 → 07/92	❽		119 **848**	119 **848**	116 **121**
			09/08 →	❻	119 **305**			119 **516**
Sharan	1		08/95 → 05/01		116 **336**			116 **121**
			06/01 → 08/10	❶	119 **383**			
	2		09/10 →	❻	119 **441**			119 **518**
Taro			02/89 →		116 **226**	116 **109**	116 **109**	
Tiguan	1		11/07 → 05/16	❻	119 **296**			119 **504**
	2		06/16 →	❻	NEW 119 **468**			NEW 119 **524**
Touareg	1		02/02 → 09/07	❶	NEW 119 **436**			119 **504**
			10/07 → 03/10	❶	119 **381**			119 **504**
	2		04/10 →	❶	119 **381**			NEW 119 **527**
Touran	1		05/03 → 08/03	❶	119 **383**			
			09/03 → 08/10	❶	119 **383**			119 **502**
			03/06 → 11/06	❶	119 **355**			119 **502**
			12/06 → 08/10	❻	119 **305**			119 **502**
	2		09/10 → 08/15	❻	119 **298**			119 **518**
	3		09/15 →	❻	119 **441**			119 **518**
Transporter	T2		01/67 → 04/79			116 **121**	116 **121**	
	T3		05/79 → 08/90		116 **226**	116 **109**	116 **109**	116 **121**
			05/79 → 08/90	– SPOILER –		116 **602**		
			05/79 → 08/90	❽		119 **845**	119 **845**	116 **121**
	T4		09/90 → 12/03		116 **222**	116 **134**	116 **134**	116 **121**
			09/90 → 12/03	– SPOILER –	116 **314**	116 **607**		
			09/90 → 12/03	❽		119 **853**	119 **853**	116 **121**
	T5		11/03 → 08/13			116 **148**	116 **194**	119 **502**
			11/03 → 08/13	– SPOILER –		116 **612**		
			11/03 → 08/13	❽		119 **860**	119 **855**	119 **502**
			11/03 → 08/13			116 **148**	116 **194**	119 **503**
			11/03 → 08/13	– SPOILER –		116 **612**		
			11/03 → 08/13	❽		119 **860**	119 **855**	119 **503**
			09/13 → 07/15	❻	119 **340**			119 **502**

Flat Blade OE connections

❶ = ❷ = ❸ = ❹ =

OE Flachwischer Verbindungssysteme

❺ = ❻ = ❼ = ❽ =

For/Für			2+3	– SPOILER – – HBLADE –	1+2	1	2	
VOLKSWAGEN (...)								
Transporter	T5		09/13 → 07/15	6	119 **340**			119 **503**
	T6		08/15 →	6	119 **340**			119 **525**
			08/15 →	6	119 **340**			119 **503**
Up			01/12 →	6	119 **260**			119 **516**
Vento			11/91 → 09/98			116 **134**	116 **126**	
			11/91 → 09/98	– SPOILER –	116 **311**	116 **607**		
			11/91 → 09/98	8	119 **729**	119 **853**	119 **845**	
VOLVO								
66			08/75 → 1981			116 **122**	116 **122**	
144 / 162 / 164 / 165			1967 → 1974			116 **122**	116 **121**	
240			02/82 →			116 **121**	116 **121**	
			02/82 →	– SPOILER –		116 **601**		
			02/82 →	8		119 **840**	119 **840**	
			09/82 →			116 **121**	116 **121**	116 **119**
			09/82 →	– SPOILER –		116 **601**		
			09/82 →	8		119 **840**	119 **840**	116 **119**
242			01/74 → 07/79			116 **122**	116 **121**	
			01/74 → 07/79	– SPOILER –		116 **601**		
244			03/79 → 08/82			116 **122**	116 **121**	
			03/79 → 08/82	– SPOILER –		116 **601**		
245			07/79 → 08/82			116 **122**	116 **121**	
			07/79 → 08/82	– SPOILER –		116 **601**		
260			08/74 → 07/84			116 **121**	116 **121**	
			08/74 → 07/84	– SPOILER –		116 **601**		
			03/77 → 07/82			116 **125**	116 **125**	
			08/74 → 07/82			116 **121**	116 **121**	
			08/74 → 07/82	– SPOILER –		116 **601**		
262						116 **125**	116 **125**	
264 / 265			08/75 →			116 **121**	116 **121**	
340 / 343 / 345			01/76 →		116 **226**	116 **109**	116 **109**	
			01/76 →			116 **125**	116 **125**	
360			08/82 → 07/90		116 **226**	116 **109**	116 **109**	
			08/82 → 07/90	– SPOILER –		116 **602**		
			08/82 → 07/90			116 **125**	116 **125**	
440			10/88 →		116 **220**	116 **134**	116 **112**	116 **112**
			10/88 →	8		119 **853**	119 **853**	116 **112**
460			01/90 →		116 **222**	116 **134**	116 **134**	
			01/90 →	– SPOILER –	116 **314**	116 **607**		
			01/90 →	8		119 **853**	119 **853**	
480			07/86 →	8		119 **853**	119 **850**	116 **121**
740			01/82 → 06/84		116 **218**	116 **126**	116 **126**	
			01/82 → 06/84	– SPOILER –		116 **623**		
			01/82 → 06/84	8		119 **848**	119 **848**	
			07/84 →		116 **220**	116 **112**	116 **112**	
			07/84 →	– SPOILER –		116 **604**		
			07/84 →	8		119 **850**	119 **850**	
			07/85 →		116 **220**	116 **112**	116 **112**	116 **119**
			07/85 →	– SPOILER –		116 **604**		
			07/85 →	8		119 **850**	119 **850**	116 **119**
760			07/83 → 07/87		116 **220**	116 **112**	116 **112**	
			07/83 → 07/87	– SPOILER –		116 **604**		
			07/83 → 07/87	8		119 **850**	119 **850**	
			08/87 → 12/90		116 **220**	116 **134**	116 **112**	
			08/87 → 12/90	– SPOILER –	116 **313**	116 **607**		
			08/87 → 12/90	8		119 **853**	119 **850**	
			07/86 → 07/87		116 **220**	116 **112**	116 **112**	116 **121**
			07/86 → 07/87	– SPOILER –		116 **604**		
			07/86 → 07/87	8		119 **850**	119 **850**	116 **121**
			08/87 → 12/90		116 **220**	116 **134**	116 **112**	
			08/87 → 12/90	– SPOILER –	116 **313**	116 **607**		
			08/87 → 12/90	8		119 **853**	119 **850**	
780			03/85 →		116 **220**	116 **112**	116 **112**	
			03/85 →	– SPOILER –		116 **604**		
			03/85 →	8		119 **850**	119 **850**	
			03/85 →		116 **220**	116 **112**	116 **112**	
			03/85 →	– SPOILER –		116 **604**		

Flat Blade OE connections

❶ = ❷ = ❸ = ❹ =

❺ = ❻ = ❼ = ❽ =

OE Flachwischer Verbindungssysteme

For/Für			2 3	– SPOILER – – HBLADE –				
▶ VOLVO (...)								
780			03/85 →	8		119 **850**	119 **850**	
850			06/91 →	– SPOILER –	116 **313**	116 **607**	116 **112**	
			06/91 →	8		119 **853**	119 **850**	
			12/92 → 03/00	– SPOILER –	116 **313**	116 **607**	116 **112**	116 **121**
			12/92 → 03/00	8		119 **853**	119 **850**	116 **121**
940			09/90 →		116 **220**	116 **112**	116 **112**	
			09/90 →	– SPOILER –		116 **604**		
			09/90 →	8		119 **850**	119 **850**	
			09/90 →		116 **220**	116 **112**	116 **112**	116 **119**
			09/90 →	– SPOILER –		116 **604**		
			09/90 →	8		119 **850**	119 **850**	116 **119**
960			09/90 →		116 **222**	116 **134**	116 **134**	
			09/90 →	– SPOILER –	116 **314**	116 **607**		
			09/90 →	8		119 **853**	119 **853**	
			09/90 →		116 **222**	116 **134**	116 **134**	
			09/90 →	– SPOILER –	116 **314**	116 **607**		
			09/90 →	8		119 **853**	119 **853**	
C30			11/06 → 06/09	6	119 **414**			119 **507**
			07/09 → 12/13	6	119 **414**			116 **518**
	E		10/08 → 12/13	6	119 **414**			116 **518**
C70			09/96 → 01/06	– SPOILER –	116 **314**	116 **607**	116 **134**	
			09/96 → 01/06	8		119 **853**	119 **853**	
			1999 → 01/06	– SPOILER –	116 **313**	116 **607**	116 **112**	
			1999 → 01/06	8		119 **853**	119 **850**	
			03/06 → 12/13	6	119 **418**			
S40			04/96 → 01/04		116 **220**	116 **134**	116 **112**	
			04/96 → 01/04	– SPOILER –	116 **313**	116 **607**		
			04/96 → 01/04	8	119 **726**	119 **853**	119 **850**	
			02/04 → 02/06	1	119 **390**			
			03/06 → 08/12	6	119 **414**			
S60			11/00 → 02/04	– SPOILER –		116 **619**	116 **191**	
			11/00 → 02/04	8	119 **764**	119 **860**	119 **853**	
			03/04 → 06/10	2	119 **356**			
			03/04 → 06/10	2	119 **359**			
			07/10 →	6	119 **414**			
S70			12/96 → 11/00	– SPOILER –	116 **313**	116 **607**	116 **112**	116 **121**
			12/96 → 11/00	8		119 **853**	119 **850**	116 **121**
S80			10/98 → 05/03	– SPOILER –		116 **619**	116 **191**	
			10/98 → 05/03	8	119 **764**	119 **860**	119 **853**	
			06/03 → 05/06	2	119 **356**			
			06/03 → 05/06	2	119 **359**			
			06/06 → 08/16	6	119 **414**			
S90			09/96 →		116 **222**	116 **134**	116 **134**	
			09/96 →	– SPOILER –	116 **314**	116 **607**		
			09/96 →	8		119 **853**	119 **853**	
			09/16 →	6	119 **462**			
V40			06/96 → 03/04		116 **220**	116 **134**	116 **112**	
			06/96 → 03/04	– SPOILER –	116 **313**	116 **607**		
			06/96 → 03/04	8	119 **726**	119 **853**	119 **850**	
			07/12 →	6	119 **418**			
	Cross Country		01/13 →	6	119 **418**			
V50			03/04 → 02/06	1	119 **390**			116 **547**
			03/06 → 12/12	6	119 **414**			116 **547**
V60			11/10 → 07/15	6	119 **414**			
			08/15 →	6	119 **414**			116 **516**
	Cross Country		06/15 → 07/15	6	119 **414**			116 **516**
V70			12/96 → 03/00	– SPOILER –	116 **313**	116 **607**	116 **112**	
			12/96 → 03/00	8		119 **853**	119 **850**	
			04/00 → 02/04	– SPOILER –		116 **619**	116 **191**	
			04/00 → 02/04	8	119 **764**	119 **860**	119 **853**	
			04/04 → 09/07	2	119 **356**			
			04/04 → 09/07	2	119 **359**			
			10/07 → 08/16	6	119 **414**			119 **513**
V90			09/96 → 05/98		116 **222**	116 **134**	116 **134**	
			09/96 → 05/98	– SPOILER –	116 **314**	116 **607**		
			09/96 → 05/98	8		119 **853**	119 **853**	
			09/16 →	6	119 **462**			

4

Flat Blade OE connections

❶ = ❷ = ❸ = ❹ =

OE Flachwischer Verbindungssysteme

❺ = ❻ = ❼ = ❽ =

For/Für				– SPOILER – – HBLADE –			
VOLVO (...)							
V90	Cross Country		01/17 →	6	119 **462**		
XC60			09/08 → 12/10	6	119 **414**		119 **511**
			01/11 →	6	119 **414**		116 **540**
XC70			09/00 → 02/04	8	119 **764**	119 **860** 119 **853**	
			03/04 → 09/07	2	119 **356**		
			03/04 → 09/07	2	119 **359**		
			10/07 → 08/16	6	119 **414**		119 **513**
XC90			01/03 → 04/04	– SPOILER –		116 **619** 116 **191**	
			01/03 → 04/04	8	119 **764**	119 **860** 119 **853**	
			05/04 → 05/07	2	119 **356**		
			05/04 → 05/07	2	119 **359**		
			06/07 → 12/10	2	119 **356**		119 **511**
			06/07 → 12/10	2	119 **359**		119 **511**
			01/11 → 02/15	2	119 **356**		116 **540**
			01/11 → 02/15	2	119 **359**		116 **540**
			03/15 →	6	119 **462**		
YUGO							
Florida		x1	09/90 →	8		119 **848**	
Sana			1989 →	8		119 **848** 119 **840**	
ZASTAVA							
101			01/72 →			116 **120** 116 **120**	
125 PZ			01/72 →			116 **119** 116 **119**	
750 / 850			01/72 →			116 **119** 116 **119**	
1100			01/72 →			116 **120** 116 **120**	
1300 / 1500			01/72 →			116 **119** 116 **119**	
Florida		x1	09/90 →			116 **126**	116 **121**
			09/90 →	8		119 **848**	
GTL			01/83 →			116 **120** 116 **120**	
Miami			01/88 →		116 **218**	116 **126** 116 **126**	116 **121**
Sana			01/89 →		116 **218**	116 **126** 116 **126**	116 **121**
Tempo			01/90 →			116 **121** 116 **121**	
Yugo	45		01/81 →			116 **120** 116 **119**	
	55 / 65		01/81 →			116 **120** 116 **120**	
	311 / 513 / ZLC / ZLM		01/83 →			116 **120** 116 **120**	
ZAZ							
2102 Tawarija			01/89 →		116 **220**	116 **112** 116 **112**	
Tavria			01/91 → 06/92			116 **121** 116 **121**	

4

Flat Blade OE connections

❶ = ❷ = ❸ = ❹ =

OE Flachwischer Verbindungssysteme

❺ = ❻ = ❼ = ❽ =

	N°		mm	mm
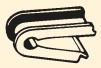				
A	193 588		8	6 x 2
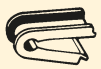				
B	192 397		8	7 x 2,5
C	192 550		8	5,3 x 2
N	192 401		8	7,1 x 2,5
H	192 390		11	7,1 x 2,5
F3	181 694	-	11	-
J2	188 122		-	7,1 x 2,5
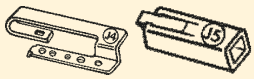				
J4 + J5	119 003		7,1	
R	191 088		11	8 x 2 / 8 x 3
T1	191 177		11	9 x 3
T2	189 336		11	9 x 3
U2	189 335		11	8 x 3
T4	189 073		11	9 x 3
T5	580 801		11	9 x 4
T7	580 804		13,5	12 x 4
T8	580 803		13,5	9 x 4
T15	181 568		11	9 x 4
T16	580 805		11	9 x 4
U	180 808		11	8 x 3 / 9 x 3 / 9 x 4

5

IAM → SWF

BOSCH Aerotwin

3397007563	119351
3397007072 (A072S)	119312
3397007073 (A073S)	119312
3397007079 (A079S)	119415
3397007084 (A084S)	119369
3397007085 (A085S)	119369
3397007088 (A088S)	119414
3397007090 (A090S)	119412/119427
3397007093 (A093S)	119397
3397007094 (A094S)	119371
3397007095 (A095S)	119371
3397007096 (A096S)	119355
3397007099 (A099S)	119404
3397007100 (A100S)	119401
3397007100 (A100S)	119439
3397007115 (A115S)	119332
3397007116 (A116S)	119287
3397007116 (A116S)	119330
3397007117 (A117S)	119403
3397007120 (A120S)	119452
3397007163 (A163S)	119397
3397007187 (A187S)	119298/119305
3397007209 (A209S)	119359
3397007215 (A215S)	119407/119422
3397007218 (A218S)	119413
3397007218 (A218S)	119427
3397007225 (A225S)	119416
3397007245 (A245S)	119385
3397007256 (A256S)	119426
3397007256 (A256S)	119399/119426
3397007290 (A290S)	119292
3397007292 (A292S)	119262
3397007292 (A292S)	119300
3397007294 (A294S)	119387
3397007295 (A295S)	119378
3397007296 (A296S)	119268
3397007297 (A297S)	119297
3397007297 (A297S)	119432
3397007297 (A297S)	119296/119297
3397007299 (A299S)	119290
3397007307 (A307S)	119301
3397007309 (A309S)	119418
3397007309 (A309S)	119431
3397007311 (A311S)	119398
3397007313 (A313S)	119451
3397007385 (A385S)	119452
3397007408 (A408S)	119367
3397007410 (A410S)	119372
3397007414 (A414S)	119265
3397007414 (A414S)	119429
3397007416 (A416S)	119308
3397007420 (A420S)	119289
3397007422 (A422S)	119396
3397007422 (A422S)	119420
3397007424 (A424S)	119392
3397007424 (A424S)	119424
3397007426 (A426S)	119408
3397007428 (A428S)	119454
3397007430 (A430S)	119256
3397007432 (A432S)	119428
3397007452 (A452S)	119291
3397007453 (A453S)	119291
3397007501 (A501S)	119457
3397007502 (A119S)	119456
3397007523 (A523S)	119274
3397007538 (A538S)	119365
3397007540 (A540S)	119281
3397007555 (A555S)	119260
3397007555 (A555S)	119271
3397007557 (A557S)	119441
3397007579 (A579S)	119283
3397007580 (A580S)	119298
3397007581 (A581S)	119442
3397007583 (A583S)	119278
3397007585 (A585S)	119281
3397007586 (A586S)	119437
3397007593 (A642S)	119351
3397007594 (A642S)	119351
3397007620 (A620S)	119261
3397007620 (A620S)	119270
3397007636 (A636S)	119281
3397007637 (A637S)	119257
3397007638 (A638S)	119432
3397007640 (A640S)	119445
3397007644 (A641S)	119444
3397007644 (A641S)	119446
3397007644 (A641S)	119447
3397007644 (A641S)	119448
3397007653 (A642S)	119351
3397007692 (A692S)	119285
3397007696 (A696S)	119255
3397007696 (A696S)	119304
3397007697 (A697S)	119267
3397007854 (A854S)	119435
3397007856 (A856S)	119263
3397007863 (A863S)	119272
3397007868 (A868S)	119269
3397007944 (A944S)	119458
3397009016 (A016S)	119327
3397009016 (A016S)	119370
3397009016 (A016S)	119375
3397009016 (A016S)	119327/119370/119375
3397009017 (A017S)	119259
3397009023 (A208S)	119316
3397009050 (A050S)	119324
3397009051 (A051S)	119303
3397009054 (A054S)	119275
3397009087 (A939S)	119299
3397009087 (A939S)	119430
3397009798 (A798S)	119258

BOSCH Aerotwin (...)

3397009825 (A825S)	119348
3397009843 (A843S)	119472
3397014009 (A009S)	119443
3397014010 (A010S)	119276
3397014010 (A010S)	119277
3397014077 (A077S)	119460
3397014078 (A078S)	119459
3397014115 (A101S)	119336
3397014118 (A104S)	119349
3397014179 (A179S)	119476
3397014204 (A204S)	119473
3397014206 (A206S)	119475
3397014242 (A242S)	119474
3397018960 (A960S)	119449
3397118916 (A916S)	119251
3397118922 (A922S)	119318
3397118923 (A923S)	119322
3397118925 (A925S)	119321
3397118926 (A926S)	119326
3397118927 (A927S)	119319
3397118928 (A928S)	119325
3397118929 (A929S)	119254
3397118929 (A929S)	119284
3397118929 (A929S)	119288
3397118929 (A929S)	119376
3397118929 (A929S)	119294/119363
3397118930 (A930S)	119364
3397118931 (A931S)	119286
3397118931 (A931S)	119286/119328
3397118932 (A932S)	119286
3397118932 (A932S)	119286/119328
3397118933 (A933S)	119323/119350/119353
3397118934 (A934S)	119259
3397118936 (A936S)	119355
3397118937 (A937S)	119355
3397118938 (A938S)	119299
3397118938 (A938S)	119430
3397118938 (A938S)	119299/119360
3397118946 (A946S)	119389
3397118946 (A946S)	119438
3397118948 (A948S)	119381
3397118949 (A949S)	119381
3397118950 (A950S)	119383
3397118951 (A951S)	119384
3397118951 (A951S)	119384/119393
3397118952 (A952S)	119384
3397118953 (A953S)	119282
3397118953 (A953S)	119390
3397118955 (A955S)	119280
3397118955 (A955S)	119357
3397118957 (A957S)	119380
3397118958 (A958S)	119440
3397118962 (A962S)	119402
3397118964 (A964S)	119455
3397118965 (A965S)	119382/119391
3397118966 (A966S)	119356
3397118967 (A967S)	119388/119395
3397118969 (A969S)	119253
3397118969 (A969S)	119354
3397118970 (A970S)	119374
3397118972 (A972S)	119362
3397118973 (A973S)	119362
3397118974 (A974S)	119301
3397118976 (A976S)	119389
3397118977 (A977S)	119394
3397118978 (A978S)	119394
3397118979 (A979S)	119261
3397118979 (A979S)	119305

BOSCH Aerotwin Retro

3397008530 (AR16U)	119840
3397008531 (AR17U)	119840
3397008532 (AR18U)	119845
3397008533 (AR19U)	119848
3397008534 (AR20U)	119850
3397008536 (AR21U)	119853
3397008537 (AR22U)	119855
3397008538 (AR24U)	119860
3397008539 (AR26U)	119865
3397008639 (AR15U)	119835
3397018913 (AR650S)	119783
3397018913 (AR650S)	119865
3397118900 (AR480S)	119710/119711
3397118900 (AR480S)	119848+119848
3397118901 (AR531S)	119725
3397118901 (AR531S)	119853+119845
3397118902 (AR533S)	119725/119728/119729
3397118902 (AR533S)	119853+119848
3397118903 (AR530S)	119786
3397118903 (AR530S)	119853+119853
3397118904 (AR728S)	119725/119740
3397118904 (AR728S)	119855+119848
3397118905 (AR551S)	119741/119742
3397118905 (AR551S)	119855+119850
3397118906 (AR550S)	119293
3397118906 (AR550S)	119743
3397118906 (AR550S)	119855+119853
3397118907 (AR607S)	119760
3397118907 (AR601S)	119860+119840
3397118908 (AR604S)	119761
3397118908 (AR604S)	119860+119845
3397118909 (AR607S)	119761
3397118909 (AR607S)	119762
3397118909 (AR607S)	119860+119848
3397118910 (AR606S)	119744
3397118910 (AR606S)	119746
3397118910 (AR606S)	119763
3397118910 (AR606S)	119860+119850
3397118911 (AR653S)	119780
3397118911 (AR653S)	119865+119840
3397118912 (AR813S)	119865+119845

BOSCH Aerotwin Retro (...)

3397118913 (AR650S)	119865+119865
3397118984 (AR552S)	119855+119840
3397118986 (AR532S)	119726
3397118986 (AR532S)	119853+119850
3397118990 (AR566S)	119848+119845
3397118991 (AR991S)	119782
3397118991 (AR991S)	119865+119855
3397118992 (AR992S)	119853+119853
3397118993 (AR503S)	119739
3397118993 (AR503S)	119850+119850
3397118994 (AR450S)	119845+119845
3397118995 (AR502S)	119739
3397118995 (AR502S)	119850+119845
3397118997 (AR997S)	119781
3397118997 (AR997S)	119860+119855

BOSCH Rear Program

3397004002 (453)	116602
3397004561 (H425)	116109
3397004565 (H341)	116119
3397004595 (H595)	116116
3397004629 (H301)	116520
3397004633 (H502)	116570
3397004802 (H840)	116530
3397006864 (A230H)	119521
3397008005 (A280H)	119522
3397008006 (A330H)	119504
3397008009 (A400H)	119502
3397008045 (A281H)	119509
3397008045 (A281H)	119515
3397008045 (A281H)	119523
3397008047 (A401H)	119507
3397008050 (A380H)	119511
3397008051 (A425H)	119508
3397008055 (A475H)	119509
3397008192 (A351H)	119513
3397008634 (A282H)	119514
3397008713 (A331H)	119518
3397008998 (A403H)	119525
3397011430 (H352)	116532
3397011667 (H357)	116533
3397011677 (H240)	116506
3397018407 (H530)	116134
3397018422 (H550)	116166
3397018500 (H420)	116122
3397018545 (H480)	116126
3397018562 (H500)	116112
3397018612 (H400)	116126
3397018701 (H340)	116119
3397018802 (H280)	116116

BOSCH Twin

3397001013 (013)	116218
3397001014 (014)	116222
3397001269 (269)	116604+116109
3397001271 (271S)	116616+116148
3397001272 (272S)	116616+116148
3397001273 (273S)	116616+116148
3397001274 (274S)	116616+116148
3397001280 (280)	116310
3397001342 (342)	116134+116109
3397001346 (346)	116166+116112
3397001361 (361)	116112+116126
3397001367 (367S)	116616
3397001367 (367S)	116616+116615
3397001369 (269S)	116307
3397001369 (269S)	116604+116109
3397001371 (342S)	116311
3397001371 (342S)	116606+116109
3397001371 (342S)	116607+116109
3397001372 (346S)	116348
3397001372 (346S)	116606+116112
3397001394 (394S)	116339
3397001416 (375S)	116121
3397001417 (837S)	116226
3397001417 (837S)	116301
3397001418 (298S)	116218
3397001420 (790S)	116220
3397001422 (715S)	116314
3397001424 (280S)	116311
3397001425 (899S)	116222
3397001425 (899S)	116606+116166
3397001463 (347S)	116313
3397001465 (465S)	116218
3397001465 (465S)	116623+116192
3397001472 (472)	116109+116119
3397001475 (475S)	116606+116112
3397001488 (488S)	116148+116126
3397001488 (488S)	116183+116176
3397001488 (488S)	116619+116126
3397001494 (494)	116141+116126
3397001532 (532)	116336
3397001539 (539)	116334
3397001566 (566)	116126+116109
3397001582 (582S)	116348
3397001582 (582S)	116606+116166
3397001583 (583S)	116136
3397001583 (583S)	116314
3397001583 (583S)	116366
3397001584 (584S)	116311
3397001584 (584S)	116351
3397001682 (682)	116166+116134
3397001684 (450CS)	116301
3397001725 (725)	116154
3397001727 (727)	116166+116126
3397001728 (728S)	116606+116126
3397001801 (801)	116191
3397001801 (801)	116192
3397001801 (801)	116148+116166
3397001802 (801S)	116606+116112
3397001802 (801S)	116612+116191

BOSCH Twin (...)

3397001802 (801S)	116619+116191
3397001803 (803)	116137+116109
3397001813 (813S)	116618+116126
3397001866 (866)	116131
3397001866 (866)	116133
3397001866 (866)	116131+116133
3397001909 (909)	116342
3397001909 (909)	116343
3397002409 (409)	116148
3397002873 (873)	116109
3397004579 (400U)	116122
3397004579 (400U)	116126
3397004579 (400U)	116601
3397004581 (450U)	116109
3397004581 (450U)	116124
3397004581 (450U)	116125
3397004581 (450U)	116602
3397004582 (480U)	116126
3397004583 (500U)	116112
3397004583 (500U)	116129
3397004584 (530U)	116134
3397004585 (550U)	116141
3397004585 (550U)	116166
3397004586 (600U)	116148
3397004587 (650U)	116137
3397004587 (650U)	116140
3397004590 (500US)	116604
3397004591 (550US)	116606
3397004592 (600US)	116615
3397004592 (600US)	116619
3397004593 (650US)	116618
3397004595 (H595)	116116
3397004755 (H341)	116119
3397004756 (H380)	116120
3397005029 (450C)	116226
3397010211 (704)	116336
3397010280 (600US)	116612
3397010280 (610S)	116194
3397010280 (610S)	116148+116166
3397010280 (610S)	116612+116194
3397011352 (530US)	116607
3397012368 (368)	116135
3397012455 (455)	116168
3397012474 (474)	116137
3397012514 (952)	116120
3397018400 (530)	116607
3397018401 (532S)	116607
3397018420 (550)	116166
3397018425 (552)	116606
3397018541 (480S)	116623
3397018547 (547)	116623
3397018560 (501)	116112
3397018601 (H 380)	116120
3397018610 (400)	116601
3397018702 (340)	116119
3397110040 (040)	116121
3397110041 (041)	116226
3397110298 (475)	116218
3397110375 (375)	116121
3397110401 (280C)	116116
3397110715 (715)	116222
3397110790 (790)	116220
3397110837 (837)	116226
3397110899 (899)	116166
3397110938 (938)	116124
3397112112 (112)	116220
3397112113 (113)	116166
3397112202 (202)	116119
3397112308 (308)	116337
3397118200 (700)	116140/132701
3397118202 (701)	116137+116112
3397118203 (702)	116622+116618
3397118204 (702S)	116622
3397118204 (702S)	116622+116618
3397118205 (703S)	116365
3397118302 (602S)	116616+116148
3397118303 (604S)	116346
3397118303 (604S)	116619+116126
3397118305 (606S)	116340
3397118305 (606S)	116615+116112
3397118307 (608)	116148+116166
3397118308 (608S)	116337
3397118308 (608S)	116619+116166
3397118309 (609)	116341
3397118310 (606)	116148+116134
3397118320 (650)	116137
3397118321 (651)	116153
3397118321 (651)	116162
3397118321 (651)	116153+116162
3397118324 (653)	116137+116126
3397118325 (653S)	116137+116126
3397118325 (653S)	116185+116174
3397118325 (653S)	116618+116126
3397118327 (652S)	116618+116119
3397118327 (652S)	116618+116619
3397118334 (657S)	116352
3397118405 (533)	116310
3397118427 (552S)	116606+116126
3397118450 (575)	116612+116148
3397118451 (575)	116304
3397118451 (575S)	116612+116148
3397118452 (576)	116141+116109
3397118506 (450S)	116301
3397118541 (480S)	116623
3397118542 (481)	116126+116109
3397118543 (481S)	116218
3397118565 (503)	116112+116126
3397118566 (503S)	116335
3397118566 (503S)	116604+116126
3397118600 (380)	116120

BOSCH Twin (...)

3397118800 (260)	116117

CHAMPION Aerovantage

K48B	116126+116109
K53B	116134+116126
K55C	116310
K58D	116141+116126
K58E	116141+116109
K58G	116141+116126
K60	116341
K60A	116148+116166
K60B	116340
K65D	116153+116154
K65G	116153+116162
K70A	116336
KF50	119318
KF50Z	119316
KF53	119321
KF53B	119319
KF53B	119355
KF53C	119301
KF53P	119301
KF55	119323
KF55	119350
KF55	119353
KF55D	119328
KF55F	119362
KF58E	119369
KF58Z	119369
KF60	119357
KF60A	119356
KF60B	119291
KF60B	119312
KF60C	119363
KF60E	119355
KF60F	119355
KF60X	119364
KF60Y	119291
KF60Y	119312
KF60Z	119359
KF61P	119305
KF62H	119371
KF65	119381
KF65	119415
KF65C	119380
KF65E	119390
KF65F	119393
KF65G	119384
KF65H	119394
KF65J	119412
KF65K	119388
KF65K	119395
KF65L	119394
KF65M	119385
KF65P	119414
KF65Y	119394
KF70	119383
KF70B	119402
KF70C	119382
KF70C	119391
KF70D	119398
KF70E	119401
KF70F	119389
KF70G	119399
KF70Z	119399
KF75D	119452
KF80	119451
MC60	116135
MC61	116135
R29	116116
R40	116126
R55	116342
R65C	116334
R65D	116131+116133
SF53A+SF48A	119325
SF53A+SF48A	119355
SF53A+SF48B	119325
SF55A+SF45A	119328
SF60A+SF48B	119355
SF60A+SF60A	119360
SF60A+SF60A	119361
SF60B+SF45A	119355
SF65A+SF51A	119390
SK45	116301
SK45M	116126
SK48	116218
SK48A	116623+116192
SK51	116604+116112
SK51A	116604+116126
SK51B	116604+116109
SK53	116314
SK53A	116313
SK53B	116311
SK53C	116623+116126
SK53V	116607+116136
SK53W	116607+116192
SK55	116606+116166
SK55A	116348
SK55M	116606 (x2)
SK60A	116619+116166
SK60B	116339
SK60C	116612+116191
SK60H	116148+116126
SK65	116352
SK65A	116618+116619
SK65H	116618+116126
SX70	116622
X26	116117
X29	116116
X29P	116510
X29P	116520

CHAMPION Aerovantage (...)

X29P	116530
X29R	116116
X33	116119
X33R	116119
X36	116119
X36P	116119
X38	116120
X38R	116120
X41	116126
X41P	116550
X41R	116126
X41T	116126
X43	116124
X45	116109
X45R	116109
X45T	116109
X48	116126
X48R	116126
X51	116112
X51R	116112
X51T	116112
X53	116134
X53R	116134
X55	116166
X55T	116166
X58	116141
X60	116148
X65	116137
X70	116140
XS48	116109

CHAMPION Aerovantage Hybrid

AHL35	116172
AHL40	116174
AHL45	116176
AHL48	116177
AHL50	116178
AHL55	116180
AHL60	116183
AHL65	116185

CHAMPION Contact

DXL50+DXL50	119318
DXL53+DXL48	119319
DXL53+DXL48	119355
DXL53+DXL48A	119301
DXL53+DXL53A	119321
DXL53B+DXL48B	119301
DXL53C+DXL53C	119303
DXL55+DXL40B	119362
DXL55+DXL45	119328
DXL55+DXL53C	119292
DXL58+DXL38	119289
DXL58A+DXL45	119369
DXL60+DXL38	119300
DXL60+DXL43B	119298
DXL60+DXL48A	119305
DXL60+DXL55	119356
DXL60A+DXL35	119290
DXL60A+DXL40A	119378
DXL60A+DXL45	119305
DXL60A+DXL45	119355
DXL60A+DXL48A	119355
DXL60A+DXL48B	119355
DXL60A+DXL50A	119294
DXL60A+DXL60A	119360
DXL60B+DXL48B	119291
DXL60B+DXL48B	119312
DXL60B+DXL48B	119363
DXL63+DXL43	119371
DXL65+DXL38	119412
DXL65+DXL60	119407
DXL65+DXR58A	119388
DXL65A+DXR58A	119395
DXL65B+DXL43	119394
DXL65B+DXL48C	119418
DXL65C+DXL40	119385
DXL65C+DXL43	119394
DXL65C+DXL48	119393
DXL65C+DXL48A	119384
DXL65C+DXL50	119390
DXL65C+DXL53C	119422
DXL65C+DXL55	119416
DXL65C+DXL65C	119381
DXL65C+DXR65C	119415
DXL65D+DXL50	119414
DXL65D+DXL50A	119296
DXL65D+DXR65D	119404
DXL70+DXL53C	119397
DXL70+DXL55	119399
DXL70+DXR60	119382
DXL70+DXR60	119391
DXL70+DXR65	119398
DXL70+DXR65	119401
DXL70A+DXL70A	119389
DXL70C+DXR63	119402
DXL70C+DXR70C	119383
DXL75+DXR65	119452
DXR50+DXR50	119316
DXR53+DXR48	119325
DXR53+DXR48	119355
DXR55+DXR40B	119362
DXR55+DXR45	119328
DXR58A+DXR45	119369
DXR60+DXR55	119359
DXR60A+DXR45	119355
DXR60A+DXR48A	119355
DXR60A+DXR48B	119355
DXR60A+DXR60A	119361
DXR60B+DXR48B	119291
DXR60B+DXR48B	119312

CHAMPION Contact (...)

DXR60B+DXR48B	119364
DXR63+DXR43	119371
DXR65B+DXR43	119394
DXR65C+DXR43	119394
DXR65C+DXR48A	119384
DXR65C+DXR50	119390
DXR65C+DXR65C	119381
DXR70+DXR53C	119397
RXU41	119840
RXU43	119840
RXU45	119845
RXU48	119848
RXU51	119850
RXU53	119853
RXU55	119855
RXU55+RXU55	119293
RXU60	119860
RXU65	119865
RXU70	119865

CHAMPION Economy

X33E	116119
X36E	116119
X38E	116120
X41E	116126
X43E	116124
X45E	116109
X48E	116126
X51E	116112
X53E	116134
X55E	116166
X60E	116148

CHAMPION Venturi

VX45	116602
VX48	116623
VX51	116604
VX53	116607
VX55	116606
VX60	116619

DENSO

DF001	119319
DF002	119305
DF004	119301
DF008	119323
DF009	119332
DF012	119321
DF014	119353
DF017	119330
DF019	119363
DF021	119356
DF022	119384
DF026	119393
DF027	119367
DF031	119412
DF032	119399
DF034	119318
DF035	119360
DF036	119385
DF037	119414
DF038	119402
DF043	119308
DF045	119451
DF046	119454
DF048	119398
DF055	119424
DF103	119355
DF105	119401
DF106	119394
DF107	119383
DF110	119328
DF111	119415
DF113	119403
DF115	119381
DF116	119380
DF118	119395
DF123	119389
DF124	119312
DF125	119362
DF128	119391
DF129	119357
DF140	119390
DF141	119404
DF144	119455
DF149	119452
DM-035	116119/116540
DM-038	116120
DM-040	116126
DM-043	116124
DM-045	116109
DM-048	116126
DM-050	116112
DM-053	116134
DM-055	116166
DM-540	116126
DM-548	116623
DM-550	116112
DM-553	116134
DM-555	116166
DM-560	116148
DM-565	116137
DM-648	116192
DM-653	116136
DMC-045	116109
DMC-550	116112
DMS-548	116623
DMS-550	116604
DMS-553	116607
DMS-555	116606
DMS-560	116619
DMS-565	116618

DENSO (...)

DR-012	116116
DR-014	116119
DR-015	116120
DR-016	116126
DR-017	116124
DR-018	116109
DR-019	116126
DR-020	116112
DR-021	116134
DR-022	116166
DR-024	116148
DR-026	116137
DR-216	116126
DR-217	116126
DR-218	116129
DR-219	116129
DR-220	116129
DR-238	116120
DR-240	116126
DR-243	116126
DR-245	116129
DR-248	116129
DR-250	116129
DR-253	116134
DR-255	116166
DR-316	116126
DR-317	116126
DR-318	116129
DR-319	116129
DR-321	116129
DR-338	116120
DR-340	116126
DR-343	116126
DR-345	116129
DR-348	116129
DR-350	116129
DR-353	116134
DR-355	116166

KCW

KWF-916	119840
KWF-916R	119840
KWF-917	119840/119845
KWF-917R	119840/119845
KWF-918	119845
KWF-918R	119845
KWF-919	119848
KWF-919R	119848
KWF-920	119850
KWF-920R	119850
KWF-921	119853
KWF-921R	119853
KWF-922	119855
KWF-922R	119855
KWF-924	119860
KWF-924R	119860
KWF-926	119865
KWF-926R	119865

NWB

27-013	116116
27-014	116116
27-015	116120
27-016	116126
27-017	116109
27-018	116109
27-018V	116109
27-019	116126
27-019V	116126
27-020	116112
27-0201	116112
27-020V	116112
27-021	116134
27-021V	116134
27-022	116166
27-024	116148
27-026	116137
27-117	116125
27-118	116109
27-119	116112
27-214	116116
27-217	116125
27-218	116125
27-218V	116125
27-219	116129
27-220	116112
27-221	116134
27-315	116109
27-418	116109
27-419	116126
27S-019	116623
27S-020	116604
27S-021	116607
27S-022	116606
55-SW6	116140
56-WW4	116140
ER55B	116125
EU-016	116126
EU-018	116109
EU-019	116126
EU-020	116112
EU-021	116134
EU-022	116166
EU-424	116168
EU-519	116126
EU-520	116112
EU-521	116607
EU-522	116606
EU-524	116619
EU-526	116137
EU-619	116192

NWB (...)

EU-621	116136
EUS-519	116623
EUS-520	116604
EUS-521	116607
EUS-522	116606
EUS-524	116619
EUS-526	116618

TRICO ExactFit

EB5345	119319
EB5345	119322
EB5350	119321/119322
EB5545	119328
EB6048	119312
EB6545	119355/119363/119384/119394
EB6548	119393
EB6565	119381
EB7060	119402
EB7070	119389/119383
EC480L	116126
EC480R	116126
EC530L	116134
EC530R	116134
EC550L	116166
EC550R	116166
EF250	116117
EF280	116116
EF281	116116
EF300	116530/116550
EF301	116520
EF330	116119
EF331	116116
EF350	116116
EF351	116116
EF353	116540
EF380	116120
EF381	116120
EF400	116126
EF401	116126
EF402	116126
EF403	116126
EF404	116550
EF430	116126
EF431	116126
EF450	116109
EF451	116109
EF452	116109
EF453	116109
EF480	116126
EF481	116126
EF482	116126
EF500	116112
EF501	116112
EF502	116112
EF503	116112
EF504	116112
EF505	116112
EF530	116134
EF550	116166
EF551	116166
EF552	116166
EF553	116166
EF580	116141
EF600	116148
EF601	116135
EF602	116153
EF650	116137
EF652	116352
EF700	116140
EF701	116336
EF702	116336
EF703	116365
ER280G	116116
ER700	116342
ER700	116131+116133
ES450L	116602
ES450R	116602
ES480L	116623
ES480R	116623
ES500L	116604
ES500R	116604
ES501L	116604
ES530L	116607
ES530R	116607
ES532L	116607
ES532R	116607
ES550L	116606
ES550R	116606
ES580L	116339/116141
ES580R	116141
ES600L	116619
ES600R	116619
ES601L	116616
ES601R	116616
ES650L	116618
ES650R	116618
ET6456	116334

TRICO Innovision

NG400	119840
NG430	119840
NG450	119845
NG480	119848
NG500	119850
NG530	119853
NG550	119855
NG580	119855
NG600	119860
NG650	119865
NG700	119865

TRICO Neoform

NF400	119840
NF4014	119396
NF406	119362
NF407	119385
NF407	119427
NF409	119429
NF430	119840
NF436	119394
NF439	119298
NF450	119845
NF4514	119287
NF4514	119408
NF456	119369
NF459	119298
NF480	119848
NF487	119363
NF489	119355
NF500	119850
NF506	119322
NF507	119318
NF509	119414
NF530	119853
NF536	119319
NF537	119395
NF539	119322
NF550	119855
NF5514	119403
NF5515	119259
NF554	119403
NF555	119323
NF556	119328
NF557	119367
NF588	119357
NF600	119860
NF6014	119330
NF606	119355
NF606	119363
NF607	119363
NF608	119357
NF609	119296
NF650	119865
NF6514	119396
NF6514	119420
NF654	119403
NF656	119427
NF657	119428
NF659	119427
NF700	119865
NF706	119391
NF707	119391
NF709	119452

TRICO Teflon Blade

TEF280	116116
TEF350	116119
TEF380	116120
TEF400	116126
TEF401	116126
TEF430	116124
TEF450	116109
TEF451	116109
TEF45SL	116602
TEF45SR	116602
TEF480	116126
TEF48CL	116192
TEF48CR	116192
TEF48SL	116623
TEF48SR	116623
TEF500	116112
TEF501	116112
TEF50SL	116604
TEF50SR	116604
TEF530	116134
TEF53CL	116136
TEF53CR	116136
TEF53SL	116607
TEF53SR	116607
TEF550	116166
TEF55CL	116191
TEF55CR	116191
TEF55SL	116606
TEF55SR	116606
TEF580	116141
TEF600	116148
TEF60SL	116619
TEF60SR	116619
TEF650	116137
TEF65SL	116618
TEF65SR	116618
TEF700	116140

OES → SWF

ALFA ROMEO

50508583	119427
50508585	119427
50509398	119298
50509400	119298
50514916	119369
50514917	119369
50516364	119362
50516542	119362
50516546	119362
50516547	119362
60690113	119369
60699862	119369
71802624	119741
71805141	119369

AUDI

1955425A	119260
1J0998003	119251
1J0998003	119725
1J0998003	119728
2K1955425	119355
2K1955426	119355
4B0998002	119323
4B0998002	119743
4B1955425C	119323
4B1955425C	119350
4B2955425C	119327
4B2955425C	119370
4B2998002	119370
4B7955425G	119323
4B7955425G	119323
4B7955425L	119323
4B7955425L	119323
4B8955425H	119370
4B8955425M	119370
4E0998002	119358
4F1955425E	119259
4F1955425F	119259
4F1955426C	119259
4F1998002	119259
4F1998002A	119259
4F2955426C	119259
4F2955426C	119259
4F2955426F	119259
4G1955425	119432
4G1955425A	119432
4G1998002A	119432
4G8955425B	119432
4G9955425	119519
4H1955425A	119437
4H1955426B	119437
4H2955425B	119437
4H2955426B	119437
4L1955425B	119422
4L1955426A	119422
8F1955426	119432
8F1955426A	119432
8H1955426C	119350
8H2955425B	119327
8J1955425A	119292
8J1955426A	119292
8J2955425A	119292
8J2955426A	119292
8K1955425	119297
8K1955426	119297
8K1998002	119297
8K9955425	119519
8N1955425D	119322
8N1955425E	119292
8N2955408D	119315
8P0998002	119363
8P0998002A	119363
8P1955425F	119363
8P1955425H	119276
8P1955426F	119363
8P2955425H	119364
8P2955426H	119364
8P2998002A	119364
8P7955426	119276
8R0955425	119517
8R1955425B	119297
8R1955426B	119297
8T1955425A	119296
8T1955426A	119296
8U0955425	119519
8U1955425	119297
8U1955426	119297
8X1955425	119260
8X1955425A	119260
8X1955426	119260
8X1955426A	119260
8X2955426	119260
8X2955426A	119260
8X4955425	119517
8Z1955425F	119449

BENTLEY

3W2955425B	119329

BMW

61610034739	119374
61610034741	119374
61610037009	119745
61610038893	119268
61610039697	119746
61610415881	119291
61610415882	119291
61610420549	119318
61610420550	119316
61610427668	119312
61610431463	119280
61612147361	119274

BMW (...)

61612147365	119274
61612156543	119742
61612158219	119284
61612159627	119284
61612159629	119283
61612163749	119274
61612183576	119282
61612183591	119282
61612209047	119351
61612209051	119351
61612219147	119255
61612349870	119277
61612358552	119431
61617049186	119357
61617049187	119357
61617066331	119280
61617066332	119280
61617118216	119312
61617118223	119312
61617122140	119318
61617122141	119318
61617156483	119291
61617170570	119291
61617198668	119312
61617198669	119312
61619069197	119726
61627138508	119522
61627161029	119511

CADILLAC

15930910	119253

CHEVROLET

22846938	119762
92231676	119762
95228809	119352
95228810	119352
95228811	119352
95228812	119352
95423458	119278
95423459	119278

CITROEN

642332	119408
642333	119408
642336	119389
642336	119426
642337	119389
642338	119389
642338	119426
642339	119389
642345	119429
642349	119429
642361	119416
642370	119454
642371	119454
642381	119378
642383	119378
6423C4	119396
6423C5	119396
6423C8	119396
6423C9	119396
6423H5	119447
6423H5	119452
6423H6	119452
6423H7	119452
6423J2	119330
6423J3	119330
6423J6	119396
6423J7	119287
6423K0	119378
6426PC	119451
6426PE	119451
6426PJ	119391
6426PK	119393
6426PW	119416
6426PX	119416
6426XF	119391
6426XG	119391
6426YA	119389
6426YC	119389
6426YP	119393
6426YQ	119393
6426ZE	119415
6426ZF	119415

CITROËN

642301	116183+116179
642305	116183+116179
642332	119408
642333	119408
642334	119520
642336	119389
642336	119426
642337	119389
642338	119389
642338	119426
642339	119389
642345	119429
642349	119429
642361	119416
642370	119454
642371	119454
642381	119378
642383	119378
6423000	119287
64230000	119287

CITROEN

1609240380	119447
1609967180	119447

CITROËN

1609240380	119447
1609428680	119458
1609428880	119458
1609429280	119458
1611558080	119458
6423C4	119396
6423C5	119396
6423C8	119396
6423C9	119396
6423H5	119452
6423H5	119447
6423H7	119452
6423J2	119330
6423J3	119330
6423J6	119396
6423J7	119287
6423K0	119378
6426PC	119451
6426PE	119451
6426PJ	119391
6426PK	119393
6426PW	119416
6426PX	119416
6426XF	119391
6426XG	119391
6426YP	119393
6426YQ	119393
6426ZE	119415
6426ZF	119415

DAIHATSU

8524287401	116513
8524297401	116513

FIAT

51747584	119371
51747585	119371
51757532	119298
51761284	119367
51761286	119367
51770373	119372
51770375	119372
51787567	119290
51787569	119290
51834996	119290
51834998	119290
51843623	119262
51843624	119262
0051847025	119371
51847025	119371
0051847026	119371
51847026	119371
51868149	119378
51868149	119378
51868150	119378
71805145	119290
517014240	119412
517014250	119412
1340685080	119416
1340686080	119416
1371264080	119408
1371266080	119408

FORD

726328	119428
1105327	119710
1354282	119740
1384643	119452
1465888	119394
1473407	119452
1478401	119452
1478402	119452
1478404	119452
1515059	119378
1515085	119378
1537074	119384
1537084	119418
1537086	119378
1537086	119439
1537087	119439
1537389	119428
1537389	119428
1537393	119428
1680496	119452
1680504	119439
1680505	119439
1680510	119452
1680513	119378
1680513	119439
1680514	119378
1680514	119439
1698010	119444
1698018	119444
1726328	119428
1730302	119444
1730302	119445
1730303	119445
1752000	119448
1752002	119448
1769707	119443
1769709	119443
1788433	119443
1790406	119448
1852939	119460
1853024	119460
5176786	119439
5176822	119439
7S7117528AA	119418
7S7117B437AA	119418
AM51-17528-AB	119444
AM51-17B437-AB	119444
AM5JS17528AA	119444

FORD (...)

AM5J-S17528-AA	119444
BK31-17528-EC	119460
BK31-17528-FA	119460
DS73 17402 BA	119523
DS73 17528 AC	119336
DS73 17528 BC	119336
DT11-17528-AB	119335
DT11-17B437-AB	119335
ET76 17528 AA	119459
ET76 17528 CA	119459

HONDA

76620SWAG11	119780
76620TF0G01	116185+116172
76630SWAA01	119780
76630TF0G01	116185+116172

HYUNDAI

98350-1J000	119278
98350-1P000	119278
98350-2L000	119298
98360-1G000	116532
98360-1J000	119278
98360-1P000	119278
98360-2L000	119298
98850-1J000	116513
98850-1J001	116513
L98350-C8000	116183+116174
L98360-1S000	116183+116174

IVECO

5801607103	119311

JAGUAR

C2Z2268	119376
C2Z2269	119376
GJA8960BB	119254

JEEP

52028679	119525
52028681	119525

KIA

98350-1G000	119744
98350-1H300	119761
98350-1P000	119278
98350-2L000	119298
98360-1H400	119761
98360-1P000	119278
98360-2F900	119744
98360-2L000	119298
98850-2K000	116513

LANCIA

51757532	119298
51833653	119262
51833654	119262
71805146	119289

LAND ROVER

LR008818	119294
LR008820	119294
LR018367	119293
LR018368	119293
LR018436	119294
LR018459	119294
LR025117	119256
LR027672	119256
LR056309G	119294

MAZDA

151263	119319
151265	119325
BBM567330	119761
BBM5-67-330	119761
BHS267330	119761
BHS367330	119761
BP4K-67330B	119319
BP4L-67330B	119319
BPP267330	119761
BPP2-67-330	119761
C247-67-330	116513
G21B-67-330	116513
GS1D-67-330	116183+116174
GS1E-67-330	116532
GS1E-67-330	116183+116174
GS2A-67-330	116513
GS2A-67-330	116532
KD47-67-330	116532

MERCEDES

1668201045	119435
1688200245	119782
1698200145	119388
1698200145	119395
1698200245	119395
1718200045	119354
1718200145	119324
1768200545	119521
1978200645	119252
2038201445	119375
2038201545	119353
2048201145	119299
2048201345	119286
2048203145	119348
2058200545	119521
2118201445	119381
2128201045	119430
2128201745	119430
2468200145	119264
2468200245	119264
2468201245	119264
4148200245	119388
A0018203045	119398
A0018203145	119398
A0018203445	119407
A0018203545	119407

MERCEDES (...)

A0018203945	119407
A1698200145	119388
A1698200145	119395
A1698200245	119395
A1698200845	119395
A1698201245	119395
A1718200045	119354
A1718200145	119324
A1718200545	119354
A1768200545	119521
A1768204300	119473
A2038201445	119375
A2038201545	119353
A2048200145	119275
A2048201145	119299
A2048201345	119286
A2048203145	119348
A2058200545	119521
A2058205700	119472
A2118201445	119381
A2128201045	119430
A2128201745	119430
A2138205701	119474
A2208201345	119438
A2208201545	119438
A2218200245	119438
A2218200645	119389
A2218200745	119389
A2468200145	119264
A2468200245	119264
A2468201245	119264
A2468201245	119264
A2468202700	119475
A2518200545	119397
A2518200645	119397
A4148200245	119388
A4478205400	119476

MINI

61610038597	119257
61610039343	119263
61617347623	116506
61629809964	119523

NISSAN

28890JD900	119300
28890JD910	119300

OPEL

1272004	119385
1272004	119385
1272005	119385
1272010	119281
1272011	119281
1272013	119281
1272023	119442
1272026	119281
1272027	119281
1272028	119281
1272049	116533
1272066	119446
1272102	119265
1272328	119385
1272329	119328
1272330	119328
1272339	119512
1272346	116183+116176
6272271	119781
6272279	119328
6272282	119399
6272288	119507
6272314	119739
13256920	116514
13256926	116533
93189190	119385
93189190	119385

PEUGEOT

642321	119452
642322	119452
642330	119408
642331	119408
642344	119429
642348	119429
642374	119394
642375	119394
642385	119457
642386	119457
6423A4	119394
6423A5	119401
6423A6	119452
6423A9	119429
6423B4	119785
6423G0	119281
6423G1	119281
6423N6	119281
6423N7	119281
6423N8	119281
6423N9	119281
6426PR	119416
6426PS	119416
6426PS	119416
6426SQ	119382
6426SR	119382
6426SY	119389
6426SZ	119389
6426TA	119389
6426TC	119389
6426VH	119401
6426VH	119401
6426VJ	119401
6426YV	119394
6426YW	119394

PEUGEOT (...)	
1608392780	119265
1608392780	119265
1608392980	119265
1612432380	119334

PORSCHE	
95862893900	119381
95862894100	119381
99662890108	119267
95B.998.001	119338

RENAULT	
7701064038	119378
7701064040	119378
7701068753	119392
7701068755	119392
7701071164	119330
7711224584	119285
7711230011	119380
7711230017	119455
7711230018	119402
7711236181	119402
7711421437	119330
7711421438	119332
7711421439	119403
7711421795	119378
7711424718	119420
287909786R	119520
288901164R	119269
288901286R	119285
288901286R	119285
288901421R	119456
288902484R	119456
288902593R	119287
288904087R	119378
288904355R	119296
288904409R	119296
288905309R	119378
288905351R	119304
288905401R	119313
288905450R	119287
288905749R	119402
288905755R	119330
288905811R	119313
288907261R	119378
288907741R	119760
288907867R	119288
288907953R	119760
288908041R	119330
288908085R	119330
288908409R	119304
288908536R	119296
288908630R	119402
288909504R	119431
288909690R	119287
288909916R	119392

SAAB	
5582531	119727
5582549	119727
12778383	119308
12781786	119424

SEAT	
1P0455425B	119404
1P0955425B	119404
1P0955426B	119404
1S1955425	119260
1S6955427	119516
4B0998001	119378
4B1955425C	119378
5F1955425	119271
5F1955426	119271
5F4955427A	119518
5M0955427A	119518
5M0998002	119441
5P0998002A	119440
6J1955425	119378
6J1955426	119378
7M3955426A	119383
7M3955426B	119383
7N1955425	119441
7N1955426	119441

SKODA	
1J1955425B	119321
1J2955426B	119326
1J2955426B	119326
1S1955425	119260
1S1955426	119260
1S6955427	119516
2K1955425	119355
2K1955426	119355
3B1955426B	119321
3B2955425E	119326
3U1998001	119321
3U1998001	119786
5C1955425	119258
5E1955425	119270
5E1955426	119270
5F1955425	119271
5F1955426	119271
5J1998001	119303
5J2998001	119303
5L1955425	119305
5L1955426	119305

SMART (MCC)	
A4518240426	119387

SUZUKI	
3834058J00	116513

TOYOTA	
8524205080	116513
8524205110	116513

TOYOTA (...)	
8524205210	116513
8524260071	116532
8524260090	116532
05018407AA	116513
85212-42110	116183+116174
85212-47030	116185+116174
85212-53081	116185+116178
85212-68050	116185+116174
85222-05070	119365
85222-05080	119365
85222-0D120	116187
85222-0H020	119334
85222-42110	116183+116174
85222-48130	116185+116178
85242-02040	116513
8524-20F010	116513
85242-0R010	116513
SU001A1312	116137+116112
SU001A2556	116137+116112

VAUXHALL	
1272006	116514
1272339	119512
6272279	119328
6272288	119507
13289892	119281
13289893	119281
13295280	119281
13348835	119281
13348837	119281
13348852	119281

VOLKSWAGEN	
1H0998003	119729
1J0998002A	119319
1J0998003	119251
1J1955426A	119319
1J2955425B	119325
1J2955426B	119325
1J2955426B	119326
1K0955429B	119305
1K0998002A	119355
1K2998002	119355
1K8955425B	119305
1K8955426B	119305
1K9955427	119504
1Q195542503C	119305
1Q1955425A	119305
1Q195542603C	119305
1Q1955426A	119305
1Q1998002	119305
1S1955425	119260
1S1955426	119260
1S1998002	119260
1S6955427	119516
1T0955427B	119518
1T1998002	119298
1Z5955425	119502
2E1955421A	119407
2E1955421B	119407
2E1998002	119407
2K1955425	119355
2K1955425C	119298
2K1955426	119355
2K1955426C	119298
3AB998002	119273
3B0998002A	119321
3B2955425E	119326
3B2998002A	119326
3C1955425B	119261
3C1955425B	119305
3C1955425D	119305
3C1955426B	119261
3C1955426B	119305
3C1955426B	119261
3C1955426D	119305
3C1998002	119261
3C1998002	119305
3C8955425B	119296
3C8955425B	119305
3C8955426B	119305
3C9955425	119515
5C1955425	119258
5C7955425A	119261
5C7955425A	119261
5C7955426A	119261
5G1998002A	119272
5J7955425	119504
5K1945426	119305
5K1955425	119305
5K1955426	119305
5K6955427A	119514
5K6955427A	119516
5K79455426	119261
5K7955425	119261
5K7998002	119261
5M0955427A	119518
5N1955425	119296
5N1955426	119296
5N1998002	119296
6Q1955425C	119301
6Q1955426A	119301
6Q1998002	119319
6Q2998002A	119325
6Q6955425A	119504
6R1955425A	119260
6R1955426A	119260
6R1998002	119260
7E0955425	119502
7E0955425A	119503
7E1 998 002	119340

VOLKSWAGEN (...)	
7H5955425	119360
7H6955425	119361
7L0955425L	119381
7L0998002	119381
7L5955425A	119381
7L6955425A	119381
7L6955425B	119381
7M3955425B	119319
7M3955426A	119383
7M3955426B	119383
7M3998002A	119383
7N1955425	119441
7N1955426	119441
7P0955425B	119381
7P0955425B	119381
7P0955425C	119381

VOLVO	
30649727	119507
30655210	119356
30655215	119359
30655217	119356
30655226	119359
30663894	119513
30699635	119390
31250286	119414
31250288	119418
31253012	119414
31276070	119418
31276071	119418
31283773	119356
31283774	119359
31333413	119356
31333414	119359

Easily **detect wiper defects**

*Erkennen **Sie fehlerhafte Wischer auf einen Blick***

- **Visual control** of the wiping quality
- ***Kontrolle** der Wischqualität*

Streaks
Schlieren

Unwiped zones
Nicht gewischte Bereiche

Fogging
Beschlagen

Judder and noise
Ruckeln

- **Diagnose blade** and wiper arm
- ***Diagnose** an Wischerblatt und -arm*

Cracked blade
Poröses Wischgummi

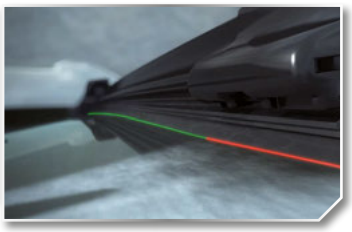

Bent blade
Verbogenes Wischgummi

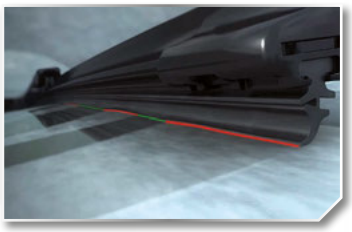

Torn blade
Abgerissenes Wischgummi

Play between wiper and wiper arm
Spiel zwischen Blatt und Wischarm

- **Assess the level of wear** of your wiper blades at a glance
- ***So sehen Sie den Verschleis** Ihres Wischblatts auf einen Blick*

- SWF recommends to change **wiper blades once a year**
- *SWF empfiehlt die Wischer einmal **im Jahr zu wechseln***

Product numbers codification in numerical order

Aufbau der Referenznummern, numerische Reihenfolge

Refills / *Wischgummis*

115 xxx ▸ Refills
Wischgummis

Standard range / *Standard Sortiment*

132 xxx ▸ Das Original Trucks
116 xxx ▸ Das Original program

Flat blade range / *Flachwischer-Sortiment*

133 xxx ▸ VisioFlex® Trucks Flat Blade to upgrade
Flachwischer Umrüstung
119 xxx ▸ VisioFlex® Flatblade Original Equipment
Flachwischer Erstausrüstung

Adaptor kits / *Adapter-Sätze*

581 xxx

Das ◆ Original Trucks

Range and Technology / *Sortiment und Technologie*

- **19 wiper blade references** consisting of 16 single blade references, and 3 Kit references.
- Coverage rate of **98% of the European car park** (BUS, L.C.V., Truck).
- **100% metal structure** providing robustness, combined with a long lasting rubber.

- ***19 Art. Nr. SWF NKW Wischer,*** *davon 16 Art. Nr in Einzelverpackung und 3 Art. Nr. im Satz.*
- *Abdeckung von **98% des europäischen Fuhrparks** (LKW, Bus, Transporter).*
- ***100% Metallstruktur** in Verbindung mit qualitativ hochwertigen Verbindungsgelenken ermöglichen eine besonders lange Lebensdauer.*

Range and Benefits / *Sortiment und Vorteile*

- **N°1 O.E.M.** supplier in Europe.
- **German production:** all fast movers made in Germany, Bietigheim plant.
- SWF Das Original Trucks range **respects 100% O.E. specifications,** inclusive of spray bars and adaptors.
- **Single x1 offer** means less space and less value for product stock.
- Rubber blades ensure an **efficient and long-lasting wipe** whatever the weather conditions.
- Original adaptors for **easy and fast fitting.**

- ***Nr. 1 O.E.** Lieferant in Europa.*
- ***Deutsche Produktion:** alle Fastmover Made in Germany, Bietigheim.*
- *SWF Das Original Truck **entspricht 100% O.E. Spezifikationen** (Waschdüsen, Adapter).*
- *Effizientere Lagerhaltung durch **Einzelverpackungen.***
- *Das Wischgummi sorgt für optimales, effizientes und lang **anhaltendes Wischergebnis** bei jedem Wetter.*
- *Die Original Adapter ermöglichen **eine einfache und schnelle Montage.***

VisioFlex® Trucks

Your choice for excellence

Innovation: the complete Flat Blade range for trucks!

Innovation: *das komplette Flachwischersortiment für LKWs.*

Range / *Sortiment*

- **11 single blade references** dedicated to truck applications using 9x4 mm and 12x4 mm hook arms.
- Including **3 references** equipped with washer ramp to match with O.E. features.
- **81% of European trucks** park covered* - Top 30 European trucks!
- **Easy and fast fitting** on most popular trucks on the market.

- ***11 Art- Nr. in Einzelverpackung*** speziell entwickelt für LKWs mit 9x4mm und 12x4mm Hakenanschlüssen.
- ***3 Flachwischer*** *sind mit Waschdüsen (nach O.E. Spezifikationen) ausgestattet.*
- *Abdeckung von* ***81% der europäischen LKWs*** *- die Top 30 LKW in Europa!*
- ***Einfache und schnelle Montage*** *auf den Top LKWs.*

Here a few of the main applications covered / *Einige Hauptanwendungen:*

- *DAF CF65, CF75, CF85, F65, F75, F85, LF55, XF95, XF105*
- *Renault Trucks Kerax, Mascott, Master Midlum, Premium*
- *Scania G, P, R, T*
- *Mercedes-Benz Actros, Actros MP2/MP3, Atego, Axor*
- *Volvo Trucks FE, FL, FH, FM*

TecDoc CERTIFIED DATA SUPPLIER

SWF	x1 / x2	mm/''			Main applications/ *Hauptanwendungen*
133550	X1	550 / 22'	9 x 4 mm		DAF XF105/XF95
133600	X1	600 / 24'	9 x 4 mm		DAF CF,F 45-97, F45-98, F45-99
133601	X1	600 / 24'	9 x 4 mm	washer ramp *Waschdüse*	DAF LF, IVECO Daily, RENAULT Midlum, Mascott, Master
133650	X1	650 / 26'	9 x 4 mm		MERCEDES-BENZ Atego
133651	X1	650 / 26'	9 x 4 mm	washer ramp *Waschdüse*	RENAULT TRUCKS Kerax, Premium, VOLVO FE
133700	X1	700 / 28'	9 x 4 mm		MERCEDES-BENZ Actros
133602	X1	600 / 24'	12 x 4 mm		MAN F2000, M2000M (Cabine F)
133652	X1	650 / 26'	12 x 4 mm		VOLVO FH/FM, IVECO Eurocargo, Stralis Ph1 + Ph2, MB SK/MK
133653	X1	650 / 26'	12 x 4 mm		MAN TGA, TGS/TGX, TGL/TGM
133702	X1	700 / 28'	12 x 4 mm		RENAULT TRUCKS Magnum
133703	X1	700 / 28'	12 x 4 mm	washer ramp *Waschdüse*	Scania P/G/R/T, Scania 4

* Truck/LCV parc, countries considered: Germany, France, Italy, Spain, UK, Poland, Turkey, Benelux

* *LKW/Transporter in: Deutschland, Frankreich, Italien, Spanien, UK, Polen, Türkei, Benelux*

SWF, your established premium brand for trucks

SWF, Ihre Premium-Marke für Nutzfahrzeuge

RECOGNIZED LEADERSHIP ON THE MARKET

Confirmation of O.E. certification: SWF is the leader in OEM on main manufacturers as MAN, DAF, Volvo, Mercedes-Benz, Scania, Renault Trucks, Iveco.

ANERKANNT ALS MARKTFÜHRERT

Bestätigt durch OE Zertifizierungen: SWF ist O.E. Marktführer bei bedeutenden LKW Herstellern wie MAN, Mercedes-Benz, DAF, Volvo, Scania, Renault und Iveco.

N°1 O.E.M. SUPPLIER IN EUROPE
NR. 1 O.E. LIEFERANT IN EUROPA

THE GERMAN WIPER SPECIALIST
DER DEUTSCHE WISCHERSPEZIALIST

ALL TECHNOLOGIES AVAILABLE
ALLE TECHNOLOGIEN VERFÜGBAR

PREMIUM QUALITY OFFER

All main fast movers are produced in Germany. SWF, home and origin in Bietingheim, respects 100% O.E. specifications in terms of spray bars and adaptors

PREMIUM KOMPLETTSORTIMENT

Die Fastmover-Wischer werden im SWF Stammwerk in Bietigheim, Deutschland, produziert und alle Wischer entsprechen 100% O.E. Spezifikationen (Waschdüsen, Adapter).

LEADING THE INNOVATION

Full offer for trucks vehicles: conventional blades, Flat Blade upgrade and wiper motors.
SWF, your established premium brand with a fully comprehensive wiping range for trucks.

INNOVATIONSFÜHRER

Das Komplettangebot für Nutzfahrzeuge: Bügelwischer, Flachwischer, Wischermotor
SWF, Ihre Premium-Marke bietet Ihnen ein Komplettangebot rundum das Wischsystem von Nutzfahrzeugen.

SWF		x1 x2	mm/ inches			For/Pour Main applications Principaux véhicules	
SWF - Das Original Trucks							
132000	115757	x1	1000 / 40	22 25 27		BERKHOF IRISBUS JONCKHEERE MAN	**Axial** **Evadys** **Iliade** (01/97>) **Deauville** **Lion's Star** (2004>)
132001	115757	x1	1000 / 40	16x6	**C1**	IRISBUS JONCKHEERE MAN MERCEDES-BENZ	**Cityclass** (1995>) **Mistral** **Lion's Star** (1992>2004) **Cito** (1997>) **Travego** (01/97>)
132400	115704	x1	400 / 16	9x3 7,1x2,5 8x2 / 8x3	**T2** (189336) H (192390) R (191088)	FORD MERCEDES-BENZ OPEL TOYOTA VOLKSWAGEN	**Transit Connect, Tourneo Connect** (04/04>) **Vito** (09/95>08/03) **Combo** (10/01>) **Hi-Ace II & III** (08/85>10/95) **Transporter T4** (09/90>12/03)
132451	115705	x1	450 / 18	9x3	**T2** (189336)	IRISBUS IVECO NISSAN VW	**Renault - Agora** **79.12 Turbo Zeta** (01/90>) **Cabstar** (01/84>2007) **Transporter** (05/79>08/90)
132502		x1	500 / 20	9x3/9x4 13,6 / 16,2 16,2	U (180808) N6* (581155) N9* (581155)	DAF FIAT MAN MERCEDES-BENZ	**F 55** (01/93>2001) **Ducato** (05/81>04/94) **Cla** (2012>) **Unimog (U5000)** **Zetros (1833A/2733A)**
132551	115709	x1	550 / 22	9x4 16,2	**T16** (580805) N3* (581156)	DAF FORD PEUGEOT VW	**F 95** (06/91>02/97) **XF 510 (Euro 6)** (10/12>) **Tourneo/Transit Connect** (01/03>03/04) **Partner 1/ -Origin** (06/96>) **Transporter** (09/90>12/03)
132560	115709	x1	560 / 22	12x4	**T7** (580804)	DAF PEGASO	**F 95** (04/87>05/91) **1226-2331** (09/88>) **3080-3189 Troner** (09/87>)
132601		x2	600 / 24 600 / 24	9x4 9x4	**M10** **M10**	DAF IVECO RENAULT TRUCKS VOLVO	**LF45, LF55** (04/01>) **Daily City** (06/99>) **Midlum** (03/00>) **Mascott, Master New** (06/99>) **FL** (12/06>)
132602		x2	600 / 24 600 / 24	9x4 9x4	**M10** **M10**	DAF IVECO RENAULT TRUCKS VOLVO	**LF45, LF55** (04/01>) **Daily City** (06/99>) **Midlum** (03/00>) **Mascott, Master New** (06/99>) **FL** (12/06>)
132603	115710	x1	600 / 24	12x4 9x4 16,2 9x3	**T7** (580804) T8 (580803) N4* (581157) N8* (581157) N13* 581157	DAF MERCEDES-BENZ NISSAN RENAULT TRUCKS VW	**CF65, CF75, CF85** (03/98>) **Unimog (U20)** **Atleon** (2000>) **G (Maxter, Manager)** (01/93>) **Transporter T5** (11/03>)
132651		x2	650 / 26 650 / 26	9x4 9x4	**M10** **M10**	RENAULT TRUCKS VOLVO	**Kerax** (01/06>) **Premium** (01/06>) **FE** (12/06>)
132652	115753	x1	650 / 26	12x4 9x4 9x4 16,2	**T7** (580804) T8 (580803) T11 N4* (581157)	IVECO	**Astra HD9** (2012>) **Euro EuroCargo (R1)** (01/92>12/07) **Euro EuroCargo** (01/08>) **Trakker Hi-Land** (01/13>) **Stralis Hi-Way/Hi-Road** (10/12>)
132653 NEW		x2	650 / 26 650 / 26	14X4	T14	RENAULT TRUCKS (R.V.I.)	**Gamme C** (06/13>) **Gamme K** (06/13>) **Gamme T** (06/13>) **Gamme T High Sleeper** (10/13>)

7

*581155 = Kit 1 - *581156 = Kit 2 - *581157 = Kit 3
(Sold separately - Vendu séparément)

SWF		x1 x2	mm/ inches			For/Pour Main applications Principaux véhicules	
▶ SWF - Das Original Trucks (...)							
132702	115755	x1	700 / 28	9x4	**T8** (580803)	FORD MERCEDES-BENZ	**Transit** (03/00>) **Actros** (01/97>09/02) **Actros MP2 / MP3** (10/02>2013)
132703	115755	x1	700 / 28 Clips	12x4	**T7** (580804) 2 Clips for ramp	MERCEDES-BENZ VOLVO	**Actros MP4 (Euro 5 / 6)** (10/11>) **Antos** (09/12>) **FH / FH 16 (Euro 6)** (03/13>)
132704	115755	x1	700 / 28	12x4 16,2	**T7** (580804) N4* (581157)	MERCEDES-BENZ RENAULT TRUCKS SCANIA VAN HOLL VOLVO	**Unimog (U400 / U500)** **Magnum / AE** (10/90>) **P, R, T** (2004>) **TX 21 / TDX 21 Altano** **FL 7, FL 12** (10/95>1998)
132705	115755	x1	700 / 28	12x4	**T7** (580804)	MERCEDES-BENZ SCANIA VOLVO	**Actros MP4 (Euro 5 / 6)** (10/11>) **Antos** (09/12>) **P, R, T** (2004>) **FH / FH 16 (Euro 6)** (03/13>)
132801	115756	x1	800 / 32	25,2 25,2 16	**N12** N14 N11	CAETANO KÄSSBOHRER-SETRA MAN SCANIA VAN HOOL	**Optimo IV** (1996>) **U 80** (1980>) **NM 152** (1989>1997) **110 (Omnicity, Ominilink)** **T900**
132900		x1	900 / 36	25,2	**N15** (191292)	BERKHOF KÄSSBOHRER-SETRA MERCEDES-BENZ NEOPLAN VAN HOOL	**2000 NL** **S 328 DT** (07/91>) ▼ **Tourino** (2004>) **Centroliner** ◫ **EOS 80, -90**
132901		x1	900 / 36	16x6	**C1**	MAN MERCEDES-BENZ NEOPLAN SCANIA	**NG, NL, NU** **SU** **Citaro** (1998>) **Centroliner** **110 Omniline** (11/00>)
▶ SWF - VisioFlex® Trucks Flat Blade to upgrade / Flachwicher Umrüstungs							
133550		x1	550 / 22	9x4	**U** (180808)	DAF	**XF95** (03/97>) **XF105** (03/06>)
133600		x1	600 / 24	9x4	**U** (180808)	DAF	**CF65, CF75, CF85** (03/98>) **F65, F75, F85** (01/92>1998)
133601		x1	600 / 24	9x4	**U** (180808)	DAF OPEL RENAULT TRUCKS VOLVO	**LF55** (04/01>) **Movano** (02/02>) **Midlum** (01/01>) **Mascott, Master New** (11/99>) **FL** (12/06>)
133602		x1	600 / 24	12x4	**U** (180808)	MAN	**M 2000** (04/96>10/05) **F 2000** (10/94>) **F 90** (01/86>09/94) **M** (01/86>12/96)
133650		x1	650 / 26	9x4	**U** (180808)	MERCEDES-BENZ	**Atego** (04/98>10/04) **Atego 2** (10/04>) **Axor** (09/01>10/04) **Axor 2** (10/04>)
133651		x1	650 / 26	9x4	**U** (180808)	RENAULT TRUCKS VOLVO	**Kerax** (01/06>) **Premium** (01/06>) **FE** (12/06>)
133652		x1	650 / 26	12x4	**U** (180808)	IVECO VOLVO FM	**EuroCargo** (01/92>12/07) **Stralis** (2002>01/08) **Trakker** (2002>01/08) **FH / FH16** (02/06>2012) **(02/06$)**

7

*581155 = Kit 1 - *581156 = Kit 2 - *581157 = Kit 3
(Sold separately - Vendu séparément)

*581155 = Kit 1 - *581156 = Kit 2 - *581157 = Kit 3
(Sold separately - Vendu séparément)

SWF		x1 x2	mm/ inches			For/Pour Main applications Principaux véhicules	
SWF - VisioFlex® Trucks Flat Blade to upgrade / Flachwicher Umrüstungs (...)							
133653		x1	650 / 26	12x4	**U** (180808)	MAN TG	**TG** (09/00>) **TGA** (09/04>) **TGL** (05/05>) **TGM** (11/05>) **TGS / TGX** 2008>
133700		x1	700 / 28	9x4	**U** (180808)	MERCEDES-BENZ	**Actros** (01/97>09/02) **Actros MP2/MP3** (04/03>2013)
133702		x1	700 / 28	12x4	**U** (180808)	RENAULT TRUCKS (R.V.I.)	**Magnum AE 380 … 520** (03/97>2013)
133703		x1	700 / 28	12x4	**U** (180808)	SCANIA	**G** (08>) **P** (09/05>) **R** (09/05>) **T** (09/05>)
SWF - Das Original Program							
116137	115753	x1	650 / 26	9X4 9x4	**A** (193588) **U** (180808)	FORD	**Transit 2000** (11/00>)
116153		x1	650 / 26	9x4	**M10**	MERCEDES	**Vito** (12/98>08/03)
116154		x1	550 / 22	9x4	**M10**	MERCEDES	**Vito** (12/98>08/03) **V-Class** (09/96>08/03)
116166	115709	x1	550 / 22	9x3/9x4	**U** (180808)	FIAT FORD PEUGEOT	**Ducato** (05/94>06/06) **Transit** (01/86>02/00) **Transit Connect** (04/04>) **Tourneo Connect** (04/04>) **Boxer** (02/94>06/06)
116340		x2	600 / 24 Spoiler 525 / 21	9x4 9x4	**M10** **M10**	NISSAN OPEL RENAULT	**Primastar** (03/02>) **Vivaro** (06/01>) **Trafic** (03/01>)
SWF - VisioFlex® Flatblade Original Equipment / Flachwischer Erstausrüstung							
119305		x2	600 / 24 475 / 19			VW	**Caddy 3** (03/07>)
119355		x2	600 / 24 475 / 19			VW	**Caddy 3** (02/04>02/07)
119392		x2	580 / 23 530 / 21			RENAULT	**Kangoo 2** (01/08>12/08)
119398		x2	700 / 28 650 / 26			MERCEDES-BENZ	**Viano (NCV2)** (03/05>) **Vito (NCV2)** (11/04>)
119407		x2	650 / 26 600 / 24			MERCEDES-BENZ VW	**Sprinter** (06/06>) **Crafter** (06/06>)
119409		x2	650 / 26 600 / 24			MERCEDES-BENZ VW	**Sprinter** (06/06>) **Crafter** (06/06>)
119416		x2	650 / 26 550 / 22			CITROËN FIAT PEUGEOT	**Jumper** (07/06>) **Ducato** (07/06>) **Boxer** (07/06>)
119429		x2	650 / 26 400 / 16			CITROËN PEUGEOT	**Berlingo 2** (05/08>) **Partner 2** (06/08>)
119502		x1	405 / 16			VW	**Caddy 3** (02/04>) **Transporter T5** (11/03>)
119503		x1	455 / 18			VW	**Transporter T5** (11/03>)
119504		x1	335 / 13			SKODA	**Praktik** (03/06>)
119508		x1	425 / 17			MERCEDES-BENZ VW	**Sprinter** (06/06>) **Crafter** (06/06>)
SWF Wiper blade rubber / wischgummi							
115704		x2	400 / 16				**132400**
115705		x2	450 / 18				**132451**
115706		x2	500 / 20				**132502**
115709		x2	550 / 22				**132551, 132560**

*581155 = Kit 1 - *581156 = Kit 2 - *581157 = Kit 3
(Sold separately - Vendu séparément)

SWF		x1 x2	mm/ inches			For/Pour Main applications Principaux véhicules
▶ SWF Wiper blade rubber / wischgummi (...)						
115710		x2	600 / 24			**132600**
115753		x20	650 / 26			**132651**
115755		x20	700 / 28			**132702, 132704**
115756		x20	800 / 32			**132801**
115757		x20	1000 / 40			**132000, 132001**

SWF Adaptor kits / Kit adaptateurs (Sold separately - Vendu séparément)

581155	**Kit 1**	1 x (**N6** + **N9** + Screw / Washer / Nut - Vis / Rondelle / Ecrou)
581156	**Kit 2**	1 x (**N3** + Screw / Washer / Nut - Vis / Rondelle / Ecrou)
581157	**Kit 3**	1 x (**N4** + **N8** + **N13** + Screw / Washer / Nut - Vis / Rondelle / Ecrou)

7

*581155 = Kit 1 - *581156 = Kit 2 - *581157 = Kit 3
(Sold separately - Vendu séparément)

D	Heckwischblatt
GB	Rear Windscreen
F	Balai arrière
NL	Achterruit
E	Luneta posterior
P	Vidro posterior
I	Lunotto
PL	Szyba tylna
RU	Заднее стекло
TU	Arka cam
GR	Οπίσθιο τζάμι

D	Kurzes Fahrerhaus
GB	Cab over Engine
F	Modèle à cabine avancée
NL	Frontgestuurde cabine
E	Modelo de cabina avanzada
P	Modelo de cabina avançada
I	Modello a cabina avanzata
PL	Model z kabiną nad silnikiem
RU	Моторный отсек под кабиной
TU	Burunsuz kasa (Kabin motor üzerinde)
GR	οντέλο με καμπίνα πίσω από τον κινητήρα

D	Haubenfahrzeug
GB	Cab behind Engine
F	Modèle à moteur avancé
NL	Torpedo cabine
E	Modelo de cabina con motor avanzado
P	Modelo de cabina com motor avançado
I	Modello a motore avanzato
PL	Model z kabiną za silnikiem
RU	Моторный отсек перед кабиной
TU	Burunlu kasa (Kabin motor arkasında)
GR	Μοντέλο με καμπίνα επάνω στον κινητήρα

D	Untere Scheibe
GB	Lower Windscreen
F	Vitre basse, Pare-Brise inférieur
NL	Onderste voorruit
E	Parabrisas inferior
P	Pára - brisas inferior
I	Parabrezza inferiore
PL	Szyba przednia dolna
RU	нижняя зона ветрового стекла
TU	Alt ön cam
GR	Κάτω παρμπρίζ

D	Obere Scheibe
GB	Upper Windscreen
F	Vitre haute, Pare-Brise superieur
NL	Bovenste voorruit
E	Parabrisas superior
P	Pára - brisas superior
I	Parabrezza superiore
PL	Szyba przednia górna
RU	верхняя зона ветрового стекла
TU	Üst ön cam
GR	Άνω παρμπρίζ

D	Bitte den Originaladapter wiederverwenden
GB	Re-use vehicle's existing adaptor
F	Réutiliser la pièce d'adaptation montée d'origine
NL	De adaptor hergebruiken
E	Reutilizar el adaptador de origen
P	Reutilizar o adaptador original
I	Riutilizzare l'attacco montato in origine
PL	Użyj oryginalnego łącznika
RU	повторно используйте штатный адаптер
TU	Aracınızın üzerinde bulunan orijinal adaptörü kullanın
GR	Χρησιμοποιήστε το γνήσιο αντάπτορα

D	Hinweis zu den Waschdüsen
GB	Instruction note for the washer ramp
F	Note d'instruction pour la rampe de lavage
NL	Montage-instructie voor de sproei galerij
E	Instrucciones para la rampa surtidora incorporada
P	Instruções para a rampa de lavagem incorporada
I	Istruzioni di montaggio per il lavavetro
PL	Instrukcja montażu dyszy spryskiwacza
RU	Инструкция для омывателя ветрового стекла
TU	Yıkama rampası için kullanım notları
GR	Οδηγίες για τη ράμπα πλύσης

D	Für Fahrzeuge mit aufklappbarer Heckscheibe
GB	For vehicle with opening rear window
F	Pour véhicule avec lunette arrière ouvrante
NL	Voor voertuigen met te openen achterruit
E	Para vehículos con luneta trasera practicable
P	Para veículo com janela traseira com abertura
I	Per veicoli con lunotto posteriore apribile
PL	Do samochodów z otwieraną tylną szybą
RU	Для автомобилей с открывающимся задним стеклом
TU	Arka camı açılan araçlar için
GR	ξεχωριστά το τζάμι της πίσω πόρτας
S	För fordon med öppnigsbar bakruta
FIN	For køretøjer med oplukkelig bagrude
DK	Avattava takalasi

D	Für Fahrzeuge mit fester Heckscheibe
GB	For vehicle with fixed rear window
F	Pour véhciule avec lunette arrière fixe
NL	Voor voertuigen met vaste achterruit
E	Para vehículos con luneta trasera fija
P	Para veículo com janela traseira fixa
I	Per veicoli con lunotto posteriore fisso
PL	Do pojazdów z nieotwieraną tylną szybą
RU	Для автомобилей с фиксированным задним стеклом
TU	Arka camı sabit araçlar için
GR	Για όχημα με σταθερό τζάμι στην πίσω πόρτα
S	För fordon med fast bakruta
FIN	Kiinteä takalasi
DK	For køretøjer med fast bagrude

D	Zweiteilige Scheibe
GB	Split screen
F	Pare-Brise divisé
NL	Gedeelde voorruit
E	Parabrisas dividido
P	Pára-brisas dividido
I	Parabrezza diviso
PL	Szyba przednia podzielona
RU	разделённое ветровое стекло
TU	Bolünmüş ön cam
GR	Διαιρεμένο Παρμπρίζ

D	Einteilige Scheibe
GB	Single screen
F	Pare-brise non divisé
NL	Voorruit uit een stuk
E	Parabrisas no dividido
P	Pára-brisas no dividido
I	Parabrezza non diviso
PL	Szyba przednia niepodzielona
RU	Нераздевенное ветровое стекло
TU	Bolünmemiş ön cam
GR	Ενιαίο παρμπρίζ

D	Baujahr
GB	Dates
F	Date
NL	Data
E	Fecha
P	Data
I	Data
PL	Data
RU	Даты
TU	Uygulama tarihi
GR	Ημερομηνία διάθεσης
S	Årsmodell
DK	Årgang
FIN	Päivämäärä

D	Fahrerseite
GB	Driver Side
F	Côté ponducteur
NL	Bestuurder
E	Lado conductor
P	Lado condutor
I	Lato guida
PL	Strona kierowcy
RU	Сторона водителя
TU	Sürücü tarafı
GR	Κάθισμα οδηγού
S	Förarsida
DK	Førerside
FIN	Kuskin puoli

D	Beifahrerseite
GB	Passenger Side
F	Côté passager
NL	Passagier
E	Lado pasajero
P	Lado passageiro
I	Lato passeggero
PL	Strona pasażera
RU	Сторона пассажира
TU	Yolcu tarafı
GR	Κάθισμα συνοδηγού
S	Passagerarsida
DK	Passagerside
FIN	Matkustajan puoli

D	Nur für Rechtslenker
GB	For Right Hand Drive only
F	Conduite à droite uniquement
NL	Rechtsgestuurd voertuig
E	Únicamente para conducción a derechas
P	Para conduzir a direita unicamente
I	Guida a destra
PL	Tylko ruch lewostronny
RU	Только для авто с правым расположением руля
TU	Yalnızca sagdan direksiyonlu araçlar için
GR	Τιμόνι στη δεξιά μεριά
S	Endast för högerstyrd
DK	Kun Højrestyrede
FIN	Vain oikean puoleiselle liikenteelle

D	Adapter
GB	Adaptor
F	Adaptateur
NL	Adapter
E	Adaptador
P	Adaptador
I	Adattatore
PL	Adaptor
RU	Адаптер
TU	Adaptör
GR	Αντάπτορες
S	Adapter
DK	Adaptor
FIN	Adapteri

D	Mit 2 Hecktüren
GB	2 rear doors
F	2 portes arrière
NL	2 deuren achter
E	2 puertas traseras
P	2 portas atrás
I	2 porte posteriori
PL	Dwoje tylnych drzwi
RU	Две задние двери
TU	Çift bagaj kapısı
GR	2 πίσω πόρτες
S	Med dubbla bakdörrar
DK	2 bagdøre
FIN	2 takaovea

D	Heckklappe
GB	Tailgate
F	Hayon arrière
NL	Achter klep
E	Porton trasero
P	Portas detrás
I	Sportello
PL	Tylna klapa
RU	задняя дверь
TU	Tek bagaj kapısı
GR	Πίσω πόρτα
S	Bakdörr
DK	Bagklap
FIN	Takaovi

D	Standardwischer
GB	Conventional Wiper Blade
F	Essuie-Glace conventionnel
NL	Conventioneel ruitenwisserblad
E	Escobilla limpiaparabrisas convencional
P	Escova Limpa-vidros Convencional
I	Spazzola standard
PL	Wycieraczka standardowa
RU	Каркасная щетка
TU	Klasik silecek
GR	Συμβατικός υαλοκαθαριστήρας
S	Standardblad
DK	Standardblad
FIN	Tavallinen pyyhkijän sulka

D	Flachwischer
GB	Flat Blade
F	Essuie-Glace plat
NL	Flat Blade
E	Escobilla limpiaparabrisas plana
P	Escova Plana
I	Flatblade
PL	Wycieraczka płaska
RU	Бескаркасная щетка
TU	Flatblade
GR	Υαλοκαθαριστήρας Επίπεδης λεπίδας
S	Flatblade
DK	Flatblade
FIN	Rungoton pyyhkijän sulka

D	Aufgesetzte Waschdüsen
GB	Washer ramp mounted on blade
F	Rampe d'arrosage montée
NL	Sproeigalerij gemonteerd op wisserblad
E	Rampa surtidora incorporada
P	Sistema de rega montado
I	Distributore per lavavetro incorporato
PL	Z zamontowanym spryskiwaczem
RU	щётка с форсункой омывателя
TU	Su püskürtücüleri kol üzerinde
GR	Σύστημα πλύσης ενσωματωμένο στον υαλοκαθαριστήρα
S	Spolarmunsticke
DK	Tuulilasin pesuneste
FIN	Sprinklerdyse, -bro monteret

D	Mit Verbindungsschlauch
GB	With connection
F	Avec Raccord
NL	Met verbinding
E	Con racor
P	Com conexao
I	Con raccordo
PL	z łącznikiem
RU	С соединителем
TU	Bağlantılı
GR	με σύνδεση

8

For/Pour								
E. AUWÄRTER								
B 13/42/1					N12/N11/N14	132 **801**	132 **801**	
CLUBSTAR			03 →		16X6m	132 **001**	132 **001**	
					22/25/27	132 **000**	132 **000**	
	813/42-1, 913/48				N12/N11/N14	132 **801**	132 **801**	
	MB1223				16X6m	132 **001**	132 **001**	
EUROSTAR	HD/HDS, K 112 T				22/25/27	132 **000**	132 **000**	
	SHD 0 404		96 →		16X6m	132 **001**	132 **001**	
PANORAMA					22/25/27	132 **000**	132 **000**	
	(MB 818)		03 →		16X6m	132 **001**	132 **001**	
SUPER SPRINTER	MB 416 / MB 616		→ 06/06		T8/T16	132 **603**	132 **551**	
TEAMSTAR	613/41, L613 D				N12/N11/N14	132 **801**	132 **801**	
	MB 0815				16X6m	132 **001**	132 **001**	
TEAMSTAR CITY	811D, 814D		87 →		22/25/27	132 **000**	132 **000**	
	MB 818 D Vario		96 →		16X6m	132 **001**	132 **001**	
AMZ								
CS12LF					22/25/27	132 **000**	132 **000**	
AVIA								
1000, 1250, 1601, 1602, 2000					U	132 **502**	132 **502**	
3601, 3602, 5601, 5603					U	132 **502**	132 **502**	
F260, F275					U	132 **502**	132 **502**	
AYATS								
ATLAS		▼	94 →		22/25/27	132 **000**	132 **000**	
BRAVO	I	▼	94 →		22/25/27	132 **000**	132 **000**	
					16X6m	132 **001**	132 **001**	
		▲			22/25/27	132 **000**	132 **000**	
PLATINUM					22/25/27	132 **000**	132 **000**	
BARREIROS DODGE								
C14 / C16			11/79 →		T2	132 **451**	132 **451**	
C3864			02/80 →		T2	132 **451**	132 **451**	
C38T1 / C3464			04/79 →		T2	132 **451**	132 **451**	
BEDFORD								
HA-VAN			06/79 →		T2	132 **400**	132 **400**	
MIDI			07/85 →		T2	132 **451**	132 **451**	
RASCAL			88 →		T2	132 **400**	132 **400**	
TH BLITZ SÉRIE			01/74 →		***Kit 3** (N4)	132 **603**	132 **603**	
TK SERIE			01/78 →		U	132 **502**	132 **502**	
TL SERIE			80 → 92		***Kit 2** T16/(N3)	132 **551**	132 **551**	
TM SERIE			74 →		U	132 **502**	132 **502**	
TX SERIE			80 →		U	132 **502**	132 **502**	
BERKHOF								
2000 NL					N15	132 **900**	132 **900**	
					22/25/27	132 **000**	132 **000**	
AMBASSADOR	Ambassador 120 / 200		00 →		16X6m	132 **001**	132 **001**	
AXIAL	30				22/25/27	132 **000**	132 **000**	
	50		94 →		22/25/27	132 **000**	132 **000**	
	70	▼	94 →		22/25/27	132 **000**	132 **000**	
		▲	94 →		***Kit 3** (N4)	132 **652**	132 **652**	
	100	▼	99 →		22/25/27	132 **000**	132 **000**	
		▲	99 →		***Kit 3** (N4)	132 **652**	132 **652**	
CLUBBUS					16X6m	132 **001**	132 **001**	
EXCELLENCE	500				22/25/27	132 **000**	132 **000**	
	2000 HL	▼			N12/N11/N14	132 **801**	132 **801**	
	3000	▼			22/25/27	132 **000**	132 **000**	
	3000 HLE / HD	▼			N12/N11/N14	132 **801**	132 **801**	
JUNIOR MIDIBUS					N15	132 **900**	132 **900**	
PREMIER			98 →		22/25/27	132 **000**	132 **000**	
RADIAL			98 →		22/25/27	132 **000**	132 **000**	
BEULAS								
AURA					16X6m	132 **001**	132 **001**	
EUROSTAR E		▼			22/25/27	132 **000**	132 **000**	

*Kit 1 = 581155 - *Kit 2 = 581156 - *Kit 3 = 581157
(Sold separately -Vendu séparément)

For/Pour								
BEULAS (...)								
GIANINO					N12/N11/N14	132 **801**	132 **801**	
GLORY		▼			16X6m	132 **001**	132 **001**	
		▲			N12/N11/N14	132 **801**	132 **801**	
MIDI STAR					22/25/27	132 **000**	132 **000**	
STERGO E					22/25/27	132 **000**	132 **000**	
BHARATBENZ								
HDT	HDT 3128 C				***Kit 3** (N4)	132 **652**	132 **652**	
R : 1617 / 1623 / 2523 / 3123 / 3723					***Kit 3** (N4)	132 **652**	132 **652**	
BOVA								
ALLIANCE CITY B90 / 93A					22/25/27	132 **000**	132 **000**	
ALLIANCE ÜBERLAND					22/25/27	132 **000**	132 **000**	
DAB SERVICEBUS					22/25/27	132 **000**	132 **000**	
EL	EL 24-480				N12/N11/N14	132 **801**	132 **801**	
	EL 24-581, EL 26-581				N12/N11/N14	132 **801**	132 **801**	
	EL 24-605, EL 26-605				N12/N11/N14	132 **801**	132 **801**	
FUTURA	FH 10, FH 12, FH 13		85 →		22/25/27	132 **000**	132 **000**	
	FH 14 Magnum, FH 15 Magnum		85 →		22/25/27	132 **000**	132 **000**	
	FHD 10-340XE…15-430XE				22/25/27	132 **000**	132 **000**	
	FHD 14				22/25/27	132 **000**	132 **000**	
	FL 12, FL 15 Magnum		85 →		22/25/27	132 **000**	132 **000**	
	FLD 12, FLD 15				22/25/27	132 **000**	132 **000**	
MAGIQ			02/00 →		22/25/27	132 **000**	132 **000**	
	HD 120 - 340XE / 380XE		04 →		22/25/27	132 **000**	132 **000**	
MB 0614					T8	132 **603**	132 **603**	
METRORIDER	FHM / FHD				22/25/27	132 **000**	132 **000**	
BYD								
eBUS (METROLINE)			? →			132 **900**	132 **900**	
CAETANO								
ALGAVE			01/85 →		22/25/27	132 **000**	132 **000**	
CITY GOLD		◫	96 →		***Kit 3** (N4)	132 **704**	132 **704**	
COBUS	Cobus 2500 EL				16X6m	132 **901**	132 **901**	
DELTA	Delta II		94 →		22/25/27	132 **000**	132 **000**	
OPTIMO	IV		96 →		N12/N11/N14	132 **801**	132 **801**	
CAMO								
JUPITER 4.5			96 →		22/25/27	132 **000**	132 **000**	
CARBUS								
EGA			96 →		22/25/27	132 **000**	132 **000**	
ERGABIA			94 →		22/25/27	132 **000**	132 **000**	
CARRIER								
SCOLER 2			01/00 →		22/25/27	132 **000**	132 **000**	
CARSER								
CARRIER					22/25/27	132 **000**	132 **000**	
CASTROSUA								
CS 40	CS 40 City / Bus urbain		86 →		***Kit 3** (N4)	132 **704**	132 **704**	
CS 41	CS 40 Inter City / Bus urbain		86 →		N12/N11/N14	132 **801**	132 **801**	
MASTER 36			96 →		16X6m	132 **001**	132 **001**	
CITROËN								
BERLINGO	1/ -First		01/97 → 10/02		T2			132 **400**
	2		05/08 →			119 **429**		
C15			10/95 →		T2	132 **451**	132 **451**	
C25			12/81 → 02/94		U	132 **502**	132 **502**	
C32			12/81 → 02/94		U	132 **502**	132 **502**	
C35			11/73 → 12/91		U	132 **502**	132 **502**	
DISPATCH	1		10/95 → 12/06		T11 U	132 **652**	132 **502**	
JUMPER	1		02/94 → 06/06		U	116 **166**	116 **166**	
	2		07/06 →			119 **416**		
JUMPY	1		10/95 → 12/06		T11 U	132 **652**	132 **502**	
RELAY	1		02/94 → 06/06		U	116 **166**	116 **166**	

*Kit 1 = 581155 - *Kit 2 = 581156 - *Kit 3 = 581157
(Sold separately - Vendu séparément)

For/Pour								
DAF								
CF	65 / 75 / 85		03/98 → 05/13		T8	132 **603**	132 **603**	
			03/98 → 05/13		U	133 **600**	133 **600**	
	CF (Euro 6)		06/13 →		U	133 **600**	133 **600**	
F 500-F 3600	500 / 700 / 900 / 1100 / 1300 / 1500		01/75 → 92		***Kit 3** (N4)	132 **603**	132 **603**	
F 500-F 3602	1600 …. 3600		01/73 → 92		U	132 **502**	132 **502**	
F 55-95	55		01/93 → 01		***Kit 1** (N6 / N9)	132 **502**	132 **502**	
	65		01/93 → 98		T8	132 **603**	132 **603**	
			01/93 → 98		U	133 **600**	133 **600**	
	75		01/92 → 98		T8	132 **603**	132 **603**	
			01/92 → 98		U	133 **600**	133 **600**	
	85		01/92 → 98		T8	132 **603**	132 **603**	
			01/92 → 98		U	133 **600**	133 **600**	
	95		04/87 → 05/91		T7	132 **560**	132 **560**	
			06/91 → 02/97		T16	132 **551**	132 **551**	
LF	45		04/01 → 13		M10	132 **601**		
			04/01 → 13		M10	132 **602**		
	55		04/01 → 13		M10	132 **601**		
			04/01 → 13		U	133 **601**	133 **601**	
			04/01 → 13		M10	132 **602**		
	(Euro 6)		13 →		M10	132 **601**		
			13 →		U	133 **601**	133 **601**	
			13 →		M10	132 **602**		
N 2800-N 3300	N 2800 ... N 3300		01/79 → 12/86		***Kit 3** (N4)	132 **603**	132 **603**	
XF	95		03/97 →		T16	132 **551**	132 **551**	
			03/97 →		U	133 **550**	133 **550**	
	105		03/06 →		T16	132 **551**	132 **551**	
			03/06 →		U	133 **550**	133 **550**	
	…. 510 (Euro 6)		03/13 →		T16	132 **551**	132 **551**	
			03/13 →		U	133 **550**	133 **550**	
DAIHATSU								
DELTA CARRY			01/81 →		T2/H/R	132 **400**	132 **400**	
DENNIS								
RS 130/131/133			01/82 →		***Kit 3** (N4)	132 **603**	132 **603**	
DODGE								
100 SERIE			01/79 →		***Kit 3** (N8)	132 **603**	132 **603**	
100S SERIE			01/82 →		***Kit 3** (N4)	132 **603**	132 **603**	
300 SERIE			01/76 →		T2	132 **451**	132 **451**	
SPACE VAN			01/79 →		T2/H/R	132 **400**	132 **400**	
WCAS 541, WCFS 562, WCFS 415			01/71 →		T2/H/R	132 **400**	132 **400**	
DRÖGMÖLLER								
B	B 12.500		01/94 →		22/25/27	132 **000**	132 **000**	
E	E 290, E 300, E 310, E 320, E 330, E 430 Comet				22/25/27	132 **000**	132 **000**	
E 90-E 430	E 420, E 440	▼			N12/N11/N14	132 **801**	132 **801**	
		▲			***Kit 3** (N4)	132 **704**	132 **704**	
	E 430	▼	01/89 →		***Kit 3** (N4)	132 **652**	132 **652**	
		▲	01/89 →		***Kit 3** (N4)	132 **704**	132 **704**	
DUPLE								
320, 340 COACH					22/25/27	132 **000**	132 **000**	
CARIBBEAN			81 →		N12/N11/N14	132 **801**	132 **801**	
LASER			81 →		N12/N11/N14	132 **801**	132 **801**	
EBRO								
65/TD, 100/8D			01/85 →		***Kit 3** (N4)	132 **704**	132 **704**	
E 154-P 197	E 154, F 260, F 275, P 197		01/78 →		T2	132 **451**	132 **451**	
E 35-E 703	E 35, E 60, E 70, E 95, E 110		01/74 → 01/77		T2/H/R	132 **400**	132 **400**	
E 35-E 704	E 150 ... E 703		01/74 → 01/77		T2/H/R	132 **400**	132 **400**	
F	260...350		04/85 →		U	132 **502**	132 **502**	
F 260-F 351	JX		01/86 →		U	132 **502**	132 **502**	
F 260-F 352	L 35, L 60, L 80		01/80 →		U	132 **502**	132 **502**	
F 260-F 353	M 100, M 125		01/80 →		U	132 **502**	132 **502**	
TRADE			01/86 →		U	132 **502**	132 **502**	

*Kit 1 = 581155 - *Kit 2 = 581156 - *Kit 3 = 581157
(Sold separately -Vendu séparément)

For/Pour								
EBRO (...)								
VANETTE			04/85 →		T2	132 **451**	132 **451**	
EICHER								
SCHLEPPER			01/76 →		U	132 **502**	132 **502**	
ERF								
B-CP	B		01/75 →		U	116 **166**	116 **166**	
	C		01/75 →		U	116 **166**	116 **166**	
	CP Turbo				***Kit 1** (N6 / N9)	132 **502**	132 **502**	
ECX	ECX				T8	132 **603**	132 **603**	
E-M	E		01/86 →		U	132 **502**	132 **502**	
	E 10				***Kit 1** (N6 / N9)	132 **502**	132 **502**	
	EC 11, 12, 41				T8	132 **603**	132 **603**	
	M		01/75 →		U	116 **166**	116 **166**	
FAHR								
M	750 / 900 / 922		01/74 →		U	132 **502**	132 **502**	
	1002 / 1102 / 1202		→ 01/76		U	132 **502**	132 **502**	
	1300 / 1302 / 1600		01/72 →		U	132 **502**	132 **502**	
FAUN								
K 17, K 34 NATO			01/75 →		U	132 **502**	132 **502**	
L 70, L 240 (8X8)			01/75 →		U	132 **502**	132 **502**	
FENDT								
F 275 GT			01/76 →		U	132 **502**	132 **502**	
FERQUI								
NARCEA	Narcea 3.3		95 →		22/25/27	132 **000**	132 **000**	
	Narcea 3.5		94 →		22/25/27	132 **000**	132 **000**	
FIAT								
242			01/80 → 01/82		U	132 **502**	132 **502**	
DUCATO			05/81 → 04/94		U	132 **502**	132 **502**	
			05/94 → 06/06		U	116 **166**	116 **166**	
			07/06 →			119 **416**		
SCUDO			10/95 →		T11 U	132 **652**	132 **502**	
TALENTO			01/89 → 94		U	132 **502**	132 **502**	
FODEN								
S 80 SERIE CAB			01/72 →		***Kit 3** (N4)	132 **603**	132 **603**	
FORD								
CARGO			01/75 → 01/85		***Kit 3** (N4)	132 **603**	132 **603**	
			02/85 →		***Kit 3** (N4)	132 **652**	132 **652**	
	(Ford Otosan)		01/96 → 11/06		T7	132 **704**	132 **704**	
			12/06 →		T8	132 **702**	132 **702**	
ECONOVAN			85 → 92		T2/H/R	132 **400**	132 **400**	
RANGER PICK-UP			01/97 →		T2	132 **451**	132 **451**	
SERIE A			01/78 → 01/83		U	132 **502**	132 **502**	
SERIE H			01/75 → 01/80		T2	132 **451**	132 **451**	
TOURNEO			10/94 → 02/00		U	116 **166**	116 **166**	
	Connect		01/03 → 03/04		T16	132 **551**	132 **551**	
			04/04 →		U/ T2	116 **166**	116 **166**	132 **400**
TRANSIT			01/86 → 10/00		U	116 **166**	116 **166**	
	2000		11/00 → 08/09		T5 U	116 **169**	116 **166**	
			11/00 →		T8	132 **702**	132 **603**	
	Connect		01/03 → 03/04		T16	132 **551**	132 **551**	
			04/04 →		U/ T2	116 **166**	116 **166**	132 **400**
FUSO (Mitsubishi)								
CANTER	Canter / E-Canter		12 →		U	132 **502**	132 **502**	
			12 →		U	116 **126**	116 **126**	
TV	TV (Euro 5)				T8	132 **652**	132 **652**	
FOTON								
AUMAN	EST 430		16 →		T11	132 **652**	132 **652**	
GINAF								

*Kit 1 = 581155 - *Kit 2 = 581156 - *Kit 3 = 581157
(Sold separately - Vendu séparément)

For/Pour								
GINAF (...)								
C	C 2120 N, ...		08 →		T7	132 **652**	132 **652**	
M	3132 / 3333 / 4243 / 4443				T8	132 **603**	132 **603**	
X	2221				T8	132 **603**	132 **603**	
	3232 / 3329 / 3331 / 3335				T8	132 **603**	132 **603**	
	4241 / 4243 / 4343 / 4345 / 4446				T8	132 **603**	132 **603**	
	5250 / 5350 / 5450				T8	132 **603**	132 **603**	
GME								
MIDI			07/85 →		T2	132 **451**	132 **451**	
RASCAL					T2	132 **400**	132 **400**	
GOLDEN DRAGON								
EXPLORER			15 →		22/25/27	132 **000**	132 **000**	
PIVOT			15 →		22/25/27	132 **000**	132 **000**	
SPLENDOUR			15 →		22/25/27	132 **000**	132 **000**	
			15 →		T2	132 **451**		
XML 6125 CL / CC					22/25/27	132 **000**	132 **000**	
HESS								
Hess-Bus	Swiss Diesel Plus		2014 →		22/25/27	132 **000**	132 **000**	
HINO								
HE, KB, KL, KR			01/76 →		T2/H/R	132 **400**	132 **400**	
HISPANO								
BUS URBAIN / MIDIBUS			94 →		***Kit 3** (N4)	132 **704**	132 **704**	
CERCANIAS VITA					22/25/27	132 **000**	132 **000**	
CIERZO / GRAND TOURISME			96 →		22/25/27	132 **000**	132 **000**	
HYUNDAI								
H	H 100, 150		09/96 → 07		T2	132 **451**	132 **451**	
IHC								
NUTZFAHRZEUGE			01/81 →		U	132 **502**	132 **502**	
IKARUS								
386-398	386, 396, 412, 415, 435, 61, 417, 417 NF, 315				22/25/27	132 **000**	132 **000**	
	397.07	▼	01/93 →		22/25/27	132 **000**	132 **000**	
		▲	01/93 →		N12/N11/N14	132 **801**	132 **801**	
	398.20		01/94 →		22/25/27	132 **000**	132 **000**	
E	E 13 / E 94 / E 91		01/94 →		22/25/27	132 **000**	132 **000**	
MIDIBUS	405				N12/N11/N14	132 **801**	132 **801**	
MINIBUS	542 / 546		86 →		***Kit 3** (N8)	132 **603**	132 **603**	
SB	3000		89 →		22/25/27	132 **000**	132 **000**	
STADTBUS	480		01/92 →		***Kit 3** (N4)	132 **704**	132 **704**	
INDCAR								
MAGO					N12/N11/N14	132 **801**	132 **801**	
NEXT	L9 (Euro 6)		15 →		22/25/27	132 **000**	132 **000**	
			15 →		22/25/27	132 **000**	132 **000**	
			15 →		22/25/27	132 **000**	132 **000**	
			15 →		22/25/27	132 **000**	132 **000**	
			15 →		22/25/27	132 **000**	132 **000**	
VEHIXEL	CYTIOS 4		14 →		M10	132 **602**		
	MOBI / MOBI Low Entry		14 →		M10	132 **602**		
	WING		14 →		M10	132 **602**		
INTEGRALIA								
IN-Tourism / IN-Urban / IN-VIP / IN-VIP +						119 **407**		
IRISBUS								
EVADYS					22/25/27	132 **000**	132 **000**	
CITELIS					22/25/27	132 **000**	132 **000**	
CROSSWAY	Crossway / Crossway L.E				22/25/27	132 **000**	132 **000**	
[HEULIEZ] GX	27		12/88 →		***Kit 3** (N4)	132 **704**	132 **704**	
	37		12/88 →		***Kit 3** (N4)	132 **704**	132 **704**	
	44		05/90 →		22/25/27	132 **000**	132 **000**	
	77 H Compac' Bus				22/25/27	132 **000**	132 **000**	
	107		05/90 →		22/25/27	132 **000**	132 **000**	

*Kit 1 = 581155 - *Kit 2 = 581156 - *Kit 3 = 581157
(Sold separately -Vendu séparément)

For/Pour

IRISBUS (...)								
[HEULIEZ] GX	113		05/90 →		22/25/27	132 **000**	132 **000**	
	117 Access' Bus				N12/N11/N14	132 **801**	132 **801**	
	217 Access' Bus				N12/N11/N14	132 **801**	132 **801**	
	317 Access' Bus				N12/N11/N14	132 **801**	132 **801**	
	417 Access' Bus				N12/N11/N14	132 **801**	132 **801**	
[IVECO] 310	315.8.17 Turbo				22/25/27	132 **000**	132 **000**	
[IVECO] 370	370		→ 08/82		N12/N11/N14	132 **801**	132 **801**	
	370 Domino		09/82 →		22/25/27	132 **000**	132 **000**	
	370.12.25		79 → 82		N12/N11/N14	132 **801**	132 **801**	
[IVECO] 470	470.67		81 →		N12/N11/N14	132 **801**	132 **801**	
	471		82 →		22/25/27	132 **000**	132 **000**	
[IVECO] 570	570		81 →		N12/N11/N14	132 **801**	132 **801**	
	571		82 →		22/25/27	132 **000**	132 **000**	
[IVECO] 670	670		81 →		N12/N11/N14	132 **801**	132 **801**	
	671		82 →		22/25/27	132 **000**	132 **000**	
[IVECO]	Cityclass		95 →		16X6m	132 **001**	132 **001**	
	EuroClass 380		01/92 →		22/25/27	132 **000**	132 **000**	
	EuroClass HD/ ND/ NT		06/93 →		22/25/27	132 **000**	132 **000**	
	Lorraine GS 240		88 →		22/25/27	132 **000**	132 **000**	
	Lorraine TS 170, 260, 300		09/88 →		22/25/27	132 **000**	132 **000**	
[IVECO] M2000	M 120 R 81 Turbo		81 →		N12/N11/N14	132 **801**	132 **801**	
	M 2000 12M Turbo		81 →		22/25/27	132 **000**	132 **000**	
	M 2000 12M/AL, R 81		11/77 →		N12/N11/N14	132 **801**	132 **801**	
	M 2000 HD		09/82 →		22/25/27	132 **000**	132 **000**	
	My Way		06/98 →		16X6m	132 **001**	132 **001**	
	Orlandi 315S.8.18		01/92 →		N12/N11/N14	132 **801**	132 **801**	
MAGELYS	Magelys / Pro				22/25/27	132 **000**	132 **000**	
MOOVY					22/25/27	132 **000**	132 **000**	
					T2	132 **451**		
[RENAULT]	AGORA				22/25/27	132 **000**	132 **000**	
					T2	132 **451**		
	Agora / Malaga / City Bus				22/25/27	132 **000**	132 **000**	
	ARES		10/98 →		22/25/27	132 **000**	132 **000**	
	AXER				N12/N11/N14	132 **801**	132 **801**	
	ER 100		01/75 →		22/25/27	132 **000**	132 **000**	
	ER 110		01/76 →		22/25/27	132 **000**	132 **000**	
	FR 1		06/83 →		22/25/27	132 **000**	132 **000**	
	ILIADE		01/97 →		22/25/27	132 **000**	132 **000**	
	PR 100, PR 180		08/83 →		***Kit 3** (N4)	132 **704**	132 **704**	
	R 312		08/87 →		22/25/27	132 **000**	132 **000**	
	S 45		06/80 →		***Kit 3** (N4)	132 **603**	132 **603**	
	S 45, S 53, S 105		06/80 →		***Kit 3** (N4)	132 **603**	132 **603**	
	SC 10		02/77 →		***Kit 3** (N4)	132 **704**	132 **704**	
	SG 220		02/77 →		***Kit 3** (N4)	132 **704**	132 **704**	
	TRACER		01/92 → 99		22/25/27	132 **000**	132 **000**	
IRIZAR								
CENTURY			93 →		22/25/27	132 **000**	132 **000**	
			04 →		22/25/27	132 **000**	132 **000**	
			04 →		16X6m	132 **001**	132 **001**	
INTERCENTURY			00 →		22/25/27	132 **000**	132 **000**	
i2 / i2e			15 →		16X6m	132 **001**	132 **001**	
i3					16X6m	132 **001**	132 **001**	
i4					16X6m	132 **001**	132 **001**	
i6		▲			***Kit 1** (N6 / N9)	132 **502**	132 **502**	
		▼			16X6m	132 **001**	132 **001**	
i8	Integral	▲	15 →		16X6m	132 **001**	132 **001**	
PB					22/25/27	132 **000**	132 **000**	
ISUZU								
CITIBUS					22/25/27	132 **000**	132 **000**	
CITIPORT			15 →		22/25/27	132 **000**	132 **000**	
NPR			01/97 →		U	132 **502**	132 **502**	
NOVO	Ultra				N15	132 **900**	132 **900**	

*Kit 1 = 581155 - *Kit 2 = 581156 - *Kit 3 = 581157
(Sold separately - Vendu séparément)

For/Pour								
▶ ISUZU (...)								
TURQUOISE					N12/N11/N14	132 **801**	132 **801**	
VISIGO	VISIGO / VISIGO Interurban		15 →		22/25/27	132 **000**	132 **000**	
▶ IVECO								
50-75	50, 55, 65, 70, 75 C, N, L		08/77 →		T2	132 **451**	132 **451**	
	50.8		01/86 →		T2	132 **451**	132 **451**	
	60.8, 60.10, 65, 65.10, 79.10		01/83 →		T2	132 **451**	132 **451**	
	60.14, 70.14		01/83 →		T2	132 **451**	132 **451**	
	75		01/69 → 01/83		T2	132 **451**	132 **451**	
	75.14, 79, 90.13, 95.14		01/83 →		T2	132 **451**	132 **451**	
79-90	79.12 Turbo Zeta, 79.14 Turbo Zeta		01/90 →		T2	132 **451**	132 **451**	
	79.14, 79.60, 79		01/83 →		T2	132 **451**	132 **451**	
	79.14 M100		01/83 →		***Kit 3** (N4)	132 **603**	132 **603**	
	80, 90		08/77 →		T2	132 **451**	132 **451**	
	80.13		01/83 →		***Kit 3** (N4)	132 **603**	132 **603**	
	80.14 HW, 80.16 HW		01/83 →		T2	132 **451**	132 **451**	
	90 D, 90 M		01/75 → 01/82		T2	132 **451**	132 **451**	
	90 M, 320 M		→ 12/78		U	132 **502**	132 **502**	
	90 M, 90 M6 FK		01/79 →		***Kit 3** (N4)	132 **603**	132 **603**	
100-120	100		08/77 → 85		T2	132 **451**	132 **451**	
	109.14, 109.14.1		01/83 → 92		T2	132 **451**	132 **451**	
	109.14 Zeta		09/88 →		U	132 **502**	132 **502**	
	110.7 Zeta, Turbo Zeta		01/86 → 91		T2	132 **451**	132 **451**	
	110.14		01/83 → 92		T2	132 **451**	132 **451**	
	115.14, 115.14.1, 115.17, 115.17.1		01/83 → 92		T2	132 **451**	132 **451**	
	120 D		01/69 → 12/74		U	132 **502**	132 **502**	
130	130		01/73 → 01/83		T2	132 **451**	132 **451**	
	130 M		→ 12/78		U	132 **502**	132 **502**	
	135 D		01/69 → 12/75		U	132 **502**	132 **502**	
	135.14, 135.14.2		01/83 → 92		T2	132 **451**	132 **451**	
	135.14BOM, 135.17, 135.17.2		01/83 → 92		T2	132 **451**	132 **451**	
	135.17, 136.17		01/83 → 92		T2	132 **451**	132 **451**	
	135.17, 145.17T		09/88 →		***Kit 3** (N4)	132 **603**	132 **603**	
	135.17 IH		09/88 → 92		T2	132 **451**	132 **451**	
	135.17.R.R1, 135.17.R1 RIDEM		01/83 → 92		T2	132 **451**	132 **451**	
145	145.17		01/86 → 91		T2	132 **451**	132 **451**	
160	160		01/73 → 01/83		T2	132 **451**	132 **451**	
	160 D		01/69 → 12/74		U	132 **502**	132 **502**	
	160 M		→ 12/78		U	132 **502**	132 **502**	
	160 M13FS		01/79 →		***Kit 3** (N4)	132 **603**	132 **603**	
	160 R 81 Turbo		01/81 →		22/25/27	132 **000**	132 **000**	
	160 R 81 Turbo (315. 8. 17)				22/25/27	132 **000**	132 **000**	
	165.24, 165.24.R.R1		01/83 →		T2	132 **451**	132 **451**	
170	170 C, N, L		08/77 →		T2	132 **451**	132 **451**	
	170 D		01/69 → 12/74		U	132 **502**	132 **502**	
	170 F		08/77 →		***Kit 3** (N4)	132 **603**	132 **603**	
			01/78 →		***Kit 3** (N4)	132 **603**	132 **603**	
	170 L, R, TL, TR		01/75 → 01/79		***Kit 3** (N4)	132 **704**	132 **704**	
	170 NT, 170 OM35		01/75 → 01/77		T2	132 **451**	132 **451**	
	170 NT		01/77 →		***Kit 3** (N4)	132 **603**	132 **603**	
	170 OM35		01/75 → 01/82		***Kit 3** (N4)	132 **603**	132 **603**	
	170 SH 110		01/73 → 01/78		***Kit 3** (N4)	132 **704**	132 **704**	
	171 M		01/75 → 01/82		***Kit 3** (N4)	132 **704**	132 **704**	
	175.17, 175.04		01/86 →		T2	132 **451**	132 **451**	
	175.17, 175.24 T		09/88 →		***Kit 3** (N4)	132 **603**	132 **603**	
180	180, 2604 A, C, N, L, T		01/77 →		T2	132 **451**	132 **451**	
	180 D, 186 D		10/69 → 12/70		U	132 **502**	132 **502**	
190	190		01/77 →		T2	132 **451**	132 **451**	
	190 F		08/77 →		***Kit 3** (N4)	132 **603**	132 **603**	
			01/78 →		***Kit 3** (N4)	132 **603**	132 **603**	
	190 OM35		01/75 → 01/82		***Kit 3** (N4)	132 **603**	132 **603**	
	190 PAC		01/77 →		***Kit 3** (N4)	132 **603**	132 **603**	
	190.20 N		07/80 → 12/85		***Kit 3** (N8)	132 **603**	132 **603**	

***Kit 1 = 581155 - *Kit 2 = 581156 - *Kit 3 = 581157**
(Sold separately -Vendu séparément)

For/Pour

IVECO (...)

190	190.20 N		07/80 → 12/85		*Kit 3 (N4)	132 **603**	132 **603**	
	190.25 AH		07/83 → 06/86		*Kit 3 (N4)	132 **652**	132 **652**	
	190.25 AN		07/83 → 09/90		*Kit 3 (N4)	132 **603**	132 **603**	
	190.26		01/83 → 01/84		*Kit 3 (N4)	132 **652**	132 **652**	
	190.26 N		01/83 → 06/87		*Kit 3 (N4)	132 **603**	132 **603**	
	190.30 H, P		07/80 →		*Kit 3 (N4)	132 **652**	132 **652**	
	190.30 N		04/87 →		*Kit 3 (N4)	132 **603**	132 **603**	
	190.32 GV, P		07/87 →		*Kit 3 (N4)	132 **652**	132 **652**	
	190.33 P		07/84 → 05/87		*Kit 3 (N4)	132 **652**	132 **652**	
	190.35		01/83 → 01/84		*Kit 3 (N4)	132 **652**	132 **652**	
	190.36 P, T		07/87 →		*Kit 3 (N4)	132 **652**	132 **652**	
	190.38 P		07/80 → 12/87		*Kit 3 (N4)	132 **652**	132 **652**	
	190.38 PT		07/84 →		*Kit 3 (N4)	132 **652**	132 **652**	
	190.42 P		07/84 →		*Kit 3 (N4)	132 **652**	132 **652**	
	190.48 P		07/84 →		*Kit 3 (N4)	132 **652**	132 **652**	
200	200, 230, 260		01/75 → 01/82		*Kit 3 (N4)	132 **704**	132 **704**	
	200 L, R, T		01/75 →		*Kit 3 (N4)	132 **704**	132 **704**	
	200 SH		01/75 → 01/78		*Kit 3 (N4)	132 **704**	132 **704**	
210	210		10/69 → 12/70		U	132 **502**	132 **502**	
220	220 F, 240 F		08/77 →		*Kit 3 (N4)	132 **603**	132 **603**	
	220.30 PT		07/80 → 07/86		*Kit 3 (N4)	132 **652**	132 **652**	
	220.32, P, PT, 220.36, P, PT		→ 07/87		*Kit 3 (N4)	132 **652**	132 **652**	
	220.38 PT		07/80 → 07/86		*Kit 3 (N4)	132 **652**	132 **652**	
230	232.32 AHT		01/83 →		*Kit 3 (N4)	132 **603**	132 **603**	
240	240 F		08/77 →		*Kit 3 (N4)	132 **603**	132 **603**	
	240. 26P > 240.48 P		→ 07/80		*Kit 3 (N4)	132 **652**	132 **652**	
	242		01/80 → 01/82		U	132 **502**	132 **502**	
260	260		01/72 → 01/82		T2	132 **451**	132 **451**	
	260 L		10/77 →		*Kit 3 (N4)	132 **704**	132 **704**	
	260 SH 170 (VÖV)		01/81 →		*Kit 3 (N4)	132 **704**	132 **704**	
	260.25 AN		07/83 → 06/86		*Kit 3 (N4)	132 **603**	132 **603**	
	260.26 H		→ 07/83		*Kit 3 (N4)	132 **652**	132 **652**	
	260.26 NW		01/77 → 01/86		*Kit 3 (N4)	132 **603**	132 **603**	
	260.32		07/90 →		*Kit 3 (N4)	132 **652**	132 **652**	
	260.35 H		01/83 → 12/83		*Kit 3 (N4)	132 **652**	132 **652**	
	260.36		07/88 →		*Kit 3 (N4)	132 **652**	132 **652**	
	260.48		06/89 →		*Kit 3 (N4)	132 **652**	132 **652**	
280	280		01/81 →		U	132 **502**	132 **502**	
300	300 PC, PT		01/77 → 07/88		*Kit 3 (N4)	132 **652**	132 **652**	
	308 L, 315 GT		08/77 →		*Kit 3 (N4)	132 **603**	132 **603**	
	310 D		01/78 →		*Kit 3 (N4)	132 **603**	132 **603**	
	315				U	132 **502**	132 **502**	
320	320 M		→ 12/78		U	132 **502**	132 **502**	
			01/79 →		*Kit 3 (N4)	132 **603**	132 **603**	
	320.30 H		01/84 →		*Kit 3 (N4)	132 **652**	132 **652**	
	320.31 ANW		07/80 → 12/83		*Kit 3 (N4)	132 **603**	132 **603**	
330	330 F35		01/78 →		*Kit 3 (N4)	132 **603**	132 **603**	
	330.25 AN		05/89 →		*Kit 3 (N4)	132 **603**	132 **603**	
	330.26 N		01/79 →		*Kit 3 (N4)	132 **652**	132 **652**	
			01/79 →		*Kit 3 (N4)	132 **603**	132 **603**	
	330.26 P		01/83 → 01/84		*Kit 3 (N4)	132 **652**	132 **652**	
	330.30 AH		05/86 → 05/91		*Kit 3 (N4)	132 **652**	132 **652**	
	330.30 AN		05/86 → 09/90		*Kit 3 (N4)	132 **652**	132 **652**	
			05/86 → 09/90		*Kit 3 (N4)	132 **603**	132 **603**	
	330.30 H		06/84 →		*Kit 3 (N4)	132 **652**	132 **652**	
	330.30 N		10/87 →		*Kit 3 (N4)	132 **603**	132 **603**	
	330.32 ANW		07/83 → 06/87		*Kit 3 (N4)	132 **603**	132 **603**	
			07/83 → 06/87		*Kit 3 (N4)	132 **652**	132 **652**	
	330.35 P		07/80 → 01/92		*Kit 3 (N4)	132 **652**	132 **652**	
	330.36 H, HW		01/89 →		*Kit 3 (N4)	132 **652**	132 **652**	
370	370		→ 08/82		N12/N11/N14	132 **801**	132 **801**	
	370, 370 Domino		09/82 →		22/25/27	132 **000**	132 **000**	
380	380.10.29		01/92 →		22/25/27	132 **000**	132 **000**	

*Kit 1 = 581155 - *Kit 2 = 581156 - *Kit 3 = 581157
(Sold separately - Vendu séparément)

For/Pour								
IVECO (...)								
380	380.12.29		01/92 →		22/25/27	132 **000**	132 **000**	
470	470 AL, AC		01/78 →		***Kit 3** (N4)	132 **603**	132 **603**	
	471		01/82 →		22/25/27	132 **000**	132 **000**	
480	480 AL, AC		01/78 →		***Kit 3** (N4)	132 **603**	132 **603**	
570	571		01/82 →		22/25/27	132 **000**	132 **000**	
600	619, 684, 697		08/77 →		***Kit 3** (N4)	132 **603**	132 **603**	
670	671		01/82 →		22/25/27	132 **000**	132 **000**	
	Autodromo, Dow Town		01/94 →		N12/N11/N14	132 **801**	132 **801**	
	Eicher (Schlepper)		08/75 →		T2/H/R	132 **400**	132 **400**	
ASTRA	HD9		12 →		T8	132 **652**	132 **652**	
DAILY	Daily, Turbo Daily		01/80 → 05/99		***Kit 3** (N8)	132 **603**	132 **603**	
	Daily City		06/99 → 10/00		M10	132 **602**		
			06/99 → 10/00		M10	132 **601**		
			11/00 → 05/14		M10	132 **602**		
			11/00 → 05/14		U	133 **601**	133 **601**	
			11/00 → 05/14		M10	132 **601**		
	Daily / Daily City		06/14 →			119 **311**		
	Daily TOURYS		15 →			119 **311**		
DIANO, CERBIATTO, ORSOTTO					T2/H/R	132 **400**	132 **400**	
EURO	EuroCargo (R1)		01/92 → 12/07		T7	132 **652**	132 **652**	
			01/92 → 12/07		T7	133 **652**	133 **652**	
	EuroCargo		01/08 →		T11	132 **652**	132 **652**	
	EuroFire				T7	132 **652**	132 **652**	
	EuroStar		01/94 → 02		T7	132 **652**	132 **652**	
	EuroTech		01/92 → 00		T7	132 **652**	132 **652**	
	EuroTrakker		01/94 → 12/06		T7	132 **652**	132 **652**	
L	Leoncino, Lupetto				T2/H/R	132 **400**	132 **400**	
M	100		01/83 →		***Kit 3** (N4)	132 **603**	132 **603**	
	120R		01/78 →		***Kit 3** (N4)	132 **603**	132 **603**	
	130D / 170D / 250D / 320D		01/75 → 01/82		***Kit 3** (N4)	132 **603**	132 **603**	
	NKW 80.13, 80.16		01/82 →		***Kit 3** (N4)	132 **603**	132 **603**	
POWERSTAR					T7	132 **652**	132 **652**	
STRALIS			02 → 01/08		T7	132 **652**	132 **652**	
			02 → 01/08		T7	133 **652**	133 **652**	
			02/08 →		T11	132 **652**	132 **652**	
			02/08 →		T11	133 **652**	133 **652**	
	Hi-WAY / Hi-ROAD		10/12 →		T11	132 **652**	132 **652**	
			10/12 →		T11	133 **652**	133 **652**	
	NP		10/12 →		T11	132 **652**	132 **652**	
			10/12 →		T11	133 **652**	133 **652**	
	XP		10/12 →		T11	132 **652**	132 **652**	
			10/12 →		T11	133 **652**	133 **652**	
TRAKKER			02 → 01/08		T7	132 **652**	132 **652**	
			02 → 01/08		T7	133 **652**	133 **652**	
			02/08 →		T11	132 **652**	132 **652**	
			02/08 →		T11	133 **652**	133 **652**	
	Hi-LAND		01/13 →		T11	132 **652**	132 **652**	
			01/13 →		T11	133 **652**	133 **652**	
TURBOSTAR	180.24 ... 330.36		01/77 → 93		***Kit 3** (N4)	132 **652**	132 **652**	
TURBOTECH	13.16, 65.10, 75.16		01/83 →		***Kit 3** (N4)	132 **603**	132 **603**	
	19-30, 19-38		01/81 →		***Kit 3** (N4)	132 **603**	132 **603**	
	180.24 ... 330.36		01/77 → 93		***Kit 3** (N4)	132 **652**	132 **652**	
VOSGES			01/68 → 01/71		T2	132 **400**	132 **400**	
IVECO BUS								
CROSSWAY	Crossway / Crossway LE / Lowentryline / Line (Euro 6)		05/13 →		22/25/27	132 **000**	132 **000**	
EVADYS	Evadys / H / HD (Euro 6)		16 →		22/25/27	132 **000**	132 **000**	
MAGELYS	Magelys / Magelys Lounge (Euro 6)		05/13 →		22/25/27	132 **000**	132 **000**	
URBANWAY	Urbanway (Euro 6)		05/13 →		22/25/27	132 **000**	132 **000**	
JONCKHEERE								
AUTEUIL			01/92 →		N12/N11/N14	132 **801**	132 **801**	
DEAUVILLE	30				22/25/27	132 **000**	132 **000**	

*Kit 1 = 581155 - *Kit 2 = 581156 - *Kit 3 = 581157
(Sold separately -Vendu séparément)

For/Pour								
JONCKHEERE (...)								
DEAUVILLE	65		94 →		22/25/27	132 **000**	132 **000**	
JUBILEE	P35, P90, P599				***Kit 3** (N4)	132 **704**	132 **704**	
LE DEAUVILLE		▼	10/91 →		N12/N11/N14	132 **801**	132 **801**	
		▲	10/91 →		***Kit 3** (N4)	132 **603**	132 **603**	
LE NEUILLY	046.2/046.3		92 →		22/25/27	132 **000**	132 **000**	
MISTRAL	50				16X6m	132 **001**	132 **001**	
	70	▼	99 →		16X6m	132 **001**	132 **001**	
MONACO		▼			N12/N11/N14	132 **801**	132 **801**	
PRO-CITY			04 →		M10	132 **602**		
TRANSIT 2000					22/25/27	132 **000**	132 **000**	
	Midi				22/25/27	132 **000**	132 **000**	
KAROSSA								
RECREO			97 →		N12/N11/N14	132 **801**	132 **801**	
KARSAN								
ATAK			15 →			132 **900**	132 **900**	
STAR			15 →			132 **900**	132 **900**	
KÄSSBOHRER-SETRA								
FLEXMOBIL			→ 01/85		U	132 **502**	132 **502**	
PISTENBULLY PB	36.170 D		11/81 →		***Kit 3** (N4)	132 **652**	132 **652**	
	39.170 DR		11/81 →		***Kit 3** (N4)	132 **652**	132 **652**	
	42.240 D		88 →		N12/N11/N14	132 **801**	132 **801**	
S 110-S 150	S 110, S 120, S 130, S 150		10/67 → 08/77		U	132 **502**	132 **502**	
	S 130, S 130S, S 140ES		01/77 →		***Kit 3** (N4)	132 **603**	132 **603**	
S 209-S 250	S 208, S208 H, S 209, S 209 H		12/77 → 10/83		22/25/27	132 **000**	132 **000**	
	S 208 A		10/80 →		N12/N11/N14	132 **801**	132 **801**	
	S 209, S 210, S 211, S 212, S 213, S 215		08/76 → 11/77		***Kit 3** (N4)	132 **704**	132 **704**	
	S 210, S 210 HR, S 210 HD, S 210 H..		12/77 →		22/25/27	132 **000**	132 **000**	
	S 211, S 211 H..		12/77 →		22/25/27	132 **000**	132 **000**	
	S 212 H, S 212 HR, S 212 RL..		12/77 →		22/25/27	132 **000**	132 **000**	
	S 213 H, S 213 HR, S 213 RL..		12/77 →		22/25/27	132 **000**	132 **000**	
	S 213 HE		87 →		N12/N11/N14	132 **801**	132 **801**	
	S 214 HD../ S 215 HM, S 215 HD, S 215 H..		12/77 →		22/25/27	132 **000**	132 **000**	
	S 215 HDH	▼	09/85 → 06/91		22/25/27	132 **000**	132 **000**	
	S 215 HDS	▼	07/80 → 09/83		22/25/27	132 **000**	132 **000**	
	S 215 HR.., S 215 RL, S 215 SL, S 215 UL		06/79 →		22/25/27	132 **000**	132 **000**	
	S 215 NR		07/91 →		22/25/27	132 **000**	132 **000**	
	S 216 HDS	▼	07/80 →		22/25/27	132 **000**	132 **000**	
	S 217 HDH-E		94 →		22/25/27	132 **000**	132 **000**	
	S 228 DT	▼	03/82 →		N15	132 **900**	132 **900**	
	S 250 Spécial		05/94 →		22/25/27	132 **000**	132 **000**	
	SG 219/SG 219 SL		09/84 →		22/25/27	132 **000**	132 **000**	
	SG 221 UL		09/84 →		22/25/27	132 **000**	132 **000**	
S 300-S 328	S 300 N, S 300 NC		89 → 02/92		22/25/27	132 **000**	132 **000**	
	S 300 N....		03/92 →		22/25/27	132 **000**	132 **000**	
	S 309 HD		07/91 →		16X6m	132 **001**	132 **001**	
	S 312 HD		07/91 →		16X6m	132 **001**	132 **001**	
	S 313 UL		07/91 →		22/25/27	132 **000**	132 **000**	
	S 315 GT		09/94 →		16X6m	132 **001**	132 **001**	
	S 315 GT-HD		09/96 →		16X6m	132 **001**	132 **001**	
	S 315 H		09/94 →		22/25/27	132 **000**	132 **000**	
	S 315 HD		07/91 →		16X6m	132 **001**	132 **001**	
	S 315 HDH	▼	07/91 →		16X6m	132 **001**	132 **001**	
	S 315 HDH-3				22/25/27	132 **000**	132 **000**	
	S 315 NF		07/91 →		16X6m	132 **001**	132 **001**	
	S 315 UL		09/94 →		16X6m	132 **001**	132 **001**	
	S 317 GT-HD		11/99 →		16X6m	132 **001**	132 **001**	
	S 317 HDH-3		09/97 →		22/25/27	132 **000**	132 **000**	
	S 319 GT-HD		12/98 →		16X6m	132 **001**	132 **001**	
	S 319 NF		12/97 →		16X6m	132 **001**	132 **001**	
	S 319 UL		07/91 →		16X6m	132 **001**	132 **001**	
	S 328 DT	▼	07/91 →		N15	132 **900**	132 **900**	

*Kit 1 = 581155 - *Kit 2 = 581156 - *Kit 3 = 581157
(Sold separately - Vendu séparément)

For/Pour								
KÄSSBOHRER-SETRA (...)								
S 300-S 328	SG 321 UL		08/95 →		16X6m	132 **001**	132 **001**	
S 400	S 411 HD		01 →		16X6m	132 **001**	132 **001**	
	S 415 GT		01 →		16X6m	132 **001**	132 **001**	
	S 415 GT HD		01 →		16X6m	132 **001**	132 **001**	
	S 415 H		01 →		16X6m	132 **001**	132 **001**	
	S 415 NF		01 →		16X6m	132 **001**	132 **001**	
	S 416	▼	01 →		16X6m	132 **001**	132 **001**	
		▲	01 →		T8	132 **603**	132 **603**	
	S 416 GT HD		01 →		16X6m	132 **001**	132 **001**	
	S 416 HDH	▼	01 →		16X6m	132 **001**	132 **001**	
	S 417 GT HD / S 417 UL	▼	01 →		16X6m	132 **001**	132 **001**	
	S 431 DT	▼	01 →		16X6m	132 **001**	132 **001**	
		▲			T8	132 **702**		
S 80-S 150	S 80		10/67 → 08/77		U	132 **502**	132 **502**	
	S 150		01/67 →		U	132 **502**	132 **502**	
S 9-S 14	S 9, S 14		01/67 →		U	132 **502**	132 **502**	
U	U 80		80 →		N12/N11/N14	132 **801**	132 **801**	
KHD								
M 120, M 130, M 145			01/71 → 01/74		***Kit 3** (N4)	132 **603**	132 **603**	
M 230, M 232, M 270, M 290			01/71 → 01/74		***Kit 3** (N4)	132 **603**	132 **603**	
KING LONG								
E 12					22/25/27	132 **000**	132 **000**	
XMQ	6120AGD5				22/25/27	132 **000**	132 **000**	
	6120C				22/25/27	132 **000**	132 **000**	
	6129BYD5				22/25/27	132 **000**	132 **000**	
	6130Y / C				22/25/27	132 **000**	132 **000**	
	6800 AGD Citylife				22/25/27	132 **000**	132 **000**	
	6900Y / H / 6996Y				22/25/27	132 **000**	132 **000**	
LAG								
GALAXY					22/25/27	132 **000**	132 **000**	
LEYLAND								
7.1			01/76 →		T2/H/R	132 **400**	132 **400**	
ATLANTEAM BUS, NATIONAL			01/77 →		***Kit 3** (N4)	132 **603**	132 **603**	
BISON 2			01/78 →		***Kit 3** (N4)	132 **603**	132 **603**	
CONSTRUCTOR			01/79 →		***Kit 3** (N4)	132 **603**	132 **603**	
CRUISER			01/80 →		***Kit 3** (N4)	132 **603**	132 **603**	
FREIGHTER			01/80 →		***Kit 3** (N4)	132 **603**	132 **603**	
LANDTRAIN			01/80 →		***Kit 3** (N4)	132 **603**	132 **603**	
MARATHON			01/74 → 01/77		***Kit 3** (N4)	132 **603**	132 **603**	
OCTOPUS	2		01/78 →		***Kit 3** (N4)	132 **603**	132 **603**	
OLYMPIAN			01/79 →		***Kit 3** (N4)	132 **603**	132 **603**	
ROADTRAIN			01/79 →		***Kit 3** (N4)	132 **603**	132 **603**	
ROYAL TIGER B 54			03/83 →		22/25/27	132 **000**	132 **000**	
LEYLAND DAF								
LDV	Convoy		09/96 →		U	132 **502**	132 **502**	
	Maxus		07 →		U	132 **502**	132 **502**	
MACK								
E9-500					U	132 **502**	132 **502**	
MS 200 M 300 (MIDLINER)			11/79 →		U	132 **502**	132 **502**	
MAN								
11	11 UE 210		→ 12/73		***Kit 3** (N4)	132 **704**	132 **704**	
	11 UE 230		11/72 → 12/75		U	132 **502**	132 **502**	
12	12 UE 210		→ 12/73		***Kit 3** (N4)	132 **704**	132 **704**	
	12 UE 230		11/72 → 12/75		U	132 **502**	132 **502**	
750	750 HO (VÖV)		→ 12/71		***Kit 3** (N4)	132 **704**	132 **704**	
7-32	7.126 ... 32.280 DH		06/66 → 12/79		T2/H/R	132 **400**	132 **400**	
	7.126 ... 32.280 H		06/66 → 12/79		T2/H/R	132 **400**	132 **400**	
5-38	5.12 ... 38.320 F		07/72 → 12/85		U	132 **502**	132 **502**	
	5.125 ... 38.320 U		07/72 → 12/85		U	132 **502**	132 **502**	
7-48	7.126 ... 48.700 DH		11/79 → 03/86		U	132 **502**	132 **502**	

*Kit 1 = 581155 - *Kit 2 = 581156 - *Kit 3 = 581157
(Sold separately -Vendu séparément)

For/Pour								
MAN (...)								
17-32	17.240 ... 32.321		08/82 → 88		U	132 **502**	132 **502**	
A-B	AK 14, AK 16, S 16		01/68 →		U	132 **502**	132 **502**	
	BS 12L, BS 19K		01/68 →		U	132 **502**	132 **502**	
ALE	Alé Euro 3		00 →		22/25/27	132 **000**	132 **000**	
CLA			12 →		U	132 **502**	132 **502**	
F 90	(19.242 ... 48.462)		01/86 → 09/94		T7	132 **603**	132 **603**	
			01/86 → 09/94		T7	133 **602**	133 **602**	
F 2000	(19.343 ... 48.463)		10/94 →		T7	132 **603**	132 **603**	
			10/94 →		T7	133 **602**	133 **602**	
FE 2000	FE 600A / FE 460A				T7	132 **603**	132 **603**	
G 90	(4.70 ... 9.136)		→ 10/79		T2	132 **400**	132 **400**	
			11/79 → 12/94		U	132 **502**	132 **502**	
L 2000	(8.103 ... 10.223)		01/94 →		U	132 **502**	132 **502**	
LION'S CITY	e-Mobility				16X6m	132 **901**	132 **901**	
	GLC NG				16X6m	132 **901**	132 **901**	
	L LE				16X6m	132 **901**	132 **901**	
LION'S COACH	FRH 353		09/96 →		22/25/27	132 **000**	132 **000**	
	Coach (Euro 6)		2016 →		22/25/27	132 **000**	132 **000**	
	Coach C (Euro 6)		2016 →		22/25/27	132 **000**	132 **000**	
	Coach L (7500) (Euro 6)		2016 →		22/25/27	132 **000**	132 **000**	
	RH 403				22/25/27	132 **000**	132 **000**	
	RH 463		99 →		22/25/27	132 **000**	132 **000**	
	Supreme (Euro 6)		2015 →		22/25/27	132 **000**	132 **000**	
LION'S COMFORT	RN 313 / 353 / R 353		09/96 →		16X6m	132 **001**	132 **001**	
LION'S MIDI	MN 283				N12/N11/N14	132 **801**	132 **801**	
LION'S REGIO	Lion's Régio		04 →		22/25/27	132 **000**	132 **000**	
LION'S STAR	Lion's Star		04 →		22/25/27	132 **000**	132 **000**	
	FRH 402		93 → 04		16X6m	132 **001**	132 **001**	
	FRH 422		93 → 04		16X6m	132 **001**	132 **001**	
	RH 403				16X6m	132 **001**	132 **001**	
	RH 463		92 → 04		16X6m	132 **001**	132 **001**	
L-K	L 09, L 14, L 19, K 22		01/68 →		U	132 **502**	132 **502**	
M	90 (12.152 ... 18.232)		01/86 → 12/96		T7	132 **603**	132 **603**	
			01/86 → 12/96		T7	133 **602**	133 **602**	
M 2000	L		04/96 → 10/05		U	132 **502**	132 **502**	
	M		04/96 → 10/05		T7	132 **603**	132 **603**	
			04/96 → 10/05		T7	133 **602**	133 **602**	
NG	272		89 →		N12/N11/N14	132 **801**	132 **801**	
	312				N12/N11/N14	132 **801**	132 **801**	
	313				16X6m	132 **901**	132 **901**	
NL	202		09/89 →		N12/N11/N14	132 **801**	132 **801**	
	222				N12/N11/N14	132 **801**	132 **801**	
	223		99 →		16X6m	132 **901**	132 **901**	
	232				N12/N11/N14	132 **801**	132 **801**	
	262				N12/N11/N14	132 **801**	132 **801**	
	263				16X6m	132 **901**	132 **901**	
	312				N12/N11/N14	132 **801**	132 **801**	
	313				16X6m	132 **901**	132 **901**	
					16X6m	132 **901**	132 **901**	
					16X6m	132 **901**	132 **901**	
	353		99 →		16X6m	132 **901**	132 **901**	
NM	152		89 → 97		N12/N11/N14	132 **801**	132 **801**	
NU	263		09/96 →		16X6m	132 **001**	132 **001**	
	313				16X6m	132 **901**	132 **901**	
SD	200	◫	10/78 → 11/86		***Kit 3** (N4)	132 **704**	132 **704**	
	202		08/85 → 94		N12/N11/N14	132 **801**	132 **801**	
SG	SG 192, SL 192, SL 260		→ 12/76		***Kit 3** (N4)	132 **704**	132 **704**	
	SG 220/240 H, HU	◫	05/80 → 01/86		***Kit 3** (N4)	132 **704**	132 **704**	
	SG 240 H		08/85 →		N12/N11/N14	132 **801**	132 **801**	
	SG 242/SG 242 H		85 → 94		N12/N11/N14	132 **801**	132 **801**	
	SG 292		85 →		N12/N11/N14	132 **801**	132 **801**	
SL	200		08/85 → 87		N12/N11/N14	132 **801**	132 **801**	
		◫	10/78 → 04/87		***Kit 3** (N4)	132 **704**	132 **704**	

***Kit 1 = 581155 - *Kit 2 = 581156 - *Kit 3 = 581157**
(Sold separately - Vendu séparément)

For/Pour								
MAN (...)								
SL	202		06/84 → 94		N12/N11/N14	132 **801**	132 **801**	
SR	240 / 280		08/77 → 86		22/25/27	132 **000**	132 **000**	
	240 / 280 / 321 / 361	◫	10/75 → 11/86		***Kit 3** (N4)	132 **704**	132 **704**	
	321		81 → 86		22/25/27	132 **000**	132 **000**	
	362		85 → 86		22/25/27	132 **000**	132 **000**	
SU	240		85 → 89		N12/N11/N14	132 **801**	132 **801**	
		◫	10/75 → 84		***Kit 3** (N4)	132 **704**	132 **704**	
	242		85 → 87		N12/N11/N14	132 **801**	132 **801**	
			87 →		22/25/27	132 **000**	132 **000**	
	310		99 →		16X6m	132 **901**	132 **901**	
TG	TG				T7	132 **704**	132 **704**	
			09/00 →		T7	133 **653**	133 **653**	
	TGA		09/04 →		T7	132 **704**	132 **704**	
			09/04 →		T7	133 **653**	133 **653**	
	TGL		05/05 →		T7	132 **704**	132 **704**	
			05/05 →		T7	133 **653**	133 **653**	
	TGM		11/05 →		T7	132 **704**	132 **704**	
			11/05 →		T7	133 **653**	133 **653**	
	TGS		08 →		T7	132 **704**	132 **704**	
			08 →		T7	133 **653**	133 **653**	
	TGX / V8		08 →		T7	132 **704**	132 **704**	
			08 →		T7	133 **653**	133 **653**	
U	U 80		84 →		N12/N11/N14	132 **801**	132 **801**	
UL	Bus Economy / FRH Economy		08/77 →		22/25/27	132 **000**	132 **000**	
	D 80, G 80, S 80				N12/N11/N14	132 **801**	132 **801**	
	FR/FRH 280		08/77 →		22/25/27	132 **000**	132 **000**	
	R/FR/FRH 292		85 →		22/25/27	132 **000**	132 **000**	
	RU 240		85 →		22/25/27	132 **000**	132 **000**	
	UL 272		87 →		22/25/27	132 **000**	132 **000**	
	UL 313		09/96 →		16X6m	132 **001**	132 **001**	
	UL 353		99 →		16X6m	132 **001**	132 **001**	
MARCOPOLO								
ANDARE						132 **000**		
VIAGGIO	GII 330					132 **000**		
	GII 350					132 **000**		
	GII 370					132 **000**		
MAZDA								
B 2000, B 2200, B 2600			01/84 →		T2	132 **451**	132 **451**	
E 2000, E 2200			01/84 →		T2	132 **400**	132 **400**	
LT 35					U	132 **502**	132 **502**	
T 2500, T 3000, T 3500			01/81 →		T2	132 **400**	132 **400**	
MCV								
MCV	600				22/25/27	132 **000**	132 **000**	
MCW								
METRO			01/80 →		***Kit 3** (N4)	132 **603**		
METROBUS			01/83 →		***Kit 3** (N4)	132 **704**	132 **704**	
METROLINER		▼	01/83 →		N12/N11/N14	132 **801**	132 **801**	
MERCEDES-BENZ								
ACCELO	Accelo 815 / 915 / 1016				T7	132 **603**	132 **603**	
ACTROS			01/97 → 09/02		T8	132 **702**	132 **702**	
			01/97 → 09/02		U	133 **700**	133 **700**	
	MP2 / MP3		10/02 → 13		T8	132 **702**	132 **702**	
			10/02 → 13		U	133 **700**	133 **700**	
	MP4 (Euro 5 / Euro 6)	Clips	10/11 →		T7	132 **703**	132 **703**	
			10/11 →		T7	132 **705**	132 **705**	
ANTOS	Antos	Clips	09/12 →		T7	132 **703**	132 **703**	
			09/12 →		T7	132 **705**	132 **705**	
AROCS	Arocs	Clips	01/13 →		T7	132 **703**	132 **703**	
			01/13 →		T7	132 **705**	132 **705**	
ATEGO	1		04/98 → 10/04		T8	132 **652**	132 **652**	
			04/98 → 10/04		U	133 **650**	133 **650**	

*Kit 1 = 581155 - *Kit 2 = 581156 - *Kit 3 = 581157
(Sold separately -Vendu séparément)

For/Pour

▶ MERCEDES-BENZ (...)

ATEGO	2 (Euro 6)		10/04 →		T8	132 **652**	132 **652**	
			10/04 →		U	133 **650**	133 **650**	
AXOR	1		09/01 → 10/04		T8	132 **652**	132 **652**	
			09/01 → 10/04		U	133 **650**	133 **650**	
	2		10/04 → 12		T8	132 **652**	132 **652**	
			10/04 → 12		U	133 **650**	133 **650**	
CITARO	(O 530)		98 → 15		16X6m	132 **901**	132 **901**	
CITO	(O 520)		97 →		16X6m	132 **001**	132 **001**	
CITYLINER	1220 / L - 1224/ L		→ 97		T7	132 **652**	132 **652**	
	1320 / L		→ 97		T7	132 **652**	132 **652**	
	1520 / L - 1524 / L		→ 97		T7	132 **652**	132 **652**	
CITYLINER ECOPOWER	812 - 814 / L - 817 / L / S		→ 97		T7	132 **652**	132 **652**	
	914 R - 917 R		→ 97		T7	132 **652**	132 **652**	
	1114 - 1117 / L		→ 97		T7	132 **652**	132 **652**	
	1120 LS		→ 97		T7	132 **652**	132 **652**	
	1217 / L		→ 97		T7	132 **652**	132 **652**	
	1317 / L - 1324 LS		→ 97		T7	132 **652**	132 **652**	
	1517		→ 97		T7	132 **652**	132 **652**	
ECONIC	1828 / 2628 / 2828		09/00 →		T7	132 **603**	132 **603**	
	1830LL / 1835LL / 2630LL / 2635LL		13 →		T7	132 **603**	132 **603**	
INTEGRO					16X6m	132 **001**	132 **001**	
INTOURO	EEV				16X6m	132 **001**	132 **001**	
	M		15 →		16X6m	132 **001**	132 **001**	
L	L, LA, LAK, LAS, LK, LS		01/70 →		U	132 **502**	132 **502**	
	LK 709 ... 1524		01/93 →		T8	132 **603**	132 **603**	
	LN2 709 ... 1324		06/84 → 01/93		T7	132 **603**	132 **603**	
	LP, LPS, LPK, LPL, LPLS		01/70 →		U	132 **502**	132 **502**	
	L 206, L 207, L 306, L 307		→ 01/77		T2	132 **400**	132 **400**	
	L 310		01/60 →		***Kit 3** (N8)	132 **603**	132 **603**	
MB	90, 100, 120, 140, 160, 180		12/80 → 12/90		U	132 **502**	132 **502**	
	100 D		01/91 →		U	132 **502**	132 **502**	
	800 T		→ 12/90		U	132 **502**	132 **502**	
	Trac 65, 70		→ 12/75		T2/H/R	132 **400**	132 **400**	
	Trac 700, 800, 900		01/81 → 12/90		U	132 **502**	132 **502**	
	Trac 1000, 1100, 1300, 1500, 1550		02/76 → 12/90		U	132 **502**	132 **502**	
NG	80 1013 ... 3535		10/73 → 12/85		***Kit 3** (N4)	132 **704**	132 **704**	
	80 1013 ... 3850		01/86 → 12/88		***Kit 3** (N4)	132 **652**	132 **652**	
	90 1222 ... 3233 MK		01/89 → 97		T7	132 **652**	132 **652**	
			01/89 → 97		T7	133 **652**	133 **652**	
	90 1729 ... 4850 SK		01/89 → 97		T7	132 **652**	132 **652**	
			01/89 → 97		T7	133 **652**	133 **652**	
O 301	(LN2)		01/85 → 05/86		T7	132 **603**	132 **603**	
			06/86 → 87		T8	132 **603**	132 **603**	
O 302	ST		08/68 → 75		***Kit 1** (N6 / N9)	132 **502**	132 **502**	
	U		10/71 → 75		***Kit 3** (N4)	132 **704**	132 **704**	
O 303	O 303	◫	09/74 → 09/92		***Kit 3** (N4)	132 **704**	132 **704**	
		▭	10/79 → 09/92		N15	132 **900**	132 **900**	
			10/79 → 09/92		22/25/27	132 **000**	132 **000**	
			05/85 → 09/92		22/25/27	132 **000**	132 **000**	
O 305 - 0350	O 305, O 307		11/76 → 05/87		***Kit 3** (N4)	132 **704**	132 **704**	
	O 309, O 309 D		01/69 → 89		U	132 **502**	132 **502**	
	O 310		01/80 → 89		***Kit 3** (N8)	132 **603**	132 **603**	
	O 317 (Interurban)		08/68 →			132 **502**	132 **502**	
	O 350		94 →		16X6m	132 **001**	132 **001**	
O 402	O 402		86 → 91		N12/N11/N14	132 **801**	132 **801**	
O 404	O 404 RH		09/91 → 99		16X6m	132 **001**	132 **001**	
	O 404 RHD		09/91 → 99		16X6m	132 **001**	132 **001**	
	O 404 SHD		09/91 → 99		16X6m	132 **001**	132 **001**	
O 405	O 405 N/GN/GNV/NU/GNU/NUL/NK ...	◫	10/84 →		N12/N11/N14	132 **801**	132 **801**	
		▭	10/89 →		N15	132 **900**	132 **900**	
	O 407		03/87 → 01		22/25/27	132 **000**	132 **000**	

*Kit 1 = 581155 - *Kit 2 = 581156 - *Kit 3 = 581157
(Sold separately - Vendu séparément)

For/Pour								
MERCEDES-BENZ (...)								
O 405	O 408		01/91 → 98		22/25/27	132 **000**	132 **000**	
O 412	O 412 D		05/95 → 05/06		T8/T16	132 **603**	132 **551**	
O 550	O 550				16X6m	132 **001**	132 **001**	
	O 550 H		97 →		16X6m	132 **001**	132 **001**	
	O 550 Integro		96 →		16X6m	132 **001**	132 **001**	
O 600	O 609, O 611, O 614		07/87 →		T8	132 **603**	132 **603**	
POWERLINER	Powerliner		→ 97		T7	132 **652**	132 **652**	
			→ 97		T7	133 **652**	133 **652**	
SPRINTER	Sprinter 208D ... 412D		05/95 → 05/06		T8/T16	132 **603**	132 **551**	
	Sprinter		06/06 →			119 **407**		119 **508**
			06/06 →			119 **409**		119 **508**
T	T1: 207D ... 410D		01/77 → 04/95		U	132 **502**	132 **502**	
	T1: 507D ... 709D		→ 02/84		U	132 **502**	132 **502**	
	T2: 507D ... 817D		03/84 → 05/86		T7	132 **603**	132 **603**	
			06/86 →		T8	132 **603**	132 **603**	
TOURINO			04 →		N15	132 **900**	132 **900**	
TOURISMO	TOURISMO		10/95 →		16X6m	132 **001**	132 **001**	
	L		15 →		16X6m	132 **001**	132 **001**	
TRAVEGO	TRAVEGO		01/97 →		16X6m	132 **001**	132 **001**	
	M		15 →		16X6m	132 **001**	132 **001**	
UNIMOG	U 20				T7	132 **603**	132 **603**	
	U 84, 100, 110		12/76 → 05/89		U	132 **502**	132 **502**	
	U90, 100 L, 110, 110 L, 140, 140 L		07/92 →		U	132 **502**	132 **502**	
	U120, 425		02/76 →		U	132 **502**	132 **502**	
	U300 / U400 / U500				T7	132 **704**	132 **704**	
	U1000, 1200 ..... 2450 L, T, L/38		02/76 →		U	132 **502**	132 **502**	
	U1650				U	132 **502**	132 **502**	
	U4023 / U5000 / U5023				U	132 **502**	132 **502**	
	UX 100		09/96 →		T7	132 **652**	132 **652**	
VARIO	Vario		09/96 →		T8	132 **603**	132 **603**	
VITO / CLASSE V	Viano		11/05 →			119 **398**		
	Vito		09/95 → 08/03		M10/ T2	116 **153**	116 **154**	132 **400**
			09/95 → 08/03		M10	116 **153**	116 **154**	
			11/05 →			119 **398**		
WRIGTHBUS	Wrigth OF917 RFC				***Kit 3** (N4)	132 **704**	132 **704**	
ZETROS	1833A / 2733A				U	132 **502**	132 **502**	
MITSUBISHI								
CANTER			80 → 86		T2/H/R	132 **400**	132 **400**	
			87 → 96		T2	132 **451**	132 **451**	
FUSO			01/76 →		T2/H/R	132 **400**	132 **400**	
FUSO/CANTER	Canter 3S11, 3S13, 5S13		97 → 11		U	132 **502**	132 **502**	
	Canter 3C11, 3C13, 3C15, 5C15		03 → 11		U	116 **166**	116 **166**	
	Canter 6C15, 6C18, 7C15, 7C18		03 → 11		U	116 **166**	116 **166**	
	Canter / E-Canter		12 →		U	132 **502**	132 **502**	
			12 →		U	116 **126**	116 **126**	
L 200			10/96 → 02/06		U	132 **502**	132 **502**	
			03/06 →		U	116 **166**		
L 300			01/80 → 86		T2/H/R	132 **400**	132 **400**	
			91 →		T2	132 **451**	132 **451**	
NEOPLAN								
CENTROLINER	N4407				N12/N11/N14	132 **801**	132 **801**	
	N4411 / N4426...				16X6m	132 **901**	132 **901**	
		◫			N15	132 **900**	132 **900**	
	N4416 / 4416 U		99 →		N12/N11/N14	132 **801**	132 **801**	
CITYLINER	N116	▼	75 → 99		***Kit 3** (N4)	132 **704**	132 **704**	
			09/00 → 14		16X6m	132 **001**	132 **001**	
	N116 ...	▲	02/86 →		U	116 **166**	116 **166**	
			02/86 →		N12/N11/N14	132 **801**	132 **801**	
	N1116...	▼			***Kit 3** (N4)	132 **704**	132 **704**	
		▲			N12/N11/N14	132 **801**	132 **801**	
	N116 H	▼	75 →		***Kit 3** (N4)	132 **704**	132 **704**	

*Kit 1 = 581155 - *Kit 2 = 581156 - *Kit 3 = 581157
(Sold separately -Vendu séparément)

For/Pour

NEOPLAN (...)

CITYLINER	N116 H/3	▼	75 →		*Kit 3 (N4)	132 **704**	132 **704**	
	N116/2	▼	75 →		*Kit 3 (N4)	132 **704**	132 **704**	
	N116/3	▼	75 →		*Kit 3 (N4)	132 **704**	132 **704**	
	N122/2	▼	10/81 →		22/25/27	132 **000**	132 **000**	
		▲	08/83 → 01/86		*Kit 3 (N4)	132 **704**	132 **704**	
			02/86 →		N12/N11/N14	132 **801**	132 **801**	
	Cityliner (Euro 6)	▼	15 →		N12/N11/N14	132 **801**	132 **801**	
COMBILINER	Combiliner		10/85 →		22/25/27	132 **000**	132 **000**	
EUROLINER	N313SHD				16X6m	132 **001**	132 **001**	
	N3316 UL / N3316 SHD / N3316 K				16X6m	132 **001**	132 **001**	
JETLINER	N208		10/81 →		22/25/27	132 **000**	132 **000**	
	N212 H/SHD		10/81 →		22/25/27	132 **000**	132 **000**	
	N213 H/SHD		10/81 →		22/25/27	132 **000**	132 **000**	
	N214 H/SHD		10/81 →		22/25/27	132 **000**	132 **000**	
	N216 H/SHD/Panorama		10/81 →		22/25/27	132 **000**	132 **000**	
JUMBOCRUISER	N138	▼	10/81 →		22/25/27	132 **000**	132 **000**	
		▲	08/83 → 01/86		*Kit 3 (N4)	132 **704**	132 **704**	
			02/86 →		N12/N11/N14	132 **801**	132 **801**	
MEGALINER	N128/4 Megaliner	▼			*Kit 3 (N4)	132 **704**	132 **704**	
		▲			N12/N11/N14	132 **801**	132 **801**	
	N128/4 Megaspace	▼			*Kit 3 (N4)	132 **704**	132 **704**	
		▲			N12/N11/N14	132 **801**	132 **801**	
METROLINER	N116 M/MK		10/81 →		22/25/27	132 **000**	132 **000**	
	N316		10/85 →		22/25/27	132 **000**	132 **000**	
	N8008, 8012 MIC		92 →		16X6m	132 **001**	132 **001**	
SKYLINER	N122/3	▼	02/86 → 12/09		*Kit 3 (N4)	132 **704**	132 **704**	
		▲	02/86 → 12/09		N12/N11/N14	132 **801**	132 **801**	
	N122/3 P, N122/3 L, 1122…	▼	02/86 → 12/09		*Kit 3 (N4)	132 **704**	132 **704**	
	N122/3 P, N122/3 L, 1122...	▲	02/86 → 12/09		N12/N11/N14	132 **801**	132 **801**	
SPACELINER	N117/2	▼	08/82 →		*Kit 3 (N4)	132 **704**	132 **704**	
		▲	02/86 →		N12/N11/N14	132 **801**	132 **801**	
	N117/3	▼	08/82 →		*Kit 3 (N4)	132 **704**	132 **704**	
		▲	02/86 →		N12/N11/N14	132 **801**	132 **801**	
STARLINER	516…	▼			N12/N11/N14	132 **801**	132 **801**	
TOURLINER	2216…		→ 16		22/25/27	132 **000**	132 **000**	
	Tourliner (Euro 6)		16 →		22/25/27	132 **000**	132 **000**	
TRANSLINER	N312		91 →		16X6m	132 **001**	132 **001**	
	N314		91 →		16X6m	132 **001**	132 **001**	
	N316 K		89 → 91		22/25/27	132 **000**	132 **000**	
	N316 L/U/K/SHD		91 →		16X6m	132 **001**	132 **001**	
	N318		91 →		16X6m	132 **001**	132 **001**	
	N321 U		91 →		16X6m	132 **001**	132 **001**	
	N407 SKI		81 →		N12/N11/N14	132 **801**	132 **801**	
	N4008, N 4012, N 4017 MIC		89 →		16X6m	132 **001**	132 **001**	
	SU N416		89 →		22/25/27	132 **000**	132 **000**	
	Unibus N 906, N907/Telebus		82 →		N12/N11/N14	132 **801**	132 **801**	

NISSAN

ATLEON			00 →		T8 T16	132 **603**	132 **551**	
CABSTAR			01/84 → 92		T2	132 **451**	132 **451**	
	E 75		07/92 → 07		T2	132 **451**	132 **451**	
	E 95		07/92 → 07		T2	132 **451**	132 **451**	
	E 110		07/92 → 07		T2	132 **451**	132 **451**	
			08 →		U	132 **502**	132 **502**	
ECO-T	100		09/96 →		U	132 **502**	132 **502**	
	135		09/96 →		U	132 **502**	132 **502**	
	160				U	132 **502**	132 **502**	
	200				U	132 **502**	132 **502**	
INTERSTAR			02/02 → 09/11		M10	132 **602**		
			02/02 → 09/11		U	133 **601**	133 **601**	
			02/02 → 09/11		M10	132 **601**		
KUBISTAR			11/03 →		U	132 **502**	132 **502**	
L 35					U	132 **502**	132 **502**	

*Kit 1 = 581155 - *Kit 2 = 581156 - *Kit 3 = 581157
(Sold separately - Vendu séparément)

For/Pour								
NISSAN (...)								
NT400 Cabstar			2014 →		U	132 **502**	132 **502**	
NV200			12/09 →		U T2	116 **166**	132 **400**	
NV400			10/11 →		T11	132 **652**	132 **652**	
			10/11 →		U	133 **650**	133 **650**	
PRIMASTAR			03/02 →		M10	116 **340**		
TRADE			01/86 → 00		U	132 **502**	132 **502**	
URVAN			01/81 →		T2	132 **451**	132 **451**	
VANETTE			→ 08/86		T2	132 **400**	132 **400**	
			09/86 → 05/95		U	132 **502**	132 **502**	
	Cargo		06/95 →		T8	132 **603**	132 **603**	
NOGE								
GREGAL		▼			22/25/27	132 **000**	132 **000**	
TOURING			96 →		22/25/27	132 **000**	132 **000**	
	Touring Star		96 →		22/25/27	132 **000**	132 **000**	
OBRADOR								
ST 5 C, ST 400		▼	94 →		22/25/27	132 **000**	132 **000**	
		▲	94 →		N12/N11/N14	132 **801**	132 **801**	
SW 360					22/25/27	132 **000**	132 **000**	
OMNIBUS								
SUNDANCER					22/25/27	132 **000**	132 **000**	
SUNRIDER			→ 11		22/25/27	132 **000**	132 **000**	
	Sunrider		11 →		U		116 **166**	
SUNRISE	Sunrise				M10	132 **602**		
SUNSET			→ 05/06		T8 T16	132 **603**	132 **551**	
	Sunset X / Sunset XL		06 →		M10	132 **602**		
OPEL								
COMBO			93 → 09/01		T2	132 **451**	132 **451**	
			10/01 → 10/11		U T2	132 **502**	132 **400**	
MOVANO			09/98 → 10/99		M10	132 **602**		
OPEL / VAUXHALL								
MOVANO			09/98 → 10/99		M10	132 **601**		
OPEL								
MOVANO			11/99 → 04/10		M10	132 **602**		
			11/99 → 04/10		U	133 **601**	133 **601**	
OPEL / VAUXHALL								
MOVANO			11/99 → 04/10		M10	132 **601**		
OPEL								
MOVANO			05/10 →		T11	132 **652**	132 **652**	
			05/10 →		U	133 **650**	133 **650**	
OPEL / VAUXHALL								
MOVANO			05/10 →		T11	132 **652**	132 **652**	
OPEL								
VIVARO			06/01 →		M10	116 **340**		
OPTARE								
CITY PACER			01/86 →		22/25/27	132 **000**	132 **000**	
OTOKAR								
KENT C			01/86 →		22/25/27	132 **000**	132 **000**	
NAVIGO U			02 →		N12/N11/N14	132 **801**	132 **801**	
TERRITO U			11 →		22/25/27	132 **000**	132 **000**	
VECTIO C			04/07 →		22/25/27	132 **000**	132 **000**	
VECTIO T			04/07 →		22/25/27	132 **000**	132 **000**	
VECTIO U			04/07 →		22/25/27	132 **000**	132 **000**	
PADANE								
PADANE X/Z					22/25/27	132 **000**	132 **000**	
PEGASO								
1080-1186	1080, 1083, 1086, 1135, 1145		01/74 → 01/81		T2	132 **451**	132 **451**	

*Kit 1 = 581155 - *Kit 2 = 581156 - *Kit 3 = 581157
(Sold separately -Vendu séparément)

For/Pour								
PEGASO (...)								
1080-1186	1080, 1083, 1086, 1135, 1145		02/81 → 01/86		U	132 **502**	132 **502**	
	1180, 1181, 1183, 1184, 1186		01/87 →		U	132 **502**	132 **502**	
	1080, 1083, 1086, 1135, 1145		02/87 →		U	132 **502**	132 **502**	
1190-2135	1190, 1231, 2080, 2081, 2082		01/87 →		U	132 **502**	132 **502**	
1226-2331	1234R, 2217, 2323, 2331		01/85 →		U	132 **502**	132 **502**	
	1226, 1226T, 1236, 2331K		09/88 →		T7	132 **560**	132 **560**	
2080-3088	2080, 2082, 2089, 3088		01/74 → 12/81		T2	132 **451**	132 **451**	
2180-2190	2180, 2181, 2189		01/78 → 12/81		T2	132 **451**	132 **451**	
	2180, 2181, 2182, 2189, 2190		01/87 →		U	132 **502**	132 **502**	
3080-3189	3080, 3180, 3181, 3188, 3189		01/87 →		U	132 **502**	132 **502**	
	Serie 260		01/90 →		U	132 **502**	132 **502**	
	Serie Mider		01/91 →		U	132 **502**	132 **502**	
	Serie Obras		01/91 →		U	132 **502**	132 **502**	
	Serie Troner		09/87 →		T7	132 **560**	132 **560**	
	Tecno 1223, 1231, 1234, 1331		09/88 →		U	132 **502**	132 **502**	
	Tecno 2323, 2331		09/88 →		U	132 **502**	132 **502**	
PEUGEOT								
BOXER	1		02/94 → 06/06		U	116 **166**	116 **166**	
	2		07/06 →			119 **416**		
EXPERT	1		10/95 → 12/06		T11 U	132 **652**	132 **502**	
J5			01/82 → 02/94		U	132 **502**	132 **502**	
J7, J9			06/65 → 12/79		T2/H/R	132 **400**	132 **400**	
PARTNER	1/ -Origin		01/97 → 10/02		T2			132 **400**
	2		05/08 →			119 **429**		
PIAGGIO								
PORTER / TIPPER / QUARGO			01/98 →		T2	132 **400**	132 **400**	
PLAXTON								
PARAMOUNT	3200, 3500		81 →		22/25/27	132 **000**	132 **000**	
POCLAIN								
PELLE MECANIQUE			01/90 →		22/25/27	132 **000**		
POLMOT								
JELCZ 317, STAR			01/80 →		T2/H/R	132 **400**	132 **400**	
JELCZ O 80			01/80 →		***Kit 3** (N4)	132 **603**		
RENAULT TRUCKS (R.V.I.)								
15....32T	15 168 … 19 168		74 →		T2/H/R	132 **400**	132 **400**	
	26 240 DHPM				T2/H/R	132 **400**	132 **400**	
	32 256 DHA				T2/H/R	132 **400**	132 **400**	
C	C 210 ... C 340		01/75 → 05/87		U	132 **502**	132 **502**	
			06/87 →		***Kit 1** (N6 / N9)	132 **502**	132 **502**	
	CS, MS (Mack)		01/86 →		U	132 **502**	132 **502**	
G	G (Maxter, Manager)		01/93 →		***Kit 3** (N13) T8	132 **603**	132 **603**	
	G 170 ... G 340		01/83 → 12/92		***Kit 1** (N6 / N9)	132 **502**	132 **502**	
	GB 131, GB 191, GB 231		06/80 → 12/84		***Kit 1** (N6 / N9)	132 **502**	132 **502**	
	GBH, GLM, GLR 280		74 → 05/80		T2/H/R	132 **400**	132 **400**	
	GC 231		80 → 12/85		***Kit 1** (N6 / N9)	132 **502**	132 **502**	
	GR 191, GR 231, GR 305		06/80 → 12/84		***Kit 1** (N6 / N9)	132 **502**	132 **502**	
	GRH 235, GRH 305, GRH 350		06/80 → 12/84		***Kit 1** (N6 / N9)	132 **502**	132 **502**	
H	HB, HF		10/77 →		***Kit 1** (N6 / N9)	132 **502**	132 **502**	
	HM 15, HM 17, HM 19, HM 26		10/77 →		***Kit 1** (N6 / N9)	132 **502**	132 **502**	
	HN 19, HN 26, HN 38		10/77 →		***Kit 1** (N6 / N9)	132 **502**	132 **502**	
J	J, JN, JK, JP, JR, JK		01/75 → 05/87		U	132 **502**	132 **502**	
	J		06/87 →		T8	132 **603**	132 **603**	
KANGOO	Kangoo / Kangoo express		07/01 → 12/07		U	132 **502**	132 **502**	
	Kangoo 2		01/08 →			119 **392**		
KERAX			01/97 → 12/05		M10	132 **651**		
			01/97 → 12/05		M10	132 **651**		
			01/06 →		M10	132 **651**		
			01/06 →		U	133 **651**	133 **651**	
M	M 140 ... M 230 (Midliner)		01/87 →		***Kit 3** (N13) T8	132 **603**	132 **603**	
MAGNUM / AE	Magnum AE 380 … 520		10/90 → 02/97		***Kit 3** (N4)	132 **704**	132 **704**	

*Kit 1 = 581155 - *Kit 2 = 581156 - *Kit 3 = 581157
(Sold separately - Vendu séparément)

For/Pour								
RENAULT TRUCKS (R.V.I.) (...)								
MAGNUM / AE	Magnum AE 380 … 520		03/97 → 2013		T7	132 **704**	132 **704**	
			03/97 → 2013		T7	133 **702**	133 **702**	
MASCOTT			06/99 → 10/99		M10	132 **602**		
			06/99 → 10/99		M10	132 **601**		
			11/99 → 03/10		M10	132 **602**		
			11/99 → 03/10		M10	132 **601**		
			11/99 → 03/10		U	133 **601**	133 **601**	
MASTER	Gamme B 70, B 90		01/83 → 12/92		***Kit 3** (N4)	132 **704**	132 **704**	
	Gamme B (Messenger)		01/93 → 10/97		***Kit 3** (N8)	132 **603**	132 **603**	
	Master		09/80 → 02/89		***Kit 3** (N4)	132 **603**	132 **603**	
			03/89 → 10/97		***Kit 3** (N8)	132 **603**	132 **603**	
			11/97 → 10/99		M10	132 **602**		
			11/97 → 10/99		M10	132 **601**		
			11/99 → 03/10		M10	132 **602**		
			11/99 → 03/10		M10	132 **601**		
			11/99 → 03/10		U	133 **601**	133 **601**	
			04/10 →		T11	132 **652**	132 **652**	
			04/10 →		U	133 **650**	133 **650**	
MAXITY			08 →		U	132 **502**	132 **502**	
Gamme D (MAXITY)	3,5 7,5T		13 →		U	132 **502**	132 **502**	
MIDLUM			03/00 → 12/00		M10	132 **601**		
			03/00 → 12/00		M10	132 **602**		
			01/01 →		M10	132 **601**		
			01/01 →		M10	132 **602**		
			01/01 →		U	133 **601**	133 **601**	
Gamme D (MIDLUM)	10 18T		06/13 →		M10	132 **601**		
			06/13 →		M10	132 **602**		
PREMIUM	1		05/96 → 12/05		M10	132 **651**		
	2		01/06 →		M10	132 **651**		
			01/06 →		U	133 **651**	133 **651**	
Gamme D Wide (PREMIUM)	18 26T		06/13 →		M10	132 **651**		
			06/13 →		M10	132 **651**		
Gamme C (PREMIUM)	250 320 CH		06/13 →		M10	132 **651**		
			06/13 →		M10	132 **651**		
Gamme C (new)	380 520 CH		06/13 →		T14	132 **653**	132 **653**	
Gamme K (new)	380 520 CH		06/13 →		T14	132 **653**	132 **653**	
Gamme T (new)	380 520 CH		06/13 →		T14	132 **653**	132 **653**	
Gamme T High Sleeper (new)	440 520 CH		10/13 →		T14	132 **653**	132 **653**	
R	R (Major)		01/81 →		U	132 **502**	132 **502**	
S	S 90 ... S 220		01/75 → 05/87		U	132 **502**	132 **502**	
	S 90 ... S 220 (Midliner)		06/87 →		***Kit 3** (N13) T8	132 **603**	132 **603**	
	SM 5, SM 6, SM 7, SM 8		10/79 → 06/84		T2	132 **400**	132 **400**	
	SM 10, SM 12, SM 13		06/75 →		U	132 **502**	132 **502**	
	SM 170 ... SM 340		→ 01/79		U	132 **502**	132 **502**	
SB 2			10/79 → 06/84		T2	132 **400**	132 **400**	
SG 1, SG 2, SG 3, SG 4, SG 5 (MASTER)			10/79 → 06/84		T2	132 **400**	132 **400**	
T	CBH-Serie 280		04/86 → 05/87		U	132 **502**	132 **502**	
	TB 191, TB 231		06/80 → 12/84		***Kit 1** (N6 / N9)	132 **502**	132 **502**	
	TP 2, TP 3		→ 01/80		T2	132 **400**	132 **400**	
	TR 260, TR 280, TR 300, TR 305, TR 320		04/75 →		***Kit 1** (N6 / N9)	132 **502**	132 **502**	
	TRH 305, TR 320, TR 350		04/75 →		***Kit 1** (N6 / N9)	132 **502**	132 **502**	
TRAFIC			04/89 → 03/01		U	132 **502**	132 **502**	
			04/01 →		M10	116 **340**		
SAURER								
D 290 F, N, D 330 B			→ 01/77		***Kit 3** (N4)	132 **603**	132 **603**	
SCAMMEL								
CONSTRUCTOR 8			→ 01/80		***Kit 3** (N4)	132 **603**	132 **603**	
SCANIA								
Citywide LE					16X6m	132 **001**	132 **001**	
Citywide LF					N12/N11/N14	132 **801**	132 **801**	
Touring					16X6m	132 **001**	132 **001**	

*Kit 1 = 581155 - *Kit 2 = 581156 - *Kit 3 = 581157
(Sold separately -Vendu séparément)

For/Pour			2					
SCANIA (...)								
Touring HD					16X6m	132 **001**	132 **001**	
80	Série 81 (LB)		01/75 → 01/81		U	132 **502**	132 **502**	
	Série 85 (BR, CR, Super)		01/73 → 01/81		***Kit 3** (N4)	132 **704**	132 **704**	
	Série 85 L, LB, LS, LBS, LBT, Super		01/69 → 01/75		U	132 **502**	132 **502**	
	Série 86 L, LB, LS, LBS		01/75 → 01/81		U	132 **502**	132 **502**	
110	Série 111 L, LB, LS, LT, LBS, LBT, Super		01/75 → 01/81		U	132 **502**	132 **502**	
	Série 116 (BR)		01/79 →		***Kit 3** (N4)	132 **704**	132 **704**	
	Omnicity		09/96 →		N12/N11/N14	132 **801**	132 **801**	
	Omniline IL94 IB		11/00 →		16X6m	132 **901**	132 **901**	
	Omnilink		98 → 01		N12/N11/N14	132 **801**	132 **801**	
	Serie 112 - A (CN)		84 →		***Kit 3** (N4)	132 **704**	132 **704**	
	Serie 116 (CN)		84 →		***Kit 3** (N4)	132 **704**	132 **704**	
140	Série 140 L, LB, LS, LT, LBS, LBT, Super		01/77 → 01/81		U	132 **502**	132 **502**	
	Série 145 (BR)		01/71 → 01/81		***Kit 3** (N4)	132 **704**	132 **704**	
	Série 145 (CR)		08/71 → 01/81		***Kit 3** (N4)	132 **704**	132 **704**	
	Série 146 KT, LB, LT		01/76 → 01/81		U	132 **502**	132 **502**	
2-SERIES	82 (G, P, T)		08/79 → 03/88		***Kit 3** (N8)	132 **603**	132 **603**	
	92 M, 92 L, 92 LB, 92 LBS)		01/81 → 01/88		***Kit 3** (N8)	132 **603**	132 **603**	
	112 (CR)		01/78 →		***Kit 3** (N4)	132 **704**	132 **704**	
	112 M, H (P, R, T)		08/79 → 03/88		***Kit 3** (N8)	132 **603**	132 **603**	
	142 L, LB, LS, LT, LBS, LBT, Super		01/75 → 01/81		U	132 **502**	132 **502**	
	142 M (R,T)		08/79 → 03/88		***Kit 3** (N8)	132 **603**	132 **603**	
3-SERIES	93 M, 93 H		04/88 →		***Kit 3** (N8)	132 **603**	132 **603**	
	113 M, H, R		04/88 →		***Kit 3** (N8)	132 **603**	132 **603**	
	143 M, H		04/88 →		***Kit 3** (N8)	132 **603**	132 **603**	
4-SERIES	94 C, D, G, L		10/95 →		T7	132 **704**	132 **704**	
	114 C, G, L		10/95 →		T7	132 **704**	132 **704**	
	124 C, G, L		10/95 →		T7	132 **704**	132 **704**	
	144 C, G, L		10/95 →		T7	132 **704**	132 **704**	
	164 C, G, L		05/00 →		T7	132 **704**	132 **704**	
G	Série G		08 →		T7	132 **704**	132 **704**	
		Clips	08 →		T7	132 **705**	132 **705**	
			08 →		T7	133 **703**	133 **703**	
P	P Serie 230…420 (P, R, T)		04 → 08/05		T7	132 **704**	132 **704**	
			09/05 →		T7	132 **704**	132 **704**	
		Clips	09/05 →		T7	132 **705**	132 **705**	
			09/05 →		T7	133 **703**	133 **703**	
R	R Serie 380…580 (P, R, T)		04 → 08/05		T7	132 **704**	132 **704**	
	R Serie 230…620 (P, R, T)		09/05 → 11/16		T7	132 **704**	132 **704**	
		Clips	09/05 → 11/16		T7	132 **705**	132 **705**	
			09/05 → 11/16		T7	133 **703**	133 **703**	
T	T Serie 380…580 (P, R, T)		04 → 08/05		T7	132 **704**	132 **704**	
	T Serie 230… (P, R, T)		09/05 →		T7	132 **704**	132 **704**	
		Clips	09/05 →		T7	132 **705**	132 **705**	
			09/05 →		T7	133 **703**	133 **703**	
SEDDON-ATKINSON								
200, 300, 400 SERIES			→ 01/75		U	116 **166**	116 **166**	
SEKURA								
CABINE					***Kit 3** (N4)	132 **704**	132 **704**	
SMIT								
MERCURIUS			94 →		N12/N11/N14	132 **801**	132 **801**	
METEOR			94 →		22/25/27	132 **000**	132 **000**	
SOLARIS								
URBINO	II				22/25/27		132 **000**	
	III				N12/N11/N14	132 **801**	132 **801**	
	12				22/25/27	132 **000**		
	12 LE				22/25/27	132 **000**	132 **000**	
	Electric				22/25/27	132 **000**		
VACANZA					22/25/27	132 **000**	132 **000**	
STEYR								
790			04/76 → 01/79		U	132 **502**	132 **502**	

***Kit 1 = 581155 - *Kit 2 = 581156 - *Kit 3 = 581157**
(Sold separately - Vendu séparément)

For/Pour								
STEYR (...)								
1290 > 1490 K.O.S			06/72 → 02/79		U	132 **502**	132 **502**	
1291 > 1491 260, 280, 310, 320			04/78 → 12/87		U	132 **502**	132 **502**	
13 S14, 17 S14, 18, 21, 23			04/86 →		U	132 **502**	132 **502**	
18 S36, 19 S36, 19 S42, 33 S42			01/94 →		U	132 **502**	132 **502**	
1890 F.O			04/75 → 04/81		U	132 **502**	132 **502**	
1891 280, 310, 320, 330			02/82 → 12/87		U	132 **502**	132 **502**	
19 S24, 40 S37			01/87 →		U	132 **502**	132 **502**	
28 S36					U	132 **502**	132 **502**	
2891 260, 280, 330			10/83 → 12/87		U	132 **502**	132 **502**	
320, 360, 390			01/87 →		U	132 **502**	132 **502**	
35 S36					U	132 **502**	132 **502**	
590.170, 690.170			08/69 → 03/92		T2	132 **451**	132 **451**	
591, 691			01/84 → 04/86		U	132 **502**	132 **502**	
591.136 , 691.136			→ 01/84		T2	132 **451**	132 **451**	
791.145, 170, 195, 210			11/78 → 02/86		U	132 **502**	132 **502**	
8 S14, 8 S18			04/89 →		U	132 **502**	132 **502**	
891.170			11/78 → 02/86		U	132 **502**	132 **502**	
9 S14, 18, 21 À 12 S14, 18, 21			04/86 →		U	132 **502**	132 **502**	
CITYBUS SC 6 F 55/65			01/75 →		***Kit 3** (N4)	132 **704**	132 **704**	
PINZGAUER VEB 4X4					T2	132 **451**	132 **451**	
SG 18 HUA 250					***Kit 3** (N4)	132 **704**	132 **704**	
SL 11 HU 200, SL 11 HUA 250					***Kit 3** (N4)	132 **704**	132 **704**	
SS 11 HU 200, SS 11 HUA 250					***Kit 3** (N4)	132 **704**	132 **704**	
STADTBUS CS 6 F 55			10/73 →		***Kit 3** (N4)	132 **704**	132 **704**	
TRANSITBUSSE (ST.U.Ü)					***Kit 3** (N4)	132 **704**	132 **704**	
SUNSUNDEGUI								
CITY STYLO			93 →		22/25/27	132 **000**	132 **000**	
INTER STYLO	I / II		93 →		22/25/27	132 **000**	132 **000**	
SIDERAL			97 →		22/25/27	132 **000**	132 **000**	
T.A.M								
122	A 75T		01/92 →		***Kit 3** (N4)	132 **704**	132 **704**	
	T 8B		01/92 →		***Kit 3** (N8)	132 **603**	132 **603**	
232	A 90				22/25/27	132 **000**	132 **000**	
	A 90T		01/92 →		22/25/27	132 **000**	132 **000**	
260	A 116P		01/92 →		N12/N11/N14	132 **801**	132 **801**	
	A 119T				22/25/27	132 **000**	132 **000**	
	T 17BL		01/92 →		***Kit 3** (N8)	132 **603**	132 **603**	
331	A 119VT		01/92 →		22/25/27	132 **000**	132 **000**	
TATA HISPANO								
ADL Hybrid					22/25/27	132 **000**	132 **000**	
Inter Premium					22/25/27	132 **000**	132 **000**	
Naya					22/25/27	132 **000**	132 **000**	
TML Hybrid					22/25/27	132 **000**	132 **000**	
Xerus					22/25/27	132 **000**	132 **000**	
TATRA								
613			01/76 →		T2/H/R	132 **400**	132 **400**	
PHOENIX	PHOENIX (Euro 6)		14 →		T11	132 **603**	132 **603**	
			14 →		U	133 **600**	133 **600**	
TEMSA								
Avenue LF					22/25/27	132 **000**	132 **000**	
HD13					22/25/27	132 **000**	132 **000**	
LD13 SB (LD SB)					22/25/27	132 **000**	132 **000**	
LF12					22/25/27	132 **000**	132 **000**	
MARATON					22/25/27	132 **000**	132 **000**	
SAFARI 12 IC / 13 IC / 14 / HP					22/25/27	132 **000**	132 **000**	
Tourmalin IC					16X6m	132 **901**	132 **901**	
TERBERG								
FM	1350				T7	132 **652**	132 **652**	
					T7	133 **652**	133 **652**	
	1450				T7	132 **652**	132 **652**	

*Kit 1 = 581155 - *Kit 2 = 581156 - *Kit 3 = 581157
(Sold separately -Vendu séparément)

For/Pour								
TERBERG (...)								
FM	1450				T7	133 **652**	133 **652**	
	1850				T7	132 **652**	132 **652**	
					T7	133 **652**	133 **652**	
	1950				T7	132 **652**	132 **652**	
					T7	133 **652**	133 **652**	
	2000				T7	132 **652**	132 **652**	
					T7	133 **652**	133 **652**	
	2850				T7	132 **652**	132 **652**	
					T7	133 **652**	133 **652**	
	3000				T7	132 **652**	132 **652**	
					T7	133 **652**	133 **652**	
YT 182	(4X2)		08 →		N12/N11/N14	132 **801**		
TITAN								
TF 3000	(10X8)				***Kit 3** (N8)	132 **603**	132 **603**	
TTR 340	(8X8)				***Kit 1** (N6 / N9)	132 **502**	132 **502**	
TOYOTA								
DYNA			01/79 → 01/83		T2/H/R	132 **400**	132 **400**	
HI-ACE	I		01/79 → 01/83		T2/H/R	132 **400**	132 **400**	
	II / III		08/85 → 10/95		T2/H/R	132 **400**	132 **400**	
HI-LUX			01/79 → 01/83		T2/H/R	132 **400**	132 **400**	
LITE-ACE	I		01/79 → 01/83		T2/H/R	132 **400**	132 **400**	
UNVI								
SIL INTERCITY		▼			16X6m	132 **001**	132 **001**	
		▲			N12/N11/N14	132 **801**	132 **801**	
URBIS					16X6m	132 **001**	132 **001**	
VOYAGER GT					16X6m	132 **001**	132 **001**	
UGARTE								
CX-ELITE			94 →		22/25/27	132 **000**	132 **000**	
CX-ELITE GLASS			95 →		22/25/27	132 **000**	132 **000**	
V D L								
AMBASSADOR					22/25/27	132 **000**	132 **000**	
ARROW	30				16X6m	132 **001**	132 **001**	
	70				16X6m	132 **001**	132 **001**	
AXIAL	50				22/25/27	132 **000**	132 **000**	
	70	▼			22/25/27	132 **000**	132 **000**	
		▲			***Kit 3** (N4)	132 **652**	132 **652**	
	100	▼			N12/N11/N14	132 **801**	132 **801**	
		▲			***Kit 3** (N4)	132 **652**	132 **652**	
	DD138-430XE				N12/N11/N14	132 **801**	132 **801**	
DIPLOMAT	255				22/25/27	132 **000**	132 **000**	
E 91					22/25/27	132 **000**	132 **000**	
FUTURA					22/25/27	132 **000**	132 **000**	
	DD	▼			N12/N11/N14	132 **801**	132 **801**	
		▲			***Kit 3** (N4)	132 **603**	132 **603**	
KUSTERS	Mid Euro XL		05/95 → 05/06		T8 T16	132 **603**	132 **551**	
MINI BUS			→ 05/06		T8 T16	132 **603**	132 **551**	
MISTRAL	70	▼			16X6m	132 **001**	132 **001**	
		▲			***Kit 3** (N4)	132 **652**	132 **652**	
PHILEAS					N15 N12/N11/N14	132 **900**	132 **801**	
PROCITY					U	116 **166**	116 **166**	
SYNERGY		▼			N12/N11/N14	132 **801**	132 **801**	
		▲			***Kit 3** (N4)	132 **652**	132 **652**	
TRANSIT	Transit 2000				22/25/27	132 **000**	132 **000**	
	Transit 2000 Midi				22/25/27	132 **000**	132 **000**	
VAN HOOL								
A 300, A 300 CNG/ LPG			91 →		N15	132 **900**	132 **900**	
A 308, A 308 CNG/HYB/LPG/L			88 →		N15	132 **900**	132 **900**	
A 309			04 →		N15	132 **900**	132 **900**	
A 320			99 →		N15	132 **900**	132 **900**	
A 330			97 →		N15	132 **900**	132 **900**	

*Kit 1 = 581155 - *Kit 2 = 581156 - *Kit 3 = 581157
(Sold separately - Vendu séparément)

For/Pour			2	3				
VAN HOOL (...)								
A 360			97 →		N15	132 **900**	132 **900**	
A 500			85 →		N15	132 **900**	132 **900**	
A 508			09/88 →		N15	132 **900**	132 **900**	
A 600					N15	132 **900**	132 **900**	
ACRON					N15	132 **900**	132 **900**	
AG 300	AG 300, AG 300 CNG/LPG/T		01/92 →		N15	132 **900**	132 **900**	
AG 500			85 →		N15	132 **900**	132 **900**	
AG 700					N15	132 **900**	132 **900**	
AGG 300					N15	132 **900**	132 **900**	
ALIZEE	T 815 H		82 →		22/25/27	132 **000**	132 **000**	
ASTRON					N15	132 **900**	132 **900**	
EOS	80		01/93 →		N15	132 **900**	132 **900**	
	90		01/93 →		N15	132 **900**	132 **900**	
	100	▼	01/90 →		N12/N11/N14	132 **801**	132 **801**	
		▲	01/90 →		N12/N11/N14	132 **801**	132 **801**	
	200	▼	91 → 09/99		N12/N11/N14	132 **801**	132 **801**	
		▲	91 → 09/99		***Kit 3** (N4)	132 **603**	132 **603**	
	230	▼	01/94 →		N12/N11/N14	132 **801**	132 **801**	
		▲	01/94 →		***Kit 3** (N4)	132 **603**	132 **603**	
	233	▼	01/94 → 09/99		N12/N11/N14	132 **801**	132 **801**	
		▲	01/94 → 09/99		***Kit 3** (N4)	132 **603**	132 **603**	
EX	15 H	▼			22/25/27	132 **000**	132 **000**	
	16 H	▼			22/25/27	132 **000**	132 **000**	
	16 M	▼			22/25/27	132 **000**	132 **000**	
	17 H	▼			22/25/27	132 **000**	132 **000**	
EXQUI CITY					22/25/27	132 **000**	132 **000**	
T800	T 812 HGT		09/88 →		22/25/27	132 **000**	132 **000**	
	T 815 Acron (Royal / New Look)	▲	09/88 →		***Kit 1** (N6 / N9)	132 **502**	132 **502**	
	T 815 Alicron (Royal / New Look)	▲	01/91 →		***Kit 1** (N6 / N9)	132 **502**	132 **502**	
	T 815 HGT, SL, Transligne		09/88 →		22/25/27	132 **000**	132 **000**	
	T 815 TL/CL				22/25/27	132 **000**	132 **000**	
	T 816 Altano (Royal / New Look)	▼	01/92 →		N15	132 **900**	132 **900**	
	T 818 Altano (Royal / New Look)	▼	01/92 →		N15	132 **900**	132 **900**	
	TD 824 Astromega	▼			N15	132 **900**	132 **900**	
		▲			N15	132 **900**	132 **900**	
	TD 827 Astromega	▼			N15	132 **900**	132 **900**	
		▲			N15	132 **900**	132 **900**	
T900	T 9 Acron	▼	95 →		22/25/27	132 **000**	132 **000**	
		▲	95 →		***Kit 1** (N6 / N9)	132 **502**	132 **502**	
	T 911 Alicron				22/25/27	132 **000**	132 **000**	
	T 915 Acron	▼	95 →		22/25/27	132 **000**	132 **000**	
	T 915 Alicron	▼	96 →		22/25/27	132 **000**	132 **000**	
	T 915 CL		09/00 →		22/25/27	132 **000**	132 **000**	
	T 916 Astron	▼			22/25/27	132 **000**	132 **000**	
		▲			***Kit 1** (N6 / N9)	132 **502**	132 **502**	
	T 916 Astronef	▼			22/25/27	132 **000**	132 **000**	
		▲			T7	132 **560**	132 **560**	
	T 916 CL		04 →		22/25/27	132 **000**	132 **000**	
	T 916 / 917 Altano	▼	99 →		N12/N11/N14	132 **801**	132 **801**	
		▲	99 →		N12/N11/N14	132 **801**	132 **801**	
	T 917 Acron	▼	99 →		22/25/27	132 **000**	132 **000**	
	T 917 Astron	▼			22/25/27	132 **000**	132 **000**	
		▲			***Kit 1** (N6 / N9)	132 **502**	132 **502**	
	T 918 Altano	▼			N12/N11/N14	132 **801**	132 **801**	
		▲			N12/N11/N14	132 **801**	132 **801**	
	TD 927 Astromega	▼	97 →		N12/N11/N14	132 **801**	132 **801**	
		▲	97 →		N12/N11/N14	132 **801**	132 **801**	
TX	11 Alicron				22/25/27	132 **000**	132 **000**	
	16 Acron	▼			22/25/27	132 **000**	132 **000**	
		▲			T7	132 **560**	132 **560**	
	16 Astron	▼			22/25/27	132 **000**	132 **000**	
		▲			T7	132 **560**	132 **560**	
	16 Astronef	▼			22/25/27	132 **000**	132 **000**	

*Kit 1 = 581155 - *Kit 2 = 581156 - *Kit 3 = 581157
(Sold separately -Vendu séparément)

For/Pour								
VAN HOOL (...)								
TX	16 Astronef	▲			T7	132 **560**	132 **560**	
	17 Acron	▼			22/25/27	132 **000**	132 **000**	
		▲			T7	132 **560**	132 **560**	
	17 Altano	▼			N12/N11/N14	132 **801**	132 **801**	
	17 Astronef	▼			22/25/27	132 **000**	132 **000**	
		▲			T7	132 **560**	132 **560**	
	21 / TDX 21 Altano	▼			N12/N11/N14	132 **801**	132 **801**	
		▲			***Kit 3** (N4)	132 **704**	132 **704**	
	27 Astromega	▼			N12/N11/N14	132 **801**	132 **801**	
		▲			***Kit 3** (N4)	132 **704**	132 **704**	
VIBERTI								
FIAT 418 AL/MS			01/79 →		***Kit 3** (N4)	132 **603**	132 **603**	
WESTERN STAR								
5700	5700 / 5700XE				U	132 **502**	132 **502**	
VOLKSWAGEN								
BULLY			→ 12/83		U	132 **502**	132 **502**	
CADDY / CADDY LIFE			04/04 → 02/07		T2	119 **355**		132 **400**
			03/07 →		T2	119 **305**		132 **400**
			04/04 → 02/07			119 **355**		119 **502**
			03/07 →			119 **305**		119 **502**
CADDY MAXI / MAXI LIFE			03/07 →		T2	119 **305**		132 **400**
			03/07 →			119 **305**		119 **502**
CARAVELLE, CALIFORNIA			09/90 →		T16/ T2	132 **551**	132 **551**	132 **400**
CITY-BUS			01/92 →		T8	132 **603**	132 **603**	
CRAFTER			06/06 →			119 **407**		119 **508**
			06/06 →			119 **409**		119 **508**
DANBURY			01/80 →		T2	132 **451**	132 **451**	
LT	LT 28 ... LT 50		04/75 → 11/82		U	132 **502**	132 **502**	
			12/82 → 08/96		U	132 **502**	132 **502**	
	LT		09/96 → 06/06		T8 U	132 **603**	132 **502**	
SYNCHRO 410D			01/92 →		T2	132 **451**	132 **451**	132 **400**
TARO			01/91 →		T2	132 **451**	132 **451**	
TRANSPORTER	T1-T2		→ 04/79		T2	132 **400**	132 **400**	
	T3		05/79 → 08/90		T2	132 **451**	132 **451**	132 **400**
	T4		09/90 → 12/03		T16/ T2	132 **551**	132 **551**	132 **400**
	T5		11/03 → 01/13		T8 T16	132 **603**	132 **551**	
			11/03 → 01/13		T8 T16	132 **603**	132 **551**	119 **503**
			11/03 → 01/13			119 **360**		119 **503**
			11/03 → 01/13			119 **361**		119 **503**
			11/03 → 01/13		T8 T16	132 **603**	132 **551**	119 **502**
			11/03 → 01/13			119 **360**		119 **502**
			11/03 → 01/13			119 **361**		119 **502**
MARCOPOLO	Volkbus 18.280 OT LE (Viale BRS)		17 →		N12/N11/N14	132 **801**	132 **801**	
VOLVO								
5000			98 →		22/25/27	132 **000**	132 **000**	
7000			09/99 →		22/25/27	132 **000**	132 **000**	
7250			05/99 →		22/25/27	132 **000**	132 **000**	
7450			98 →		22/25/27	132 **000**	132 **000**	
7700					22/25/27	132 **000**	132 **000**	
7900					N15	132 **900**	132 **900**	
7900 ELECTRIC			2015 →			132 **900**	132 **900**	
8700 LE					22/25/27	132 **000**	132 **000**	
8900					N15	132 **900**	132 **900**	
9500					16X6m	132 **001**	132 **001**	
9700		▼			16X6m	132 **001**	132 **001**	
9900		▼			16X6m	132 **001**	132 **001**	
B10	B 6		01/94 →		22/25/27	132 **000**	132 **000**	
	400		99 →		22/25/27	132 **000**	132 **000**	
	B 10 B - GX 57				22/25/27	132 **000**	132 **000**	
	B 10 B - LE				22/25/27	132 **000**	132 **000**	
	B 10 B - SBL 12, B10 B				22/25/27	132 **000**	132 **000**	

***Kit 1 = 581155 - *Kit 2 = 581156 - *Kit 3 = 581157**
(Sold separately - Vendu séparément)

For/Pour								
VOLVO (...)								
B10	B 10 L - SN 12				22/25/27	132 **000**	132 **000**	
	M				22/25/27	132 **000**	132 **000**	
B12	12				22/25/27	132 **000**	132 **000**	
	500 H				22/25/27	132 **000**	132 **000**	
	600		96 →		22/25/27	132 **000**	132 **000**	
	M	▼			16X6m	132 **001**	132 **001**	
		▲			***Kit 3** (N4)	132 **652**	132 **652**	
C10	M		08/84 →		22/25/27	132 **000**	132 **000**	
CH 230					***Kit 3** (N8)	132 **603**	132 **603**	
F	4		09/75 → 12/85		***Kit 3** (N8)	132 **603**	132 **603**	
	6		09/75 → 12/85		***Kit 3** (N8)	132 **603**	132 **603**	
	7		08/77 → 10/93		***Kit 3** (N8)	132 **603**	132 **603**	
	10		08/77 → 10/93		***Kit 3** (N8)	132 **603**	132 **603**	
	12		08/87 → 10/93		***Kit 3** (N8)	132 **603**	132 **603**	
	16		08/77 → 10/93		***Kit 3** (N8)	132 **603**	132 **603**	
FE	FE		12/06 →		M10	132 **651**		
			12/06 →		U	133 **651**	133 **651**	
FH	10		11/93 → 01/06		T7	132 **652**	132 **652**	
			11/93 → 01/06		T7	133 **652**	133 **652**	
	12		11/93 → 01/06		T7	132 **652**	132 **652**	
			11/93 → 01/06		T7	133 **652**	133 **652**	
	16		11/93 → 01/06		T7	132 **652**	132 **652**	
			11/93 → 01/06		T7	133 **652**	133 **652**	
			02/06 → 12		T7	132 **652**	132 **652**	
			02/06 → 12		T7	133 **652**	133 **652**	
	16 (Euro 6)	Clips	03/13 →		T7	132 **703**	132 **703**	
			03/13 →		T7	132 **705**	132 **705**	
FL	4		01/85 →		***Kit 3** (N4)	132 **603**	132 **603**	
	6		09/85 → 12/94		***Kit 3** (N4)	132 **603**	132 **603**	
			02/94 → 11/06		***Kit 3** (N13)T8	132 **603**	132 **603**	
	7		09/85 → 09/90		***Kit 3** (N4)	132 **704**	132 **704**	
			10/95 → 98		T7	132 **704**	132 **704**	
	10		09/85 → 09/95		***Kit 3** (N4)	132 **704**	132 **704**	
	12		10/95 → 97		T7	132 **704**	132 **704**	
	220 / 250		09/00 → 11/06		***Kit 3** (N13)T8	132 **603**	132 **603**	
	FL		12/06 →		M10	132 **601**		
			12/06 →		M10	132 **602**		
			12/06 →		U	133 **601**	133 **601**	
FM	7		06/98 → 12/01		T7	132 **652**	132 **652**	
			06/98 → 12/01		T7	133 **652**	133 **652**	
	9		12/01 → 03		T7	132 **652**	132 **652**	
			12/01 → 03		T7	133 **652**	133 **652**	
	10		06/98 → 12/01		T7	132 **652**	132 **652**	
			06/98 → 12/01		T7	133 **652**	133 **652**	
	12		06/98 → 01/06		T7	132 **652**	132 **652**	
			06/98 → 01/06		T7	133 **652**	133 **652**	
	FM / FMX		02/06 →		T7	132 **652**	132 **652**	
			02/06 →		T7	133 **652**	133 **652**	
FS	7		01/85 → 95		***Kit 3** (N13)T8	132 **603**	132 **603**	
	10		01/85 → 09/95		***Kit 3** (N4)	132 **704**	132 **704**	
G	G8		01/75 →		T2	132 **451**	132 **451**	
N	N 4		01/85 →		***Kit 3** (N4)	132 **603**	132 **603**	
	N 7		09/73 →		T2	132 **400**	132 **400**	
	N 8 / NB 8		→ 08/73		T2	132 **451**	132 **451**	
	10		09/73 →		T2	132 **400**	132 **400**	
	12		09/73 →		T2	132 **400**	132 **400**	
NH	12		09/00 →		T11	132 **652**	132 **652**	
NL	6		01/75 →		***Kit 3** (N8)	132 **603**	132 **603**	
	10		09/73 →		T2	132 **400**	132 **400**	
	12		09/73 →		T2	132 **400**	132 **400**	
WAGNER								
CADNA					22/25/27	132 **000**	132 **000**	
YUTONG								
E 12 / E12 LF	(Euro 6)		15 →		N12/N11/N14	132 **801**	132 **801**	

*Kit 1 = 581155 - *Kit 2 = 581156 - *Kit 3 = 581157
(Sold separately -Vendu séparément)

	N°		mm	mm
A	193 588		8	6 x 2
H	192 390		11	7,1 x 2,5
N6	183 700		11	13,6 / 16,2
N9	182 931		-	16,2
N15	191 292		-	25,2
R	191 088		11	8 x 2 / 8 x 3
T2	189 336		11	9 x 3
T7	580 804		13,5	12 x 4
T8	580 803		13,5	9 x 4
T16	580 805		11	9 x 4
U	180 808		11	8 x 3 / 9 x 3 / 9 x 4

	N°			mm		mm
Kit 1 - 581 155 (N6 + N9 + Screw / Washer / Nut - Vis / Rondelle / Ecrou - Sold separately - Vendu séparément)						
+ N6	183 700			11		13,6 / 16,2
N9	182 931			-		16,2
Kit 2 - 581 156 (N3 + Screw / Washer / Nut - Vis / Rondelle / Ecrou - Sold separately - Vendu séparément)						
N3				11		13,6 / 16,2
Kit 3 - 581 157 (N4 + N8 + N 13 + Screw / Washer / Nut - Vis / Rondelle / Ecrou - Sold separately - Vendu séparément)						
+ N4				13,5		16,2
+ N8				13,5		9 x 3
N13				-		-

10

IAM → SWF	
BOSCH	
3397001543 (N543)	**132603+132551**
3397001725 (N725)	**116153+116154**
3397002918 (N72)	**132704**
3397004080 (N74)	**132651**
3397004644 (AR644S)	**133700**
3397011238 (N71)	**132704**
3397011310 (N66)	**132651**
3397018140 (N40)	**132400**
3397018145 (N45)	**132451**
3397018150 (N53)	**132502**
3397018151 (51)	**132501**
3397018155 (55)	**132551**
3397018156 (56)	**132560**
3397018962 (N56)	**132560**
3397018966 (N63)	**132600**
3397018162 (62)	**132603**
3397018963 (N65)	**132650**
3397011310 (N66)	**132651**
3397018165 (65)	**132652**
3397018170 (N70)	**132701**
3397018171 (71)	**132702**
33970181763 (N73)	**132702**
3397018170 (N70)	**132704**
3397011238 (N71)	**132705**
3397018173 (N73)	**132702**
3397018180 (N80)	**132801**
3397018181 (N81)	**132801**
3397018190 (N90)	**132900**
3397018191 (N91)	**132901**
3397018198 (N101)	**132001**
3397018199 (N100)	**132000**
3397018913 (A650S)	**133650**
3397018962 (N56)	**132560**
3397018963 (N65)	**132652**
3397018964 (N53)	**132502**
3397018965 (N55)	**132551**
3397018966 (N63)	**132603**
3397018966 (N63)	**133600**
3397118309 (609)	**132601**
3397118309 (609)	**132602**

IAM → SWF	
CHAMPION	
K60	**132601/132602**
K65D	**116153+116154**
T41001	**132400**
T45001	**132451**
T51001	**132502**
T51S04	**132502**
T55H01	**132551/132560**
T60001	**132603**
T60H01	**132603**
T60S04	**132603**
T65H01	**132652**
T65S04	**132652**
T70H03	**132651**
T70S04	**132704**
T70H05	**132705**
T80S04	**132801**
T90S04	**132900/132901**
T100S04	**132000/132001**
DOGA	
P40	**132400**
P45	**132451**
P50.1	**132502**
P50.2	**132502**
P56	**132551**
P60	**132603**
P60.1	**132603**
P65.1	**132652**
P65.2	**132652**
P70	**132704**
P70.2	**132704/132702**
P80	**132801**
P90	**132900**
P100	**132000**
TRICO	
TX500	**132502**
TX550	**132551**
TX600	**132603**
TX601	**132603**
TX603	**132601/132602**
TX650	**132652**

IAM → SWF	
TRICO (...)	
TX700	**132704**
TX800	**132801**
TX900	**132900**
TX901	**132901**
TX1000	**132000**
TX1001	**132001**
VALEO	
TIR 400	**132400**
TIR 450	**132451**
TIR 500	**132502**
TIR 500	**132501**
TIR 550	**132551**
TIR 551	**132560**
TIR 600N / TIR 601N	**132603**
TIR 605	**132601**
TIR 606	**132602**
TIR 607	**116340**
TIR 650N	**132652**
TIR 655N	**132651**
TIR 703N	**132704**
TIR 700N	**132702**
TIR 800N	**132801**
TIR 900N	**132900**
TIR 901N	**132901**
TIR 1000N	**132000**
TIR 1001N	**132001**
TIR X550	**133550**
TIR X600	**133600**
TIR X605	**133601**
TIR X650	**133650**
TIR X655	**133651**
TIR X700	**133700**

IAM → SWF	

OES	SWF
AUDI	
2K1955425	119355
2K1955426	119355
AUWÄRTER	
150700114	132704
150701002	132502
150705006	132000
150705102	132001
150712010	132801
BMW	
61618403036	116166
CITROËN	
642345	119429
642349	119429
642361	119416
6426AX	116166
6426PW	119416
6426PX	119416
DAF	
386258	132560
504352	132502
648022	132603
1260954	132603
FIAT	
46513392	116166
46742824	116166
1340685080	119416
1340686080	119416
9790376580	116169
IVECO	
2606687	132603
42302246	132704
42314796	132801
42324389	132652
42336866	132000
47244074	132603
71051417	132000
KÄSSBOHRER	
7731000161	132801
7731123109	132704
7731141003	132001

OES	SWF
KÄSSBOHRER (...)	
7731405009	132551
MAN	
281955425	132502
81.26440-0033	132704
81.26440-0046	132603
81.26440-0049	132000
81.26440-0053	132603
81.26440-0057	132603
81.26440-0063	132704
81.26440-0065	132603
81.26440-0068	132704
81.26440-6016	132000
81.26440-6022	132603
81.26440-6027	132000
81.26440-6034	132603
81.26440-6035	132704
82.26440-0057	132603
82.26440-0063	132704
82.26440-6002	132603
83.26440-0001	132000
85.20000-9975	132603
81.26440-0033	132801
81.26440-6013	132502
81.26440-6059	132001
81.27421-6007	132603
N1011026834	132704
MERCEDES-BENZ	
8203145	132502
8207945	132502
8208245	132603
8209345	132603
8209745	132702
18200245	132603
18201045	132603
18201245	132702
18204845	132702
18206445	132502
18206945	132702
9578200045	132603
8200945	132001

OES	SWF
MERCEDES-BENZ (...)	
8202645	132501
8203645	132704
8203745	132704
8205045	132603
8205345	132400
8206045	132603
8207145	132801
8208145	132652
8209945	132000
8244926	132451
18203045	119398
18203145	119398
18203445	119407
18203545	119407
18203945	119407
3818240126	132704
A0018203045	119398
A0018203145	119398
A0018203445	119407
A0018203545	119407
A0018203945	119407
A0018206945	132702
A3397007215	119407
A3397007216	119409
A3397007225	119416
A3397007311	119398
A3397007414	119429
A3397008006	119504
A3397008009	119502
A3397008051	119508
A6388201045	116153
A6388201145	116154
A6388201245	116153
A6388201345	116154
MITSUBISHI	
MZ690102	116166
PEUGEOT	
642344	119429
642348	119429
6423A9	119429

OES	SWF
PEUGEOT (...)	
6426GL	116166
6426GP	116166
6426HA	116166
6426HC	116166
6426HV	116166
6426HZ	116153
6426KZ	116166
6426LA	116166
6426LE	116153
6426LJ	116166
6426PR	119416
6426PS	119416
RENAULT	
7701068753	119392
7701068755	119392
7711172771	116166
7711172782	116340
288909916R	119392
RENAULT TRUCKS	
5000244805	132400
5000550175	132603
5000788818	132000
5000830085	132704
5516038449	132502
7701068753	119392
7701068755	119392
SCANIA	
288204	132603
424405	132704
464499	132704
SKODA	
2K1955425	119355
2K1955426	119355
5L1955425	119305
5L1955426	119305
STEYR	
16100740012	132502
16197740020	132603

OES → SWF

VOLKSWAGEN	
161955425	**132400**
281955425	**132502**
431955425	**132451**
533955425	**132502**
1K0955429B	**119305**
1K0998002A	**119355**
1K1955425	**119355**
1K1955426	**119355**
1K2998002	**119355**
1K8955425B	**119305**
1K8955426B	**119305**
1K9955427	**119504**
1Q195542503C	**119305**
1Q1955425A	**119305**
1Q195542603C	**119305**
1Q1955426A	**119305**
1Q1998002	**119305**
1Z5955425	**119502**
2D0955427	**116166**
2E1955421A	**119407**
2E1955421B	**119407**
2E1998002	**119407**
2K1955425	**119355**
2K1955426	**119355**
3C1955425B	**119305**
3C1955425D	**119305**
3C1955426B	**119305**
3C1955426D	**119305**
3C1998002	**119305**
3C8955425B	**119305**
3C8955426B	**119305**
4A0955427	**116166**
5J7955425	**119504**
5K1945426	**119305**
5K1955425	**119305**
5K1955426	**119305**
6Q6955425A	**119504**
7E0955425	**119502**
7E0955425A	**119503**

OES → SWF

VOLVO	
1088425	**132603**
1195399	**132000**
1504792	**132400**
1606291	**132704**
5860106	**132603**
6772680	**132603**
82485683	**132703**

OES → SWF

OES → SWF

EUROPE

FRANCE

VALEO SERVICE FRANCE
70, RUE PLEYEL
93285 SAINT-DENIS CEDEX - FRANCE
TEL.: (+33) 1 49 45 32 32
FAX: (+33) 1 49 45 37 36
S.A.S. au capital de 12 900 000 €
RCS Bobigny B 306 486 408

SPAIN, PORTUGAL

VALEO SERVICE ESPAÑA, S.A.U.
CALLE RIO ALMANZORA, N°5
AREA EMPRESARIAL ANDALUCIA C.L.A.
28906 GETAFE (MADRID) - ESPAÑA
TEL.: (+34) 91 495 85 00
FAX: (+34) 91 495 86 99
TEL. ATENCIÓN TÉCNICA: 902 011 799
TEL. ATENCIÒN AL CLIENTE: 900 122 657
Valeo Service España Sociedad Anónima
inscrita en el Registro Mercantil de Madrid,
Tomo 972 - Libro 941 de la sección 8ª ,
Folio 25 - Hoja 65435 - Inscripción 1ª NIF. A28772978

ITALY, GREECE, ALBANIA, BOSNIA-HERZEGOVINA, CROATIA, CYPRUS, KOSOVO, SERBIA, SLOVENIA, MACEDONIA, MALTA,MONTENEGRO

VALEO SERVICE ITALIA S.P.A. - ADRIATIC
VIA ASTI, 89
10026 SANTENA - TORINO - ITALY
TEL.: +39 011 9495 1
FAX.: +39 011 9456 042
TEL. LINEA TECNICA: 800 805 046
N. iscrizione al Tribunale di Torino 2009/88 reg. soc.
C.C.I.A.A. 715107 - Capitale sociale € 2.600.000

LIAISON OFFICE IN GREECE
18, KALAMAKIOU AVENUE
17455 ALIMOS - GREECE
TEL.: +30 210 45 27 447/8
FAX.: +30 210 45 27 449

LIAISON OFFICE IN CROATIA
HEKTOROVICEVA ULICA 2
10000 ZAGREB - CROATIA
TEL.: +385 1 644 8288
FAX.: +385 1 644 1400

LIAISON OFFICE IN SERBIA
19TH AVENUE GTC
VLADIMIR POPOVICA 38-40 - 11070, NOVI
BEOGRAD - SERBIA
TEL: +381 (0)11 715 6976

POLAND, LITHUANIA, LATVIA, ESTONIA, MOLDAVIA, BELARUS, UKRAINE, CZECH REPUBLIC, SLOVAKIA, HUNGARY, ROMANIA, BULGARIA

VALEO SERVICE EASTERN EUROPE SP Z O.O.
WOŁOSKA 9A
02-583 WARSAW POLSKA
TEL.: (+48) 22 543 43 00
FAX: (+48) 22 543 43 05
Valeo Service Eastern Europe Sp. z o.o.; NIP 521-11-44-572
VAT UE PL5211144572 – REGON 011909673
Wysokość kapitału zakładowego: 4 637 000 PLN - KRS
56793 Sąd Rejonowy dla m. St. Warszawy w Warszawie,
XIII Wydział Gospodarczy KRS

UNITED KINGDOM

VALEO SERVICE UK LTD
HEMING ROAD - WASHFORD
REDDITCH - WORCS B98 0DZ - ENGLAND
TEL.: (+44) 1527 838 300
FAX: (+44) 1527 523 732
Registration Number: 956685

GERMANY, SWITZERLAND, AUSTRIA

VALEO SERVICE DEUTSCHLAND GMBH
BALCKE-DÜRR-ALLEE 1
40882 RATINGEN - DEUTSCHLAND
TEL.: (+49) 21 02 865 0
FAX: (+49) 21 02 865 142
TEL. HOTLINE: (+49) 800 869 2840
Handelsregister Düsseldorf - HRB 44140

LIAISON OFFICE IN AUSTRIA
MÜHLGASSE 7
2380 PERCHTOLDSDORF - AUSTRIA
TEL.: (+43) 1 480 42 46
FAX: (+43) 1 480 42 34

BENELUX, SWEDEN, FINLAND, NORWAY, DENMARK, ICELAND,

VALEO SERVICE BENELUX B.V.
HEIBLOEMWEG 1
5704 BS HELMOND - THE NETHERLANDS
TEL. BELGIUM: 0800 39803
TEL. NETHERLANDS: 0800 1233
TEL. LUXEMBOURG: 0800 25909
FAX BELGIUM: (+32) 2 366 04 47
FAX NETHERLANDS: (+31) 492 580 828
K.v.K. Eindhoven 33113859

LIAISON OFFICE IN SWEDEN
REGUS / VALEO
MASTER SAMUELSGATAN 60, 8TR
SE - 111 21 STOCKHOLM - SWEDEN
TEL.: (+46) 8 50 51 65 50

RUSSIA

VALEO SERVICE CO LTD
107140, MOSCOW
RUSAKOVSKAYA ST. 13,
3RD FLOOR, OFFICE 6
TEL.: (+7) 495 981-06-96
FAX: (+7) 495 787-59-92
HOTLINE:8 800 55 52 50

NORTH AMERICA

USA, CANADA

VALEO SERVICE USA
301 WEST PARK LANE, SUITE 301
HAMPTON, VA 23666
UNITED STATES OF AMERICA
TEL.: 1-888-178-2536

SOUTH AMERICA

SOUTH AMERICA (EXCEPT MEXICO)

VALEO CIBIÉ SERVICE LTDA
VALEO SERVICE BRAZIL
RUA SADAE TAKAGI, 2000
BAIRRO COOPERATIVA
09852-070 - SÃO BERNARDO DO CAMPO
SÃO PAOLO - BRASIL
TEL.: (+55) 11 43 93 33 54
FAX: (+55) 11 43 93 33 55
C.N.P.J.: 57.010.662/0008-36
Inscriçao Estadual : 635.331.124.114

VALEO SERVICE ARGENTINA
RUA SADAE TAKAGI, 2000
BAIRRO COOPERATIVA
09852-070 - SÃO BERNARDO DO CAMPO
SÃO PAOLO - BRASIL+
TEL.: (+55) 11 43 93 33 54
FAX: (+55) 11 43 93 33 55
C.N.P.J.: 57.010.662/0008-36
Inscriçao Estadual : 635.331.124.114

MEXICO

VALEO SERVICE MEXICO
MONTECITO 38, PISO 32 OFICINA 1/2
TORRE WORLD TRADE CENTER
COLONIA NÁPOLES | 03810 | MÉXICO, D.F.
TEL.: 52 (+55) 90001588

ASIA, MIDDLE EAST

VALEO SERVICE INDIA AUTO PARTS PVT.LTD.
(A JOINT VENTURE OF VALEO FRANCE & ANAND AUTOMOTIVE)
BLOCK-A, TECCI PARK,
173, RAJIV GANDHI SALAI (OMR)
SHOLINGANALLUR CHENNAI - 600 119
TEL: (+91) 44 66235000
FAX: (+91) 44 66235011
Corporate Identity No.U50100TN2012PTC084043

CHINA, TAIWAN

VALEO AUTO PART TRADING (SHANGHAI)
CO., LTD
201, BUILDING B, IBC TOWER (NEW
INTERNATIONAL BUSINESS CENTER)
391 GUI PING ROAD, SHANGHAI 200233,
CHINA
TEL: (+86) 21 5175 2618
MP: (+86) 21 5175 2628
法雷奥汽车零部件贸易（上海）有限公司
地址： 上海市徐汇区桂平路391号新漕河泾
国际商务中心B座201
电话： (+86) 21 5175 2618
传真： (+86) 21 5175 2628

VSAS (ASEAN)

VALEO AUTOMOTIVE CO.,LTD.
700/424 MOO 7
BANGNA-TRAD ROAD KM.57.
T.DON HUA LOR,A.MUANGCHONBURI
CHONBURI 20000, THAILAND
TEL: +66 (0) 38 265 600
FAX: +66 (0) 38 265 671
Registration number: 0105539010549

VALEO JAPAN CO., LTD
1-12-15 SUIDO, BUNKYO-KU,
7TH FLOOR, MIKASA BLDG. SHIRATORI BASHI,
112-0005 TOKYO, JAPAN"
TEL: +81-3-5465-5841
FAX: +81-3-5465-5849

TURKEY, IRAN, IRAQ, SYRIA, LEBANON, JORDAN, SAUDI ARABIA, UNITED ARAB EMIRATES, KUWAIT, BAHRAIN, QATAR, OMAN, YEMEN, EGYPT, AZERBAIJAN, GEORGIA, ARMENIA, KAZAKHSTAN

VALEO OTOMOTIV SISTEMLERI ENDÜSTRISI A.Ş.
AYDINEVLER SANAYI CADDESI
CENTRUM IS MERKEZI N°302
34854 MALTEPE
ISTANBUL - TURKEY
TEL.: (+90) 216 587 70 00
FAX: (+90) 216 519 93 14

VALEO SERVICE MIDDLE EAST
BP-04 TO BP-06
JEBEL ALI FREE ZONE (SOUTH-1)
P.O. BOX 17933 DUBAI"

AUSTRALIA, NEW-ZEALAND, AFRICA, DOM-TOM/ FRENCH OVERSEAS

VALEO SERVICE AFRICA & OVERSEAS
70, RUE PLEYEL
93285 SAINT-DENIS CEDEX - FRANCE
TEL.: (+33) 1 49 45 32 32
FAX: (+33) 1 49 45 36 59
S.A.S. au capital de 12 900 000 €
RCS Bobigny B 306 486 408

LIAISON OFFICE IN TUNISIA

CENTRE D'AFFAIRES REGUS
IMMEUBLE CARTHAGE RUE DU LAC DE
CONSTANCE 1053 TUNIS - TUNISIA
TEL.: (216) 71 965 002
FAX: (216) 71 965 137
MOB: (216)98 34 91 38

2017-2018

Connect

verbindet Experten**

WIPER BLADES
WISCHBLÄTTER
RUITENWISSERS
BALAIS D'ESSUIE-GLACE
TORKARBLAD
ESCOBILLAS LIMPIAPARABRISAS
ESCOVAS LIMPA VIDROS
SPAZZOLE TERGICRISTALLO
СТЕКЛООЧИСТИТЕЛИ
WYCIERACZKI
ΥΑΛΟΚΑΘΑΡΙΣΤΗΡΕΣ
SILECEK SÜPÜRGELERI
PYYHKIJÄNSULAT

© 2017 - Valeo Service SAS - Capital 12 900 000 € - RCS Bobigny n° 306 486 408 - Non contractual pictures - Photos: Christian Schryve - 3D: 1001 images - Conception & Réalisation : www.pension-complete.com • Ref: 953286

3 276429 532867

The German wiper specialist for the aftermarket

SWF

**Connecting Experts

SWF Connect range overview
SWF Connect Sortimentsübersicht

Long code / Short code
Artikelnummer / Kurznummer

	Long code *Artikelnummer*	Short code *Kurznummer*	Length (cm) *Länge (cm)*	Adaptors (A, B, C) *Adapter (A, B, C)*
Connect Front	262200	SC35	350	A, C
	262201	SC38	380	A, B
	262202	SC40	400	A, B, C
	262203	SC43	430	A, B
	262204	SC45	450	A, B, C
	262205	SC48	475	A, B
	262206	SC50	500	A, B, C
	262207	SC53	530	A, B
	262208	SC55	550	A, B, C
	262209	SC55B	550	A
	262210	SC58	580	A, B
	262211	SC60	600	A, B, C
	262212	SC60B	600	A
	262213	SC65	650	A, B, C
	262214	SC65B	650	A, B, C
	262215	SC70	700	A, B
	262216	SC70B	700	A, B
	262217	SC75	750	A, C
	262218	SC75B	750	A, B, C
	262219	SC80	800	A, B, C
Connect Rear	262230	SB24	240	R, T
	262231	SB28	280	R, S, T
	262232	SB33	335	R, S, T
	262233	SB38	380	R, T
	262234	SB40	400	R, S, T
	262235	SB43	430	R, S, T
Connect Upgrade	262250	SU35	350	U
	262251	SU40	400	U
	262252	SU45	450	U
	262253	SU48	475	U
	262254	SU50	500	U
	262255	SU53	530	U
	262256	SU55	550	U
	262257	SU55B	550	U
	262258	SU58	580	U
	262259	SU60	600	U
	262260	SU65	650	U
	262261	SU65B	650	U
	262262	SU65C	650	U
	262263	SU70	700	U

Short code / Long code
Kurznummer / Artikelnummer

	Short code *Kurznummer*	Long code *Artikelnummer*
Connect Front	SC35	262200
	SC38	262201
	SC40	262202
	SC43	262203
	SC45	262204
	SC48	262205
	SC50	262206
	SC53	262207
	SC55	262208
	SC55B	262209
	SC58	262210
	SC60	262211
	SC60B	262212
	SC65	262213
	SC65B	262214
	SC70	262215
	SC70B	262216
	SC75	262217
	SC75B	262218
	SC80	262219
Connect Rear	SB24	262230
	SB28	262231
	SB33	262232
	SB38	262233
	SB40	262234
	SB43	262235
Connect Upgrade	SU35	262250
	SU40	262251
	SU45	262252
	SU48	262253
	SU50	262254
	SU53	262255
	SU55	262256
	SU55B	262257
	SU58	262258
	SU60	262259
	SU65	262260
	SU65B	262261
	SU65C	262262
	SU70	262263

Connect

verbindet Experten**

SWF Connect range overview

SWF Connect Sortimentsübersicht

The SWF brand

- A brand that combines tradition and innovation.

Die Marke SWF

- *Eine Marke, die Tradition und Innovation vereint.*

1922

SWF "Spezial Werkzeugfabrik Feuerbach" is founded in Bietigheim, Germany.

SWF «Spezial Werkzeugfabrik Feuerbach» in Bietigheim, Deutschland, gegründet.

1927

First wipers and development of electric wiper motors, washing systems, lighting and other automotive parts.

SWF beginnt mit der Herstellung von Scheibenwischern und der Entwicklung von elektrischen Wischermotoren, Beleuchtungselementen und anderen Automobilersatzteilen.

1935

First wipers for curved windscreens.

Erster Scheibenwischer für gekrümmte Windschutzscheiben.

1958

First wipers specific to commercial vehicles.

Erster Scheibenwischer speziell für Nutzfahrzeuge entwickelt.

1974

The 1-meter wiper for buses; first integrated spoiler.

Das 1-Meter-Wischblatt für Busse und die Erfindung des integrierten Spoilers.

1998

Integration in the Valeo Group. With SWF, Valeo becomes a market leader in wiper systems.

SWF wird ein Teil der Valeo Gruppe. Mit SWF wird Valeo globaler Marktführer für Wischersysteme.

2017

NEW
NEUE

Launch of SWF Connect range.

Einführung des SWF-Connect Sortiments

Connect
verbindet Experten**

2005

The introduction of
the first Flat Blade upgrade.

Einführung des ersten Flachwischer-Nachrüstsortiments VisioFlex®.

2000

First wear indicator
for SWF wipers.

Erste Verschleißanzeige für SWF Scheibenwischer - von SWF erfunden!

2013

Launch of complete
Flat Blade range for
Trucks - VisioFlex® Trucks.

Einführung eines Komplettsortiments an VisioFlex® Flachwischern für LKWs.

SWF SWF SWF

2002

The first O.E. Flat Blades
are developed and launched.

SWF liefert ersten Flachwischer in die Erstausrüstung.

2014

Launch of a complete hybrid range single blades.

Einführung des ersten HBlade-Einzelwischer Sortiments für den I.A.M.

2012

The Valeo Group wins a PACE* award
for its AquaBlade® system produced
in the Bietigheim plant in Germany.

Die Valeo-Gruppe gewinnt den PACE Award für sein Aquablade®-System das im Werk in Bietigheim, Deutschland produziert wird.*

*Premier Automotive Suppliers' Contribution to Excellence Award

SWF the German wiper specialist for the aftermarket

Connect
Front

SC35 > SC80

Connect
Rear

SB24 > SB43

Discover how we test SWF wiper blades in our labs and on racing tracks.

Entdecken Sie, wie wir unsere SWF-Wischblätter im Labor und auf der Rennstrecke testen.

Connect

verbindet Experten**

Connect Upgrade

SU35 > SU70

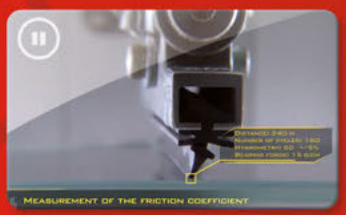

www.youtube.com/user/SWFperformance

New *short codes!*

S = SWF

C = Connect

35 = 35 cm

LONG CODE		NEW SHORT CODE
262200	>	SC35
262219	>	SC80

Connect

Front

- **96% European car park coverage from 20 references**
- *96% europäische Fuhrparkabdeckung mit 20 Artikeln*

- **Enhanced visibility thanks to an asymmetrical spoiler**
- *Verbesserte Sicht dank des asymmetrischen Spoilers*

- **Easy to fit**
- *Einfache Montage*

ORIGINAL TECHNOLOGY

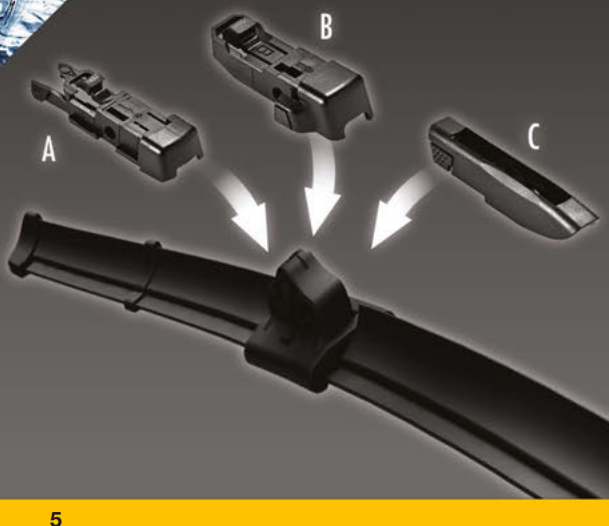

New *short codes!*

S = SWF

B = Back

24 = 24 cm

LONG CODE		NEW SHORT CODE
262230	>	SB24
262235	>	SB43

Connect

Rear

- **96% European car park coverage from 6 references**
- *96% europäische Fuhrparkabdeckung mit 6 Artikeln*

- **Durable visibility thanks to high tech rubber with a protective coating**
- *Dauerhafte Wischleistung dank Hightech Wischgummi mit Schutzbeschichtung*

- **Easy to fit**
- *Einfache Montage*

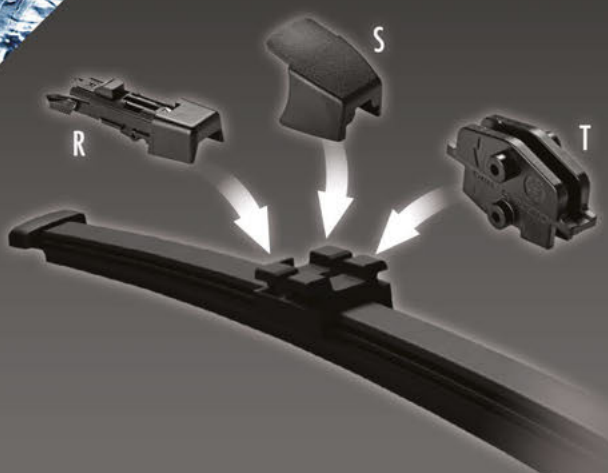

New *short codes!*

S = SWF

U = Upgrade

35 = 35 cm

LONG CODE		NEW SHORT CODE
262250	>	SU35
262263	>	SU70

Connect Upgrade

- **Universal pre-mounted adaptor**
- *Vormontierter Universaladapter*

- **Enhanced visibility thanks to even pressure across the windshield**
- *Verbesserte Sicht dank des asymmetrischen Spoilers*

- **Easy to fit**
- *Einfache Montage*

PERFORMANCE BOOST

GB **E**very effort has been made to ensure that the information contained in the catalogue is correct at the time of printing, but no warranty or representation is given or made as to the accuracy of such information and Valeo Service (UK) Ltd does not accept any liability whatsoever for any inaccuracies.
Valeo Service (UK) Ltd reserves the right to alter specifications and/or the final construction of products without notice. Product references referred to in this catalogue may not be available in all countries.
All orders for products are only accepted subject to the terms and conditions of Valeo Service (UK) Ltd. Photographs and drawings are not binding on Valeo Service (UK) Ltd. The copyright in this publication belongs to Valeo Service (UK) Ltd exclusively. No part of this publication may be reproduced by any means without the prior authorization of Valeo Service (UK) Ltd.

D **D**ie Verwendungsempfehlungen zu den in diesem Katalog aufgeführten Produkten beziehen sich auf den zum Zeitpunkt des Erscheinens dieses Katalogs existierenden Fahrzeugbestand.
Valeo Service Deutschland GmbH übernimmt keine Haftung für Änderungen, Ersetzungen oder Streichungen der Fahrzeuganwendung oder -Empfehlungen, die besonders auf Initiative der Fahrzeughersteller auftreten können.
Die technischen Eigenschaften unserer Produkte unterliegen ständiger Entwicklung, um technischen und technologischen Verbesserungen Rechnung zu tragen.
Die Fotos oder Zeichnungen in diesem Katalog dienen ausschließlich der Veranschaulichung unserer Produkte.
Rechtliche Ansprüche können daraus nicht abgeleitet werden. Einige Produktreferenzen sind nicht in allen Ländern verfügbar. Lieferungen unterliegen den Allgemeinen Verkaufsbedingungen von Valeo Service Deutschland GmbH.
Die Vervielfältigung dieses Katalogs oder Teilen davon ohne die schriftliche Erlaubnis von Valeo Service Deutschland GmbH ist nicht zulässig.

F **L**'affectation et la préconisation des produits figurant dans nos catalogues prennent en compte l'état du parc automobile au jour de leur parution.
La responsabilité de Valeo Service ne saurait être engagée en cas de modification, substitution ou suppression des affectations ou préconisations qui pourraient intervenir notamment à l'initiative des constructeurs de véhicules.
Les caractéristiques techniques de nos produits sont susceptibles d'évoluer à tout moment pour tenir compte des améliorations techniques et technologiques.
Certaines références peuvent ne pas être disponibles dans tous les pays.
Les commandes sont régies par les conditions générales de vente de Valeo Service.
Photos et dessins non contractuels. La reproduction de tout ou partie de cette publication est interdite sans l'autorisation expresse et écrite de Valeo Service.

NL **D**e ter zake van de producten in onze catalogi aangegeven bestemmingen en gedane aanbevelingen zijn gebaseerd op het wagenpark ten tijde van publicatie.
Valeo Service Benelux B.V. sluit elke aansprakelijkheid uit met betrekking tot wijziging, vervanging of annulering van de bestemmingen of aanbevelingen, die met name op initiatief van de autofabrikanten kunnen worden doorgevoerd.
De technische eigenschappen van onze producten kunnen ten alle tijden evolueren teneinde rekening te houden met technische en technologische verbeteringen. Bepaalde artikelen kunnen in bepaalde landen niet beschikbaar zijn.
Orders zijn onderworpen aan de algemene verkoopvoorwaarden van Valeo Service Benelux B.V.
Foto's en tekeningen zijn niet bindend.
De gehele of gedeeltelijke verveelvoudiging van deze uitgave zonder uitdrukkelijke voorafgaande schriftelijke toestemming van Valeo Service Benelux B.V. is verboden.

SP **L**a aplicación de los productos sobre vehículos y las especificaciones de los productos que figuran en nuestros catálogos se refieren a la situación del parque de automóviles en la fecha de puesta en circulación de los productos.
Valeo Service España SA no asume ninguna responsabilidad en caso de modificación, sustitución o supresión de dichas aplicaciones y/o especificaciones que pudieran producirse por iniciativa de los fabricantes de automóviles.
Las características técnicas de nuestros productos son susceptibles de evolucionar en cualquier momento para incorporar las mejoras técnicas y tecnológicas que se desarrollen.
Las referencias de productos mencionadas en este catalogo puede que no estén disponibles en todos los países.
Los pedidos se regiran por las conditiones generales de venta de Valeo Service España SA.
Las fotografías y dibujos que aparecen en nuestros catálogos son meramente indicativas, por lo que no siempre coinciden exactamente con la apariencia externa de nuestros productos.
Se prohíbe la reproducción de todo o parte de esta publicación sin la autorización expresa y escrita de Valeo Service España SA.

P **A**s prescrições e recomendações relativas ao uso ou utilidade dos produtos constantes nos nossos catálogos levam em consideração o estado do parque automóvel à época do lançamento desses produtos.
A Valeo Service não será responsável por quaisquer modificações, substituições ou supressões incidentes sobre as prescrições e recome dações relativas ao uso ou utilidade de nossos produtos, que sejam decorrentes de ações dos construtores de veículos.
As características técnicas dos nossos produtos são suscetíveis de alteração a qualquer momento para que sejam incorporadas melhorias técnicas e/ou tecnológicas.
Certas referências podem não estar disponíveis em todos os países.
Os pedidos feitos pelos clientes são regidos pelas condições gerais de venda da Valeo Service.
Fotos e desenhos não contratuais. A reprodução do todo ou de parte desta publicação é proibida sem a autorização expressa e por escrito da Valeo Service.

I Le applicazioni e le specifiche dei prodotti che figurano nei nostri cataloghi si riferiscono alla situazione del parco circolante al momento della pubblicazione.
Valeo Service Italia S.p.A. declina qualsiasi responsabilità in caso di modifica, sostituzione o soppressione di applicazioni o specifiche eventualmente apportate, senza preavviso, da parte dei Costruttori .
Le caratteristiche tecniche dei nostri prodotti sono suscettibili di modifiche in qualsiasi momento, per apportare migliorie tecniche e tecnologiche.
Alcuni riferimenti presenti in questo catalogo non sono disponibili in tutti i paesi.
Gli ordini sono regolamentati dalle condizioni generali di vendita di Valeo Service Italia S.p.A..
Le Foto ed i disegni che appaiono nel catalogo sono puramente indicativi. E' vietata la riproduzione della totalità o di una parte della presente pubblicazione senza un'esplicita autorizzazione scritta da parte di Valeo Service Italia S.p.A..

FIN **V**aleo Service on tehnyt kaiken voitavansa varmistuakseen tässä luettelossa annettavan tiedon oikeellisuudesta painatushetkellä, mutta se ei voi antaa vakuutta tietojen virheettömyydestä eikä hyväksy epätarkkuuksiin liittyviä korvausvaatimuksia.
Valeo Service pidättää itsellään oikeuden muuttaa tuotteiden teknisia tietoja ja/tai lopullista rakennetta ilman erillisilmoitusta.
Kaikkia tässä luettelossa mainittuja tuotteita ei mahdollisesti ole saatavilla kaikissa maissa.
Tuotetilaukset hyväksytään ainoastaan Valeo Service ehdoin.
Valokuvat ja piirrokset eivät sido Valeo Service oikeudellisesti. Kaikki tämän luettelon tekijänoikeudet kuuluvat Valeo Service :lle.
Julkaisun osittainenkin kopioiminen ilman Valeo Service etukäteen antamaa suostumusta on kielletty.

S **R**ekomendationerna i denna katalog grundar sig på tillgängliga uppgifter vid produktionstillfället. Genom ersättningar eller andra ändringar gjorda av fordonstillverkaren eller i torkarbladsproduktionen ansvaras ej och inga ersättningsanspråk kan därvid ställas.
För eventuella felaktigheter i kataloguppgifterna ansvaras ej. Det åligger montören att följa monteringsanvisningen och att säkerställa att produkten motsvarar den utbytta. Kopiering av katalogen eller delar av den utan skriftligt godkännande av Valeo Service är ej tillåtet.

RUS Назначение и рекомендации по эксплуатации продуктов, содержащихся в наших каталогах, указываются с учетом состояния автомобильного парка на день их появления на рынке.
Компания Общество с ограниченной ответственностью "Валео Сервис" не может нести ответственности в случае внесения изменений в рекомендации по эксплуатации продукции или их устранения, произошедших, в частности, по инициативе производителей автомобилей.
Технические характеристики нашей продукции могут претерпевать изменения в любой момент, с учетом усовершенствования технических и технологических процессов.
Некоторые виды продукции могут быть недоступные в отдельных странах.
Заказы осуществляются согласно общим правилам торговли, применяемым в компании Общество с ограниченной ответственностью "Валео Сервис".
Фотографии и изображения продукции могут не в полной мере соответствовать оригиналам. Воспроизведение всей или части настоящей публикации запрещено без специального письменного согласия компании Общество с ограниченной ответственностью "Валео Сервис".

PL Przeznaczenie i zalecenia dotyczące produktów figurujących w naszych katalogach biorą pod uwagę stan parku samochodowego w dniu ich wprowadzenia na rynek.
Firma «Valeo Service Eastern Europe Sp.z o.o.» nie może ponosić odpowiedzialności w przypadku zmiany, zastąpienia lub usunięcia wskazówek dotyczących przeznaczenia i zaleceń, które mogą wystąpić z inicjatywy producentów samochodów.
Dane techniczne naszych produktów mogą być w każdej chwili zmienione w celu uwzględnienia ulepszeń technicznych i technologicznych.
Niektóre modele mogą być niedostępne w niektórych krajach.
Zamówienia podlegają ogólnym warunkom umów «Valeo Service Eastern Europe Sp.zo.o.».
Wykorzystywanie w całości lub w części zdjęć i rysunków zamieszczonych w naszych katalogach wymaga pisemnej zgody «Valeo Service Eastern Europe Sp.z o.o.»

GR Έγινε κάθε προσπάθεια για να διασφαλιστεί η ορθότητα των πληροφοριών που περιέχονται σε αυτόν τον κατάλογο κατά την ημερομηνία εκτύπωσης του, αλλά δεν δίδεται καμία εγγύηση για την ακρίβεια των πληροφοριών αυτών και η Valeo Service δεν θα δεχτεί καμία απολύτως ευθύνη για οποιαδήποτε ανακρίβεια που μπορεί να προκύψει.
Η Valeo Service διατηρεί το δικαίωμα να αλλάζει προδιαγραφές και/ή την τελική μορφή των προϊόντων χωρίς προηγούμενη προειδοποίηση. Οι κωδικοί των προϊόντων που περιλαμβάνονται σε αυτόν τον κατάλογο μπορεί να μην είναι διαθέσιμοι και σε άλλες χώρες. Όλες οι παραγγελίες για προϊόντα γίνονται δεκτές μόνο κάτω από τους όρους και τις συνθήκες που ορίζει η Valeo Service. Οι φωτογραφίες και τα σχέδια δεν είναι δεσμευτικά για τη Valeo Service. Κανένα μέρος αυτής της έκδοσης δεν επιτρέπεται να αντιγραφεί με κανένα τρόπο χωρίς την προηγούμενη έγκριση της Valeo Service.

TR Kataloglarımızda yer alan ürünlerin tanım ve uygulama açıklamaları, araç parkının yayın tarihindeki durumuna göre belirtilmiştir.
Valeo Otomotiv Dağıtım A.Ş., özellikle araç, üreticilerinin inisiyatifi sonucu yapılan değişiklik, ikame veya yürürlükten kaldırmalardan sorumlu tutulamaz.
Ürünlerimizin teknik özellikleri, teknik ve teknolojik gelişmelere paralel olarak geliştirilebilir.
Bazı referanslar bazı ülkelerde bulunmayabilir.
Tüm siparişler, Valeo Otomotiv Dağıtım A.Ş.'nin genel satış koşullarına uygun olarak kabul edilir.
Fotoğraf ve resimler akdi değildir. Iş bu yayının Valeo Otomotiv Dağıtım A.Ş.'nin önceden verilmiş yazılı izni olmaksızın kısmen veya tamamen çoğaltılması yasaktır.

Summary
Übersicht

Connect
verbindet Experten**

1 SWF → 12

2 D P GB I 16

3 SWF 17

4 IAM OES 45

5 46

1

SWF	x1 x2	mm/ inches		For/Für main applications / Hauptfahrzeuganwendungen	
SWF CONNECT Front					
SC35	**262200**	x1	350 / 14	A,C	FORD **KA 2** (11/10 >) OPEL **Mokka** (10/12 >) RENAULT **Captur** (04/13 > 06/16) **Clio 4** (10/12 >) SMART (MCC) **Fortwo 3** (11/14 >)
SC38	**262201**	x1	380 / 15	A,B,	AUDI **A1 (8X1)** (09/10 >) **A1 (8XA) Sportback** (02/12 >) FIAT **Punto / Evo / Abarth** (10/09 >) FORD **Transit Courier** (06/14 >) NISSAN **Qashqai** (03/07 > 01/14)
SC40	**262202**	x1	400 / 16	A,B,C	BMW **X1 (F48)** (10/15 >) FIAT **AEgea** (06/16 >) **Tipo** (05/16 >) FORD **KA +** (09/16 >) VOLKSWAGEN **Touran 3** (09/15 >)
SC43	**262203**	x1	430 / 17	A,B	FORD **Focus 2** (10/04 > 08/05) **Focus 2** (09/05 > 02/11) PEUGEOT **207** (04/06 > 03/12) VOLKSWAGEN **Polo 4** (11/01 > 09/02) **Polo 4** (10/02 > 06/05)
SC45	**262204**	x1	450 / 18	A,B,C	ALFA ROMEO **Giulia** (06/16 >) RENAULT **Megane 4** (01/16 >) **Talisman** (10/15 >) VOLKSWAGEN **Caddy Alltrack** (12/15 >) **Golf 7 Alltrack** (04/15 >)
SC48	**262205**	x1	475 / 19	A,B	JAGUAR **F-Pace** (05/16 >) MERCEDES **A-Class (W176)** (09/12 > 07/15) **B-Class (W246)** (11/11 > 08/15) MINI **Mini Countryman/ All 4** (10/10 >) VOLKSWAGEN **Passat 8** (11/14 >)
SC50	**262206**	x1	500 / 20	A,B,C	AUDI **A4 (8KH,B8) Allroad Quattro** (05/09 > 06/16) **A4 (8WH) Allroad Quattro** (07/16 >) **A5 / S5 (F53)** (11/16 >) PEUGEOT **Expert** (06/16 >) VOLKSWAGEN **Tiguan 1** (11/07 > 05/16)
SC53	**262207**	x1	530 / 21	A,B	AUDI **A7 / S7 / RS7 (4GA,4GF) Sportback** (11/10 >) LAND ROVER **Evoque** (02/16 >) MINI **Mini Clubman** (10/15 >) VOLKSWAGEN **Polo 4** (11/01 > 09/02) **Polo 4** (10/02 > 06/05)
SC55	**262208**	x1	550 / 22	A,B,C	AUDI **TT (8J3,8J9)** (09/06 > 09/14) FORD **KA +** (09/16 >) MERCEDES **Citan / Combi (W415)** (10/12 >) **SLC-Class (R173)** (03/16 >) VOLKSWAGEN **Tiguan 2** (06/16 >)
SC55B	**262209**	x1	550 / 22	A	CITROËN **C5 2** (04/08 >) **C5 Tourer / Cross Tourer 2 Tourer** (05/08 >) MERCEDES **A-Class (W169)** (09/04 > 08/12) **B-Class (W245)** (05/05 > 10/11) OPEL **Zafira B** (07/05 >)
SC58	**262210**	x1	580 / 23	A,B	ALFA ROMEO **Alfa 159** (09/05 > 12/13) BMW **5-Series (E60)** (05/03 > 02/10) **5-Series (E61) Touring** (04/04 > 08/10) **6-Series (E63)/(E64)** (01/04 > 02/11) JAGUAR **XF / XF R** (03/08 > 09/15)
SC60	**262211**	x1	600 / 24	A,B,C	ALFA ROMEO **Giulia** (06/16 >) AUDI **A1 (8X1)** (09/10 >) BMW **3-Series (E92)/(E93)** (10/09 > 02/14) VOLKSWAGEN **Golf 5** (11/03 > 11/05) **Tiguan 1** (11/07 > 05/16)

SWF		x1 x2	mm/ inches		For/Für main applications / Hauptfahrzeuganwendungen	
SWF CONNECT Front (...)						
SC60B	**262212**	x1	600 / 24	A	CITROËN	**C4** (11/04 > 09/10)
					FORD	**C-Max** (10/10 >)
						Grand C-Max (10/10 >)
					OPEL	**Astra K** (10/15 >)
						Astra K Sports Tourer (04/16 >)
SC65	**262213**	x1	650 / 26	A,B,C	BMW	**2-Series Gran Tourer (F46)** (06/15 >)
					FORD	**Fiesta 6** (10/08 > 08/10)
					JAGUAR	**F-Pace** (05/16 >)
					MERCEDES	**B-Class (W245)** (05/05 > 10/11)
						B-Class (W246) (11/11 > 08/15)
SC65B	**262214**	x1	650 / 26	A,B,C	FORD	**B-Max** (09/12 >)
						S-Max (05/06 > 08/15)
					MERCEDES	**Vito (W639)** (11/05 > 05/14)
					OPEL	**Astra J** (01/10 > 09/15)
						Astra J Sports Tourer (01/11 > 03/16)
SC70	**262215**	x1	700 / 28	A,B	FORD	**Grand C-Max** (10/10 >)
					MERCEDES	**Viano (W639)** (11/05 > 02/11)
						Viano (W639) (03/11 > 06/14)
					OPEL	**Astra K** (10/15 >)
						Astra K Sports Tourer (04/16 >)
SC70B	**262216**	x1	700 / 28	A,B	PEUGEOT	**407** (04/04 > 02/11)
					RENAULT	**Espace 5** (04/15 >)
						Scenic 4 (10/16 >)
					VOLKSWAGEN	**Golf Plus / Cross Golf** (03/05 > 03/09)
						Golf Plus / Cross Golf (04/09 > 03/14)
SC75	**262217**	x1	750 / 30	A,C	DS	**DS 4 Crossback** (11/15 >)
					FORD	**S-Max** (05/06 > 08/15)
						Transit (Fourgon 2T) (05/14 >)
					PEUGEOT	**308** (09/07 > 08/13)
					RENAULT	**Espace 5** (04/15 >)
SC75B	**262218**	x1	750 / 30	A,B,C	CITROËN	**C4 Picasso** (06/08 > 05/13)
						C4 Picasso (06/13 >)
						Grand C4 Picasso (10/13 >)
					FORD	**Tourneo / Transit Connect** (12/13 >)
						Transit Connect (12/13 >)
SC80	**262219**	x1	800 / 31	A,B,C	OPEL	**Zafira C Tourer** (11/11 >)
					PEUGEOT	**3008 / Hybrid 4** (04/09 >)
						5008 (10/09 >)
					RENAULT	**Grand Scenic 4** (01/17 >)
						Scenic 4 (10/16 >)
SWF CONNECT Rear						
SB24	**262230**	x1	240 / 10	R,T	MERCEDES	**A-Class (W176)** (09/12 > 07/15)
					RENAULT	**Clio 4** (10/12 >)
						Clio 4 Estate (03/13 >)
					SKODA	**Citigo** (05/12 >)
					VOLKSWAGEN	**Up / Cross Up / Eco Up** (01/12 >)
SB28	**262231**	x1	280 / 11	R,S,T	BMW	**1-Series (E81)** (03/07 > 12/11)
						1-Series (E87) (09/04 > 08/11)
					SEAT	**Leon 2** (05/09 > 12/12)
					VOLKSWAGEN	**Golf 7** (11/12 >)
						Passat 6 Variant/ SW (09/05 > 10/10)
SB33	**262232**	x1	335 / 13	R,S,T	MERCEDES	**CLA-Class Shooting Brake (X117)** (03/15 > 07/15)
					VOLKSWAGEN	**Golf 5** (11/03 > 11/05)
						Golf 5 (12/05 > 09/08)
						Polo 4 (10/02 > 06/05)
						Polo / Cross Polo 5 (07/05 > 08/09)

1

SWF	x1 / x2	mm/ inches		For/Für main applications / Hauptfahrzeuganwendungen	
SWF CONNECT Rear (...)					
SB38	**262233**	x1	380 / 15	R,T	AUDI **A4 (8WH) Allroad Quattro** (07/16 >) BMW **X5 (E70)** (03/07 > 09/11) **X5 (E70)** (10/11 > 10/13) SEAT **Leon 3 SC** (05/13 >) VOLVO **XC60** (09/08 > 12/10)
SB40	**262234**	x1	400 / 16	R,S,T	AUDI **Q3 (8U)** (10/11 >) SEAT **Toledo 4** (09/12 >) VOLKSWAGEN **Caddy Alltrack** (12/15 >) **Transporter T5** (11/03 > 08/13) **Transporter T5** (09/13 > 07/15)
SB43	**262235**	x1	430 / 17	R,S,T	MERCEDES **Sprinter (906)** (06/06 >) VOLKSWAGEN **Transporter T5** (11/03 > 08/13) **Transporter T5** (09/13 > 07/15) **Transporter T6** (08/15 >)
SWF CONNECT Upgrade					
SU35	**262250**	x1	350 / 14	U	HONDA **Jazz** (10/15 >) HYUNDAI **i 30** (12/12 >) **i 30** (03/12 >) NISSAN **Juke** (10/10 >) VOLKSWAGEN **Fox** (06/05 > 12/11)
SU40	**262251**	x1	400 / 16	U	FORD **Fiesta 5** (05/02 > 10/08) **Fusion** (10/02 > 02/12) RENAULT **Kadjar** (06/15 >) TOYOTA **Yaris 1 (Made in France)** (02/01 > 12/05) **Yaris 1 (Made in Japan)** (04/99 > 12/05)
SU45	**262252**	x1	450 / 18	U	AUDI **A3 (8L1)** (10/96 > 05/03) FIAT **124 Spider** (06/16 >) SEAT **Leon 1** (03/00 > 04/06) TOYOTA **Corolla (E12) (Made in Europe)** (01/02 > 03/07) **Corolla (E12) (Made in Europe)** (10/02 > 03/07)
SU48	**262253**	x1	475 / 19	U	SKODA **Octavia 1** (10/00 >) **Octavia 1 Combi** (03/98 > 01/05) TOYOTA **Rav 4** (08/00 > 02/06) VOLKSWAGEN **Golf 4** (11/97 > 06/02) **Golf 4** (05/99 > 06/02)
SU50	**262254**	x1	500 / 20	U	BMW **3-Series (E46)** (05/98 > 02/05) **X3 (E83)** (01/04 > 10/10) FORD **Mondeo 2** (01/01 > 05/07) **Mondeo 2** (01/01 > 05/07) OPEL **Corsa C** (10/00 > 08/06)
SU53	**262255**	x1	530 / 21	U	BMW **3-Series (E36)** (04/91 > 03/00) NISSAN **Micra (K13)** (11/10 >) PEUGEOT **4007** (07/07 > 12/12) **4008** (05/12 >) VOLKSWAGEN **Fox** (06/05 > 12/11)
SU55	**262256**	x1	550 / 22	U	ALFA ROMEO **Alfa 156** (09/97 > 02/06) BMW **X3 (E83)** (01/04 > 10/10) FIAT **Fullback** (05/16 >) MAZDA **Mazda 6** (07/02 > 02/08) MERCEDES **Sprinter** (05/95 > 05/06)
SU55B	**262257**	x1	550 / 22	U	HONDA **Civic 8 Hybrid** (03/08 >) MERCEDES **A-Class (W168)** (09/97 > 08/04) **Vaneo (W414)** (04/02 > 03/04) OPEL **Meriva A** (04/03 > 05/10) **Zafira A** (03/99 > 06/05)
SU58	**262258**	x1	580 / 23	U	BMW **3-Series (E46)** (05/98 > 02/05) **3-Series (E46)** (03/99 > 09/06) **3-Series (E46)** (04/00 > 09/06) **3-Series (E46) Touring** (11/99 > 08/05) **3-Series (E46) Compact** (07/01 >)

SWF	x1 x2	mm/ inches		For/Für main applications / Hauptfahrzeuganwendungen	
▶ SWF CONNECT Upgrade (...)					
SU60	**262259**	x1	600 / 24	U	OPEL **Meriva A** (04/03 > 05/10) **Zafira A** (03/99 > 06/05) TOYOTA **Rav 4** (08/00 > 02/06) **Rav 4** (03/06 > 03/13) VOLVO **XC90** (01/03 > 04/04)
SU65	**262260**	x1	650 / 26	U	LAND ROVER **Discovery Sport** (03/15 >) MERCEDES **A-Class (W168)** (09/97 > 08/04) **Vaneo (W414)** (04/02 > 03/04) NISSAN **Qashqai** (02/14 >) TOYOTA **Auris 2** (01/13 >)
SU65B	**262261**	x1	650 / 26	U	CHRYSLER **Voyager 3** (03/96 > 02/01) **Voyager / Grand Voyager 4** (04/01 > 03/08) KIA **Carens** (04/13 >) PEUGEOT **307** (05/01 > 09/04) **307 SW** (04/02 > 09/04)
SU65C	**262262**	x1	700 / 28	U	PEUGEOT **107** (06/05 > 05/14) RENAULT **Twingo 1** (03/93 > 05/07) SMART (MCC) **Forfour** (05/04 > 12/06) TOYOTA **Aygo** (06/05 > 05/14) **Prius 2** (03/04 > 06/09)
SU70	**262263**	x1	650 / 26	U	CHRYSLER **Voyager 3** (03/96 > 02/01) **Voyager / Grand Voyager 4** (04/01 > 03/08) PEUGEOT **307** (05/01 > 09/04) **307 SW** (04/02 > 09/04) TOYOTA **Prius +** (06/12 >)

2

D Heckwischblatt
GB Rear Blade
F Balais Arrière
NL Achter wisser
E Escobilla trasera
P Escova de tras
I Tergicristallo posteriore
PL Wycieraczka tylna
RU Задний стеклоочиститель
TU Arka cam silecegi
GR Πίσω υαλοκαθαριστήρας
S Bakruta
DK Achter wisser
FIN Takapyyhkijä

D Baujahr
GB Dates
F Date
NL Data
E Fecha
P Data
I Data
PL Data
RU Даты
TU Uygulama tarihi
GR Ημερομηνία κατασκευής
S Årsmodell
DK Årgang
FIN Päivämäärä

D Fahrerseite
GB Driver Side
F Conducteur
NL Bestuurder
E Lado conductor
P Lado condutor
I Lato guida
PL Strona kierowcy
RU Сторона водителя
TU Sürücü tarafı
GR Θέση οδηγού
S Förarsida
DK Førerside
FIN Kuskin puoli

D Beifahrerseite
GB Passenger Side
F Passager
NL Passagier
E Lado pasajero
P Lado passageiro
I Lato passeggero
PL Strona pasażera
RU Сторона пассажира
TU Yolcu tarafı
GR Θέση συνοδηγού
S Passagerarsida
DK Passagerside
FIN Matkustajan puoli

D Nur für Rechtslenker
GB for Right Hand Drive only
F Conduite à droite
NL Rechtsgestuurd voertuig
E Únicamente para conducción a derechas
P Para conduzir a direita unicamente
I Guida a destra
PL Tylko ruch prawostronny
RU Только для авто с правым расположением руля
TU Yalnızca sagdan direksiyonlu araçlar için
GR Δεξιοτίμονο μόνο
S Endast för högerstyrd
DK Kun Højrestyrede
FIN Vain oikean puoleiselle liikenteelle

D Adapter
GB Adaptor
F adaptateur
NL Adapter
E Adaptador
P Adaptador
I Adattatore
PL Adaptor
RU Адаптер
TU Adaptör
GR Αντάπτορας
S Adapter
DK Adaptor
FIN Adapteri

x1

D Einarmwischer
GB Monoblade
F monobalai
NL Enkele wisser
E Mono escobilla
P Mono-escova
I Mono spazzola
PL Wycieraczka pojedyncza
RU Один стеклоочиститель
TU Tek silecek
GR Με 1 υαλοκαθαριστήρα
S Singel torkare
DK Enkelt viskerblad
FIN Monoblade

D Mit 2 Hecktüren
GB 2 rear doors
F 2 portes arrières
NL 2 deuren achter
E 2 puertas traseras
P 2 portas atrás
I 2 porte posteriori
PL Dwoje tylnych drzwi
RU Две задние двери
TU Çift bagaj kapısı
GR 2 πίσω πόρτες
S Med dubbla bakdörrar
DK 2 bagdøre
FIN 2 takaovea

D Heckklappe
GB Tailgate
F Hayon arrière
NL Achter klep
E Porton trasero
P Portas detrás
I Sportello
PL Tylna klapa
RU Крышка багажника
TU Tek bagaj kapısı
GR Πίσω πόρτα
S Bakdörr
DK Bagklap
FIN Takaovi

D Coupe
GB Coupe
F Coupé
NL Coupe
E Coupé
P Coupe
I Coupé
PL Coupe
RU Купе
TU Coupe
GR Coupé
S Coupé
DK Coupé
FIN Coupe

D Cabrio
GB Cabriolet
F Cabriolet
NL Cabriolet
E Cabriolet
P Descapotavel
I Cabriolet
PL Kabriolet
RU Кабриолет
TU Üstü açık
GR Cabrio
S Cabriolet
DK Cabriolet
FIN Cabriolet

D Kombi
GB Estate
F Break
NL Stationwagon
E Break
P Carrinha
I Station Wagon
PL Kombi
RU Универсал
TU Station Wagon
GR Station wagon
S Kombi
DK Stationcar
FIN Farmari

D Limousine
GB Saloon
F Berline
NL Sedan
E Berlina
P 4 portas
I Berlina
PL Sedan
RU Седан
TU Sedan
GR Τετράθυρο
S Sedan
DK Sedan
FIN Sedan

2 3 4 5

D Anzahl der Türen
GB Number of doors
F nombre de portes
NL Aantal deuren
E Numero de puertas
P Numero de portas
I Numero di porte
PL Ilość drzwi
RU Количество дверей
TU Kapı sayısı
GR Αριθμός θυρών
S Antal dörrar
DK Antal døre
FIN Ovien lukumäärä

D Haken
GB Hook
F Accrochage Crochet
NL Haakje
E Fijacion por gancho
P Fixaçao por gancho
I Adattatore
PL Hak
RU Поводок с крючком
TU Kancalı silecek kolu
GR Γάντζος
S Krok
DK Krog
FIN Koukku

D Baionnetteverschluß
GB Bayonet
F Baionnette
NL Bajonet
E Fijacion tipo bayoneta
P fixaçao tipo "baionette"
I Baionetta
PL Bagnet
RU Прямой поводок
TU Düz silecek kolu
GR Με κούμπωμα
S Bajonettfäste
DK Bajonet
FIN Tappikiinnitys

D Seitliche Befestigung
GB Side Fixing
F Accrochage latéral
NL Zij-bevestiging
E Fijacion lateral
P Fixaçao lateral
I Fissagio laterale
PL Boczne mocowanie
RU Боковое крепление
TU Yan baglantı
GR Με πλάγια στήριξη
S Sido fäste
DK Sidemonteret
FIN Sivu kiinnitys

D Gegenlaufsystem
GB Butterfly Wiping
F Essuyage Papillon
NL Butterfly technologie
E Barrido cruzado (estilo mariposa)
P Limpeza cruzada
I Tergitura a farfalla
PL Wycieraczki przeciwbieżne
RU Распашная очистка
TU Kelebek silme
GR Διασταυρούμενος καθαρισμός
S Motgående
DK Butterfly visker
FIN Perhos pyyhintä

D Gleichlaufsystem
GB Parrallel Wiping
F Essuyage Parrallele
NL Conventionele technologie
E Barrido paralelo
P Limpeza paralelo
I Tergitura parallela
PL Wycieraczki równobieżne
RU Синхронизированная очистка
TU Paralel silme
GR Παράλληλος καθαρισμός
S Parallell
DK Parallel visker
FIN Tavallinen pyyhintä

D Standardwischer
GB Conventional Wiper Blade
F Essuie-Glace conventionnel
NL Conventioneel ruitenwisserblad
E Escobilla limpiaparabrisas convencional
P Escova Limpa-vidros Convencional
I Spazzola standard
PL Wycieraczka standardowa
RU Каркасная щетка
TU Klasik silecek
GR Συμβατικός υαλοκαθαριστήρας
S Standardblad
DK Standardblad
FIN Tavallinen pyyhkijän sulka

D Flachwischer
GB Flat Blade
F Essuie-Glace plat
NL Flat Blade
E Escobilla limpiaparabrisas plana
P Escova Plana
I Flatblade
PL Wycieraczka płaska
RU Бескаркасная щетка
TU Flatblade
GR Υαλοκαθαριστήρας Επίπεδης Λεπίδας
DK Flatblade
S Flatblade
FIN Rungoton pyyhkijän sulka

D Wischgummis
GB Refill
F Lame de rechange
NL Ruitenwisserrubber
E Lámina
I Gomma
PL Pióra wycieraczek
RU Резиновый элемент стеклоочистителя

D Für Fahrzeuge mit aufklappbarer Heckscheibe
GB For vehicle with opening rear window
F Pour véhicule avec lunette arrière ouvrante
NL Voor voertuigen met te openen achterruit
E Para vehículos con luneta trasera practicable
P Para veículo com janela traseira com abertura
I Per veicoli con lunotto posteriore apribile
PL Do samochodów z otwieraną tylną szybą
RU Для автомобилей с открывающимся задним стеклом
TU Arka camı açılan araçlar için
GR Για όχημα στο οποίο ανοίγει ξεχωριστά το τζάμι της πίσω πόρτας
S För fordon med öppnigsbar bakruta
DK For køretøjer med oplukkelig bagrude
FIN Avattava takalasi

D Für Fahrzeuge mit fester Heckscheibe
GB For vehicle with fixed rear window
F Pour véhicule avec lunette arrière fixe
NL Voor voertuigen met vaste achterruit
E Para vehículos con luneta trasera fija
P Para veículo com janela traseira fixa
I Per veicoli con lunotto posteriore fisso
PL Do samochodów z zamontowaną tylną szybą
RU Для автомобилей с фиксированным задним стеклом
TU Arka camı sabit araçlar için
GR Για όχημα με σταθερό τζάμι στην πίσω πόρτα
DK For køretøjer med fast bagrude
S För fordon med fast bakruta
FIN Kiinteä takalasi

D Kurzhakenbefestigung
GB Special Hook fastening
F Fixation par crochet spécial
NL Kortehaakbevestiging
E Fijacion por gancho especial
P Fijaçao especial de gancho
I Connessione a gancio speciale
PL Specjalne mocowanie haczykowe
TU Özel kancali silecek kolu
GR Ειδική σύνδεση με γάντζο
S Special Krokfäste
FIN Koukkukiinnitys

D Steck-schraub-befestigung
GB Snap-screw
F Fixation par vis-baïonette
NL Schroefbevestiging
E Fijacion por enchufe-tornillo
P Fijaçao por encaixe
I Baionetta
PL Uchwyt na zatrzask i śruby
GR Βιδωτό
S Rak arm med skruvfäste
FIN Tappikiinnitys ruuvilla

D Gebogenes wischblatt
GB Curved blade
F Essuie-glace courbe
NL Gebogen wisserblad
E Escobilla curva
P Escova curva
I Spazzola curva
PL Wycieraczka zakrzywiona
GR Καμπυλωτός υαλοκαθαριστήρας
S Svängt blad
DK Buede viskerblade

D Aufgesetzte sheibenwaschdüsen
GB Washer ramp mounted on blade
F Rampe d'arrosage montée
NL Sproeigallerij gemonteerd op wisserblad
E Rampa surtidora incorporada
P Sistema de rega montado
I Distributore per lavavetro incorporato
PL Z zamontowanym spryskiwaczem
TU Su püskürtücüleri kol üzerinde
GR Σύστημα πλύσης ενσωματωμένο στον υαλοκαθαριστήρα
S Spolarmunsticke
FIN Tuulilasin pesuneste
DK Sprinklerdyse, -bro monteret

For/Für				– SPOILER – – HBLADE –			
ABARTH							
124	Spider		06/16 →		**SU45** (U)	**SU48** (U)	
500	Abarth 595		03/12 →		**SC60** (3A)	**SC35** (3A)	
	Abarth 595C		03/12 →		**SC60** (3A)	**SC35** (3A)	
	Abarth 595 Turismo / Competizione		03/12 →		**SC60** (3A)	**SC35** (3A)	
	Abarth 595C Turismo / Competizione		03/12 →		**SC60** (3A)	**SC35** (3A)	
	Abarth 695 Biposto		03/12 →		**SC60** (3A)	**SC35** (3A)	
	Abarth 695 Edizione Maserati		03/12 →		**SC60** (3A)	**SC35** (3A)	
	Abarth 695C Tributo Maserati		03/12 →		**SC60** (3A)	**SC35** (3A)	
AIXAM							
A.721 / A.741 / A.751		x1	09/04 →		**SU55** (U)		
City / City S / GTO		x1	10/10 →		**SU55** (U)		
Crossline		x1	10/10 → 2013		**SU55** (U)		
Crossline / Crossover / Coupé		x1	01/14 →		**SU55** (U)		
Scouty R / Crossline		x1	09/04 → 05/08		**SU55** (U)		
Scouty R		x1	06/08 →		**SU55** (U)		
ALFA ROMEO							
Alfa 6			04/79 → 02/87		**SU45** (U)	**SU45** (U)	
Alfa 33		Q4	07/83 → 12/92		**SU45** (U)	**SU45** (U)	
			01/93 → 1995		**SU48** (U)	**SU48** (U)	
			07/83 → 12/92		**SU40** (U)	**SU40** (U)	
			07/83 → 12/92		**SU45** (U)	**SU45** (U)	
			01/93 →		**SU48** (U)	**SU48** (U)	
Alfa 75			07/83 → 09/86		**SU40** (U)	**SU40** (U)	
			10/86 → 1993		**SU45** (U)	**SU45** (U)	
Alfa 90			10/84 →		**SU45** (U)	**SU45** (U)	
Alfa 145			06/96 → 10/00		**SU55** (U)	**SU45** (U)	
Alfa 146			06/96 → 10/00		**SU55** (U)	**SU45** (U)	
Alfa 147			08/05 →		**SC55** (1B)	**SC40** (1B)	
Alfa 155			11/91 → 1997		**SU53** (U)	**SU48** (U)	
Alfa 156			09/97 → 02/06		**SU55** (U)	**SU50** (U)	
	Sport Wagon / Q4		06/00 → 02/06		**SU55** (U)	**SU50** (U)	
Alfa 159		4	09/05 → 12/13		**SC58** (1B)	**SC45** (1B)	
	Sport Wagon / Q4		03/06 → 12/13		**SC58** (1B)	**SC45** (1B)	
Alfa 164			07/87 → 11/92		**SU53** (U)	**SU53** (U)	
Alfa GTV			1982 → 1987		**SU45** (U)	**SU45** (U)	
Arna			1983 →		**SU50** (U)	**SU50** (U)	
Brera			10/05 → 12/11		**SC58** (1B)	**SC45** (1B)	
Coupé GT			07/05 →		**SC55** (1B)	**SC40** (1B)	
Giulia		4	06/16 →		**SC60** (3B)	**SC45** (3B)	
Giulietta			05/10 →		**SC60** (3A)	**SC45** (3A)	
MiTo		3	09/08 →		**SC60** (2A)	**SC40** (2A)	
R.Z.			1993 → 1995		**SU45** (U)	**SU45** (U)	
Spider			04/06 → 12/11		**SC58** (1B)	**SC45** (1B)	
AUDI							
80	(81,85,B2)		08/78 → 07/83		**SU45** (U)	**SU45** (U)	
			08/83 →		**SU53** (U)	**SU50** (U)	
80 / S2	(81,85,B2,89-89Q,8A,B3)		08/83 → 1991		**SU53** (U)	**SU50** (U)	
80 / RS2	(8C,B4)	Avant	09/91 → 1996		**SU53** (U)	**SU50** (U)	
90			10/84 → 05/94		**SU53** (U)	**SU50** (U)	
100	(44,44Q,C3)		08/82 → 11/90		**SU53** (U)	**SU50** (U)	
	(4A,C4)		12/90 → 07/94		**SU55** (U)	**SU55** (U)	
	(44,44Q,C3)	Avant	08/82 → 11/90		**SU53** (U)	**SU50** (U)	
	(4A,C4)	Avant	12/90 → 07/94		**SU55** (U)	**SU55** (U)	
200	(43)		08/79 → 07/83		**SU45** (U)	**SU45** (U)	
	(44)		08/83 → 12/91		**SU53** (U)	**SU50** (U)	
		Avant	08/84 → 12/91		**SU53** (U)	**SU50** (U)	
A1	(8X1)	3	09/10 →		**SC60** (3B)	**SC38** (3B)	**SB38** (3T)
	(8XA)	Sportback 5	02/12 →		**SC60** (3B)	**SC38** (3B)	**SB28** (3T)
A3	(8L1)		10/96 → 05/03		**SU53** (U)	**SU45** (U)	
	(8P1)		06/03 → 08/04		**SC60** (1B)	**SC48** (1B)	
		3	09/04 → 08/12		**SC60** (2A)	**SC48** (2A)	
	(8V1)	3	09/12 →		**SC65** (3B)	**SC45** (3B)	**SB33** (3T)
	(8VS)	4	09/13 →		**SC65** (3B)	**SC45** (3B)	
	(8PA)	Sportback 5	09/04 → 01/13		**SC60** (2A)	**SC48** (2A)	
	(8VA)	Sportback 5	02/13 →		**SC65** (3B)	**SC45** (3B)	**SB33** (3T)

3

For/Für			2	– SPOILER – HBLADE –			
AUDI (...)							
A3	(8P7)		04/08 → 01/14		**SC60** (2A)	**SC45** (2A)	
			02/14 →		**SC65** (3B)	**SC45** (3B)	
A4	(8D2,B5)		02/95 → 01/01		**SU53** (U)	**SU50** (U)	
	(8D5,B5)	Avant	02/95 → 09/01		**SU53** (U)	**SU50** (U)	
	(8KH,B8)	Allroad Quattro	05/09 → 06/16		**SC60** (3B)	**SC50** (3B)	**SB40** (3T)
	(8WH)	Allroad Quattro	07/16 →		**SC60** (3B)	**SC50** (3B)	**SB38** (3T)
A4 / S4 / RS4	(8K2)		01/08 → 10/15		**SC60** (3B)	**SC50** (3B)	
A4 / S4	(8W2)		11/15 →		**SC60** (3B)	**SC50** (3B)	
A4 / RS4	(8K5)	Avant	05/08 → 10/15		**SC60** (3B)	**SC50** (3B)	**SB40** (3T)
A4 / S4	(8W5)	Avant	11/15 →		**SC60** (3B)	**SC50** (3B)	**SB38** (3T)
A5 / S5	(8T3)		06/07 → 12/07		**SC60** (3A)	**SC50** (3A)	
	(F53)		11/16 →		**SC60** (3B)	**SC50** (3B)	
	(F57)		03/17 →		**SC60** (3B)	**SC50** (3B)	
A5 / S5 / RS5	(8T3)		01/08 →		**SC60** (3B)	**SC50** (3B)	
	(8F7)		05/09 →		**SC60** (3B)	**SC50** (3B)	
	(8TA)	Sportback	10/09 → 12/16		**SC60** (3B)	**SC50** (3B)	
	(F5A)	Sportback	01/17 →		**SC60** (3B)	**SC50** (3B)	
A6	(4A,4B,C4,C5)		01/95 → 05/01		**SU55** (U)	**SU53** (U)	
	(4A,CA)	Avant	01/95 → 03/97		**SU55** (U)	**SU53** (U)	
	(4B,C5)	Avant	04/97 → 09/01		**SU55** (U)	**SU53** (U)	
		Allroad	06/00 → 09/01		**SU55** (U)	**SU53** (U)	
	(4GH)	Allroad Quattro	04/12 →		**SC60** (3B)	**SC53** (3B)	**SB40** (3T)
A6 / S6	(4G2,C7)		04/11 →		**SC60** (3B)	**SC53** (3B)	
A6 / RS6	(4G5,C7)	Avant	09/11 →		**SC60** (3B)	**SC53** (3B)	**SB40** (3T)
A7 / S7 / RS7	(4GA,4GF)	Sportback	11/10 →		**SC60** (3B)	**SC53** (3B)	
Cabriolet	(8G7, B4)		06/91 → 03/98		**SU55** (U)	**SU55** (U)	
Coupe	(81, 85)	GT	09/80 → 07/83		**SU45** (U)	**SU45** (U)	
			08/83 → 10/88		**SU53** (U)	**SU50** (U)	
Quattro	(85)		10/80 → 07/83		**SU45** (U)	**SU45** (U)	
			08/83 → 07/91		**SU53** (U)	**SU50** (U)	
Q3	(8U)		10/11 →		**SC60** (3B)	**SC50** (3B)	**SB40** (3T)
Q5 / RSQ5	(8R)		11/08 →		**SC60** (3B)	**SC50** (3B)	**SB28** (3T)
Q7	(4L)		03/06 → 05/15		**SC65** (2A)	**SC65** (2A)	
	(8N3,8N9)		06/15 →		**SC65** (3B)	**SC50** (3B)	**SB38** (3T)
S6	(8N3,8N9)		06/96 → 12/99		**SU55** (U)	**SU53** (U)	
TT	(8J3,8J9)		03/03 → 08/06		**SC53** (1B)	**SC53** (1B)	
	(8N3,8N9)		03/03 → 10/06		**SC53** (1B)	**SC53** (1B)	
	(8J3,8J9)		09/06 → 09/14		**SC55** (2A)	**SC53** (2A)	
	(FV3)		10/14 →		**SC60** (3B)	**SC50** (3B)	
	(FV9)		03/15 →		**SC60** (3B)	**SC50** (3B)	
V8	(44_, 4C_)		08/87 → 07/91		**SU53** (U)	**SU50** (U)	
			08/91 → 11/93		**SU55** (U)	**SU53** (U)	
AUSTIN ROVER							
Maestro			01/85 →		**SU50** (U)	**SU50** (U)	
Metro			01/84 →		**SU40** (U)	**SU40** (U)	
Montego			05/84 → 1989		**SU50** (U)	**SU50** (U)	
			05/84 → 1989		**SU50** (U)	**SU50** (U)	
AUTOBIANCHI							
Y10		x1	09/84 →		**SU45** (U)		
BMW							
1-Series	(E81)		03/07 → 12/11		**SC50** (2A)	**SC50** (2A)	**SB28** (2R)
	(E87)		09/04 → 08/11		**SC50** (2A)	**SC50** (2A)	**SB28** (2R)
	(E82)		11/07 → 02/14		**SC50** (2A)	**SC50** (2A)	
	(E88)		03/08 → 01/15		**SC50** (2A)	**SC50** (2A)	
	(F21)		09/12 →		**SC55** (2A)	**SC45** (2A)	
	(F20)		09/11 →		**SC55** (2A)	**SC45** (2A)	
2-Series	(F22)		03/14 →		**SC55** (2A)	**SC45** (2A)	
	(F23)		02/15 →		**SC55** (2A)	**SC45** (2A)	
2-Series Active Tourer	(F45)		10/14 →		**SC65** (3A)	**SC48** (3A)	
2-Series Gran Tourer	(F46)		06/15 →		**SC65** (3A)	**SC48** (3A)	**SB28** (3T)
3-Series	(E21)		04/79 → 08/82		**SU45** (U)	**SU45** (U)	
	(E30)		09/82 → 03/91		**SU50** (U)	**SU50** (U)	
			09/82 → 03/91		**SU50** (U)	**SU50** (U)	
		Touring	09/82 → 01/95		**SU50** (U)	**SU50** (U)	
	(E36)		04/91 → 04/98		**SU53** (U)	**SU50** (U)	

For/Für				– SPOILER – – HBLADE –			
▶ BMW (...)							
3-Series	(E36)		04/91 → 02/99		**SU53** (U)	**SU50** (U)	
			04/91 → 03/00		**SU53** (U)	**SU50** (U)	
		Touring	02/95 → 10/99		**SU53** (U)	**SU50** (U)	
		Compact	02/94 → 02/96		**SU50** (U)	**SU50** (U)	
			03/96 → 06/01		**SU53** (U)		
	(E46)		05/98 → 02/05		**SU58** (U)	**SU50** (U)	
			03/99 → 09/06		**SU58** (U)	**SU50** (U)	
			04/00 → 09/06		**SU58** (U)	**SU50** (U)	
		Touring	11/99 → 08/05		**SU58** (U)	**SU50** (U)	
		Compact	07/01 →		**SU58** (U)	**SU50** (U)	
	(E90)		03/05 → 09/09		**SC60** (1B)	**SC48** (1B)	
			10/09 → 01/12		**SC60** (2A)	**SC48** (2A)	
	(E91)	Touring	09/05 → 09/09		**SC60** (1B)	**SC48** (1B)	
		Touring	10/09 → 08/12		**SC60** (2A)	**SC48** (2A)	
	(E92)		09/06 → 09/09		**SC60** (1B)	**SC40** (1B)	
	(E92)/(E93)		10/09 → 02/14		**SC60** (2A)	**SC40** (2A)	
	(E93)		01/07 → 09/09		**SC60** (1B)	**SC40** (1B)	
	(F30)		02/12 →		**SC60** (2A)	**SC48** (2A)	
	(F31)	Touring	09/12 →		**SC60** (2A)	**SC48** (2A)	
	(F34)	GT	06/13 →		**SC60** (2A)	**SC48** (2A)	
4-Series	(F32)		10/13 →		**SC60** (2A)	**SC45** (2A)	
	(F33)		03/14 →		**SC60** (2A)	**SC45** (2A)	
4-Series Gran Coupé	(F36)		06/14 →		**SC60** (2A)	**SC45** (2A)	
5-Series	(E12)		04/79 → 06/81		**SU45** (U)	**SU45** (U)	
	(E28)		07/81 → 12/87		**SU45** (U)	**SU45** (U)	
	(E60)		05/03 → 02/10		**SC60** (2A)	**SC58** (2A)	
	(E61)	Touring	04/04 → 08/10		**SC60** (2A)	**SC58** (2A)	
	(F07)	GT	11/09 →		**SC65** (1A)	**SC45** (1A)	
	(F10)		03/10 →		**SC65** (1A)	**SC45** (1A)	
	(F11)	Touring	09/10 →		**SC65** (1A)	**SC45** (1A)	
6-Series	(E24)		04/79 → 05/89		**SU45** (U)	**SU45** (U)	
	(E63)/(E64)		01/04 → 02/11		**SC58** (2A)	**SC60** (2A)	
	(F12)		03/11 →		**SC65** (1A)	**SC43** (1A)	
	(F13)		09/11 →		**SC65** (1A)	**SC43** (1A)	
6-Series Gran Coupé	(F06)		06/12 →		**SC65** (1A)	**SC43** (1A)	
7-Series	(E23)		04/79 → 08/86		**SU45** (U)	**SU45** (U)	
	(F01/ F02)		11/08 → 09/15		**SC65** (1A)	**SC45** (1A)	
2-Series M2	(F22)		03/14 →		**SC55** (2A)	**SC45** (2A)	
3-Series M3	(E30)		08/82 → 03/91		**SU50** (U)	**SU50** (U)	
	(E36)		04/91 → 11/00		**SU53** (U)	**SU50** (U)	
	(E90)		04/08 → 09/09		**SC60** (1B)	**SC48** (1B)	
			10/09 → 02/14		**SC60** (2A)	**SC48** (2A)	
	(E92)		09/07 → 09/09		**SC60** (1B)	**SC40** (1B)	
	(E92)/(E93)		10/09 → 02/14		**SC60** (2A)	**SC40** (2A)	
	(F80)		03/14 →		**SC60** (2A)	**SC48** (2A)	
4-Series M4	(F82)		03/14 →		**SC60** (2A)	**SC45** (2A)	
	(F83)		07/14 →		**SC60** (2A)	**SC45** (2A)	
5-Series M5	(E60)		01/05 → 02/10		**SC60** (2A)	**SC58** (2A)	
	(F10)		12/11 →		**SC65** (1A)	**SC45** (1A)	
6-Series M6	(E63)/(E64)		01/04 → 02/11		**SC58** (2A)	**SC60** (2A)	
5-Series M535i	(E12)		04/79 → 06/81		**SU45** (U)	**SU45** (U)	
	(E28)		06/81 → 12/87		**SU45** (U)	**SU45** (U)	
6-Series M635 Csi	(E24)		03/84 → 05/89		**SU45** (U)	**SU45** (U)	
X1	(E84)		10/09 → 09/15		**SC60** (2A)	**SC45** (2A)	**SB33** (2R)
	(F48)		10/15 →		**SC65** (3B)	**SC40** (3B)	**SB33** (3T)
X3	(E83)		01/04 → 10/10		**SU55** (U)	**SU50** (U)	
	(F25)		11/10 →		**SC65** (1B)	**SC50** (1B)	**SB33**
X4	(F26)		07/14 →		**SC65** (1B)	**SC50** (1B)	
X5	(E70)		03/07 → 09/11		**SC60** (1B)	**SC50** (1B)	**SB38**
			10/11 → 10/13		**SC60** (3A)	**SC50** (3A)	**SB38**
X6	(E71)		05/08 → 09/11		**SC60** (1B)	**SC50** (1B)	
			10/11 → 07/14		**SC60** (3A)	**SC50** (3A)	
Z1			11/88 → 1991		**SU50** (U)	**SU50** (U)	
Z3	(E36)		03/96 →		**SU50** (U)	**SU50** (U)	
Z4	(E85)		03/03 → 04/09		**SU50** (U)	**SU50** (U)	
	(E89)		05/09 →		**SU53** (U)	**SU50** (U)	

For/Für				SPOILER HBLADE			
CADILLAC							
Escalade			01/11 →		SU55 (U)	SU55 (U)	
CHEVROLET							
Aveo	1	3	05/08 → 01/12		SU55 (U)	SU40 (U)	
		4	03/06 → 01/11		SU55 (U)	SU40 (U)	
		5	03/06 → 01/11		SU55 (U)	SU40 (U)	
	2	4	06/11 →		SC65 (2A)	SC35 (2A)	
		5	04/11 →		SC65 (2A)	SC35 (2A)	
Camaro			01/09 → 05/16		SU60 (U)	SU53 (U)	
			09/11 → 05/16		SU60 (U)	SU53 (U)	
Captiva			09/06 →		SU60 (U)	SU40 (U)	
Cruze		4	05/09 →		SU60 (U)	SU45 (U)	
		5	09/11 →		SU60 (U)	SU45 (U)	
		SW	09/12 →		SU60 (U)	SU45 (U)	
Epica			07/06 →		SU55 (U)	SU50 (U)	
Kalos			03/05 → 06/08		SU55 (U)	SU40 (U)	
Lacetti			03/05 →		SU55 (U)	SU45 (U)	
Malibu			09/12 →		SU60 (U)	SU48 (U)	
Matiz			03/05 →		SU55 (U)	SU35 (U)	
Nubira			03/05 →		SU55 (U)	SU45 (U)	
		SW	03/05 →		SU55 (U)	SU45 (U)	
Rezzo / Tacuma			03/05 →		SU60 (U)	SU45 (U)	
Spark			03/10 →		SU55 (U)	SU35 (U)	
Suburban			01/07 → 12/07		SC55 (2A)	SC55 (2A)	
Tahoe			01/07 → 12/07		SC55 (2A)	SC55 (2A)	
Tracker	2		1999 → 02/13		SU45 (U)	SU45 (U)	
	3		03/13 →		SC65 (3A)	SC35 (3A)	
Trafic			1997 → 2002		SU50 (U)	SU50 (U)	
Trax			03/13 →		SC65 (3A)	SC35 (3A)	
Volt			01/11 →		SC65 (3A)	SC65B (3A)	
CHRYSLER							
300 C		4	03/04 →		SU55 (U)	SU55 (U)	
			03/04 →		SU55 (U)	SU55 (U)	
300 M			03/98 →		SU60 (U)	SU55 (U)	
Crossfire			03/03 →		SU50 (U)	SU53 (U)	
Neon			06/94 → 10/99		SU53 (U)	SU45 (U)	
			11/99 →		SU55 (U)	SU48 (U)	
New-Yorker					SU60 (U)	SU60 (U)	
PT Cruiser		5	06/00 →		SU50 (U)	SU53 (U)	
			03/04 →		SU50 (U)	SU53 (U)	
Sebring		4	04/01 → 2006		SU55 (U)	SU55 (U)	
			03/07 →		SU60 (U)		
			04/01 → 2006		SU55 (U)	SU55 (U)	
			10/07 →		SU60 (U)		
Stratus		4			SU55 (U)	SU55 (U)	
					SU55 (U)	SU55 (U)	
Viper			12/93 →		SU40 (U)	SU40 (U)	
Voyager	2		1991 → 03/96		SU55 (U)	SU45 (U)	
	3		03/96 → 02/01		SU70 (U)	SU65B (U)	
Voyager / Grand Voyager	4		04/01 → 03/08		SU70 (U)	SU65B (U)	
	5		04/08 →		SU60 (U)	SU50 (U)	
CITROËN							
AX		x1	1986 → 07/98		SU55 (U)		
Axel		x1	1984 → 1989		SU48 (U)		
Berlingo / Berlingo First			06/96 →		SU55 (U)	SU55 (U)	
Berlingo Multispace			01/97 → 05/08		SU55 (U)	SU55 (U)	
Berlingo	2		05/08 →		SC65 (3A)	SC40 (3A)	
BX		5 x1	10/82 →		SU50 (U)		
		x1	10/82 →		SU50 (U)		
C1		x1	06/05 → 05/14		SU65C (M1)		
			06/14 →		SC65 (2A)		
C15		x1			SU48 (U)		
C22/ C25/ C32/ C35					SU50 (U)	SU50 (U)	
C2			09/03 →		SU60 (U)	SU45 (U)	
C3	1	~~Pluriel~~ 5	04/02 → 10/09		SU60 (U)	SU45 (U)	
	2	~~Picasso~~ 5	11/09 →		SC60 (4C)	SC40 (4C)	

3

For/Für				– SPOILER – HBLADE –			
CITROËN (...)							
C3 Classic			11/09 → 01/11		SU60 (U)	SU45 (U)	
C3 Picasso			03/09 → 04/10		SC60 (3A)	SC40 (3A)	
			05/10 →		SC60 (4C)	SC40 (4C)	
C3 Pluriel			04/03 →		SU55 (U)	SU45 (U)	
C4		Picasso	11/04 → 09/10		SC70 (2A)	SC60B (2A)	
			10/10 →		SC75 (3A)	SC65B (3A)	
			11/04 → 09/10		SC70 (2A)	SC60B (2A)	
C4 Aircross			04/12 →		SU60 (U)	SU53 (U)	
C4 Picasso			10/06 → 05/08		SC80 (1B)	SC75B (1B)	
			06/08 → 05/13		SC80 (4C)	SC75B (4C)	
			06/13 →		SC80 (3A)	SC75B (3A)	
C5	1		03/01 → 11/03		SU65 (U)	SU45 (U)	
			12/03 → 08/04		SC65 (1B)	SC45 (1B)	
			09/04 → 03/08		SC65 (1B)		SB40
			07/01 → 11/03		SU65 (U)	SU45 (U)	
			12/03 → 04/08		SC65 (1B)	SC45 (1B)	
	2		04/08 →		SC70 (2A)	SC55B (2A)	
C5 Tourer / Cross Tourer	2	Tourer	05/08 →		SC70 (2A)	SC55B (2A)	SB24
C6			10/05 →		SC70 (1B)	SC70B (1B)	
C-Crosser			07/07 → 12/12		SU60 (U)	SU53 (U)	
C-Elysée			11/12 →		SC60 (4C)	SC40 (4C)	
C-Zero		x1	01/11 →		SU65 (U)		
CX		x1	1974 →		SU60 (U)		
		x1	1974 →		SU60 (U)		
DS3			03/10 →		SC60 (4C)	SC40 (4C)	
DS3 Cabrio			01/13 →		SC60 (4C)	SC40 (4C)	
DS4			05/11 →		SC75 (3A)	SC65B (3A)	
DS5			11/11 →		SC75 (3A)	SC65B (3A)	
Evasion			06/94 → 05/02		SU65C (U)	SU50 (U)	
Grand C4 Picasso			10/13 →		SC80 (3A)	SC75B (3A)	
Jumper	1		02/94 → 06/06		SU50 (U)	SU50 (U)	
	2		07/06 →		SC65 (3A)	SC55 (3A)	
Jumpy			10/95 → 12/06		SU65C (U)	SU50 (U)	
Jumpy / Atlante	2		01/07 → 05/16		SU65 (U)	SU50 (U)	
			01/07 → 05/16		SU65 (U)	SU50 (U)	
Jumpy			06/16 →		SC65 (4C)	SC50 (4C)	
			06/16 →		SC65 (4C)	SC50 (4C)	
Némo / Combi			02/08 →		SC65 (4C)	SC45 (4C)	
SpaceTourer			06/16 →		SC65 (4C)	SC50 (4C)	
			06/16 →		SC65 (4C)	SC50 (4C)	
Xantia			03/93 →		SU60 (U)	SU48 (U)	
			07/95 → 11/99		SU60 (U)	SU48 (U)	
XM			04/89 →		SU55 (U)	SU55 (U)	
			09/91 →		SU55 (U)	SU55 (U)	
Xsara			09/97 → 11/04		SU55 (U)	SU50 (U)	
			01/98 → 11/04		SU55 (U)	SU50 (U)	
			03/98 →		SU55 (U)	SU50 (U)	
Xsara Picasso			09/05 → 09/10		SC65 (1B)	SC65B (1B)	
ZX		x1	03/91 →		SU55 (U)		
		x1	11/93 →		SU55 (U)		
DACIA							
Dokker / Dokker Stepway			09/12 → 11/15		SU55 (U)	SU40 (U)	
Dokker Pick up			10/12 → 11/15		SU55 (U)	SU40 (U)	
Dokker Van			10/12 → 11/15		SU55 (U)	SU40 (U)	
Duster			04/10 → 10/14		SU50 (U)	SU50 (U)	
Lodgy / Lodgy Stepway			04/12 → 10/15		SU55 (U)	SU40 (U)	
Logan	2		12/12 → 02/15		SU55 (U)	SU50 (U)	
			03/15 →		SC55 (4C)	SC45 (4C)	
		MCV	09/13 → 02/15		SU55 (U)	SU50 (U)	
			03/15 →		SC55 (4C)	SC45 (4C)	
Sandero / Stepway	1		06/08 → 11/12		SU50 (U)	SU50 (U)	
	2		12/12 → 02/15		SU55 (U)	SU50 (U)	
			03/15 →		SC55 (4C)	SC45 (4C)	
DAEWOO							
Espero			09/93 →		SU48 (U)	SU48 (U)	
Evanda			04/03 →		SU55 (U)	SU50 (U)	

For/Für			2 3	– SPOILER – HBLADE –			
DAEWOO (...)							
Kalos			09/02 →		SU55 (U)	SU40 (U)	
Korando			10/96 →		SU45 (U)	SU45 (U)	
Lacetti			02/04 →		SU55 (U)	SU48 (U)	
Lanos		3 5	1997 → 02/04		SU48 (U)	SU48 (U)	
		4	1997 → 02/04		SU48 (U)	SU48 (U)	
Leganza			1997 → 04/03		SU55 (U)	SU48 (U)	
Matiz			09/98 → 02/05		SU53 (U)	SU40 (U)	
Musso			10/94 →		SU50 (U)	SU45 (U)	
Nexia		3 5	03/95 → 1999		SU45 (U)	SU45 (U)	
		4	03/95 → 1999		SU45 (U)	SU45 (U)	
Nubira	1/ -2	4	1997 → 05/03		SU50 (U)	SU50 (U)	
		5	1997 → 05/03		SU50 (U)	SU50 (U)	
			1997 → 12/04		SU50 (U)	SU50 (U)	
	3	4	06/03 →		SU55 (U)	SU45 (U)	
		SW	01/05 →		SU55 (U)	SU45 (U)	
Tacuma			04/00 →		SU60 (U)	SU45 (U)	
Rezzo			10/00 →		SU60 (U)	SU45 (U)	
DAIHATSU							
Charade		3 5	1993 →		SU48 (U)	SU45 (U)	
		4	1993 →		SU48 (U)	SU45 (U)	
Cuore	(L201)		1991 → 10/03		SU45 (U)	SU40 (U)	
Extol					SU48 (U)	SU40 (U)	
Materia			01/07 →		SU50 (U)	SU45 (U)	
Sirion		5	→ 09/04		SU45 (U)	SU45 (U)	
			02/05 → 2013		SU50 (U)	SU40 (U)	
Terios			1998 → 04/06		SU50 (U)	SU35 (U)	
			05/06 → 2013		SU53 (U)	SU45 (U)	
Trevis		5	10/06 →		SU50 (U)	SU40 (U)	
YRV			01/01 →		SU53 (U)	SU35 (U)	
DODGE							
Avenger			09/07 → 01/11		SU60 (U)	SU55 (U)	
Caliber			06/06 → 01/12		SU60 (U)	SU40 (U)	
Challenger			01/10 →		SU55 (U)	SU55 (U)	
Journey			06/08 → 01/12		SU60 (U)	SU45 (U)	
Nitro			03/07 → 01/12		SU48 (U)	SU48 (U)	
RAM 1500			2009 →		SU55 (U)	SU55 (U)	
DS							
DS 3		3	03/10 →		SC60 (4C)	SC40 (4C)	
DS 3 Cabrio			01/13 →		SC60 (4C)	SC40 (4C)	
DS 4			05/11 →		SC75 (3A)	SC65B (3A)	
DS 4 Crossback			11/15 →		SC75 (3A)	SC65B (3A)	
DS5			11/11 →		SC75 (3A)	SC65B (3A)	
FIAT							
124	Spider		06/16 →		SU45 (U)	SU48 (U)	
500	Abarth	3	07/07 →		SC60 (3A)	SC35 (3A)	
500 C			06/09 →		SC60 (3A)	SC35 (3A)	
500 L / Trekking		5	10/12 →		SC65 (3A)	SC38 (3A)	
500 L Living		5	09/13 →		SC65 (3A)	SC38 (3A)	
500 X			02/15 →		SC65 (3A)	SC35 (3A)	
AEgea		4	11/15 →		SC65 (3A)	SC40 (3A)	
		5	06/16 →		SC65 (3A)	SC40 (3A)	
Barchetta			05/95 →		SU48 (U)	SU48 (U)	
Brava			09/95 → 10/01		SU55 (U)	SU48 (U)	
Bravo			09/95 → 10/01		SU55 (U)	SU48 (U)	
			03/07 → 12/14		SC60 (3A)	SC43 (3A)	
Cinquecento			06/92 →		SU48 (U)	SU48 (U)	
Coupe			11/93 →		SU53 (U)	SU48 (U)	
Croma			10/85 →		SU50 (U)	SU50 (U)	
	2		10/05 → 01/11		SC60 (1B)	SC43 (1B)	
Doblo			03/01 → 12/09		SU55 (U)	SU45 (U)	
			01/10 →		SC60 (3A)	SC40 (3A)	SB40 (2R)
Ducato			1982 → 01/94		SU50 (U)	SU50 (U)	
			02/94 → 06/06		SU55 (U)	SU55 (U)	
			07/06 →		SC65 (3A)	SC55 (3A)	
Duna		x1	08/91 → 2000		SU45 (U)		

For/Für				SPOILER – HBLADE –			
FIAT (...)							
Elba		x1	06/91 → 1997		**SU45** (U)		
Fiorino		x1	1988 → 09/00		**SU45** (U)		
Fiorino / Qubo			02/08 →		**SC65** (4C)	**SC45** (4C)	
Freemont			06/11 →		**SU60** (U)	**SU48** (U)	
Fullback			05/16 →		**SU55** (U)	**SU45** (U)	
Grande Punto	3	3 5	11/05 →		**SC65** (2A)	**SC38** (2A)	
Idea		3 5	01/04 → 03/08		**SU55** (U)	**SU35** (U)	
			04/08 → 01/12		**SC55** (3A)	**SC35** (3A)	
Linea			07/07 → 10/15		**SC65** (2A)	**SC38** (2A)	
Marea		4	09/96 →		**SU55** (U)	**SU48** (U)	
		Week-End	09/96 →		**SU55** (U)	**SU48** (U)	
Multipla			05/06 → 06/10		**SC60** (2A)	**SC53** (2A)	
Palio			10/97 →		**SU55** (U)	**SU45** (U)	
		Week-End	10/97 →		**SU55** (U)	**SU45** (U)	
Panda / 4X4			09/03 → 12/11		**SU55** (U)	**SU40** (U)	
Panda	3		03/12 →		**SC60** (3A)	**SC38** (3A)	
Panda 4X4 / Trekking	3		10/12 →		**SC60** (3A)	**SC38** (3A)	
Premio		x1	1987 → 2000		**SU45** (U)		
Punto	1	3 5	03/93 → 09/99		**SU55** (U)	**SU40** (U)	
			03/94 →		**SU55** (U)	**SU40** (U)	
	2	3 5	10/99 → 10/09		**SU53** (U)	**SU45** (U)	
		HGT	10/99 → 11/06		**SU53** (U)	**SU45** (U)	
Punto / Evo / Abarth		3 5	10/09 →		**SC65** (2A)	**SC38** (2A)	
Scudo			10/95 → 12/06		**SU65C** (U)	**SU50** (U)	
Scudo / Combi / Panorama			01/07 → 06/16		**SU65** (U)	**SU50** (U)	
			01/07 → 06/16		**SU65** (U)	**SU50** (U)	
Seicento			03/98 → 08/05		**SU48** (U)	**SU48** (U)	
Sedici			04/06 →		**SU65C** (U)	**SU35** (U)	
Siena			01/01 → 2012		**SU55** (U)	**SU45** (U)	
Stilo		3 5	11/01 → 05/06		**SU53** (U)	**SU45** (U)	
			06/06 → 06/07		**SC55** (2A)	**SC45** (2A)	
			01/03 → 05/06		**SU53** (U)	**SU45** (U)	
			06/06 → 06/07		**SC55** (2A)	**SC45** (2A)	
Strada			05/00 →		**SU55** (U)	**SU45** (U)	
Talento			09/91 → 09/95		**SU50** (U)	**SU50** (U)	
			06/16 →		**SC65** (3A)	**SC48** (3A)	
			06/16 →		**SC65** (3A)	**SC48** (3A)	
Tipo			10/88 → 02/93		**SU48** (U)	**SU48** (U)	
		4	11/15 →		**SC65** (3A)	**SC40** (3A)	
		5	05/16 →		**SC65** (3A)	**SC40** (3A)	
			09/16 →		**SC65** (3A)	**SC40** (3A)	
Ulysse			06/94 → 05/02		**SU65C** (U)	**SU50** (U)	
Uno		x1	01/83 → 07/92		**SU45** (U)		
FORD							
B-Max			09/12 →		**SC75** (2A)	**SC65B** (2A)	
C-Max			10/10 →		**SC70** (2A)	**SC60B** (2A)	
Cougar			10/98 → 08/01		**SU55** (U)	**SU50** (U)	
Escort	3		08/80 → 07/86		**SU45** (U)	**SU45** (U)	
			08/80 → 07/86		**SU45** (U)	**SU45** (U)	
	4		08/86 → 08/90		**SU45** (U)	**SU45** (U)	
		Clipper	08/86 → 08/90		**SU45** (U)	**SU45** (U)	
			08/86 → 08/90		**SU45** (U)	**SU45** (U)	
	5	3 5	09/90 → 08/00		**SU50** (U)	**SU50** (U)	
			09/90 → 01/99		**SU50** (U)	**SU50** (U)	
		Clipper	09/90 → 08/00		**SU50** (U)	**SU50** (U)	
		Van	09/90 → 12/03		**SU50** (U)	**SU50** (U)	
Explorer			01/91 → 2001		**SU45** (U)	**SU45** (U)	
			2001 →		**SU55** (U)	**SU55** (U)	
F 150			2015 →		**SU55** (U)	**SU55** (U)	
Fiesta	3		03/89 → 09/95		**SU48** (U)	**SU48** (U)	
	4		10/95 → 04/02		**SU48** (U)	**SU48** (U)	
	5		05/02 → 10/08		**SU55** (U)	**SU40** (U)	
	6		10/08 → 08/10		**SC65** (3A)	**SC38** (3A)	
			09/10 →		**SC65** (3A)	**SC40** (3A)	
	Classic		10/95 → 04/02		**SU48** (U)	**SU48** (U)	
	Courrier		07/91 → 2002		**SU48** (U)	**SU48** (U)	

For/Für				SPOILER – HBLADE –			
FORD (...)							
Focus	1	C-Max 3 5	10/98 → 09/04		**SU55** (U)	**SU48** (U)	
		4	10/98 → 02/05		**SU55** (U)	**SU48** (U)	
			10/98 → 02/05		**SU55** (U)	**SU48** (U)	
	2	C-Max 3 5	10/04 → 08/05		**SC65** (1B)	**SC43** (1B)	
		C-Max 3	09/05 → 02/11		**SC65** (1B)	**SC43** (1B)	
		C-Max 5	09/05 → 02/11		**SC65** (1B)	**SC43** (1B)	
		C-Max 4	03/05 → 03/11		**SC65** (1B)	**SC43** (1B)	
		C-Max	03/05 → 03/11		**SC65** (1B)	**SC43** (1B)	
			09/06 → 03/11		**SC65** (1B)	**SC43** (1B)	
	C-Max		09/03 → 09/10		**SC65** (1B)	**SC48** (1B)	
Fusion			10/02 → 02/12		**SU55** (U)	**SU40** (U)	
Galaxy	1		06/01 → 04/06		**SC70** (1B)	**SC70B** (1B)	
	2		06/06 → 11/15		**SC75** (3A)	**SC65B** (3A)	
	3		12/15 →		**SC75** (2A)	**SC75B** (2A)	**SB33**
Grand C-Max			10/10 →		**SC70** (2A)	**SC60B** (2A)	
KA	2		11/08 → 10/10		**SU60** (U)	**SU35** (U)	
			11/10 →		**SC60** (3A)	**SC35** (3A)	
KA +		5	09/16 →		**SC55** (3A)	**SC40** (3A)	
Kuga	1		06/08 → 12/12		**SC60** (3A)	**SC43** (3A)	
	2		01/13 →		**SC70** (2A)	**SC70B** (2A)	**SB28**
Maverick			1993 → 05/01		**SU55** (U)	**SU50** (U)	
			06/01 → 12/06		**SU48** (U)	**SU48** (U)	
Mercury			01/94 →		**SU55** (U)	**SU55** (U)	
Mondeo	1		01/93 → 09/96		**SU53** (U)	**SU50** (U)	
		4	10/96 → 12/00		**SU53** (U)	**SU50** (U)	
		5	10/96 → 12/00		**SU53** (U)	**SU50** (U)	
		Clipper	01/93 → 12/00		**SU53** (U)	**SU50** (U)	
	2	4	01/01 → 05/07		**SU55** (U)	**SU50** (U)	
		5	01/01 → 05/07		**SU55** (U)	**SU50** (U)	
		Clipper	01/01 → 05/07		**SU55** (U)	**SU50** (U)	
	3	4	06/07 → 11/14		**SC65** (3A)	**SC48** (3A)	
		5	06/07 → 11/14		**SC65** (3A)	**SC48** (3A)	
		SW	06/07 → 11/14		**SC65** (3A)	**SC48** (3A)	
Mustang			01/04 → 12/12		**SU55** (U)	**SU50** (U)	
			12/13 →		**SC55** (2A)	**SC50** (2A)	
Orion	1		09/83 → 08/90		**SU45** (U)	**SU45** (U)	
	2		09/90 → 01/94		**SU50** (U)	**SU50** (U)	
Probe			01/94 → 09/98		**SU50** (U)	**SU50** (U)	
Puma			03/97 → 09/02		**SU48** (U)	**SU48** (U)	
Ranger		Pick Up	01/97 → 12/11		**SU45** (U)	**SU45** (U)	
		~~Pick-up~~	09/01 → 12/11		**SU55** (U)	**SU55** (U)	
Ranger / Wildtrak			03/12 → 01/16		**SU60** (U)	**SU40** (U)	
			02/16 →		**SC60** (3A)	**SC40** (3A)	
Scorpio			03/85 → 09/98		**SU50** (U)	**SU50** (U)	
			02/92 → 09/98		**SU50** (U)	**SU50** (U)	
Sierra			08/82 → 02/93		**SU50** (U)	**SU50** (U)	
			08/82 → 02/93		**SU50** (U)	**SU50** (U)	
StreetKa			01/03 → 12/05		**SU48** (U)	**SU45** (U)	
S-Max			05/06 → 08/15		**SC75** (3A)	**SC65B** (3A)	
	2		09/15 →		**SC75** (2A)	**SC75B** (2A)	**SB33**
Taunus			09/79 → 08/82		**SU45** (U)	**SU45** (U)	
			09/79 → 08/82		**SU45** (U)	**SU45** (U)	
Tourneo			10/94 → 12/12		**SU55** (U)	**SU55** (U)	
Tourneo / Transit	Connect		01/03 → 11/13		**SU55** (U)	**SU50** (U)	
			12/13 →		**SC75** (2A)	**SC75B** (2A)	
			12/13 →		**SC75** (2B)	**SC75B** (2B)	
	Custom		12/12 →		**SC75** (3A)	**SC70B** (3A)	
Tourneo	Courier		06/14 →		**SC70** (2A)	**SC38** (2A)	
Transit	2		06/78 → 10/85		**SU50** (U)	**SU50** (U)	
	3/ -4/ -5		11/85 → 10/00		**SU55** (U)	**SU55** (U)	
	Compact		09/96 → 10/00		**SU55** (U)	**SU55** (U)	
	2000		11/00 → 08/09		**SU65** (U)	**SU60** (U)	
			09/09 → 04/14		**SU65** (U)	**SU53** (U)	
	Custom / Kombi		12/12 →		**SC75** (3A)	**SC70B** (3A)	
			12/12 →		**SC75** (3A)	**SC70B** (3A)	
	Connect		12/13 →		**SC75** (2A)	**SC75B** (2A)	
			12/13 →		**SC75** (2A)	**SC75B** (2A)	

For/Für				SPOILER – HBLADE –			
FORD (...)							
Transit	Courier		06/14 →		SC70 (2A)	SC38 (2A)	
			06/14 →		SC70 (2A)	SC38 (2A)	
	(Fourgon 2T)		05/14 →		SC75 (3A)	SC50 (3A)	
Windstar			03/96 → 2003		SU60 (U)	SU50 (U)	
FSO							
ATU			01/96 →		SU50 (U)	SU50 (U)	
Caro			1992 →		SU50 (U)	SU50 (U)	
GMC							
Denali / Denali XL			01/07 → 12/07		SC55 (2A)	SC55 (2A)	
Yukon / Yukon XL			01/07 → 12/07		SC55 (2A)	SC55 (2A)	
HONDA							
Accord	3		10/85 → 09/89		SU45 (U)	SU45 (U)	
	4		10/89 → 06/92		SU55 (U)	SU48 (U)	
			10/89 → 08/93		SU55 (U)	SU48 (U)	
	5 / -6	4	07/92 → 09/98		SU55 (U)	SU50 (U)	
	7	4	10/98 → 12/02		SU55 (U)	SU48 (U)	
	8	4	01/03 → 02/06		SU65 (U)	SU40 (U)	
		5	11/99 → 03/06		SU55 (U)	SU48 (U)	
		Tourer	04/03 → 03/06		SU65 (U)	SU40 (U)	
	9	4	06/08 → 12/15		SU60 (U)	SU53 (U)	
		Tourer	06/08 → 12/15		SU60 (U)	SU53 (U)	
Civic	3	Shuttle	09/83 → 08/87		SU45 (U)	SU45 (U)	
	4		09/87 → 08/91		SU48 (U)	SU45 (U)	
		Shuttle	09/87 → 08/91		SU48 (U)	SU48 (U)	
	4 / -5		09/91 → 12/94		SU50 (U)	SU45 (U)	
	6	3	01/95 → 08/01		SU50 (U)	SU45 (U)	
		4	01/95 → 03/01		SU50 (U)	SU45 (U)	
		5	01/95 → 03/01		SU50 (U)	SU45 (U)	
			01/95 → 08/01		SU50 (U)	SU45 (U)	
		Aerodeck	03/98 → 03/01		SU50 (U)	SU45 (U)	
	7	3	09/01 → 12/06		SU60 (U)	SU35 (U)	
		5	04/01 → 12/05		SU60 (U)	SU35 (U)	
	8	Hybrid 4	03/08 →		SU65 (U)	SU55B (U)	
	9	5	02/12 →		SU65 (U)	SU45 (U)	
		Tourer	01/14 →		SU65 (U)	SU45 (U)	
Concerto			09/88 → 06/97		SU45 (U)	SU45 (U)	
CR-V			03/97 → 03/02		SU48 (U)	SU48 (U)	
			04/02 → 12/06		SU53 (U)	SU50 (U)	
			01/07 →		SU65 (U)	SU40 (U)	
CRX			09/91 → 12/99		SU50 (U)	SU45 (U)	
CR-Z			05/10 → 12/14		SU65C (U)	SU50 (U)	
FR-V			12/04 → 12/10		SU65C (U)	SU45 (U)	
HR-V		3	03/99 → 12/03		SU50 (U)	SU40 (U)	
		5	01/00 → 11/05		SU50 (U)	SU40 (U)	
			09/15 →		SU65 (U)	SU45 (U)	
Insight	1		1999 → 2008		SU50 (U)	SU45 (U)	
	2		04/09 → 12/14		SU65C (U)	SU40 (U)	
Integra			03/85 → 02/90		SU45 (U)	SU45 (U)	
	Type R		09/97 → 09/01		SU50 (U)	SU45 (U)	
Jazz			01/02 → 10/08		SU50 (U)		
			11/08 → 09/15		SU65C (U)	SU35 (U)	
			10/15 →		SU65 (U)		
Legend			09/87 → 08/90		SU45 (U)	SU45 (U)	
			09/87 → 08/90		SU45 (U)	SU45 (U)	
Logo			03/99 → 12/01		SU50 (U)	SU40 (U)	
NSX			03/89 → 04/05		SU50 (U)	SU50 (U)	
Prelude			04/87 → 09/91		SU48 (U)	SU45 (U)	
			10/91 → 12/96		SU50 (U)	SU48 (U)	
			01/97 → 09/01		SU50 (U)	SU45 (U)	
S 2000			12/99 → 10/09		SU50 (U)	SU40 (U)	
Shuttle			1995 → 2004		SU55 (U)	SU55 (U)	
Stream			06/01 → 09/05		SU60 (U)	SU35 (U)	
HUMMER							
H2			2004 →		SU40 (U)	SU40 (U)	
H3			01/06 →		SU40 (U)	SU40 (U)	

For/Für				SPOILER – HBLADE			
HUMMER (...)							
H3-T			2006 →		SU40 (U)	SU40 (U)	
HYUNDAI							
Accent		3 5	07/94 → 12/06		SU50 (U)	SU45 (U)	
		4	07/94 → 11/99		SU50 (U)	SU45 (U)	
			07/94 → 11/99		SU50 (U)	SU45 (U)	
Atos			09/97 → 03/08		SU50 (U)	SU40 (U)	
Coupe	GSI		1990 → 03/96		SU48 (U)	SU45 (U)	
			09/96 → 10/10		SU55 (U)	SU45 (U)	
Elantra		4	11/00 → 12/06		SU50 (U)	SU45 (U)	
		5	11/00 → 12/06		SU50 (U)	SU45 (U)	
Galloper			03/98 → 03/02		SU40 (U)	SU40 (U)	
Grandeur			05/06 → 11/09		SU60 (U)	SU50 (U)	
Grand Santa Fe	3		09/13 →		SU65 (U)	SU35 (U)	
H100			07/93 → 2007		SU45 (U)	SU45 (U)	
H300			12/07 →		SU60 (U)	SU50 (U)	
i 10			04/08 → 11/13		SU55 (U)	SU35 (U)	
			12/13 →		SU55 (U)	SU40 (U)	
i 20		5	11/14 →		SU60 (U)	SU40 (U)	
i 20 Active		5	10/15 →		SU60 (U)	SU40 (U)	
i 20			04/15 →		SU60 (U)	SU40 (U)	
i 30			09/10 → 02/12		SU60 (U)	SU45 (U)	
		3 5	06/07 → 2011		SC60 (3A)	SC45 (3A)	
		3	12/12 →		SU65C (U)	SU35 (U)	
		5	03/12 →		SU65C (U)	SU35 (U)	
		CW	12/07 → 2011		SC60 (3A)	SC45 (3A)	
		CW	09/10 → 06/12		SU60 (U)	SU45 (U)	
		CW	07/12 →		SU65C (U)	SU35 (U)	
i 40			02/12 →		SU65C (U)	SU40 (U)	
		CW	06/11 →		SU65C (U)	SU40 (U)	
i 800			05/08 →		SU60 (U)	SU50 (U)	
Ioniq			10/16 →		SU65C (U)	SU45 (U)	
ix 20			10/10 →		SC65 (3A)	SC35 (3A)	
Lantra	1		12/90 → 05/95		SU50 (U)	SU48 (U)	
	2		06/95 → 10/00		SU50 (U)	SU45 (U)	
			09/95 → 10/00		SU50 (U)	SU45 (U)	
Matrix			10/01 → 10/10		SU55 (U)	SU40 (U)	
Pony			10/89 → 06/94		SU45 (U)	SU45 (U)	
		3 5	07/94 → 01/00		SU50 (U)	SU45 (U)	
		4	07/94 → 01/00		SU50 (U)	SU45 (U)	
			10/89 → 06/94		SU45 (U)	SU45 (U)	
Santa Fe	1		10/00 → 03/06		SU55 (U)	SU50 (U)	
	2		04/06 → 08/12		SU60 (U)	SU45 (U)	
	3		09/12 →		SU65 (U)	SU35 (U)	
Satellite			03/98 → 11/07		SU65C (U)	SU50 (U)	
	H1		12/07 →		SU60 (U)	SU50 (U)	
Scoupe			03/90 → 12/95		SU48 (U)	SU45 (U)	
Sonata	1		11/88 → 08/93		SU50 (U)	SU45 (U)	
	2		09/93 → 08/98		SU50 (U)	SU50 (U)	
	3		09/98 → 08/04		SU55 (U)	SU50 (U)	
	4		03/05 → 2011		SU60 (U)	SU50 (U)	
Starex	H1		09/97 → 11/07		SU65C (U)	SU50 (U)	
			12/07 →		SU60 (U)		
Terracan			12/01 → 2007		SU55 (U)	SU50 (U)	
Tucson			08/04 → 04/09		SU60 (U)	SU40 (U)	
			09/15 →		SU65 (U)		
XG			08/99 → 12/05		SU55 (U)	SU50 (U)	
INFINITI							
M 30 / 35h			01/11 →		SU65 (U)	SU45 (U)	
Q 30		5	09/15 →		SC60 (2A)	SC48 (2A)	
Q 50		4	06/13 →		SU65 (U)	SU40 (U)	
Q 60			07/16 →		SU65 (U)	SU40 (U)	
			10/13 →		SU65 (U)	SU40 (U)	
QX 30		5	06/16 →		SC60 (2A)	SC48 (2A)	
INNOCENTI							
Mini	900		1986 →		SU45 (U)	SU45 (U)	

For/Für				– SPOILER – – HBLADE –			
ISUZU							
Amigo			09/91 →		SU48 (U)	SU48 (U)	
Campo			1990 →		SU45 (U)	SU45 (U)	
D-Max / Rodeo			05/04 →		SU55 (U)	SU45 (U)	
TFR54			1990 →		SU45 (U)	SU45 (U)	
Trooper			1999 →		SU50 (U)	SU50 (U)	
Trooper Magic			1989 →		SU40 (U)	SU40 (U)	
IVECO							
Daily	2		06/14 →		SC60 (2A)	SC60 (2A)	
JAGUAR							
F-Pace			05/16 →		SC65 (3A)	SC48 (3A)	
F-Type			01/14 →		SU55 (U)	SU53 (U)	
			06/13 →		SU55 (U)	SU53 (U)	
S-Type			02/99 → 09/01		SU55 (U)	SU53 (U)	
XE / XE R		4	06/15 →		SC70 (3A)	SC43 (3A)	
XF / XF R			03/08 → 09/15		SC58 (2A)	SC45 (2A)	
XF Sportbrake			01/13 → 09/15		SC58 (2A)	SC45 (2A)	
XJ Series	XJR		05/10 →		SC58 (2A)	SC45 (2A)	
XK Series	XK / XKR		03/06 → 09/14		SU55 (U)	SU53 (U)	
	XK		03/06 → 09/14		SU55 (U)	SU53 (U)	
JEEP							
Cherokee			04/97 → 09/01		SU45 (U)	SU45 (U)	
			10/01 → 12/12		SU48 (U)	SU48 (U)	
			05/14 →		SU65 (U)	SU45 (U)	
Commander			04/06 → 12/09		SU45 (U)	SU45 (U)	
Compass			11/06 →		SU55 (U)	SU50 (U)	
Grand Cherokee			04/99 → 08/11		SU53 (U)	SU53 (U)	
			09/11 →		SU55 (U)	SU50 (U)	
Patriot			09/07 → 12/12		SU53 (U)	SU53 (U)	
Renegade			10/14 →		SC55 (3A)	SC50 (3A)	
Wrangler / Unlimited			04/07 →		SU35 (U)	SU35 (U)	
KIA							
Besta			10/95 →		SU45 (U)	SU45 (U)	
Carens			12/01 → 08/06		SU60 (U)	SU45 (U)	
			09/06 → 01/11		SU65C (U)	SU40 (U)	
			04/13 →		SU65 (U)	SU65B (U)	
Carnival			03/98 → 05/06		SU60 (U)	SU60 (U)	
			06/06 → 01/11		SU65 (U)	SU45 (U)	
Cee'd		3 5	12/06 → 09/09		SC60 (3A)	SC45 (3A)	
		3 5	10/09 → 04/12		SU60 (U)	SU45 (U)	
Cee'd /-GT		5	05/12 →		SU65C (U)	SU35 (U)	
Cee'd		SW	09/07 → 09/09		SC60 (3A)	SC45 (3A)	
		SW	10/09 → 08/12		SU60 (U)	SU45 (U)	
		SW	09/12 →		SU65C (U)	SU35 (U)	
Cerato			07/04 → 06/07		SU60 (U)	SU40 (U)	
Clarus			10/95 → 03/01		SU53 (U)	SU48 (U)	
			03/98 → 03/01		SU53 (U)	SU48 (U)	
Frontier			1995 →		SU50 (U)	SU50 (U)	
Joice			1999 → 2003		SU55 (U)	SU45 (U)	
Magentis			10/01 → 09/05		SU55 (U)	SU45 (U)	
			10/05 → 01/12		SU60 (U)		
Niro			07/16 →		SU65C (U)	SU40 (U)	
Optima / Optima GT			02/16 →		SU65C (U)	SU45 (U)	
Picanto			04/04 → 05/11		SU55 (U)	SU35 (U)	
			05/11 →		SU55 (U)	SU40 (U)	
Preggio			09/97 → 2004		SU53 (U)	SU45 (U)	
Pride/ Festiva			01/95 → 06/01		SU45 (U)	SU45 (U)	
Pro Cee'd		3 5	12/06 → 09/09		SC60 (3A)	SC45 (3A)	
		3 5	10/09 → 04/12		SU60 (U)	SU45 (U)	
Pro Cee'd /-GT		3	04/13 →		SU65C (U)	SU35 (U)	
Rio			10/00 → 03/05		SU53 (U)	SU40 (U)	
		4	04/05 → 06/11		SU55 (U)	SU40 (U)	
		3 5	07/11 →		SU65C (U)	SU40 (U)	
		5	04/05 → 06/11		SU55 (U)	SU40 (U)	
Sephia/ Leo/ Mentor		4	11/93 → 12/00		SU53 (U)	SU48 (U)	
		5	11/93 → 12/00		SU53 (U)	SU48 (U)	

For/Für				SPOILER – HBLADE			
KIA (...)							
Shuma			03/98 → 03/04		**SU53** (U)	**SU48** (U)	
Sorento	1		08/02 → 09/09		**SU60** (U)	**SU45** (U)	
			10/09 → 03/15		**SU60** (U)	**SU50** (U)	
	3		04/15 →		**SU65** (U)	**SU40** (U)	
Sportage			02/94 → 07/02		**SU50** (U)	**SU50** (U)	
			10/04 → 08/10		**SU60** (U)	**SU40** (U)	
			09/10 → 12/15		**SU60** (U)	**SU45** (U)	
Venga			01/10 →		**SC65** (3A)	**SC35** (3A)	
LADA							
110			01/97 →		**SU50** (U)	**SU50** (U)	
111			01/98 →		**SU50** (U)	**SU50** (U)	
112			10/00 →		**SU50** (U)	**SU50** (U)	
Kalina 1117			10/05 →		**SU60** (U)	**SU40** (U)	
Kalina 1118			10/05 →		**SU60** (U)	**SU40** (U)	
Kalina 1119			10/05 →		**SU60** (U)	**SU40** (U)	
Tavria			1990 → 09/92		**SU50** (U)	**SU50** (U)	
		x1	10/92 →		**SU50** (U)		
LANCIA							
Dedra			03/89 → 02/96		**SU55** (U)	**SU45** (U)	
		Station Wagon	09/94 → 02/96		**SU55** (U)	**SU45** (U)	
Delta			03/93 → 02/96		**SU53** (U)	**SU45** (U)	
	HPE		01/95 → 02/96		**SU53** (U)	**SU45** (U)	
	HPE HF/ 2.0 Ltr		03/96 → 04/00		**SU53** (U)	**SU45** (U)	
		5	07/08 →		**SC60** (3A)	**SC43** (3A)	
Flavia		4	10/11 →		**SU60** (U)	**SU55** (U)	
			10/12 →		**SU60** (U)	**SU55** (U)	
Musa			09/04 → 10/07		**SU55** (U)	**SU35** (U)	
			11/07 →		**SC55** (3A)	**SC35** (3A)	
Thema			10/88 → 09/94		**SU50** (U)	**SU50** (U)	
			10/88 → 09/94		**SU50** (U)	**SU50** (U)	
			10/11 →		**SU60** (U)	**SU53** (U)	
Voyager			10/11 →		**SU60** (U)	**SU50** (U)	
Y	(Ipsilon)		01/96 → 02/03		**SU55** (U)	**SU40** (U)	
Y10		x1	01/85 → 08/92		**SU45** (U)		
Ypsilon		3	03/03 → 12/12		**SU60** (U)	**SU40** (U)	
		5	06/11 →		**SC60** (3A)	**SC38** (3A)	
Zeta			10/94 → 04/02		**SU65C** (U)	**SU50** (U)	
LAND ROVER							
Discovery	1		09/89 → 06/93		**SU45** (U)	**SU45** (U)	
	2		07/93 → 11/98		**SU45** (U)	**SU45** (U)	
	Sport		03/15 →		**SU65** (U)	**SU50** (U)	
Evoque		3 5	09/11 →		**SC60** (3A)	**SC53** (3A)	
			02/16 →		**SC60** (3A)	**SC53** (3A)	
Freelander	1		09/97 → 11/06		**SU55** (U)	**SU53** (U)	
	2		12/06 →		**SC60** (2A)	**SC50** (2A)	
Range Rover			01/89 → 09/94		**SU45** (U)	**SU45** (U)	
			10/94 → 02/02		**SU55** (U)	**SU55** (U)	
LDV (LEYLAND DAF)							
Convoy			01/96 →		**SU50** (U)	**SU50** (U)	
LEXUS							
GS	300h / 450h / GS F		06/12 →		**SU65** (U)	**SU45** (U)	
IS	220d / 250		11/05 → 05/13		**SU55** (U)	**SU48** (U)	
	250C		06/09 → 05/13		**SU55** (U)	**SU48** (U)	
	250/300H	4	06/13 →		**SU60** (U)	**SU45** (U)	
RC / RCF			09/14 →		**SU60** (U)	**SU45** (U)	
RX	350 / 450H		06/09 → 12/15		**SU65** (U)	**SU55** (U)	
	350/ 450H		01/16 →		**SC65** (3A)	**SC53** (3A)	
LIGIER							
JS 50 / JS 50L / JS RC		x1	02/13 →		**SU48** (U)		
Optima		3 5 x1			**SU48** (U)		
Optimax		x1			**SU48** (U)		
X-TOO 2 / Max		x1			**SU60** (U)		
MAHINDRA							
Bolero			2006 →		**SU40** (U)	**SU40** (U)	

For/Für			2 3	– SPOILER – HBLADE –			
MAHINDRA (...)							
Goa			2006 →		SU50 (U)	SU50 (U)	
MAZDA							
121	(DA)		10/88 → 02/91		SU45 (U)	SU45 (U)	
	(DB)	L / LX / Canvas	03/91 → 02/96		SU50 (U)	SU40 (U)	
	(JA / JB)		03/96 →		SU48 (U)	SU48 (U)	
323	(BF)		1986 → 1990		SU45 (U)	SU45 (U)	
			1986 → 1990		SU45 (U)	SU45 (U)	
	(BG)	3	1990 → 09/94		SU53 (U)	SU45 (U)	
		5	1990 → 09/94		SU53 (U)	SU45 (U)	
			1990 → 09/94		SU45 (U)	SU45 (U)	
			1990 → 09/94		SU53 (U)	SU45 (U)	
	(BA)	Coupe / Sportiva / Sporty 3	10/94 → 08/98		SU53 (U)	SU45 (U)	
		Familia 4	10/94 → 08/98		SU53 (U)	SU45 (U)	
		F / Astina 5	10/94 → 08/98		SU53 (U)	SU48 (U)	
		Station Wagon	10/94 → 08/98		SU45 (U)	SU45 (U)	
	(BJ)	3	02/97 → 12/03		SU53 (U)	SU48 (U)	
		4	09/98 → 12/03		SU53 (U)	SU48 (U)	
		5	09/98 → 12/03		SU53 (U)	SU45 (U)	
626	(GD)		10/88 → 01/92		SU48 (U)	SU48 (U)	
			10/88 → 01/92		SU48 (U)	SU48 (U)	
	(GE)	4	02/92 → 06/97		SU53 (U)	SU50 (U)	
		5	02/92 → 06/97		SU53 (U)	SU50 (U)	
			02/92 → 02/98		SU48 (U)	SU48 (U)	
	(GF)	4	07/97 → 07/02		SU53 (U)	SU48 (U)	
		5	07/97 → 07/02		SU53 (U)	SU48 (U)	
	(GW)	Station Wagon	03/98 → 07/02		SU53 (U)	SU48 (U)	
929			1987 → 12/89		SU48 (U)	SU48 (U)	
B-Series			01/84 →		SU45 (U)	SU45 (U)	
	B2500		01/96 → 12/06		SU45 (U)	SU45 (U)	
BT-50			01/07 →		SU45 (U)	SU45 (U)	
Capella			1986 → 1990		SU45 (U)	SU45 (U)	
			1990 → 12/91		SU48 (U)	SU48 (U)	
			01/92 →		SU53 (U)	SU50 (U)	
			09/88 →		SU48 (U)	SU48 (U)	
			1990 →		SU48 (U)	SU48 (U)	
CX-3			06/15 →		SU55 (U)	SU45 (U)	
CX-5			03/12 →		SU60 (U)	SU45 (U)	
CX-7			10/07 →		SU65 (U)	SU40 (U)	
Demio			09/98 → 04/03		SU50 (U)	SU40 (U)	
Familia			1986 → 1990		SU45 (U)	SU45 (U)	
			1990 →		SU50 (U)		
			1990 →		SU50 (U)	SU45 (U)	
			1990 →		SU50 (U)	SU45 (U)	
Festiva			02/88 → 02/91		SU45 (U)	SU45 (U)	
	L / LX		03/91 →		SU50 (U)	SU40 (U)	
Luce			1987 → 12/89		SU48 (U)	SU48 (U)	
			1990 →		SU50 (U)	SU50 (U)	
Mazda	2		03/03 → 09/07		SU60 (U)	SU40 (U)	
			10/07 → 03/15		SU60 (U)	SU35 (U)	
	3	4	04/09 → 11/13		SU60 (U)	SU45 (U)	
			12/13 →		SU60 (U)		
		5	04/09 → 10/13		SU60 (U)	SU45 (U)	
			11/13 → 09/14		SU60 (U)		
	5		07/05 →		SU65 (U)	SU40 (U)	
	6		03/08 → 12/12		SU60 (U)	SU40 (U)	
		4	01/13 →		SU60 (U)	SU45 (U)	
		5	07/02 → 02/08		SU55 (U)	SU45 (U)	
			07/02 → 02/08		SU55 (U)	SU45 (U)	
			03/08 → 12/12		SU60 (U)	SU40 (U)	
			01/13 →		SU60 (U)	SU45 (U)	
MPV			06/96 → 12/99		SU55 (U)	SU55 (U)	
			01/00 → 12/05		SU60 (U)	SU55B (U)	
MX-3			09/91 → 1998		SU53 (U)	SU45 (U)	
MX-5			1990 → 09/15		SU45 (U)	SU45 (U)	
			10/15 →		SU45 (U)	SU48 (U)	
MX-6			11/91 →		SU50 (U)	SU50 (U)	

For/Für				– SPOILER – HBLADE –			
MAZDA (...)							
Premacy			08/99 →		**SU60** (U)	**SU40** (U)	
RX8			11/03 →		**SU50** (U)	**SU45** (U)	
Tribute			07/01 → 12/05		**SU50** (U)	**SU48** (U)	
Xedos	6		01/93 →		**SU53** (U)	**SU50** (U)	
	9		12/93 →		**SU53** (U)	**SU50** (U)	
MEGA							
e-City		x1	01/08 →		**SU55** (U)		
GTO / City		x1	2014 →		**SU55** (U)		
MERCEDES							
200 / 300	(123)		02/76 → 12/85		**SU50** (U)	**SU50** (U)	
			06/78 → 12/85		**SU50** (U)	**SU50** (U)	
A-Class	(W168)		09/97 → 08/04		**SU65** (U)	**SU55B** (U)	
	(W169)		09/04 → 08/12		**SC65** (2A)	**SC55B** (2A)	
	(W176)		09/12 → 07/15		**SC60** (2A)	**SC48** (2A)	**SB24** (2R)
AMG-GT / GT S	(C190)		03/15 →		**SC50** (1B)	**SC50** (1B)	
B-Class	(W245)		05/05 → 10/11		**SC65** (2A)	**SC55B** (2A)	
	(W246)		11/11 → 08/15		**SC65** (2A)	**SC48** (2A)	
C-Class	(W204)		04/07 → 12/08		**SC60** (1A)	**SC60** (1A)	
			01/09 → 03/13		**SC60** (1B)	**SC60** (1B)	
			04/13 → 03/14		**SC60** (3A)	**SC60** (3A)	
			06/11 → 02/13		**SC60** (1B)	**SC60** (1B)	
			03/13 → 10/15		**SC60** (3A)	**SC60** (3A)	
			12/07 → 12/08		**SC60** (1B)	**SC60** (1B)	
			01/09 → 03/13		**SC60** (1B)	**SC60** (1B)	
			04/13 → 08/14		**SC60** (3A)	**SC60** (3A)	
	(W205)		04/14 → 08/14		**SC53** (2A)	**SC53** (2A)	
Citan / Combi	(W415)		10/12 →		**SC55** (4C)	**SC50** (4C)	
			10/12 →		**SC55** (4C)	**SC50** (4C)	
CL-Class 500/ 600	(C215)		10/00 → 05/06		**SC65** (1B)	**SC65** (1B)	
CL-Class	(C216)		10/06 →		**SC65** (1B)	**SC65** (1B)	
CLA-Class	(X117)		04/13 → 07/15		**SC60** (2A)	**SC48** (2A)	
CLA-Class Shooting Brake	(X117)		03/15 → 07/15		**SC60** (2A)	**SC48** (2A)	**SB33** (2R)
CLS-Class	(W218)		01/11 → 03/14		**SC60** (1B)	**SC60** (1B)	
			04/14 →		**SC60** (3A)	**SC60** (3A)	
CLS-Class Shooting Brake	(X218)		10/12 → 04/14		**SC60** (1B)	**SC60** (1B)	**SB33** (2R)
			04/14 →		**SC60** (3A)	**SC60** (3A)	**SB33** (2R)
CLS-Class	(W219)		10/04 → 12/10		**SC65** (1B)	**SC65** (1B)	
E-Class	(C207)		05/09 → 02/13		**SC60** (1B)	**SC60** (1B)	
			03/13 →		**SC60** (3A)	**SC60** (3A)	
	(W211)		02/02 → 02/09		**SC65** (1B)	**SC65** (1B)	
			02/03 → 10/09		**SC65** (1B)	**SC65** (1B)	
	(W212)		03/09 → 03/14		**SC60** (1B)	**SC60** (1B)	
			04/14 → 02/16		**SC60** (3A)	**SC60** (3A)	
			11/09 → 03/14		**SC60** (1B)	**SC60** (1B)	
			04/14 →		**SC60** (3A)	**SC60** (3A)	
G-Class	(460)		03/79 → 08/92		**SU40** (U)	**SU40** (U)	
	(463)		09/89 →		**SU40** (U)	**SU40** (U)	
GL-Class	(X164)		09/06 → 11/12		**SC70** (2A)	**SC53** (2A)	
	(X166)		12/12 → 10/15		**SC65** (3A)	**SC60** (3A)	
GLA-Class	(X156)		03/14 →		**SC60** (2A)	**SC48** (2A)	**SB28** (2R)
GLE-Class	(C166)		04/15 →		**SC65** (3A)	**SC60** (3A)	
GLK-Class	(X204)		09/08 → 02/14		**SC55** (1B)	**SC48** (1B)	
			03/14 → 09/15		**SC55** (3A)	**SC48** (3A)	
ML-Class	(W164)		07/05 → 10/11		**SC70** (2A)	**SC53** (2A)	
	(W166)		11/11 → 07/15		**SC65** (3A)	**SC60** (3A)	
R-Class	(W251)		10/05 → 07/13		**SC70** (2A)	**SC53** (2A)	
S-Class	(W220)		10/00 → 09/05		**SC70** (1B)	**SC70** (1B)	
	(W221)		10/05 → 08/13		**SC70** (1B)	**SC70** (1B)	
SL-Class	(R230)		10/01 → 03/12		**SC65** (1B)	**SC65** (1B)	
SLC-Class	(R173)		03/16 →		**SC55** (2A)	**SC55** (2A)	
SLK-Class	(R170)		01/96 → 02/04		**SU55** (U)	**SU55** (U)	
	(R171)		03/04 → 03/11		**SC55** (2A)	**SC55** (2A)	
	(R172)		04/11 → 02/16		**SC55** (2A)	**SC55** (2A)	
SLS AMG	(197)		10/10 → 02/15		**SC50** (1B)	**SC50** (1B)	
Sprinter			06/91 → 04/95		**SU50** (U)	**SU50** (U)	
			05/95 → 05/06		**SU60** (U)	**SU55** (U)	

For/Für				– SPOILER – – HBLADE –			
MERCEDES (...)							
Sprinter	(906)		06/06 →		**SC65** (2A)	**SC60** (2A)	**SB43** (2R)
Vaneo	(W414)		04/02 → 03/04		**SU65** (U)	**SU55B** (U)	
			04/04 → 07/06		**SC65** (2A)	**SC60B** (2A)	
Viano	(W639)		11/05 → 02/11		**SC70** (2A)	**SC65B** (2A)	
			03/11 → 06/14		**SC70** (2A)		**SB40** (2R)
Vito	(W639)		11/05 → 05/14		**SC70** (2A)	**SC65B** (2A)	
			11/05 → 05/14		**SC70** (2A)	**SC65B** (2A)	
MINI							
Mini	One/ Cooper/ Cooper S		05/12 → 02/14		**SC45** (4C)	**SC45** (4C)	
			05/12 → 03/16		**SC45** (4C)	**SC45** (4C)	
	Clubman		05/12 → 09/15		**SC45** (4C)	**SC45** (4C)	**SB28** (2R)
			10/15 →		**SC53** (3B)	**SC50** (3B)	
	Clubvan		09/12 → 09/15		**SC45** (4C)	**SC45** (4C)	**SB28** (2R)
	Countryman/ All 4		10/10 →		**SC48** (2A)	**SC50** (2A)	
	Paceman		01/13 →		**SC48** (2A)	**SC50** (2A)	**SB28**
MITSUBISHI							
3000 GT			10/92 →		**SU53** (U)	**SU50** (U)	
ASX			07/10 →		**SU60** (U)	**SU53** (U)	
Attrage / Mirage G4			04/14 →		**SU55** (U)	**SU35** (U)	
Canter			01/87 → 12/96		**SU45** (U)	**SU45** (U)	
			01/97 →		**SU48** (U)	**SU48** (U)	
Carisma			01/95 →		**SU53** (U)	**SU50** (U)	
			01/95 →		**SU53** (U)	**SU50** (U)	
Colt	3		10/87 → 11/91		**SU48** (U)	**SU45** (U)	
	4		12/91 → 02/96		**SU50** (U)	**SU40** (U)	
	5		03/96 → 05/04		**SU53** (U)	**SU48** (U)	
Eclipse			01/91 → 12/95		**SU50** (U)	**SU50** (U)	
Galant			12/87 → 04/92		**SU48** (U)	**SU45** (U)	
			05/92 → 02/97		**SU55** (U)	**SU48** (U)	
			03/97 →		**SU55** (U)	**SU45** (U)	
		Hatchback	12/87 → 04/92		**SU48** (U)	**SU45** (U)	
			05/92 → 02/97		**SU55** (U)	**SU48** (U)	
			03/97 →		**SU55** (U)	**SU45** (U)	
Grand Pajero	3		04/00 → 11/06		**SU50** (U)	**SU48** (U)	
i-Miev		x1	01/11 →		**SU65** (U)		
L200			10/96 → 02/06		**SU48** (U)	**SU48** (U)	
			03/06 → 08/15		**SU55** (U)	**SU48** (U)	
			09/15 →		**SU55** (U)	**SU45** (U)	
L300			1991 →		**SU45** (U)	**SU45** (U)	
Lambda			1990 → 05/93		**SU48** (U)	**SU45** (U)	
			06/93 →		**SU55** (U)	**SU48** (U)	
Lancer			05/92 → 03/04		**SU50** (U)	**SU45** (U)	
			05/92 → 03/04		**SU50** (U)	**SU45** (U)	
			04/04 → 05/08		**SU60** (U)		
		Evolution 8 / 9	04/04 → 04/08		**SU60** (U)	**SU45** (U)	
		Evolution X	05/08 → 08/14		**SU60** (U)	**SU40** (U)	
		Sportback/ Ralliart	10/08 →		**SU60** (U)	**SU40** (U)	
Mirage			1992 →		**SU50** (U)	**SU45** (U)	
Montero			04/00 → 11/06		**SU50** (U)	**SU48** (U)	
			12/06 →		**SU55** (U)	**SU50** (U)	
Outlander			05/03 → 01/07		**SU55** (U)	**SU45** (U)	
			02/07 → 09/12		**SU60** (U)	**SU53** (U)	
			10/12 →		**SU65** (U)	**SU45** (U)	
Pajero	2		12/90 → 03/00		**SU48** (U)	**SU48** (U)	
			12/90 → 03/00		**SU48** (U)	**SU48** (U)	
	3		04/00 → 11/06		**SU50** (U)	**SU48** (U)	
	4		12/06 →		**SU55** (U)	**SU50** (U)	
	Pinin		01/00 →		**SU48** (U)	**SU48** (U)	
	Sport		12/98 →		**SU50** (U)	**SU50** (U)	
Sigma			1990 →		**SU50** (U)	**SU48** (U)	
Space Runner			06/91 →		**SU55** (U)	**SU45** (U)	
Space Star			11/98 → 12/07		**SU53** (U)	**SU45** (U)	
Space Star / Mirage			04/13 →		**SU55** (U)	**SU35** (U)	
Space Wagon			05/91 → 08/99		**SU55** (U)	**SU45** (U)	
Valley			1988 →		**SU45** (U)	**SU45** (U)	

For/Für				– SPOILER – – HBLADE –			
MOSKOVITCH							
2141			12/86 →		SU45 (U)	SU45 (U)	
Aleko S			01/91 →		SU45 (U)	SU45 (U)	
NISSAN							
100 NX			10/90 →		SU50 (U)	SU48 (U)	
200 SX			09/88 → 06/94		SU50 (U)	SU50 (U)	
			07/94 →		SU53 (U)		
300 ZX	(Z31)		01/84 → 12/89		SU48 (U)	SU48 (U)	
	(Z32)	V6	01/90 → 12/99		SU53 (U)	SU50 (U)	
350 Z			09/03 → 05/09		SU50 (U)	SU45 (U)	
		Roadster	01/05 → 05/09		SU50 (U)	SU45 (U)	
Almera		3 5	07/95 → 02/00		SU53 (U)	SU48 (U)	
			03/00 → 12/06		SU53 (U)	SU40 (U)	
		4	07/95 → 03/00		SU53 (U)	SU48 (U)	
Almera Tino			06/00 → 12/06		SU65 (U)	SU45 (U)	
Arna			1983 → 1985		SU50 (U)	SU45 (U)	
Avia 1000 / 1250 / 2000					SU45 (U)	SU45 (U)	
Avia 1600 / 3600 / 5600					SU45 (U)	SU45 (U)	
Bluebird	(910)		1980 → 1987		SU45 (U)	SU45 (U)	
			1980 → 1984		SU40 (U)	SU40 (U)	
	(T12)		12/85 →		SU48 (U)	SU48 (U)	
	(U11)		10/83 → 1987		SU48 (U)	SU48 (U)	
			10/83 → 1987		SU45 (U)	SU45 (U)	
Cabstar			2008 →		SU50 (U)	SU50 (U)	
Cube			10/09 →		SU48 (U)	SU48 (U)	
Ebro 1600 / 3600 / A2000 / 5600					SU45 (U)	SU45 (U)	
Ebro F260 / 275 / 350 / 2000R6			→ 1985		SU50 (U)	SU50 (U)	
Ebro Furgon E154/ E35 / E60					SU45 (U)	SU45 (U)	
Ebro Furgon F/ E					SU40 (U)	SU40 (U)	
Ebro Furgon L60F / L80F					SU45 (U)	SU45 (U)	
Ebro JX 20 Trade 2L			1986 →		SU50 (U)	SU50 (U)	
Juke			10/10 →		SU55 (U)	SU35 (U)	
King Cab			01/93 →		SU48 (U)	SU48 (U)	
Kubistar			07/01 → 03/10		SU50 (U)	SU50 (U)	
			11/03 → 03/10		SU50 (U)	SU50 (U)	
Laurel	(C32)		01/85 → 06/90		SU48 (U)	SU48 (U)	
Leaf			06/11 →		SU65 (U)	SU40 (U)	
Maxima			12/88 → 09/94		SU53 (U)	SU48 (U)	
	QX		10/94 → 04/00		SU55 (U)	SU50 (U)	
			05/00 → 01/06		SU65C (U)	SU40 (U)	
Micra	(K10)		11/82 → 09/92		SU45 (U)	SU45 (U)	
	(K11)		10/92 → 08/00		SU50 (U)	SU45 (U)	
		3 5	09/00 → 12/02		SU48 (U)	SU45 (U)	
	(K12)	3 5	01/03 → 10/10		SU53 (U)	SU40 (U)	
	(K12) C+C		10/05 → 2009		SU53 (U)	SU40 (U)	
	(K13)		11/10 →		SU53 (U)	SU35 (U)	
Navara	(D40)		05/05 →		SU60 (U)	SU48 (U)	
	NP300		01/16 →		SU60 (U)	SU40 (U)	
Note			10/05 → 09/13		SU55 (U)	SU35 (U)	
NV 200 / Evalia			12/09 →		SU53 (U)	SU40 (U)	
NV 300			11/16 →		SC65 (3A)	SC48 (3A)	
			11/16 →		SC65 (3A)	SC48 (3A)	
NV 400			10/11 →		SU65 (U)	SU65 (U)	
Pathfinder			09/97 → 12/04		SU55 (U)	SU50 (U)	
			03/05 →		SU60 (U)	SU48 (U)	
Patrol			01/86 → 08/88		SU45 (U)	SU45 (U)	
Patrol GR	(Y60)		08/87 → 02/98		SU45 (U)	SU45 (U)	
	(Y61)		03/98 →		SU50 (U)	SU48 (U)	
Pick-up / NP300	(D22)		09/98 →		SU48 (U)	SU48 (U)	
Pixo			06/09 →		SU53 (U)	SU35 (U)	
Platina		4	1999 → 2008		SU53 (U)	SU45 (U)	
Prairie			12/82 → 12/85		SU45 (U)	SU45 (U)	
			01/86 → 09/88		SU48 (U)	SU48 (U)	
Primastar			03/02 →		SU60 (U)	SU53 (U)	
			03/02 →		SU60 (U)	SU50 (U)	
Primera	1	4	02/90 → 09/96		SU53 (U)	SU45 (U)	
			10/96 → 02/02		SU53 (U)	SU50 (U)	

For/Für			2 3	– SPOILER – HBLADE –			
NISSAN (...)							
Primera	1		02/90 → 09/96		**SU53** (U)	**SU45** (U)	
			10/96 → 04/02		**SU53** (U)	**SU50** (U)	
			02/90 → 08/97		**SU53** (U)	**SU45** (U)	
			03/98 → 02/02		**SU53** (U)	**SU50** (U)	
	2		03/02 → 10/06		**SU65C** (U)	**SU48** (U)	
			05/02 → 10/06		**SU65C** (U)	**SU48** (U)	
			03/02 → 10/06		**SU65C** (U)	**SU48** (U)	
Pulsar			09/14 →		**SC65** (3A)	**SC35** (3A)	
Qashqai			03/07 → 01/14		**SC60** (2A)	**SC38** (2A)	
			02/14 →		**SU65** (U)	**SU40** (U)	
Serena			07/92 →		**SU60** (U)	**SU60** (U)	
Silvia			07/86 →		**SU48** (U)	**SU48** (U)	
Skyline			1987 →		**SU45** (U)	**SU45** (U)	
Sunny	(B11)		10/81 → 05/86		**SU45** (U)	**SU45** (U)	
			10/81 → 05/86		**SU40** (U)	**SU40** (U)	
	(B12)		06/86 → 09/90		**SU50** (U)	**SU45** (U)	
			06/86 → 09/90		**SU50** (U)	**SU45** (U)	
			06/86 → 09/90		**SU45** (U)	**SU45** (U)	
	(B12 / N13)		06/86 → 09/90		**SU50** (U)	**SU45** (U)	
	(N14)		10/90 →		**SU53** (U)	**SU45** (U)	
			10/90 →		**SU53** (U)	**SU45** (U)	
	(Y10)		10/90 →		**SU53** (U)	**SU45** (U)	
Terrano	1		08/87 → 02/93		**SU48** (U)	**SU48** (U)	
	2		03/93 →		**SU53** (U)	**SU50** (U)	
Tiida	1		01/08 → 04/11		**SU60** (U)	**SU35** (U)	
	2		05/11 →		**SU65** (U)	**SU35** (U)	
Trade			1986 →		**SU50** (U)	**SU50** (U)	
Urvan			1989 →		**SU48** (U)	**SU48** (U)	
Vanette			09/86 → 05/95		**SU45** (U)	**SU45** (U)	
	Cargo		06/95 →		**SU60** (U)	**SU60** (U)	
X-Trail	2		07/07 → 06/14		**SU60** (U)	**SU40** (U)	
	3		07/14 →		**SU65** (U)	**SU40** (U)	
OPEL							
Adam			03/13 →		**SC65** (3A)	**SC40** (3A)	
Adam Rocks			08/14 →		**SC65** (3A)	**SC40** (3A)	
Admiral			1978 →		**SU45** (U)	**SU45** (U)	
Agila	A		05/00 → 02/08		**SU50** (U)	**SU45** (U)	
Ampera			11/11 → 06/15		**SC65** (3A)	**SC65B** (3A)	
Antara			12/06 →		**SU60** (U)	**SU40** (U)	
Arena			02/98 → 2002		**SU50** (U)	**SU50** (U)	
Ascona	B		08/75 → 07/81		**SU45** (U)	**SU45** (U)	
	C		08/81 → 07/88		**SU45** (U)	**SU45** (U)	
			08/81 → 07/88		**SU45** (U)	**SU45** (U)	
Astra	F		09/91 → 06/98		**SU45** (U)	**SU45** (U)	
			09/91 → 06/98		**SU45** (U)	**SU45** (U)	
			09/91 → 03/98		**SU45** (U)	**SU45** (U)	
			07/93 → 05/01		**SU45** (U)	**SU45** (U)	
			09/91 → 03/98		**SU45** (U)	**SU45** (U)	
	G		07/98 → 04/04		**SU50** (U)	**SU45** (U)	
			04/98 → 04/04		**SU50** (U)	**SU45** (U)	
			06/00 → 12/04		**SU50** (U)	**SU45** (U)	
			06/01 → 02/06		**SU50** (U)	**SU45** (U)	
			04/98 → 08/04		**SU50** (U)	**SU45** (U)	
	H	GTC	01/05 → 10/11		**SC55** (1B)	**SC45** (1B)	
			04/04 → 12/09		**SC55** (1B)	**SC45** (1B)	
		Twin Top	03/06 → 04/13		**SC55** (1B)	**SC45** (1B)	
			12/04 → 12/10		**SC55** (1B)	**SC45** (1B)	
		Delvan	09/06 → 12/11		**SC55** (1B)	**SC45** (1B)	
	J	GTC	11/11 →		**SC70** (3A)	**SC65B** (3A)	
			01/10 → 09/15		**SC65** (3A)	**SC65B** (3A)	
		Sports Tourer	01/11 → 03/16		**SC65** (3A)	**SC65B** (3A)	
	K		10/15 →		**SC70** (3A)	**SC60B** (3A)	
		Sports Tourer	04/16 →		**SC70** (3A)	**SC60B** (3A)	
Calibra			09/89 → 01/98		**SU48** (U)	**SU48** (U)	
Campo			01/96 →		**SU45** (U)	**SU45** (U)	
Cascada			05/13 →		**SC70** (3A)	**SC65B** (3A)	

For/Für			2+3	SPOILER – HBLADE –			
OPEL (...)							
Combo			1993 → 09/01		**SU45** (U)	**SU45** (U)	
			10/01 → 10/11		**SU50** (U)	**SU40** (U)	
Combo / Combo Tour			11/11 →		**SC60** (3A)	**SC40** (3A)	
Combo			09/05 → 10/11		**SU50** (U)	**SU40** (U)	
Combo / Combo Tour			11/11 →		**SC60** (3A)	**SC40** (3A)	**SB40** (2R)
Corsa	A		10/82 → 02/93		**SU40** (U)	**SU40** (U)	
	B		03/93 → 09/00		**SU45** (U)	**SU45** (U)	
			03/93 → 09/00		**SU45** (U)	**SU45** (U)	
	C		10/00 → 08/06		**SU50** (U)	**SU45** (U)	
	D		09/06 → 12/14		**SC65** (2A)	**SC40** (2A)	
	E		01/15 →		**SC65** (2A)	**SC40** (2A)	
		Van	1988 → 02/93		**SU40** (U)	**SU40** (U)	
Frontera			03/91 → 09/98		**SU48** (U)	**SU48** (U)	
			10/98 →		**SU48** (U)	**SU48** (U)	
GT			07/07 → 2009		**SU40** (U)	**SU55** (U)	
Insignia			01/09 →		**SU60** (U)	**SU45** (U)	
			01/09 →		**SU60** (U)	**SU45** (U)	
		Sports Tourer	03/09 →		**SU60** (U)	**SU45** (U)	
Kadett	D		08/79 → 07/84		**SU40** (U)	**SU40** (U)	
			08/79 → 07/84		**SU40** (U)	**SU40** (U)	
	E	GSI	08/84 → 08/91		**SU45** (U)	**SU45** (U)	
	E GSI		08/84 → 08/91		**SU45** (U)	**SU45** (U)	
	E		10/85 → 08/91		**SU45** (U)	**SU45** (U)	
			08/84 → 08/91		**SU45** (U)	**SU45** (U)	
Manta			08/75 → 08/80		**SU45** (U)	**SU45** (U)	
Meriva	A		04/03 → 05/10		**SU60** (U)	**SU55B** (U)	
	B		06/10 →		**SC70** (3A)	**SC60B** (3A)	
Mokka			10/12 →		**SC65** (3A)	**SC35** (3A)	
Monterey	1		04/92 → 04/95		**SU50** (U)	**SU50** (U)	
	1 / -2		05/95 →		**SU50** (U)	**SU50** (U)	
Monza			06/78 → 08/86		**SU45** (U)	**SU45** (U)	
Movano			05/10 →		**SU65** (U)	**SU65** (U)	
Omega	A		10/86 → 01/94		**SU48** (U)	**SU48** (U)	
			10/86 → 01/94		**SU48** (U)	**SU48** (U)	
	B		02/94 → 11/03		**SU60** (U)	**SU48** (U)	
			02/94 → 11/03		**SU60** (U)	**SU48** (U)	
Rekord			08/77 → 09/86		**SU45** (U)	**SU45** (U)	
			08/77 → 09/86		**SU45** (U)	**SU45** (U)	
Senator			06/78 → 01/87		**SU45** (U)	**SU45** (U)	
			02/87 → 06/93		**SU48** (U)	**SU48** (U)	
Signum			05/03 → 11/08		**SU60** (U)	**SU48** (U)	
Sintra			10/96 →		**SU60** (U)	**SU55B** (U)	
Tigra			10/94 → 12/03		**SU45** (U)	**SU45** (U)	
		Twintop	09/04 →		**SU50** (U)	**SU45** (U)	
Vectra	B		09/95 → 03/02		**SU48** (U)	**SU48** (U)	
			09/95 → 03/02		**SU48** (U)	**SU48** (U)	
			11/96 → 11/03		**SU48** (U)	**SU48** (U)	
	C		04/02 → 12/08		**SU60** (U)	**SU48** (U)	
			04/02 → 09/05		**SU60** (U)	**SU48** (U)	
			10/05 → 12/08		**SU60** (U)		**SB40**
			12/03 → 02/09		**SU60** (U)	**SU48** (U)	
Vivaro			06/01 → 06/14		**SU60** (U)	**SU50** (U)	
			06/01 → 06/14		**SU60** (U)	**SU50** (U)	
			07/14 →		**SC65** (3A)	**SC48** (3A)	
			07/14 →		**SC65** (3A)	**SC48** (3A)	
Zafira	A		03/99 → 06/05		**SU60** (U)	**SU55B** (U)	
	B		07/05 →		**SC70** (2A)	**SC55B** (2A)	
	C	Tourer	11/11 →		**SC80** (3A)	**SC70B** (3A)	
PEUGEOT							
107		x1	06/05 → 05/14		**SU65C** (M1)		
108		x1	06/14 →		**SC65** (2A)		
205			1983 →		**SU45** (U)	**SU45** (U)	
	Multivan		01/85 →		**SU45** (U)	**SU45** (U)	
206			09/98 → 03/09		**SU65** (U)	**SU40** (U)	
		CC	11/00 → 02/07		**SU65** (U)	**SU40** (U)	
		SW	06/02 → 07/07		**SU65** (U)	**SU40** (U)	

For/Für			2	– SPOILER – HBLADE –			
PEUGEOT (...)							
206 + / 206 Plus		3 5	03/09 → 09/12		**SU65** (U)	**SU40** (U)	
207		3 5	04/06 → 03/12		**SC65** (1B)	**SC43** (1B)	
		CC	02/07 → 04/15		**SC65** (1B)	**SC43** (1B)	
		SW	07/07 → 05/13		**SC65** (1B)	**SC43** (1B)	
207 +		3 5	09/12 → 08/14		**SC65** (1B)	**SC43** (1B)	
208		3 5	04/12 →		**SC60** (3A)	**SC40** (3A)	
301			11/12 →		**SC60** (4C)	**SC40** (4C)	
306		3 5	02/93 →		**SU55** (U)	**SU50** (U)	
			02/93 →		**SU55** (U)		
		4	02/93 →		**SU55** (U)	**SU50** (U)	
			02/93 →		**SU55** (U)		
			02/93 →		**SU55** (U)	**SU50** (U)	
			02/93 →		**SU55** (U)		
			03/97 →		**SU55** (U)	**SU50** (U)	
			03/97 →		**SU55** (U)		
307		CC 3 5	05/01 → 09/04		**SU70** (U)	**SU65B** (U)	
			10/04 → 09/07		**SC70** (2A)	**SC65B** (2A)	
		CC	07/03 → 03/05		**SC70** (2A)	**SC60B** (2A)	
			04/05 → 12/08		**SC70** (2A)	**SC65B** (2A)	
		SW	04/02 → 09/04		**SU70** (U)	**SU65B** (U)	
			10/04 → 04/08		**SC70** (2A)	**SC65B** (2A)	
308		3 5	09/07 → 08/13		**SC75** (3A)	**SC65B** (3A)	
			09/13 →		**SC60** (3A)	**SC45** (3A)	
		CC	03/09 → 04/15		**SC75** (3A)	**SC65B** (3A)	
		SW	05/08 → 04/14		**SC75** (3A)	**SC65B** (3A)	
		SW	05/08 → 04/14		**SC75** (3A)	**SC65B** (3A)	
		SW	05/14 →		**SC60** (3A)	**SC45** (3A)	
309			1985 →		**SU45** (U)	**SU45** (U)	
407			04/04 → 02/11		**SC70** (1B)	**SC70B** (1B)	
			12/05 →		**SC70** (1B)	**SC70B** (1B)	
		SW	08/04 → 03/11		**SC70** (1B)	**SC70B** (1B)	
508			02/11 →		**SC65** (3A)	**SC65B** (3A)	
		SW / RXH	03/11 →		**SC65** (3A)	**SC65B** (3A)	
806			06/94 → 05/02		**SU65C** (U)	**SU50** (U)	
1007			05/05 →		**SU60** (U)	**SU45** (U)	
2008			04/13 →		**SC65** (3A)	**SC40** (3A)	
3008 / Hybrid 4			04/09 →		**SC80** (3A)	**SC70B** (3A)	
4007			07/07 → 12/12		**SU60** (U)	**SU53** (U)	
4008			05/12 →		**SU60** (U)	**SU53** (U)	
5008			10/09 →		**SC80** (3A)	**SC70B** (3A)	
Bipper / Tepee			02/08 →		**SC65** (4C)	**SC45** (4C)	
Boxer			02/94 → 06/06		**SU55** (U)	**SU55** (U)	
			07/06 →		**SC65** (3A)	**SC55** (3A)	
Expert	1		10/95 → 12/06		**SU65C** (U)	**SU50** (U)	
Expert / Tepee	2		01/07 → 05/16		**SU65** (U)	**SU50** (U)	
			01/07 → 05/16		**SU65** (U)	**SU50** (U)	
Expert			06/16 →		**SC65** (4C)	**SC50** (4C)	
			06/16 →		**SC65** (4C)	**SC50** (4C)	
iOn		x1	01/11 → 12/16		**SU65** (U)		
J5			1982 →		**SU50** (U)	**SU50** (U)	
Partner / Partner Origin	1		06/96 → 12/14		**SU55** (U)	**SU55** (U)	
Partner / Partner Origin	1		01/97 → 12/14		**SU55** (U)	**SU55** (U)	
Partner / Tepee	2		05/08 →		**SC65** (3A)	**SC40** (3A)	
Traveller			06/16 →		**SC65** (4C)	**SC50** (4C)	
			06/16 →		**SC65** (4C)	**SC50** (4C)	
RCZ			11/09 →		**SC65** (3A)	**SC65B** (3A)	
PIAGGIO							
Porter / Tipper / Quargo			01/98 →		**SU40** (U)	**SU40** (U)	
PORSCHE							
924			02/76 → 07/87		**SU45** (U)	**SU45** (U)	
928	S4		1987 →		**SU48** (U)	**SU48** (U)	
	GTS		1992 →		**SU48** (U)	**SU48** (U)	
944			10/81 → 12/84		**SU45** (U)	**SU45** (U)	
			1988 →		**SU48** (U)	**SU48** (U)	
Boxster	(986 Series)		01/96 → 10/04		**SU55** (U)	**SU53** (U)	
	(987 Series)		11/04 → 04/12		**SU55** (U)	**SU53** (U)	

3

For/Für			2 in 1	– SPOILER – HBLADE –			
PORSCHE (...)							
Cayenne	1 (955 séries)		03/03 → 10/07		**SC65** (1B)	**SC65** (1B)	
	1 (957 séries)		11/07 → 04/10		**SC65** (1B)	**SC65** (1B)	
	2 (958 séries)		05/10 →		**SC65** (1B)	**SC65** (1B)	**SB33** (3T)
Macan			04/14 →		**SC60** (3B)	**SC50** (3B)	**SB40** (2R)
Panamera V6 / S / 4S / Turbo			10/13 → 10/16		**SC60** (3B)	**SC50** (3B)	**SB40** (2R)
PROTON							
313/ 315			01/94 →		**SU50** (U)	**SU40** (U)	
413...420		4	01/94 →		**SU50** (U)	**SU40** (U)	
		5	01/94 →		**SU50** (U)	**SU40** (U)	
RENAULT							
Captur			04/13 → 06/16		**SC65** (4C)	**SC35** (4C)	
Clio	1		06/90 → 02/94		**SU45** (U)	**SU45** (U)	
			03/94 → 02/98		**SU50** (U)	**SU50** (U)	
	2	Campus 3 5	03/98 → 05/09		**SU53** (U)	**SU45** (U)	
			06/09 → 08/11		**SC50** (4C)	**SC45** (4C)	
		Campus 3 5	09/11 → 10/12		**SU50** (U)	**SU45** (U)	
		RS 3 5	01/00 → 06/06		**SU53** (U)	**SU45** (U)	
	3	3 5	09/05 → 10/14		**SC60** (4C)	**SC40** (4C)	
		Estate	01/08 → 02/13		**SC60** (4C)	**SC40** (4C)	
	4	5	10/12 →		**SC65** (4C)	**SC35** (4C)	**SB24**
		Estate	03/13 →		**SC65** (4C)	**SC35** (4C)	**SB24**
Grand Scenic	4		01/17 →		**SC80** (3A)	**SC70B** (3A)	
Espace	1		07/89 → 02/91		**SU55** (U)	**SU55** (U)	
	5		04/15 →		**SC75** (3A)	**SC70B** (3A)	
Express			10/91 → 1998		**SU45** (U)	**SU45** (U)	
			11/91 →		**SU45** (U)	**SU45** (U)	
Fluence / ZE			01/10 →		**SC60** (4C)	**SC40** (4C)	
Grand Modus			01/08 → 12/13		**SC70** (1B)	**SC65B** (1B)	
Kadjar			06/15 →		**SU65** (U)	**SU40** (U)	
Kangoo	1 / 1 Express		09/97 →		**SU50** (U)	**SU50** (U)	
			09/97 → 06/01		**SU50** (U)	**SU50** (U)	
			07/01 →		**SU50** (U)		
	2		01/08 →		**SC55** (4C)	**SC50** (4C)	
			01/08 →		**SC55** (4C)	**SC50** (4C)	
Koleos			06/08 → 06/15		**SC60** (2A)	**SC48** (2A)	
Laguna	2	5	01/01 → 09/07		**SU60** (U)	**SU50** (U)	
		Estate	01/01 → 12/07		**SU60** (U)	**SU50** (U)	
	3	5	10/07 → 10/15		**SC65** (4C)	**SC40** (4C)	
			10/08 → 10/15		**SC65** (4C)	**SC40** (4C)	
		Estate	01/08 → 10/15		**SC65** (4C)	**SC40** (4C)	
Latitude			01/11 → 12/15		**SU60** (U)	**SU40** (U)	
Master	1		03/89 → 10/97		**SU60** (U)	**SU60** (U)	
	3		04/10 →		**SU65** (U)	**SU65** (U)	
Maxity			2008 →		**SU50** (U)	**SU50** (U)	
Megane	1	5	10/95 → 09/02		**SU55** (U)	**SU50** (U)	
		Classic 4	10/96 → 08/03		**SU55** (U)	**SU50** (U)	
			10/95 → 09/02		**SU55** (U)	**SU50** (U)	
			03/97 → 08/03		**SU55** (U)	**SU50** (U)	
			03/99 → 08/03		**SU55** (U)	**SU50** (U)	
	2	3 5	09/02 → 12/05		**SU60** (U)	**SU45** (U)	
			01/06 → 10/08		**SC60** (4C)	**SC45** (4C)	
		4	06/03 → 12/05		**SU60** (U)	**SU45** (U)	
			01/06 → 12/09		**SC60** (4C)	**SC45** (4C)	
			06/03 → 12/05		**SU60** (U)	**SU45** (U)	
			01/06 → 04/10		**SC60** (4C)	**SC45** (4C)	
			06/03 → 12/05		**SU60** (U)	**SU45** (U)	
			01/06 → 05/09		**SC60** (4C)	**SC45** (4C)	
	3	5	11/08 → 12/15		**SC60** (4C)	**SC40** (4C)	
			01/09 →		**SC60** (4C)	**SC40** (4C)	
		CC	05/10 → 12/15		**SC60** (4C)	**SC40** (4C)	
		Estate	06/09 → 08/16		**SC60** (4C)	**SC40** (4C)	
	4		01/16 →		**SC60** (4C)	**SC45** (4C)	
		Estate	09/16 →		**SC60** (4C)	**SC45** (4C)	
Megane Scenic	1		10/96 → 05/03		**SU60** (U)	**SU40** (U)	
		RX4	03/00 → 12/03		**SU60** (U)	**SU40** (U)	
Modus			09/04 → 12/13		**SC70** (1B)	**SC65B** (1B)	

For/Für			2	– SPOILER – – HBLADE –			
RENAULT (...)							
R19		3 5	07/89 →		**SU50** (U)	**SU50** (U)	
	Chamade		06/89 →		**SU50** (U)	**SU50** (U)	
R21		4	07/89 → 03/94		**SU50** (U)	**SU50** (U)	
		5	07/89 → 03/94		**SU50** (U)	**SU50** (U)	
		Nevada	07/89 → 09/95		**SU50** (U)	**SU50** (U)	
R25			05/89 → 03/92		**SU55** (U)	**SU55** (U)	
Safrane			01/99 →		**SU60** (U)	**SU60** (U)	
Scenic	2		01/05 → 05/09		**SC65** (4C)	**SC55** (4C)	
	3		04/09 →		**SC75** (4C)	**SC65B** (4C)	
		XMOD	04/13 →		**SC75** (4C)	**SC65B** (4C)	
	4		10/16 →		**SC80** (3A)	**SC70B** (3A)	
Super 5			08/89 →		**SU45** (U)	**SU45** (U)	
Symbol / Thalia		4	11/99 → 07/04		**SU53** (U)	**SU45** (U)	
Symbol	3	4	03/13 → 02/15		**SU55** (U)	**SU50** (U)	
		4	03/15 →		**SC55** (4C)	**SC45** (4C)	
Talisman			10/15 →		**SC60** (4C)	**SC45** (4C)	
		Estate	04/16 →		**SC60** (4C)	**SC45** (4C)	
Trafic	1		04/89 → 05/01		**SU50** (U)	**SU50** (U)	
	2		06/01 → 06/14		**SU60** (U)	**SU50** (U)	
			06/01 → 06/14		**SU60** (U)	**SU50** (U)	
	3		07/14 →		**SC65** (3A)	**SC48** (3A)	
			07/14 →		**SC65** (3A)	**SC48** (3A)	
Twingo	1	x1	03/93 → 05/07		**SU65C** (M1)		
	2	3	06/07 → 08/16		**SC60** (3A)	**SC40** (3A)	
	3	5	09/14 →		**SC50** (4C)	**SC35** (4C)	
Wind			09/10 → 12/14		**SC60** (3A)	**SC40** (3A)	
Zoé			12/12 →		**SC60** (3A)	**SC35** (3A)	
ROVER							
Rover 25			01/00 →		**SU45** (U)	**SU45** (U)	
Rover 45			01/00 →		**SU50** (U)	**SU45** (U)	
200-Series			06/84 → 05/96		**SU45** (U)	**SU45** (U)	
			10/92 →		**SU45** (U)	**SU45** (U)	
			03/92 →		**SU45** (U)	**SU45** (U)	
400-Series			03/90 → 08/95		**SU45** (U)	**SU45** (U)	
		4	09/95 →		**SU50** (U)	**SU45** (U)	
		5	09/95 →		**SU50** (U)	**SU45** (U)	
		Tourer	05/93 →		**SU45** (U)	**SU45** (U)	
600-Series			04/93 →		**SU50** (U)	**SU50** (U)	
800-Series		4	06/86 → 12/91		**SU48** (U)	**SU48** (U)	
		5	06/86 → 12/91		**SU48** (U)	**SU48** (U)	
			01/92 →		**SU50** (U)	**SU50** (U)	
			01/92 → 07/95		**SU50** (U)	**SU50** (U)	
Streetwise		3 5	08/03 → 10/05		**SU45** (U)	**SU45** (U)	
ROVER / MG							
MG			03/96 →		**SU50** (U)	**SU50** (U)	
MGF/ TF			03/96 →		**SU50** (U)	**SU50** (U)	
ZR			09/01 →		**SU45** (U)	**SU45** (U)	
ZS			09/01 →		**SU50** (U)	**SU45** (U)	
SAAB							
900			07/93 → 08/02		**SU53** (U)	**SU53** (U)	
			07/94 → 08/02		**SU53** (U)	**SU53** (U)	
			07/94 → 08/02		**SU53** (U)	**SU53** (U)	
9000		4	01/89 →		**SU53** (U)	**SU53** (U)	
		5	01/89 →		**SU53** (U)	**SU53** (U)	
	Aero		01/89 →		**SU53** (U)	**SU53** (U)	
9.3			07/93 → 08/02		**SU53** (U)	**SU53** (U)	
			07/94 → 08/02		**SU53** (U)	**SU53** (U)	
			07/94 → 08/02		**SU53** (U)	**SU53** (U)	
9.5			09/97 → 08/07		**SU58** (U)	**SU58** (U)	
			10/98 → 08/07		**SU58** (U)	**SU58** (U)	
9.7 X			09/06 →		**SU55** (U)	**SU55** (U)	
SANTANA							
Vitara		2 3	1995 →		**SU45** (U)	**SU45** (U)	
SEAT							
Alhambra	1		06/01 → 08/10		**SC70** (1B)	**SC70B** (1B)	

For/Für			2+3	– SPOILER – HBLADE –			
SEAT (...)							
Alhambra	2		09/10 →		**SC70** (3B)	**SC40** (3B)	**SB33** (1R)
Arosa			03/97 → 02/99		**SU48** (U)	**SU48** (U)	
			03/99 →		**SU53** (U)	**SU45** (U)	
Cordoba	1 / -2		11/93 → 09/99		**SU53** (U)	**SU45** (U)	
	2	Vario	09/97 → 09/99		**SU53** (U)	**SU45** (U)	
	3		10/99 → 02/02		**SU53** (U)	**SU45** (U)	
		Vario	10/99 → 03/02		**SU53** (U)	**SU45** (U)	
	4		03/02 → 03/06		**SU53** (U)	**SU45** (U)	
	5		04/06 → 12/09		**SC53** (3A)	**SC48** (3A)	
Ibiza		x1	08/84 → 11/89		**SU45** (U)		
			11/89 → 02/93		**SU48** (U)		
			03/93 → 02/02		**SU53** (U)	**SU45** (U)	
			03/02 → 03/06		**SU53** (U)		
			04/06 → 05/08		**SC53** (3A)	**SC48** (3A)	
	Collector		05/08 → 12/09		**SC53** (3A)	**SC48** (3A)	
		SC 3 5	06/08 → 03/12		**SC60** (3A)	**SC40** (3A)	
			04/12 →		**SC60** (3A)		**SB33** (4S)
		ST	06/10 → 03/12		**SC60** (3A)	**SC40** (3A)	
			04/12 →		**SC60** (3A)		**SB33** (4S)
Inca			07/95 →		**SU53** (U)	**SU45** (U)	
Leon	1		03/00 → 04/06		**SU53** (U)	**SU45** (U)	
	2		09/05 → 04/09		**SC65** (2A)	**SC65B** (2A)	
			05/09 → 12/12		**SC65** (2A)		**SB28** (4S)
	3	5	01/13 →		**SC65** (3B)	**SC40** (3B)	**SB33** (1R)
		SC 3	05/13 →		**SC65** (3B)	**SC40** (3B)	**SB38** (1R)
		ST	01/14 →		**SC65** (3B)	**SC40** (3B)	**SB33** (1R)
		ST X-Perience	01/15 →		**SC65** (3B)	**SC40** (3B)	**SB33** (1R)
Malaga			05/85 →		**SU40** (U)	**SU40** (U)	
Marbella		x1	01/82 →		**SU40** (U)		
Mii			04/12 →		**SC60** (3B)	**SC40** (3B)	**SB24** (1R)
Toledo	1		02/91 → 02/99		**SU50** (U)	**SU50** (U)	
	2		03/99 → 09/04		**SU53** (U)	**SU45** (U)	
	4		09/12 →		**SC60** (3B)	**SC40** (3B)	**SB40** (1R)
SKODA							
Citigo			05/12 →		**SC60** (3B)	**SC40** (3B)	**SB24** (1R)
Exellent			01/92 →		**SU45** (U)	**SU45** (U)	
Fabia	1	3 5	05/00 → 04/07		**SU53** (U)	**SU48** (U)	
		Sedan 4	06/01 → 04/07		**SU53** (U)	**SU48** (U)	
		Combi	12/00 → 12/07		**SU53** (U)	**SU48** (U)	
	2	5	05/07 → 08/13		**SC53** (3A)	**SC53** (3A)	**SB28** (4S)
			09/13 → 10/14		**SC53** (3A)		**SB28** (1R)
		Combi / Scout	01/08 → 12/14		**SC53** (3A)	**SC53** (3A)	**SB40** (4S)
	3	5	11/14 →		**SC60** (3B)	**SC40** (3B)	**SB33** (1R)
		Combi	01/15 →		**SC60** (3B)	**SC40** (3B)	**SB40** (1R)
Favorit			03/88 →		**SU45** (U)	**SU45** (U)	
		Combi	11/90 →		**SU45** (U)	**SU45** (U)	
Felicia			02/95 →		**SU50** (U)	**SU50** (U)	
		Combi	02/95 →		**SU50** (U)	**SU50** (U)	
	Fun		01/97 →		**SU50** (U)	**SU50** (U)	
Forman			11/90 →		**SU50** (U)	**SU50** (U)	
Octavia	1		10/96 → 09/00		**SU53** (U)	**SU48** (U)	
		5	10/00 →		**SU53** (U)	**SU48** (U)	
		Combi	03/98 → 01/05		**SU53** (U)	**SU48** (U)	
	2	5	06/04 → 02/13		**SC60** (1B)	**SC48** (1B)	**SB40** (4S)
		Combi / Scout	02/05 → 05/13		**SC60** (1B)	**SC48** (1B)	**SB40** (4S)
	3	5	03/13 →		**SC60** (3B)	**SC45** (3B)	**SB40** (1R)
		Combi / Scout	06/13 →		**SC60** (3B)	**SC45** (3B)	**SB33** (1R)
Pick-up			01/96 →		**SU50** (U)	**SU50** (U)	
Praktik			06/07 →		**SC53** (3A)	**SC53** (3A)	**SB33** (4S)
Rapid			11/12 →		**SC60** (3B)	**SC40** (3B)	**SB40** (1R)
Rapid Spaceback			10/13 →		**SC60** (3B)	**SC40** (3B)	**SB40** (1R)
Roomster / Scout			07/06 →		**SC53** (3A)	**SC53** (3A)	**SB33** (4S)
Superb	1		04/02 → 01/05		**SC53** (1B)	**SC48** (1B)	
			01/05 → 08/08		**SU53** (U)	**SU50** (U)	
	2		09/08 → 06/15		**SC60** (3A)	**SC45** (3A)	
		Combi	01/10 → 10/15		**SC60** (3A)	**SC45** (3A)	**SB40** (1R)

For/Für				– SPOILER – – HBLADE –			
SKODA (...)							
Superb	3		07/15 →		**SC65** (3B)	**SC45** (3B)	
		Combi	11/15 →		**SC65** (3B)	**SC45** (3B)	**SB40** (1R)
Yeti			09/09 →		**SC60** (3A)	**SC48** (3A)	**SB28** (1R)
SMART (MCC)							
Forfour			05/04 → 12/06		**SU65C** (U)	**SU45** (U)	
		3 5	11/14 →		**SC50** (4C)	**SC35** (4C)	
Fortwo	3		11/14 →		**SC50** (4C)	**SC35** (4C)	
SSANG-YONG							
Actyon / Pick Up Sport / SUT-1			12/06 →		**SU55** (U)	**SU48** (U)	
Family			1993 →		**SU40** (U)	**SU40** (U)	
Instance			10/95 →		**SU50** (U)	**SU50** (U)	
Korando	2		10/96 → 12/08		**SU45** (U)	**SU45** (U)	
	3		01/11 →		**SU60** (U)	**SU40** (U)	
Kyron	M200		10/05 → 09/07		**SU55** (U)	**SU45** (U)	
	2		10/07 →		**SU55** (U)	**SU48** (U)	
Musso			10/94 →		**SU50** (U)	**SU45** (U)	
Rexton 1 & 2 / RX200 / RX290			09/03 →		**SU50** (U)	**SU50** (U)	
Rodius			12/04 → 02/13		**SU60** (U)	**SU45** (U)	
Rodius 2 / Korando Turismo / Stavic			03/13 →		**SU60** (U)	**SU45** (U)	
SUBARU							
BRZ			08/12 →		**SU55** (U)	**SU50** (U)	
E + Wagon / Wagon SDX			1994 →		**SU40** (U)	**SU40** (U)	
Forester	1		09/97 → 01/02		**SU53** (U)	**SU48** (U)	
	2		02/02 → 03/08		**SU55** (U)	**SU48** (U)	
	3		04/08 → 01/13		**SU60** (U)	**SU45** (U)	
	4		02/13 →		**SU65** (U)	**SU40** (U)	
Impreza		4	01/93 → 09/01		**SU53** (U)	**SU45** (U)	
			10/01 → 09/07		**SU55** (U)	**SU40** (U)	
			01/93 → 09/01		**SU53** (U)	**SU45** (U)	
			10/01 → 12/07		**SU55** (U)	**SU40** (U)	
	WRX / STI	5	10/07 → 04/14		**SU60** (U)	**SU40** (U)	
Justy			1990 → 03/96		**SU45** (U)	**SU40** (U)	
			04/96 → 09/03		**SU53** (U)	**SU45** (U)	
	G3X		10/03 → 09/07		**SU48** (U)	**SU45** (U)	
			09/07 → 03/11		**SU50** (U)	**SU40** (U)	
Legacy	1		08/89 → 09/93		**SU50** (U)	**SU45** (U)	
			08/89 → 09/93		**SU50** (U)	**SU45** (U)	
	2		10/93 → 02/99		**SU53** (U)	**SU48** (U)	
			10/93 → 02/99		**SU53** (U)	**SU48** (U)	
	3		03/99 → 08/04		**SU55** (U)	**SU50** (U)	
			03/99 → 08/04		**SU55** (U)	**SU50** (U)	
	4		09/04 → 03/10		**SU60** (U)	**SU45** (U)	
	5		09/10 → 12/14		**SU65** (U)	**SU45** (U)	
	Outback		10/96 → 08/04		**SU53** (U)	**SU48** (U)	
			09/04 → 09/09		**SU60** (U)	**SU45** (U)	
			04/10 → 12/14		**SU65** (U)		
Libero	(E12) / Vanille		09/94 →		**SU40** (U)	**SU40** (U)	
Outback	2		12/00 → 08/04		**SU55** (U)	**SU50** (U)	
	5		02/15 →		**SU65** (U)	**SU40** (U)	
SVX			1992 → 1997		**SU55** (U)	**SU50** (U)	
Trendy			1990 → 1991		**SU45** (U)	**SU45** (U)	
Vivio			03/92 →		**SU48** (U)	**SU35** (U)	
WRX STI		4	10/10 → 04/14		**SU60** (U)	**SU40** (U)	
SUZUKI							
1300			1989 →		**SU50** (U)	**SU40** (U)	
Alto		3 5	01/96 → 08/04		**SU48** (U)	**SU40** (U)	
			09/04 → 06/06		**SU45** (U)	**SU40** (U)	
			01/09 → 12/15		**SU53** (U)	**SU35** (U)	
Baleno		3	04/95 → 2002		**SU50** (U)	**SU45** (U)	
		4	04/95 → 2002		**SU50** (U)	**SU45** (U)	
			10/96 → 2002		**SU50** (U)	**SU45** (U)	
		5	04/16 →		**SU53** (U)	**SU45** (U)	
Carry / Super Carry			1993 →		**SU40** (U)	**SU35** (U)	
Celerio			01/15 →		**SU53** (U)	**SU35** (U)	
Grand Vitara	1	XL7	04/98 → 12/05		**SU48** (U)	**SU48** (U)	

For/Für				– SPOILER – HBLADE –			
SUZUKI (...)							
Grand Vitara	2 / 3	3 5	09/05 → 03/15		SU48 (U)	SU48 (U)	
Ignis		3 5	10/00 → 09/03		SU48 (U)	SU45 (U)	
			10/03 → 01/10		SU48 (U)	SU45 (U)	
Jimny			10/98 →		SU45 (U)	SU40 (U)	
Kizashi			03/11 → 12/14		SU60 (U)	SU50 (U)	
Liana			05/01 → 12/06		SU55 (U)	SU45 (U)	
Swift			07/89 → 02/95		SU50 (U)	SU45 (U)	
		3 5	03/95 → 01/05		SU53 (U)	SU45 (U)	
			03/05 → 08/10		SU53 (U)		
			09/10 →		SU55 (U)	SU40 (U)	
SX4			04/06 → 08/13		SU65C (U)	SU35 (U)	
SX4 Classic			08/13 →		SU65C (U)	SU35 (U)	
SX4 S-Cross			09/13 →		SU65 (U)	SU35 (U)	
Vitara	2	2 3	1995 → 08/05		SU45 (U)	SU45 (U)	
	4	5	03/15 →		SU60 (U)	SU40 (U)	
Wagon R+			03/97 → 04/00		SU50 (U)	SU40 (U)	
			05/00 → 03/08		SU50 (U)	SU45 (U)	
TATA							
Indica		5	08/03 → 2007		SU50 (U)	SU50 (U)	
Indigo		4	09/03 → 2012		SU50 (U)	SU50 (U)	
Safari			2003 →		SU60 (U)	SU50 (U)	
TOYOTA							
Auris	1	3 5	03/07 → 12/12		SU65C (U)	SU40 (U)	
	2	5	01/13 →		SU65 (U)	SU35 (U)	
		Touring Sports	07/13 →		SU65 (U)	SU35 (U)	
Avensis		4	01/98 → 03/03		SU53 (U)	SU45 (U)	
			04/03 → 11/08		SU60 (U)	SU40 (U)	
		5	01/98 → 03/03		SU53 (U)	SU45 (U)	
			04/03 → 11/08		SU60 (U)	SU40 (U)	
		Sport Wagon	01/98 → 03/03		SU53 (U)	SU45 (U)	
			04/03 → 11/08		SU60 (U)	SU40 (U)	
Aygo		x1	06/05 → 05/14		SU65C (M1)		
			06/14 →		SC65 (2A)		
Camry		4	07/91 → 01/00		SU53 (U)	SU48 (U)	
			07/91 →		SU53 (U)	SU48 (U)	
Celica			1990 → 08/94		SU50 (U)	SU45 (U)	
			09/94 → 08/99		SU53 (U)	SU48 (U)	
Corolla		3 5	05/92 → 06/97		SU50 (U)	SU45 (U)	
	Compact	3	07/97 → 12/01		SU50 (U)	SU45 (U)	
		4	05/92 → 01/00		SU50 (U)	SU45 (U)	
		Liftback 5	07/97 → 01/00		SU50 (U)	SU45 (U)	
			02/00 → 12/01		SU53 (U)		
		Sport Wagon	05/92 → 06/97		SU50 (U)	SU45 (U)	
			07/97 → 01/00		SU50 (U)	SU45 (U)	
			02/00 → 09/02		SU53 (U)		
	(E12)	(Made in Europe) 3 5	01/02 → 03/07		SU55 (U)	SU45 (U)	
		(Made in Europe)	10/02 → 03/07		SU55 (U)	SU45 (U)	
Corolla Verso	1		01/02 → 04/04		SU65C (U)	SU40 (U)	
GT86			06/12 →		SU55 (U)	SU50 (U)	
Hi-Lux			08/88 → 09/05		SU45 (U)	SU40 (U)	
			10/05 → 05/16		SU53 (U)	SU48 (U)	
			06/16 →		SU55 (U)	SU40 (U)	
IQ			12/08 → 12/14		SU55 (U)	SU45 (U)	
Land-Cruiser			02/90 → 07/96		SU45 (U)	SU45 (U)	
	90 (J9)	~~Station Wagon~~ 3 5	08/96 → 12/02		SU48 (U)	SU45 (U)	
	(120 VXE)	3 5	01/03 → 12/09		SU55 (U)	SU53 (U)	
	(120 / 125)	~~VXE~~ 3 5	01/03 → 12/09		SU55 (U)	SU53 (U)	
	(HDJ80)	Station Wagon	08/96 → 03/98		SU45 (U)	SU45 (U)	
	(HDJ100)	Station Wagon	04/98 → 11/07		SU50 (U)	SU50 (U)	
	(HDJ200)	SW	09/07 →		SU60 (U)	SU55 (U)	
	500		01/01 → 11/07		SU60 (U)	SU55 (U)	
MR2			01/90 →		SU50 (U)	SU48 (U)	
Paseo / Cynos			03/96 → 07/99		SU50 (U)	SU45 (U)	
			09/96 → 07/99		SU50 (U)	SU45 (U)	
Prius	1		12/00 → 02/04		SU60 (U)	SU40 (U)	
	2		03/04 → 06/09		SU65C (U)	SU40 (U)	

For/Für			2	SPOILER – HBLADE			
TOYOTA (...)							
Prius	3		07/09 → 02/16		**SU65** (U)	**SU40** (U)	
Prius +			06/12 →		**SU70** (U)	**SU35** (U)	
Proace	1		01/14 → 08/16		**SU65** (U)	**SU50** (U)	
			01/14 → 08/16		**SU65** (U)	**SU50** (U)	
Proace / Proace Verso	2		09/16 →		**SC65** (4C)	**SC50** (4C)	
			09/16 →		**SC65** (4C)	**SC50** (4C)	
Rav 4	Funcruiser		04/94 → 07/00		**SU50** (U)	**SU45** (U)	
			08/00 → 02/06		**SU60** (U)	**SU48** (U)	
			03/06 → 03/13		**SU60** (U)	**SU40** (U)	
Starlet			05/96 →		**SU50** (U)	**SU40** (U)	
Supra			1993 →		**SU53** (U)	**SU50** (U)	
Urban Cruiser			03/09 → 10/13		**SU60** (U)	**SU35** (U)	
Verso			06/09 →		**SU65** (U)	**SU40** (U)	
Yaris	1	(Made in France)	02/01 → 12/05		**SU50** (U)	**SU40** (U)	
		(Made in Japan)	04/99 → 12/05		**SU50** (U)	**SU40** (U)	
	2		01/06 → 08/11		**SU60** (U)	**SU35** (U)	
			01/06 → 08/11		**SU60** (U)	**SU35** (U)	
Yaris Verso			11/99 → 02/11		**SU55** (U)	**SU40** (U)	
VOLKSWAGEN							
Amarok			09/12 →		**SC60** (3B)	**SC60** (3B)	
Beetle / New Beetle	2		12/11 →		**SC55** (3B)	**SC55** (3B)	
			03/13 →		**SC55** (3B)	**SC55** (3B)	
Bora			10/98 → 06/02		**SU53** (U)	**SU48** (U)	
			07/02 → 08/05		**SC53** (1B)	**SC45** (1B)	
			05/99 → 06/02		**SU53** (U)	**SU48** (U)	
			07/02 → 08/05		**SC53** (1B)	**SC45** (1B)	
Caddy	1		08/82 → 07/92		**SU40** (U)	**SU40** (U)	
	2		09/96 → 01/04		**SU53** (U)	**SU45** (U)	
		Pick-Up	01/96 → 12/00		**SU53** (U)	**SU45** (U)	
	3	Caddy Life	04/04 → 08/10		**SC60** (1B)	**SC45** (1B)	**SB40** (4S)
		Caddy Life	04/04 → 08/10		**SC60** (1B)	**SC45** (1B)	
		Caddy Life	03/07 → 08/10		**SC60** (3A)	**SC45** (3A)	**SB40** (4S)
		Caddy Life	03/07 → 08/10		**SC60** (3A)	**SC45** (3A)	
	4	Caddy/ Caddy Maxi/ Cross Caddy	09/10 → 06/15		**SC60** (3A)	**SC45** (3A)	**SB40** (4S)
		Caddy Van/ Maxi Van	09/10 → 06/15		**SC60** (3A)	**SC45** (3A)	
	5	Caddy/ Caddy Maxi/ Cross Caddy	07/15 →		**SC60** (3A)	**SC45** (3A)	**SB40** (1R)
		Caddy/ Caddy Van/ Maxi Van	07/15 →		**SC60** (3A)	**SC45** (3A)	
		Alltrack	12/15 →		**SC60** (3A)	**SC45** (3A)	**SB40** (1R)
Caravelle			09/90 →		**SU53** (U)	**SU53** (U)	
CC			01/12 →		**SC60** (3B)	**SC45** (3B)	
Coccinelle			12/11 →		**SC55** (3B)	**SC55** (3B)	
			03/13 →		**SC55** (3B)	**SC55** (3B)	
Corrado			09/88 →		**SU48** (U)	**SU48** (U)	
Crafter			06/06 →		**SC65** (2A)	**SC60** (2A)	**SB43** (2R)
Derby			01/77 → 10/84		**SU40** (U)	**SU40** (U)	
Eos			02/06 →		**SC60** (3A)	**SC48** (3A)	
Fox			06/05 → 12/11		**SU53** (U)	**SU35** (U)	
Golf	1		02/74 → 07/83		**SU40** (U)	**SU40** (U)	
			02/79 → 08/93		**SU40** (U)	**SU40** (U)	
	2	C / CL / GL	08/83 → 10/91		**SU40** (U)	**SU40** (U)	
		GT / GTD / GTI / GLX	08/83 → 10/91		**SU45** (U)	**SU45** (U)	
	3		11/91 → 10/97		**SU53** (U)	**SU45** (U)	
			09/93 → 06/02		**SU53** (U)	**SU45** (U)	
			09/93 → 04/99		**SU53** (U)	**SU45** (U)	
	4		11/97 → 06/02		**SU53** (U)	**SU48** (U)	
			07/02 → 10/03		**SC53** (1B)	**SC45** (1B)	
			05/99 → 06/02		**SU53** (U)	**SU48** (U)	
			07/02 → 08/05		**SC53** (1B)	**SC45** (1B)	
	5	Plus	11/03 → 11/05		**SC60** (1B)	**SC48** (1B)	**SB33** (4S)
			12/05 → 09/08		**SC60** (3A)	**SC48** (3A)	**SB33** (4S)
		GT	10/05 → 09/08		**SC60** (3A)	**SC48** (3A)	**SB33** (4S)
		SW	06/07 → 09/09		**SC60** (3A)	**SC48** (3A)	**SB33** (4S)
	6		10/08 → 10/12		**SC60** (3A)	**SC48** (3A)	**SB28** (1R)
			06/11 →		**SC60** (3B)	**SC48** (3B)	
		SW	10/09 → 07/13		**SC60** (3A)	**SC48** (3A)	**SB33** (4S)
	7		11/12 →		**SC65** (3B)	**SC45** (3B)	**SB28** (1R)

For/Für			2+3	SPOILER – HBLADE –			
VOLKSWAGEN (...)							
Golf	7	GTI / GTD / GTE / R 3 5	03/13 →		**SC65** (3B)	**SC45** (3B)	**SB28** (1R)
		Variant / SW	08/13 →		**SC65** (3B)	**SC45** (3B)	**SB28** (1R)
		Alltrack	04/15 →		**SC65** (3B)	**SC45** (3B)	**SB28** (1R)
Golf Plus / Cross Golf			03/05 → 03/09		**SC70** (1B)	**SC70B** (1B)	**SB33** (4S)
			04/09 → 03/14		**SC70** (1B)		**SB33** (1R)
Golf Sportsvan			06/14 →		**SC70** (3B)	**SC40** (3B)	**SB28** (1R)
Jetta	1 / -2		08/79 →		**SU40** (U)	**SU40** (U)	
		GT / TD	01/84 →		**SU45** (U)	**SU45** (U)	
	3		09/05 → 06/06		**SC60** (1B)	**SC48** (1B)	
			12/05 → 12/10		**SC60** (3A)	**SC48** (3A)	
	4		01/11 →		**SC60** (3B)	**SC48** (3B)	
Kleinbus					**SU45** (U)	**SU45** (U)	
LT28...55			07/82 → 08/96		**SU48** (U)	**SU48** (U)	
LT			09/96 → 06/06		**SU60** (U)	**SU55** (U)	
Lupo			10/98 → 06/05		**SU53** (U)	**SU45** (U)	
		GTI	11/00 → 06/05		**SC48** (1B)	**SC48** (1B)	
Multivan / California	T4		09/90 → 05/03		**SU53** (U)	**SU53** (U)	
	T5		06/03 → 01/13		**SC60** (1B)	**SC60** (1B)	**SB40** (4S)
			06/03 → 01/13		**SC60** (1B)	**SC60** (1B)	**SB43** (4S)
			01/08 → 08/13		**SU60** (U)	**SU55** (U)	**SB40** (4S)
			01/08 → 08/13		**SU60** (U)	**SU55** (U)	**SB43** (4S)
			09/13 → 07/15		**SC60** (3B)	**SC60** (3B)	**SB40** (4S)
			09/13 → 07/15		**SC60** (3B)	**SC60** (3B)	**SB43** (4S)
	T6		08/15 →		**SC60** (3B)	**SC60** (3B)	**SB40** (1R)
			08/15 →		**SC60** (3B)	**SC60** (3B)	**SB43** (4S)
Passat	1	4	05/73 → 08/80		**SU40** (U)	**SU40** (U)	
		Variant	05/73 → 08/80		**SU40** (U)	**SU40** (U)	
	2	4	09/80 → 03/88		**SU45** (U)	**SU45** (U)	
		Variant	09/80 → 03/88		**SU45** (U)	**SU45** (U)	
	3 / -4	4	04/88 → 09/96		**SU53** (U)	**SU53** (U)	
		Variant	04/88 → 04/97		**SU53** (U)	**SU53** (U)	
	5		09/01 → 02/05		**SC53** (1B)	**SC48** (1B)	
		4	10/96 → 05/02		**SU53** (U)	**SU50** (U)	
			06/02 → 02/05		**SC53** (1B)	**SC48** (1B)	
		Variant	05/97 → 05/02		**SU53** (U)	**SU50** (U)	
			06/02 → 08/05		**SC53** (1B)	**SC48** (1B)	
	6	4	03/05 → 10/10		**SC60** (3A)	**SC48** (3A)	
		Variant/ SW	09/05 → 10/10		**SC60** (3A)	**SC48** (3A)	**SB28** (4S)
	7	4	11/10 → 08/11		**SC60** (3A)	**SC45** (3A)	
			09/11 → 10/14		**SC60** (3B)	**SC45** (3B)	
		Variant/ SW	11/10 → 08/11		**SC60** (3A)	**SC45** (3A)	**SB28** (4S)
			09/11 → 10/14		**SC60** (3B)	**SC45** (3B)	**SB28** (4S)
		Alltrack	03/12 → 04/15		**SC60** (3B)	**SC45** (3B)	**SB28** (4S)
	8		11/14 →		**SC65** (3B)	**SC48** (3B)	
		Variant/ SW	11/14 →		**SC65** (3B)	**SC48** (3B)	**SB33** (1R)
		Alltrack	05/15 →		**SC65** (3B)	**SC48** (3B)	**SB33** (1R)
		CC	05/08 → 02/12		**SC60** (3A)	**SC45** (3A)	
Polo	1	3 5	08/75 → 10/81		**SU40** (U)	**SU40** (U)	
	2	3	11/81 → 06/94		**SU40** (U)	**SU40** (U)	
		4	11/81 → 06/94		**SU40** (U)	**SU40** (U)	
			08/82 → 06/94		**SU40** (U)	**SU40** (U)	
	3	Flight / Classic 4	09/95 →		**SU53** (U)	**SU45** (U)	
		Variant	09/97 →		**SU53** (U)	**SU45** (U)	
	4		11/01 → 09/02		**SC53** (1B)	**SC43** (1B)	
			10/02 → 06/05		**SC53** (1B)		**SB33** (4S)
Polo / Cross Polo	5		07/05 → 08/09		**SC53** (3A)	**SC48** (3A)	**SB33** (4S)
Polo	5	TDI /GTI Limited Edition	03/07 → 08/09		**SC53** (3A)	**SC48** (3A)	**SB28** (4S)
Polo / Cross Polo	6		09/09 →		**SC60** (3B)	**SC40** (3B)	**SB28** (1R)
Santana			08/81 → 03/88		**SU45** (U)	**SU45** (U)	
Scirocco			04/74 → 03/81		**SU45** (U)	**SU45** (U)	
			04/81 → 07/92		**SU48** (U)	**SU48** (U)	
			09/08 →		**SC60** (3A)	**SC48** (3A)	**SB24** (1R)
Sharan	1		06/01 → 08/10		**SC70** (1B)	**SC70B** (1B)	
	2		09/10 →		**SC70** (3B)	**SC40** (3B)	**SB33** (1R)
Tiguan	1		11/07 → 05/16		**SC60** (3A)	**SC50** (3A)	**SB33** (4S)
	2		06/16 →		**SC60** (3B)	**SC55** (3B)	
Touareg	1		02/02 → 03/10		**SC65** (1B)	**SC65** (1B)	**SB33** (4S)

For/Für				SPOILER – HBLADE			
VOLKSWAGEN (...)							
Touareg	2		04/10 →		**SC65** (1B)	**SC65** (1B)	**SB33** (3T)
Touran	1		05/03 → 08/03		**SC70** (1B)	**SC70B** (1B)	
			09/03 → 08/10		**SC70** (1B)		**SB40** (4S)
			03/06 → 11/06		**SC60** (1B)	**SC45** (1B)	**SB40** (4S)
Touran / CrossTouran	1		12/06 → 08/10		**SC60** (3A)	**SC45** (3A)	**SB40** (4S)
	2		09/10 → 08/15		**SC60** (3A)	**SC45** (3A)	**SB33** (1R)
Touran	3		09/15 →		**SC70** (3B)	**SC40** (3B)	**SB28** (1R)
Transporter	T3		05/79 → 08/90		**SU45** (U)	**SU45** (U)	
	T4		09/90 → 12/03		**SU53** (U)	**SU53** (U)	
	T5		11/03 → 08/13		**SU60** (U)	**SU55** (U)	**SB40** (4S)
			11/03 → 08/13		**SU60** (U)	**SU55** (U)	**SB43** (4S)
			09/13 → 07/15		**SC60** (3B)	**SC60** (3B)	**SB40** (4S)
			09/13 → 07/15		**SC60** (3B)	**SC60** (3B)	**SB43** (4S)
	T6		08/15 →		**SC60** (3B)	**SC60** (3B)	**SB40** (1R)
			08/15 →		**SC60** (3B)	**SC60** (3B)	**SB43** (4S)
Up / Cross Up / Eco Up			01/12 →		**SC60** (3B)	**SC40** (3B)	**SB24** (1R)
Vento			11/91 → 09/98		**SU53** (U)	**SU45** (U)	
VOLVO							
240			02/82 →		**SU40** (U)	**SU40** (U)	
			09/82 →		**SU40** (U)	**SU40** (U)	
440			10/88 →		**SU53** (U)	**SU53** (U)	
460			01/90 →		**SU53** (U)	**SU53** (U)	
480			07/86 →		**SU53** (U)	**SU50** (U)	
740			01/82 → 06/84		**SU48** (U)	**SU48** (U)	
			07/84 →		**SU50** (U)	**SU50** (U)	
			07/85 →		**SU50** (U)	**SU50** (U)	
760			07/83 → 07/87		**SU50** (U)	**SU50** (U)	
			08/87 → 12/90		**SU53** (U)		
			07/86 → 07/87		**SU50** (U)	**SU50** (U)	
			08/87 → 12/90		**SU53** (U)		
780			03/85 →		**SU50** (U)	**SU50** (U)	
			03/85 →		**SU50** (U)	**SU50** (U)	
850			06/91 →		**SU53** (U)	**SU50** (U)	
			12/92 → 03/00		**SU53** (U)	**SU50** (U)	
940			09/90 →		**SU50** (U)	**SU50** (U)	
			09/90 →		**SU50** (U)	**SU50** (U)	
960			09/90 →		**SU53** (U)	**SU50** (U)	
			09/90 →		**SU53** (U)	**SU50** (U)	
C30			11/06 → 06/09		**SC65** (3A)	**SC50** (3A)	**SB40**
			07/09 → 12/13		**SC65** (3A)		
	E (environnemental)		10/08 → 12/13		**SC65** (3A)	**SC50** (3A)	
C70			09/96 → 01/06		**SU53** (U)	**SU50** (U)	
			1999 → 01/06		**SU53** (U)	**SU50** (U)	
			03/06 → 12/13		**SC65** (3A)	**SC48** (3A)	
S40			04/96 → 01/04		**SU53** (U)	**SU50** (U)	
			02/04 → 02/06		**SC65** (1B)	**SC50** (1B)	
			03/06 → 08/12		**SC65** (3A)	**SC50** (3A)	
S60			11/00 → 02/04		**SU60** (U)	**SU53** (U)	
			03/04 → 06/10		**SC60** (2A)	**SC53** (2A)	
			07/10 →		**SC65** (3A)	**SC50** (3A)	
S70			06/91 →		**SU53** (U)	**SU50** (U)	
S80			10/98 → 05/03		**SU60** (U)	**SU53** (U)	
			06/03 → 05/06		**SC60** (2A)	**SC53** (2A)	
			06/06 → 08/16		**SC65** (3A)	**SC50** (3A)	
S90			09/90 →		**SU53** (U)	**SU50** (U)	
V40			06/96 → 03/04		**SU53** (U)	**SU50** (U)	
			07/12 →		**SC65** (3A)	**SC48** (3A)	
	Cross Country		01/13 →		**SC65** (3A)	**SC48** (3A)	
V50			03/04 → 02/06		**SC65** (1B)	**SC50** (1B)	
			03/06 → 12/12		**SC65** (3A)	**SC50** (3A)	
V60			11/10 →		**SC65** (3A)	**SC50** (3A)	
	Cross Country		06/15 →		**SC65** (3A)	**SC50** (3A)	
V70			04/00 → 02/04		**SU60** (U)	**SU53** (U)	
			04/04 → 09/07		**SC60** (2A)	**SC53** (2A)	
			10/07 → 08/16		**SC65** (3A)	**SC50** (3A)	**SB33**
			12/92 → 03/00		**SU53** (U)	**SU50** (U)	**SB33**

For/Für				– SPOILER – – HBLADE –			
VOLVO (...)							
V70XC			09/00 → 02/04		**SU60** (U)	**SU53** (U)	
V90			09/90 →		**SU53** (U)	**SU50** (U)	
XC60			09/08 →		**SC65** (3A)	**SC50** (3A)	**SB38**
XC70			03/04 → 09/07		**SC60** (2A)	**SC53** (2A)	
			10/07 → 08/16		**SC65** (3A)	**SC50** (3A)	**SB33**
XC90			01/03 → 04/04		**SU60** (U)	**SU53** (U)	
			05/04 → 05/07		**SC60** (2A)	**SC55** (2A)	
			06/07 → 12/10		**SC60** (2A)		**SB38**
YUGO							
Florida		x1	09/90 →		**SU45** (U)		
Sana			1989 →		**SU48** (U)	**SU40** (U)	
ZASTAVA							
Florida		x1	09/90 →		**SU48** (U)		
ZAZ							
Tavria		x1	07/92 → 12/95		**SU53** (U)		

3

IAM → SWF

Bosch Aerofit

3 397 014 187	AF 502	262204	SC45
3 397 009 848	AF 480	262205	SC48
3 397 014 187	AF 502	262206	SC50
3 397 014 191	AF 552	262251	SU40
3 397 014 187	AF 502	262252	SU45
3 397 009 848	AF 480	262253	SU48
3 397 014 187	AF 502	262254	SU50
3 397 014 189	AF 531	262255	SU53
3 397 014 191	AF 552	262256	SU55
3 397 014 192	AF 554	262256	SU55
3 397 014 196	AF 602	262256	SU55
3 397 014 191	AF 552	262257	SU55B
3 397 014 193	AF 601	262259	SU60
3 397 014 198	AF 655	262260	SU65
3 397 014 198	AF 655	262261	SU65B
3 397 014 198	AF 655	262262	SU65C
3 397 014 190	AF 532	262255	SU53
3 397 014 188	AF 534	262255	SU53
3 397 014 189	AF 531	262252	SU45
3 397 014 190	AF 532	262254	SU50
3 397 014 192	AF 554	262257	SU55B
3 397 014 192	AF 554	262253	SU48
3 397 014 196	AF 602	262259	SU60
3 397 014 194	AF 604	262259	SU60
3 397 014 195	AF 607	262259	SU60
3 397 014 193	AF 601	262251	SU40
3 397 014 196	AF 602	262257	SU55B
3 397 014 194	AF 604	262252	SU45
3 397 014 195	AF 607	262253	SU48

Bosch Aerotwin

3 397 006 803	AR 707 U	262263	SU70
3 397 006 827	AP 13 U	262200	SC35
3 397 006 828	AP 15 U	262201	SC38
3 397 006 829	AP 16 U	262202	SC40
3 397 006 830	AP 17 U	262203	SC43
3 397 006 831	AP 18 U	262204	SC45
3 397 006 832	AP 19 U	262205	SC48
3 397 006 833	AP 20 U	262206	SC50
3 397 006 834	AP 21 U	262207	SC53
3 397 006 835	AP 22 U	262208	SC55
3 397 006 835	AP 22 U	262209	SC55B
3 397 006 836	AP 23 U	262210	SC58
3 397 006 837	AP 24 U	262211	SC60
3 397 006 837	AP 24 U	262212	SC60B
3 397 006 838	AP 26 U	262213	SC65
3 397 006 838	AP 26 U	262214	SC65B
3 397 006 839	AP 28 U	262215	SC70
3 397 006 839	AP 28 U	262216	SC70B
3 397 006 840	AP 30 U	262217	SC75
3 397 006 840	AP 30 U	262218	SC75B
3 397 006 841	AP 32 U	262219	SC80
3 397 008 930	AR 340 U	262250	SU35
3 397 008 932	AR 400 U	262251	SU40
3 397 008 933	AR 450 U	262252	SU45
3 397 008 934	AR 480 U	262253	SU48
3 397 008 935	AR 500 U	262254	SU50
3 397 008 936	AR 530 U	262255	SU53
3 397 008 937	AR 550 U	262256	SU55
3 397 008 937	AR 550 U	262257	SU55B
3 397 008 938	AR 600 U	262259	SU60
3 397 008 939	AR 650 U	262260	SU65
3 397 008 939	AR 650 U	262261	SU65B
3 397 008 939	AR 650 U	262262	SU65C
3 397 008 940	AR 580 U	262258	SU58

Champion Aerovantage

AFL35/B01	AFL35	262200	SC35
AFL38/B01	AFL38	262201	SC38
AFL40/B01	AFL40	262202	SC40
AFL43/B01	AFL43	262203	SC43
AFL45/B01	AFL45	262204	SC45
AFL48/B01	AFL48	262205	SC48
AFL50/B01	AFL50	262206	SC50
AFL53/B01	AFL53	262207	SC53
AFL55/B01	AFL55	262208	SC55
AFL55/B01	AFL55	262209	SC55B
AFL58/B01	AFL58	262210	SC58
AFL60/B01	AFL60	262211	SC60
AFL60/B01	AFL60	262212	SC60B
AFL65/B01	AFL65	262213	SC65
AFL65/B01	AFL65	262214	SC65B
AFL70/B01	AFL70	262215	SC70
AFL70/B01	AFL70	262216	SC70B
AFL75/B01	AFL75	262217	SC75
AFL75/B01	AFL75	262218	SC75B
AFL80/B01	AFL80	262219	SC80

OES → SWF

ALFA ROMEO

50516542	262210	SC58
50516543	262204	SC45

AUDI

3A1955425	262207	SC53
3A1955427	262254	SU50
3A1955427	262255	SU53
4G9955425	262235	SB40
4L0955425	262234	SB38
8K9955425	262235	SB40
8R0955425	262232	SB31
8U1955425	262211	SC60
8U1955426	262206	SC50
8V1955425	262211	SC60
8V1955425	262213	SC65
8V1955426	262204	SC45
8V1955426	262205	SC48
8X3955425	262232	SB31
8X3955425	262234	SB38
8X4955425	262232	SB31
8X4955425	262234	SB38
4A0955425A	262256	SU55
4A0955425B	262255	SU53
4G1955425A	262211	SC60
4L1955425B	262213	SC65
4L1955426A	262206	SC50
8F1955426A	262207	SC53
8J1955425A	262208	SC55
8J1955425A	262211	SC60
8J1955426A	262206	SC50
8J1955426A	262207	SC53
8K1955425A	262211	SC60
8K1955426A	262206	SC50
8P1955425H	262211	SC60
8P1955426F	262204	SC45
8P1955426H	262205	SC48
8R1955425B	262211	SC60
8R1955426B	262206	SC50
8X1955425A	262211	SC60
8X1955426A	262201	SC38

BMW

61 61 0 396 417	262205	SC48
61 61 1 387 678	262254	SU50
61 61 7 004 901	262254	SU50
61 61 7 198 668	262211	SC60
61 61 8 353 289	262255	SU53
61 61 9 071 613	262258	SU58
61 62 2 588 277	262233	SB33
61 62 2 990 035	262233	SB33
61 62 7 138 508	262231	SB28
61 62 7 140 959	262255	SU53
61 62 7 161 029	262234	SB38
61 62 7 213 241	262233	SB33
61 62 7 356 223	262233	SB33
61 62 7 366 060	262231	SB28

CITROEN

6423 06	262255	SU53
16 131 570 80	262215	SC70
6423 38	262209	SC55B
6423 49	262202	SC40
6423 70	262219	SC80
6423 71	262218	SC75B
6423 J2	262211	SC60
6423 J3	262202	SC40
6423 99	262215	SC70
6423 A0	262212	SC60B
16 131 600 80	262211	SC60
6423 J3	262202	SC40
16 131 600 80	262211	SC60
6423 J3	262202	SC40
6423 J2	262211	SC60
6423 J2	262202	SC40
16 131 567 80	262217	SC75
16 131 566 80	262214	SC65B
6423 J2	262211	SC60
6423 J3	262202	SC40
6423 J3	262202	SC40
6423 K7	262213	SC65
6423 K7	262262	SU65C
6423 L9	262254	SU50
6423 L9	262256	SU55
6426 PC	262219	SC80
6426 PE	262218	SC75B
6426 SJ	262211	SC60
6426 SJ	262259	SU60
6426 SS	262252	SU45
6426 ZE	262213	SC65
6426 ZE	262260	SU65
6426 YQ	262204	SC45
6426 YQ	262252	SU45
6426 ZE	262213	SC65
6426 ZE	262214	SC65B
6426 ZE	262260	SU65
6426 ZE	262214	SC65B
16 080 286 80	262259	SU60
16 080 287 80	262255	SU53
16 131 569 80	262219	SC80
16 131 568 80	262218	SC75B
16 113 455 80	262211	SC60
16 113 455 80	262259	SU60
16 113 461 80	262252	SU45
16 113 480 80	262213	SC65
16 113 480 80	262262	SU65C
16 113 484 80	262202	SC40
16 113 484 80	262202	SC40
16 113 485 80	262204	SC45
16 113 485 80	262252	SU45
16 113 491 80	262211	SC60
16 113 492 80	262213	SC65
16 113 495 80	262219	SC80

OES → SWF

CITROEN (...)

16 113 524 80	262259	SU60
16 113 525 80	262255	SU53
16 113 543 80	262215	SC70
16 115 580 80	262218	SC75B
16 131 569 80	262219	SC80
16 115 875 80	262209	SC55B
16 115 878 80	262214	SC65B
16 115 880 80	262218	SC75B
16 116 611 80	262219	SC80
16 116 612 80	262218	SC75B
16 124 324 80	262213	SC65
16 124 324 80	262262	SU65C
16 131 565 80	262213	SC65
16 131 566 80	262214	SC65B
16 131 567 80	262217	SC75
16 131 568 80	262218	SC75B
16 131 568 80	262218	SC75B
16 131 569 80	262219	SC80
16 131 569 80	262219	SC80
16 131 570 80	262215	SC70
16 131 600 80	262211	SC60
16 132 915 80	262259	SU60
16 132 916 80	262259	SU60

FORD

1105307	262255	SU53
1132443	262256	SU55
1148887	262253	SU48
1148889	262254	SU50
1148900	262255	SU53
1363354	262213	SC65
1373656	262215	SC70
1373657	262215	SC70
1554028	262211	SC60
1554028	262259	SU60
1554033	262200	SC35
1554033	262250	SU35
1680479	262203	SC43
1680479	262205	SC48
1680491	262213	SC65
1680496	262214	SC65B
1680497	262217	SC75
1680499	262205	SC48
1680504	262203	SC43
1680506	262213	SC65
1680508	262203	SC43
1680510	262217	SC75
1680511	262213	SC65
1680513	262211	SC60
1680579	262202	SC40
1680581	262213	SC65
1694733	262201	SC38
1694734	262202	SC40
1694736	262205	SC48
1694740	262211	SC60
1694741	262213	SC65
1694741	262214	SC65B
1694742	262215	SC70
1694742	262217	SC75
1698010	262215	SC70
1712818	262256	SU55
1712819	262251	SU40
1714323	262253	SU48
1714579	262254	SU50
1726283	262213	SC65
1729464	262211	SC60
1729464	262259	SU60
1729466	262200	SC35
1729466	262250	SU35
1769707	262216	SC70B
1769709	262217	SC75
1786560	262215	SC70
1786573	262215	SC70
1786576	262212	SC60B
1829009	262217	SC75
1829012	262218	SC75B
1840436	262215	SC70
1840437	262201	SC38
1850101	262201	SC38
1850102	262202	SC40
1850109	262213	SC65
1850110	262216	SC70B
1850111	262217	SC75
1850112	262251	SU40
1850119	262256	SU55
1852939	262206	SC50
1853024	262217	SC75
1880029	262217	SC75
1880030	262206	SC50
1882419	262201	SC38
1916360	262217	SC75
1916366	262218	SC75B
4658576	262253	SU48
4658600	262256	SU55
5101217	262231	SB28
5176786	262215	SC70
5176822	262216	SC70B
5277044	262206	SC50
5277057	262208	SC55
5324649	262231	SB28
5324650	262231	SB28
5339417	262233	SB33

PEUGEOT

6423 21	262217	SC75
6423 22	262214	SC65B
6423 F1	262214	SC65B
6423 F1	262261	SU65B
6423 F3	262212	SC60B
6423 F4	262260	SU65
6423 F5	262251	SU40

OES → SWF

PEUGEOT (...)

6423 G8	262262	SU65C
6423 H0	262251	SU40
6423 P0	262208	SC55
6426 HT	262254	SU50
6426 HW	262256	SU55
6426 S4	262213	SC65
6426 S4	262256	SU55
6426 V5	262260	SU65
6426 YV	262213	SC65
6426 YW	262203	SC43
16 087 387 80	262215	SC70
16 087 387 80	262216	SC70B
16 106 725 80	262211	SC60
16 106 726 80	262204	SC45
16 113 454 80	262256	SU55
16 113 456 80	262260	SU65
16 113 460 80	262251	SU40
16 113 463 80	262254	SU50
16 113 465 80	262208	SC55
16 113 465 80	262213	SC65
16 113 480 80	262260	SU65
16 113 480 80	262262	SU65C
16 113 484 80	262202	SC40
16 113 484 80	262203	SC43
16 113 492 80	262213	SC65
16 113 494 80	262217	SC75
16 113 542 80	262216	SC70B
16 113 543 80	262215	SC70
16 113 543 80	262263	SU70
16 115 877 80	262212	SC60B
16 115 878 80	262214	SC65B
16 115 878 80	262214	SC65B
16 115 878 80	262261	SU65B
16 124 323 80	262213	SC65
16 131 580 80	262202	SC40
16 131 581 80	262211	SC60
16 131 581 80	262213	SC65
16 131 582 80	262214	SC65B
16 133 195 80	262215	SC70
16 133 195 80	262263	SU70

RENAULT

77 01 038 296	262204	SC45
77 01 038 296	262252	SU45
77 01 046 135	262255	SU53
77 01 049 049	262211	SC60
77 01 049 049	262259	SU60
77 01 049 050	262254	SU50
77 01 056 011	262213	SC65
77 01 056 012	262208	SC55
77 01 057 639	262214	SC65B
77 01 057 641	262215	SC70
77 01 061 593	262211	SC60
77 01 061 597	262202	SC40
77 01 061 772	262213	SC65
77 01 061 774	262208	SC55
77 01 063 735	262204	SC45
77 01 063 735	262252	SU45
77 01 068 753	262208	SC55
77 01 068 755	262206	SC50
77 11 170 183	262211	SC60
77 11 170 183	262259	SU60
77 11 172 851	262252	SU45
77 11 172 852	262255	SU53
77 11 172 853	262254	SU50
77 11 172 854	262256	SU55
82 01 334 533	262211	SC60
28 79 097 86R	262230	SB24
28 89 000 01R	262202	SC40
28 89 000 03R	262213	SC65
28 89 001 45R	262206	SC50
28 89 004 32R	262213	SC65
28 89 004 64R	262208	SC55
28 89 004 64R	262256	SU55
28 89 006 49R	262211	SC60
28 89 006 49R	262251	SU40
28 89 011 58R	262254	SU50
28 89 013 10R	262200	SC35
28 89 013 46R	262213	SC65
28 89 014 21R	262214	SC65B
28 89 024 84R	262217	SC75
28 89 025 93R	262211	SC60
28 89 028 29R	262204	SC45
28 89 028 29R	262259	SU60
28 89 032 11R	262204	SC45
28 89 032 11R	262254	SU50
28 89 032 53R	262216	SC70B
28 89 040 87R	262211	SC60
28 89 048 82R	262205	SC48
28 89 04E H0A	262251	SU40
28 89 04E H1A	262260	SU65
28 89 052 14R	262211	SC60
28 89 053 51R	262200	SC35
28 89 055 91R	262211	SC60
28 89 056 15R	262202	SC40
28 89 057 55R	262202	SC40
28 89 062 25R	262260	SU65
28 89 065 24R	262217	SC75
28 89 072 61R	262202	SC40
28 89 073 32R	262211	SC60
28 89 077 39R	262204	SC45
28 89 077 41R	262259	SU60
28 89 078 36R	262205	SC48
28 89 078 68R	262205	SC48
28 89 079 53R	262251	SU40
28 89 080 41R	262211	SC60
28 89 086 30R	262214	SC65B
28 89 086 30R	262215	SC70
28 89 092 70R	262211	SC60
28 89 096 90R	262202	SC40
28 89 098 71R	262200	SC35

OES → SWF

RENAULT (...)

28 89 542 76R	262213	SC65
28 8B 577 52R	262200	SC35

VOLKSWAGEN

517998002	262202	SC40
517998002	262215	SC70
561955425	262213	SC65
561955426	262205	SC48
1H0955427	262252	SU45
3A1955425	262207	SC53
3A1955425	262255	SU53
3A1955427	262207	SC53
3A1955427	262255	SU53
3G1998002	262205	SC48
3G1998002	262213	SC65
5G1998002	262204	SC45
5G1998002	262213	SC65
5K1955425	262211	SC60
5K1955426	262205	SC48
6K1955427	262207	SC53
6R1998002	262202	SC40
6R1998002	262211	SC60
8D1955427	262205	SC48
8D1955427	262254	SU50
357955425D	262255	SU53
1H0955425D	262252	SU45
1J1955425B	262207	SC53
1J1955425B	262255	SU53
1J1955426B	262205	SC48
1J1955426B	262253	SU48
1K1955425A	262211	SC60
1K1955426A	262205	SC48
3A1955427A	262207	SC53
3A1955427A	262255	SU53
3A1955427B	262255	SU53
3C1955425D	262211	SC60
3C1955426D	262205	SC48
3C8955425B	262211	SC60
3C8955426B	262204	SC45
3G1998002A	262205	SC48
3G1998002A	262213	SC65
5G1998002A	262204	SC45
5G1998002A	262213	SC65
5M0955425C	262215	SC70
5M0955426C	262216	SC70B
6K1955427A	262203	SC43
6N0955425A	262253	SU48
6N0955427A	262253	SU48
6RG955425A	262202	SC40
6RU955425C	262211	SC60

Connect
verbindet Experten**

Adaptors and fitting instructions

Einbauanleitungen

FRONT
VORNE

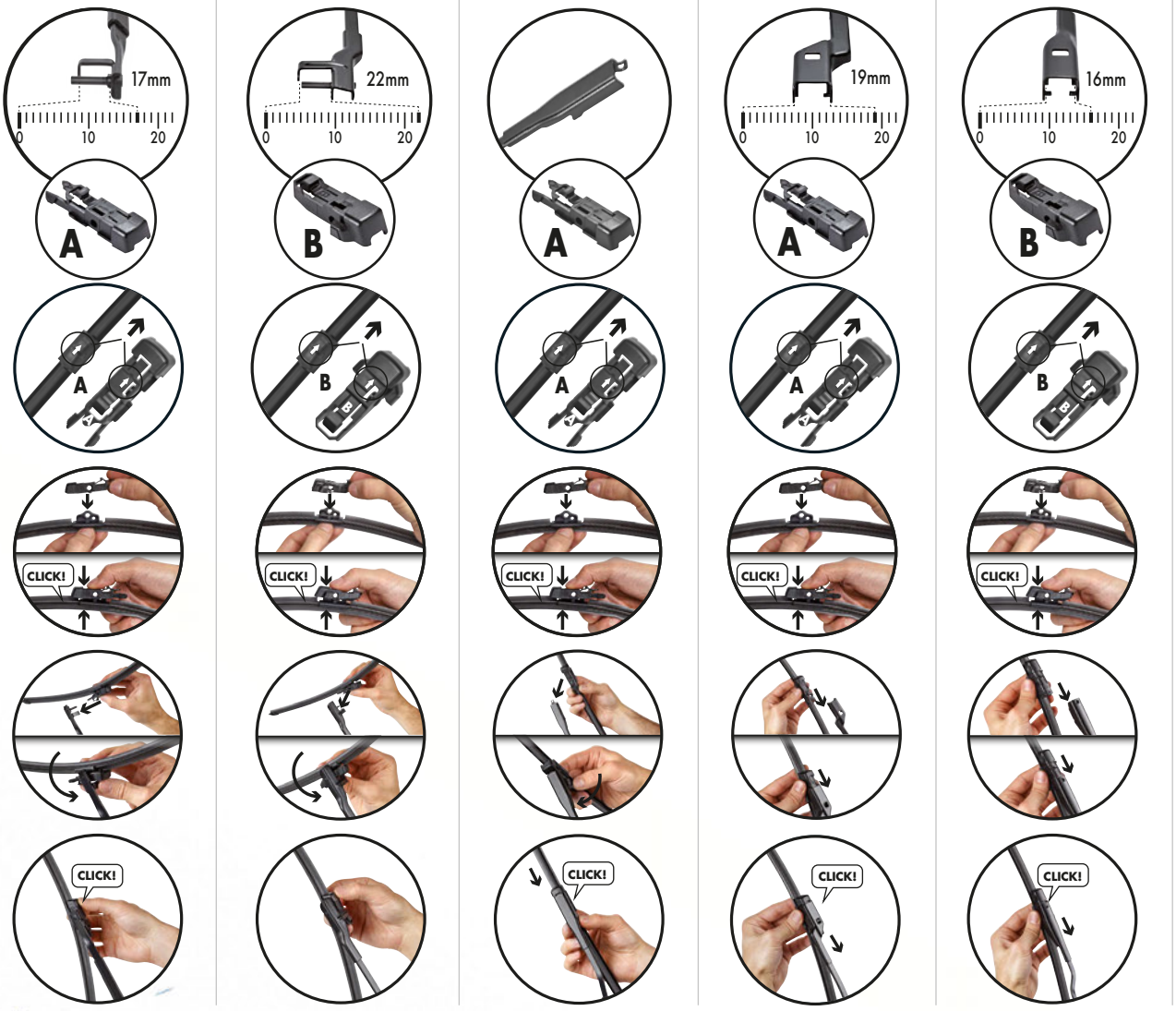

Adaptors and fitting instructions

Einbauanleitungen

UPGRADE

UPGRADE

N°4C

N°U

N°UR

N°U M10

Adaptors and fitting instructions

Einbauanleitungen

Connect
verbindet Experten**
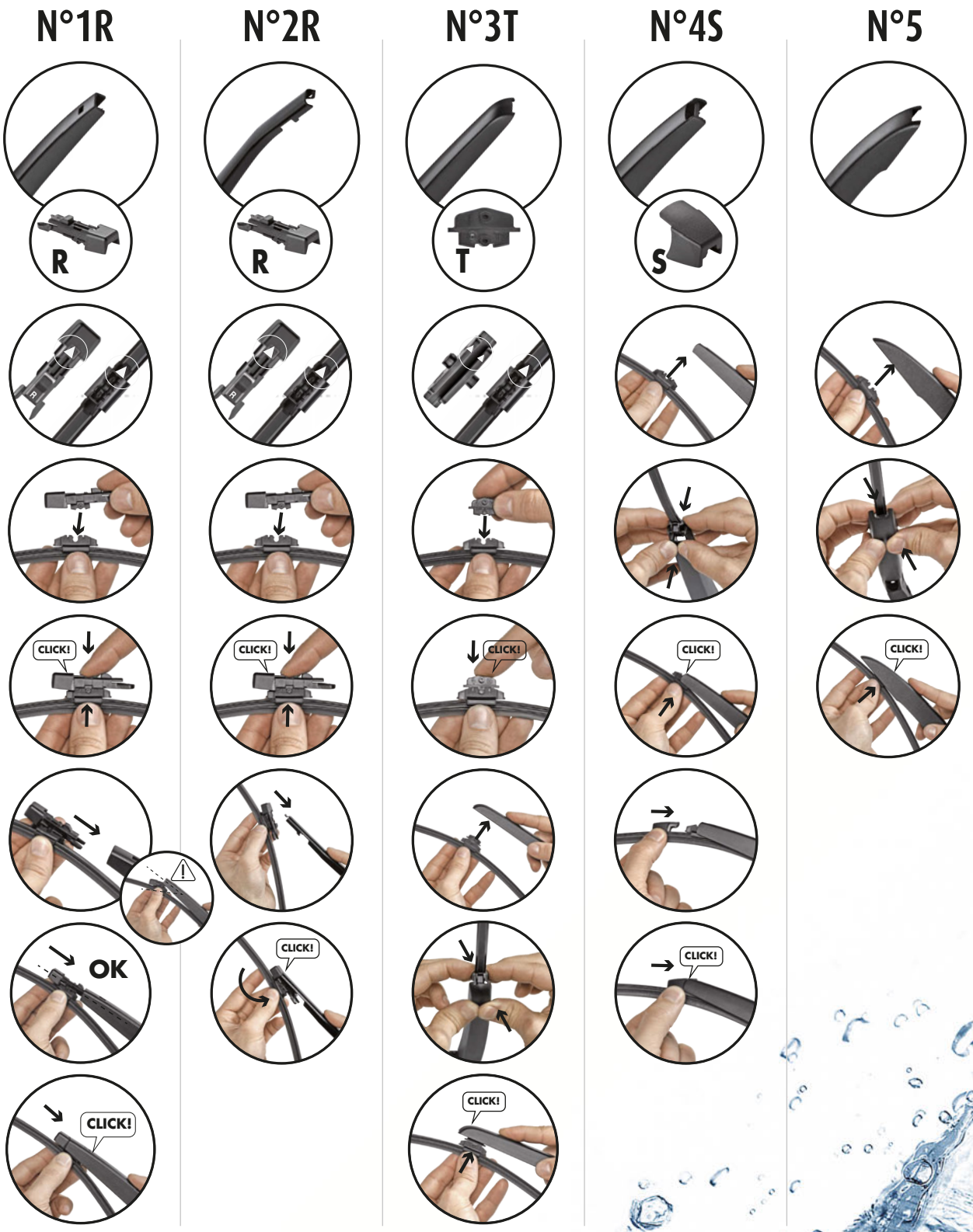
REAR
HECK