2012-2013

# ENGINE COOLING
THERMIQUE MOTEUR
**TÉRMICO MOTOR**
SISTEMAS TÉRMICOS
**TERMICO MOTORE**
MOTORKOELING
**MOTORKÜHLUNG**
SYSTEM CHŁODZENIA SILNIKA
**CHLAZENÍ MOTORŮ**
MOTOR HUTÉS
**MOTOR SOĞUTMA**
СИСТЕМА ОХЛАЖДЕНИЯ ДВИГАТЕЛЯ
**Ψύξη Μηχανής**

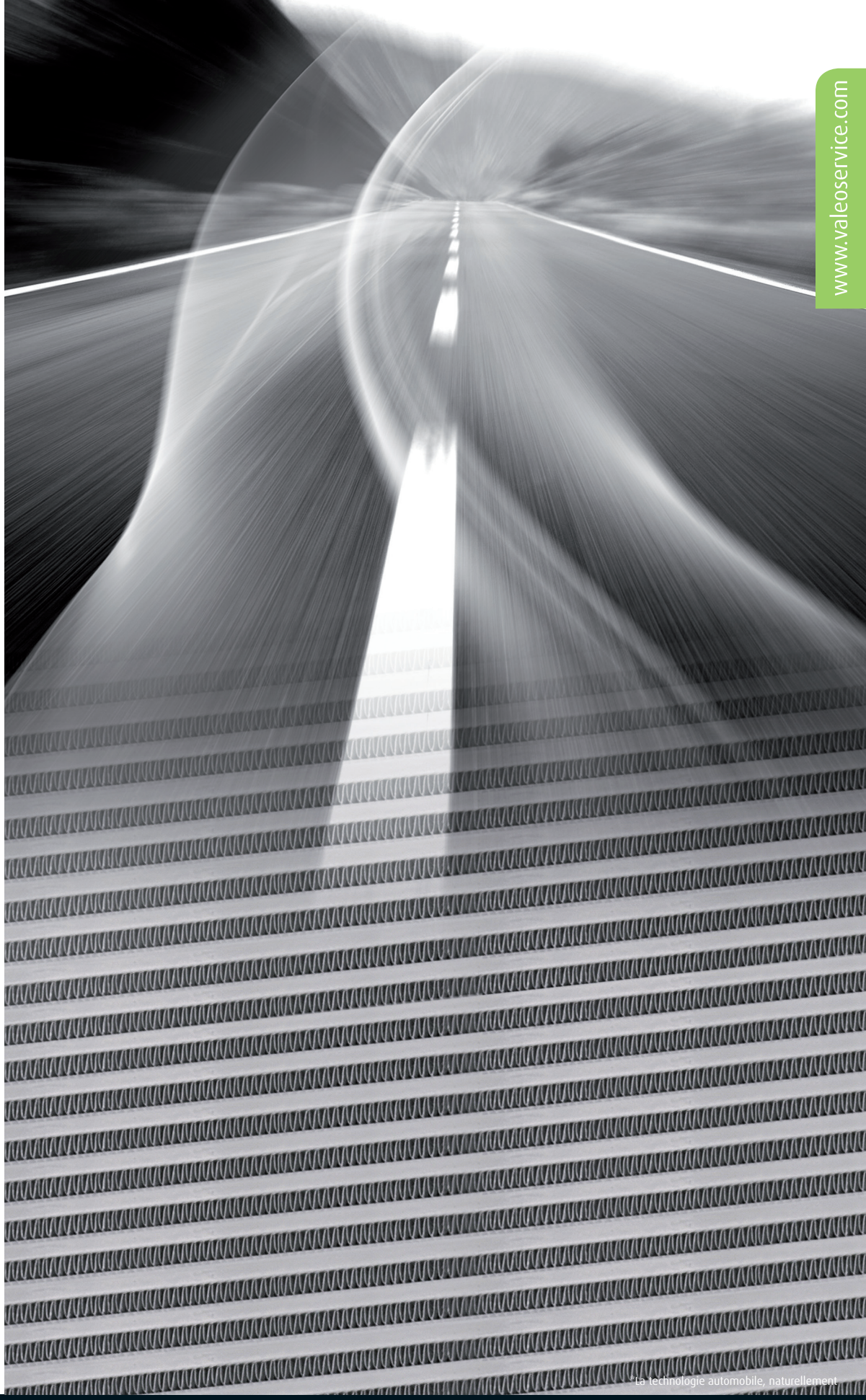

www.valeoservice.com

*La technologie automobile, naturellement

valeo added™

Valeo

Automotive technology, naturally

# 1843 Engine Cooling P/N (186 News)

FR Offre boucle thermique* / 1 453 références Thermique Moteur (dont 178 nouveautés)
DE Sortiment Kühlungskreislauf* / 1 453 Artikel (178 Neuheiten)
IT Offerta Thermal Loop* / 1 453 codici (178 Nuovi)
NL Thermische Loop Aanbod * / 1 453 Motor Koeling PN (178 Nieuw)
TR Tüm termal çevrim sunumu* / 1 453 Motor Soğutma parça numarası (178 yenilik)
SP Oferta circuito térmico*/ 1 453 Referencias térmico motor (178 nuevas)
RU Предложение Thermal Loop* / 1 453 Engine Cooling PN (178 Новинок)
HU Motorhűtés alkatrészek választéka* / 1453 cikkszám, 178 újdonság
CZ Celá nabídka dílů okruhu chlazení motoru* / 1 453 položek (vč. 178 nových)
RO O ofertă completă pentru sistemul de racire motor cu 1 453 coduri (178 noi)
GR Προσφορά για το κύκλωμα ψύξης*/ 1453 Κωδικοί (178 Νέοι)

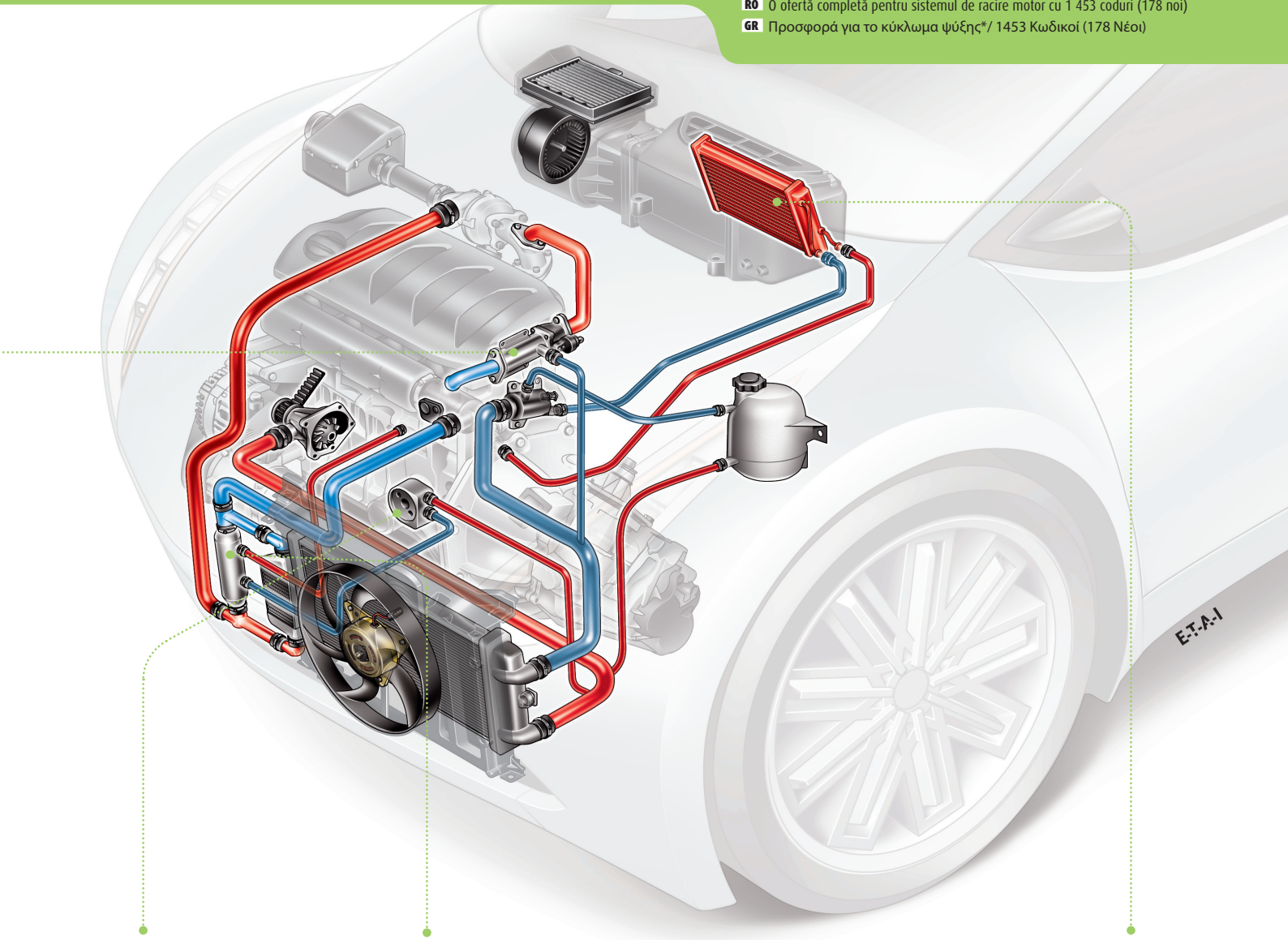


12

## Oil cooler

FR Refroidisseur d'huile
DE Ölkühler
IT Radiatore olio
NL Olie Koeler
TU Yağ soğutucu
SP Refrigerador de aceite
RU Масляный охладитель
HU Olajhűtő
CZ Olejový chladič
RO Răcitor Ulei
GR Ψυγείο Λαδιού

3

## Particle filter exchanger

FR Echangeur Filtre à Particules
DE Heizmodul für Rußpartikelfilter
IT Scambiatore a filtro particellare
NL Verwarming module voor roetfilters
TU Partikül filtre ısıtıcısı
SP Intercambiador filtros con partículas
RU Сажевый фильтр
HU Részecske szűrő fűtőegység
CZ Ohřívač pevných částic
RO Filtru Incalzitor Particule
GR Φίλτρο σωματιδίων

3

## Cooling module

FR Module de refroidissement
DE Kühlmodul
IT Modulo di raffreddamento
NL Koel Module
TU Soğutma modülü
SP Módulo completo
RU Модуль охлаждения
HU Hűtő-modul
CZ Přední modul chlazení
RO Modul de răcire
GR Ψυκτική μονάδα

422

## Condenser

FR Condenseur
DE Kondensator
IT Condensatore
NL Condensor
TU Kondenser
SP Condensador
RU Конденсор
HU Klímahűtő
CZ Kondenzátor
RO Condensor
GR Συμπυκνωτής

204

## Heater core

FR Radiateur de refroidissement
DE Heizungskühler
IT Radiatori di riscaldamento
NL Kachelradiator
TU Kalorifer radyatörü
SP Radiador de calefacción
RU Радиатор отопителя
HU Fűtőradiátor
CZ Radiátor topení
RO Radiator Habitaclu
GR Θερμαντικό Σώμα

# Everything you need to fit perfectly your radiator, Valeo provides it to you.

FR Tout ce que votre radiateur a besoin pour une monte parfaite, Valeo vous le propose.
DE Valeo bietet Ihnen alles, was Sie für einen perfekten Kühlereinbau benötigen.
IT Tutto quello di cui hai bisogno per montare perfettamente il tuo radiatore, Valeo lo fornisce.
NL Alles wat u nodig heeft voor een perfect passende radiator, Valeo biedt het u
TR En iyi radyatör ihtiyacı için bir Valeo sunumu
SP Todo lo que necesitas para el montaje de tu radiador, Valeo te lo facilita.
RU Все, что необходимо для идеальной установки радиатора, есть у Valeo
HU Minden, amire a vízhűtő tökéletes beszereléséhez szüksége van, megtalálható a Valeo kínálatában
CZ Vše potřebné k montáži chladiče uvnitř balení Valeo
RO Valeo vă oferă totul pentru o montare perfectă a radiatorului.
GR Η Valeo σας παρέχει όλα όσα χρειάζονται για τη σωστή τοποθέτηση του ψυγείου.

## Hose plug

FR Bouchon de radiateur fileté
DE Kühlerverschlussdeckel (mit Gewinde)
IT Tappo radiatore a vite
NL Radiator dop (met draad)
TU Radyatör kapağı (yivli)
SP Tapón de radiador con rosca
RU Заглушка для патрубка
HU Csőcsatlakozók
CZ Zátka hadice
RO Capac radiator
GR Τάπα ψυγείου με σπείρωμα

**819708** x10 ⌀ 21 mm
**819576** x10 ⌀ 16 mm
**819565** x10 ⌀ 8 mm

## Blanking Plug

FR Obturateur
DE Verschlussstopfen
IT Tappo di chiusura
NL Stekkers
TU Kör tapa
SP Obturador
RU Пробка
HU Vakdugók
CZ Záslepka
RO Capac obturator
GR Πώμα σφράγισης

**819707** x10
M18x1.5 mm + joint

## Threaded radiator cap

FR Bouchon de radiateur fileté
DE Kühlerverschlussdeckel (mit Gewinde)
IT Tappo radiatore a vite
NL Radiator dop (met draad)
TU Radyatör kapağı (yivli)
SP Tapón de radiador con rosca
RU Крышка радиатора, снабженная резьбой
HU Menetes hűtősapkák
CZ Zátka chladiče se závitem
RO Capac radiator cu filet
GR Τάπα ψυγείου με σπείρωμα

**820666** x1
For: PEUGEOT - CITROEN (730372, 730515, 731498, 731526, 732794)

## Blanking Plug

FR Obturateur
DE Verschlussstopfen
IT Tappo di chiusura
NL Stekkers
TU Kör tapa
SP Obturador
RU Пробка
HU Vakdugók
CZ Záslepka
RO Capac obturator
GR Πώμα σφράγισης

**819706** x10
M22x1.5 mm + joint

## Blanking plug

FR Obturateur
DE Verschlussstopfen
IT Tappo di chiusura
NL Stekkers
TU Kör tapa
SP Obturador
RU Пробка
HU Vakdugók
CZ Záslepka
RO Capac obturator
GR Πώμα σφράγισης

**820299** x10
For: ROVER

## Level sensor blanking plug

FR Détecteur de niveau Obturateur
DE Verschluss für Füllstandsanzeige
IT Tappo di chiusura con sensore di livello
NL Sluiting voor vulniveau
TU Su seviye sensörü kör tapası
SP Sensor de nivel
RU Заглушка отверстия контроля уровня жидкости
HU Szintjelző vakdugó
CZ Uzávěr snímače hladiny
RO Capac indicator nivel de apa
GR Πώμα σφράγισης αισθητήρα στάθμης

**820680** x10
For: PEUGEOT - CITROEN

## Radiator cap

FR Bouchon de radiateur
DE Kühlerverschlussdeckel
IT Tappo radiatore
NL Radiator dop
TU Radyatör kapağı
SP Tapón de radiador
RU Крышка радиатора
HU Vízhűtő sapka
CZ Zátka chladiče
RO Capac radiator
GR Τάπα ψυγείου

**819977** x10 ⌀ 36 mm

## Outlet

FR Tube
DE Anschlussstück
IT Scarico
NL Fitting
TU Çıkışı
SP Tubo
RU Штуцер
HU Kimenet
CZ Vývod
RO Furtun iesire
GR Έξοδος

**819986** x10
For: RENAULT

Valeo


New — New Nouveau Nuevo Novo Nuovo Nieuw Neu Nowi Yeni Новый Νέο Nové Nou — 3

1 — Valeo

Radiator — Radiateur Motorkühler Radiatore di raffreddamento Radiator Radyatör Radiador Радиатор vízhűtő Vodní chladič Radiator Ψυγείο — 9

Condenser — Condenseur Kondensator Condensatore Condensor Kondenser Condensador Конденсор klímahűtő Kondenzátor Condensor Συμπυκνωτής — 331

Fan system — Groupe moto-ventilateur Lüftersystem Gruppo Motoventilatore Fan-systeem Fan sistemi Grupo motorventilador Модуль вентилятора ventilátor rendszer Modul sahary Modul ventilator Σύστημα ανεμιστήρα — 405

Charge Air Cooler — Refroidisseur d'air de suralimentation Ladeluftkühler Intercooler Intercooler Turbo Radyatörü Intercooler Охладитель всасываемого воздуха töltőlevegő hűtő Intercooler Intercooler Intercooler — 557

Oil cooler — Refroidisseur d'huile Ölkühler Radiatore olio Olie Koeler Yağ soğutucu Refrigerador de aceite Масляный охладитель olajhűtő Olejový chladič Răcitor Ulei Ψυγείο Λαδιού — 601

Cooling module — Module de refroidissement Kühlmodul Modulo di raffreddamento Koel Module Soğutma modülü Módulo completo Модуль охлаждения hűtő-modul Přední modul chlazeníModul de răcire Ψυκτική μονάδα — 619

Heater core — Radiateur de refroidissement Heizungskühler Radiatori di riscaldamento Kachelradiator Kalorifer radyatörü Radiador de calefacción Радиатор отопителя fűtőradiátor Radiátor topení Radiator Habitaclu Θερμαντικό Σώμα — 623

EGR Cooler — Refroidisseur EGR AGR Kühler Scambiatore EGR EGR Koeler EGR soğutucu Refrigerador gas de escape (EGR) Охладитель отработанных газов EGR szelep hűtő Chladič EGR Supapă EGR Βαλβίδα EGR — 635

Particle Filter Exchanger — Echangeur Filtre à Particules Heizmodul für Rußpartikelfilter Scambiatore a filtro particellare Verwarming module voor roetfilters Partikül filtre ısıtıcısı Intercambiador filtros con partículas Сажевый фильтр részecske szűrő fűtőegység Ohřívač pevných částic Filtru Incalzitor Particule Φίλτρο σωματιδίων — 641

2 — Valeo → — 643

3 — Valeo → — 677

4 — OE → Valeo — 1055

5 — IAM → Valeo — 1085

6 — CODE TECH. → Valeo — 1127

CLASSIC

FR Complétez votre gamme de radiateurs avec Valeo Classic
DE Ergänzen Sie Ihr Kühlersortiment mit Valeo Classic
IT Completa la tua offerta di radiatori con Valeo Classic
NL Vul uw radiator aanbod aan met Valeo Classic
TR Radyatör sunumunuzu Valeo Classic ile genişletin
SP Completa tu oferta de radiador con Valeo Classic
RU Предложение Valeo по радиаторам не будет полным без радиатора Valeo Classic
HU Tegye teljessé hőcserélő kínálatát a Valeo Classic választék segítségével!
CZ Doplňte svůj sortiment chladiči Valeo Classic
RO Completați oferta de radiatoare cu Valeo Classic
GR Συμπληρώστε την πρόσφορα σας σε ψυγεία, με τη σειρά Valeo Classic

# Complete your radiator offer with Valeo Classic

NEW!

## For vehicles over 10 years old

FR Pour les véhicules de plus de 10 ans
DE Für Fahrzeuge über 10 Jahre Alter
IT Per il veicoli con più di 10 anni
NL Voor voertuigen >10jaar
TU 10 yaşından büyük araçlar için
SP Para vehículos de más de 10 años de antigüedad
RU Для транспортных средств старше 10 лет
HU 10 évnél idősebb járművekhez
CZ Pro vozidla starší 10 let
RO Pentru vehicule de peste 10 ani
GR Για οχήματα άνω των 10 ετών

## Economical offer linked to the vehicle value

FR Offre économique adaptée à la valeur résiduelle du véhicule
DE Ein Sortiment angepasst an den Fahrzeugwert
IT Un'offerta Eco adatta al valore del veicolo
NL Voordelig aanbod overeenkomstig met de waarde van het voertuig
TU Aracın değerine uyumlu ekonomik sunum
SP Oferta económica de acuerdo al valor del vehículo
RU Экономичное предложение взависмости от стоимости автомобиля
HU A jármű értékéhez illeszkedik az alkatrészé is
CZ Ekonomická nabídka pro vozidla s nízkou zůstatkovou hodnotou
RO Ofertă economică adaptată valorii vehiculului
GR Οικονομική προσφορά που συνδέεται με την αξία του οχήματος

## Adapted quality linked to the vehicle performance

FR Qualité adaptée aux performances des véhicules
DE Angepasste Qualität entsprechend der Fahrzeugleistung
IT Qualità adatta alle performance del veicolo
NL Kwaliteit vergelijkbaar met de prestatie van het voertuig
TU Aracın performansına uyumlu kalite
SP Calidad adaptada de acuerdo a las prestaciones del vehículo
RU Качество, адаптированное под характеристики транспортного средства
HU A jármű teljesítményéhez illeszkedik az alkatrészé is
CZ Optimální kvalita pro výkonnost vozidla
RO Calitate adaptată performanței vehiculului
GR Προσαρμοσμένη ποιότητα που συσχετίζεται με την απόδοση του αυτοκινήτου

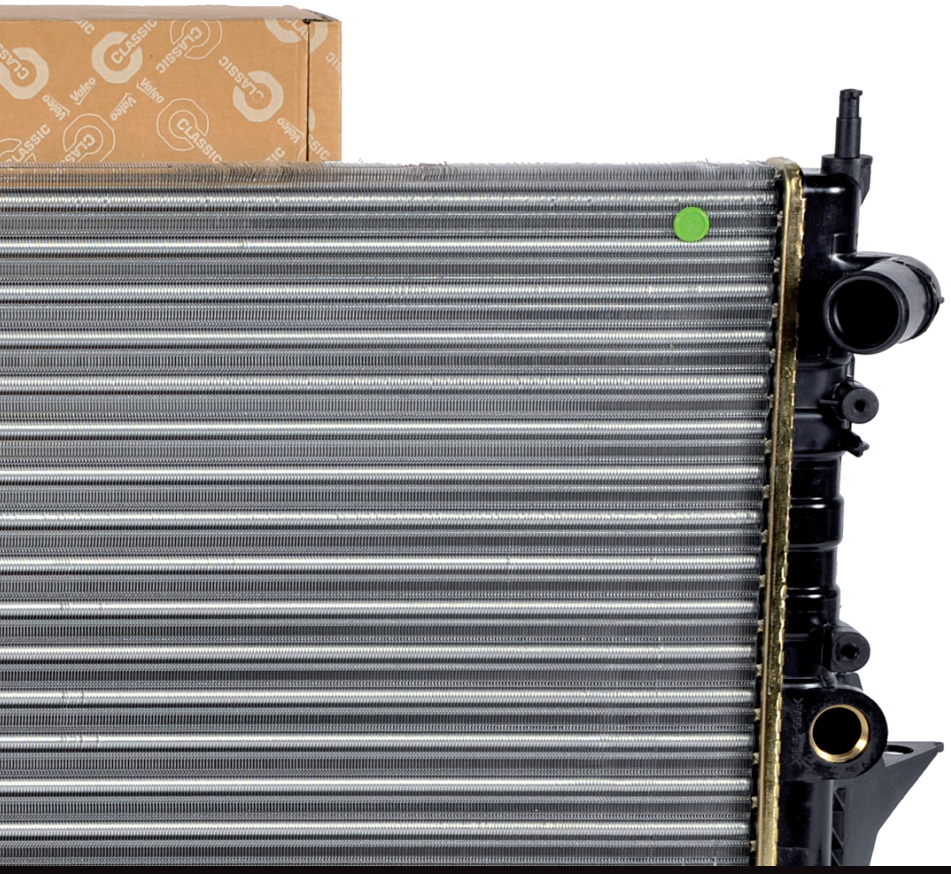

## Classic radiator meets the needs of an end of life vehicle

FR Les radiateurs Valeo Classic accompagnent parfaitement la fin de vie des véhicules
DE Classic Motorkühler entsprechen den Bedürfnissen älterer Fahrzeuge
IT I radiatori Classic seguono il fine vita dei veicoli
NL Classic radiator geschikt voor oudere voertuigen
TU Classic radyatör aracınızı sonuna kadar takip eder
SP Valeorigin mantiene la expectativa de vida del vehículo
RU Радиатор Classic испльзуется на более позднем жизненном цикле автомобиля
HU A Classic hőcserélők a jármű élettartamának végéig kiszolgálják azokat
CZ Chladiče Valeo Classic pro vozidla na konci životnosti
RO Radiatorul Classic are o durată de viață egală cu cea a vehiculului
GR Το ψυγείο Classic ακολουθεί το όχημα στο τέλος της ζωής του

More about Valeo Classic?

**New** Nouveau **Nuevo** Novo **Nuovo** Nieuw **Neu** Nowość **Yeni** Новый Νέο **Novy**

| Valeo | | |
|---|---|---|
| 119 | | |
| 735041 | ABARTH | Punto Evo |
| | ALFA ROMEO | MiTo |
| 732730 | ALFA ROMEO | 147 (2000>2004) |
| 735471 | AUDI | A4 (2007>) |
| 735472 | AUDI | A4 (2007>) |
| 735473 | AUDI | A4 (2007>) |
| 735474 | AUDI | A4 (2007>) |
| 735471 | AUDI | A4 Allroad Quattro (2009>) |
| 735472 | AUDI | A4 Allroad Quattro (2009>) |
| 735473 | AUDI | A4 Allroad Quattro (2009>) |
| 735474 | AUDI | A4 Allroad Quattro (2009>) |
| 735471 | AUDI | A5 |
| 735472 | AUDI | A5 |
| 735473 | AUDI | A5 |
| 735474 | AUDI | A5 |
| 735471 | AUDI | A5 Cabriolet (2009>) |
| 735472 | AUDI | A5 Cabriolet (2009>) |
| 735473 | AUDI | A5 Cabriolet (2009>) |
| 735474 | AUDI | A5 Cabriolet (2009>) |
| | AUDI | A7 |
| 735471 | AUDI | Q5 |
| 735472 | AUDI | Q5 |
| 735473 | AUDI | Q5 |
| | AUDI | S4 (2008>) |
| 735474 | AUDI | S4 (2008>) |
| 735473 | AUDI | S5 Cabriolet (2009>) |
| 735474 | AUDI | S5 Cabriolet (2009>) |
| 735476 | BMW | 1 series E87 |
| 735451 | BMW | 1 series F20 |
| 735453 | BMW | 1 series F20 |
| 735454 | BMW | 1 series F20 |
| 735455 | BMW | 1 series F20 |
| 735477 | BMW | 5 series E60 |
| 735475 | BMW | 5 series E60/61 LCI |
| 735476 | BMW | 5 series E60/61 LCI |
| 735477 | BMW | 5 series E60/61 LCI |
| 735278 | BMW | 5 series F10/F11 |
| 735475 | BMW | 6 series E63/E64 |
| 735476 | BMW | 6 series E63/E64 |
| 735477 | BMW | 6 series E63/E64 |
| 735090 | CITROEN | Berlingo (B9) (2008>) |
| 735608 | CITROEN | C2 |
| 883764 | CITROEN | C25 (81>90) |

| Valeo | | |
|---|---|---|
| 735608 | CITROEN | C3 (2009>) |
| | CITROEN | C3 Picasso (2009>) |
| 735090 | CITROEN | C4 (2004>2010) |
| 735597 | CITROEN | C4 (2004>2010) |
| 735598 | CITROEN | C4 (2004>2010) |
| 735608 | CITROEN | C4 (2004>2010) |
| 732600 | CITROEN | C5 (2001>2004) |
| 735608 | CITROEN | C5 (2004>2007) |
| 735371 | CITROEN | C5 (2008>) |
| 735608 | CITROEN | DS3 |
| 735279 | DACIA | Duster (2010>) |
| 735041 | FIAT | Bravo |
| 735085 | FIAT | Croma II (2005>2007) |
| 810924 | FIAT | Uno (83>95) |
| | FIAT | Uno CS (87>) |
| | FIAT | Uno Mondo (98>) |
| 735498 | FIAT | 500 |
| 735373 | FORD | C-Max (2010>) |
| 735374 | FORD | C-Max (2010>) |
| 731594 | FORD | Escort (86>90) |
| 735378 | FORD | Fiesta (2008>) |
| 735379 | FORD | Fiesta (2008>) |
| 732962 | FORD | Focus (2001>2003) |
| | FORD | Focus (2004>) |
| 735372 | FORD | Galaxy (2000>2006) |
| 735373 | FORD | Galaxy (2010>) |
| 735374 | FORD | Galaxy (2010>) |
| 735376 | FORD | Galaxy (2010>) |
| 735373 | FORD | Galaxy CA1 (2006>) |
| 735374 | FORD | Galaxy CA1 (2006>) |
| 735376 | FORD | Galaxy CA1 (2006>) |
| 735600 | FORD | Galaxy CA1 (2006>) |
| 735478 | FORD | Ka (96>2008) |
| 735373 | FORD | Kuga |
| 735376 | FORD | Mondeo III (2007>) |
| 735600 | FORD | Mondeo III (2007>) |
| 735374 | FORD | Mondeo III (2010>) |
| 731594 | FORD | Orion (83>90) |
| 735373 | FORD | S-Max (2006>2010) |
| 735374 | FORD | S-Max (2006>2010) |
| 735376 | FORD | S-Max (2006>2010) |
| 735600 | FORD | S-Max (2006>2010) |
| 735478 | FORD | StreetKa |
| 735586 | HYUNDAI | Accent (2006>) |
| 735589 | HYUNDAI | Accent (99>2003) |
| 735562 | HYUNDAI | Atos |
| | HYUNDAI | Atos Prime |

Valeo

**New** Nouveau **Nuevo** Novo **Nuovo** Nieuw **Neu** Nowość **Yeni** Новый Νέο **Novy**

| Valeo | | |
|---|---|---|
| | (.../...) | |
| 735564 | HYUNDAI | i30 |
| 735606 | HYUNDAI | Matrix |
| 735351 | JEEP | Cherokee (2001>2004) |
| 735563 | KIA | Sportage (2007>2010) |
| 735600 | LAND ROVER | Freelander 2 (2006>) |
| | LAND ROVER | Range Rover Evoque |
| 734498 | LEXUS | IS I (99>2005) |
| 734499 | LEXUS | IS I (99>2005) |
| 735571 | LEXUS | RX 400 |
| 735416 | MAZDA | 2 (2007>) |
| 735577 | MAZDA | 626 (GF) (99>2002) |
| 732588 | MERCEDES | A Class (168) (97>2003) |
| 735479 | MERCEDES | C Class (203) (2000>2003) |
| | MERCEDES | C Class (203) (2004>) |
| 735138 | MERCEDES | C Class (204) (2007>) |
| 735139 | MERCEDES | C Class (204) (2007>) |
| 735285 | MERCEDES | C Class (204) (2007>) |
| 735287 | MERCEDES | C Class (204) (2007>) |
| 735292 | MERCEDES | C Class (204) (2007>) |
| 735144 | MERCEDES | CLC Class (203) |
| 734938 | MERCEDES | CLS (2004>2010) |
| 735382 | MERCEDES | CLS (2004>2010) |
| | MERCEDES | CLS (2008>) |
| 735292 | MERCEDES | CLS (218) (2010>) |
| 735382 | MERCEDES | E Class (211) (2002>2006) |
| 735287 | MERCEDES | E Class (212) (2009>) |
| 735292 | MERCEDES | E Class (212) (2009>) |
| 735287 | MERCEDES | GLK |
| 819378 | MERCEDES | S Class (126) |
| 735298 | MERCEDES | S Class (221) |
| 735299 | MERCEDES | S Class (221) |
| 734318 | MERCEDES | SLK (171) (2008>) |
| | MERCEDES | SLK (2004>2007) |
| 735480 | MINI | MINI (R56) (2006>) |
| 735481 | MINI | MINI (R56) (2006>) |
| 735480 | MINI | MINI 2 LCI (R56/R57) (2009>) |
| 735481 | MINI | MINI 2 LCI (R56/R57) (2009>) |
| 735480 | MINI | MINI Clubman |
| 735481 | MINI | MINI Clubman |
| 735480 | MINI | MINI LCI Clubman (R55) (2009>) |
| 735481 | MINI | MINI LCI Clubman (R55) (2009>) |
| 735576 | MITSUBISHI | Grandis |
| 735441 | MITSUBISHI | L 200 II (K84T) (2006>) |
| 735420 | MITSUBISHI | L200 (K6/7) |

| Valeo | | |
|---|---|---|
| | (.../...) | |
| 735428 | MITSUBISHI | L200 (K6/7) |
| 735437 | MITSUBISHI | L200 (K6/7) |
| 735575 | MITSUBISHI | Lancer (2007>) |
| | MITSUBISHI | Lancer Sportback (CX) (2008>) |
| | MITSUBISHI | Outlander (2006>) |
| 734436 | NISSAN | Micra (2005>) |
| 734437 | NISSAN | Micra (2005>) |
| 734436 | NISSAN | Note (2005>2007) |
| 734437 | NISSAN | Note (2005>2007) |
| 734436 | NISSAN | Note (2008>) |
| 735381 | NISSAN | Qashqai |
| 735482 | OPEL | Insignia |
| | OPEL | Insignia |
| 735483 | OPEL | Insignia |
| 735484 | OPEL | Insignia |
| 735485 | OPEL | Insignia |
| 735486 | OPEL | Insignia |
| 735487 | OPEL | Insignia |
| 735488 | OPEL | Insignia |
| 735083 | OPEL | Kadett E (84>91) |
| | OPEL | Signum B (2005>) |
| | OPEL | Vectra C (2005>) |
| 735597 | PEUGEOT | 206 |
| 735608 | PEUGEOT | 207 |
| 735090 | PEUGEOT | 307 (2005>) |
| 735597 | PEUGEOT | 307 (2005>) |
| 735598 | PEUGEOT | 307 (2005>) |
| 735608 | PEUGEOT | 307 (2005>) |
| | PEUGEOT | 307(2001>2005) |
| 735090 | PEUGEOT | 308 |
| 735608 | PEUGEOT | 407 |
| 735371 | PEUGEOT | 508 |
| 735090 | PEUGEOT | Partner (B9) (2008>) |
| 735489 | RENAULT | Espace IV Phase 2 (2006>) |
| | RENAULT | Laguna II (2005>) |
| 735607 | RENAULT | Mégane III (2008>) |
| | RENAULT | Scenic III (2009>) |
| 735083 | SAAB | 9-3 (2002>) |
| 735086 | SAAB | 9-3 (2002>) |
| 735129 | SAAB | 9-3 (2002>) |
| 735130 | SAAB | 9-3 (2002>) |
| 735131 | SAAB | 9-3 (2002>) |

**New** Nouveau **Nuevo** Novo **Nuovo** Nieuw **Neu** Nowość **Yeni** Новый Νέο **Novy**

| Valeo | | |
|---|---|---|
| | (.../...) | |
| 736083 | SEAT | Leon I (99>2006) |
| | SEAT | Toledo (98>2004) |
| | SKODA | Octavia (2000>2004) |
| | SKODA | Octavia (96>2000) |
| 735280 | SKODA | Yeti (2009>) |
| 735404 | SUBARU | Forester (SG) (2002>) |
| 735433 | SUZUKI | Grand Vitara (2006>) |
| 735580 | SUZUKI | Grand Vitara (2006>) |
| 735578 | SUZUKI | Jimny |
| 735383 | SUZUKI | Splash |
| 735407 | SUZUKI | SX4 (2006>2009) |
| | SUZUKI | SX4 (2009>) |
| 735400 | SUZUKI | SX4 (MAGYAR) (2009>) |
| 735405 | SUZUKI | Vitara |
| 734492 | TOYOTA | Camry (2001>2006) |
| 735574 | TOYOTA | Corolla (120) (2001>) |
| 735415 | TOYOTA | Corolla (E11) |
| 735567 | TOYOTA | Corolla (E12) |
| 735572 | TOYOTA | Corolla Verso (2004>2009) |
| 735573 | TOYOTA | Corolla Verso (2004>2009) |
| 735583 | TOYOTA | Cressida III (84>88) |
| 735565 | TOYOTA | Hiace |
| 735593 | TOYOTA | Hiace |
| 735442 | TOYOTA | Hilux |
| 735568 | TOYOTA | Land Cruiser (2002>) |
| 735569 | TOYOTA | Land Cruiser (2002>) |
| 735449 | TOYOTA | Prius II |
| 731714 | TOYOTA | Starlet (EP/NP8) (89>95) |
| 735445 | TOYOTA | Yaris (KS/NL/SCP90) (2005>) |
| | TOYOTA | Yaris (KSP) JPP (2005>) |
| 735483 | VAUXHALL | Insignia |
| 735484 | VAUXHALL | Insignia |
| 735485 | VAUXHALL | Insignia |
| 735486 | VAUXHALL | Insignia |
| 735487 | VAUXHALL | Insignia |
| 735488 | VAUXHALL | Insignia |
| 735083 | VAUXHALL | Signum B (2005>) |
| | VAUXHALL | Vectra (2005>) |
| 734931 | VAUXHALL | Vivaro (2006>) |
| 736083 | VOLKSWAGEN | Bora |
| | VOLKSWAGEN | Golf IV (97>2003) |
| 735280 | VOLKSWAGEN | Golf VI (2008>) |
| | VOLKSWAGEN | Jetta (2010>) |

| Valeo | | |
|---|---|---|
| | (.../...) | |
| 732396 | VOLKSWAGEN | New Beetle (2001>2005) |
| | VOLKSWAGEN | New Beetle (2005>) |
| | VOLKSWAGEN | New Beetle (98>2001) |
| 735310 | VOLKSWAGEN | Polo |
| 735375 | VOLKSWAGEN | Tiguan |
| 735280 | VOLKSWAGEN | Touran (2010>) |
| 735469 | VOLKSWAGEN | UP |
| 810971 | VOLVO | 240-260 |
| | VOLVO | 740-760-780 |
| 731477 | VOLVO | 850 |
| 810971 | VOLVO | 940-960 |
| 735490 | VOLVO | S40 (2004>) |
| | VOLVO | S60 (2000>2009) |
| 735600 | VOLVO | S60 (2010>) |
| 731477 | VOLVO | S70 |
| 735600 | VOLVO | S80 (2006>) |
| 735490 | VOLVO | S80 (98>2006) |
| 735600 | VOLVO | V70 (2007>) |
| 731477 | VOLVO | V70 (96>99) |
| 735600 | VOLVO | XC 60 |
| 735490 | VOLVO | XC 70 (2000>2007) |
| 735600 | VOLVO | XC 70 (2007>) |
| **33** | | |
| 818824 | ABARTH | Grande Punto |
| | ALFA ROMEO | MiTo |
| 817557 | AUDI | A3 (96>2003) |
| 818259 | BMW | 1 series F20 |
| 818260 | BMW | 1 series F20 |
| 818263 | BMW | 1 series F20 |
| 818273 | BMW | 5 series E60 |
| | BMW | 5 series E60/61 LCI |
| 818252 | BMW | X3 (2010>) |
| 818253 | BMW | X3 (2010>) |
| 818254 | BMW | X3 (2010>) |
| 817706 | CITROEN | Berlingo (2002>) |
| 817854 | CITROEN | C5 (2004>2007) |
| 818227 | CITROEN | C5 (2008>) |
| 818244 | CITROEN | C5 (2008>) |
| 817706 | CITROEN | Xsara Picasso |
| 818824 | FIAT | Bravo |
| 818721 | FIAT | Croma II (2005>2007) |
| 818830 | FIAT | Croma II (2005>2007) |
| 818241 | FORD | Fiesta (2008>) |
| 818246 | FORD | Focus II (2007>) |

Valeo

**New** Nouveau **Nuevo** Novo **Nuovo** Nieuw **Neu** Nowość **Yeni** Новый Néo **Novy**

| Valeo | | |
|---|---|---|
| | (.../...) | |
| 818245 | FORD | Focus II FL |
| 818240 | FORD | Galaxy CA1 (2006>) |
| 818246 | FORD | Kuga |
| 818239 | FORD | Mondeo III (2007>) |
| 818240 | FORD | Mondeo III (2007>) |
| | FORD | S-Max (2006>2010) |
| 818249 | LAND ROVER | Freelander 2 (2006>) |
| 818276 | MERCEDES | C Class (204) (2007>) |
| 818852 | NISSAN | Note (2005>2007) |
| | NISSAN | Note (2008>) |
| 818264 | NISSAN | Tiida (C11X) (2007>) |
| 818226 | PEUGEOT | 308 |
| 818895 | PEUGEOT | 607 (2004>) |
| 817706 | PEUGEOT | Partner (2002>) |
| | PEUGEOT | Ranch (2002>) |
| 818251 | RENAULT | CLIO III |
| 817490 | RENAULT | Megane (95>99) |
| | RENAULT | Megane (98>2003) |
| | RENAULT | Megane Classic (96>99) |
| | RENAULT | Megane Classic (99>2002) |
| | RENAULT | Megane Scenic (96>99) |
| | RENAULT | Megane Scenic (99>2003) |
| 818251 | RENAULT | Modus |
| 818250 | RENAULT | Twingo III (FL) |
| 818817 | SAAB | 9-3 (2002>) |
| 818840 | SAAB | 9-3 (2002>) |
| 817276 | SAAB | 9-5 (2001>2005) |
| | SAAB | 9-5 (2005>2010) |
| | SAAB | 9-5 (97>2001) |
| 817557 | SEAT | Leon I (99>2006) |
| | SKODA | Octavia (2000>2004) |
| | VOLKSWAGEN | Bora |
| | VOLKSWAGEN | Golf IV (97>2003) |
| 818272 | VOLKSWAGEN | Transporter (7E/7F) (2009>) |
| | VOLKSWAGEN | Transporter (7J/7H)(2003>2009) |
| **16** | | |
| 696109 | ALFA ROMEO | 147 (2000>2004) |
| | ALFA ROMEO | 147 (2004>) |
| | ALFA ROMEO | 166 (2003>) |
| | ALFA ROMEO | 166 (98>2003) |
| 696365 | CHRYSLER | PT Cruiser (2000>2007) |
| 696344 | FORD | Fiesta (2008>) |
| 696345 | FORD | Fiesta (2008>) |

| Valeo | | |
|---|---|---|
| | (.../...) | |
| 696346 | FORD | Fiesta (2008>) |
| 696362 | FORD | Mondeo (2000>2003) |
| | FORD | Mondeo (2003>2005) |
| | FORD | Mondeo (2005>2007) |
| 696377 | MINI | MINI (R56) (2006>) |
| 696378 | MINI | MINI (R56) (2006>) |
| 696379 | MINI | MINI (R56) (2006>) |
| | MINI | MINI Coup_ (2011>) |
| 696381 | OPEL | Corsa C (2000>2003) |
| 696382 | OPEL | Corsa C (2000>2003) |
| 696364 | OPEL | Meriva |
| 696385 | OPEL | Meriva |
| 696386 | OPEL | Meriva |
| 696081 | RENAULT | Master (2003>2006) |
| 696387 | SAAB | 9-3 (2002>) |
| 696381 | VAUXHALL | Corsa II (2000>2003) |
| 696382 | VAUXHALL | Corsa II (2000>2003) |
| | VAUXHALL | Corsa II (2003>2006) |
| 696387 | VAUXHALL | Vectra (2002>) |
| **13** | | |
| 696240 | AUDI | A5 |
| 696241 | AUDI | A5 |
| 696355 | OPEL | Astra G (98>2005) |
| 696370 | OPEL | Astra G (98>2005) |
| 696367 | OPEL | Corsa C (2000>2003) |
| 696373 | OPEL | Meriva |
| 696374 | OPEL | Meriva |
| 696384 | OPEL | Meriva |
| 696355 | OPEL | Zafira (2003>2005) |
| 696370 | OPEL | Zafira (2003>2005) |
| 696355 | OPEL | Zafira (98>2003) |
| 696368 | PEUGEOT | 206 |
| 696376 | RENAULT | Mégane III (2008>) |
| | RENAULT | Scenic III (2009>) |
| 696375 | SEAT | Cordoba (2002>) |
| | SEAT | Ibiza (2001>) |
| | SEAT | Ibiza VI (2008>) |
| | SKODA | Fabia (99>2004) |
| | SKODA | Fabia (FL) (2004>2007) |
| | SKODA | Fabia II (2007>) |
| | SKODA | Roomster (2006>2010) |
| 696355 | VAUXHALL | Astra IV (98>) |
| 696369 | VAUXHALL | Combo (2001>2004) |

**New** Nouveau **Nuevo** Novo **Nuovo** Nieuw **Neu** Nowość **Yeni** Новый Νέο **Novy**

| Valeo | | |
|---|---|---|
| | (.../...) | |
| 696383 | **VAUXHALL** | Combo (2001>2004) |
| | **VAUXHALL** | Corsa II (2000>2003) |
| 696369 | **VAUXHALL** | Corsa II (2000>2006) |
| 696383 | **VAUXHALL** | Corsa II (2003>2006) |
| 696355 | **VAUXHALL** | Zafira (2003>) |
| | **VAUXHALL** | Zafira (99>2003) |
| 696375 | **VOLKSWAGEN** | Fox |
| | **VOLKSWAGEN** | Polo (2001>) |
| | **VOLKSWAGEN** | Polo (2005>) |
| | **VOLKSWAGEN** | Polo (99>2001) |
| 4 | | |
| 816597 | **CITROEN** | 2 CV |
| | **CITROEN** | Acadiane |
| | **CITROEN** | Ami 6 |
| | **CITROEN** | Ami 8 |
| 818888 | **CITROEN** | C5 (2001>2004) |
| 818889 | **CITROEN** | C5 (2001>2004) |
| 818890 | **CITROEN** | C5 (2001>2004) |
| 818889 | **CITROEN** | C5 (2004>2007) |
| 818890 | **CITROEN** | C5 (2008>) |
| | **CITROEN** | C8 |
| 816597 | **CITROEN** | Dyane |
| | **CITROEN** | Mehari |
| 818889 | **PEUGEOT** | 407 |
| 818890 | **PEUGEOT** | 407 |
| | **PEUGEOT** | 807 |

| Valeo | |
|---|---|

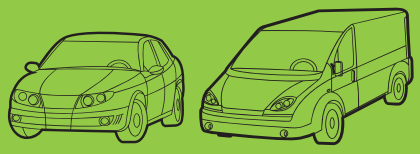

Valeo

Pour / For

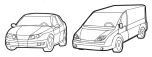


| | |
|---|---|
| ABARTH | 10 |
| ALFA ROMEO | 10 |
| ARO | 13 |
| AUDI | 14 |
| AUTOBIANCHI | 27 |
| BEDFORD | 27 |
| BMW | 27 |
| CHEVROLET | 37 |
| CHRYSLER | 37 |
| CITROEN | 38 |
| DACIA | 56 |
| DAEWOO | 57 |
| DAIHATSU | 58 |
| FIAT | 61 |
| FORD | 81 |
| FORD USA | 96 |
| G.M.E. | 96 |
| HONDA | 96 |
| HYUNDAI | 101 |
| INNOCENTI | 105 |
| IVECO | 105 |
| JAGUAR | 106 |
| JEEP | 106 |
| KIA | 107 |
| LADA | 108 |
| LANCIA | 109 |
| LAND ROVER | 115 |
| LEXUS | 116 |
| MAZDA | 116 |
| MCC | 120 |
| MERCEDES | 121 |
| MG | 140 |
| MINI | 141 |
| MITSUBISHI | 142 |
| NISSAN | 148 |
| OPEL | 155 |
| PEUGEOT | 173 |
| PORSCHE | 200 |
| RENAULT | 200 |
| RENAULT VEHICULES INDUSTRIELS | 227 |
| ROVER | 227 |
| SAAB | 232 |
| SANTANA | 234 |
| SEAT | 234 |
| SKODA | 247 |
| SSANGYONG | 257 |
| SUBARU | 257 |
| SUZUKI | 259 |
| TOYOTA | 261 |
| VAUXHALL | 268 |
| VOLKSWAGEN | 280 |
| VOLVO | 320 |


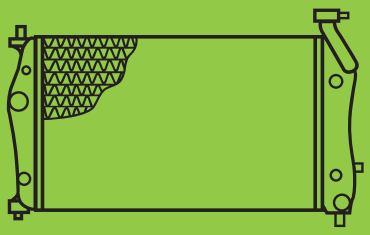

Radiator
Radiateur
Motorkühler
Radiatore di raffreddamento
Radiator
Radyatör
Radiator
Radiador
Радиатор
vízhűtő
Vodní chladič
Radiator
Ψυγείο

| Type Ctr. | | CC | | AC | | | OE | Valeo | DIM. | TECH |
|---|---|---|---|---|---|---|---|---|---|---|
| **ABARTH** | | | | | | | | | | |
| **GRANDE PUNTO** | | | | | | | | | | |
| 1.4 T-Jet 155 16V,1.4 T-Jet 180 16V | E | 1368 | 199A8.000 | M | +/- | | 09/07 ▸ | 51896964 | **735041** | 620 414,5 | ALB |
| **PUNTO EVO** | | | | | | | | | | |
| 1.4 TB 16V | E | 1368 | 955A8.000 | M | +/- | | 05/10 ▸ | 51896964 | **735041** | 620 414,5 | ALB |
| **ALFA ROMEO** | | | | | | | | | | |
| **33 (83>89)** | | | | | | | | | | |
| 1200 905A | E | 1189 | AR30500 | M | - | TSW 819744 | 08/83 ▸ 07/89 | 60504387 | **811010** | 545 248 | ALM |
| 1.3 AS,1.3 DC 905A1 | E | 1351 | AR30168,AR30502,AR30512 AS30168,AS30568,AS30587 | M | - | TSW 819744 | 08/83 ▸ 07/89 | 60504387 | **811010** | 545 248 | ALM |
| 1.5,1.5 AS,1.5 DC,1.5 i 905A2 | E | 1490 | AR30146,AR30182,AR30504 AR30514,AR30520,AR30526 AS30508 | M | - | TSW 819744 | 08/83 ▸ 07/89 | 60504387 | **811010** | 545 248 | ALM |
| 1.7 i,1.7 ie 905/A3/A4 | E | 1712 | AR30550,AS30550 | M | - | TSW 819744 | 09/86 ▸ 07/89 | 60504387 | **811010** | 545 248 | ALM |
| 1.7 ie 905A3 | E | 1712 | AR30558,AS30550,AS30558 | M | - | | 08/87 ▸ 07/89 | 60504386 | | 543 227 | ALB |
| 1.8 TD 905A4 | D | 1779 | VM82A | M | - | | 09/86 ▸ 07/89 | 60537373 | | 538 272 | CBS |
| **33 (89>94)** | | | | | | | | | | |
| 1.2 907A4 | E | 1186 | AR30743 | M | +/- | TSW | 08/89 ▸ 09/94 | 60538379 | **816710** | 520 322 | ALM |
| 1.3,1.3 ie 907/A3/B3 | E | 1351 | AR30732,AR30753,AR30755 | M | +/- | TSW | 08/89 ▸ 09/94 | 60538379 | **816710** | 520 322 | ALM |
| 1.5,1.5 ie 907/A2/B2 | E | 1490 | AR30734,AR30750,AR30751 | M | +/- | TSW | 08/89 ▸ 09/94 | 60538379 | **816710** | 520 322 | ALM |
| 1.7 i 16V,1.7 ie 907/A1/AB/B1 | E | 1712 | AR30736,AR30737,AR30740 AR30746,AR30747,AR60746 | M | +/- | TSW | 08/89 ▸ 09/94 | 60578740 | **816710** | 520 322 | ALM |
| 1.8 TD 907/A5/B5 | D | 1779 | VM96A | M | +/- | | 08/89 ▸ 09/94 | 60538709 | | 538 374 | CBS |
| **75** | | | | | | | | | | |
| 1.6,1.6 ie 162B2 | E | 1567 | AR06100,AR61101,AR61102 | M | +/- | TSW | 05/85 ▸ 1993 | 60526047 | **811389** | 440 414 | ALM |
| 1.8 i,1.8 ie 162B1 | E | 1779 | AR06168,AR06202,AR61201 AR61202 | M | +/- | TSW | 05/85 ▸ 1993 | 60526047 | **811389** | 440 414 | ALM |
| 1.8 Turbo,1.8 Turbo E 162B1 | E | 1779 | AR06134,AR06158,AR61203 | M | +/- | TSW | 02/86 ▸ 1993 | 60507820 | **811068** | 490 415 | ALM |
| 2.0 162/BA/BF | E | 1962 | AR06212 | M | +/- | TSW | 05/85 ▸ 07/87 | 60526047 | **811389** | 440 414 | ALM |
| 2.0 i Twin Spark 162B4 | E | 1962 | AR06224 | M | +/- | TSW | 06/87 ▸ 1993 | 60507820 | **811068** | 490 415 | ALM |
| 2.5 i V6 162B3 | E | 2492 | AR01646 | M | +/- | TSW | 05/85 ▸ 08/88 | 60507820 | **811068** | 490 415 | ALM |
| 2.5 i V6 162B3 | E | 2492 | AR01646,AR01911 | A | +/- | TSW | 09/88 ▸ 1993 | 60507820 | **811068** | 490 415 | ALM |
| 3.0 i V6 162B6 | E | 2959 | AR06120,AR61503 | M | +/- | TSW | 06/87 ▸ 1993 | 60507820 | **811068** | 490 415 | ALM |
| 2.0 TD 162BG | D | 1995 | VM80A | M | +/- | | 01/89 ▸ 1993 | 60533513 | | 538 409,5 | CBS |
| 2.4 TD 162B5 | D | 2393 | VM81A | M | +/- | | 09/88 ▸ 1993 | 60533513 | | 538 409,5 | CBS |
| **90** | | | | | | | | | | |
| 1.8 i,1800 i 162A1 | E | 1779 | AR06202 | M | +/- | TSW | 09/84 ▸ 1988 | 60526047 | **811389** | 440 414 | ALM |
| 2.0 i,2000,2000 i 162A2 | E | 1962 | AR01713,AR06212 | M | +/- | TSW | 09/84 ▸ 1988 | 60526047 | **811389** | 440 414 | ALM |
| 2.0 i V6,2000 i V6 162A2 | E | 1997 | AR06210 | M | +/- | TSW | 06/86 ▸ 1988 | 60507820 | **811068** | 490 415 | ALM |
| 2.5 i V6,2500 i V6 162/A/A//AA | E | 2492 | AR01646,AR01911 | M | +/- | TSW | 09/84 ▸ 1988 | 60507820 | **811068** | 490 415 | ALM |
| 2.4 TD,2400 TD 162A3 | D | 2393 | VM81A | M | +/- | | 09/84 ▸ 1988 | 60533513 | | 538 409,5 | CBS |
| **145** | | | | | | | | | | |
| 1.3 i 930A3 | E | 1351 | AR33501 | M | +/- | TSW | 09/94 ▸ 12/96 | 71735378 | **731251** | 546 377,5 | ALM |
| 1.3 i 930A3 | E | 1351 | AR33501 | M | - | TSW | 1995 ▸ 12/96 | 60620437 | **731559** | 545 377,5 | ALM |
| 1.4 i Twin Spark 16V 930A3 | E | 1370 | AR33503 | M | + | TSW | 12/96 ▸ 12/97 | 60625330 | **731561** | 558 377,5 | ALM |
| 1.4 i Twin Spark 16V 930A3 | E | 1370 | AR33503 | M | - | TSW | 02/98 ▸ 06/01 | 46556323 | **731591** | 558 377 | ALM |
| 1.6 i 930A2 | E | 1596 | AR33201 | M | + | TSW | 09/94 ▸ 12/96 | 71735378 | **731251** | 546 377,5 | ALM |
| 1.6 i 930A2 | E | 1596 | AR33201 | M | - | TSW | 1995 ▸ 12/96 | 60620437 | **731559** | 545 377,5 | ALM |
| 1.6 i Twin Spark 16V 930A2 | E | 1598 | AR67601 | M | + | TSW | 12/96 ▸ 12/97 | 60625330 | **731561** | 558 377,5 | ALM |
| 1.6 i Twin Spark 16V 930A2 | E | 1598 | AR32102,AR67601 | M | - | TSW | 06/98 ▸ 06/01 | 46556323 | **731591** | 558 377 | ALM |
| 1.7 i 16V 930A1 | E | 1712 | AR33401 | M | + | TSW | 09/94 ▸ 12/96 | 71735411 | **731251** | 546 377,5 | ALM |
| 1.7 i 16V 930A1 | E | 1712 | AR33401 | M | - | TSW | 09/94 ▸ 12/96 | 71735378 | **731251** | 546 377,5 | ALM |
| 1.8 i Twin Spark 16V 930A1 3163328 ▸ | E | 1747 | AR67199 | M | +/- | TSW | 12/96 ▸ 06/01 | 71735344 | **731561** | 558 377,5 | ALM |
| 1.8 i Twin Spark AGV 16V 930A1 | E | 1747 | AR32201 | M | +/- | | 06/98 ▸ 04/99 | 46736807 | | 554 374,2 | CBS |
| 1.8 i Twin Spark 16V 930A1 ▸ 3163328 | E | 1747 | AR67199 | M | +/- | | 12/96 ▸ 03/98 | 71735342 | | 554 367 | CBS |
| 1.8 i Twin Spark 16V 930A1 ▸ 3163328 | E | 1747 | AR67199 | M | +/- | TSW | 12/96 ▸ 03/98 | 60610873 | **731591** | 558 377 | ALM |
| 2.0 i 16V,2.0 i AGV 16V 930A5 | E | 1970 | AR32301,AR67204,AR67299 | M | +/- | TSW | 11/95 ▸ 06/01 | 71735344 | **731561** | 558 377,5 | ALM |
| 2.0 i 16V 930A5 | E | 1970 | AR67204,AR67299 | M | +/- | | 11/95 ▸ | 71735342 | | 554 367 | CBS |
| 2.0 i 16V 930A5 | E | 1970 | AR67204,AR67299 | M | - | TSW | 11/95 ▸ 06/01 | 60610873 | **731591** | 558 377 | ALM |
| 1.9 JTD 930A4 | D | 1910 | AR32302 | M | +/- | TSW | 03/99 ▸ 06/01 | 71735341 | **731591** | 558 377 | ALM |

Radiator Ψυγείο Vodní chladič Radiator Радиатор vízhűtő Radiador Radyatör Radiator Radiatore di raffreddamento Motorkühler Radiateur Radiator



• **New** Nouveau **Nuevo** Novo **Nuovo** Nieuw **Neu** Nowość **Yeni** Новый Νέο **Novy**

| Type Ctr. | | CC | | AC | | | | OE | Valeo | DIM. | TECH |
|---|---|---|---|---|---|---|---|---|---|---|---|

# ALFA ROMEO (.../...)

## 145 (.../...)

| | | | | | | | | | | | | | |
|---|---|---|---|---|---|---|---|---|---|---|---|---|---|
| 1.9 TD | 930A4 | D | 1929 | AR33601,AR67501 | M | +/- | TSW | 09/94 ▸ 03/99 | 71736177 | **731591** | 558 | 377 | ALM |

## 146

| | | | | | | | | | | | | | |
|---|---|---|---|---|---|---|---|---|---|---|---|---|---|
| 1.3 i | 930B3 | E | 1351 | AR33501 | M | - | TSW | 12/94 ▸ 12/96 | 60620437 | **731559** | 545 | 377,5 | ALM |
| 1.3 i<br>▸ 0073058, 3097817 | 930B3 | E | 1351 | AR33501 | M | + | TSW | 12/94 ▸ | 71735411 | **731251** | 546 | 377,5 | ALM |
| 1.4 i Twin Spark 16V | 930B3 | E | 1370 | AR33503 | M | + | TSW | 12/96 ▸ 06/01 | 60625330 | **731561** | 558 | 377,5 | ALM |
| 1.4 i Twin Spark 16V | 930B3 | E | 1370 | AR33503 | M | - | TSW | 12/96 ▸ 06/01 | 46556323 | **731591** | 558 | 377 | ALM |
| 1.6 i | 930B2 | E | 1596 | AR33201 | M | - | TSW | 12/94 ▸ 12/96 | 60620437 | **731559** | 545 | 377,5 | ALM |
| 1.6 i<br>▸ 3097817, 0073058 | 930B2 | E | 1596 | AR33201 | M | + | TSW | 12/94 ▸ | 71735411 | **731251** | 546 | 377,5 | ALM |
| 1.6 i Twin Spark 16V | 930B2 | E | 1598 | AR67601 | M | + | TSW | 12/96 ▸ 06/01 | 60625330 | **731561** | 558 | 377,5 | ALM |
| 1.6 i Twin Spark 16V | 930B2 | E | 1598 | AR67601 | M | - | TSW | 12/96 ▸ 06/01 | 46556323 | **731591** | 558 | 377 | ALM |
| 1.7 i 16V | 930B1 | E | 1712 | AR33401 | M | +/- | TSW | 12/94 ▸ 12/96 | 71735411 | **731251** | 546 | 377,5 | ALM |
| 1.8 i Twin Spark 16V | 930B1 | E | 1747 | AR67106 | M | + | TSW | 12/96 ▸ 06/01 | 60625330 | **731561** | 558 | 377,5 | ALM |
| 1.8 i Twin Spark 16V<br>1.8 i Twin Spark AGV 16V | 930B1 | E | 1747 | AR32201,AR67106 | M | - | TSW | 12/96 ▸ 06/01 | 46556323 | **731591** | 558 | 377 | ALM |
| 2.0 i 16V | 930B5 | E | 1970 | AR67204 | M | +/- | TSW | 10/95 ▸ 06/01 | 60610873 | **731591** | 558 | 377 | ALM |
| 2.0 i 16V<br>2.0 i Twin Spark AGV 16V | 930B5 | E | 1970 | AR32301,AR67204 | M | +/- | TSW | 06/96 ▸ 06/01 | 71735344 | **731561** | 558 | 377,5 | ALM |
| 1.9 JTD | 930B4 | D | 1910 | AR32302 | M | +/- | | 03/99 ▸ 06/01 | 71735355 | | 554 | 374,2 | CBS |
| 1.9 TDs | 930B4 | D | 1929 | AR33601,AR67501 | M | +/- | TSW | 12/94 ▸ 06/01 | 71736177 | **731591** | 558 | 377 | ALM |

## 147 (2000>2004)

| | | | | | | | | | | | | | |
|---|---|---|---|---|---|---|---|---|---|---|---|---|---|
| 1.6 i Twin Spark 16V | 937/AX/BX | E | 1598 | AR32104,AR37203 | M | +/- | | 10/00 ▸ 09/04 | 51702463 | **732854** | 580 | 414 | ALM |
| 1.6 i Twin Spark 16V | 937/AX/BX | E | 1598 | AR32104 | M | +/- | | 10/00 ▸ 09/04 | 46743394 | •**732730** | 578,6 | 413,75 | ALB |
| 2.0 i Twin Spark 16V | 937/AX/BX | E | 1970 | AR32310 | M | +/- | | 10/00 ▸ 09/04 | 51702463 | **732854** | 580 | 414 | ALM |
| 1.9 JTD,1.9 JTD 16V | 937/AX/BX | D | 1910 | 192B1.000,937A2.000 | M | +/- | | 10/00 ▸ | 46743393 | **734283** | 580 | 425 | ALB |
| 1.9 JTD,1.9 JTD 16V | 937/AX/BX | D | 1910 | 182B9.000,192B1.000,937A2.000<br>937A4.000 | M | +/- | | 10/00 ▸ 09/04 | 46842843 | **734733** | 580 | 400 | ALB |

## 147 (2004>)

| | | | | | | | | | | | | | |
|---|---|---|---|---|---|---|---|---|---|---|---|---|---|
| 1.6 i Twin Spark 16V | 937/AX/BX | E | 1598 | AR32104,AR37203 | M | +/- | | 10/04 ▸ 01/10 | 51702463 | **732854** | 580 | 414 | ALM |
| 2.0 i Twin Spark 16V | 937/AX/BX | E | 1970 | AR32310 | M | +/- | | 10/04 ▸ 11/08 | 51702463 | **732854** | 580 | 414 | ALM |
| 1.9 JTD,1.9 JTD 16V<br>1.9 JTDM | 937/AX/BX | D | 1910 | 182B9.000,192A5.000,192B1.000<br>937A2.000,937A4.000,937A5.000<br>939A7.000 | M | +/- | | 10/04 ▸ | 46842843 | **734733** | 580 | 400 | ALB |
| 1.9 JTD,1.9 JTD 16V<br>1.9 JTDM | 937/AX/BX | D | 1910 | 182B9.000,192A5.000,192B1.000<br>937A2.000,937A4.000,937A5.000<br>939A7.000 | M | +/- | | 10/04 ▸ | 46842846 | **734283** | 580 | 425 | ALB |

## 155

| | | | | | | | | | | | | | |
|---|---|---|---|---|---|---|---|---|---|---|---|---|---|
| 1.6 i Twin Spark 16V | 167A6 | E | 1598 | AR67601 | M | - | TSW | 04/96 ▸ 08/97 | 46556323 | **731591** | 558 | 377 | ALM |
| 1.7 i Twin Spark 16V | 167A4 | E | 1747 | AR67106 | M | - | TSW | 04/96 ▸ 08/97 | 46556323 | **731591** | 558 | 377 | ALM |
| 1.7 i Twin Spark | 167A4 | E | 1749 | AR67103,AR67105 | M | +/- | PIP+<br>TSW | 11/91 ▸ 08/97 | 60806046 | **811071** | 502 | 377,5 | ALM |
| 1.7 i Twin Spark | 167A4 | E | 1749 | AR67103,AR67105 | M | + | PIP+ | 11/91 ▸ 08/97 | 71735346 | | 502 | 377,5 | ALM |
| 1.8 i Twin Spark | 167A4 | E | 1773 | AR67101,AR67102 | M | + | PIP+ | 11/91 ▸ 03/95 | 71735346 | | 502 | 377,5 | ALM |
| 1.8 i Twin Spark | 167A4 | E | 1773 | AR67101,AR67102 | M | +/- | PIP+<br>TSW | 11/91 ▸ 03/95 | 7655948 | **811071** | 502 | 377,5 | ALM |
| 2.0 i Twin Spark 16V | 167A2 | E | 1970 | AR67299 | M | + | | 03/95 ▸ 08/97 | 71735342 | | 554 | 367 | CBS |
| 2.0 i Twin Spark 16V | 167A2 | E | 1970 | AR67299 | M | + | TSW | 03/95 ▸ 08/97 | 60610873 | **731591** | 558 | 377 | ALM |
| 2.0 i Twin Spark 16V | 167A2 | E | 1970 | AR67204 | M | + | TSW | 03/95 ▸ 08/97 | 71735344 | **731561** | 558 | 377,5 | ALM |
| 2.0 i Twin Spark | 167A2 | E | 1995 | AR67201,AR67202 | M | + | PIP+ | 11/91 ▸ 03/95 | 71735346 | | 502 | 377,5 | ALM |
| 2.0 i Twin Spark | 167A2 | E | 1995 | AR67201,AR67202 | M | +/- | PIP+<br>TSW | 11/91 ▸ 03/95 | 60806046 | **811071** | 502 | 377,5 | ALM |
| 2.5 i V6 | 167A1 | E | 2492 | AR67301,AR67302,AR67303 | M | + | PIP+<br>TSW | 11/91 ▸ 08/97 | 60573429 | **811071** | 502 | 377,5 | ALM |
| 1.9 TD | 167A3 | D | 1929 | AR33601,AR67501 | M | + | TSW | 07/93 ▸ 07/97 | 60603939 | **731591** | 558 | 377 | ALM |
| 2.5 TD | 167A1 | D | 2500 | VM07B,VM31B | M | + | | 07/93 ▸ 08/97 | 71735375 | | 554 | 412 | CBS |

## 156 (97>2003)

| | | | | | | | | | | | | | |
|---|---|---|---|---|---|---|---|---|---|---|---|---|---|
| 1.6 i Twin Spark 16V | 932/A4/B4 | E | 1598 | AR32102,AR32103,AR32104<br>AR67601 | M | + | | 09/97 ▸ 03/03 | 60663071 | **732012** | 580 | 414,5 | ALM |
| 1.6 i Twin Spark 16V | 932/A4/B4 | E | 1598 | AR32102,AR32103,AR32104<br>AR67601 | M | - | | 09/97 ▸ 03/03 | 60663070 | **732011** | 520 | 414,5 | ALM |
| 1.8 i Twin Spark 16V | 932B3 | E | 1747 | AR32205 | M | +/- | | 09/00 ▸ 03/03 | 60663071 | **732012** | 580 | 414,5 | ALM |
| 1.8 i Twin Spark 16V | 932/A3/B3 | E | 1747 | AR32201,AR32205 | M | + | | 09/97 ▸ 03/03 | 60651921 | **732013** | 580 | 395 | ALB |
| 1.8 i Twin Spark 16V | 932/A3/B3 | E | 1747 | AR32201,AR32205 | M | - | | 09/97 ▸ 03/03 | 60663070 | **732011** | 520 | 414,5 | ALM |
| 2.0 JTS 16V | 932/AX/BX | E | 1970 | 937A1.000 | M | +/- | | 02/02 ▸ 03/03 | 60651921 | **732013** | 580 | 395 | ALB |

# ALFA ROMEO (.../...)

| Type Ctr. | | CC | | AC | | 2+3 | OE | Valeo | DIM. | TECH |
|---|---|---|---|---|---|---|---|---|---|---|
| **156 (97>2003) (.../...)** | | | | | | | | | | |
| 2.0 i Twin Spark 16V 932/A2/B2 | E | 1970 | AR32301,AR32310 | M | - | | 09/97 ▸ 03/03 | 60663070 | **732011** | 520 414,5 ALM |
| 2.5 i V6 24V 932/A1/B1 | E | 2492 | AR32401,AR32405 | M | +/- | | 09/97 ▸ 03/03 | 60651921 | **732013** | 580 395 ALB |
| 2.5 i V6 24V 932/A1/B1 | E | 2492 | AR32401,AR32405 | A | +/- | | 02/99 ▸ 03/03 | 60651921 | **732013** | 580 395 ALB |
| 1.9 JTD,1.9 JTD 16V 932/A/A2/AX/B2/BX | D | 1910 | 192B1.000,937A2.000,AR32302 AR37101 | M | +/- | | 09/97 ▸ 03/03 | 50501508 | **732248** | 580 394,2 ALB |
| 2.4 JTD 10V 932BX | D | 2387 | 841C.000 | M | +/- | | 09/00 ▸ 03/03 | 50501508 | **732248** | 580 394,2 ALB |
| 2.4 JTD 932/A/A1 | D | 2387 | 839A6.000,AR32501 | M | +/- | | 12/00 ▸ | 60690283 | **732722** | 580 398 ALB |
| **156 (2003>2007)** | | | | | | | | | | |
| 1.6 i Twin spark 16V 932/A4/B4 | E | 1598 | AR32104 | M | +/- | | 04/03 ▸ 06/04 | 60663071 | **732012** | 580 414,5 ALM |
| 1.8 i Twin spark 16V 932/A3/B3 | E | 1747 | AR32205 | M | +/- | | 04/03 ▸ 01/06 | 60663071 | **732012** | 580 414,5 ALM |
| 2.0 JTS 16V 932/A2/AX/B2/BX<br>2.0 JTS TwinSpark 16V<br>2.0 i Twin Spark 16V | E | 1970 | 932A2.000,937A1.000,AR32310 | M | +/- | | 04/03 ▸ | 60690404 | **732013** | 580 395 ALB |
| 2.5 i V6 24V 932/A1/B1 | E | 2492 | AR32405 | M | +/- | | 04/03 ▸ 09/05 | 60690404 | **732013** | 580 395 ALB |
| 2.5 i V6 24V 932/A1/B1 | E | 2492 | AR32405 | A | +/- | | 04/03 ▸ 09/05 | 60690404 | **732013** | 580 395 ALB |
| 3.2 i V6 24V 932/AX/BX | E | 3179 | 932A.000 | M | +/- | | 04/03 ▸ | 60690406 | **735256** | |
| 1.9 JTD,1.9 JTD 16V 932/A2/AX/B2/BX | D | 1910 | 192B1.000,937A2.000,937A5.000 | M | +/- | | 04/03 ▸ 06/07 | 50501508 | **732248** | 580 394,2 ALB |
| 1.9 JTD,1.9 JTD 16V 932/AX/BX | D | 1910 | 192A5.000,937A4.000 | M | +/- | | 04/03 ▸ | 60656716 | **732722** | 580 398 ALB |
| 2.4 JTD 10V,2.4 JTD 20V 932/AX/BX | D | 2387 | 841C.000,841G.000,841M.000 | M | +/- | | 04/03 ▸ 01/06 | 60656716 | **732722** | 580 398 ALB |
| 2.4 JTD 10V 932BX | D | 2387 | 841C.000 | M | +/- | | 04/03 ▸ | 60690283 | **732722** | 580 398 ALB |
| **159** | | | | | | | | | | |
| 1.8 TBi 16V 939/AX/BX | E | 1742 | 939B1.000 | M | +/- | | 06/10 ▸ | 60694769 | **735021** | 649 456 ALB |
| 1.8 MPi 16V 939/AX/BX | E | 1796 | 939A4.000 | M | +/- | | 07/05 ▸ | 71740292 | **735021** | 649 456 ALB |
| 2.2 JTS 16V 939AX | E | 2198 | 939A5.000 | M | + | | 07/05 ▸ | 71740292 | **735021** | 649 456 ALB |
| 3.2 JTS V6 24V 939/AX/BX | E | 3196 | 939A.000 | M | +/- | | 12/05 ▸ | 71740292 | **735021** | 649 456 ALB |
| 1.9 JTDM 16V,1.9 JTDM 8V 939/AX/BX | D | 1910 | 939A1.000,939A2.000,939A7.000 939A8.000 | M | +/- | | 07/05 ▸ | 71740292 | **735021** | 649 456 ALB |
| 1.9 JTDM 16V 939/AX/BX | D | 1910 | 939A2.000,939A8.000 | A | +/- | | 07/05 ▸ | 71740292 | **735021** | 649 456 ALB |
| 2.4 JTDM 20V 939BX | D | 2387 | 939A3.000 | M | +/- | | 07/05 ▸ | 71740292 | **735021** | 649 456 ALB |
| 1.9 JTS 16V 939/AX/BX | E | 1859 | 939A6.000 | M | +/- | | 02/08 ▸ 02/09 | 60694769 | **735021** | 649 456 ALB |
| 2.2 JTS 16V 939/AX/BX | E | 2198 | 939A5.000 | A | +/- | | 07/05 ▸ | 60694769 | **735021** | 649 456 ALB |
| 3.2 JTS V6 24V 939/AX/BX | E | 3196 | 939A.000 | A | +/- | | 02/08 ▸ | 60694769 | **735021** | 649 456 ALB |
| 2.4 JTDM 20V 939/AX/BX | D | 2387 | 939A3.000 | A | +/- | | 07/05 ▸ | 71740292 | **735021** | 649 456 ALB |
| **164 (87>92)** | | | | | | | | | | |
| 2.0 i Twin Spark 164A2 | E | 1962 | AR06420 | M | +/- | TSW | 07/87 ▸ 09/92 | 60507820 | **811068** | 490 415 ALM |
| 2.0 Turbo 164A2 | E | 1995 | AR06476 | M | +/- | | 07/87 ▸ 09/92 | 60510081 | | 520 409,5 CBS |
| 2.0 V6 Turbo 164A2 | E | 1997 | AR64101,AR64102 | M | +/- | | 10/90 ▸ 09/92 | 60574551 | | 520 412 CBS |
| 3.0 i V6 164/A/AB/AD/AG/AH/AX | E | 2959 | AR06410,AR06412,AR64301 | M | +/- | | 07/87 ▸ 09/92 | 71736502 | | 520 409,5 CBS |
| 3.0 i V6 164/AB/AM | E | 2959 | AR06412 | A | +/- | | 07/87 ▸ 09/92 | 60510081 | | 520 409,5 CBS |
| 2.5 TD 164A1 | D | 2500 | VM84A | M | +/- | | 07/87 ▸ 09/92 | 71736502 | | 520 409,5 CBS |
| **166 (98>2003)** | | | | | | | | | | |
| 2.0 i Twin Spark 16V 936A3 | E | 1970 | AR34103,AR36301 | M | +/- | | 10/98 ▸ | 60690408 | **732696** | 658 395 ALB |
| 2.0 i Twin Spark 16V 936A3<br>0001436, 0001437 ▸ | E | 1970 | AR34103,AR36301 | M | + | | 10/98 ▸ | 60663808 | **732505** | 658 414,5 ALM |
| 2.0 i V6 Turbo 936A3 | E | 1996 | AR34102 | M | +/- | | 10/98 ▸ | 60651923 | **732696** | 658 395 ALB |
| 2.0 i V6 Turbo 936A3 | E | 1996 | AR34102 | M | + | TSW | 10/98 ▸ | 60814521 | **731278** | 558 438 ALB |
| 2.5 i V6 24V 936A2 | E | 2492 | AR34201,AR36201 | M | +/- | | 10/98 ▸ | 60690408 | **732696** | 658 395 ALB |
| 2.5 i V6 24V 936A2 | E | 2492 | AR34201 | A | +/- | | 10/98 ▸ | 60690408 | **732696** | 658 395 ALB |
| 3.0 i V6 24V 936A1 | E | 2959 | AR34301,AR36101 | M | +/- | | 10/98 ▸ | 60651923 | **732696** | 658 395 ALB |
| 3.0 i V6 24V 936A1 | E | 2959 | AR34301,AR34302,AR36101 | A | +/- | | 10/98 ▸ | 60690408 | **732696** | 658 395 ALB |
| 2.4 JTD,2.4 JTD 10V 936/A2/AX | D | 2387 | 839A6.000,841C.000,AR34202 | M | + | TSW | 10/98 ▸ 09/03 | 82489087 | **731278** | 558 438 ALB |
| **166 (2003>)** | | | | | | | | | | |
| 2.0 i Twin Spark 16V 936A3 | E | 1970 | AR36301 | M | +/- | | 10/03 ▸ 04/06 | 60690408 | **732696** | 658 395 ALB |
| 2.0 i Twin Spark 16V 936A3 | E | 1970 | AR36301 | M | + | | 10/03 ▸ | 60651922 | **732505** | 658 414,5 ALM |
| 2.0 i Twin Spark 16V 936A3 | E | 1970 | AR36301 | M | + | | 10/03 ▸ 04/06 | 60663808 | **732505** | 658 414,5 ALM |
| 2.5 i V6 24V 936A2 | E | 2492 | AR36201 | M | +/- | | 10/03 ▸ | 60690408 | **732696** | 658 395 ALB |
| 2.5 i V6 24V 936A2 | E | 2492 | AR36201 | M | +/- | | 11/03 ▸ 01/05 | 60652974 | | |
| 3.0 i V6 24V 936A1 | E | 2959 | AR36101 | A | +/- | | 10/03 ▸ | 60690408 | **732696** | 658 395 ALB |
| 3.0 i V6 24V 936A1 | E | 2959 | AR36101 | A | +/- | | 11/03 ▸ 01/06 | 60652974 | | |
| 3.2 i V6 24V 936AX | E | 3179 | 936A6.000 | M | +/- | | 10/03 ▸ | 60690408 | **732696** | 658 395 ALB |
| 2.4 JTD 10V,2.4 JTD 20V 936/A3/AX | D | 2387 | 841C.000,841G.000,841M.000 | M | +/- | TSW | 10/03 ▸ 12/07 | 82489087 | **731278** | 558 438 ALB |
| 2.4 JTD 20V 936AX | D | 2387 | 841H.000,841N.000 | A | +/- | TSW | 10/03 ▸ 12/07 | 82489087 | **731278** | 558 438 ALB |
| **ALFASUD** | | | | | | | | | | |
| 1.2 901/D4/D5 | E | 1186 | AS30102,AS30104 | M | - | TSW 819744 | 01/80 ▸ 12/86 | 60504387 | **811010** | 545 248 ALM |

Radiator Radiateur Motorkühler Radiatore di raffreddamento Radiator Radyatör Radiador Радиатор vízhűtő Vodní chladič Radiator Ψυγείο



• **New** Nouveau **Nuevo** Novo **Nuovo** Nieuw **Neu** Nowość **Yeni** Новый Νέο **Novy**

| Type | Ctr. | CC | | AC | | | OE | Valeo | DIM. | TECH |
|---|---|---|---|---|---|---|---|---|---|---|
| **ALFA ROMEO (.../...)** | | | | | | | | | | |
| **ALFASUD (.../...)** | | | | | | | | | | |
| 1.2,1200 901/A/A2/C/C3/D/D1 D2/D3/D4 ; 904/A/A1/A2/A3 | E | 1186 | AS30100,AS30102,AS30104 AS30110,AS30111 | M | - | TSW 819744 | 01/78 ▸ 12/86 | 60504387 | **811010** | 545 248 | ALM |
| 1.3,1300 901/F/G1 ; 904B 902/A/A2 | E | 1286 | AS30180,AS30184,AS30190 | M | - | TSW 819744 | 01/78 ▸ 07/79 | 60504387 | **811010** | 545 248 | ALM |
| 1.35,1.35 i 901/F3/G4 | E | 1351 | AS30164,AS30168 | M | - | TSW 819744 | 01/80 ▸ 12/86 | 60504387 | **811010** | 545 248 | ALM |
| 1.35,1.35 i,1350 901/F2/F3/G2/G4 904B2 ; 902/04/05 | E | 1351 | AS30156,AS30160,AS30164 AS30168 | M | - | TSW 819744 | 09/78 ▸ 12/86 | 60504387 | **811010** | 545 248 | ALM |
| 1.5,1.5 i 901/F4/G5 | E | 1490 | AS30124,AS30128,AS30133 | M | - | TSW 819744 | 01/80 ▸ 12/86 | 60504387 | **811010** | 545 248 | ALM |
| 1.5,1.5 i,1500 901/F1/F4/G1/G5 902/02/03 | E | 1490 | AS30124,AS30126,AS30128 AS30133,AS30146,AS30198 | M | - | TSW 819744 | 12/78 ▸ 12/86 | 60504387 | **811010** | 545 248 | ALM |
| **ARNA** | | | | | | | | | | |
| 1.2 920/A/AA | E | 1186 | AR31000 | M | - | TSW 819744 | 09/83 ▸ 12/84 | 60504387 | **811010** | 545 248 | ALM |
| 1.2 920/AB/AC | E | 1189 | AR30500 | M | - | TSW 819744 | 11/84 ▸ 1987 | 60504387 | **811010** | 545 248 | ALM |
| 1.3 920A1 | E | 1351 | AR30512,AR31006,AR31010 | M | - | TSW 819744 | 09/83 ▸ 1987 | 60504387 | **811010** | 545 248 | ALM |
| 1.5 920 | | - | | M | - | TSW 819744 | 09/83 ▸ 1987 | 60504387 | **811010** | 545 248 | ALM |
| **BRERA** | | | | | | | | | | |
| 2.2 JTS 16V 939DX | E | 2198 | 939A5.000 | M | +/- | | 01/06 ▸ | 71740292 | **735021** | 649 456 | ALB |
| 3.2 JTS V6 24V 939DX | E | 3196 | 939A.000 | M | +/- | | 01/06 ▸ | 71740292 | **735021** | 649 456 | ALB |
| 2.4 JTDM 20V 939DX | D | 2387 | 939A3.000 | M | +/- | | 01/06 ▸ | 71740292 | **735021** | 649 456 | ALB |
| **GT** | | | | | | | | | | |
| 3.2 V6 24V 937CX | E | 3179 | 936A6.000 | M | +/- | | 09/03 ▸ | 60690406 | **735256** | | |
| 1.9 JTD 16V 937CX | D | 1910 | 937A5.000 | M | +/- | | 09/03 ▸ | 46842843 | **734733** | 580 400 | ALB |
| **GTV (95>2003)** | | | | | | | | | | |
| 1.8 i Twin Spark 16V 916C3 | E | 1747 | AR32201 | M | +/- | TSW | 05/98 ▸ | 60628578 | **731283** | 554 414,5 | ALM |
| 2.0 Twin Spark AGV 16V 916C2 2.0 i Twin Spark 16V | E | 1970 | AR16201,AR32301,AR32310 | M | +/- | TSW | 08/96 ▸ | 60628578 | **731283** | 554 414,5 | ALM |
| 2.0 V6 Turbo 916C2 | E | 1997 | AR16202 | M | + | TSW | 03/95 ▸ | 60585534 | **731283** | 554 414,5 | ALM |
| 3.0 i V6 24V 916C1 | E | 2959 | AR16102 | M | + | | 02/97 ▸ | 71735412 | | 554 412 | CBS |
| 3.0 i V6 24V 916C1 | E | 2959 | AR16102 | M | + | TSW | 05/98 ▸ | 60690407 | **731283** | 554 414,5 | ALM |
| **MITO** | | | | | | | | | | |
| 1.4 TB 155 16V,1.4 TB 16V 145AX ; 955AX | E | 1368 | 199A8.000 | M | +/- | | 04/08 ▸ | 55704135 | **735041** | 620 414,5 | ALB |
| 1.3 MJTD 90 16V 955AX | D | 1248 | 199A3.000/F | M | +/- | | 12/08 ▸ | 51896964 | **735041** | 620 414,5 | ALB |
| 1.6 MJTD 115 16V 955AX | D | 1598 | 955A4.000 | M | +/- | | 04/08 ▸ | 55704135 | **735041** | 620 414,5 | ALB |
| **SPIDER (95>2003)** | | | | | | | | | | |
| 1.8 i Twin Spark 16V 916S3 | E | 1747 | AR32201 | M | +/- | TSW | 02/95 ▸ 02/03 | 60628578 | **731283** | 554 414,5 | ALM |
| 2.0 i Twin Spark 16V 916S2 | E | 1970 | AR16201,AR32301,AR32310 | M | + | TSW | 02/95 ▸ 02/03 | 60628578 | **731283** | 554 414,5 | ALM |
| 3.0 i V6 916S1 | E | 2959 | AR16101,AR16199 | M | + | TSW | 02/95 ▸ 02/03 | 60585534 | **731283** | 554 414,5 | ALM |
| **SPIDER (2003>2006)** | | | | | | | | | | |
| 3.2 i V6 24V 916SX | E | 3179 | 936A6.000 | M | +/- | TSW | 03/03 ▸ 02/06 | 60690407 | **731283** | 554 414,5 | ALM |
| **SPIDER II (2006>)** | | | | | | | | | | |
| 2.2 JTS Twin Spark 16V 939EX | E | 2198 | 939A5.000 | M | + | | 03/06 ▸ | 71740292 | **735021** | 649 456 | ALB |
| 3.2 i V6 24V 939EX | E | 3196 | 939A.000 | M | + | | 03/06 ▸ | 71740292 | **735021** | 649 456 | ALB |
| **SPRINT** | | | | | | | | | | |
| 1.35 902A4 | E | 1351 | AS30168 | M | - | TSW 819744 | 01/80 ▸ 1988 | 60504387 | **811010** | 545 248 | ALM |
| 1.35 902A4 | E | 1351 | AS30168 | M | - | TSW 819744 | 1984 ▸ 1989 | 60504387 | **811010** | 545 248 | ALM |
| 1.5 902A5 | E | 1490 | AS30128,AS30133 | M | - | TSW 819744 | 01/80 ▸ 1988 | 60504387 | **811010** | 545 248 | ALM |
| 1.5,1500,1500 i 902A5 | E | 1490 | AR30146,AR30182,AR30198 AR30520,AS30126,AS30128 | M | - | TSW 819744 | 07/79 ▸ 1989 | 60504387 | **811010** | 545 248 | ALM |
| 1.7 i,1.7 ie 902A6 | E | 1712 | AR30550,AR30558 | M | - | | 04/88 ▸ 1989 | 60504386 | | 543 227 | ALB |
| **ALFA ROMEO** | | | | | | | | | | |
| **AR6** | | | | | | | | | | |
| 2.5 D AR6 | D | 2445 | 8144-61 | M | - | TSW | 02/85 ▸ 12/89 | 5969172 | **883765** | 825 414 | ALM |
| **AR8** | | | | | | | | | | |
| 2.4 D 32AR8 ; 35AR8 ; 40AR8 ; 30A/R8 | D | 2445 | 8140.61 | M | - | | 03/80 ▸ 08/86 | 93802646 | **883787** | 643 451 | ALM |
| **ARO** | | | | | | | | | | |
| **10** | | | | | | | | | | |
| 1.3 | E | 1289 | 810 | M | - | | 04/80 ▸ 12/07 | 0006600000 | | 540 300 | CBS |

| Type Ctr. | | CC | | | AC | | 2+3 | OE | Valeo | DIM. | TECH |
|---|---|---|---|---|---|---|---|---|---|---|---|
| **ARO** (.../...) | | | | | | | | | | | |
| **10 (.../...)** | | | | | | | | | | | |
| 1.4 | E | 1397 | 810R99 | M | - | | 04/80 ▸ 12/07 | 0006600000 | | 540 300 | CBS |
| 1.9 D | D | 1870 | F8Q | M | | TSW | 01/92 ▸ 12/07 | 6001025340 | **730973** | 585 396 | ALB |
| **240** | | | | | | | | | | | |
| 2.5 D | D | 2498 | XD3P | M | | TSW | 1980 ▸ 12/07 | 1300K3 | **730040** | 663 414,5 | ALM |
| **AUDI** | | | | | | | | | | | |
| **80 (72>81)** | | | | | | | | | | | |
| 1.3 | E | 1272 | FY,FZ | M | - | | 09/78 ▸ 07/81 | 811121253 | | 430 322 | ALM |
| 1.3 | E | 1297 | ZA,ZF | M | - | | 05/72 ▸ 07/78 | 321121253C | | 430 340,5 | ALM |
| 1.5 | E | 1471 | YJ,ZB,ZC | M | - | | 03/73 ▸ 08/75 | 321121253C | | 430 340,5 | ALM |
| 1.6 | E | 1588 | FS,XX,YN | M | + | | 09/73 ▸ 08/78 | 823121254D | | 430 340 | CBS |
| 1.6 | E | 1588 | FS,XX,YP,YT | M | - | | 09/73 ▸ 08/78 | 321121253C | | 430 340,5 | ALM |
| 1.6 | E | 1588 | YS | M | - | | 09/75 ▸ 07/78 | 321121253B | | 430 340,5 | ALM |
| 1.6 | E | 1588 | YN | M | - | | 09/75 ▸ 08/78 | 823121251C | | 430 340,5 | ALM |
| 1.6,1.6 i | E | 1588 | WP,WY,YN,YP,YT,YY | M | - | | 08/78 ▸ 12/82 | 811121253 | | 430 322 | ALM |
| 1.6 | E | 1588 | YN,YP | A | + | | 09/75 ▸ 08/78 | 823121254D | | 430 340 | CBS |
| 1.6 | E | 1588 | YN | A | - | | 09/75 ▸ 08/78 | 823121251C | | 430 340,5 | ALM |
| 1.6 | E | 1588 | YP,YT | A | - | | 09/75 ▸ 08/78 | 321121253C | | 430 340,5 | ALM |
| 1.6 | E | 1588 | WP,WY,WZ,YN,YP,YT,YY | A | - | | 09/78 ▸ 07/81 | 811121253 | | 430 322 | ALM |
| 2.2 i 8132 | E | 2144 | WE | M | | TSW | 10/80 ▸ 07/81 | 855121251F | **883863** | 470 377,5 | ALM |
| 2.2 i 8132 | E | 2144 | WE | A | | TSW | 10/80 ▸ 07/81 | 855121251F | **883863** | 470 377,5 | ALM |
| **80 (81>86)** | | | | | | | | | | | |
| 1.3 811/0/1 ; 813/0/1/2 | E | 1297 | EP | M | - | TSW | 08/83 ▸ 07/86 | 811121253F | **819259** | 430 322 | ALM |
| 1.3 811/0/1 ; 813/0/1/2 | E | 1297 | EP | M | | | 08/81 ▸ 07/83 | 811121253 | | 430 322 | ALM |
| 1.6 811/1/2/B/C ; 813/0/1/2/B/C ; 814/0/1/2/B/C | E | 1588 | WV,WY,YP,YZ | M | | | 08/81 ▸ 07/83 | 811121253 | | 430 322 | ALM |
| 1.6 811/1/2 ; 813/0/1/2 ; 814/0/2 | E | 1588 | WV,YP | A | | | 08/81 ▸ 07/83 | 811121253 | | 430 322 | ALM |
| 1.6,1.6 i 811/G/H ; 813/0/1/2 G/H/J | E | 1595 | JU | M | +/- | TSW | 08/83 ▸ 03/87 | 811121253F | **819259** | 430 322 | ALM |
| 1.6 813P | E | 1595 | PP | M | + | TSW | 01/86 ▸ 08/86 | 893121251 | **819260** | 602 302 | CBS |
| 1.6 813/1/2/G/H/J | E | 1595 | DT,JU,SA | M | - | TSW | 08/83 ▸ 03/87 | 811121253F | **819259** | 430 322 | ALM |
| 1.6 813P | E | 1595 | PP | M | - | TSW | 01/86 ▸ 08/86 | 893121253 | **819259** | 430 322 | ALM |
| 1.6 813G | E | 1595 | JU | M | | | 08/81 ▸ 07/83 | 811121253 | | 430 322 | ALM |
| 1.6 813/G/H/J | E | 1595 | SA | M | | | 08/85 ▸ 03/87 | 811121253E | | 602 302 | CBS |
| 1.6,1.6 i 811/G/H ; 813/G/H/J | E | 1595 | JU | A | +/- | TSW | 08/84 ▸ 03/87 | 811121253F | **819259** | 430 322 | ALM |
| 1.6 8141 ; 813/1/2/G/H/J | E | 1595 | DT,SA | A | - | TSW | 08/83 ▸ 03/87 | 811121253F | **819259** | 430 322 | ALM |
| 1.6 8111 | E | 1595 | DT | A | | | 08/81 ▸ 07/83 | 811121253 | | 430 322 | ALM |
| 1.6 813/G/H/J | E | 1595 | SA | A | | | 08/85 ▸ 03/87 | 811121253E | | 602 302 | CBS |
| 1.8 811/1/H ; 813/0/1/2/G/H/J | E | 1781 | JV | M | +/- | | 08/83 ▸ 03/87 | 811121253E | | 602 302 | CBS |
| 1.8,1.8 i 811/0/1/2/5/B/C/G/H L ; 813/0/1/2/5/B/C/G/H/J/L ; 814/0/1/2/5/B C | E | 1781 | DS,DZ,JN,JV,MU,NE,PV,SF | M | - | | 08/81 ▸ 08/87 | 811121253E | | 602 302 | CBS |
| 1.8,1.8 i 811/B/C/H ; 813/C/G 814/B/C | E | 1781 | DS,JN,JV | M | | | 08/81 ▸ 07/83 | 811121253 | | 430 322 | ALM |
| 1.8 i 811G ; 813G | E | 1781 | JN | M | | TSW | 06/84 ▸ 03/87 | 811121253F | **819259** | 430 322 | ALM |
| 1.8 811/1/H ; 813/0/1/2/G/H/J | E | 1781 | JV | A | +/- | | 08/83 ▸ 03/87 | 811121253E | | 602 302 | CBS |
| 1.8 811/1/2/H ; 813/0/1/2/G/H/J ; 814/0/1/2 | E | 1781 | DS,JV,SF | A | - | | 08/83 ▸ 08/87 | 811121253E | | 602 302 | CBS |
| 1.8 i 8140 | E | 1781 | JN | A | | | 08/81 ▸ 01/82 | 811121253 | | 430 322 | ALM |
| 1.8 i 811G ; 8130 | E | 1781 | JN | A | | TSW | 08/83 ▸ 03/87 | 811121253F | **819259** | 430 322 | ALM |
| 1.9 8143 ; 813/2/3 | E | 1921 | WN | M | +/- | TSW | 07/81 ▸ 08/86 | 855121251F | **883863** | 470 377,5 | ALM |
| 1.9 8143 ; 813/2/3 | E | 1921 | WN | M | +/- | TSW | 08/81 ▸ 08/86 | 893121251K | **883863** | 470 377,5 | ALM |
| 1.9 8133 ; 8143 | E | 1921 | WN | A | +/- | TSW | 08/81 ▸ 07/86 | 855121251F | **883863** | 470 377,5 | ALM |
| 2.0 i 8133 | E | 1994 | JS | M | + | TSW | 08/83 ▸ 07/84 | 893121251K | **883863** | 470 377,5 | ALM |
| 2.0 i 811/0 ; 813/0/1/3 ; 8532 ; 814/0/3 81-E-000 001 ▸ | E | 1994 | HP,JS | M | + | TSW | 08/83 ▸ 08/86 | 855121251F | **883863** | 470 377,5 | ALM |
| 2.0 i 813/1/3 | E | 1994 | HP | M | - | TSW | 08/83 ▸ 07/84 | 893121251K | **883863** | 470 377,5 | ALM |
| 2.0 i 8130 ; 8140 ; 8532 ; 811/0 | E | 1994 | JS | M | | TSW | 08/83 ▸ 07/84 | 855121251D | **883863** | 470 377,5 | ALM |
| 2.0 i 8132 ; 8142 | E | 1994 | JL | A | +/- | TSW | 08/83 ▸ 07/84 | 855121251F | **883863** | 470 377,5 | ALM |
| 2.0 i 8143 ; 813/1/2/3 81-E-000 001 ▸ | E | 1994 | HP,JS | A | + | TSW | 08/83 ▸ 07/84 | 855121251F | **883863** | 470 377,5 | ALM |
| 2.0 i 813/1/2/3 | E | 1994 | HP | A | - | TSW | 08/83 ▸ 07/84 | 893121251K | **883863** | 470 377,5 | ALM |
| 2.0 i 8143 ; 813/2/3 | E | 1994 | JS | A | + | TSW | 08/83 ▸ 07/84 | 893121251K | **883863** | 470 377,5 | ALM |
| 2.2,2.2 i 8142 ; 813/2/3 ; 853 2/6 | E | 2144 | KK,KL,WE | M | +/- | TSW | 08/81 ▸ 07/84 | 855121251F | **883863** | 470 377,5 | ALM |
| 2.2 i 8142 | E | 2144 | WE | M | | TSW | 08/81 ▸ 07/83 | 893121251K | **883863** | 470 377,5 | ALM |
| 2.2,2.2 i 853/2/6 | E | 2144 | KK,KL | M | | TSW | 08/82 ▸ 07/84 | 855121251D | **883863** | 470 377,5 | ALM |
| 2.2 i 8132 | E | 2144 | WE | M | | TSW | 08/84 ▸ 07/86 | 811121253F | **819259** | 430 322 | ALM |

Radiator Ψυγείο Vodní chladič Радиатор vízhűtő Radiador Radiator Radyatör Radiator Radiatore di raffreddamento Motorkühler Radiateur



• **New** Nouveau **Nuevo** Novo **Nuovo** Nieuw **Neu** Nowość **Yeni** Новый Νέο **Nový**

# AUDI (.../...)

## 80 (81>86) (.../...)

| | | | CC | | | AC | | | OE | Valeo | DIM. | TECH |
|---|---|---|---|---|---|---|---|---|---|---|---|---|
| 2.2 i | 8142 ; 813/2/3 | E | 2144 | WE | A | +/- | TSW | 07/81 ▸ 07/84 | 855121251F | **883863** | 470 377,5 | ALM |
| 2.2 i | 8133 | E | 2144 | WE | A | | TSW | 08/81 ▸ 12/82 | 893121251K | **883863** | 470 377,5 | ALM |
| 2.2 i | 8132 | E | 2144 | WE | A | | TSW | 08/83 ▸ 07/85 | 811121253F | **819259** | 430 322 | ALM |
| 1.6 D | 811/0/1/2 ; 8141 ; 813/0/1/2 | D | 1588 | CR,JK | M | - | | 08/81 ▸ 03/87 | 811121253E | | 602 302 | CBS |
| 1.6 D | 811/0/1/2 ; 813/0/1/2 | D | 1588 | CR,JK | A | - | | 08/81 ▸ 03/87 | 811121253E | | 602 302 | CBS |

## 80 (86>91)

| | | | | | | | | | | | | |
|---|---|---|---|---|---|---|---|---|---|---|---|---|
| 1.4 | 8930 | E | 1405 | SE | M | +/- | TSW | 09/86 ▸ 07/88 | 893121253A | **730349** | 602 302 | CBS |
| 1.6,1.6 i | 8940 ; 8A20 ; 893/0 | E | 1595 | ABB,PP,RN,RNA | M | + | TSW | 09/86 ▸ 08/91 | 893121251 | **819260** | 602 302 | CBS |
| 1.6 | 8940 ; 8A20 ; 893/0 | E | 1595 | PP,RN,RNA | M | - | TSW | 09/86 ▸ 08/91 | 893121253 | **819259** | 430 322 | ALM |
| 1.6 i | 8A20 | E | 1595 | ABB,PP | M | - | TSW | 08/90 ▸ 08/91 | 893121253A | **730349** | 602 302 | CBS |
| 1.6 i | 8A20 | E | 1595 | ABB | A | + | TSW | 08/90 ▸ 08/91 | 893121251 | **819260** | 602 302 | CBS |
| 1.6,1.6 i | 8A20 | E | 1595 | ABB,RN | A | - | TSW | 08/89 ▸ 08/91 | 893121253A | **730349** | 602 302 | CBS |
| 1.8,1.8 i | 8940 ; 8A20 ; 893/0 0 | E | 1781 | DZ,JN,JV,NE,PM,RU,SF | M | + | TSW | 09/86 ▸ 09/91 | 893121251 | **819260** | 602 302 | CBS |
| 1.8,1.8 i | 8940 ; 8A20 ; 893/0 0 | E | 1781 | JN,JV,NE,PM,SF | M | - | TSW | 09/86 ▸ 09/91 | 893121253A | **730349** | 602 302 | CBS |
| 1.8 | 8940 ; 8A20 ; 893/0 | E | 1781 | RU | M | - | TSW | 10/86 ▸ 01/90 | 893121253 | **819259** | 430 322 | ALM |
| 1.8 i | 8940 ; 8A20 ; 893/0 | E | 1781 | DZ | M | | TSW | 09/86 ▸ 09/91 | 893121253A | **730349** | 602 302 | CBS |
| 1.8,1.8 i | 8940 ; 8A20 ; 893/0 0 | E | 1781 | JN,JV,NE,PM,SF | A | + | TSW | 09/86 ▸ 08/91 | 893121251 | **819260** | 602 302 | CBS |
| 1.8,1.8 i | 8940 ; 8A20 ; 893/0 0 | E | 1781 | JN,JV,NE,PM,RU,SF | A | - | TSW | 09/86 ▸ 08/91 | 893121253A | **730349** | 602 302 | CBS |
| 1.9 i | 8948 ; 893/0/1 | E | 1857 | SD | M | + | TSW | 08/86 ▸ 07/89 | 893121251 | **819260** | 602 302 | CBS |
| 1.9 i | 8948 ; 893/0/1 | E | 1857 | SD | M | - | TSW | 08/86 ▸ 07/89 | 893121253A | **730349** | 602 302 | CBS |
| 1.9 i | 893/0/1 ; 894/1/8 | E | 1857 | SD | A | + | TSW | 08/86 ▸ 07/89 | 893121251 | **819260** | 602 302 | CBS |
| 1.9 i | 893/0/1 ; 894/1/8 | E | 1857 | SD | A | - | TSW | 08/86 ▸ 07/89 | 893121253A | **730349** | 602 302 | CBS |
| 2.0 i 16V | 8A20 | E | 1984 | 6A | M | +/- | TSW | 03/90 ▸ 09/91 | 893121251AA | **731501** | 595 358 | ALB |
| 2.0 i | 8A20 | E | 1984 | AAD | M | +/- | TSW | 07/90 ▸ 09/91 | 893121253A | **730349** | 602 302 | CBS |
| 2.0 i | 8A20 | E | 1984 | AAD | M | +/- | TSW | 08/90 ▸ 08/91 | 893121251 | **819260** | 602 302 | CBS |
| 2.0 i,2.0 i 16V | 8948 ; 8A20 ; 893/0 1/8 | E | 1984 | 3A,6A,AAD | M | + | TSW | 08/88 ▸ 09/91 | 893121251 | **819260** | 602 302 | CBS |
| 2.0 i | 8948 ; 8A20 ; 893/0/1/8 | E | 1984 | 3A | M | - | TSW | 08/88 ▸ 10/90 | 893121253A | **730349** | 602 302 | CBS |
| 2.0 i 16V | 8A20 | E | 1984 | 6A | M | | TSW | 03/90 ▸ 09/91 | 893121253A | **730349** | 602 302 | CBS |
| 2.0 i | 8A20 | E | 1984 | AAD | A | +/- | TSW | 08/90 ▸ 08/91 | 893121253A | **730349** | 602 302 | CBS |
| 2.0 i | 8A20 ; 893/0/1/8 | E | 1984 | 3A,AAD | A | + | TSW | 08/88 ▸ 08/91 | 893121251 | **819260** | 602 302 | CBS |
| 2.0 i | 8A20 ; 893/0/1/8 | E | 1984 | 3A | A | - | TSW | 08/88 ▸ 08/91 | 893121253A | **730349** | 602 302 | CBS |
| 1.6 TD | 8940 ; 8A20 ; 893/0 | D | 1588 | RA,SB | M | +/- | TSW | 04/88 ▸ 08/91 | 893121251 | **819260** | 602 302 | CBS |
| 1.6 D | 8930 | D | 1588 | JK | M | - | TSW | 02/87 ▸ 07/89 | 893121251 | **819260** | 602 302 | CBS |
| 1.9 D | 8A20 | D | 1896 | 1Y | M | - | TSW | 08/89 ▸ 08/91 | 893121251 | **819260** | 602 302 | CBS |

## 80 (91>95)

| | | | | | | | | | | | | |
|---|---|---|---|---|---|---|---|---|---|---|---|---|
| 1.6 i | 8C20 ; 8C50 | E | 1595 | ABB,ADA | M | + | TSW | 03/92 ▸ 07/95 | 8A0121251 | **731422** | 596 358 | ALB |
| 1.6 i | 8C20 ; 8C50 | E | 1595 | ABM,ADA | M | - | TSW | 01/92 ▸ 07/95 | 893121251H | **730972** | 620 322 | ALM |
| 1.6 i | 8C20 ; 8C50 | E | 1595 | ABB,ABM,ADA | M | | TSW | 01/92 ▸ 07/95 | 893121253A | **730349** | 602 302 | CBS |
| 2.0 E | 8C20 ; 8C50 | E | 1984 | ADW | M | +/- | TSW | 12/93 ▸ 06/95 | 893121251H | **730972** | 620 322 | ALM |
| 2.0 E,2.0 S | 8C20 ; 8C50 | E | 1984 | ABK,ABT,ADW | M | + | TSW | 09/91 ▸ 07/95 | 8A0121251 | **731422** | 596 358 | ALB |
| 2.0 E,2.0 S | 8C20 ; 8C50 | E | 1984 | ABK,ABT,ADW | M | - | TSW | 09/91 ▸ 07/95 | 893121251H | **730972** | 620 322 | ALM |
| 2.0 E 16V,2.0 i 16V | 8C20 ; 8C50 | E | 1984 | 6A,ACE | M | - | TSW | 09/91 ▸ 07/95 | 8A0121251 | **731422** | 596 358 | ALB |
| 2.0 E,2.0 S | 8C20 ; 8C50 | E | 1984 | ABK,ABT,ADW | M | | TSW | 09/91 ▸ 07/95 | 893121253A | **730349** | 602 302 | CBS |
| 2.0 E,2.0 S | 8C20 ; 8C50 | E | 1984 | ABK,ABT,ADW | A | + | TSW | 09/91 ▸ 07/95 | 8A0121251 | **731422** | 596 358 | ALB |
| 2.0 E,2.0 S | 8C20 ; 8C50 | E | 1984 | ABK,ABT,ADW | A | - | TSW | 09/91 ▸ 07/95 | 893121251H | **730972** | 620 322 | ALM |
| 2.0 E,2.0 S | 8C20 ; 8C50 | E | 1984 | ABK,ABT,ADW | A | | TSW | 09/91 ▸ 07/95 | 8A0121251A | **731428** | 596 358 | ALB |
| 2.3 E | 8C27 ; 8C57 | E | 2309 | NG | M | + | TSW | 09/91 ▸ 06/95 | 893121251G | **731505** | 477 376 | ALB |
| 2.3 E | 8C27 ; 8C57 | E | 2309 | NG | M | | TSW | 09/91 ▸ 06/95 | 893121251F | **883863** | 470 377,5 | ALM |
| 2.3 E | 8C27 | E | 2309 | NG | A | | TSW | 09/91 ▸ 06/95 | 893121251N | **731760** | 475 375 | ALB |
| 2.6 E V6 | 8C27 ; 8C57 | E | 2598 | ABC,ACZ | M | | TSW | 07/92 ▸ 07/95 | 8A0121251B | **731429** | 596 408 | ALB |
| 2.6 E V6 | 8C27 ; 8C57 | E | 2598 | ABC,ACZ | A | | TSW | 08/92 ▸ 07/95 | 8A0121251C | **731430** | 596 408 | ALB |
| 2.6 E V6 | 8C57 | E | 2598 | ACZ | A | | TSW | 07/93 ▸ 07/95 | 8A0121251B | **731429** | 596 408 | ALB |
| 2.8 i V6 | 8C27 ; 8C57 | E | 2771 | AAH | M | | TSW | 09/91 ▸ 07/95 | 8A0121251B | **731429** | 596 408 | ALB |
| 2.8 i V6 | 8C27 ; 8C57 | E | 2771 | AAH | A | | TSW | 09/91 ▸ 07/95 | 8A0121251C | **731430** | 596 408 | ALB |
| 1.9 TDi | 8C20 ; 8C50 | D | 1896 | 1Z | M | - | TSW | 09/91 ▸ 07/95 | 8A0121251 | **731422** | 596 358 | ALB |
| 1.9 TD | 8C20 | D | 1896 | AAZ | M | | TSW | 09/91 ▸ 06/95 | 8A0121251E | **731503** | 596 408 | ALB |
| 1.9 TD | 8C50 | D | 1896 | AAZ | M | | TSW | 07/93 ▸ 07/95 | 8A0121251 | **731422** | 596 358 | ALB |
| 1.9 TD | 8C20 | D | 1896 | AAZ | A | | TSW | 09/91 ▸ 06/93 | 8A0121251E | **731503** | 596 408 | ALB |
| 1.9 TDi | 8C20 ; 8C50 | D | 1896 | 1Z | A | | TSW | 07/93 ▸ 07/95 | 8A0121251A | **731428** | 596 358 | ALB |

## 90 (84>87)

| | | | | | | | | | | | | |
|---|---|---|---|---|---|---|---|---|---|---|---|---|
| 2.0 i | 8147 ; 813/7/K | E | 1994 | HP,JS | M | + | TSW | 10/84 ▸ 03/87 | 855121251F | **883863** | 470 377,5 | ALM |
| 2.0 i | 8147 ; 813/7/K | E | 1994 | HP,JS | M | - | TSW | 10/84 ▸ 03/87 | 893121251K | **883863** | 470 377,5 | ALM |

# AUDI (.../...)

## 90 (84>87) (.../...)

| | | | CC | | | AC | | | OE | Valeo | DIM. | TECH |
|---|---|---|---|---|---|---|---|---|---|---|---|---|
| 2.0 i | 8137 ; 8147 | E | 1994 | JL | A | +/- | TSW | 10/84 ▸ 03/87 | 855121251F | **883863** | 470 377,5 | ALM |
| 2.0 i | 8147 ; 813/7/K | E | 1994 | HP,JS,SK | A | + | TSW | 10/84 ▸ 03/87 | 855121251F | **883863** | 470 377,5 | ALM |
| 2.0 i | 8147 ; 813/7/K | E | 1994 | HP,JS,SK | A | - | TSW | 10/84 ▸ 03/87 | 893121251K | **883863** | 470 377,5 | ALM |
| 2.2 i | 853/7/K | E | 2226 | JT | M | +/- | TSW | 08/84 ▸ 03/87 | 855121251F | **883863** | 470 377,5 | ALM |
| 2.2 i | 8147 ; 813/7 ; 853/2/6 | E | 2226 | HY,KV | M | + | TSW | 08/84 ▸ 03/87 | 855121251F | **883863** | 470 377,5 | ALM |
| 2.2 i | 853/2/6/7 | E | 2226 | HY,JT | M | + | TSW | 08/84 ▸ 03/87 | 893121251G | **731505** | 477 376 | ALB |
| 2.2 i | 8137 ; 8147 | E | 2226 | HY,KV | M | - | TSW | 10/84 ▸ 03/87 | 893121251K | **883863** | 470 377,5 | ALM |
| 2.2 i | 8137 ; 8147 | E | 2226 | HY,KV | A | + | TSW | 06/84 ▸ 03/87 | 855121251F | **883863** | 470 377,5 | ALM |
| 2.2 i | 8137 ; 8147 | E | 2226 | HY,KV | A | - | TSW | 06/84 ▸ 03/87 | 893121251K | **883863** | 470 377,5 | ALM |

## 90 (87>91)

| | | | | | | | | | | | | |
|---|---|---|---|---|---|---|---|---|---|---|---|---|
| 1.8 i | 8940 ; 8A27 | E | 1781 | DZ | M | + | TSW | 01/88 ▸ 12/91 | 893121251 | **819260** | 602 302 | CBS |
| 1.8 i | 8940 ; 8A27 | E | 1781 | DZ | M | - | TSW | 01/88 ▸ 12/91 | 893121253A | **730349** | 602 302 | CBS |
| 2.0 i | 8947 ; 8A27 ; 893/2/7 | E | 1994 | PS | M | + | TSW | 04/87 ▸ 12/91 | 893121251F | **883863** | 470 377,5 | ALM |
| 2.0 i 20V | 8937 ; 8A27 | E | 1994 | NM | M | + | TSW | 01/88 ▸ 12/91 | 893121251G | **731505** | 477 376 | ALB |
| 2.0 i | 8947 ; 8A27 ; 893/2/7 | E | 1994 | PS | M | - | TSW | 04/87 ▸ 12/91 | 893121251K | **883863** | 470 377,5 | ALM |
| 2.0 i 20V | 8937 ; 8A27 | E | 1994 | NM | M | - | TSW | 01/88 ▸ 12/91 | 893121251F | **883863** | 470 377,5 | ALM |
| 2.0 i 20V | 8937 ; 8A27 | E | 1994 | NM | M | | TSW | 01/88 ▸ 1992 | 093121251F | **883863** | 470 377,5 | ALM |
| 2.0 i | 8937 ; 8947 | E | 1994 | PS | A | + | TSW | 08/87 ▸ 07/89 | 893121251F | **883863** | 470 377,5 | ALM |
| 2.0 i | 8937 ; 8947 | E | 1994 | PS | A | - | TSW | 08/87 ▸ 07/89 | 893121251K | **883863** | 470 377,5 | ALM |
| 2.2 i | 8947 ; 8A27 ; 893/7 | E | 2226 | KV | M | + | TSW | 04/87 ▸ 12/91 | 893121251G | **731505** | 477 376 | ALB |
| 2.2 i | 8937 ; 8947 | E | 2226 | KV | M | + | TSW | 04/87 ▸ 07/89 | 855121251F | **883863** | 470 377,5 | ALM |
| 2.2 i | 8947 ; 8A27 ; 893/7 | E | 2226 | KV | M | - | TSW | 04/87 ▸ 12/91 | 893121251K | **883863** | 470 377,5 | ALM |
| 2.3 i,2.3 i 20V | 894A ; 8A27 ; 893/2 7 | E | 2309 | 7A,NG | M | + | TSW | 04/87 ▸ 12/91 | 893121251G | **731505** | 477 376 | ALB |
| 2.3 i,2.3 i 20V | 893/2/7 ; 8A27 ; 894 7/A | E | 2309 | 7A,NG | M | +/- | TSW | 04/87 ▸ 12/91 | 893121251F | **883863** | 470 377,5 | ALM |
| 2.3 i 20V | 8947 ; 8A27 ; 893/7 | E | 2309 | 7A,NG | A | +/- | TSW | 08/88 ▸ 12/91 | 893121251F | **883863** | 470 377,5 | ALM |
| 2.3 i,2.3 i 20V | 893/2/7 ; 8A27 ; 894 2/7/A | E | 2309 | 7A,NG | A | + | TSW | 08/87 ▸ 12/91 | 893121251E | **731760** | 475 375 | ALB |
| 2.3 i,2.3 i 20V | 893/7 ; 8A27 ; 894/7 A | E | 2309 | 7A,NG | A | + | TSW | 08/88 ▸ 12/91 | 893121251G | **731505** | 477 376 | ALB |
| 2.3 i | 893/2/7 ; 894/7/A | E | 2309 | NG | A | | TSW | 08/87 ▸ 07/89 | 893121251E | **731760** | 475 375 | ALB |
| 2.3 i | 8A27 | E | 2309 | NG | A | | TSW | 08/89 ▸ 12/91 | 893121251N | **731760** | 475 375 | ALB |
| 2.3 i | 8A27 | E | 2309 | NG | A | | TSW | 04/90 ▸ 09/90 | 893121251T | **731760** | 475 375 | ALB |
| 1.6 TD | 8937 ; 8A27 | D | 1588 | RA,SB | M | +/- | TSW | 04/88 ▸ 12/91 | 893121251 | **819260** | 602 302 | CBS |

## 100 (71>82)

| | | | | | | | | | | | | |
|---|---|---|---|---|---|---|---|---|---|---|---|---|
| 2.0 D | 4331 | D | 1986 | CN | M | | TSW | 08/79 ▸ 07/82 | 447121251H | **734738** | 615 310 | CBS |

## 100 (82>90)

| | | | | | | | | | | | | |
|---|---|---|---|---|---|---|---|---|---|---|---|---|
| 1.8 | 443/0/1/2/3/6/C/G/J/P ; 444/0/1/2/6 ; 445/0 1/2/6/G/J/P ; 446/2/6 | E | 1781 | DR,DS,JW,PH,RS,SH | M | +/- | | 08/82 ▸ 07/89 | 443121253C | | 560 270 | CBS |
| 1.8,1.8 i | 443/1/C/G/J/K/P 445/1/2/G/J/K/P 44-J-200 100 ▸ | E | 1781 | 4B,DS,JW,NP,PH,SH | M | + | | 05/83 ▸ 12/90 | 443121251T | | 600 307,8 | ALB |
| 1.8,1.8 i | 443/C/G/J/K/P ; 445 2/G/J/K/P | E | 1781 | 4B,JW,NP,PH,SH | M | - | TSW | 04/85 ▸ 12/90 | 443121253E | **730349** | 602 302 | CBS |
| 1.8 | 4451 | E | 1781 | DS | M | | | 05/83 ▸ 12/83 | 443121253B | | 568 308 | CBS |
| 1.8,1.8 i | 443/J/K/P ; 446P 445/0/G/J/P | E | 1781 | 4B,DS,JW,PH,SH | A | + | | 08/84 ▸ 12/90 | 443121251T | | 600 307,8 | ALB |
| 1.8 | 445/J/K/P | E | 1781 | SH | A | + | | 02/86 ▸ 07/90 | 431121251AB | | 568 308 | CBS |
| 1.8,1.8 i | 443/G/J/K/P ; 445/G J/P | E | 1781 | 4B,JW,NP,PH,SH | A | - | TSW | 04/85 ▸ 12/90 | 443121253E | **730349** | 602 302 | CBS |
| 1.8,1.8 i | 4440 ; 443/0/2/6/G/J K/P ; 4462 ; 445/0/2/J/K/P | E | 1781 | 4B,DR,DS,JW,PH,SH | A | +/- | | 05/83 ▸ 07/90 | 443121253C | | 560 270 | CBS |
| 1.9 | 4440 ; 443/0/1/2/6 ; 445/0/2 | E | 1921 | WH | M | +/- | | 08/82 ▸ | 443121251P | | 568 308 | CBS |
| 1.9 | 4440 ; 443/0/1/2/6 | E | 1921 | WH | A | +/- | | 08/82 ▸ | 431121251AB | | 568 308 | CBS |
| 2.0 i | 443/0/2/6/G/J/K/P ; 444/2/6/P ; 445/0/2/6/G J/K/P ; 446/2/P | E | 1994 | KP,RT,SL | M | +/- | | 08/84 ▸ 12/90 | 443121251K | | 615 308 | CBS |
| 2.0 i | 4442 | E | 1994 | KP,RT,SL | A | +/- | | 08/84 ▸ 07/86 | 443121251T | | 600 307,8 | ALB |
| 2.0 i | 4442 | E | 1994 | KP | A | | TSW | 08/84 ▸ 07/86 | 443121253E | **730349** | 602 302 | CBS |
| 2.0 i | 446P | E | 1994 | RT | A | | TSW | 08/89 ▸ 07/90 | 447121251H | **734738** | 615 310 | CBS |
| 2.2,2.2 i | 4442 ; 443/0/2/6 445/0/2/5/6 ; 446/5/6 | E | 2144 | WB,WC | M | +/- | | 12/83 ▸ 07/84 | 443121251P | | 568 308 | CBS |
| 2.2,2.2 i | 4442 ; 443/0/2/6 445/0/2/5/6 ; 446/5/6 | E | 2144 | WB,WC | A | +/- | | 12/83 ▸ 07/90 | 443121251P | | 568 308 | CBS |
| 2.2 | 443C | E | 2200 | PR | M | + | TSW | 08/89 ▸ 12/90 | 447121251H | **734738** | 615 310 | CBS |
| 2.2 | 443C | E | 2200 | PR | M | - | | 08/89 ▸ 12/90 | 443121251P | | 568 308 | CBS |
| 2.2 | 443C | E | 2200 | PR | A | + | TSW | 08/89 ▸ 12/90 | 447121251H | **734738** | 615 310 | CBS |

Radiator Ψυγείο Vodní chladič Радиатор vízhűtő Radiador Radiator Radyatör Radiator Radiatore di raffreddamento Motorkühler Radiateur Radiator



• **New** Nouveau **Nuevo** Novo **Nuovo** Nieuw **Neu** Nowość **Yeni** Новый Νέο **Nový**

# AUDI (.../...)

## 100 (82>90) (.../...)

| | | | | | | | | | | | | | |
|---|---|---|---|---|---|---|---|---|---|---|---|---|---|
| 2.2 | 443C | E | 2200 | PR | A | - | | 08/89 ▸ 12/90 | 443121251P | | 568 | 308 | CBS |
| 2.2 i | 443J ; 445J | E | 2226 | HX,KF,KU,KZ,PX | M | +/- | | 12/83 ▸ 07/84 | 443121251P | | 568 | 308 | CBS |
| 2.2 Turbo,2.2 i<br>2.2 i Turbo | 443/H/P ; 444/8/H/P<br>445/2/5/H/P ; 446/H<br>P | E | 2226 | HX,KU,MC | M | +/- | | 08/84 ▸ 12/90 | 443121251K | | 615 | 308 | CBS |
| 2.2 Turbo,2.2 i | 445P ; 446P | E | 2226 | KU,MC | M | +/- | TSW | 08/89 ▸ 12/90 | 447121251H | **734738** | 615 | 310 | CBS |
| 2.2 Turbo,2.2 i | 4448 ; 443/0/2/5/6<br>445/2/6 ; 446/8/P | E | 2226 | HX,KF,KU,MC | M | + | | 08/82 ▸ 07/90 | 431121251AB | | 568 | 308 | CBS |
| 2.2,2.2 i | 443/5/D/H/P ; 444/5<br>P ; 445/5/D/H/P ; 446/5/D/P | E | 2226 | HX,KU,PX | M | + | | 10/84 ▸ | 447121251 | | 615 | 308 | CBS |
| 2.2 Turbo | 446P | E | 2226 | MC | M | +/- | TSW | 08/89 ▸ 07/90 | 443121253E | **730349** | 602 | 302 | CBS |
| 2.2 Turbo,2.2 i | 443/H/P ; 444/H/P<br>445/H/P ; 446/H/P | E | 2226 | KU,MC | M | | | > ▸ 12/90 | 447121251 | | 615 | 308 | CBS |
| 2.2 Turbo,2.2 i | 443/2 ; 446P ; 445/2<br>6/J | E | 2226 | HX,KU,MC,WU | M | | | 05/83 ▸ 07/90 | 443121253C | | 560 | 270 | CBS |
| 2.2 i | 4452 | E | 2226 | HX | M | | TSW | 08/84 ▸ 07/86 | 443121253E | **730349** | 602 | 302 | CBS |
| 2.2 i,2.2 i Turbo | 4468 ; 445/2/5/D/P | E | 2226 | HX,KF,KU | M | + | | 09/86 ▸ 07/90 | 431121251T | | 568 | 308 | CBS |
| 2.2 i Turbo | 445/2/5 | E | 2226 | HX,KU | M | | | 01/88 ▸ 07/90 | 443121251H | | 568 | 308 | CBS |
| 2.2 Turbo | 443/P ; 445P ; 446P<br>444/B/P | E | 2226 | MC | A | +/- | TSW | 08/89 ▸ 12/90 | 447121251H | **734738** | 615 | 310 | CBS |
| 2.2,2.2 Turbo,2.2 i<br>2.2 i Turbo | 443/0/2/5/6/7/D/G/H<br>J/K/P/R ; 444/2/5/6<br>7/D/H/P/R ; 445/0/2/5/6/7/D/G/H/J/K/P ; 446<br>6/H/P | E | 2226 | HX,KF,KU,KZ,MC | A | +/- | | 08/82 ▸ 08/89 | 443121251K | | 615 | 308 | CBS |
| 2.2 Turbo,2.2 i | 443/B/P ; 444/6/P<br>445/H/P ; 446/B/P | E | 2226 | KU,MC | A | + | TSW | 08/86 ▸ 12/90 | 447121251H | **734738** | 615 | 310 | CBS |
| 2.2,2.2 i,2.2 i Turbo | 443/0/2/5/6/7/D/G/J<br>K/P/R ; 444/2/5/6/7/8/D/P/R ; 445/0/2/5/6/7<br>D/G/J/K/P ; 446/6/P | E | 2226 | HX,KF,KU,KZ | A | - | | 08/82 ▸ 12/90 | 443121251P | | 568 | 308 | CBS |
| 2.2 i,2.2 i Turbo | 443/5/6 ; 444/5/6<br>4466 ; 445/0/2/5 | E | 2226 | KU | A | - | | 08/84 ▸ 07/90 | 443121253B | | 568 | 308 | CBS |
| 2.2,2.2 i | 4442 ; 443/6/7/G/P<br>445/5/G/J/K/P | E | 2226 | HX,KF,KZ,WU | A | | | 08/83 ▸ 07/89 | 443121251P | | 568 | 308 | CBS |
| 2.2 i | 4448 ; 443/6/7 ; 446P ; 445/0/D/P | E | 2226 | HX,KF,KU,KZ,PX | A | +/- | | 08/83 ▸ 07/90 | 431121251AB | | 568 | 308 | CBS |
| 2.2 Turbo,2.2 i Turbo | 443/P ; 445/2/P | E | 2226 | KU,MC | A | | | 08/84 ▸ 07/89 | 447121251A | | 615 | 264 | CBS |
| 2.3 i | 445H ; 4468 ; 443/G/H/J/K | E | 2309 | NF | M | + | TSW | 08/89 ▸ 07/90 | 447121251H | **734738** | 615 | 310 | CBS |
| 2.3 i | 445P ; 446P | E | 2309 | NF | M | - | | 01/88 ▸ 12/90 | 443121251K | | 615 | 308 | CBS |
| 2.3 i | 444B ; 443/2/B/G/H/J/K/M/P ; 445/8/B/G/H/K/M<br>P ; 446/8/B/M/P | E | 2309 | NF | A | + | | 08/86 ▸ 07/90 | 443121251K | | 615 | 308 | CBS |
| 2.3 i | 444B ; 443/G/H/J/K ; 445/8/B/P ; 446/8/M/P | E | 2309 | NF | A | + | TSW | 08/89 ▸ 07/90 | 447121251H | **734738** | 615 | 310 | CBS |
| 2.0 TD | 443/0/1/2/6 ; 444/0<br>2 ; 4462 ; 445/0/1/2/6 | D | 1986 | DE | M | +/- | | 08/82 ▸ 01/88 | 443121251S | | 568 | 308 | CBS |
| 2.0 TD | 445P ; 446P ; 444/P | D | 1986 | NC | M | +/- | | 03/88 ▸ 12/90 | 443121251K | | 615 | 308 | CBS |
| 2.0 TD | 443P | D | 1986 | NC | M | + | TSW | 08/89 ▸ 12/90 | 447121251H | **734738** | 615 | 310 | CBS |
| 2.0 TD | 443/0/1/2/6 ; 444/0<br>2 ; 4462 ; 445/0/1/2/6 | D | 1986 | DE | A | +/- | | 08/82 ▸ 01/88 | 443121251S | | 568 | 308 | CBS |
| 2.0 TD | 443P | D | 1986 | NC,CN | A | +/- | | 01/88 ▸ 07/88 | 443121251K | | 615 | 308 | CBS |
| 2.0 D | 443/0/2/6/P ; 445/0/6 | D | 1986 | CN | M | +/- | | 08/82 ▸ | 431121251K | | 568 | 308 | CBS |
| 2.4 D | 443P ; 445P | D | 2370 | 3D | M | +/- | TSW | 08/89 ▸ 12/90 | 447121251H | **734738** | 615 | 310 | CBS |
| 2.5 TDi | 443P ; 445P | D | 2460 | 1T | M | +/- | TSW | 01/90 ▸ 12/90 | 447121251H | **734738** | 615 | 310 | CBS |

## 100 (90>94)

| | | | | | | | | | | | | | |
|---|---|---|---|---|---|---|---|---|---|---|---|---|---|
| 1.6,1.6 i | 4A20 ; 4A50 | E | 1595 | ABB,ADA | M | +/- | TSW | 03/92 ▸ 07/94 | 4A0121251D | **730361** | 632 | 414 | ALM |
| 1.6,1.6 i | 4A20 ; 4A50 | E | 1595 | ABB,ADA | M | +/- | | 03/92 ▸ 07/94 | 4A0121251D | | 632 | 414 | ALM |
| 1.6,1.6 i | 4A50 | E | 1595 | ABB,ADA | M | - | TSW | 03/92 ▸ 07/94 | 4A0121251 | **730360** | 632 | 414 | ALM |
| 2.0 16V,2.0 i,2.0 i 16V | 4A20 ; 4A50 | E | 1984 | AAD,AAE,ABK,ACE,ADW | M | +/- | | 12/90 ▸ 07/94 | 4A0121251D | | 632 | 414 | ALM |
| 2.0 16V,2.0 i,2.0 i 16V | 4A20 ; 4A50 | E | 1984 | AAD,AAE,ABK,ACE,ADW | M | +/- | TSW | 12/90 ▸ 07/94 | 4A0121251D | **730361** | 632 | 414 | ALM |
| 2.0 i | 4A20 | E | 1984 | AAD,AAE | M | + | TSW | 12/90 ▸ 07/94 | 4A0121251D | **730361** | 632 | 414 | ALM |
| 2.0 i | 4A20 | E | 1984 | AAD,AAE | M | + | | 12/90 ▸ 07/94 | 4A0121251D | | 632 | 414 | ALM |
| 2.0 i | 4A20 ; 4A50 | E | 1984 | AAD,AAE,ABK | M | - | TSW | 12/90 ▸ 07/94 | 4A0121251 | **730360** | 632 | 414 | ALM |
| 2.0 i | 4A20 ; 4A50 | E | 1984 | AAD,AAE,ABK | A | +/- | | 12/90 ▸ 07/94 | 4A0121251C | | 632 | 412 | ALM |
| 2.0 i | 4A50 | E | 1984 | AAD | A | +/- | | 10/91 ▸ 12/92 | 4A0121251M | | 632 | 407 | CBS |
| 2.0 i | 4A20 | E | 1984 | ADW | A | +/- | | 12/93 ▸ 07/94 | 4A0121251D | | 632 | 414 | ALM |
| 2.0 i | 4A20 | E | 1984 | ADW | A | +/- | TSW | 12/93 ▸ 07/94 | 4A0121251D | **730361** | 632 | 414 | ALM |
| 2.0 i | 4A20 | E | 1984 | AAD,AAE | A | + | TSW | 12/90 ▸ 06/93 | 4A0121251D | **730361** | 632 | 414 | ALM |
| 2.0 i | 4A20 | E | 1984 | AAD,AAE | A | + | | 12/90 ▸ 06/93 | 4A0121251D | | 632 | 414 | ALM |
| 2.0 i | 4A20 | E | 1984 | ABK | A | | | 01/93 ▸ 07/94 | 4A0121251D | | 632 | 414 | ALM |
| 2.0 i | 4A20 | E | 1984 | ABK | A | | TSW | 01/93 ▸ 07/94 | 4A0121251D | **730361** | 632 | 414 | ALM |
| 2.2 i Turbo 20V | 4A28 ; 4A58 | E | 2226 | AAN | M | +/- | TSW | 08/91 ▸ 07/94 | 4A0121251A | **730361** | 632 | 414 | ALM |
| 2.2 i Turbo 20V | 4A28 ; 4A58 | E | 2226 | AAN | A | +/- | | 08/91 ▸ 07/94 | 4A0121251C | | 632 | 412 | ALM |

# AUDI (.../...)

## 100 (90>94) (.../...)

| | | | CC | | | AC | | | OE | Valeo | DIM. | | TECH |
|---|---|---|---|---|---|---|---|---|---|---|---|---|---|
| 2.3 i | 4A20 ; 4A50 | E | 2309 | AAR | M | +/- | TSW | 12/90 ▸ 07/94 | 4A0121251D | 730361 | 632 | 414 | ALM |
| 2.3 i | 4A20 ; 4A50 | E | 2309 | AAR | M | - | TSW | 12/90 ▸ 07/94 | 4A0121251 | 730360 | 632 | 414 | ALM |
| 2.3 i | 4A20 ; 4A50 | E | 2309 | AAR | A | +/- | | 12/90 ▸ 07/94 | 4A0121251C | | 632 | 412 | ALM |
| 2.3 i | 4A20 | E | 2309 | AAR | A | +/- | TSW | 12/90 ▸ 07/94 | 4A0121251D | 730361 | 632 | 414 | ALM |
| 2.6 V6,2.6 i V6 | 4A2/0/7 ; 4A5/0/7 | E | 2598 | ABC,ACZ | M | +/- | TSW 819769 | 03/92 ▸ 07/94 | 4A0121251Q | 734751 | 632 | 412 | ALM |
| 2.6 V6,2.6 i V6 | 4A2/0/7 ; 4A5/0/7 | E | 2598 | ABC,ACZ | M | - | TSW 819769 | 03/92 ▸ 07/94 | 4A0121251K | 730363 | 632 | 414 | ALM |
| 2.6 V6,2.6 i V6 | 4A2/0/7 ; 4A5/0/7 | E | 2598 | ABC,ACZ | A | +/- | | 04/92 ▸ 07/94 | 4A0121251M | | 632 | 407 | CBS |
| 2.6 i V6 | 4A50 ; 4A2/0/7 | E | 2598 | ABC,ACZ | A | + | TSW 819769 | 04/92 ▸ 07/94 | 4A0121251Q | 734751 | 632 | 412 | ALM |
| 2.8 i V6<br>N-115 191, N080001 ▸ | 4A50 ; 4A2/0/7 | E | 2771 | AAH | M | - | TSW 819769 | 12/90 ▸ 07/94 | 4A0121251K | 730363 | 632 | 414 | ALM |
| 2.8 i V6 | 4A20 | E | 2771 | AAH | M | +/- | TSW 819769 | 12/90 ▸ 07/94 | 4A0121251G | 730362 | 632 | 414 | ALM |
| 2.8 i V6<br>N-115 191, N080001 ▸ | 4A20 ; 4A50 | E | 2771 | AAH | A | +/- | | > ▸ 07/94 | 4A0121251M | | 632 | 407 | CBS |
| 2.8 i V6<br>▸ 4A-N-115 190 | 4A20 ; 4A50 | E | 2771 | AAH | A | +/- | TSW 819769 | 12/90 ▸ | 4A0121251H | 730362 | 632 | 414 | ALM |
| 2.8 i V6<br>▸ 4A-N-115 190, N-115 190 | 4A50 ; 4A2/0/7 | E | 2771 | AAH | M | - | TSW 819769 | 12/90 ▸ | 4A0121251J | 730362 | 632 | 414 | ALM |
| 4.2 i V8 32V | 4A28 ; 4A58 | E | 4172 | ABH | M | +/- | | 10/92 ▸ 07/94 | 4A0121251B | | 632 | 412 | ALM |
| 2.4 D | 4A20 ; 4A50 | D | 2370 | AAS | M | +/- | TSW | 05/91 ▸ 07/94 | 4A0121251A | 730361 | 632 | 414 | ALM |
| 2.4 D | 4A20 ; 4A50 | D | 2370 | AAS | M | - | TSW | 05/91 ▸ 07/94 | 4A0121251E | 730360 | 632 | 414 | ALM |
| 2.4 D | 4A20 | D | 2370 | AAS | A | +/- | TSW | 12/90 ▸ 07/91 | 4A0121251A | 730361 | 632 | 414 | ALM |
| 2.4 D | 4A20 | D | 2370 | AAS | A | | | 12/90 ▸ 07/91 | 4A0121251C | | 632 | 412 | ALM |
| 2.5 TDi | 4A20 ; 4A50 | D | 2460 | AAT,ABP | M | +/- | TSW | 06/91 ▸ 07/94 | 4A0121251D | 730361 | 632 | 414 | ALM |
| 2.5 TDi | 4A20 ; 4A50 | D | 2460 | AAT,ABP | M | - | TSW | 06/91 ▸ 07/94 | 4A0121251 | 730360 | 632 | 414 | ALM |
| 2.5 TDi | 4A20 ; 4A50 | D | 2460 | AAT | A | +/- | | 01/93 ▸ 07/94 | 4A0121251C | | 632 | 412 | ALM |

## 4000

| | | | | | | | | | | | | | |
|---|---|---|---|---|---|---|---|---|---|---|---|---|---|
| 2.2 5E | | E | 2144 | WE | A | - | TSW | 01/80 ▸ 07/84 | 893121251F | 883863 | 470 | 377,5 | ALM |
| 2.2 | | E | 2226 | JT | A | - | TSW | 12/83 ▸ 03/87 | 893121251F | 883863 | 470 | 377,5 | ALM |

## A2 (2000>2005)

| | | | | | | | | | | | | | |
|---|---|---|---|---|---|---|---|---|---|---|---|---|---|
| 1.4 i 16V | 8Z00 | E | 1390 | AUA,BBY | M | + | TSW 820305 | 06/00 ▸ 08/05 | 8Z0121251D | 732785 | 468 | 395,3 | ALB |
| 1.4 i 16V | 8Z00 | E | 1390 | AUA,BBY | M | - | TSW 820305 | 06/00 ▸ 08/05 | 8Z0121251C | 733074 | 450 | 403,3 | ALM |
| 1.6 FSI 16V | 8Z00 | E | 1595 | BAD | M | + | TSW 820305 | 05/02 ▸ 08/05 | 8Z0121251D | 732785 | 468 | 395,3 | ALB |
| 1.2 TDi | 8Z0/D/E | D | 1191 | ANY | M | + | TSW 820305 | 03/01 ▸ 08/05 | 8Z0121251D | 732785 | 468 | 395,3 | ALB |
| 1.2 TDi | 8Z0/D/E | D | 1191 | ANY | M | - | TSW 820305 | 03/01 ▸ 08/05 | 8Z0121251C | 733074 | 450 | 403,3 | ALM |
| 1.4 TDi | 8Z00 | D | 1422 | AMF,ATL,BHC | M | +/- | TSW 820305 | 06/00 ▸ 08/03 | 8Z0121251D | 732785 | 468 | 395,3 | ALB |

## A3 (96>2003)

| | | | | | | | | | | | | | |
|---|---|---|---|---|---|---|---|---|---|---|---|---|---|
| 1.6 i | 8L1/0/A/B/C/H | E | 1595 | AEH,AKL,APF,AVU,BFQ | M | +/- | TSW | 09/96 ▸ 06/03 | 1J0121253AD | 731606 | 414,5 | 650 | ALM |
| 1.6 i | 8L1/0/A/B/C/H | E | 1595 | AEH,AKL,APF,AVU,BFQ | M | +/- | TSW | 09/96 ▸ | 1J0121253N | 732175 | 650 | 414,5 | ALM |
| 1.6 i | 8L1/0/A/B/C/H | E | 1595 | AEH,AKL,APF,AVU,BFQ | A | +/- | TSW | 09/96 ▸ | 1J0121253P | 731606 | 414,5 | 650 | ALM |
| 1.6 i | 8L1/0/A/B/C/H | E | 1595 | AEH,AKL,APF,AVU,BFQ | A | +/- | TSW | 09/96 ▸ | 1J0121253N | 732175 | 650 | 414,5 | ALM |
| 1.8 i 20V,1.8 i Turbo 20V | 8L1/0/A/B/C/H | E | 1781 | AGN,AGU,AJQ,APG,APP,AQA,ARX ARY,ARZ,AUM,AUQ | M | +/- | TSW | 09/96 ▸ 06/03 | 1J0121253AD | 731606 | 414,5 | 650 | ALM |
| 1.8 i 20V | 8L1/0/A/B/C/H | E | 1781 | AGN,APG | M | - | TSW | 09/96 ▸ | 1J0121253N | 732175 | 650 | 414,5 | ALM |
| 1.8 i 20V,1.8 i Turbo 20V | 8L1/0/A/B/C/H | E | 1781 | AGN,AGU,AJQ,APG,AQA,ARX,ARY ARZ,AUM,AUQ | A | +/- | TSW | 09/96 ▸ 06/03 | 1J0121253AD | 731606 | 414,5 | 650 | ALM |
| 1.8 i 20V | 8L1/0/A/B/C/H | E | 1781 | AGN,APG | A | - | TSW | 09/96 ▸ | 1J0121253N | 732175 | 650 | 414,5 | ALM |
| 1.9 TDi | 8L1/0/A/B/C/H | D | 1896 | AGR,AHF,ALH,ASV,ASZ,ATD,AXR | M | +/- | TSW | 09/96 ▸ 06/03 | 1J0121253AD | 731606 | 414,5 | 650 | ALM |
| 1.9 TDi | 8L1/0/A/B/C/H | D | 1896 | AGR,AHF,ALH,ASV,ASZ,ATD,AXR | M | - | TSW | 09/96 ▸ 06/03 | 1J0121253N | 732175 | 650 | 414,5 | ALM |
| 1.9 TDi | 8L1/0/A/B/C/H | D | 1896 | AGR,AHF,ALH,ASV,ASZ,ATD | A | +/- | TSW | 09/96 ▸ 06/03 | 1J0121253AD | 731606 | 414,5 | 650 | ALM |
| 1.9 TDi | 8L1/0/A/B/C/H | D | 1896 | AGR,AHF,ALH,ASV,ASZ,ATD | A | - | TSW | 09/96 ▸ 06/03 | 1J0121253N | 732175 | 650 | 414,5 | ALM |

## A3 (2003>2008)

| | | | | | | | | | | | | | |
|---|---|---|---|---|---|---|---|---|---|---|---|---|---|
| 1.4 TFSi | 8P1/A/B/C ; 8PA/A/B C | E | 1390 | CAXC | M | +/- | TSW | 09/07 ▸ 06/08 | 1K0121253AP | 732872 | 650 | 414,5 | ALM |
| 1.4 TFSi | 8P1/A/B/C ; 8PA/A/B C | E | 1390 | CAXC | A | +/- | TSW | 03/08 ▸ 06/08 | 1K0121253BB | 732872 | 650 | 414,5 | ALM |
| 1.6 i | 8P1/A/B/C ; 8PA/A/B/C | E | 1595 | BGU,BSE,BSF | M | +/- | TSW | 05/03 ▸ | 1K0121251P | 734332 | 640 | 414,5 | ALM |
| 1.6 i | 8P1/A/B/C ; 8PA/A/B/C | E | 1595 | BGU,BSE,BSF | M | +/- | TSW | 05/03 ▸ | 1K0121251BQ | 734335 | 640 | 414,5 | ALM |
| 1.6 i | 8P1/A/B/C ; 8PA/A/B/C | E | 1595 | BGU,BSE,BSF | A | +/- | TSW | 09/03 ▸ | 1K0121251BR | 734335 | 640 | 414,5 | ALM |
| 1.6 i | 8P1/A/B/C ; 8PA/A/B/C | E | 1595 | BSE,BSF,BGU | A | +/- | TSW | 06/05 ▸ | 1K0121251P | 734332 | 640 | 414,5 | ALM |
| 1.6 FSi | 8P1/A/B/C ; 8PA/A/B C | E | 1598 | BAG,BLF,BLP | M | +/- | TSW | 08/03 ▸ | 1K0121251P | 734332 | 640 | 414,5 | ALM |
| 1.6 FSi | 8P1/A/B/C ; 8PA/A/B C | E | 1598 | BAG,BLF,BLP | M | +/- | TSW | 08/03 ▸ | 1K0121251BR | 734335 | 640 | 414,5 | ALM |
| 1.8 TFSi | 8P1/A/B/C ; 8PA/A/B C | E | 1798 | BYT | M | +/- | | 01/07 ▸ 06/07 | 1K0121251L | | | | |

Radiator Radiateur Motorkühler Radiatore di raffreddamento Radiator Radyatör Radiador Радиатор vízhűtő Vodní chladič Radiator Ψυγείο



• **New** Nouveau **Nuevo** Novo **Nuovo** Nieuw **Neu** Nowość **Yeni** Новый Νέο **Nový**

# AUDI (.../...)

## A3 (2003>2008) (.../...)

| | | | CC | | | AC | | | | Valeo | DIM. | TECH |
|---|---|---|---|---|---|---|---|---|---|---|---|---|
| 1.8 TFSi | 8P1/A/B/C ; 8PA/A/B C | E | 1798 | BYT | A | +/- | | 01/07 ▸ 06/07 | 1K0121251L | | | |
| 2.0 FSi 16V | 8P1/A/B/C ; 8PA/A/B C | E | 1984 | AXW,BLR,BLX,BLY,BMB,BVY,BVZ | M | +/- | TSW | 05/03 ▸ | 1K0121251AR | **735120** | 650 414,5 | ALM |
| 2.0 TFSi 16V | 8P1/A/B/C ; 8PA/A/B C | E | 1984 | AXX,BWA | M | +/- | Air Seal | 09/04 ▸ 06/08 | 1K0121251DM | **734333** | 650 454,3 | ALB |
| 2.0 FSi 16V | 8P1/A/B/C | E | 1984 | AXW,BLX,BVZ | M | +/- | TSW | 05/03 ▸ | 1K0121251F | **734335** | 640 414,5 | ALM |
| 2.0 FSi 16V | 8P1/A/B/C ; 8PA/A/B C | E | 1984 | AXW,BLR,BLX,BLY,BMB,BVY,BVZ | A | +/- | TSW | 05/03 ▸ | 1K0121251AR | **735120** | 650 414,5 | ALM |
| 2.0 TFSi 16V | 8P1B ; 8PAB | E | 1984 | AXX,BWA | A | +/- | Air Seal | 09/04 ▸ | 1K0121251N | **734333** | 650 454,3 | ALB |
| 2.0 FSi 16V | 8PAB | E | 1984 | BVZ | A | +/- | TSW | 11/05 ▸ 06/08 | 1K0121251BR | **734335** | 640 414,5 | ALM |
| 2.0 TFSi 16V | 8P1/B/C ; 8PA/B/C | E | 1984 | CAWB | A | +/- | | 10/07 ▸ 06/08 | 5K0121251J | | | |
| 1.9 TDi | 8P1/A/B/C ; 8PA/A/B C | D | 1896 | BKC,BXE | M | +/- | TSW | 06/03 ▸ | 1K0121253H | **732872** | 650 414,5 | ALM |
| 1.9 TDi | 8P1/A/B/C ; 8PA/A/B C | D | 1896 | BKC,BXE | A | +/- | TSW | 03/06 ▸ | 1K0121253AA | **732872** | 650 414,5 | ALM |
| 2.0 TDi 16V | 8P1/A/B/C ; 8PA/A/B C/Z | D | 1968 | AZV,BKD,BMN,BUY | M | +/- | Air Seal | 05/03 ▸ | 1K0121251N | **734333** | 650 454,3 | ALB |
| 2.0 TDi | 8P1/A/B/C ; 8PA/A/B C | D | 1968 | BMM/F | M | +/- | | 01/05 ▸ | 1K0121251AL | | 650 451 | ALM |
| 2.0 TDi 16V | 8P1/A/B/C ; 8PA/A/B C | D | 1968 | AZV,BKD,BMN,BUY | A | +/- | Air Seal | 05/03 ▸ | 1K0121251DM | **734333** | 650 454,3 | ALB |
| 2.0 TDi | 8P1/A/B/C ; 8PA/A/B C | D | 1968 | BMM/F | A | +/- | | 06/05 ▸ | 1K0121251AL | | 650 451 | ALM |

## A3 (2008>)

| | | | | | | | | | | | | |
|---|---|---|---|---|---|---|---|---|---|---|---|---|
| 1.4 TFSi 125 16V | 8P1/A/B/C ; 8PA/A/B C | E | 1390 | CAXC | M | +/- | TSW | 07/08 ▸ | 1K0121253BB | **732872** | 650 414,5 | ALM |
| 1.4 TFSi 125 16V | 8P1/A/B/C ; 8PA/A/B C | E | 1390 | CAXC | A | +/- | TSW | 07/08 ▸ | 1K0121253BB | **732872** | 650 414,5 | ALM |
| 2.0 TFSi 200 16V | 8P1/A/B/C ; 8PA/A/B C | E | 1984 | CCZA | M | +/- | | 07/08 ▸ 06/10 | 1K0121251L | | | |
| 2.0 TFSi 200 16V | 8PAB | E | 1984 | BWA | M | | Air Seal | 07/08 ▸ 05/09 | 1K0121251AB | **734333** | 650 454,3 | ALB |
| 2.0 TFSi 200 16V | 8P1/B/C ; 8PA/B/C | E | 1984 | CCZA | A | +/- | | 07/08 ▸ 06/10 | 1K0121251L | | | |
| 2.0 TFSi 200 16V | 8PAB | E | 1984 | BWA | A | | Air Seal | 07/08 ▸ 05/09 | 1K0121251AB | **734333** | 650 454,3 | ALB |
| 1.6 TDi 105,1.6 TDi 90<br>1.6 TDie 105 | 8P1/A/B/C/E ; 8PA/A B/C/E | D | 1598 | CAYB/F,CAYC/F | M | | Air Seal | 05/09 ▸ | 1K0121251DM | **734333** | 650 454,3 | ALB |
| 1.6 TDi 105 | 8P1/A/B/C ; 8PA/A/B C | D | 1598 | CAYC/F | A | | Air Seal | 11/09 ▸ | 1K0121251DD | **734333** | 650 454,3 | ALB |
| 2.0 TDi 136 16V<br>2.0 TDi 140 16V<br>2.0 TDi 170 16V | 8P1/A/B/C ; 8PA/A/B C | D | 1968 | CBAA/F,CBAB/F,CBBB/F | M | +/- | Air Seal | 07/08 ▸ | 1K0121251BK | **734333** | 650 454,3 | ALB |
| 2.0 TDi 136 16V<br>2.0 TDi 140 16V<br>2.0 TDi 170 16V | 8P1/A/B/C ; 8PA/A/B C | D | 1968 | CBAA/F,CBAB/F,CBBB/F | A | +/- | Air Seal | 07/08 ▸ | 1K0121251DM | **734333** | 650 454,3 | ALB |

## A3 CABRIOLET (2008>)

| | | | | | | | | | | | | |
|---|---|---|---|---|---|---|---|---|---|---|---|---|
| 2.0 TFSi 200 16V | 8P7/A/B | E | 1984 | CAWB,CCZA | M | +/- | | 04/08 ▸ | 5K0121251J | | | |
| 2.0 TFSi 200 16V | 8P7B | E | 1984 | CAWB,CCZA | A | +/- | | 04/08 ▸ | 1K0121251L | | | |
| 1.6 TDi CR 105 | 8P7/A/B | D | 1598 | CAYC/F | M | | Air Seal | 05/09 ▸ | 1K0121251DM | **734333** | 650 454,3 | ALB |
| 2.0 TDi 136 16V<br>2.0 TDi 140 16V | 8P7/A/B | D | 1968 | CBAA/F,CBAB/F | M | + | Air Seal | 04/08 ▸ | 1K0121251BK | **734333** | 650 454,3 | ALB |
| 2.0 TDi 136 16V<br>2.0 TDi 140 16V | 8P7/A/B | D | 1968 | CBAA/F,CBAB/F | A | + | Air Seal | 04/08 ▸ | 1K0121251BK | **734333** | 650 454,3 | ALB |

## A4 (94>98)

| | | | | | | | | | | | | |
|---|---|---|---|---|---|---|---|---|---|---|---|---|
| 1.6 i | 8D2/0/H ; 8D5/0/H | E | 1595 | ADP,AHL,ANA,ARM | M | + | TSW | 11/94 ▸ 12/98 | 8D0121251P | **732361** | 632 414,5 | ALM |
| 1.6 i | 8D2/0/H ; 8D5/0/H | E | 1595 | ADP,AHL,ANA,ARM | M | - | TSW | 11/94 ▸ 12/98 | 8D0121251Q | **731537** | 632 414 | ALM |
| 1.6 i | 8D2/0/H ; 8D5/0/H | E | 1595 | ADP,AHL,ANA | A | +/- | TSW | 11/94 ▸ 12/98 | 8D0121251M | **731755** | 630 412,3 | ALM |
| 1.6 i | 8D50 | E | 1595 | AHL | A | - | TSW | 10/96 ▸ 07/97 | 8D0121251Q | **731537** | 632 414 | ALM |
| 1.6 i | 8D5H | E | 1595 | ADP | A | | TSW | 11/94 ▸ 10/96 | 8D0121251L | **731757** | 630 412 | ALM |
| 1.8 i Turbo 20V | 8D2/0/H ; 8D5/0/H | E | 1781 | AJL | M | +/- | TSW | 10/97 ▸ 12/98 | 8D0121251M | **731755** | 630 412,3 | ALM |
| 1.8 i 20V | 8D50 | E | 1781 | ARG | M | +/- | TSW | 08/98 ▸ 12/98 | 8D0121251N | **731756** | 632 396 | ALM |
| 1.8 i 20V,1.8 i Turbo 20V | 8D2/0/H/S/T ; 8D5/0 H/S | E | 1781 | ADR,AEB,AFY,AJL,APU,ARG,ARK | M | + | TSW | 11/94 ▸ 12/98 | 8D0121251P | **732361** | 632 414,5 | ALM |
| 1.8 i Turbo 20V | 8D20 | E | 1781 | APU | M | + | TSW | 08/98 ▸ 12/98 | 8D0121251Q | **731537** | 632 414 | ALM |
| 1.8 i 20V,1.8 i Turbo 20V | 8D2/0/H/S/T ; 8D5/0 H/S | E | 1781 | ADR,AEB,AFY,AJL,APU,ARG,ARK | M | - | TSW | 11/94 ▸ 12/98 | 8D0121251Q | **731537** | 632 414 | ALM |
| 1.8 i 20V,1.8 i Turbo 20V | 8D2/0/H/S ; 8D5/0/H S | E | 1781 | ADR,AEB,AFY,APU,ARG,ARK | A | +/- | TSW | 11/94 ▸ 12/98 | 8D0121251BC | **731755** | 630 412,3 | ALM |

# AUDI (.../...)

## A4 (94>98) (.../...)

| Type Ctr. | | CC | | AC | | | OE | Valeo | DIM. | TECH |
|---|---|---|---|---|---|---|---|---|---|---|
| 2.4 i V6,2.4 i V6 30V 8D2/0/H/S ; 8D5/0/H | E | 2393 | AFM,AGA,AJG,ALF,AML,APS,APZ ARJ | M | +/- | TSW | 07/95 ▸ 12/98 | 8D0121251N | **731756** | 632 396 | ALM |
| 2.4 i V6 8D20 ; 8D50 | E | 2393 | AJG | M | + | TSW | 08/97 ▸ 07/98 | 8D0121251P | **732361** | 632 414,5 | ALM |
| 2.4 i V6 8D20 ; 8D50 | E | 2393 | AJG | M | - | TSW | 08/97 ▸ 07/98 | 8D0121251Q | **731537** | 632 414 | ALM |
| 2.4 i V6,2.4 i V6 30V 8D50 ; 8D2/0/H/S | E | 2393 | AGA,AJG,ALF,AML,APS,APZ,ARJ | A | +/- | TSW | 08/97 ▸ 12/98 | 8D0121251L | **731757** | 630 412 | ALM |
| 2.4 i V6 30V 8D20 | E | 2393 | APZ | A | | TSW | 08/98 ▸ 12/98 | 8D0121251BC | **731755** | 630 412,3 | ALM |
| 2.6 i V6 8D2/0/H/S ; 8D5/0/H S | E | 2598 | ABC,ACZ | M | +/- | TSW | 11/94 ▸ 12/98 | 8D0121251N | **731756** | 632 396 | ALM |
| 2.6 i V6 8D2/0/H/S ; 8D5/0/H S | E | 2598 | ABC,ACZ | A | +/- | TSW | 11/94 ▸ 07/98 | 8D0121251L | **731757** | 630 412 | ALM |
| 2.8 i V6,2.8 i V6 30V 8D2/0/H/S ; 8D5/0/H | E | 2771 | AAH,ACK,ALG,AMX,APR,AQD | M | +/- | TSW | 11/94 ▸ 12/98 | 8D0121251N | **731756** | 632 396 | ALM |
| 2.8 i V6,2.8 i V6 30V 8D2/0/H/S ; 8D5/0/H | E | 2771 | AAH,ACK,ALG,AMX,APR,AQD | A | +/- | TSW | 02/95 ▸ 12/98 | 8D0121251L | **731757** | 630 412 | ALM |
| 2.8 i V6 8D2/0/H | E | 2771 | AAH | A | | TSW | 02/95 ▸ 07/97 | 8D0121251M | **731755** | 630 412,3 | ALM |
| 1.9 TDi 8D50 | D | 1896 | AHH | M | +/- | TSW | 04/97 ▸ 12/98 | 8D0121251M | **731755** | 630 412,3 | ALM |
| 1.9 TDi 8D2/0/H ; 8D5/0/H | D | 1896 | 1Z,AFF,AFN,AHH,AHU,AJM | M | + | TSW | 11/94 ▸ 12/98 | 8D0121251P | **732361** | 632 414,5 | ALM |
| 1.9 TDi 8D2/0/H ; 8D5/0/H | D | 1896 | 1Z,AFF,AFN,AHH,AHU,AJM | M | - | TSW | 11/94 ▸ 12/98 | 8D0121251Q | **731537** | 632 414 | ALM |
| 1.9 TDi 8D2/0/H ; 8D5/0/H | D | 1896 | 1Z,AFN,AHU,AJM | A | +/- | TSW | 01/95 ▸ 12/98 | 8D0121251BC | **731755** | 630 412,3 | ALM |
| 2.5 TDi V6 24V 8D20 ; 8D50 | D | 2496 | AFB,AKN | M | +/- | TSW | 11/97 ▸ 12/98 | 8D0121251N | **731756** | 632 396 | ALM |
| 2.5 TDi V6 24V 8D20 | D | 2496 | AKN | M | - | TSW | 08/98 ▸ 12/98 | 8D0121251Q | **731537** | 632 414 | ALM |
| 2.5 TDi V6 24V 8D20 | D | 2496 | AKN | M | | TSW | 08/98 ▸ 12/98 | 8D0121251P | **732361** | 632 414,5 | ALM |
| 2.5 TDi V6 24V 8D20 ; 8D50 | D | 2496 | AFB,AKN | A | +/- | TSW | 11/97 ▸ 12/98 | 8D0121251BB | **731757** | 630 412 | ALM |
| 2.5 TDi V6 24V 8D50 | D | 2496 | AFB | A | +/- | TSW | 01/98 ▸ 12/98 | 8D0121251BC | **731755** | 630 412,3 | ALM |

## A4 (99>2001)

| | | | | | | | | | | | |
|---|---|---|---|---|---|---|---|---|---|---|---|
| 1.6 i 8D20 ; 8D50 | E | 1595 | AHL,ALZ,ANA,ARM | M | + | TSW | 01/99 ▸ 09/01 | 8D0121251P | **732361** | 632 414,5 | ALM |
| 1.6 i 8D20 ; 8D50 1-060 791, 1-068 790 ▸ | E | 1595 | AHL,ALZ,ANA,ARM | M | - | TSW | 01/99 ▸ 09/01 | 8D0121251BA | **732811** | 632 414,5 | ALM |
| 1.6 i 8D20 | E | 1595 | AHL,ANA | M | - | TSW | 01/99 ▸ 11/00 | 8D0121251M | **731755** | 630 412,3 | ALM |
| 1.6 i 8D20 | E | 1595 | ANA | M | | TSW | 07/99 ▸ 11/00 | 8D0121251BC | **731755** | 630 412,3 | ALM |
| 1.6 i 8D20 ; 8D50 | E | 1595 | AHL,ANA | A | +/- | TSW | 01/99 ▸ 11/00 | 8D0121251BC | **731755** | 630 412,3 | ALM |
| 1.6 i 8D20 | E | 1595 | AHL,ANA | A | - | TSW | 01/99 ▸ 11/00 | 8D0121251M | **731755** | 630 412,3 | ALM |
| 1.6 i 8D20 1-068 791 ▸ | E | 1595 | ARM | A | - | TSW | 09/00 ▸ 11/00 | 8D0121251BA | **732811** | 632 414,5 | ALM |
| 1.6 i 8D20 ; 8D50 ▸ 1-060 790, 1-068 790 | E | 1595 | AHL,ALZ,ANA,ARM | M | - | TSW | 01/99 ▸ 12/00 | 8D0121251Q | **731537** | 632 414 | ALM |
| 1.6 i 8D20 ; 8D50 ▸ 1-068 790, 8D-1-068 790 | E | 1595 | ANA,ARM | A | - | TSW | 07/99 ▸ 11/00 | 8D0121251Q | **731537** | 632 414 | ALM |
| 1.8 i 20V,1.8 i Turbo 20V 8D2/0/S/T ; 8D5/0/S | E | 1781 | ADR,AFY,AJL,ANB,APT,APU,ARG ARK,AWT | M | + | TSW | 01/99 ▸ 09/01 | 8D0121251P | **732361** | 632 414,5 | ALM |
| 1.8 i 20V,1.8 i Turbo 20V 8D20 ; 8D50 1-068 791, 1-068 790 ▸ | E | 1781 | AFY,AJL,ANB,APT,APU,ARG,AWT | M | - | TSW | 01/99 ▸ 09/01 | 8D0121251BA | **732811** | 632 414,5 | ALM |
| 1.8 i 20V 8D2/0/S/T | E | 1781 | ADR,APT,ARG | M | - | TSW | 02/99 ▸ 11/00 | 8D0121251M | **731755** | 630 412,3 | ALM |
| 1.8 i 20V,1.8 i Turbo 20V 8D2/0/S ; 8D5/0/S | E | 1781 | ADR,ANB,APT,APU,ARG | A | +/- | TSW | 01/99 ▸ 09/01 | 8D0121251BC | **731755** | 630 412,3 | ALM |
| 1.8 i 20V,1.8 i Turbo 20V 8D20 ; 8D50 1-068 790, 1-068 791 ▸ | E | 1781 | AFY,APT,APU,ARG | A | - | TSW | 01/99 ▸ 09/01 | 8D0121251BA | **732811** | 632 414,5 | ALM |
| 1.8 i 20V,1.8 i Turbo 20V 8D2/0/S ; 8D5/0/S ▸ 1-068 790, 1-060 790 | E | 1781 | ADR,AFY,ANB,APT,APU,ARG | A | - | TSW | 01/99 ▸ 11/00 | 8D0121251Q | **731537** | 632 414 | ALM |
| 1.8 i 20V,1.8 i Turbo 20V 8D2/0/S/T ; 8D5/0/S ▸ 1-068 790, 1-060 790 | E | 1781 | ADR,AFY,AJL,ANB,APT,APU,ARG ARK,AWT | M | - | TSW | 01/99 ▸ 09/00 | 8D0121251Q | **731537** | 632 414 | ALM |
| 2.4 i V6 30V 8D2/0/S ; 8D5/0/S | E | 2393 | AML,APS,APZ,ARJ | M | +/- | TSW | 02/99 ▸ 11/00 | 8D0121251N | **731756** | 632 396 | ALM |
| 2.4 i V6 30V 8D5/0/S | E | 2393 | APS,APZ,ARJ | M | | TSW | 02/99 ▸ 11/00 | 8D0121251L | **731757** | 630 412 | ALM |
| 2.4 i V6 30V 8D2/0/S ; 8D5/0/S | E | 2393 | AML,APS,APZ,ARJ | A | +/- | TSW | 02/99 ▸ 09/01 | 8D0121251BB | **731757** | 630 412 | ALM |
| 2.7 i V6 30V 8D20 | E | 2671 | AGB | M | +/- | TSW | 02/99 ▸ 10/00 | 8D0121251BB | **731757** | 630 412 | ALM |
| 2.8 i V6 30V 8D50 ; 8D2/0/S | E | 2771 | AMX,APR,AQD,ATX | M | +/- | TSW | 01/99 ▸ 11/00 | 8D0121251N | **731756** | 632 396 | ALM |
| 2.8 i V6 30V 8D50 | E | 2771 | APR,AQD,ATX | M | | TSW | 01/99 ▸ 11/00 | 8D0121251L | **731757** | 630 412 | ALM |
| 2.8 i V6 30V 8D50 ; 8D2/0/S | E | 2771 | AMX,APR,AQD,ATX | A | +/- | TSW | 01/99 ▸ 09/01 | 8D0121251BB | **731757** | 630 412 | ALM |
| 1.9 TDi 8D20 ; 8D50 | D | 1896 | AFN,AHH,AHU,AJM,ATJ,AVG | M | + | TSW | 01/99 ▸ 09/01 | 8D0121251P | **732361** | 632 414,5 | ALM |
| 1.9 TDi 8D20 | D | 1896 | AHU | M | - | TSW | 01/99 ▸ 11/00 | 8D0121251M | **731755** | 630 412,3 | ALM |
| 1.9 TDi 8D20 ; 8D50 1-068 790, 1-068 791 ▸ | D | 1896 | AFN,AHH,AHU,AJM,ATJ,AVG | M | - | TSW | 01/99 ▸ 09/01 | 8D0121251BA | **732811** | 632 414,5 | ALM |
| 1.9 TDi 8D20 ; 8D50 | D | 1896 | AFN,AHU,AJM | A | +/- | TSW | 01/99 ▸ 09/01 | 8D0121251BC | **731755** | 630 412,3 | ALM |
| 1.9 TDi 8D50 09/2000, 1-068 790 ▸ | D | 1896 | AHU,AJM | A | - | TSW | 02/99 ▸ 09/01 | 8D0121251BA | **732811** | 632 414,5 | ALM |
| 1.9 TDi 8D20 ; 8D50 ▸ 1-068 790, 1-060 790 | D | 1896 | AFN,AHH,AHU,AJM,ATJ,AVG | M | - | TSW | 01/99 ▸ 10/00 | 8D0121251Q | **731537** | 632 414 | ALM |
| 1.9 TDi 8D20 ; 8D50 ▸ 8D-1-068 790, 09/2000 | D | 1896 | AFN,AHU,AJM | A | - | TSW | 01/99 ▸ 09/01 | 8D0121251Q | **731537** | 632 414 | ALM |
| 2.5 TDi V6 24V 8D20 ; 8D50 | D | 2496 | AFB,AKN | M | +/- | TSW | 01/99 ▸ 11/00 | 8D0121251N | **731756** | 632 396 | ALM |
| 2.5 TDi V6 24V 8D20 ; 8D50 | D | 2496 | AKN | M | +/- | TSW | 01/99 ▸ 09/01 | 8D0121251BB | **731757** | 630 412 | ALM |

Radiator Radiateur Motorkühler Radiatore di raffreddamento Radiator Radyatör Radiador Радиатор vízhűtő Vodní chladič Radiator Ψυγείο



• **New** Nouveau **Nuevo** Novo **Nuovo** Nieuw **Neu** Nowość **Yeni** Новый Νέο **Nový**

# AUDI (.../...)

## A4 (99>2001) (.../...)

| | | | CC | | | AC | | | | Valeo | DIM. | TECH |
|---|---|---|---|---|---|---|---|---|---|---|---|---|
| 2.5 TDi V6 24V | 8D20 ; 8D50 | D | 2496 | AFB,AKN | A | +/- | TSW | 01/99 ▸ 09/01 | 8D0121251BB | **731757** | 630 412 | ALM |

## A4 (2000>2004)

| | | | CC | | | AC | | | | Valeo | DIM. | TECH |
|---|---|---|---|---|---|---|---|---|---|---|---|---|
| 1.6 i | 8E20 ; 8E50 | E | 1595 | ALZ | M | +/- | TSW | 12/00 ▸ 12/04 | 8E0121251A | **732963** | 632 414 | ALM |
| 1.6 i | 8E20 ; 8E50 | E | 1595 | ALZ | M | | | 12/00 ▸ 12/04 | 8E0121251 | **732839** | 632 414,5 | ALM |
| 1.8 i Turbo 20V | 8E50 ; 8E2/0/5 | E | 1781 | AMB,AVJ,BEX,BFB | M | +/- | TSW | 12/00 ▸ 12/04 | 8E0121251A | **732963** | 632 414 | ALM |
| 1.8 i Turbo 20V | 8E20 ; 8E50 | E | 1781 | AVJ,BFB | M | | TSW | 12/00 ▸ 12/04 | 8E0121251B | **734269** | 630 412,3 | ALM |
| 1.8 i Turbo 20V | 8E50 ; 8E2/0/5 | E | 1781 | AMB,AVJ,BEX,BFB | M | | | 09/01 ▸ | 8E0121251 | **732839** | 632 414,5 | ALM |
| 1.8 i Turbo 20V | 8E20 ; 8E50 | E | 1781 | AVJ,AMB,BFB | A | +/- | TSW | 04/01 ▸ 06/02 | 8E0121251L | **734269** | 630 412,3 | ALM |
| 1.8 i Turbo 20V | 8E2/0/5 ; 8E5/0/5 | E | 1781 | AMB,AVJ,BEX,BFB | A | +/- | TSW | 07/01 ▸ 12/04 | 8E0121251A | **732963** | 632 414 | ALM |
| 1.8 i Turbo 20V | 8E2/0/5 ; 8E5/0/5 | E | 1781 | AMB | A | | | 07/01 ▸ 12/04 | 8E0121251 | **732839** | 632 414,5 | ALM |
| 2.0 FSI,2.0 i 20V | 8E20 ; 8E50 | E | 1984 | ALT,AWA | M | + | | 12/00 ▸ | 8E0121251 | **732839** | 632 414,5 | ALM |
| 2.0 FSI,2.0 i 20V | 8E20 ; 8E50 | E | 1984 | ALT,AWA | M | + | TSW | 12/00 ▸ 12/04 | 8E0121251A | **732963** | 632 414 | ALM |
| 2.0 i 20V | 8E20 ; 8E50 | E | 1984 | ALT | M | | TSW | 12/00 ▸ 12/04 | 8E0121251B | **734269** | 630 412,3 | ALM |
| 2.0 i 20V | 8E20 ; 8E50 | E | 1984 | ALT,AWA | A | +/- | TSW | 12/00 ▸ | 8E0121251L | **734269** | 630 412,3 | ALM |
| 2.0 FSI,2.0 i 20V | 8E20 ; 8E50 | E | 1984 | ALT,AWA | A | | TSW | 12/00 ▸ 12/04 | 8E0121251A | **732963** | 632 414 | ALM |
| 2.4 i V6 30V | 8E20 ; 8E50 | E | 2393 | AMM,BDV | M | +/- | TSW | 09/01 ▸ 12/04 | 8E0121251G | **734418** | 630 408 | ALB |
| 2.4 i V6 30V | 8E20 ; 8E50 | E | 2393 | AMM,BDV | A | +/- | TSW | 09/01 ▸ 12/04 | 8E0121251P | **735093** | 630 400 | ALB |
| 3.0 i 30V,3.0 i V6 30V | 8E2/0/5 ; 8E5/0/5 | E | 2976 | ASN,BBJ | M | +/- | TSW | 12/00 ▸ 12/04 | 8E0121251C | **734419** | 630 445 | ALB |
| 3.0 i 30V,3.0 i V6 30V | 8E55 ; 8E2/0/5 | E | 2976 | ASN,AVK,BBJ | A | +/- | TSW | 12/00 ▸ 12/04 | 8E0121251C | **734419** | 630 445 | ALB |
| 3.0 i 30V,3.0 i V6 30V | 8E25 ; 8E55 | E | 2976 | ASN,AVK,BBJ | A | +/- | TSW | 09/01 ▸ | 8E0121251M | **734269** | 630 412,3 | ALM |
| 1.9 TDi | 8E20 ; 8E50 | D | 1896 | AVF,AWX,BKE | M | +/- | TSW | 12/00 ▸ 12/04 | 8E0121251A | **732963** | 632 414 | ALM |
| 1.9 TDi | 8E20 ; 8E50 | D | 1896 | AVF,AWX | M | | TSW | 12/00 ▸ 12/04 | 8E0121251B | **734269** | 630 412,3 | ALM |
| 1.9 TDi | 8E20 ; 8E50 | D | 1896 | AVF | A | + | TSW | 11/02 ▸ | 8E0121251L | **734269** | 630 412,3 | ALM |
| 1.9 TDi | 8E20 ; 8E50 | D | 1896 | AVF | A | | TSW | 11/02 ▸ 12/04 | 8E0121251A | **732963** | 632 414 | ALM |
| 1.9 TDi | 8E50 | D | 1896 | AVF | M | | | 09/01 ▸ | 8E0121251 | **732839** | 632 414,5 | ALM |
| 2.5 TDi 24V,2.5 TDi V6<br>2.5 TDi V6 24V | 8E20 ; 8E50 | D | 2496 | AYM,BAU,BDG,BCZ | M | +/- | TSW | 04/01 ▸ 12/04 | 8E0121251J | **734268** | 630 412 | ALM |
| 2.5 TDi 24V,2.5 TDi V6<br>2.5 TDi V6 24V | 8E20 ; 8E50 | D | 2496 | AYM,BAU,BCZ,BDG,BFC | M | +/- | TSW | 04/01 ▸ 12/04 | 8E0121251Q | **734270** | 630 412 | ALM |
| 2.5 TDi V6 24V | 8E20 ; 8E50 | D | 2496 | BDG | M | | TSW | 06/03 ▸ 12/04 | 8E0121251A | **732963** | 632 414 | ALM |
| 2.5 TDi V6,2.5 TDi V6 24V | 8E20 ; 8E50 | D | 2496 | AKE,AYM,BAU,BCZ,BDG,BFC | A | +/- | TSW | 04/01 ▸ 12/04 | 8E0121251Q | **734270** | 630 412 | ALM |
| 2.5 TDi V6,2.5 TDi V6 24V | 8E20 ; 8E50 | D | 2496 | AYM,BAU,BCZ,BDG,BFC | A | | TSW | 04/01 ▸ 12/04 | 8E0121251J | **734268** | 630 412 | ALM |

## A4 (2004>2008)

| | | | CC | | | AC | | | | Valeo | DIM. | TECH |
|---|---|---|---|---|---|---|---|---|---|---|---|---|
| 1.6 i | 8EC0 ; 8ED0 | E | 1595 | ALZ | M | +/- | TSW | 11/04 ▸ 06/08 | 8E0121251A | **732963** | 632 414 | ALM |
| 1.8 i Turbo 20V | 8EC0 ; 8ED0 | E | 1781 | BFB | M | +/- | TSW | 11/04 ▸ 06/08 | 8E0121251A | **732963** | 632 414 | ALM |
| 1.8 i Turbo 20V | 8EC0 ; 8ED0 | E | 1781 | BFB | A | +/- | TSW | 11/04 ▸ | 8E0121251L | **734269** | 630 412,3 | ALM |
| 1.8 i Turbo 20V | 8EC0 ; 8ED0 | E | 1781 | BFB | A | | TSW | 11/04 ▸ | 8E0121251L | **734269** | 630 412,3 | ALM |
| 2.0 i 20V | 8EC0 ; 8ED0 | E | 1984 | ALT | M | +/- | TSW | 11/04 ▸ 06/08 | 8E0121251A | **732963** | 632 414 | ALM |
| 2.0 TFSi 16V | 8EC0 ; 8ED0 | E | 1984 | BGB,BWE | M | + | TSW | 09/05 ▸ 06/08 | 8E0121251A | **732963** | 632 414 | ALM |
| 2.0 TFSi 16V | 8EC0 ; 8ED0 | E | 1984 | BGB,BPJ | M | | TSW | 11/04 ▸ 06/08 | 8E0121251A | **732963** | 632 414 | ALM |
| 2.0 i 20V | 8EC0 ; 8ED0 | E | 1984 | ALT | A | +/- | TSW | 11/04 ▸ | 8E0121251L | **734269** | 630 412,3 | ALM |
| 2.0 TFSi 16V | 8EC0 ; 8ED0 | E | 1984 | BGB | A | + | TSW | 11/04 ▸ 08/05 | 8E0121251L | **734269** | 630 412,3 | ALM |
| 2.0 i 20V | 8EC0 ; 8ED0 | E | 1984 | ALT | A | | TSW | 11/04 ▸ 06/08 | 8E0121251A | **732963** | 632 414 | ALM |
| 2.0 TFSi 16V,2.0 i 20V | 8EC0 ; 8ED0 | E | 1984 | ALT,BWE | A | | TSW | 09/05 ▸ | 8E0121251L | **734269** | 630 412,3 | ALM |
| 2.0 TFSi 16V | 8EC0 | E | 1996 | BUL | M | + | TSW | 11/04 ▸ 06/08 | 8E0121251A | **732963** | 632 414 | ALM |
| 2.0 TFSi 16V | 8ED0 | E | 1996 | BUL | M | | TSW | 02/06 ▸ 06/08 | 8E0121251A | **732963** | 632 414 | ALM |
| 3.0 i 30V | 8EC0 ; 8ED0 | E | 2976 | BBJ | M | +/- | TSW | 11/04 ▸ 05/06 | 8E0121251C | **734419** | 630 445 | ALB |
| 3.0 i 30V | 8EC0 ; 8ED0 | E | 2976 | BBJ | A | +/- | TSW | 11/04 ▸ | 8E0121251M | **734269** | 630 412,3 | ALM |
| 3.0 i 30V | 8EC0 ; 8ED0 | E | 2976 | BBJ | A | + | TSW | 11/04 ▸ | 8E0121251M | **734269** | 630 412,3 | ALM |
| 3.0 i 30V | 8EC0 ; 8ED0 | E | 2976 | BBJ | A | | TSW | 11/04 ▸ 05/06 | 8E0121251M | **734269** | 630 412,3 | ALM |
| 3.0 i 30V | 8EC0 ; 8ED0 | E | 2976 | BBJ | A | | TSW | 11/04 ▸ 05/06 | 8E0121251C | **734419** | 630 445 | ALB |
| 3.2 FSi V6 24V | 8EC0 ; 8ED0 | E | 3123 | AUK | M | +/- | TSW | 01/05 ▸ 06/08 | 8E0121251C | **734419** | 630 445 | ALB |
| 3.2 FSi V6 24V | 8EC0 ; 8ED0 | E | 3123 | AUK | A | +/- | TSW | 01/05 ▸ | 8E0121251M | **734269** | 630 412,3 | ALM |
| 3.2 FSi V6 24V | 8EC0 ; 8ED0 | E | 3123 | AUK | A | + | TSW | 01/05 ▸ | 8E0121251M | **734269** | 630 412,3 | ALM |
| 3.2 FSi V6 24V | 8EC0 ; 8ED0 | E | 3123 | AUK | A | | TSW | 01/05 ▸ 06/08 | 8E0121251M | **734269** | 630 412,3 | ALM |
| 1.9 TDi | 8EC0 ; 8ED0 | D | 1896 | BKE,BRB | M | +/- | TSW | 11/04 ▸ 06/08 | 8E0121251A | **732963** | 632 414 | ALM |
| 2.0 TDi,2.0 TDi 16V | 8EC0 ; 8ED0 | D | 1968 | BLB,BNA,BPW,BRD,BRE,BRF,BVA<br>BVF | M | +/- | TSW | 11/04 ▸ 06/08 | 8E0121251A | **732963** | 632 414 | ALM |
| 2.0 TDi 16V | 8EC0 ; 8ED0 | D | 1968 | BLB,BNA | A | +/- | TSW | 11/04 ▸ | 8E0121251L | **734269** | 630 412,3 | ALM |
| 2.0 TDi,2.0 TDi 16V | 8EC0 ; 8ED0 | D | 1968 | BPW,BRE,BRF | A | + | TSW | 11/04 ▸ | 8E0121251L | **734269** | 630 412,3 | ALM |
| 2.0 TDi,2.0 TDi 16V | 8EC0 ; 8ED0 | D | 1968 | BLB,BNA,BPW,BRE,BRF,BVG | A | | TSW | 10/05 ▸ 06/08 | 8E0121251L | **734269** | 630 412,3 | ALM |
| 2.0 TDi 16V | 8EC0 ; 8ED0 | D | 1968 | BRD | A | | TSW | 06/06 ▸ 06/08 | 8E0121251A | **732963** | 632 414 | ALM |
| 2.5 TDi V6 24V | 8EC0 ; 8ED0 | D | 2496 | BCZ,BDG | M | +/- | TSW | 11/04 ▸ 05/06 | 8E0121251J | **734268** | 630 412 | ALM |
| 2.5 TDi V6 24V | 8EC0 ; 8ED0 | D | 2496 | BCZ,BDG | M | | TSW | 11/04 ▸ 05/06 | 8E0121251Q | **734270** | 630 412 | ALM |
| 2.5 TDi V6 24V | 8EC0 ; 8ED0 | D | 2496 | BCZ,BDG | A | +/- | TSW | 11/04 ▸ 05/06 | 8E0121251Q | **734270** | 630 412 | ALM |
| 2.5 TDi V6 24V | 8EC0 ; 8ED0 | D | 2496 | BCZ,BDG | A | | TSW | 11/04 ▸ 05/06 | 8E0121251J | **734268** | 630 412 | ALM |
| 2.7 TDi V6 24V | 8EC0 | D | 2698 | BSG | A | + | TSW | 03/06 ▸ | 8E0121251L | **734269** | 630 412,3 | ALM |

# AUDI (.../...)

## A4 (2004>2008) (.../...)

| Type Ctr. | | CC | | AC | | | OE | Valeo | DIM. | TECH |
|---|---|---|---|---|---|---|---|---|---|---|
| 3.0 TDi V6 24V 8EC0 ; 8ED0 | D | 2967 | BKN | M | | TSW | 11/04 ▸ 05/06 | 8E0121251A | **732963** | 632 414 | ALM |

## A4 (2007>)

| | | | | | | | | | | | |
|---|---|---|---|---|---|---|---|---|---|---|---|
| 2.0 TFSi Flexible Fuel 16V 8K5 | F | 1984 | CFKA | A | +/- | | 05/09 ▸ | 8K0121251T | •**735472** | 721,5 476 | ALB |
| 1.8 TFSi 120 16V 8K2/0/B/C ; 8K5/0/B/C<br>1.8 TFSi 160 16V<br>1.8 TFSi 16V | E | 1798 | CABA,CABB,CDHA,CDHB | M | +/- | | 11/07 ▸ | 8K0121251R | •**735471** | 720 480 | ALM |
| 1.8 TFSi 120 16V 8K2/0/B/C ; 8K5/0/B/C<br>1.8 TFSi 160 16V | E | 1798 | CABB,CDHA,CDHB | A | +/- | | 11/07 ▸ | 8K0121251T | •**735472** | 721,5 476 | ALB |
| 1.8 TFSi 120 16V 8K20 ; 8K50<br>1.8 TFSi 160 16V | E | 1798 | CDHA,CDHB | A | +/- | | 06/08 ▸ | 8K0121251R | •**735471** | 720 480 | ALM |
| 2.0 TFSi 16V 8K2/0/B/C ; 8K5/0/B/C<br>2.0 TFSi 179 16V<br>2.0 TFSi 211 16V | E | 1984 | CDNB,CDNC | M | +/- | | 06/08 ▸ | 8K0121251R | •**735471** | 720 480 | ALM |
| 2.0 TFSi 16V 8K20 ; 8K50<br>2.0 TFSi 179 16V<br>2.0 TFSi 211 16V | E | 1984 | CDNB,CDNC | A | +/- | | 06/08 ▸ | 8K0121251K | •**735472** | 721,5 476 | ALB |
| 2.0 TFSi 179 16V 8K20 ; 8K50<br>2.0 TFSi 211 16V | E | 1984 | CDNB,CDNC | A | +/- | | 06/08 ▸ | 8K0121251R | •**735471** | 720 480 | ALM |
| 3.2 FSi V6 24V 8K2/0/B/C ; 8K5/0/B/C | E | 3197 | CALA | M | +/- | | 11/07 ▸ | 8K0121251H | •**735474** | 721,5 474 | ALB |
| 3.2 FSi V6 24V 8K2/0/B/C ; 8K5/0/B/C<br>3.2 FSi V6 265 24V | E | 3197 | CALA | A | +/- | | 11/07 ▸ | 8K0121251AA | •**735473** | 722 474 | ALB |
| 3.2 FSi V6 24V 8K50 | E | 3197 | CALA | A | +/- | TSW | 04/08 ▸ | 8E0121251Q | **734270** | 630 412 | ALM |
| 3.2 FSi V6 265 24V 8K20 ; 8K50 | E | 3197 | CALA | A | +/- | | 09/08 ▸ | 8K0121251H | •**735474** | 721,5 474 | ALB |
| 2.0 TDi 120 16V 8K2/0/B/C/D/E ; 8K5/0/B/C/E<br>2.0 TDi 136 16V<br>2.0 TDi 143 16V<br>2.0 TDi 163 16V<br>2.0 TDi 16V<br>2.0 TDi 170 16V<br>2.0 TDi e 136 16V | D | 1968 | CAGA/F,CAGB/F,CAGC/F,CAHA/F,CAHB/F | M | +/- | | 11/07 ▸ | 8K0121251R | •**735471** | 720 480 | ALM |
| 2.0 TDi 136 16V 8K2/0/B/C ; 8K5/0/B/C<br>2.0 TDi 143 16V<br>2.0 TDi 16V<br>2.0 TDi e 136 16V | D | 1968 | CAGA/F,CAGB/F,CMEA | A | +/- | | 11/07 ▸ | 8K0121251T | •**735472** | 721,5 476 | ALB |
| 2.0 TDi 16V,2.0 TDi e 136 16V | D | 1968 | CAGA/F,CAGB/F | A | +/- | | 04/08 ▸ | 8K0121251R | •**735471** | 720 480 | ALM |
| 2.7 TDi V6 190 24V 8K2/0/B/C ; 8K5/0/B/C | D | 2698 | CGKA/F | M | +/- | | 06/08 ▸ | 8K0121251H | •**735474** | 721,5 474 | ALB |
| 2.7 TDi V6 163 24V 8K2/0/B/C ; 8K5/0/B/C<br>2.7 TDi V6 190 24V | D | 2698 | CAMA,CAMB,CGKA/F,CGKB/F | A | +/- | | 11/07 ▸ | 8K0121251AA | •**735473** | 722 474 | ALB |
| 2.7 TDi V6 163 24V 8K20 ; 8K50<br>2.7 TDi V6 190 24V | D | 2698 | CAMA,CAMB,CGKA/F,CGKB/F | A | +/- | | 11/07 ▸ | 8K0121251H | •**735474** | 721,5 474 | ALB |
| 3.0 TDi V6 24V 8K2/0/B/C ; 8K5/0/B/C | D | 2967 | CAPA,CCWA/F | M | +/- | | 11/07 ▸ | 8K0121251H | •**735474** | 721,5 474 | ALB |
| 3.0 TDi V6 24V 8K2/0/B/C ; 8K5/0/B/C | D | 2967 | CAPA,CCLA/F,CCWA/F,CCWB/F | A | +/- | | 04/08 ▸ | 8K0121251AA | •**735473** | 722 474 | ALB |
| 3.0 TDi V6 24V 8K20 ; 8K50 | D | 2967 | CAPA,CCWA/F,CCWB/F | A | +/- | | 04/08 ▸ | 8K0121251H | •**735474** | 721,5 474 | ALB |

## A4 CABRIOLET (2002>2005)

| | | | | | | | | | | | |
|---|---|---|---|---|---|---|---|---|---|---|---|
| 1.8 i Turbo 20V 8H70 | E | 1781 | BFB | M | +/- | TSW | 07/02 ▸ 2004 | 8E0121251A | **732963** | 632 414 | ALM |
| 1.8 i Turbo 20V 8H70 | E | 1781 | BFB | M | | | 07/02 ▸ 05/03 | 8E0121251 | **732839** | 632 414,5 | ALM |
| 1.8 i Turbo 20V 8H70 | E | 1781 | BFB | A | + | TSW | 07/02 ▸ | 8E0121251L | **734269** | 630 412,3 | ALM |
| 1.8 i Turbo 20V 8H70 | E | 1781 | BFB | A | | TSW | 07/02 ▸ 12/05 | 8E0121251A | **732963** | 632 414 | ALM |
| 2.0 i 20V 8H70 | E | 1984 | ALT | M | +/- | TSW | 11/04 ▸ 2004 | 8E0121251A | **732963** | 632 414 | ALM |
| 2.4 i V6 30V 8H70 | E | 2393 | AMM,BDV | M | +/- | TSW | 04/02 ▸ 12/05 | 8E0121251G | **734418** | 630 408 | ALB |
| 2.4 i V6 30V 8H70 | E | 2393 | AMM | M | | TSW | 06/03 ▸ 12/05 | 8E0121251P | **735093** | 630 400 | ALB |
| 2.4 i V6 30V 8H70 | E | 2393 | AMM,BDV | A | +/- | TSW | 04/02 ▸ 12/05 | 8E0121251P | **735093** | 630 400 | ALB |
| 3.0 i V6 30V 8H70 | E | 2976 | ASN,BBJ | M | +/- | TSW | 04/02 ▸ 12/05 | 8E0121251C | **734419** | 630 445 | ALB |
| 3.0 i V6 30V 8H70 | E | 2976 | ASN | M | | TSW | 06/03 ▸ 12/05 | 8E0121251M | **734269** | 630 412,3 | ALM |
| 3.0 i V6 30V 8H70 | E | 2976 | ASN,BBJ | A | +/- | TSW | 04/02 ▸ 12/05 | 8E0121251M | **734269** | 630 412,3 | ALM |
| 2.5 TDI V6 24V 8H70 | D | 2496 | BCZ,BDG,BFC | M | +/- | TSW | 08/02 ▸ 12/05 | 8E0121251J | **734268** | 630 412 | ALM |
| 2.5 TDI V6 24V 8H70 | D | 2496 | BCZ,BDG,BFC | A | +/- | TSW | 06/03 ▸ 12/05 | 8E0121251Q | **734270** | 630 412 | ALM |
| 2.5 TDI V6 24V 8H70 | D | 2496 | BCZ,BDG | A | | TSW | 06/03 ▸ 12/05 | 8E0121251J | **734268** | 630 412 | ALM |

## A4 CABRIOLET II (2006>2009)

| | | | | | | | | | | | |
|---|---|---|---|---|---|---|---|---|---|---|---|
| 1.8 i Turbo 20V 8HE0 | E | 1781 | BFB | M | +/- | TSW | 01/06 ▸ 03/09 | 8E0121251A | **732963** | 632 414 | ALM |
| 1.8 i Turbo 20V 8HE0 | E | 1781 | BFB | A | +/- | TSW | 01/06 ▸ | 8E0121251L | **734269** | 630 412,3 | ALM |
| 2.0 TFSi 16V 8HE0 | E | 1984 | BWE | M | +/- | TSW | 06/06 ▸ 03/09 | 8E0121251A | **732963** | 632 414 | ALM |
| 2.0 TFSi 16V 8HE0 | E | 1984 | BWE | M | | TSW | 06/06 ▸ 03/09 | 8E0121251L | **734269** | 630 412,3 | ALM |

Radiator Radiateur Motorkühler Radiatore di raffreddamento Radiator Radyatör Radiator Radiador Радиатор vízhűtő Vodní chladič Radiator Ψυγείο



• **New** Nouveau **Nuevo** Novo **Nuovo** Nieuw **Neu** Nowość **Yeni** Новый Νέο **Nový**

## A4 CABRIOLET II (2006>2009) (.../...)

| | | | CC | | | AC | | | | Valeo | DIM. | | TECH |
|---|---|---|---|---|---|---|---|---|---|---|---|---|---|
| 2.0 TFSi 16V | 8HE0 | E | 1984 | BWE | A | +/- | TSW | 01/06 ▸ 03/09 | 8E0121251A | 732963 | 632 | 414 | ALM |
| 2.0 TFSi 16V | 8HE0 | E | 1984 | BWE | A | | TSW | 01/06 ▸ 03/09 | 8E0121251L | 734269 | 630 | 412,3 | ALM |
| 3.2 FSi V6 24V | 8HE0 | E | 3123 | AUK | M | | TSW | 01/06 ▸ 03/09 | 8E0121251C | 734419 | 630 | 445 | ALB |
| 3.2 FSi V6 24V | 8HE0 | E | 3123 | AUK | A | +/- | TSW | 01/06 ▸ | 8E0121251M | 734269 | 630 | 412,3 | ALM |
| 2.0 TDi | 8HE0 | D | 1968 | BPW,BRC | M | +/- | TSW | 01/06 ▸ 03/09 | 8E0121251A | 732963 | 632 | 414 | ALM |
| 2.0 TDi | 8HE0 | D | 1968 | BPW,BRC | A | +/- | TSW | 01/06 ▸ | 8E0121251L | 734269 | 630 | 412,3 | ALM |

## A4 ALLROAD QUATTRO (2009>)

| | | | | | | | | | | | | | |
|---|---|---|---|---|---|---|---|---|---|---|---|---|---|
| 2.0TFSi 16V | 8KH0 | E | 1984 | CDNC | A | | | 05/09 ▸ | 8K0121251K | •735472 | 721,5 | 476 | ALB |
| 2.0TDi | 8KH0 | D | 1968 | CAGA/F,CAGB/F,CAHA/F,CAHB/F | M | +/- | | 04/09 ▸ | 8K0121251R | •735471 | 720 | 480 | ALM |
| 3.0TDi | 8KH0 | D | 2967 | CCWA/F | M | +/- | | 04/09 ▸ | 8K0121251H | •735474 | 721,5 | 474 | ALB |
| 3.0TDi | 8KH0 | D | 2967 | CCWA/F | A | +/- | | 04/09 ▸ | 8K0121251AA | •735473 | 722 | 474 | ALB |

## A5

| | | | | | | | | | | | | | |
|---|---|---|---|---|---|---|---|---|---|---|---|---|---|
| 1.8 TFSi 16V | 8T30 | E | 1798 | CABD | M | +/- | | 10/07 ▸ | 8K0121251R | •735471 | 720 | 480 | ALM |
| 1.8 TFSI 16V | 8T30 ; 8TA0 | E | 1798 | CABD,CDHB | A | +/- | TSW | 01/08 ▸ | 8K0121251K | •735472 | 721,5 | 476 | ALB |
| 1.8 TFSI 16V | 8T30 ; 8TA0 | E | 1798 | CABD,CDHB | A | +/- | TSW | 01/08 ▸ | 8K0121251T | •735472 | 721,5 | 476 | ALB |
| 1.8 TFSi 16V | 8T30 | E | 1798 | CABD | A | +/- | | 01/08 ▸ | 8K0121251R | •735471 | 720 | 480 | ALM |
| 2.0 TFSI 16V | 8T30 | E | 1984 | CDNB,CDNC | M | +/- | | 06/08 ▸ | 8K0121251R | •735471 | 720 | 480 | ALM |
| 2.0 TFSi 16V | 8T30 ; 8TA0 | E | 1984 | CDNB,CDNC | A | +/- | TSW | 06/08 ▸ | 8K0121251T | •735472 | 721,5 | 476 | ALB |
| 2.0 TFSi 16V | 8T30 | E | 1984 | CDNC | A | +/- | | 06/08 ▸ | 8K0121251R | •735471 | 720 | 480 | ALM |
| 3.2 FSi V6 24V | 8T30 | E | 3197 | CALA | M | +/- | | 06/07 ▸ | 8K0121251H | •735474 | 721,5 | 474 | ALB |
| 3.2 FSi V6 24V | 8T30 ; 8TA0 | E | 3197 | CALA | A | +/- | | 06/07 ▸ | 8K0121251AA | •735473 | 722 | 474 | ALB |
| 2.0 TDi 16V | 8T30 | D | 1968 | CAHA/F,CAHB/F | M | +/- | | 01/08 ▸ | 8K0121251R | •735471 | 720 | 480 | ALM |
| 2.0 TDi 16V | 8TA0 | D | 1968 | CAGA/F,CMEA | A | +/- | TSW | 09/09 ▸ | 8K0121251T | •735472 | 721,5 | 476 | ALB |
| 2.7 TDi V6 24V | 8T30 ; 8TA0 | D | 2698 | CGKA/F | M | +/- | | 06/08 ▸ | 8K0121251H | •735474 | 721,5 | 474 | ALB |
| 2.7 TDi V6 24V | 8T30 ; 8TA0 | D | 2698 | CAMA,CGKA/F,CGKB/F | A | +/- | | 07/07 ▸ | 8K0121251AA | •735473 | 722 | 474 | ALB |
| 3.0 TDi V6 24V | 8T30 ; 8TA0 | D | 2967 | CAPA,CCWA/F | M | +/- | | 06/07 ▸ | 8K0121251H | •735474 | 721,5 | 474 | ALB |
| 3.0 TDi V6 24V | 8T30 ; 8TA0 | D | 2967 | CCWA/F,CCWB/F | A | +/- | | 03/08 ▸ | 8K0121251AA | •735473 | 722 | 474 | ALB |

## A5 CABRIOLET (2009>)

| | | | | | | | | | | | | | |
|---|---|---|---|---|---|---|---|---|---|---|---|---|---|
| 1.8 TFSI | 8F70 | E | 1798 | CDHB | M | +/- | | 09/09 ▸ | 8K0121251R | •735471 | 720 | 480 | ALM |
| 1.8 TFSI | 8F70 | E | 1798 | CDHB | A | +/- | TSW | 09/09 ▸ | 8K0121251T | •735472 | 721,5 | 476 | ALB |
| 2.0 TFSI | 8F70 | E | 1984 | CDNC | M | +/- | | 03/09 ▸ | 8K0121251R | •735471 | 720 | 480 | ALM |
| 2.0 TFSI | 8F7/0/5 | E | 1984 | CAEB,CDNB,CDNC | A | +/- | TSW | 03/09 ▸ | 8K0121251T | •735472 | 721,5 | 476 | ALB |
| 3.2 FSI | 8F7/0/5 | E | 3197 | CALA | A | +/- | TSW | 03/09 ▸ | 8K0121251AA | •735473 | 722 | 474 | ALB |
| 2.0 TDI | 8F70 | D | 1968 | CAHA/F,CAHB/F | M | +/- | | 05/09 ▸ | 8K0121251R | •735471 | 720 | 480 | ALM |
| 2.7 TDI | 8F70 | D | 2698 | CGKA/F | M | +/- | | 03/09 ▸ | 8K0121251H | •735474 | 721,5 | 474 | ALB |
| 2.7 TDI | 8F70 | D | 2698 | CGKA/F,CGKB/F | A | +/- | TSW | 05/09 ▸ | 8K0121251AA | •735473 | 722 | 474 | ALB |
| 3.0 TDI | 8F70 | D | 2967 | CCWA/F | A | +/- | TSW | 03/09 ▸ | 8K0121251AA | •735473 | 722 | 474 | ALB |

## S5 CABRIOLET (2009>)

| | | | | | | | | | | | | | |
|---|---|---|---|---|---|---|---|---|---|---|---|---|---|
| 3.0 TFSI | 8F7S | E | 2995 | CAKA | A | +/- | | 06/09 ▸ | 8K0121251AA | •735473 | 722 | 474 | ALB |
| 3.0 TFSI | 8F7S | E | 2995 | CAKA | A | +/- | | 06/09 ▸ | 8K0121251H | •735474 | 721,5 | 474 | ALB |

## A6 (94>97)

| | | | | | | | | | | | | | |
|---|---|---|---|---|---|---|---|---|---|---|---|---|---|
| 1.8 E 20V,1.8 i 20V | 4A2/0/H ; 4A5/0/H | E | 1781 | ADR | M | +/- | TSW | 07/95 ▸ 09/97 | 4A0121251D | 730361 | 632 | 414 | ALM |
| 1.8 E 20V | 4A2/0/H ; 4A5/0/H | E | 1781 | ADR | A | +/- | | 07/95 ▸ 09/97 | 4A0121251C | | 632 | 412 | ALM |
| 2.0 E,2.0 E 16V,2.0 i<br>2.0 i 16V | 4A20 ; 4A50 | E | 1984 | AAE,ABK,ACE,ADW | M | +/- | TSW | 07/94 ▸ 09/97 | 4A0121251D | 730361 | 632 | 414 | ALM |
| 2.0 E | 4A20 ; 4A50 | E | 1984 | ABK,ADW | A | +/- | | 07/94 ▸ 09/97 | 4A0121251C | | 632 | 412 | ALM |
| 2.3 E,2.3 i | 4A20 ; 4A50 | E | 2309 | AAR | M | +/- | TSW | 07/94 ▸ 09/97 | 4A0121251D | 730361 | 632 | 414 | ALM |
| 2.3 i | 4A20 ; 4A50 | E | 2309 | AAR | M | | TSW | 08/94 ▸ 09/97 | 4A0121251A | 730361 | 632 | 414 | ALM |
| 2.4 i V6 | 4A20 | E | 2393 | AFM | A | +/- | | 07/95 ▸ 03/97 | 4A0121251C | | 632 | 412 | ALM |
| 2.4 i V6 | 4A50 | E | 2393 | AFM | A | +/- | | 07/96 ▸ 09/97 | 4A0121251R | | 632 | 407 | CBS |
| 2.6 E V6 | 4A20 ; 4A50 | E | 2598 | ABC,ACZ | M | + | TSW 819769 | 07/94 ▸ 09/97 | 4A0121251Q | 734751 | 632 | 412 | ALM |
| 2.6 E V6 | 4A20 ; 4A50 | E | 2598 | ABC,ACZ | M | - | TSW 819769 | 07/94 ▸ 09/97 | 4A0121251K | 730363 | 632 | 414 | ALM |
| 2.6 E V6 | 4A20 ; 4A50 | E | 2598 | ABC,ACZ | A | +/- | | 06/94 ▸ 09/97 | 4A0121251R | | 632 | 407 | CBS |
| 2.6 E V6 | 4A20 ; 4A50 | E | 2598 | ABC,ACZ | A | +/- | | 07/94 ▸ 09/97 | 4A0121251M | | 632 | 407 | CBS |
| 2.8 E V6,2.8 i V6 | 4A20 ; 4A50 | E | 2771 | AAH,AEJ | M | + | TSW 819769 | 07/94 ▸ 09/97 | 4A0121251Q | 734751 | 632 | 412 | ALM |
| 2.8 E V6,2.8 i V6 | 4A20 ; 4A50 | E | 2771 | AAH,AEJ | M | - | TSW 819769 | 07/94 ▸ 09/97 | 4A0121251K | 730363 | 632 | 414 | ALM |
| 2.8 E V6 30V | 4A50 | E | 2771 | ACK | M | | TSW | 10/95 ▸ 09/97 | 4A0121251D | 730361 | 632 | 414 | ALM |
| 2.8 E V6,2.8 E V6 30V<br>2.8 i V6 | 4A20 ; 4A50 | E | 2771 | AAH,ACK,AEJ | A | +/- | | 06/94 ▸ 09/97 | 4A0121251R | | 632 | 407 | CBS |
| 2.8 E V6 | 4A50 | E | 2771 | AEJ,ACK | A | + | TSW 819769 | 07/95 ▸ 09/97 | 4A0121251Q | 734751 | 632 | 412 | ALM |
| 2.8 E V6 | 4A50 | E | 2771 | AEJ | A | - | TSW 819769 | 07/95 ▸ 09/97 | 4A0121251K | 730363 | 632 | 414 | ALM |
| 2.8 E V6,2.8 E V6 30V<br>2.8 i V6 | 4A20 ; 4A50 | E | 2771 | AAH,ACK,AEJ | A | | | 07/94 ▸ 09/97 | 4A0121251M | | 632 | 407 | CBS |
| 1.9 TDi | 4A20 ; 4A50 | D | 1896 | 1Z,AHU | M | +/- | TSW | 07/94 ▸ 09/97 | 4A0121251D | 730361 | 632 | 414 | ALM |
| 1.9 TDi | 4A20 ; 4A50 | D | 1896 | 1Z,AHU | A | +/- | | 07/94 ▸ 09/97 | 4A0121251C | | 632 | 412 | ALM |

# AUDI (.../...)

## A6 (94>97) (.../...)

| Type Ctr. | | CC | | AC | | | OE | Valeo | DIM. | TECH |
|---|---|---|---|---|---|---|---|---|---|---|
| 2.5 TDi 4A50 ; 4A2/0/H | D | 2460 | AAT,AEL | M | +/- | TSW | 07/94 ▸ 09/97 | 4A0121251D | **730361** | 632 414 | ALM |
| 2.5 TDi 4A2/0/H | D | 2460 | AEL | M | + | TSW 819769 | 07/95 ▸ 03/97 | 4A0121251Q | **734751** | 632 412 | ALM |
| 2.5 TDi 4A50 ; 4A2/0/H | D | 2460 | AAT,AEL | A | +/- | | 07/94 ▸ 09/97 | 4A0121251C | | 632 412 | ALM |
| 2.5 TDi 4A50 | D | 2460 | AEL | A | +/- | TSW | 07/94 ▸ 09/97 | 4A0121251D | **730361** | 632 414 | ALM |

## A6 (97>2001)

| | | | | | | | | | | | |
|---|---|---|---|---|---|---|---|---|---|---|---|
| 1.8 i Turbo 20V 4B5H | E | 1781 | AEB | M | +/- | TSW | 02/98 ▸ 07/98 | 8D0121251M | **731755** | 630 412,3 | ALM |
| 1.8 i 20V,1.8 i Turbo 20V 4B2/0/H ; 4B5/0/H | E | 1781 | AEB,AFY,AJL,AJP,ANB,APU,AQE ARK | M | + | TSW | 04/97 ▸ 05/01 | 8D0121251P | **732361** | 632 414,5 | ALM |
| 1.8 i 20V,1.8 i Turbo 20V 4B2/0/H ; 4B5/0/H | E | 1781 | AEB,AFY,AJL,AJP,ANB,APU,AQE ARH,ARK,AWT | M | - | TSW | 04/97 ▸ 05/01 | 8D0121251Q | **731537** | 632 414 | ALM |
| 1.8 i Turbo 20V 4B20 ; 4B50 | E | 1781 | AWT | M | - | TSW | 05/00 ▸ 05/01 | 8D0121251BA | **732811** | 632 414,5 | ALM |
| 1.8 i 20V,1.8 i Turbo 20V 4B2/0/H ; 4B5/0/H | E | 1781 | AEB,AFY,AJP,ANB,APU,AQE,ARH ARK,AWT | A | +/- | TSW | 04/97 ▸ 05/01 | 8D0121251BC | **731755** | 630 412,3 | ALM |
| 2.4 i V6,2.4 i V6 30V 4B2/0/H ; 4B5/0/H | E | 2393 | AGA,AJG,ALF,ALW,AML,AMM,APC APS,APZ,ARJ,ARN,ASM | M | +/- | TSW | 04/97 ▸ 05/01 | 8D0121251N | **731756** | 632 396 | ALM |
| 2.4 i V6,2.4 i V6 30V 4B2/0/H ; 4B5/0/H | E | 2393 | AGA,AJG,ALF,AML,AMM,APC,APS APZ,ARJ | A | +/- | TSW | 04/97 ▸ 05/01 | 8D0121251BB | **731757** | 630 412 | ALM |
| 2.7 i V6 Bi Turbo 4B2/0/H ; 4B5/0/H | E | 2671 | AJK,AZA | M | +/- | TSW | 01/98 ▸ 05/01 | 4B0121251K | **731756** | 632 396 | ALM |
| 2.7 i V6 Bi turbo 4B20 | E | 2671 | AJK | A | | TSW | 02/99 ▸ 05/01 | 8D0121251L | **731757** | 630 412 | ALM |
| 2.8 i V6 30V 4B2/0/H ; 4B5/0/H | E | 2771 | ACK,AGE,ALG,AMX,APR,AQD,ATX | M | +/- | TSW | 04/97 ▸ 05/01 | 8D0121251N | **731756** | 632 396 | ALM |
| 2.8 i V6 30V 4B2/0/H ; 4B5/0/H | E | 2771 | ACK,AGE,ALG,AMX,APR,AQD,ATX | A | +/- | TSW | 04/97 ▸ 05/01 | 8D0121251L | **731757** | 630 412 | ALM |
| 4.2 i V8 40V 4B40 ; 4B60 | E | 4172 | ARS,ASG | A | +/- | TSW | 04/99 ▸ 05/01 | 4B3121251D | **734859** | 682 440 | ALB |
| 4.2 i V8 40V 4B60 | E | 4172 | ARS | A | | TSW | 04/99 ▸ 05/01 | 8D0121251M | **731755** | 630 412,3 | ALM |
| 1.9 TDi 4B20 | D | 1896 | AFN,AJM,AVG | M | +/- | TSW | 08/99 ▸ 05/01 | 8D0121251P | **732361** | 632 414,5 | ALM |
| 1.9 TDi 4B2/0/H ; 4B5/0/H | D | 1896 | AFN,AJM | M | - | TSW | 04/97 ▸ 05/01 | 8D0121251Q | **731537** | 632 414 | ALM |
| 1.9 TDi 4B2/0/H ; 4B5/0/H | D | 1896 | AFN,AJM,AVG | A | +/- | TSW | 04/97 ▸ 05/01 | 8D0121251BC | **731755** | 630 412,3 | ALM |
| 2.5 TDi V6 24V 4B2/0/H ; 4B5/0/H | D | 2496 | AFB,AKN | M | +/- | TSW | 04/97 ▸ 05/01 | 8D0121251BC | **731755** | 630 412,3 | ALM |
| 2.5 TDi V6 24V 4B2/0/H ; 4B5/0/H | D | 2496 | AFB,AKN | M | +/- | TSW 820305 | 04/97 ▸ 05/01 | 4B0121251 | **734752** | 632 449 | ALB |
| 2.5 TDi V6 24V 4B20 ; 4B50 | D | 2496 | AFB | M | | TSW | 07/97 ▸ 07/98 | 4B0121251A | **734753** | 632 449 | ALB |
| 2.5 TDi V6 24V 4B20 ; 4B50 | D | 2496 | AKE | M | | TSW | 11/99 ▸ 05/01 | 4B0121251N | **734753** | 632 449 | ALB |
| 2.5 TDi V6 24V 4B20 ; 4B50 | D | 2496 | AFB,AKE,AKN | A | +/- | TSW | 02/99 ▸ 06/99 | 4B0121251A | **734753** | 632 449 | ALB |

## A6 (2001>2004)

| | | | | | | | | | | | |
|---|---|---|---|---|---|---|---|---|---|---|---|
| 1.8 i Turbo 20V 4B20 ; 4B50 | E | 1781 | AWT | M | +/- | TSW | 06/01 ▸ 04/05 | 8D0121251P | **732361** | 632 414,5 | ALM |
| 1.8 i Turbo 20V 4B20 ; 4B50 | E | 1781 | AWT | A | +/- | TSW | 06/01 ▸ 04/05 | 8D0121251BE | **731755** | 630 412,3 | ALM |
| 2.0 i 20V 4B20 ; 4B50 | E | 1984 | ALT | M | +/- | TSW | 06/01 ▸ 04/05 | 8E0121251A | **732963** | 632 414 | ALM |
| 2.0 i 20V 4B50 | E | 1984 | ALT | M | | TSW | 06/01 ▸ 04/05 | 8E0121251L | **734269** | 630 412,3 | ALM |
| 2.0 i 20V 4B20 ; 4B50 | E | 1984 | ALT | A | +/- | TSW | 06/01 ▸ 04/05 | 8E0121251L | **734269** | 630 412,3 | ALM |
| 2.4 i V6 30V 4B20 ; 4B50 | E | 2393 | AMM,ASM,BDV | M | +/- | TSW | 06/01 ▸ 04/05 | 8D0121251N | **731756** | 632 396 | ALM |
| 2.4 i V6 30V 4B20 ; 4B50 | E | 2393 | AMM,BDV | A | +/- | TSW | 06/01 ▸ 04/05 | 4B0121251R | **731757** | 630 412 | ALM |
| 2.7 i V6 Bi Turbo 4B20 ; 4B50 | E | 2671 | ARE,BES | M | +/- | TSW | 06/01 ▸ 05/04 | 4Z7121251B | **731757** | 630 412 | ALM |
| 2.7 i V6 Bi Turbo 4B20 ; 4B50 | E | 2671 | BES | M | | TSW | 06/01 ▸ 05/04 | 4B0121251AK | **734753** | 632 449 | ALB |
| 2.7 i V6 Bi Turbo 4B20 ; 4B50 | E | 2671 | ARE,BES | A | +/- | TSW | 06/01 ▸ 04/05 | 4Z7121251B | **731757** | 630 412 | ALM |
| 2.7 i V6 Bi Turbo 4B20 ; 4B50 | E | 2671 | BES | A | | TSW | 07/02 ▸ 04/05 | 4B0121251AK | **734753** | 632 449 | ALB |
| 3.0 i V6 30V 4B20 ; 4B50 | E | 2976 | ASN,BBJ | M | +/- | TSW | 06/01 ▸ 04/05 | 8E0121251C | **734419** | 630 445 | ALB |
| 3.0 i V6 30V 4B20 ; 4B50 | E | 2976 | ASN,BBJ | A | +/- | TSW | 06/01 ▸ 04/05 | 8E0121251M | **734269** | 630 412,3 | ALM |
| 4.2 i V8 40V 4B40 ; 4B60 | E | 4172 | ASG | A | +/- | TSW | 06/01 ▸ 04/05 | 4B3121251D | **734859** | 682 440 | ALB |
| 1.9 TDi 4B20 ; 4B50 | D | 1896 | AVF,AWX | M | +/- | TSW | 06/01 ▸ 01/05 | 8D0121251P | **732361** | 632 414,5 | ALM |
| 1.9 TDi 4B20 ; 4B50 | D | 1896 | AVF,AWX | A | +/- | TSW | 06/01 ▸ 01/05 | 8D0121251BE | **731755** | 630 412,3 | ALM |
| 2.5 TDi V6,2.5 TDi V6 24V 4B20 ; 4B50 | D | 2496 | AYM,BCZ,BDG,BFC | M | +/- | TSW 820305 | 06/01 ▸ 01/05 | 4B0121251 | **734752** | 632 449 | ALB |
| 2.5 TDi V6 24V 4B20 ; 4B50 | D | 2496 | AKE,BAU,BDH | M | +/- | TSW | 06/01 ▸ 04/05 | 4B0121251AK | **734753** | 632 449 | ALB |
| 2.5 TDi V6,2.5 TDi V6 24V 4B20 ; 4B50 | D | 2496 | AKE,AYM,BAU,BDH,BFC | A | +/- | TSW | 06/01 ▸ 04/05 | 4B0121251AK | **734753** | 632 449 | ALB |

## A6 ALLROAD (2000>2005)

| | | | | | | | | | | | |
|---|---|---|---|---|---|---|---|---|---|---|---|
| 2.7 i V6 Turbo 4BH0 | E | 2671 | ARE,BES | M | +/- | TSW | 05/00 ▸ 08/05 | 4Z7121251B | **731757** | 630 412 | ALM |
| 2.7 i V6 Turbo 4BH0 | E | 2671 | ARE,BES | A | +/- | TSW | 05/00 ▸ 08/05 | 4Z7121251B | **731757** | 630 412 | ALM |
| 2.5 TDi V6 24V 4BH0 | D | 2496 | AKE | M | + | TSW | 05/00 ▸ 07/01 | 4Z7121251 | **731757** | 630 412 | ALM |
| 2.5 TDi V6 24V 4BH0 | D | 2496 | AKE | A | + | TSW | 05/00 ▸ 07/01 | 4Z7121251 | **731757** | 630 412 | ALM |

## A7

| | | | | | | | | | | | |
|---|---|---|---|---|---|---|---|---|---|---|---|
| 2.8 TFSI 204 24V 4GA0 | E | 2773 | CHVA | A | +/- | | 10/10 ▸ | 8K0121251H | •**735474** | 721,5 474 | ALB |
| 3.0 TFSI 300 24V 4GA0 | E | 2995 | CGWB | A | +/- | | 07/10 ▸ | 8K0121251H | •**735474** | 721,5 474 | ALB |
| 3.0 TDI 204 24V 4GA0<br>3.0 TDI 245 24V | D | 2967 | CDUC,CLAB/F | A | +/- | | 07/10 ▸ | 8K0121251H | •**735474** | 721,5 474 | ALB |

## A8 (94>2002)

| | | | | | | | | | | | |
|---|---|---|---|---|---|---|---|---|---|---|---|
| 2.8 E V6,2.8 E V6 30V 4D2G<br>2.8 i V6 | E | 2771 | AAH,ACK,AEJ,ALG,AMX,APR,AQD | M | +/- | | 06/94 ▸ 09/02 | 4D0121251D | | 630 400 | ALB |

S-004 301 ▸

Radiator Radiateur Motorkühler Radiatore di raffreddamento Radiator Radyatör Radiador Радиатор vízhűtő Vodní chladič Radiator Ψυγείο



• **New** Nouveau **Nuevo** Novo **Nuovo** Nieuw **Neu** Nowość **Yeni** Новый Νέο **Nový**

| Type Ctr. | | CC | | AC | | | OE | Valeo | DIM. | TECH |
|---|---|---|---|---|---|---|---|---|---|---|
| **A8 (94>2002) (.../...)** | | | | | | | | | | |
| 2.8 E V6,2.8 E V6 30V<br>2.8 i V6<br>2-000 901, 4D-S-004 301 ▸ 4D2G | E | 2771 | AAH,ACK,AEJ,ALG,AMX,APR,AQD | A | +/- | | 06/94 ▸ 09/02 | 4D0121251AP | | 630 397 | ALB |
| 2.8 E V6,2.8 E V6 30V<br>2.8 i V6<br>S004301, S-000 001 ▸ 4D2G | E | 2771 | AAH,ACK,AEJ,ALG,AMX,APR,AQD | A | | | 06/94 ▸ 07/01 | 4D0121251C | | 630 397 | ALB |
| 2.8 i V6<br>▸ R-002 000 4D2G | E | 2771 | AAH | A | +/- | | 06/94 ▸ 07/94 | 4D0121251F | | 630 397 | ALB |
| 2.8 i V6<br>▸ R002000 4D2G | E | 2771 | AAH | A | | TSW | 06/94 ▸ 07/94 | 4D0121251 | **734695** | 720 440 | ALB |
| 2.8 i V6<br>▸ S-004 300 4D2G | E | 2771 | AAH | M | | | 06/94 ▸ 01/95 | 4D0121251E | | 630 400 | ALB |
| 3.7 i V8 32V 4D2G | E | 3697 | AEW,AKJ | A | +/- | | 07/95 ▸ 12/98 | 4D0121251F | | 630 397 | ALB |
| 4.2 i V8 32V<br>S-000 001 ▸ 4D2G | E | 4172 | ABZ,AEM,AGH,AKG | A | +/- | | 06/94 ▸ 12/98 | 4D0121251F | | 630 397 | ALB |
| 4.2 i V8 32V<br>▸ R-002 000 4D2G | E | 4172 | ABZ,AEM | A | | TSW | 06/94 ▸ 07/94 | 4D0121251 | **734695** | 720 440 | ALB |
| 2.5 TDi V6 24V 4D2G | D | 2496 | AKN | M | +/- | TSW | 10/98 ▸ 09/02 | 4D0121251J | **734754** | 632 449 | ALB |
| 2.5 TDi V6 24V 4D2G | D | 2496 | AFB,AKN | M | | TSW | 06/97 ▸ 12/98 | 4D0121251J | **734754** | 632 449 | ALB |
| **A8 (2002>2007)** | | | | | | | | | | |
| 3.0 i V6 30V 4E20 ; 4E80 | E | 2976 | ASN,BBJ | A | | | 07/03 ▸ 05/06 | 4E0121251C | **735033** | 725 480 | ALB |
| 3.2 FSi V6 24V 4E20 ; 4E80 | E | 3123 | BPK | A | | | 06/05 ▸ 10/07 | 4E0121251C | **735033** | 725 480 | ALB |
| 3.7 i V8 40V 4E20 | E | 3697 | BFL | A | | | 11/02 ▸ 05/06 | 4E0121251C | **735033** | 725 480 | ALB |
| 3.7 i V8 40V<br>▸ 4E-5-005 520 4E20 | E | 3697 | BFL | A | +/- | | 11/02 ▸ 07/04 | 4E0121251C | **735033** | 725 480 | ALB |
| 4.2 i V8 40V 4E20 ; 4E80 | E | 4172 | BFM | A | | | 11/02 ▸ 05/06 | 4E0121251C | **735033** | 725 480 | ALB |
| 4.2 i V8 40V<br>▸ 4E-5-005 520 4E20 ; 4E80 | E | 4172 | BFM | A | +/- | | 11/02 ▸ 07/04 | 4E0121251C | **735033** | 725 480 | ALB |
| 6.0 i W12 48V 4E20 ; 4E80 | E | 5998 | BHT | A | | | 02/04 ▸ 10/07 | 4E0121251C | **735033** | 725 480 | ALB |
| 3.0 TDi V6 24V 4E20 ; 4E80 | D | 2967 | ASB | A | | | 01/04 ▸ 10/07 | 4E0121251C | **735033** | 725 480 | ALB |
| 4.0 TDi V8 32V 4E20 ; 4E80 | D | 3996 | ASE | A | | | 05/03 ▸ 07/05 | 4E0121251C | **735033** | 725 480 | ALB |
| **CABRIOLET** | | | | | | | | | | |
| 1.8 E 20V 8G70 | E | 1781 | ADR | M | + | TSW | 04/97 ▸ 08/00 | 8A0121251 | **731422** | 596 358 | ALB |
| 1.8 E 20V 8G70 | E | 1781 | ADR | M | | TSW | 04/97 ▸ 08/00 | 8A0121251E | **731503** | 596 408 | ALB |
| 1.8 E 20V 8G70 | E | 1781 | ADR | M | | TSW | 04/97 ▸ 07/98 | 893121253A | **730349** | 602 302 | CBS |
| 1.8 E 20V 8G70 | E | 1781 | ADR | A | + | TSW | 04/97 ▸ 12/99 | 8A0121251 | **731422** | 596 358 | ALB |
| 1.8 E 20V 8G70 | E | 1781 | ADR | A | | TSW | 04/97 ▸ 12/99 | 893121253A | **730349** | 602 302 | CBS |
| 2.0 E 8G70 | E | 1984 | ABK | M | +/- | TSW | 01/93 ▸ 07/98 | 893121251H | **730972** | 620 322 | ALM |
| 2.0 E,2.0 E 16V 8G70 | E | 1984 | ABK,ACE | M | + | TSW | 01/93 ▸ 09/98 | 8A0121251 | **731422** | 596 358 | ALB |
| 2.0 E 8G70 | E | 1984 | ABK | M | | TSW | 01/93 ▸ 09/98 | 893121253A | **730349** | 602 302 | CBS |
| 2.3 E 8G70 | E | 2309 | NG | M | + | TSW | 06/91 ▸ 07/94 | 893121251G | **731505** | 477 376 | ALB |
| 2.3 E 8G70 | E | 2309 | NG | M | | TSW | 06/91 ▸ 07/94 | 893121251F | **883863** | 470 377,5 | ALM |
| 2.3 E 8G70 | E | 2309 | NG | A | + | TSW | 06/91 ▸ 07/94 | 893121251G | **731505** | 477 376 | ALB |
| 2.3 E 8G70 | E | 2309 | NG | A | | TSW | 06/91 ▸ 07/94 | 893121251N | **731760** | 475 375 | ALB |
| 2.6 E V6 8G70 | E | 2598 | ABC,ACZ | M | | TSW | 01/94 ▸ 08/00 | 8A0121251B | **731429** | 596 408 | ALB |
| 2.6 E V6 8G70 | E | 2598 | ABC,ACZ | A | | TSW | 01/94 ▸ 08/00 | 8A0121251C | **731430** | 596 408 | ALB |
| 2.8 i V6 8G70 | E | 2771 | AAH | M | | TSW | 11/92 ▸ 08/00 | 8A0121251B | **731429** | 596 408 | ALB |
| 2.8 i V6 8G70 | E | 2771 | AAH | A | | TSW | 01/93 ▸ 08/00 | 8A0121251C | **731430** | 596 408 | ALB |
| 1.9 TDi 8G70 | D | 1896 | AHU | M | + | TSW | 07/96 ▸ 12/99 | 8A0121251 | **731422** | 596 358 | ALB |
| **COUPÉ (80>88)** | | | | | | | | | | |
| 1.9 8553 ; 8563 | E | 1921 | WN | A | - | TSW | 10/80 ▸ 08/83 | 85512125 1F | **883863** | 470 377,5 | ALM |
| 1.9 8553 ; 8563 | E | 1921 | WN | M | - | TSW | 10/80 ▸ 08/83 | 85512125 1F | **883863** | 470 377,5 | ALM |
| 2.0 i 8553 ; 8563 ; 855K | E | 1994 | HP,JS | M | - | TSW | 08/83 ▸ 07/86 | 893121251K | **883863** | 470 377,5 | ALM |
| 2.0 i 8553 ; 8563 ; 855K | E | 1994 | HP,JS | A | - | TSW | 08/83 ▸ 07/86 | 893121251K | **883863** | 470 377,5 | ALM |
| 2.2 i 8553 | E | 2144 | WE | M | +/- | TSW | 09/81 ▸ 08/82 | 85512125 1F | **883863** | 470 377,5 | ALM |
| 2.2 i 8553 | E | 2144 | WE | A | +/- | TSW | 04/81 ▸ 08/83 | 85512125 1F | **883863** | 470 377,5 | ALM |
| 2.2 i 8559 ; 855K | E | 2226 | HY,KV,KX | A | +/- | TSW | 01/85 ▸ 07/88 | 893121251K | **883863** | 470 377,5 | ALM |
| 2.2 i 8563 ; 8553 | E | 2226 | KV | M | - | TSW | 08/84 ▸ 07/88 | 893121251K | **883863** | 470 377,5 | ALM |
| 2.3 i 855K | E | 2309 | NG | A | + | TSW | 02/87 ▸ 07/88 | 893121251G | **731505** | 477 376 | ALB |
| **COUPÉ (88>96)** | | | | | | | | | | |
| 1.8 E 8B30 | E | 1781 | DZ | M | - | TSW | 08/89 ▸ 07/91 | 893121251 | **819260** | 602 302 | CBS |
| 2.0 E 16V,2.0 i 16V 8B30 | E | 1984 | ABK,6A,ACE | M | +/- | TSW | 01/92 ▸ 03/95 | 8A0121251 | **731422** | 596 358 | ALB |
| 2.0 E 8B30 | E | 1984 | ABK | M | - | TSW | 08/91 ▸ 01/96 | 893121251H | **730972** | 620 322 | ALM |
| 2.0 i 8B30 | E | 1984 | 3A,AAD | M | - | TSW | 08/89 ▸ 07/91 | 893121251 | **819260** | 602 302 | CBS |
| 2.0 i 8B30 | E | 1984 | 3A,AAD | A | - | TSW | 08/89 ▸ 07/91 | 893121251 | **819260** | 602 302 | CBS |
| 2.0 E,2.0 i 8B30 | E | 1984 | 3A,AAD,ABK | M | - | TSW | 08/89 ▸ 01/96 | 893121253A | **730349** | 602 302 | CBS |

# AUDI (.../...)

## COUPÉ (88>96) (.../...)

| Type Ctr. | | CC | | AC | | | OE | Valeo | DIM. | TECH |
|---|---|---|---|---|---|---|---|---|---|---|
| 2.0 E 8B30 | E | 1984 | ABK | A | | TSW | 08/91 ▸ 01/96 | 8A0121251A | **731428** | 596 358 | ALB |
| 2.0 i 8B30 | E | 1984 | 3A,AAD | A | - | TSW | 08/89 ▸ 07/91 | 893121253A | **730349** | 602 302 | CBS |
| 2.0 E 20V 8B30 | E | 1994 | NM | M | +/- | TSW | 11/88 ▸ 07/91 | 893121251F | **883863** | 470 377,5 | ALM |
| 2.2 i 8B30 | E | 2226 | KV | M | +/- | TSW | 11/88 ▸ 07/91 | 893121251K | **883863** | 470 377,5 | ALM |
| 2.3 E,2.3 Turbo 20V 8B30<br>2.3 i 20V | E | 2309 | 3B,7A,NG | M | +/- | TSW | 11/88 ▸ 07/94 | 893121251G | **731505** | 477 376 | ALB |
| 2.3 E,2.3 i 20V 8B30 | E | 2309 | 7A,NG | M | +/- | TSW | 11/88 ▸ 07/94 | 893121251F | **883863** | 470 377,5 | ALM |
| 2.3 i 20V 8B30 | E | 2309 | 7A | M | +/- | TSW | 08/89 ▸ 07/91 | 893121251N | **731760** | 475 375 | ALB |
| 2.3 E,2.3 i 20V 8B30 | E | 2309 | 7A,NG | A | +/- | TSW | 08/89 ▸ 05/94 | 893121251N | **731760** | 475 375 | ALB |
| 2.6 E V6 8B30 | E | 2598 | ABC | M | | TSW | 08/92 ▸ 01/96 | 8A0121251B | **731429** | 596 408 | ALB |
| 2.6 E V6 8B30 | E | 2598 | ABC | A | | TSW | 08/92 ▸ 01/96 | 8A0121251C | **731430** | 596 408 | ALB |
| 2.8 i V6 8B30 | E | 2771 | AAH | A | | TSW | 09/91 ▸ 03/95 | 8A0121251C | **731430** | 596 408 | ALB |
| 2.8 i V6 8B30 | E | 2771 | AAH | M | + | TSW | 08/91 ▸ 05/95 | 8A0121251D | **731429** | 596 408 | ALB |
| 2.8 i V6 8B30 | E | 2771 | AAH | M | + | TSW | 08/91 ▸ 05/95 | 8A0121251B | **731429** | 596 408 | ALB |
| 2.8 i V6 8B30 | E | 2771 | AAH | M | | TSW | 09/91 ▸ 05/95 | 8A0121251B | **731429** | 596 408 | ALB |

## Q5

| | | | | | | | | | | | |
|---|---|---|---|---|---|---|---|---|---|---|---|
| 2.0 TFSI 16V 8RB0 | E | 1984 | CDNC | A | +/- | TSW | 11/08 ▸ | 8K0121251T | •**735472** | 721,5 476 | ALB |
| 3.2 FSI V6 24V 8RB/0/5 | E | 3197 | CALB | A | +/- | TSW | 11/08 ▸ | 8K0121251AA | •**735473** | 722 474 | ALB |
| 2.0 TDI 16V 8RB0 | D | 1968 | CAHA/F,CAHB/F | M | +/- | | 11/08 ▸ | 8K0121251R | •**735471** | 720 480 | ALM |
| 2.0 TDI 16V 8RB0 | D | 1968 | CAHA/F,CAHB/F | A | +/- | TSW | 11/08 ▸ | 8K0121251T | •**735472** | 721,5 476 | ALB |

## Q7

| | | | | | | | | | | | |
|---|---|---|---|---|---|---|---|---|---|---|---|
| 3.6 FSi V6 24V 4LB0 | E | 3597 | BHK | M | + | TSW | 08/06 ▸ 05/08 | 7L0121253A | **734741** | 710 551 | ALB |
| 3.6 FSi V6 24V 4LB0 | E | 3597 | BHK | A | + | TSW | 08/06 ▸ | 7L0121253A | **734741** | 710 551 | ALB |
| 4.2 FSi V8 4LB0 | E | 4163 | BAR | A | +/- | TSW | 03/06 ▸ 05/10 | 7L0121253A | **734741** | 710 551 | ALB |
| 3.0 TFSi V6 24V 4LB/0/5 | E | 2995 | CJTB,CJTC,CJWB,CJWC,CNAA | A | +/- | TSW | 05/10 ▸ | 7L0121253A | **734741** | 710 551 | ALB |
| 3.0 TDI V6,3.0 TDI V6 24V 4LB/0/5<br>3.0 TDi V6 DPF | D | 2967 | BUG,BUN,CASA/F,CASB/F,CATA/F,CCMA/F,CJGA/F | A | +/- | TSW | 06/09 ▸ | 7L0121253A | **734741** | 710 551 | ALB |
| 4.2 TDI V8 32V 4LB0 | D | 4134 | BTR/F,CCFC | A | +/- | TSW | 03/07 ▸ | 7L0121253A | **734741** | 710 551 | ALB |

## QUATTRO

| | | | | | | | | | | | |
|---|---|---|---|---|---|---|---|---|---|---|---|
| 2.2 i Turbo 857/0/1/2/3/6/7 | E | 2144 | GV,WR,WX | M | | | 07/80 ▸ 07/89 | 85712125 1B | | 480 379 | CBS |
| 2.2 i Turbo 857/0/1/2/3/6/7 | E | 2144 | GV,WR,WX | A | +/- | | 07/80 ▸ 07/89 | 85712125 1B | | 480 379 | CBS |
| 2.3 i Turbo 857/0/1<br>2.3 i Turbo 20V | E | 2226 | MB,RR | M | | | 08/87 ▸ 07/91 | 85712125 1B | | 480 379 | CBS |
| 2.3 i Turbo 857/0/1<br>2.3 i Turbo 20V | E | 2226 | MB,RR | A | +/- | | 08/87 ▸ 07/91 | 85712125 1B | | 480 379 | CBS |

## RS2 (94>95)

| | | | | | | | | | | | |
|---|---|---|---|---|---|---|---|---|---|---|---|
| 2.2 Turbo 8C57 | E | 2226 | ADU | M | | TSW | 03/94 ▸ 06/95 | 8A0121251B | **731429** | 596 408 | ALB |
| 2.2 Turbo 8C57 | E | 2226 | ADU | A | | TSW | 03/94 ▸ 06/95 | 8A0121251B | **731429** | 596 408 | ALB |

## RS6 QUATTRO

| | | | | | | | | | | | |
|---|---|---|---|---|---|---|---|---|---|---|---|
| 4.2 i V8 40V 4B40 ; 4B60 | E | 4172 | BCY | A | | TSW | 07/02 ▸ 09/04 | 4B3121251D | **734859** | 682 440 | ALB |

## S3 (98>2003)

| | | | | | | | | | | | |
|---|---|---|---|---|---|---|---|---|---|---|---|
| 1.8 i Turbo 20V 8L1B | E | 1781 | AMK,APY | M | + | TSW | 11/98 ▸ 04/02 | 1J0121253AD | **731606** | 414,5 650 | ALM |
| 1.8 i Turbo 20V 8L1/B/S | E | 1781 | AMK,BAM | A | +/- | TSW | 09/00 ▸ 06/03 | 1J0121253AD | **731606** | 414,5 650 | ALM |

## S3 (2006>)

| | | | | | | | | | | | |
|---|---|---|---|---|---|---|---|---|---|---|---|
| 2.0 TFSi 16V 8P1S ; 8PAS | E | 1984 | BZC,CDLA,CDLC | M | +/- | Air Seal | 06/07 ▸ | 1K0121251DM | **734333** | 650 454,3 | ALB |
| 2.0 TFSi 16V 8P1S ; 8PAS | E | 1984 | CDLA,CDLC | A | +/- | Air Seal | 11/08 ▸ | 1K0121251DM | **734333** | 650 454,3 | ALB |

## S4 (97>99)

| | | | | | | | | | | | |
|---|---|---|---|---|---|---|---|---|---|---|---|
| 2.7 i V6 Bi Turbo 30V 8D50 ; 8D2/0/5 | E | 2671 | AGB,APB | M | + | TSW | 10/97 ▸ 01/99 | 8D0121251L | **731757** | 630 412 | ALM |
| 2.7 i V6 Bi Turbo 30V 8D25 | E | 2671 | APB | A | + | TSW | 08/98 ▸ 01/99 | 8D0121251BB | **731757** | 630 412 | ALM |

## S4 (2008>)

| | | | | | | | | | | | |
|---|---|---|---|---|---|---|---|---|---|---|---|
| 3.0 TFSI V6 24V 8K2S ; 8K5S | E | 2995 | CAKA | M | +/- | | 11/08 ▸ | 8K0121251H | •**735474** | 721,5 474 | ALB |
| 3.0 TFSI V6 24V 8K2S ; 8K5S | E | 2995 | CAKA | A | +/- | | 11/08 ▸ | 8K0121251AA | •**735473** | 722 474 | ALB |

## S6 (94>97)

| | | | | | | | | | | | |
|---|---|---|---|---|---|---|---|---|---|---|---|
| 2.2 i Turbo 20V 4A28 ; 4A58 | E | 2226 | AAN | M | | TSW | 07/94 ▸ 07/97 | 4A0121251A | **730361** | 632 414 | ALM |
| 2.2 i Turbo 20V 4A28 ; 4A58 | E | 2226 | AAN | A | | | 07/94 ▸ 07/97 | 4A0121251C | | 632 412 | ALM |
| 4.2 i V8 32V 4A28 ; 4A58 | E | 4172 | AEC | M | +/- | | 07/94 ▸ 10/97 | 4A0121251B | | 632 412 | ALM |
| 4.2 i V8 32V 4A28 ; 4A58 | E | 4172 | AEC | M | | | 07/94 ▸ | 4A0121251S | | 632 412 | ALM |
| 4.2 i V8 32V 4A28 ; 4A58 | E | 4172 | AEC | A | | | 07/94 ▸ 10/97 | 4A0121251B | | 632 412 | ALM |

## S6 (99>2001)

| | | | | | | | | | | | |
|---|---|---|---|---|---|---|---|---|---|---|---|
| 4.2 i V8 40V 4B40 ; 4B60 | E | 4172 | AQJ | M | +/- | TSW | 09/99 ▸ 05/01 | 4B3121251D | **734859** | 682 440 | ALB |

Radiator Ψυγείο Vodní chladič Radiator vízhűtő Радиатор Radiador Radiator Radyatör Radiator Radiatore di raffreddamento Motorkühler Radiateur Radiator



• **New** Nouveau **Nuevo** Novo **Nuovo** Nieuw **Neu** Nowość **Yeni** Новый Νέο **Nový**

| | Type Ctr. | | CC | | AC | | | OE | Valeo | DIM. | TECH |
|---|---|---|---|---|---|---|---|---|---|---|---|
| **AUDI (.../...)** | | | | | | | | | | | |
| **S6 (99>2001) (.../...)** | | | | | | | | | | | |
| 4.2 i V8 40V | 4B40 ; 4B60 | E | 4172 | ANK | M | | TSW | 09/00 ▸ 05/01 | 4B3121251D | **734859** | 682 440 ALB |
| 4.2 i V8 40V | 4B40 ; 4B60 | E | 4172 | AQJ,ANK | A | +/- | TSW | 09/99 ▸ 05/01 | 4B3121251D | **734859** | 682 440 ALB |
| **S6 (2001>2005)** | | | | | | | | | | | |
| 4.2 i V8 40V | 4B40 ; 4B60 | E | 4172 | ANK | A | | TSW | 06/01 ▸ 01/05 | 4B3121251D | **734859** | 682 440 ALB |
| **TT (98>2006)** | | | | | | | | | | | |
| 1.8 i Turbo 20V | 8N30 ; 8N90 | E | 1781 | AJQ,APP,APX,ARY,AUQ,BAM | M | +/- | TSW | 10/98 ▸ 06/06 | 1J0121253AD | **731606** | 414,5 650 ALM |
| 1.8 i Turbo 20V | 8N30 ; 8N90 | E | 1781 | ARY,AUQ,BAM,BFV,BVR | A | + | TSW | 09/00 ▸ 06/06 | 1J0121253AD | **731606** | 414,5 650 ALM |
| 3.2 i V6 | 8N30 ; 8N90 | E | 3189 | BHE | M | | TSW | 07/03 ▸ 06/06 | 1J0121253S | **732427** | 648,6 414 ALB |
| 3.2 i V6 | 8N30 ; 8N90 | E | 3189 | BHE | A | + | TSW | 07/03 ▸ 06/06 | 1J0121253S | **732427** | 648,6 414 ALB |
| **TT (2006>)** | | | | | | | | | | | |
| 1.8 TFSi 16V | 8J30 ; 8J90 | E | 1798 | CDAA | M | | Air Seal | 06/08 ▸ | 1K0121251DM | **734333** | 650 454,3 ALB |
| 2.0 TFSi 16V | 8J3S ; 8J9S | E | 1984 | CDLA,CDLB | M | +/- | Air Seal | 05/08 ▸ | 1K0121251DM | **734333** | 650 454,3 ALB |
| 2.0 TFSi 16V | 8J30 | E | 1984 | BWA | M | + | Air Seal | 08/06 ▸ | 1K0121251AB | **734333** | 650 454,3 ALB |
| 2.0 TFSi 16V | 8J90 | E | 1984 | BWA | M | | Air Seal | 03/07 ▸ | 1K0121251DM | **734333** | 650 454,3 ALB |
| 2.0 TFSi 16V | 8J3S ; 8J9S | E | 1984 | CDLA,CDLB | A | +/- | Air Seal | 05/08 ▸ | 1K0121251AB | **734333** | 650 454,3 ALB |
| 2.0 TFSi 16V | 8J30 ; 8J90 | E | 1984 | CCZA | A | +/- | | 06/08 ▸ | 5K0121251J | | |
| 2.0 TFSi 16V | 8J30 | E | 1984 | BWA | A | + | Air Seal | 08/06 ▸ | 1K0121251DM | **734333** | 650 454,3 ALB |
| 2.0 TFSi 16V | 8J90 | E | 1984 | BWA | A | | Air Seal | 03/07 ▸ | 1K0121251DM | **734333** | 650 454,3 ALB |
| 2.0 TDI 16V | 8J30 ; 8J90 | D | 1968 | CBBB/F | M | +/- | Air Seal | 06/08 ▸ | 1K0121251DM | **734333** | 650 454,3 ALB |
| **AUTOBIANCHI** | | | | | | | | | | | |
| **A112** | | | | | | | | | | | |
| 903 | A112B | E | 903 | A112A000,A112A200 | M | - | | > ▸ 1985 | 82397785 | **883799** | 310 359 ALM |
| 965 | A112B | E | 965 | A112B1000 | M | - | | 07/79 ▸ | 82397785 | **883799** | 310 359 ALM |
| 982 | A112A | E | 982 | A112A1000 | M | | | 09/71 ▸ 1975 | 82397785 | **883799** | 310 359 ALM |
| 1050 | A112B | E | 1049 | A112AB2C0 | M | - | | 06/75 ▸ 1985 | 82397785 | **883799** | 310 359 ALM |
| **Y10** | | | | | | | | | | | |
| 1.0,1.0 ie,1000 | 156A ; 156AA ; 156B 156AD ; 156B1 ; 156AE | E | 999 | 156A2.000,156A2.100,156A2.246 | M | - | EXP, TSW | 07/85 ▸ 09/92 | 7711521 | **816707** Cesse | 519 248 ALM |
| 1.0,1.0 ie,1000 | 156AA ; 156AE ; 156E | E | 999 | 156A2.000,156A2.246,156A3.000 | M | - | TSW | 09/86 ▸ 09/92 | 46551216 | **811392** Cesse | 580 248 ALM |
| 1050 | 156C ; 156C1 | E | 1049 | 156A.000 | M | - | EXP, TSW | 07/85 ▸ 12/88 | 7711521 | **816707** Cesse | 519 248 ALM |
| 1050 Turbo | 156D ; 156D1 | E | 1049 | 156A1.000 | M | - | TSW | 07/85 ▸ 12/88 | 46551216 | **811392** Cesse | 580 248 ALM |
| 1.1 ie | 156AC ; 156AG | E | 1108 | 156C.000,156C.046 | M | - | TSW | 01/89 ▸ 12/94 | 46551216 | **811392** Cesse | 580 248 ALM |
| 1.1 ie | 156AG ; 156CG 156BG ; 156AC | E | 1108 | 156C.000,156C.046,176B2.000 | M | +/- | EXP, TSW | 01/89 ▸ 10/95 | 7730497 | **816707** Cesse | 519 248 ALM |
| 1.1 ie | 156AG ; 156AC | E | 1108 | 156C.000,156C.046,176B2.000 | A | - | EXP, TSW | 11/89 ▸ 10/95 | 7711521 | **816707** Cesse | 519 248 ALM |
| 1.3 | 156AF | E | 1297 | 146A5.046 | M | - | | 01/89 ▸ 10/95 | 7755130 | | 519 232 CBS |
| 1.3 | 156AB | E | 1301 | 156B.000 | M | + | EXP, TSW | 01/89 ▸ 09/92 | 7730497 | **816707** Cesse | 519 248 ALM |
| 1.3 | 156AB | E | 1301 | 156B.000 | M | - | | 01/89 ▸ 09/92 | 7628800 | | 519 232 CBS |
| **BEDFORD** | | | | | | | | | | | |
| **RASCAL** | | | | | | | | | | | |
| 1.0 | 99170 ; 99180 | E | 970 | F10A | M | - | | 01/89 ▸ 06/90 | 91123003 | **731486** | 240 495 CBS |
| **BMW** | | | | | | | | | | | |
| **1 SERIES E87** | | | | | | | | | | | |
| 116i | UF/11/12 | E | 1596 | N45B16 | M | + | | 09/04 ▸ 12/06 | 17117553111 | **735195** | 600 453 ALB |
| 116i | UF/11/12 | E | 1596 | N45B16 | M | | | 09/04 ▸ | 17117521046 | **735166** | 600 453 ALB |
| 116i | UF/21/22 | E | 1596 | N45B16 | A | | | 09/04 ▸ 12/06 | 17119071518 | **734276** | 580 445 ALB |
| 118i,120i | UF/31/32/51/52 | E | 1995 | N46B/20O1/20U1 | M | + | | 09/04 ▸ 12/06 | 17117553111 | **735195** | 600 453 ALB |
| 118i,120i | UF/31/32/51/52 | E | 1995 | N46B/20O1/20U1 | M | | | 09/04 ▸ | 17117521046 | **735166** | 600 453 ALB |
| 118i,120i | UF/41/42/61/62 | E | 1995 | N46B/20O1/20U1 | A | | | 09/04 ▸ | 17117521048 | **735166** | 600 453 ALB |
| 130i | UF02 | E | 2996 | N52B30A | A | +/- | | 07/05 ▸ 02/07 | 17117562079 | **735194** | 600 435 ALB |
| 130i | UF02 | E | 2996 | N52B30A | A | + | | 07/05 ▸ 12/06 | 17117534914 | •**735476** | 623 483 ALB |
| 118d,120d | UG/31/32/51/52 | D | 1995 | M47D/20TU2/20U2 | M | +/- | | 09/04 ▸ 12/06 | 17117788903 | **735165** | 600 338 ALB |
| 120d | UG/61/62 | D | 1995 | M47D/20TU2/20U2 | A | +/- | | 09/04 ▸ 12/06 | 17117788903 | **735165** | 600 338 ALB |
| **1 SERIES E87 LCI** | | | | | | | | | | | |
| 1.6 i 16V | UE/11/12 | E | 1596 | N45B16 | M | +/- | | 03/07 ▸ 08/07 | 17117553111 | **735195** | 600 453 ALB |
| 3.0 i 265 24V | UD/61/62 | E | 2996 | N52B30O1 | A | +/- | | 03/07 ▸ 09/09 | 17117562079 | **735194** | 600 435 ALB |

# BMW (.../...)

## 1 SERIES E87 LCI (.../...)

| Type Ctr. | | CC | | | AC | | | OE | Valeo | DIM. | | TECH |
|---|---|---|---|---|---|---|---|---|---|---|---|---|
| 2.0 d 16V | UD/71/72/91/92 | D | 1995 | N47D/2000/20U0 | M | +/- | | 03/07 ▸ | 17117788903 | **735165** | 600 | 338 | ALB |
| 2.0 d 16V | UD/01/02/81/82 ; UH 21/22 | D | 1995 | N47D/2000/20T0/20U0 | A | +/- | | 03/07 ▸ | 17117788903 | **735165** | 600 | 338 | ALB |

## 1 SERIES E81

| | | | | | | | | | | | | | |
|---|---|---|---|---|---|---|---|---|---|---|---|---|---|
| 3.0 i 24V,3.0 i 258 24V<br>3.0 i 265 24V | UB/21/22 ; UC/41/42<br>UL/01/02 | E | 2996 | N52B/3001/30A/30U1 | A | +/- | | 01/07 ▸ | 17117562079 | **735194** | 600 | 435 | ALB |
| 2.0 d 16V | UB/31/32 ; UK/11/12 UM/91/92 ; UP/11/12 | D | 1995 | N47D/20T0/20U0/20B | M | +/- | | 01/07 ▸ | 17117794488 | **735165** | 600 | 338 | ALB |
| 2.0 d 16V | UB/41/42/61/62 ; UM 01/02/81/82 ; UP/21/22 ; UR/21/22/41/42 | D | 1995 | N47D/20A/2000/20U0/20T0 | A | +/- | | 03/07 ▸ | 17117788903 | **735165** | 600 | 338 | ALB |

## 1 SERIES F20

| | | | | | | | | | | | | | |
|---|---|---|---|---|---|---|---|---|---|---|---|---|---|
| 114i | | E | - | N13B16K0 / 75KW | M | +/- | | 06/11 ▸ | 17117600511 | •**735451** | 600 | 348 | ALB |
| 116i | | E | - | N13B16U0 / 100KW | M | +/- | | 06/11 ▸ | 17117600511 | •**735451** | 600 | 348 | ALB |
| 118i | | E | - | N13B16M0 / 125KW | M | +/- | | 06/11 ▸ | 17117600511 | •**735451** | 600 | 348 | ALB |
| 116i | | E | - | N13B16U0 / 100KW | A | +/- | | 06/11 ▸ | 17117600516 | •**735453** | 600 | 350,2 | ALB |
| 118i | | E | - | N13B16M0 / 125KW | A | +/- | | 06/11 ▸ | 17117600516 | •**735453** | 600 | 350,2 | ALB |
| 118i | | E | - | N13B16M0 / 125KW | M | +/- | | 06/11 ▸ | 17117600520 | •**735454** | 600 | 350,2 | ALB |
| 125i | | E | - | N20B20M0 / 160KW | M | +/- | | 06/11 ▸ | 17117600520 | •**735454** | 600 | 350,2 | ALB |
| M135i | | E | - | N55B3000 / 235KW | M | +/- | | 06/11 ▸ | 17117600520 | •**735454** | 600 | 350,2 | ALB |
| M235i | | E | - | N55B3000 / 235KW | M | +/- | | 06/11 ▸ | 17117600520 | •**735454** | 600 | 350,2 | ALB |
| 125i | | E | - | N20B20M0 / 160KW | A | +/- | | 06/11 ▸ | 17117618807 | •**735455** | 600 | 350,2 | ALB |
| M135i / M235i | | E | - | N55B3000 / 235KW | A | +/- | | 06/11 ▸ | 17117618807 | •**735455** | 600 | 350,2 | ALB |
| M235i | | E | - | N55B3000 / 235KW | A | +/- | | 06/11 ▸ | 17117618807 | •**735455** | 600 | 350,2 | ALB |

## 3 SERIES E30

| | | | | | | | | | | | | | |
|---|---|---|---|---|---|---|---|---|---|---|---|---|---|
| 316i | AB/11/12 ; AC/11/12 ; AJ/11/12 | E | 1596 | M40B16ME.8 | M | - | TSW 820220 | 09/88 ▸ 09/93 | 17111719024 | **731509** | 380 | 326 | ALB |
| 316i | AB/11/12 ; AC/11/12 ; AJ/11/12 | E | 1596 | M40B16ME.8 | M | | EXP, TSW | 09/88 ▸ 09/93 | 17111728905 | **732198** | 440 | 424 | ALB |
| 316i,316i Touring | AB/21/22 ; AC/21/22 AJ/21/22 | E | 1596 | M40B16ME.8 | A | - | TSW 820220 | 09/88 ▸ 09/93 | 17111712977 | **731508** | 380 | 327 | ALB |
| 316,318i | 10/11/12/52/72 ; 13 15/31/32/52/72 ; AC/51/71 ; AK/31/51/71 | E | 1766 | M10B/18L/18V/18LE/18K | M | + | | 09/82 ▸ 09/88 | 17111709336 | | 349 | 440 | CBS |
| 316 | 10/52 ; AC51 ; AK51 ; 13/15/52 | E | 1766 | M10B18V | M | + | | 09/87 ▸ 09/88 | 17111719380 | | 346 | 449 | ALB |
| 316,318i | 10/11/12/52/72 ; 13 31/32/52/72 ; AC/51/71 ; AK/31/51/71 | E | 1766 | M10B/18V/18L/18LE/18K | M | - | | 09/82 ▸ 08/88 | 17111151700 | | 347 | 446 | ALB |
| 316,318i | 10/11/21/22/32/42/62 81/82 ; 13/41/42/82 ; AC/61/81 ; AK/41/61 | E | 1766 | M10B/18V/18LE/18L/18K | A | +/- | | 09/82 ▸ 08/88 | 17111707811 | | 349 | 440 | CBS |
| 316,318i | 10/11/21/22/32/42/62 81/82 ; 13/25/41/42/62/82 ; AC/61/81 ; AK/41 61 | E | 1766 | M10B/18LE/18V/18L/18K | A | + | | 09/82 ▸ 08/88 | 17111719381 | | 349 | 440 | CBS |
| 316 | 1325 | E | 1766 | M10B18V | A | + | | 01/88 ▸ 07/88 | 17111719380 | | 346 | 449 | ALB |
| 318i,318i Touring | AG71 ; AF/51/52 ; AJ 51/52/72 ; BA/51/52 | E | 1796 | M40B/18/18ME | M | - | TSW 820220 | 09/87 ▸ 09/93 | 17111719024 | **731509** | 380 | 326 | ALB |
| 318iS | AF91 | E | 1796 | M42B18 | M | - | TSW | 11/89 ▸ 12/91 | 17111712982 | **730365** | 439 | 322 | ALM |
| 318i,318i Touring,318iS | AG71 ; AF/51/52/91 AJ/51/52/72 ; BA/51/52 | E | 1796 | M40B/18ME/18,M42B18 | M | | EXP, TSW | 09/87 ▸ 09/93 | 17111728905 | **732198** | 440 | 424 | ALB |
| 318iS | AF91 | E | 1796 | M42B18 | M | | TSW 820220 | 11/89 ▸ 12/91 | 17111712977 | **731508** | 380 | 327 | ALB |
| 318i,318i Touring | AG81 ; AF/61/62 ; AJ 61/62/82 ; BA/61/62 | E | 1796 | M40B/18ME/18 | A | - | TSW 820220 | 09/87 ▸ 09/93 | 17111712977 | **731508** | 380 | 327 | ALB |
| 318i Touring | AG81 ; AJ82 | E | 1796 | M40B18 | A | | EXP, TSW | 09/88 ▸ 09/93 | 17111728905 | **732198** | 440 | 424 | ALB |
| 320i | 1432 ; AA31 ; AD31 ; 11/32 | E | 1991 | M20B20 | M | +/- | | 09/82 ▸ 09/87 | 17111177702 | | 375 | 450 | ALB |
| 320iS | AC95 ; AK95 | E | 1991 | S14B20 | M | +/- | | 01/88 ▸ 12/91 | 17112225592 | | 438 | 375 | ALB |
| 320i | 1432 ; AA31 ; AD31 ; 11/32 | E | 1991 | M20B20M1.Z7 | M | + | | 09/82 ▸ 12/91 | 17111176900 | | 550 | 450 | ALB |
| 320i,320i Touring | 11/32/51/52 ; AA31 AD31 ; 14/32/51/52 ; AH/51/52/71 ; BA/11/12 21/22/31/32 | E | 1991 | M20B/20M1.Z7/20 | M | + | | 09/87 ▸ 09/93 | 17111712850 | | 440 | 438 | CBS |
| 320i | 11/32/51 ; AA31 ; AD31 ; BA31 ; 14/32/51 | E | 1991 | M20B/20/20M1.Z7 | M | - | TSW | 09/82 ▸ 09/87 | 17111707563 | **819395** | 375 | 438 | ALB |
| 320i | 1432 ; AA31 ; AD31 ; BA31 ; 11/32 | E | 1991 | M20B20 | M | - | | 09/85 ▸ 12/91 | 17111709327 | | 430 | 375 | ALB |
| 320i,320i Touring | 11/32/51/52 ; AA31 AD31 ; 14/32/51/52 ; AH/51/52/71 ; BA/11/12 21/22/31/32 | E | 1991 | M20B/20M1.Z7/20 | M | - | TSW | 09/87 ▸ 09/93 | 17111712823 | **819397** | 440 | 328 | ALB |
| 320i | 1442 ; AA41 ; AD41 ; 11/42 | E | 1991 | M20B20 | A | + | | 09/82 ▸ 09/87 | 17111176901 | | 550 | 455 | CBS |
| 320i | 1442 ; AA41 ; AD41 ; 11/42 | E | 1991 | M20B20 | A | + | | 09/82 ▸ 09/85 | 17111177850 | | 375 | 450 | ALB |
| 320i,320i Touring | 11/42/61/62 ; AA41 AD41 ; 14/42/62 ; AH/61/62/81 ; BA/41/42 | E | 1991 | M20B/20/20M1.Z7/20K | A | + | | 09/87 ▸ 09/93 | 17111712851 | | 440 | 438 | CBS |
| 320i | 1442 ; AA41 ; AD41 ; 11/42 ; BA/41/42 | E | 1991 | M20B/20K/20 | A | - | | 09/85 ▸ 09/87 | 17111707564 | | 375 | 438 | ALB |
| 320i,320i Touring | 11/42/61/62 ; AA41 AD41 ; 14/42/62 ; AH/61/62/81 ; BA/41/42 | E | 1991 | M20B/20M1.Z7/20/20K | A | - | | 09/87 ▸ 09/93 | 17111712824 | | 440 | 328 | ALB |
| 323i | 11/71 ; 14/71/72 | E | 2316 | M20B23L | M | +/- | | 09/82 ▸ 09/86 | 17111177702 | | 375 | 450 | ALB |

Radiator Ψυγείο Vodní chladič Радиатор vízhűtő Radiador Radiator Radyatör Radiator Radiatore di raffreddamento Motorkühler Radiateur Radiator



• **New** Nouveau **Nuevo** Novo **Nuovo** Nieuw **Neu** Nowość **Yeni** Новый Νέο **Novy**

# BMW (.../...)

## 3 SERIES E30 (.../...)

| | | | | | | | | | | | | |
|---|---|---|---|---|---|---|---|---|---|---|---|---|
| 323i | 11/71 ; 14/71/72 | E | 2316 | M20B23L | M | +/- | | 09/85 ▸ 09/86 | 17111709327 | | 430 375 | ALB |
| 323i | 11/71 ; 14/71/72 | E | 2316 | M20B23L | M | + | | 09/82 ▸ 09/86 | 17111176900 | | 550 450 | ALB |
| 323i | 11/81/82 ; 14/81/82 | E | 2316 | M20B23L | A | + | | 09/82 ▸ 09/86 | 17111176901 | | 550 455 | CBS |
| 323i | 11/81/82 ; 14/81/82 | E | 2316 | M20B23L | A | - | | 09/82 ▸ 09/86 | 17111177850 | | 375 450 | ALB |
| 323i | 11/81/82 ; 14/81/82 | E | 2316 | M20B23L | A | - | | 09/85 ▸ 09/86 | 17111707564 | | 375 438 | ALB |
| 325i,325iX | 11/11/12 ; 1411 ; 12 31/32/71 ; 15/31/32/71 ; BB/11/31/32 | E | 2494 | M20B/25M/G/25M1.Z7/25ME | M | + | | 09/85 ▸ 09/87 | 17111176900 | | 550 450 | ALB |
| 325i,325i Touring,325iX 325iX Touring | 11/11/12 ; 12/31/32 71/91 ; 14/11/12 15/31/32/71/91 ; AG/51/52/95 ; BB/11/12/31 32 | E | 2494 | M20B/25M1.Z7/25M/G/25ME | M | + | | 02/87 ▸ 09/93 | 17111712850 | | 440 438 | CBS |
| 325i,325iX | 11/11/12 ; 1411 ; 12 31/32/71/91 ; 15/31/32/71/91 ; BB/11/31/32 | E | 2494 | M20B/25ME/25M1.Z7/25M/G | M | - | TSW | 09/85 ▸ 09/87 | 17111707563 | **819395** | 375 438 | ALB |
| 325i,325i Touring,325iX 325iX Touring | 11/11/12 ; 12/31/32 71/91 ; 14/11/12 15/31/32/71/91 ; AG/51/52/95 ; BB/11/12/31 32 | E | 2494 | M20B/25M1.Z7/25ME/25M/G | M | - | TSW | 02/87 ▸ 09/93 | 17111712823 | **819397** | 440 328 | ALB |
| 325i | BB32 | E | 2494 | M20B25M/G | M | | | 04/86 ▸ 09/87 | 17111707564 | | 375 438 | ALB |
| 325i,325iX | 11/21 ; 12/01/41/42 81 ; 14/21/22 ; 15/01/41/42/81 ; BB/21/41/42 | E | 2494 | M20B/25M1.Z7/25M/G/25ME | A | + | | 09/85 ▸ 09/87 | 17111176901 | | 550 455 | CBS |
| 325i,325i Touring,325iX 325iX Touring | 11/21/22 ; 12/01/41 42/81 ; 14/21/22 15/01/41/42/81 ; AG/05/61/62 ; BB/21/22/41 42 | E | 2494 | M20B/25M1.Z7/25ME/25M/G | A | + | | 09/87 ▸ 09/93 | 17111712851 | | 440 438 | CBS |
| 325iX Touring | AG05 | E | 2494 | M20B/25M1.Z7/25ME/25M/G | A | +/- | | 06/88 ▸ 09/93 | 17111712824 | | 440 328 | ALB |
| 325i,325iX | 11/21 ; 12/01/41/42 81 ; 14/21/22 ; 15/01/41/42/81 ; BB/21/41/42 | E | 2494 | M20B/25M/G/25M1.Z7/25ME | A | - | | 09/85 ▸ 09/87 | 17111707564 | | 375 438 | ALB |
| 325e | 12/51/52 ; 15/51/52 | E | 2693 | M20B27M1.Z7 | M | +/- | | 02/85 ▸ 08/87 | 17111176900 | | 550 450 | ALB |
| 325e | 12/61/62 ; 15/61/62 | E | 2693 | M20B/27ME/27M1.Z7 | A | +/- | | 02/85 ▸ 08/87 | 17111176901 | | 550 455 | CBS |
| 324d | AE11 | D | 2443 | M21D24W | M | +/- | | 09/85 ▸ 09/87 | 17111709457 | | 550 438 | CBS |
| 324d | AE21 | D | 2443 | M21D24W | A | +/- | | 09/85 ▸ 08/87 | 17111709457 | | 550 438 | CBS |

## 3 SERIES E36

| | | | | | | | | | | | | |
|---|---|---|---|---|---|---|---|---|---|---|---|---|
| 316i | CA/11/12/72 ; CG/10/16/18 | E | 1596 | M40B16ME.8,M43B16 | M | +/- | EXP, TSW | 12/90 ▸ 04/01 | 17111728905 | **732198** | 440 424 | ALB |
| 316i | BE/11/12 ; CA/11/12/71/72 ; CE/11/12 ; CG/10 11/12/16/18 | E | 1596 | M40B16ME.8,M43B16 | M | - | TSW | 12/90 ▸ 04/01 | 17111723537 | **730365** | 439 322 | ALM |
| 316i | CA/21/22 | E | 1596 | M40B16ME.8 | A | +/- | | 04/91 ▸ 10/91 | 17111723528 | | 440 438 | ALB |
| 316i | BE/21/22 ; CA/21/22/81/82 ; CE/21/22 ; CG/20 21/22/26/28 | E | 1596 | M40B16ME.8,M43B16 | A | +/- | EXP, TSW | 10/91 ▸ 04/01 | 17111728905 | **732198** | 440 424 | ALB |
| 318i,318iS,318ti | CA/31/32/51/52/91 CG/51/52 | E | 1796 | M40B/18,M42B/18,M43B18 | M | +/- | EXP, TSW | 12/90 ▸ 02/98 | 17111728905 | **732198** | 440 424 | ALB |
| 318i,318iS,318ti | BE/51/52 ; BH/31/32 CA/31/32/51/52/91/92 ; CE/31/32 ; CG/51/52 | E | 1796 | M40B18,M42B/18,M43B/18 | M | - | TSW | 12/90 ▸ 02/00 | 17111723537 | **730365** | 439 322 | ALM |
| 318i,318iS,318ti | BE/61/62 ; BH/41/42 CA/01/02/41/61/62 ; CE/41/42 ; CG/61/62 | E | 1796 | M40B18,M42B/18,M43B/18 | A | +/- | EXP, TSW | 10/91 ▸ 02/00 | 17111728905 | **732198** | 440 424 | ALB |
| 318i | CA/41/42 | E | 1796 | M40B18 | A | - | | 01/91 ▸ 10/91 | 17111723528 | | 440 438 | ALB |
| 318iS | | E | 1895 | M44B19 | M | +/- | EXP, TSW | 12/95 ▸ 02/98 | 17101247145 | **732198** | 440 424 | ALB |
| 318ti | CG72 | E | 1895 | M44B19 | M | +/- | EXP, TSW | 04/96 ▸ 04/01 | 17111728905 | **732198** | 440 424 | ALB |
| 316i,318iS,318ti | CG71 ; BE/71 ; CS 10/11/12/15/16/17/18 | E | 1895 | M43B/19-E46,M43B19-E46G,M44B/19 | M | + | EXP, TSW | 12/95 ▸ 04/01 | 17111728905 | **732198** | 440 424 | ALB |
| 316i,318iS,318ti | BE/71 ; CS ; CG/71 72 | E | 1895 | M43B19-E46G,M44B19 | M | - | TSW | 12/95 ▸ 04/01 | 17111723537 | **730365** | 439 322 | ALM |
| 318iS,318ti | BE/81 ; CG/81/82 | E | 1895 | M44B19 | A | +/- | EXP, TSW | 12/95 ▸ 04/01 | 17111728905 | **732198** | 440 424 | ALB |
| 316i | CS/20/21/22/28 | E | 1895 | M43B19-E46 | A | + | EXP, TSW | 01/99 ▸ 04/01 | 17111728905 | **732198** | 440 424 | ALB |
| 316i,318iS,318ti | CG82 ; BE/81 ; CS/20 21/22/28 | E | 1895 | M43B19-E46,M44B19 | A | - | EXP, TSW | 12/95 ▸ | 17111723990 | **732198** | 440 424 | ALB |
| 318iS | BE81 | E | 1895 | M44B19 | A | - | TSW | 07/96 ▸ 02/00 | 17111723537 | **730365** | 439 322 | ALM |
| 316i | CS/20/21/22/28 | E | 1895 | M43B19-E46 | A | - | TSW | 01/99 ▸ 04/01 | 17111712982 | **730365** | 439 322 | ALM |
| 320i | BF/11/12/51 ; BJ/11/12/31/32 ; CB/11/12/51 52 ; CE/51/52 | E | 1991 | M50B20,M52B20 | M | + | EXP, TSW | 12/90 ▸ 02/00 | 17111728905 | **732198** | 440 424 | ALB |
| 320i | BF51 | E | 1991 | M52B20 | M | +/- | TSW | 08/94 ▸ 02/00 | 17111712982 | **730365** | 439 322 | ALM |
| 320i | CB/21/22 | E | 1991 | M50B20,M52B20 | A | +/- | EXP, TSW | 09/92 ▸ 06/95 | 17111728905 | **732198** | 440 424 | ALB |
| 320i | BF/21/22 ; CB/21/22 | E | 1991 | M50B20 | A | + | | 12/90 ▸ 09/92 | 17111723528 | | 440 438 | ALB |
| 320i | BF/21/22/61 ; CB/21/22 | E | 1991 | M50B20,M52B20 | A | - | TSW | 12/90 ▸ 02/00 | 17101723898 | **731512** | 441 435 | ALB |
| 320i | BF/21/22 ; CB/21/22 | E | 1991 | M50B20 | A | - | | 12/90 ▸ 09/92 | 17111723697 | | 440 438 | ALB |
| 320i | BJ/41/42 | E | 1991 | M52B20 | A | +/- | TSW | 07/94 ▸ 02/00 | 17111712982 | **730365** | 439 322 | ALM |
| 323i,325i | BF/31/32 ; CB/31/71 72 | E | 2494 | M50B25,M52B25 | M | +/- | TSW | 12/90 ▸ 02/00 | 17111712982 | **730365** | 439 322 | ALM |
| 323i,325i | BF/31/32/71/72 ; BJ 51/52/71 ; CB/31/32/71/72 ; CE/71/72 | E | 2494 | M50B25,M52B25 | M | + | EXP, TSW | 12/90 ▸ 02/00 | 17111728905 | **732198** | 440 424 | ALB |

# BMW (.../...)

## 3 SERIES E36 (.../...)

| Type Ctr. | | CC | | AC | | | OE | Valeo | DIM. | | TECH |
|---|---|---|---|---|---|---|---|---|---|---|---|
| 323ti CG31 ; CT31 | E | 2494 | M52B/25/25-EU3 | M | | EXP, TSW | 08/97 ▸ 04/01 | 17111728905 | **732198** | 440 | 424 | ALB |
| 325i CB41 | E | 2494 | M50B25 | A | +/- | TSW | 09/92 ▸ 07/95 | 17111712982 | **730365** | 439 | 322 | ALM |
| 325i BF/41/42 ; CB/41/42 | E | 2494 | M50B25 | A | + | | 12/90 ▸ 09/92 | 17111723528 | | 440 | 438 | ALB |
| 323i,325i BF/41/42/81/82 ; BJ 61/62/81/82 ; CB/81/82 ; CE/81/82 | E | 2494 | M50B25,M52B25 | A | +/- | EXP, TSW | 09/92 ▸ 02/00 | 17111728905 | **732198** | 440 | 424 | ALB |
| 325i BF/41/42 | E | 2494 | M50B25 | A | - | | 09/91 ▸ 09/92 | 17111723697 | | 440 | 438 | ALB |
| 325i CB41 | E | 2494 | M50B25 | A | | | 12/90 ▸ 09/92 | 17111723697 | | 440 | 438 | ALB |
| 323i,325i BF/41/42/81/82 ; BJ 61/62/81/82 | E | 2494 | M50B25,M52B25 | A | - | TSW | 09/91 ▸ 02/00 | 17111723898 | **731512** | 441 | 435 | ALB |
| 328i BG/10/11/12 ; BK/71/72 ; CD/11/12 ; CF/11/12 | E | 2793 | M52B28 | M | + | EXP, TSW | 01/95 ▸ 02/00 | 17111728905 | **732198** | 440 | 424 | ALB |
| 328i BG/10/11/12 ; BK/71/72 ; CD/11/12 ; CF/11/12 | E | 2793 | M52B28 | M | - | TSW | 01/95 ▸ 02/00 | 17111712982 | **730365** | 439 | 322 | ALM |
| 328i BG/21/22 ; BK/81/82 ; CD/21/22 ; CF/21/22 | E | 2793 | M52B28 | A | + | EXP, TSW | 01/95 ▸ 02/00 | 17111728905 | **732198** | 440 | 424 | ALB |
| 328i BG/21/22 ; BK/81/82 ; CD/21/22 ; CF/21/22 | E | 2793 | M52B28 | A | - | TSW | 01/95 ▸ 02/00 | 17111712982 | **730365** | 439 | 322 | ALM |
| 328i BG/21/22 ; BK/81/82 | E | 2793 | M52B28 | A | | TSW | 02/95 ▸ 02/00 | 17111723898 | **731512** | 441 | 435 | ALB |
| 318tds CC/51/52 ; CJ/50/51 52 | D | 1665 | M41D | M | +/- | TSW | 09/94 ▸ 04/01 | 17112245511 | **734289** | 550 | 330 | ALB |
| 325td,325tds CC/11/12/31/32 ; CF 91/92 | D | 2497 | M51A,M51D25 | M | +/- | | 08/91 ▸ 09/99 | 17112244753 | | 550 | 408 | ALB |
| 325td CC/21/22 | D | 2497 | M51A | A | +/- | TSW | 08/91 ▸ 09/93 | 17112244647 | **731514** | 550 | 408 | ALB |

## 3 SERIES E46

| | | | | | | | | | | | | |
|---|---|---|---|---|---|---|---|---|---|---|---|---|
| 316Ci,316i,316ti BL51 ; BX71 ; EY11 AL/51 ; AT/11/12 | E | 1596 | N40B16A,M43B16,N45B16 | M | +/- | | 04/99 ▸ 05/06 | 17119071517 | **734276** | 580 | 445 | ALB |
| 316i,316ti AT/50/51/52 ; AX/30 31/32 ; AY/30/31/32 | E | 1796 | N42B/18/18VVT | M | +/- | | 05/01 ▸ 08/05 | 17119071518 | **734276** | 580 | 445 | ALB |
| 316i,316ti AT/60/61/62 ; AX/40 41/42 ; AY/40/41/42 | E | 1796 | N42B/18/18VVT | A | + | | 05/01 ▸ 08/05 | 17119071519 | **734276** | 580 | 445 | ALB |
| 316i,318Ci,318i AL/10/11/12/30/31 32 ; AP/30/31/32 ; BL/30/31/32 ; ER/10/11/12 | E | 1895 | M43B19-E46 | M | + | | 03/98 ▸ 02/05 | 17119071518 | **734276** | 580 | 445 | ALB |
| 316i,318Ci,318i AL/20/21/22/40/41 42 ; AP/40/41/42 ; BL/40/41/42 ; ER/20/21/22 | E | 1895 | M43B19-E46 | A | + | | 03/98 ▸ 02/05 | 17119071519 | **734276** | 580 | 445 | ALB |
| 320Ci,320i AM/10/18 ; BM11 ; AR 10/11/18 | E | 1991 | M52B20-EU3 | M | + | | 03/98 ▸ 09/01 | 17119071518 | **734276** | 580 | 445 | ALB |
| 320Ci,320i AM/20/28 ; BM21 ; AR 20/21/28 | E | 1991 | M52B20-EU3 | A | + | | 03/98 ▸ 09/01 | 17119071519 | **734276** | 580 | 445 | ALB |
| 318Ci,318i,318ti AU/50/51/52 ; AX/50 51/52 ; AY/70/71/72 ; BP71 ; BD/91/92 ; BV 70/71/72 ; BW/71/72 | E | 1995 | M43B20,N42B/20A/20VVT | M | +/- | | 09/01 ▸ 08/05 | 17119071518 | **734276** | 580 | 445 | ALB |
| 318Ci,318i,318ti AU/60/61/62 ; AX/60 61/62 ; BD10 ; AY/80/81/82 ; BV/80/81/82 | E | 1995 | M43B20,N42B/20VVT/20A | A | +/- | | 09/01 ▸ 08/05 | 17119071519 | **734276** | 580 | 445 | ALB |
| 320Ci,320i BD/11/12 ; BS11 ; BN 11/12 ; BW/11/12 ; EN/10/11/12/18 ; ZV18 EV/10/11/12 | E | 2171 | M54B22 | M | + | | 07/00 ▸ 07/06 | 17119071518 | **734276** | 580 | 445 | ALB |
| 320Ci BS/21 ; BW/21/22 | E | 2171 | M54B22 | A | +/- | | 07/00 ▸ 07/06 | 17119071519 | **734276** | 580 | 445 | ALB |
| 323Ci,323i,325Ci,325i 325ti,325xi AM/30/32/38 ; AT/31 32 ; BD/31/32 ; BM 31/32 ; BR31 ; BS31 ; BN/31/32 ; BW/31/32 EN/30/31/32/38 ; EP/30/31/38 ; EU/30/31/38 ZV30 ; EV/30/31/32 | E | 2494 | M52B25-EU3,M54B/25/25-6S5 | M | + | | 03/98 ▸ 05/06 | 17119071518 | **734276** | 580 | 445 | ALB |
| 323Ci,325Ci BS41 ; BR/41 ; BW/41 42 | E | 2494 | M52B25-EU3,M54B25 | A | +/- | | 04/00 ▸ 08/05 | 17119071519 | **734276** | 580 | 445 | ALB |
| 328Ci,328i AM/50/52/58 ; AR/50 52/58 ; BM/51/52 | E | 2793 | M52B28-EU3 | M | + | | 03/98 ▸ 12/00 | 17119071518 | **734276** | 580 | 445 | ALB |
| 328Ci,328i AM/60/62/68 ; AR/60 62/68 ; BM/61/62 | E | 2793 | M52B28-EU3 | A | + | | 03/98 ▸ 12/00 | 17119071519 | **734276** | 580 | 445 | ALB |
| 330Ci,330i,330xi AV/50/58 ; AW/50/58 BD/51/52 ; BS51 ; BN/51/52 ; BW/51/52 ; EN 50/51/52/58 ; EP/50/51/58 ; EV/50/51/52/58 EW/50/51/58 | E | 2979 | 306S3,M54B30 | M | + | | 04/00 ▸ 08/06 | 17119071518 | **734276** | 580 | 445 | ALB |
| 330Ci BS/61 ; BW/61/62 | E | 2979 | M54B30 | A | +/- | | 07/00 ▸ 08/06 | 17119071519 | **734276** | 580 | 445 | ALB |
| 318d,320d AL/70/71/72/78 ; AX 70/72/78 ; EL/50/51 ; EU/50/51/71/72 | D | 1951 | M47D/20UL/20 | M | +/- | | 03/98 ▸ 08/05 | 17119071518 | **734276** | 580 | 445 | ALB |
| 318d,320d AX/80/81/82/88 ; EU 81/82 | D | 1951 | M47D/20UL/20 | A | +/- | | 07/99 ▸ 02/05 | 17119071518 | **734276** | 580 | 445 | ALB |
| 330d,330xd AL/90/91/98 ; AP/90 91/98 ; EL/90/98 ; EP/70/78 ; EV/90/91/98 | D | 2926 | 306D1 | M | +/- | | 09/99 ▸ 02/03 | 17119071518 | **734276** | 580 | 445 | ALB |
| 330d,330xd AP00 ; EL00 ; EP80 AL/00/01/08 ; EV/00/08 | D | 2926 | 306D1 | A | +/- | | 09/99 ▸ 02/03 | 17119071518 | **734276** | 580 | 445 | ALB |
| 330Cd,330d,330xd BV/91/92 ; ED/71/91 92 ; ER/90/91/92/98 ; EX/71/91/92 | D | 2993 | M57D/30-204/30TU | M | + | | 03/03 ▸ 05/06 | 17119071519 | **734276** | 580 | 445 | ALB |

Radiator Radiateur Motorkühler Radiatore di raffreddamento Radiator Radyatör Radiador Радиатор vízhűtő Vodní chladič Radiator Ψυγείο



• **New** Nouveau **Nuevo** Novo **Nuovo** Nieuw **Neu** Nowość **Yeni** Новый Νέο **Novy**

| Type Ctr. | | CC | | AC | | | OE | Valeo | DIM. | TECH |
|---|---|---|---|---|---|---|---|---|---|---|

# BMW (.../...)

## 3 SERIES E46 (.../...)

| | | | | | | | | | | | | |
|---|---|---|---|---|---|---|---|---|---|---|---|---|
| 330Cd,330d,330xd | BV/10 ; ED/10/81 ER/00/02/08 ; EX/10/81 | D | 2993 | M57D/30-204/30TU | A | + | | 03/03 ▸ 05/06 | 17119071519 | **734276** | 580 445 | ALB |

## 3 SERIES E90

| | | | | | | | | | | | | |
|---|---|---|---|---|---|---|---|---|---|---|---|---|
| 316i | | E | 1596 | N45B16 | M | +/- | | 03/05 ▸ 01/07 | 17117553111 | **735195** | 600 453 | ALB |
| 316i | | E | 1796 | N42B18VVT | M | +/- | | 02/06 ▸ | 17117553111 | **735195** | 600 453 | ALB |
| 318i,320i | VA/52 ; VR/51/52/71 | E | 1995 | N46B/20U1/20O1 | M | +/- | | 09/05 ▸ 08/07 | 17117553111 | **735195** | 600 453 | ALB |
| 318i | VA/61/62 ; VR/61/62 | E | 1995 | N46B20U1 | A | | | 09/05 ▸ 08/07 | 17117553111 | **735195** | 600 453 | ALB |
| 320si | VF/71/72 | E | 1997 | N45B20A | M | | | 02/06 ▸ 09/08 | 17117553111 | **735195** | 600 453 | ALB |
| 325i,325xi | VD21 ; VB/21/22 VT21 ; VS/21/22 ; WC41 ; WB/41/42 ; WN/41 42 | E | 2497 | N52B/25O0/25A | A | + | | 03/05 ▸ | 17117562079 | **735194** | 600 435 | ALB |
| 325i | VS/21/22 | E | 2497 | N52B25O0 | A | | | 09/05 ▸ 08/07 | 17117553111 | **735195** | 600 453 | ALB |
| 330i,330xi | VD/31 ; VT31 ; VS/31 32 | E | 2996 | N52B30O0 | M | + | | 09/05 ▸ | 17117562079 | **735194** | 600 435 | ALB |
| 325i,325xi,330i,330xi | VD41 ; VB/41/42 ; VE 01/41/42/61/81/82 ; VT41 ; VS/41/42 ; VV/01 41/42/61/81/82 ; WC61 ; WB/61/62/81 ; WE/41 42/61/81/82/92 ; WN/41/42/82 | E | 2996 | N52B/30O0/30A,N53B/30U0/30O0 | A | + | | 03/05 ▸ | 17117562079 | **735194** | 600 435 | ALB |
| 320d | VC31 ; VU31 | D | 1995 | M47D20TU | M | +/- | | 03/05 ▸ 08/07 | 17117790297 | **735165** | 600 338 | ALB |
| 318d,320d | GV/91/92 ; VC/11/12 31/32 ; VG/11/12 ; VU/11/12/31/32/51/52 ; VW 11/12 ; WD/11/12 ; WM/31/32 | D | 1995 | M47D/20U2,M47D20TU2,N47D/20O0,N47D/20U0 | M | + | | 03/05 ▸ | 17117788903 | **735165** | 600 338 | ALB |
| 320d | GV/91/92 ; VU/51/52 ; WD/11/12 ; WM/31/32 | D | 1995 | N47D20O0 | M | + | | 03/07 ▸ 09/08 | 17117794488 | **735165** | 600 338 | ALB |
| 320d xDrive | WC/11/12 | D | 1995 | N47D20O0 | M | | | 09/08 ▸ | 17117553111 | **735195** | 600 453 | ALB |
| 320d | VC/41/42 ; VU/41/42 | D | 1995 | M47D20TU2 | A | + | | 03/05 ▸ 08/07 | 17117790297 | **735165** | 600 338 | ALB |
| 320d | VC/41/42 ; VG/01/02 ; VU/41/42/61/62 ; WD/21 22 | D | 1995 | M47D20TU2,N47D20O0 | A | + | | 03/05 ▸ | 17117788903 | **735165** | 600 338 | ALB |
| 320d xDrive | WC/21/22 | D | 1995 | N47D20O0 | A | | | 09/08 ▸ | 17117553111 | **735195** | 600 453 | ALB |
| 325d,330d,330xd | VD91 ; VT91 ; VC/51 52/91/92 ; WC91 ; VU/71/72/91/92 ; WD/31/32 51/52 ; WN52 ; WM/51/71/72 | D | 2993 | 306D3,M57D30U2 | M | + | | 09/05 ▸ | 17117790297 | **735165** | 600 338 | ALB |
| 325d,330d,330xd,335d | VC/01/02/61/62 ; VD 01/71/72 ; VT01 ; VS/91/92 ; WC01 ; VU/01/02 81/82 ; WD/41/42/61/62/71/72 ; WM/81/82 ; WN 61/62 | D | 2993 | 306D/3/5,M57D/30U2 | A | + | | 09/05 ▸ | 17117794488 | **735165** | 600 338 | ALB |

## 3 SERIES LCI E90/E91

| | | | | | | | | | | | | |
|---|---|---|---|---|---|---|---|---|---|---|---|---|
| 1.6 i 16V | PF21 | E | 1596 | N45B16A | A | +/- | | 05/08 ▸ | 17117553111 | **735195** | 600 453 | ALB |
| 2.0 i 16V | DV/31/32 | E | 1995 | N46B20B | M | +/- | | 09/09 ▸ | 17117553111 | **735195** | 600 453 | ALB |
| 2.0 i 16V | DV/41/42 ; PF/81/82 US/61/62 | E | 1995 | N46B/20N/20B | A | +/- | | 05/08 ▸ | 17117553111 | **735195** | 600 453 | ALB |
| 2.5 i 24V | UU31 | E | 2497 | N52B25A | M | +/- | | 05/08 ▸ | 17117562079 | **735194** | 600 435 | ALB |
| 2.5 i 24V | DW/41/42 ; KF41 PG75 ; KE/22/41/42 ; PK21 ; PH/21/22 UU41 ; UT/01/02/62 | E | 2497 | N52B25A | A | +/- | | 03/08 ▸ | 17117562079 | **735194** | 600 435 | ALB |
| 3.0 i 24V | DW/61/62 ; KE/61/62 KF/61/81 ; KG/41/42/61/62 ; PM/41/42 ; UV 41/42 | E | 2996 | N52B30A,N53B/30U0/30A/30O0 | A | +/- | | 07/07 ▸ | 17117562079 | **735194** | 600 435 | ALB |
| 2.0 d 16V | PG/11/12 ; UT/31/32 | D | 1955 | N47D20C | M | +/- | | 09/09 ▸ | 17117788903 | **735165** | 600 338 | ALB |
| 2.0 d 16V | PG/21/22 ; UT/41/42 | D | 1955 | N47D20C | A | +/- | | 09/09 ▸ | 17117788903 | **735165** | 600 338 | ALB |
| 2.0 d 163 16V,2.0 d 16V | KH31 ; DY/31/32 ; KK 31/32 ; PP/11/12/31/51/52 ; PR/31/32/51/52 UY/11/12/31/51/52/71/72 | D | 1995 | N47D20C | M | +/- | | 11/08 ▸ | 17117788903 | **735165** | 600 338 | ALB |
| 2.0 d 163 16V,2.0 d 16V | KH41 ; DY/41/42 ; KK 41/42 ; PP/21/22/41 ; UY/21/22/41 | D | 1995 | N47D20C | A | +/- | | 11/08 ▸ | 17117788903 | **735165** | 600 338 | ALB |
| 3.0 d 24V | PP91 ; PN/51/52 UW91 ; PR/91/92 ; UX/51/52 ; UY/91/92 | D | 2993 | M57D30U2,N57D30A | M | + | | 09/08 ▸ | 17117794488 | **735165** | 600 338 | ALB |
| 3.0 d 24V | PP01 ; PN/61/62/71 72 ; UW01 ; PR/01/02 ; UX/61/62/71/72 ; UY 01/02 | D | 2993 | 306D5,M57D/30U2,N57D/30A | A | + | | 09/08 ▸ | 17117794488 | **735165** | 600 338 | ALB |

## 5 SERIES E12

| | | | | | | | | | | | | |
|---|---|---|---|---|---|---|---|---|---|---|---|---|
| 518,518i | 36/11/52 ; 46/12/31 | E | 1766 | 118//4,M10B/18K,M10B18V | M | +/- | TSW | 06/74 ▸ 06/81 | 17111109986 | **731520** | 441 326 | ALB |
| 518 | 36/21/61/62 | E | 1766 | 118/4 | A | +/- | | 09/74 ▸ 07/79 | 17111110866 | | 362 388 | |
| 520/4,520i | 37/11/31/51/52/72 | E | 1990 | M15E12,M17 | M | +/- | TSW | 06/72 ▸ 01/79 | 17111109986 | **731520** | 441 326 | ALB |
| 520/4 | 37/21/22/61/62 | E | 1990 | M17 | A | +/- | | 06/72 ▸ 01/79 | 17111110866 | | 362 388 | |
| 520/6 | 47/21/22 | E | 1991 | M60 | A | +/- | | 08/77 ▸ 06/81 | 17111120007 | | 575 471 | CBS |
| 525 | 38/11/12/51/52 | E | 2494 | M30B/25/25L | M | + | | 10/73 ▸ 06/81 | 17111121295 | | 575 470 | CBS |
| 525 | 38/11/12/51/52 | E | 2494 | M30B/25/25L | M | - | | 10/73 ▸ 06/81 | 17111112367 | | 576 470 | CBS |

# BMW (.../...)

## 5 SERIES E12 (.../...)

| | | | CC | | | AC | | | OE | Valeo | DIM. | | TECH |
|---|---|---|---|---|---|---|---|---|---|---|---|---|---|
| 528,528i | 39/11/12/51/52/71/72 | E | 2788 | E3,M30B28L | M | + | | 01/75 ▸ 05/81 | 17111121295 | | 575 | 470 | CBS |

## 5 SERIES E28

| | | | | | | | | | | | | | |
|---|---|---|---|---|---|---|---|---|---|---|---|---|---|
| 518,518i | 40/11/12/35/91/92 | E | 1766 | M10B/18V/18LE | M | + | | 04/81 ▸ 08/88 | 17111709336 | | 349 | 440 | CBS |
| 518,518i | 40/11/12/35 | E | 1766 | M10B/18LE/18V | M | - | | 04/81 ▸ 09/84 | 17111151700 | | 347 | 446 | ALB |
| 518i | 40/91/92 | E | 1766 | M10B18LE | M | - | | 09/84 ▸ 08/88 | 17111178084 | | 350 | 443 | CBS |
| 518i | 4093 | E | 1766 | M10B18LE | A | + | | 09/84 ▸ 08/88 | 17111709336 | | 349 | 440 | CBS |
| 518i | 4093 | E | 1766 | M10B18LE | A | - | | 09/84 ▸ 08/88 | 17111178084 | | 350 | 443 | CBS |
| 520i | 4071 ; 4872 | E | 1991 | M20B20K | M | - | | 04/81 ▸ 09/82 | 17111176187 | | 350 | 451 | CBS |
| 520i | 40/31/51/52 | E | 1991 | M20B/20K/20M1.Z7 | M | | | 09/82 ▸ 08/88 | 17111151790 | | 550 | 463 | ALB |
| 520i | 40/81/82 | E | 1991 | M20B20K | A | - | | 09/81 ▸ 09/82 | 17111176182 | | 350 | 441 | ALB |
| 520i | 40/61/82 | E | 1991 | M20B20K | A | | | 09/81 ▸ 08/84 | 17111176187 | | 350 | 451 | CBS |
| 520i | 40/61/62 | E | 1991 | M20B20K | A | | | 09/82 ▸ 08/88 | 17111151848 | | 550 | 463 | ALB |
| 525i | DA31 ; 41/31/32 | E | 2494 | M30B/25/25L | M | +/- | | 05/81 ▸ 08/88 | 17111712447 | | 575 | 470 | ALB |
| 525i | DA31 ; 41/31/32 | E | 2494 | M30B/25L/25 | M | - | TSW | 09/84 ▸ 08/88 | 17111178215 | **819414** | 551 | 326 | ALB |
| 525i | 4142 ; DA41 | E | 2494 | M30B25L | A | +/- | | 05/81 ▸ 08/88 | 17111712448 | | 575 | 459 | CBS |
| 525e | DB51 | E | 2693 | M20B27ME | M | | | 03/83 ▸ 08/84 | 17111176187 | | 350 | 451 | CBS |
| 525e | DB51 ; 42/31/32/52 | E | 2693 | M20B27ME | M | | | 03/83 ▸ 08/88 | 17111151790 | | 550 | 463 | ALB |
| 525e | 4226 ; DB61 | E | 2693 | M20B27ME | A | | | 03/83 ▸ 08/84 | 17111176182 | | 350 | 441 | ALB |
| 525e | DB61 ; 42/26/41/42 | E | 2693 | M20B27ME | A | | | 03/83 ▸ 08/88 | 17111151848 | | 550 | 463 | ALB |
| 528i | 41/71/72 | E | 2788 | M30B28LE | M | +/- | | 05/81 ▸ 08/88 | 17111712447 | | 575 | 470 | ALB |
| 528i | 41/71/72 | E | 2788 | M30B28LE | M | - | TSW | 09/84 ▸ 08/88 | 17111178215 | **819414** | 551 | 326 | ALB |
| 528i | 41/81/82 | E | 2788 | M30B28LE | A | +/- | | 06/81 ▸ 08/88 | 17111712448 | | 575 | 459 | CBS |
| 535i | DC/11/12/31/32 | E | 3430 | M30B/34M/34ME | M | + | | 01/85 ▸ 08/88 | 17111712447 | | 575 | 470 | ALB |
| M535i | DC/51/52/71/72 | E | 3430 | M30B/35M.E7/34M | M | + | | 02/85 ▸ 08/88 | 17111712447 | | 575 | 470 | ALB |
| 535i | DC/11/12/31/32 | E | 3430 | M30B/34ME/34M | M | - | | 01/85 ▸ 08/88 | 17111712445 | | 575 | 470 | ALB |
| M535i | DC/51/52/71/72 | E | 3430 | M30B/34M/35M.E7 | M | - | | 02/85 ▸ 08/88 | 17111712445 | | 575 | 470 | ALB |
| M535i | DC/61/81/82 | E | 3430 | M30B/35M.E7/34M | A | + | | 12/84 ▸ 08/88 | 17111712448 | | 575 | 459 | CBS |
| 535i | DC/21/22/41/42 | E | 3430 | M30B/34M/34ME | A | + | | 01/85 ▸ 08/88 | 17111712448 | | 575 | 459 | CBS |
| 524d,524td | 42/11/91 | D | 2443 | M21D/24W/24WA | M | +/- | | 11/82 ▸ 08/88 | 17111707508 | | 575 | 458 | ALB |
| 524td | 4221 | D | 2443 | M21D24WA | A | +/- | | 05/83 ▸ 08/87 | 17111707509 | | 575 | 458 | ALB |

## 5 SERIES E34

| | | | | | | | | | | | | | |
|---|---|---|---|---|---|---|---|---|---|---|---|---|---|
| 518i | HA/11/12/31/32 ; HG/11/12/31 | E | 1796 | M40B18,M43B18 | M | + | TSW 820220 | 09/89 ▸ 09/96 | 17111719306 | **819412** | 520 | 438 | ALB |
| 518i | HA/11/12/31/32 ; HG/11/12/31 | E | 1796 | M40B18,M43B18 | M | - | TSW | 09/89 ▸ 09/96 | 17111723537 | **730365** | 439 | 322 | ALM |
| 518i | HA/21/22/41/42 | E | 1796 | M40B18,M43B18 | A | + | TSW 820220 | 10/93 ▸ 09/95 | 17111737760 | **819412** | 520 | 438 | ALB |
| 518i | HA/21/22/41/42 | E | 1796 | M40B18,M43B18 | A | | TSW | 10/93 ▸ 09/95 | 17101728769 | **731520** | 441 | 326 | ALB |
| 520i | HB/11/12/31/32 | E | 1991 | M20B/20M1.Z7/20M0.E8 | M | + | TSW 820220 | 01/88 ▸ 07/90 | 17111719306 | **819412** | 520 | 438 | ALB |
| 520i | HB/11/12/31/32/51/52 | E | 1991 | M20B/20M0.E8/20M1.Z7,M60B/20 | M | - | TSW | 01/88 ▸ 08/91 | 17111712982 | **730365** | 439 | 322 | ALM |
| 520i | HB/51/52 | E | 1991 | M50B20 | M | - | | 03/90 ▸ 09/95 | 17111737757 | | | | |
| 520i | HB/51/52 ; HG/51/52 | E | 1991 | M50B20 | M | - | TSW 820220 | 09/91 ▸ 09/96 | 17111723941 | **732456** | 520 | 329 | ALB |
| 520i | HB/21/41 | E | 1991 | M20B/20M0.E8/20M1.Z7 | A | +/- | TSW 820220 | 01/88 ▸ 06/88 | 17111719309 | **819413** | 520 | 438 | ALB |
| 520i | HB/21/22/41/42 | E | 1991 | M20B/20M0.E8/20M1.Z7 | A | +/- | TSW | 01/88 ▸ 07/90 | 17101728769 | **731520** | 441 | 326 | ALB |
| 520i | HB/61/62 | E | 1991 | M50B20 | A | + | TSW 820220 | 09/92 ▸ 09/95 | 17111737760 | **819412** | 520 | 438 | ALB |
| 520i | HB/61/62 | E | 1991 | M50B20 | A | - | | 09/92 ▸ 09/95 | 17111737757 | | | | |
| 525i,525iX | HD/51/52/71/72 ; HJ 51/52/71/72 | E | 2494 | M50B25 | M | + | TSW 820220 | 03/90 ▸ 09/96 | 17111737760 | **819412** | 520 | 438 | ALB |
| 525i,525iX | HC/11/12/13 ; HD/51 52/71/72 ; HJ/51/52/71/72 | E | 2494 | M20B25,M50B25 | M | - | TSW | 02/88 ▸ 09/96 | 17111712982 | **730365** | 439 | 322 | ALM |
| 525i,525iX | HD/51/52/71/72 | E | 2494 | M50B25 | M | - | | 03/90 ▸ 09/95 | 17111737757 | | | | |
| 525i,525iX | HC/21/22/23 ; HD/61 62/81/82 ; HJ/61/62/81/82 | E | 2494 | M20B25,M50B25 | A | +/- | TSW 820220 | 06/88 ▸ 09/96 | 17111719309 | **819413** | 520 | 438 | ALB |
| 525i,525iX | HD/61/62/81/82 | E | 2494 | M50B25 | A | + | TSW 820220 | 09/92 ▸ 09/95 | 17111737760 | **819412** | 520 | 438 | ALB |
| 525i,525iX | HD/61/62/81/82 | E | 2494 | M50B25 | A | - | | 09/92 ▸ 09/95 | 17111737757 | | | | |
| 525i,525iX | HC/21/22/23 ; HD/61 62/81/82 | E | 2494 | M20B25,M50B25 | A | +/- | TSW | 06/88 ▸ 08/92 | 17111719305 | **731520** | 441 | 326 | ALB |
| 530i | HC/51/52 | E | 2986 | M30B30M.E7 | M | + | TSW 820220 | 01/88 ▸ 04/90 | 17111723689 | **734615** | 610 | 438 | ALB |
| 530i | HC/51/52 | E | 2986 | M30B30M.E7 | M | - | TSW | 01/88 ▸ 04/90 | 17111712007 | **819414** | 551 | 326 | ALB |
| 530i | HC/61/62 | E | 2986 | M30B30M.E7 | A | + | | 01/88 ▸ 06/90 | 17111723467 | | 610 | 438 | CBS |
| 530i | HE/11/12 ; HK/11/12 | E | 2997 | M60B30 | M | +/- | TSW 820220 | 06/94 ▸ 09/96 | 17111702453 | **731523** | 650 | 435 | ALB |
| 530i | HE/11/12 ; HK/11/12 | E | 2997 | M60B30 | M | + | TSW 820220 | 09/92 ▸ 06/94 | 17112242138 | **819418** | 648 | 435 | ALB |
| 530i | HE/21/22 ; HK/21/22 | E | 2997 | M60B30 | A | +/- | TSW 820220 | 06/94 ▸ 09/96 | 17111702453 | **731523** | 650 | 435 | ALB |
| 530i | HE/21/22 ; HK/21/22 | E | 2997 | M60B30 | A | + | TSW 820220 | 09/92 ▸ 09/93 | 17111723398 | **732099** | 650 | 435 | ALB |
| 535i | HD/11/12/13 | E | 3430 | M30B/35M7/34M | M | + | TSW 820220 | 01/88 ▸ 04/93 | 17111723689 | **734615** | 610 | 438 | ALB |
| 535i | HD/11/12/13 | E | 3430 | M30B/35M7/34M | M | - | TSW | 01/88 ▸ 04/93 | 17111712007 | **819414** | 551 | 326 | ALB |
| 535i | HD/21/22/23 | E | 3430 | M30B/35M7/34M | A | + | | 01/88 ▸ 04/93 | 17111723467 | | 610 | 438 | CBS |
| 540i | HE/51/52 ; HK/31/32 | E | 3982 | M60B40 | M | +/- | TSW 820220 | 07/93 ▸ 09/96 | 17111702453 | **731523** | 650 | 435 | ALB |
| 540i | HE/51/52 ; HK/31/32 | E | 3982 | M60B40 | M | + | TSW 820220 | 07/93 ▸ 09/96 | 17112242138 | **819418** | 648 | 435 | ALB |
| 540i | HE/61/62 ; HK/41/42 | E | 3982 | M60B40 | A | +/- | TSW 820220 | 09/92 ▸ 09/96 | 17111702453 | **731523** | 650 | 435 | ALB |
| 540i | HE/61/62 ; HK/41/42 | E | 3982 | M60B40 | A | + | TSW 820220 | 09/92 ▸ 09/96 | 17112242138 | **819418** | 648 | 435 | ALB |

Radiator Radiateur Motorkühler Radiatore di raffreddamento Radiator Radyatör Радиатор Radiador vízhűtő Vodní chladič Radiator Ψυγείο



• **New** Nouveau **Nuevo** Novo **Nuovo** Nieuw **Neu** Nowość **Yeni** Новый Νέο **Nový**

# BMW (.../...)

## 5 SERIES E34 (.../...)

| | | | CC | | | AC | | | OE | Valeo | DIM. | | TECH |
|---|---|---|---|---|---|---|---|---|---|---|---|---|---|
| 524td | HA51 | D | 2443 | M21D24WA | M | +/- | TSW 820220 | 03/88 ▸ 08/91 | 17112242138 | **819418** | 648 | 435 | ALB |
| 524td | HA61 | D | 2443 | M21D24WA | A | +/- | TSW 820220 | 03/88 ▸ 08/91 | 17111712267 | **732099** | 650 | 435 | ALB |
| 525tds | HA/91/92 ; HG/71/72 | D | 2497 | M51D25 | M | +/- | TSW 820220 | 08/91 ▸ 09/96 | 17112244542 | **732593** | 650 | 428 | ALB |
| 525td | HG91 ; HA/71/72 | D | 2497 | M51A | M | +/- | TSW 820220 | 02/93 ▸ 09/96 | 17112243445 | **819418** | 648 | 435 | ALB |
| 525tds | HA/01/02 ; HG/81/82 | D | 2497 | M51D25 | A | +/- | TSW 820220 | 08/91 ▸ 09/96 | 17112244543 | **734421** | 650 | 428 | ALB |
| 525td | HG01 ; HA/81/82 | D | 2497 | M51A | A | +/- | TSW 820220 | 02/93 ▸ 09/96 | 17112243445 | **819418** | 648 | 435 | ALB |

## 5 SERIES E39

| | | | | | | | | | | | | | |
|---|---|---|---|---|---|---|---|---|---|---|---|---|---|
| 520i | DD/11/12 | E | 1991 | M52B20 | M | + | TSW | 07/96 ▸ 09/98 | 17111740699 | **734301** | 520 | 439 | ALB |
| 520i | DD/11/12 ; DH/11/12 | E | 1991 | M52B20 | M | + | | 07/96 ▸ 09/98 | 17111702969 | | 650 | 439 | ALB |
| 520i | DD/11/12 ; DH/11/12 ; DM/10/11 ; DR/10/11 | E | 1991 | M52B/20/20-EU3 | M | + | TSW | 09/98 ▸ 04/04 | 17111436060 | **734277** | 650 | 438 | ALB |
| 520i | DD/11/12 ; DH/11/12 | E | 1991 | M52B20 | M | - | TSW | 07/96 ▸ 09/98 | 17111427153 | **734301** | 520 | 439 | ALB |
| 520i | DD/11/12 ; DH/11/12 | E | 1991 | M52B20 | M | - | TSW | 10/96 ▸ 09/98 | 17101432819 | **734301** | 520 | 439 | ALB |
| 520i | DD/11/12 | E | 1991 | M52B20 | M | | TSW 820316 | 07/96 ▸ 10/96 | 17111740698 | **731725** | 520 | 445 | ALB |
| 520i | DH/11/12 | E | 1991 | M52B20 | M | | TSW | 01/97 ▸ 09/98 | 17111740699 | **734301** | 520 | 439 | ALB |
| 520i | DD/21/22 ; DH/21/22 | E | 1991 | M52B20 | A | + | | 07/96 ▸ 09/98 | 17111702969 | | 650 | 439 | ALB |
| 520i | DD/21/22 | E | 1991 | M52B20 | A | + | TSW | 07/96 ▸ 09/98 | 17111740699 | **734301** | 520 | 439 | ALB |
| 520i | DD/21/22 ; DH/21/22 ; DM/20/21 ; DR/20/21 | E | 1991 | M52B/20-EU3/20 | A | + | TSW | 09/98 ▸ 04/04 | 17111436060 | **734277** | 650 | 438 | ALB |
| 520i | DD/21/22 ; DH/21/22 | E | 1991 | M52B20 | A | - | TSW | 07/96 ▸ 09/98 | 17111427153 | **734301** | 520 | 439 | ALB |
| 520i | DH/21/22 | E | 1991 | M52B20 | A | | TSW | 01/97 ▸ 09/98 | 17111740699 | **734301** | 520 | 439 | ALB |
| 520i | DS/10/11 ; DT/11/21 | E | 2171 | M54B22 | M | + | TSW | 07/00 ▸ 04/04 | 17111436060 | **734277** | 650 | 438 | ALB |
| 520i | DS/20/21 ; DT/10/20 | E | 2171 | M54B22 | A | + | TSW | 07/00 ▸ 04/04 | 17111436060 | **734277** | 650 | 438 | ALB |
| 523i | DD/31/32 | E | 2494 | M52B25 | M | + | TSW | 09/95 ▸ 09/98 | 17111740699 | **734301** | 520 | 439 | ALB |
| 523i | DD/31/32 ; DH/31/32 | E | 2494 | M52B25 | M | + | | 09/95 ▸ 09/98 | 17111702969 | | 650 | 439 | ALB |
| 523i,525i | DD/31/32 ; DH/31/32 DM/30/31 ; DR/30/31 ; DT30 ; ZT38 ; DS/30 38 | E | 2494 | M52B/25-EU3,M52B25,M54B/25 | M | + | TSW | 09/98 ▸ 04/04 | 17111436060 | **734277** | 650 | 438 | ALB |
| 523i | DD/31/32 ; DH/31/32 | E | 2494 | M52B25 | M | - | TSW | 09/95 ▸ 09/98 | 17111427153 | **734301** | 520 | 439 | ALB |
| 523i | DD/31/32 ; DH/31/32 | E | 2494 | M52B25 | M | - | TSW | 10/96 ▸ 09/98 | 17101432819 | **734301** | 520 | 439 | ALB |
| 523i | DD/31/32 | E | 2494 | M52B25 | M | | TSW 820316 | 09/95 ▸ 10/96 | 17111740698 | **731725** | 520 | 445 | ALB |
| 523i | DH/31/32 | E | 2494 | M52B25 | M | | TSW | 01/97 ▸ 09/98 | 17111740699 | **734301** | 520 | 439 | ALB |
| 523i | DD/41/42 ; DH/41/42 | E | 2494 | M52B25 | A | + | | 10/95 ▸ 09/98 | 17111702969 | | 650 | 439 | ALB |
| 523i | DD/41/42 | E | 2494 | M52B25 | A | + | TSW | 10/95 ▸ 09/98 | 17111740699 | **734301** | 520 | 439 | ALB |
| 523i,525i | DD/41/42 ; DH/41/42 DM/40/41 ; DR/40/41 ; DT40 ; ZT48 ; DS/40 48 | E | 2494 | M52B/25-EU3/25,M54B25 | A | + | TSW | 09/98 ▸ 04/04 | 17111436060 | **734277** | 650 | 438 | ALB |
| 523i | DD/41/42 ; DH/41/42 | E | 2494 | M52B25 | A | - | TSW | 10/95 ▸ 09/98 | 17111427153 | **734301** | 520 | 439 | ALB |
| 523i | DH/41/42 | E | 2494 | M52B25 | A | | TSW | 01/97 ▸ 09/98 | 17111740699 | **734301** | 520 | 439 | ALB |
| 523i | DD/41/42 ; DH/41/42 ; DM/40/41 ; DR/40/41 | E | 2494 | M52B/25-EU3/25 | A | | TSW | 09/98 ▸ 04/04 | 17111436063 | **735233** | 650 | 435 | ALB |
| 523i | DD/41/42 ; DH/41/42 ; DM/40/41 ; DR/40/41 | E | 2494 | M52B/25-EU3/25 | A | | TSW | 09/98 ▸ 04/04 | 17111436063 | **735223** | 650 | 435 | ALB |
| 528i | DD/51/52 | E | 2793 | M52B28 | M | + | TSW | 09/95 ▸ 09/98 | 17111740699 | **734301** | 520 | 439 | ALB |
| 528i | DD/51/52 ; DH/51/52 | E | 2793 | M52B28 | M | + | | 09/95 ▸ 09/98 | 17111702969 | | 650 | 439 | ALB |
| 528i | DD/51/52 ; DH/51/52 ; DM/51/58 ; DP/50/58 | E | 2793 | M52B/28-EU3/28 | M | + | TSW | 09/98 ▸ 04/04 | 17111436060 | **734277** | 650 | 438 | ALB |
| 528i | DD/51/52 ; DH/51/52 | E | 2793 | M52B28 | M | - | TSW | 09/95 ▸ 09/98 | 17111427153 | **734301** | 520 | 439 | ALB |
| 528i | DD/51/52 ; DH/51/52 | E | 2793 | M52B28 | M | - | TSW | 10/96 ▸ 09/98 | 17101432819 | **734301** | 520 | 439 | ALB |
| 528i | DD/51/52 | E | 2793 | M52B28 | M | | TSW 820316 | 09/95 ▸ 10/96 | 17111740698 | **731725** | 520 | 445 | ALB |
| 528i | DH/51/52 | E | 2793 | M52B28 | M | | TSW | 01/97 ▸ 09/98 | 17111740699 | **734301** | 520 | 439 | ALB |
| 528i | DD/60/61/62 | E | 2793 | M52B28 | A | + | TSW | 09/95 ▸ 09/98 | 17111740699 | **734301** | 520 | 439 | ALB |
| 528i | DD/60/61/62 ; DH/61/62 | E | 2793 | M52B28 | A | + | | 09/95 ▸ 09/98 | 17111702969 | | 650 | 439 | ALB |
| 528i | DD/60/61/62 ; DH/61/62 ; DM/61/68 ; DP/60/68 | E | 2793 | M52B/28-EU3/28 | A | + | TSW | 09/98 ▸ 04/04 | 17111436060 | **734277** | 650 | 438 | ALB |
| 528i | DD/60/61/62 ; DH/61/62 | E | 2793 | M52B28 | A | - | TSW | 09/95 ▸ 09/98 | 17111427153 | **734301** | 520 | 439 | ALB |
| 528i | DH/61/62 | E | 2793 | M52B28 | A | | TSW | 01/97 ▸ 09/98 | 17111740699 | **734301** | 520 | 439 | ALB |
| 530i | DT50 ; ZT58 ; DS/50/58 | E | 2979 | 306S3 | M | + | TSW | 07/00 ▸ 04/04 | 17111436060 | **734277** | 650 | 438 | ALB |
| 530i | DT60 ; ZT68 ; DS/60/68 | E | 2979 | 306S3 | A | + | TSW | 07/00 ▸ 04/04 | 17111436060 | **734277** | 650 | 438 | ALB |
| 535i | DE/11/12 | E | 3498 | M62B35 | M | + | | 07/96 ▸ 09/98 | 17111702969 | | 650 | 439 | ALB |
| 535i | DN11 ; DE/11/12 | E | 3498 | M62B/35/35-245 | M | + | TSW | 09/98 ▸ 04/03 | 17111436060 | **734277** | 650 | 438 | ALB |
| 535i | DE/21/22 | E | 3498 | M62B35 | A | + | | 07/96 ▸ 09/98 | 17111702969 | | 650 | 439 | ALB |
| 535i | DN21 ; DE/21/22 | E | 3498 | M62B/35/35-245 | A | + | TSW | 09/98 ▸ 04/03 | 17111436061 | **734277** | 650 | 438 | ALB |
| 535i | DN21 ; DE/21/22 | E | 3498 | M62B/35/35-245 | A | | TSW | 09/98 ▸ 04/03 | 17111436063 | **735233** | 650 | 435 | ALB |
| 535i | DN21 ; DE/21/22 | E | 3498 | M62B/35/35-245 | A | | TSW | 09/98 ▸ 04/03 | 17111436063 | **735223** | 650 | 435 | ALB |
| 540i | DE/51/52 ; DJ/51/52 | E | 4398 | 448S1 | M | + | | 07/96 ▸ 09/98 | 17111702969 | | 650 | 439 | ALB |
| 540i | DE/51/52 ; DN51 ; DR51 ; DJ/51/52 | E | 4398 | 448S/1/2 | M | + | TSW | 09/98 ▸ 04/04 | 17111436060 | **734277** | 650 | 438 | ALB |
| 540i | DE/61/62 ; DJ/61/62 | E | 4398 | 448S1 | A | + | | 07/96 ▸ 09/98 | 17111702969 | | 650 | 439 | ALB |
| 540i | DE/61/62 ; DJ/61/62 ; DR61 ; DN/61/81 | E | 4398 | 448S/1/2 | A | + | TSW | 09/98 ▸ 04/04 | 17111436060 | **734277** | 650 | 438 | ALB |
| 540i | DE/61/62 ; DJ/61/62 ; DR61 ; DN/61/81 | E | 4398 | 448S/1/2 | A | | TSW | 09/98 ▸ 04/04 | 17111436063 | **735233** | 650 | 435 | ALB |
| 540i | DE/61/62 ; DJ/61/62 ; DR61 ; DN/61/81 | E | 4398 | 448S/2/1 | A | | TSW | 09/98 ▸ 04/04 | 17111436063 | **735223** | 650 | 435 | ALB |
| 520d | DM/70/71 ; DR/70/71 | D | 1951 | M47D20 | M | + | | 01/00 ▸ 04/04 | 17112247345 | **734394** | 650 | 328 | ALB |
| 525Td,525Tds | DF/50/51/70/71/72 78 ; DG/70/71/78 ; DJ/71/72 | D | 2497 | M51D25 | M | +/- | TSW 820316 | 10/95 ▸ 04/04 | 17112246012 | **731766** | 650 | 438 | ALB |
| 525d | DL/90/91/98 ; DP/90/91/98 | D | 2497 | M57D25 | M | + | | 01/00 ▸ 04/04 | 17112247345 | **734394** | 650 | 328 | ALB |

# BMW (.../...)

| Type Ctr. | | CC | | AC | | | OE | Valeo | DIM. | TECH |
|---|---|---|---|---|---|---|---|---|---|---|
| **5 SERIES E39 (.../...)** | | | | | | | | | | |
| 525d DL/00/01/08 ; DP/00/01/08 | D | 2497 | M57D25 | A | + | | 01/00 ▸ 04/04 | 17112247345 | **734394** | 650 328 | ALB |
| 525Tds DF/80/81/82/88 ; DG 80/81/88 ; DJ/81/82 | D | 2497 | M51D25 | A | - | TSW 820316 | 10/95 ▸ 04/04 | 17112246012 | **731766** | 650 438 | ALB |
| 530d DL/70/71/72/78 ; DP//70/71/72/78 | D | 2926 | 306D1,M57D30-193 | M | + | | 09/98 ▸ 04/04 | 17112247345 | **734394** | 650 328 | ALB |
| 530d DL/80/81/82/88 ; DP//80/81/82/88 | D | 2926 | 306D1,M57D30-193 | A | + | | 09/98 ▸ 04/04 | 17112247345 | **734394** | 650 328 | ALB |
| **5 SERIES E60** | | | | | | | | | | |
| 520i NA/31/32 | E | 2171 | M54B22 | M | | | 05/03 ▸ 03/05 | 17117519212 | **734898** | 623 486 | ALB |
| 520i NA/41/42 | E | 2171 | M54B22 | A | + | | 05/03 ▸ 03/05 | 17117519209 | **734897** | 623 486 | ALB |
| 525i NA/51/52 ; NG/51/52 | E | 2494 | M54B25-6S5 | M | | | 09/03 ▸ 02/05 | 17117519212 | **734898** | 623 486 | ALB |
| 525i NA/61/62 ; NG/61/62 | E | 2494 | M54B25-6S5 | A | + | | 09/03 ▸ 02/05 | 17117519209 | **734897** | 623 486 | ALB |
| 525i NG/61/62 | E | 2494 | M54B25-6S5 | A | | | 05/04 ▸ 02/05 | 17117519212 | **734898** | 623 486 | ALB |
| 523i,525i,525xi NF31 ; NE/31/51 NN51 ; NL/31/51 | E | 2497 | N52B/25UL/25OO | M | + | | 03/05 ▸ 12/06 | 17117534915 | •**735477** | 623 483 | ALB |
| 523i,525i,525xi NF41 ; NE/41/61 NN61 ; NL/41/61 | E | 2497 | N52B/25UL/25OO | A | + | | 03/05 ▸ 12/06 | 17117534914 | •**735476** | 623 483 | ALB |
| 530i NA/71/72 | E | 2979 | 306S3 | M | | | 05/03 ▸ 02/05 | 17117519212 | **734898** | 623 486 | ALB |
| 530i NA/81/82 | E | 2979 | 306S3 | A | + | | 05/03 ▸ 02/05 | 17117519209 | **734897** | 623 486 | ALB |
| 530i,530xi NF71 ; NL71 ; NN71 NE/71 | E | 2996 | N52B30OO | M | + | | 03/05 ▸ 12/06 | 17117534915 | •**735477** | 623 483 | ALB |
| 530i,530xi NF81 ; NL81 ; NN81 NE/81 | E | 2996 | N52B30OO | A | + | | 03/05 ▸ 12/06 | 17117534914 | •**735476** | 623 483 | ALB |
| 540i NB21 | E | 4000 | N62B40TU | A | + | | 09/05 ▸ 12/06 | 17117519209 | **734897** | 623 486 | ALB |
| 545i NB32 ; NH32 | E | 4398 | N62B44VVT | M | | | 05/03 ▸ 09/05 | 17117507972 | **734396** | 620 490 | ALB |
| 545i NB/41/42 | E | 4398 | N62B44VVT | A | + | | 05/03 ▸ 09/03 | 17117519209 | **734897** | 623 486 | ALB |
| 545i NB/41/42 ; NH/41/42 | E | 4398 | N62B44VVT | A | + | | 05/03 ▸ 09/05 | 17117507972 | **734396** | 620 490 | ALB |
| 550i NB61 ; NH61 | E | 4799 | N62B48TU | A | + | | 09/05 ▸ 12/06 | 17117519209 | **734897** | 623 486 | ALB |
| 520d NC31 ; NJ31 | D | 1995 | M47D20TU2 | M | + | | 09/05 ▸ 12/06 | 17117794836 | **735036** | 623 378 | ALB |
| 520d NC41 ; NJ41 | D | 1995 | M47D20TU2 | A | + | | 09/05 ▸ 12/06 | 17117795878 | •**735475** | 623 375 | ALB |
| 525d NC51 ; NJ51 | D | 2497 | M57D25TU | M | + | | 05/03 ▸ 12/06 | 17117794836 | **735036** | 623 378 | ALB |
| 525d NC61 ; NJ61 | D | 2497 | M57D25TU | A | + | | 05/03 ▸ 12/06 | 17117792832 | **735034** | 623 378 | ALB |
| 525d NC61 | D | 2497 | M57D25TU | A | | | 05/03 ▸ 03/04 | 17112248478 | **734395** | 600 380 | ALB |
| 530d NC/71/72 | D | 2993 | 306D2 | M | + | | 05/03 ▸ 09/05 | 17112248478 | **734395** | 600 380 | ALB |
| 530d,530xd NJ71 ; NM71 ; NP71 NC/71/72 ; NS71 ; NR/71/72 | D | 2993 | 306D/3/2 | M | + | | 05/03 ▸ 12/06 | 17117794836 | **735036** | 623 378 | ALB |
| 530d,535d NA/82 ; NC/81/82/91 NV81 ; NJ/81/91 | D | 2993 | 306D2,M57D30TU | A | + | | 05/03 ▸ 12/06 | 17117792832 | **735034** | 623 378 | ALB |
| 530d NA/82 ; NJ81 ; NV81 ; NC/81/82 | D | 2993 | 306D2 | A | + | | 05/03 ▸ 12/06 | 17112248478 | **734395** | 600 380 | ALB |
| 530d,530xd NP81 ; NM/81 ; NS81 NR/81/82 | D | 2993 | 306D3 | A | + | | 09/05 ▸ 12/06 | 17117795878 | •**735475** | 623 375 | ALB |
| **5 SERIES E60/61 LCI** | | | | | | | | | | |
| 2.0 i 16V NT/31/32 ; PT/11/12 | E | 1995 | N43B20OO | M | + | | 09/07 ▸ | 17117534915 | •**735477** | 623 483 | ALB |
| 2.0 i 16V NT/41/42 ; PT/21/22 | E | 1995 | N43B20OO | A | + | | 09/07 ▸ | 17117534914 | •**735476** | 623 483 | ALB |
| 2.5 i 24V NU31 ; PU31 | E | 2497 | N53B25U0 | M | | | 01/07 ▸ | 17117519212 | **734898** | 623 486 | ALB |
| 2.5 i 24V NU32 ; PU32 | E | 2497 | N53B25U0 | M | + | | 01/07 ▸ | 17117534915 | •**735477** | 623 483 | ALB |
| 2.5 i 24V NU/41/42 ; PU/41/42 | E | 2497 | N53B25U0 | A | + | | 01/07 ▸ | 17117534914 | •**735476** | 623 483 | ALB |
| 2.5 i 24V NU41 ; PU41 | E | 2497 | N53B25U0 | A | | | 01/07 ▸ | 17117519212 | **734898** | 623 486 | ALB |
| 3.0 i 24V ND/71 ; NU71 ; NK/71 72 ; PU71 ; NV/31/71 ; PV/31/71 | E | 2996 | N53B/30OO/30U0 | M | | | 01/07 ▸ | 17117519212 | **734898** | 623 486 | ALB |
| 3.0 i 24V NK72 ; NU72 ; ND/72 PU72 ; NV/31/71 ; PV/31/71 | E | 2996 | N53B/30OO/30U0 | M | + | | 01/07 ▸ | 17117534915 | •**735477** | 623 483 | ALB |
| 3.0 i 24V ND/81/82 ; NK/81/82 NU/81/82 ; NV/41/81 ; PU/81/82 ; PV/41/81 | E | 2996 | N53B/30OO/30U0 | A | + | | 01/07 ▸ | 17117534914 | •**735476** | 623 483 | ALB |
| 4.0 i V8 32V NW/41/42 | E | 4000 | N62B40O1 | A | | | 01/07 ▸ | 17117519209 | **734897** | 623 486 | ALB |
| 4.8 i V8 32V NW/61/62 ; PW/61/62 | E | 4799 | N62B48O1 | A | | | 01/07 ▸ | 17117519209 | **734897** | 623 486 | ALB |
| 2.0 d 16V NX/11/12/31/32 ; PX 11/12/31/32 | D | 1995 | M47D20O2,N47D20OO | M | | | 01/07 ▸ | 17117794836 | **735036** | 623 378 | ALB |
| 2.0 d 16V NX/41/42 ; PX/41/42 | D | 1995 | N47D20OO | A | + | | 09/07 ▸ | 17117795878 | •**735475** | 623 375 | ALB |
| 3.0 d 24V NX/61/62/81/82/91 92 ; NY/61/62/81 ; PX/61/62/81/82/91/92 ; PY 61/81 | D | 2993 | 306D5,M57D/30U2,M57N/2 | A | + | | 01/07 ▸ | 17117795878 | •**735475** | 623 375 | ALB |
| **5 SERIES F10/F11** | | | | | | | | | | |
| 2.5 i 24V FP31/32 | E | 2497 | N52B25A | A | +/- | | 02/09 ▸ | 17117603745 | •**735278** | 486 614 | ALB |
| 3.0 i 24V FS21/22 ;FR11/12 FS61/62 | E | 2996 | N53B30A | A | +/- | | 02/09 ▸ | 17117612954 | •**735278** | 486 614 | ALB |
| **6 SERIES E63** | | | | | | | | | | |
| 550i 4.4 V8 32V EH/31/32 | E | 2996 | N52B30OO | M | + | | 09/04 ▸ 08/07 | 17117534915 | •**735477** | 623 483 | ALB |

Radiator Ψυγείο Vodní chladič Радиатор vízhűtő Radiador Radiator Radyatör Radiator Radiatore di raffreddamento Motorkühler Radiateur Radiator



• **New** Nouveau **Nuevo** Novo **Nuovo** Nieuw **Neu** Nowość **Yeni** Новый Νέο **Novy**

# BMW (.../...)

## 6 SERIES E63 (.../...)

| | | | | | | | | | | | | | |
|---|---|---|---|---|---|---|---|---|---|---|---|---|---|
| 630i | EH/41/42 | E | 2996 | N52B3000 | A | + | | 09/04 ▸ 08/07 | 17117534914 | •735476 | 623 | 483 | ALB |
| 645Ci | EH71 | E | 4398 | N62B44VVT | M | | | 09/03 ▸ 08/07 | 17117507972 | 734396 | 620 | 490 | ALB |
| 645Ci | EH81 | E | 4398 | N62B44VVT | A | | | 09/03 ▸ 08/07 | 17117507972 | 734396 | 620 | 490 | ALB |
| 650i | EH/21/22 | E | 4799 | N62B48TU | A | | | 03/05 ▸ 08-juil | 17117519209 | 734897 | 623 | 486 | ALB |

## 6 SERIES E63/E64

| | | | | | | | | | | | | | |
|---|---|---|---|---|---|---|---|---|---|---|---|---|---|
| 3.0 i 24V | EA/31/32 ; EB/31/32 | E | 2996 | N53B3000 | M | + | | 09/07 ▸ | 17117534915 | •735477 | 623 | 483 | ALB |
| 3.0 i 24V | EA31 ; EB31 | E | 2996 | N53B3000 | M | | | 09/07 ▸ | 17117519212 | 734898 | 623 | 486 | ALB |
| 3.0 i 24V | EA/41/42 ; EB/41/42 | E | 2996 | N53B3000 | A | + | | 09/07 ▸ | 17117534914 | •735476 | 623 | 483 | ALB |
| 4.8 i V8 32V | EA/61/62 ; EB/61/62 | E | 4799 | N62B4801 | A | + | | 09/07 ▸ | 17117519209 | 734897 | 623 | 486 | ALB |
| 4.8 i V8 32V | EA61 | E | 4799 | N62B4801 | A | + | | 09/07 ▸ | 17117534914 | •735476 | 623 | 483 | ALB |
| 3.0 24V | EA/71/72 ; EB/71/72 | D | 2993 | 306D5 | A | + | | 09/07 ▸ | 17117795878 | •735475 | 623 | 375 | ALB |

## 6 SERIES E64

| | | | | | | | | | | | | | |
|---|---|---|---|---|---|---|---|---|---|---|---|---|---|
| 630i | EK/31/32 | E | 2996 | N52B3000 | M | + | | 09/04 ▸ 08/07 | 17117534915 | •735477 | 623 | 483 | ALB |
| 630i | EK/41/42 | E | 2996 | N52B3000 | A | + | | 09/04 ▸ 08/07 | 17117534914 | •735476 | 623 | 483 | ALB |
| 645Ci | EK71 | E | 4398 | N62B44VVT | M | | | 03/04 ▸ 08/07 | 17117507972 | 734396 | 620 | 490 | ALB |
| 645Ci | EK81 | E | 4398 | N62B44VVT | A | | | 03/04 ▸ 08/07 | 17117507972 | 734396 | 620 | 490 | ALB |
| 650i | EK/21/22 | E | 4799 | N62B48TU | A | | | 03/05 ▸ 08/07 | 17117519209 | 734897 | 623 | 486 | ALB |

## 7 SERIES E23

| | | | | | | | | | | | | | |
|---|---|---|---|---|---|---|---|---|---|---|---|---|---|
| 728iS | 64/41/81 | E | 2494 | M30B25L | A | +/- | | 11/81 ▸ 04/86 | 17111153064 | | 609 | 459 | CBS |
| 728,728i | 65/21/22/41/42/81/82 | E | 2788 | M128,M30B28LE | A | +/- | | 04/77 ▸ 05/86 | 17111153064 | | 609 | 459 | CBS |
| 730 | 66/21/22 | E | 2986 | M30B30 | A | +/- | | 07/77 ▸ 08/79 | 17111153064 | | 609 | 459 | CBS |
| 732i,733i | 66/41/42/44/47/49/81 82/84/89 ; 67/41/42/45/46 | E | 3210 | M30B/32M/32L | A | +/- | | 03/77 ▸ 05/86 | 17111153064 | | 609 | 459 | CBS |
| 745i | 69/41/81 | E | 3210 | M30B32LA | A | | | 01/80 ▸ 04/83 | 17111153064 | | 609 | 459 | CBS |
| 735i | 6882 ; FH81 | E | 3430 | M30B34M | A | +/- | | 11/82 ▸ 05/86 | 17111153064 | | 609 | 459 | CBS |
| 735i | 6861 ; FG81 ; 67/21 | E | 3430 | M30B/34M/35M.E7 | A | | | 09/82 ▸ 05/86 | 17111153064 | | 609 | 459 | CBS |
| 735i | 68/41/42 | E | 3453 | M30B35L | A | +/- | | 09/79 ▸ 09/82 | 17111153064 | | 609 | 459 | CBS |

## 7 SERIES E32

| | | | | | | | | | | | | | |
|---|---|---|---|---|---|---|---|---|---|---|---|---|---|
| 730i | GA/31/32/71/72 ; GC/21/22 | E | 2986 | M30B/30M.E7/30M | M | + | TSW 820220 | 09/86 ▸ 03/94 | 17111723689 | 734615 | 610 | 438 | ALB |
| 730i | GA/31/32/72 ; GC/21/22 | E | 2986 | M30B/30M.E7/30M | M | + | TSW | 09/86 ▸ 03/94 | 17111712007 | 819414 | 551 | 326 | ALB |
| 730i | GA/31/32/71/72 ; GC/21/22 | E | 2986 | M30B/30M.E7/30M | M | - | | 09/86 ▸ 03/94 | 17111712005 | | 470 | 328 | ALB |
| 730i | GA71 | E | 2986 | M30B30M.E7 | M | | TSW | 01/87 ▸ 03/94 | 17111712007 | 819414 | 551 | 326 | ALB |
| 730i | GA/41/42/81/82 | E | 2986 | M30B/30M/30M.E7 | A | + | | 09/86 ▸ 03/94 | 17111723467 | | 610 | 438 | CBS |
| 730i | GA82 | E | 2986 | M30B30M.E7 | A | + | TSW 820220 | 08/88 ▸ 02/94 | 17111723689 | 734615 | 610 | 438 | ALB |
| 730i | GA82 | E | 2986 | M30B30M.E7 | A | | TSW | 08/88 ▸ 02/94 | 17111712007 | 819414 | 551 | 326 | ALB |
| 730i | GD/11/51 | E | 2997 | M60B30 | M | + | TSW 820220 | 04/92 ▸ 05/94 | 17112242138 | 819418 | 648 | 435 | ALB |
| 730i | GD/21/22/61/62 | E | 2997 | M60B30 | A | + | TSW 820220 | 04/92 ▸ 05/94 | 17111723398 | 732099 | 650 | 435 | ALB |
| 735i | GB/31/32/33/51/52 ; GC/31/51/52 | E | 3430 | M30B/35/34M/35M.E7 | M | + | TSW | 09/86 ▸ 06/92 | 17111712007 | 819414 | 551 | 326 | ALB |
| 735i | GB/32/33/51/52 ; GC/31/52 | E | 3430 | M30B/35M.E7/34M/35 | M | + | TSW 820220 | 09/86 ▸ 02/92 | 17111723689 | 734615 | 610 | 438 | ALB |
| 735i | GB/31/32/33/51/52 ; GC/31/51/52 | E | 3430 | M30B/34M/35/35M.E7 | M | - | | 09/86 ▸ 06/92 | 17111712005 | | 470 | 328 | ALB |
| 735i | GC51 ; GB/31/51 | E | 3430 | M30B/35/34M/35M.E7 | M | - | TSW 820220 | 09/86 ▸ 06/92 | 17111723689 | 734615 | 610 | 438 | ALB |
| 735i | GB/41/42/43/61/62 ; GC/41/42/43/61/62 | E | 3430 | M30B/35/34M/35M.E7 | A | + | | 09/86 ▸ 07/92 | 17111723467 | | 610 | 438 | CBS |
| 740i | GD/41/42/81/82 | E | 3982 | M60B40 | A | + | TSW 820220 | 09/92 ▸ 05/94 | 17112242138 | 819418 | 648 | 435 | ALB |
| 740i | GD/41/42/81/82 | E | 3982 | M60B40 | A | + | TSW 820220 | 09/92 ▸ 05/94 | 17111702453 | 731523 | 650 | 435 | ALB |
| 740i | GD/41/42/81/82 | E | 3982 | M60B40 | A | + | TSW 820220 | 09/92 ▸ 05/94 | 17111723398 | 732099 | 650 | 435 | ALB |
| 750i | GB/81/82 ; GC/81/82/83 | E | 4988 | M70B50 | A | + | TSW 820220 | 11/86 ▸ 05/94 | 17111723468 | 732099 | 650 | 435 | ALB |
| 750i | GB/81/82 ; GC/81/82/83 | E | 4988 | M70B50 | A | + | TSW 820220 | 11/86 ▸ 05/94 | 17112242138 | 819418 | 648 | 435 | ALB |

## 7 SERIES E38

| | | | | | | | | | | | | | |
|---|---|---|---|---|---|---|---|---|---|---|---|---|---|
| 728i | GE/11/30/31 | E | 2793 | M52B/28/28-EU3 | M | + | | 07/95 ▸ 08/01 | 17111702969 | | 650 | 439 | ALB |
| 728i | GE/30/31 | E | 2793 | M52B28-EU3 | M | + | TSW | 09/98 ▸ 08/01 | 17111436060 | 734277 | 650 | 438 | ALB |
| 728i | GH41 ; GE/21/22/40/41/42 | E | 2793 | M52B/28-EU3/28 | A | + | | 07/95 ▸ 08/01 | 17111702969 | | 650 | 439 | ALB |
| 728i | GH41 ; GE/40/41/42 | E | 2793 | M52B28-EU3 | A | + | TSW | 09/98 ▸ 08/01 | 17111436060 | 734277 | 650 | 438 | ALB |
| 730i | GF11 ; GJ11 | E | 2997 | M60B30 | M | + | | 06/94 ▸ 08/01 | 17111702969 | | 650 | 439 | ALB |
| 730i | GF21 ; GJ21 | E | 2997 | M60B30 | A | + | | 06/94 ▸ 08/01 | 17111702969 | | 650 | 439 | ALB |
| 735i | GF31 ; GJ31 | E | 3498 | M62B35 | M | + | | 04/96 ▸ 08/01 | 17111702969 | | 650 | 439 | ALB |
| 735i | GF31 ; GJ31 | E | 3498 | M62B35 | M | + | TSW | 09/98 ▸ 08/01 | 17111436061 | 734277 | 650 | 438 | ALB |
| 735i | GF31 ; GJ31 | E | 3498 | M62B35 | M | + | TSW | 09/98 ▸ 08/01 | 17111436063 | 735223 | 650 | 435 | ALB |
| 735i | GF31 ; GJ31 | E | 3498 | M62B35 | M | + | TSW | 09/98 ▸ 08/01 | 17111436063 | 735233 | 650 | 435 | ALB |
| 735i | GF41 ; GJ41 | E | 3498 | M62B35 | A | + | | 04/96 ▸ 08/01 | 17111702969 | | 650 | 439 | ALB |
| 735i | GF41 ; GJ41 | E | 3498 | M62B35 | A | + | TSW | 09/98 ▸ 08/01 | 17111436061 | 734277 | 650 | 438 | ALB |
| 735i | GF41 ; GJ41 | E | 3498 | M62B35 | A | + | TSW | 09/98 ▸ 08/01 | 17111436063 | 735223 | 650 | 435 | ALB |
| 735i | GF41 ; GJ41 | E | 3498 | M62B35 | A | + | TSW | 09/98 ▸ 08/01 | 17111436063 | 735233 | 650 | 435 | ALB |
| 740i | GF51 | E | 3982 | M60B40 | M | + | | 06/94 ▸ 03/96 | 17111702969 | | 650 | 439 | ALB |
| 740i | GF61 ; GJ61 | E | 3982 | M60B40 | A | + | | 06/94 ▸ 03/96 | 17111702969 | | 650 | 439 | ALB |
| 740i | GF71 ; GJ71 | E | 4398 | 448S1 | M | + | | 04/96 ▸ 08/01 | 17111702969 | | 650 | 439 | ALB |

# BMW (.../...)

## 7 SERIES E38 (.../...)

| | | | CC | | | AC | | | OE | Valeo | DIM. | | TECH |
|---|---|---|---|---|---|---|---|---|---|---|---|---|---|
| 740i | GF71 ; GJ71 | E | 4398 | 448S1 | M | + | TSW | 04/96 ▸ 08/01 | 17111436063 | **735223** | 650 | 435 | ALB |
| 740i | GF71 ; GJ71 | E | 4398 | 448S1 | M | + | TSW | 04/96 ▸ 08/01 | 17111436063 | **735233** | 650 | 435 | ALB |
| 740i | GF71 ; GJ71 | E | 4398 | 448S1 | M | + | TSW | 09/98 ▸ 08/01 | 17111436061 | **734277** | 650 | 438 | ALB |
| 740i | GF81 ; GJ81 | E | 4398 | 448S1 | A | + | TSW | 04/96 ▸ 08/01 | 17111436063 | **735223** | 650 | 435 | ALB |
| 740i | GF81 ; GJ81 | E | 4398 | 448S1 | A | + | TSW | 04/96 ▸ 08/01 | 17111436063 | **735233** | 650 | 435 | ALB |
| 740i | GF81 ; GJ81 | E | 4398 | 448S1 | A | + | | 04/96 ▸ 08/01 | 17111702969 | | 650 | 439 | ALB |
| 740i | GF81 ; GJ81 | E | 4398 | 448S1 | A | + | TSW | 09/98 ▸ 08/01 | 17111436061 | **734277** | 650 | 438 | ALB |
| 750i | GG21 ; GK21 | E | 5379 | M73B54 | A | + | TSW | 06/94 ▸ 08/01 | 17111436062 | **735233** | 650 | 435 | ALB |
| 750i | GG21 ; GK21 | E | 5379 | M73B54 | A | + | TSW | 06/94 ▸ 08/01 | 17111436062 | **735223** | 650 | 435 | ALB |
| 750i | GG21 ; GK21 | E | 5379 | M73B54 | A | + | | 06/94 ▸ 08/01 | 17111702969 | | 650 | 439 | ALB |
| 750i | GG21 ; GK21 | E | 5379 | M73B54 | A | + | TSW | 09/98 ▸ 08/01 | 17111436063 | **735223** | 650 | 435 | ALB |
| 750i | GG21 ; GK21 | E | 5379 | M73B54 | A | + | TSW | 09/98 ▸ 08/01 | 17111436063 | **735233** | 650 | 435 | ALB |
| 725Tds | GE91 | D | 2497 | M51D25 | M | +/- | TSW 820316 | 04/96 ▸ 08/01 | 17112246012 | **731766** | 650 | 438 | ALB |
| 725Tds | GE01 | D | 2497 | M51D25 | A | +/- | TSW 820316 | 04/96 ▸ 08/01 | 17112246012 | **731766** | 650 | 438 | ALB |
| 730d | GE/60/61 | D | 2926 | 306D1 | A | + | | 09/98 ▸ 03/00 | 17112247345 | **734394** | 650 | 328 | ALB |
| 730d | | D | 2926 | M57D30-193 | A | | | 04/00 ▸ 08/01 | 17112247345 | **734394** | 650 | 328 | ALB |
| 740d | GE81 | D | 3901 | M67D40 | A | + | | 03/99 ▸ 08/01 | 17112247345 | **734394** | 650 | 328 | ALB |

## 7 SERIES E65

| | | | | | | | | | | | | | |
|---|---|---|---|---|---|---|---|---|---|---|---|---|---|
| 730i | GL/21/22 | E | 2979 | M54B30 | A | + | | 09/03 ▸ 02/05 | 17117507972 | **734396** | 620 | 490 | ALB |
| 735i | GL/41/42 | E | 3600 | N62B36VVT | A | + | | 09/01 ▸ 02/05 | 17117507972 | **734396** | 620 | 490 | ALB |
| 740i | HL/61/62 | E | 4000 | N62B40TU | A | + | | 03/05 ▸ 10/08 | 17117519209 | **734897** | 623 | 486 | ALB |
| 745i | GL/61/62 | E | 4398 | N62B44VVT | A | + | | 09/01 ▸ 02/05 | 17117507972 | **734396** | 620 | 490 | ALB |
| 750i | HL/81/82 | E | 4799 | N62B48TU | A | + | | 03/05 ▸ 10/08 | 17117519209 | **734897** | 623 | 486 | ALB |
| 760i | GL/81/82 | E | 5972 | N73B60A | A | + | | 02/03 ▸ 02/05 | 17117507972 | **734396** | 620 | 490 | ALB |
| 730d | GM/21/22 ;HM/21/22 | D | 2993 | 306D2/D3 | A | + | | 03/05 ▸ 10/08 | 17112248478 | **734395** | 600 | 380 | ALB |
| 740d | GM/41/42 | D | 3901 | M67D40 | A | | | 09/02 ▸ 02/05 | 17112248478 | **734395** | 600 | 380 | ALB |

## 7 SERIES E66

| | | | | | | | | | | | | | |
|---|---|---|---|---|---|---|---|---|---|---|---|---|---|
| 730Li | GN/21/22 | E | 2979 | M54B30 | A | + | | 09/03 ▸ 02/05 | 17117507972 | **734396** | 620 | 490 | ALB |
| 735Li | GN/41/42 | E | 3600 | N62B36VVT | A | + | | 03/02 ▸ 02/05 | 17117507972 | **734396** | 620 | 490 | ALB |
| 740Li | HN/61/62 | E | 4000 | N62B40TU | A | + | | 03/05 ▸ 10/05 | 17117519209 | **734897** | 623 | 486 | ALB |
| 745Li | GN/61/62 | E | 4398 | N62B44VVT | A | + | | 03/02 ▸ 02/05 | 17117507972 | **734396** | 620 | 490 | ALB |
| 750Li | HN/81/82 | E | 4799 | N62B48TU | A | | | 03/05 ▸ 10/05 | 17117519209 | **734897** | 623 | 486 | ALB |
| 760Li | GN/81/82 | E | 5972 | N73B60A | A | + | | 02/03 ▸ 02/05 | 17117507972 | **734396** | 620 | 490 | ALB |

## 8 SERIES E31

| | | | | | | | | | | | | | |
|---|---|---|---|---|---|---|---|---|---|---|---|---|---|
| 840 | EF51 | E | 3982 | M60B40 | M | +/- | TSW 820220 | 03/94 ▸ 07/96 | 17111702453 | **731523** | 650 | 435 | ALB |
| 840 | EF/61/62 | E | 3982 | M60B40 | A | +/- | TSW 820220 | 12/92 ▸ 07/96 | 17111702762 | **731523** | 650 | 435 | ALB |
| 840 | EF/61/62 | E | 3982 | M60B40 | A | +/- | TSW 820220 | 12/92 ▸ 09/93 | 17112242138 | **819418** | 648 | 435 | ALB |
| 840 | EF/71/72/81/82 | E | 4398 | 448S1 | M | +/- | TSW 820220 | 03/96 ▸ 2000 | 17111702762 | **731523** | 650 | 435 | ALB |
| 840 | EF/81/82 | E | 4398 | 448S1 | A | +/- | TSW 820220 | 03/96 ▸ 2000 | 17111702762 | **731523** | 650 | 435 | ALB |
| 850 | EG/11/12 | E | 4988 | M70B50 | M | +/- | TSW 820220 | 09/89 ▸ 08/94 | 17112242138 | **819418** | 648 | 435 | ALB |
| 850 | EG/21/22 | E | 4988 | M70B50 | A | +/- | TSW 820220 | 09/89 ▸ 08/94 | 17111723468 | **732099** | 650 | 435 | ALB |
| 850 | EG41 | E | 5379 | M73B54 | A | +/- | TSW 820220 | 09/94 ▸ | 17111723468 | **732099** | 650 | 435 | ALB |
| 850 | EG41 | E | 5379 | M73B54 | A | | TSW 820220 | 09/94 ▸ 2000 | 17111702762 | **731523** | 650 | 435 | ALB |
| 850 | EG/91/92 | E | 5576 | S70B56 | M | +/- | TSW 820220 | 09/92 ▸ 07/96 | 17112242138 | **819418** | 648 | 435 | ALB |

## M3 E36

| | | | | | | | | | | | | | |
|---|---|---|---|---|---|---|---|---|---|---|---|---|---|
| 3.0 i | BF/91/92/99 ; BJ/91/92 ; CB/91/92 | E | 2990 | S50B/30/30GT | M | + | TSW | 06/92 ▸ 06/00 | 17112227281 | **731514** | 550 | 408 | ALB |
| 3.2 i | BK91 ; BG/91 ; CD/91/92 | E | 3201 | S50B32 | M | + | TSW | 07/95 ▸ 06/00 | 17112227281 | **731514** | 550 | 408 | ALB |

## M5 E34

| | | | | | | | | | | | | | |
|---|---|---|---|---|---|---|---|---|---|---|---|---|---|
| 3.6 i | HD/91/92 | E | 3535 | S38B36M | M | + | TSW 820220 | 07/88 ▸ 12/91 | 17112226336 | **734615** | 610 | 438 | ALB |
| 3.8 i | HJ91 ; HC/91/92 | E | 3795 | S38B38 | M | + | TSW 820220 | 12/91 ▸ 09/95 | 17112226336 | **734615** | 610 | 438 | ALB |

## M5 E39

| | | | | | | | | | | | | | |
|---|---|---|---|---|---|---|---|---|---|---|---|---|---|
| 5.0 i | DE91 | E | 4941 | S62B50 | M | + | TSW | 07/99 ▸ 06/03 | 17111436062 | **735233** | 650 | 435 | ALB |

## X1 (E84)

| | | | | | | | | | | | | | |
|---|---|---|---|---|---|---|---|---|---|---|---|---|---|
| 2.0 d 143 16V<br>2.0 d 177 16V | VN/11/12/31/32 ; VP 11/12/31/32 | D | 1995 | N47D/20A/20C | M | | | 10/09 ▸ | 17117788903 | **735165** | 600 | 338 | ALB |
| 2.0 d 177 16V<br>2.0 d 204 16V | VP/41/42/51/52 | D | 1995 | N47D/20C/20D | A | | | 10/09 ▸ | 17117788903 | **735165** | 600 | 338 | ALB |

## X5 (E53)

| | | | | | | | | | | | | | |
|---|---|---|---|---|---|---|---|---|---|---|---|---|---|
| 3.0 i 24V | FA//51 | E | 2979 | 306S3 | M | + | | 01/00 ▸ 11/06 | 17107544669 | **734896** | 590 | 594 | ALB |
| 3.0 i 24V | FA/11/18 | E | 2979 | 306S3 | A | + | | 01/00 ▸ 11/06 | 17107544668 | **734895** | 590 | 594 | ALB |
| 4.4 i | FB/31/38/3S | E | 4398 | 448S2 | A | + | | 01/00 ▸ 08/03 | 17107544668 | **734895** | 590 | 594 | ALB |
| 4.4 i | FB/31/38/3S/51/7S | E | 4398 | 448S2,N62B44A | A | + | | 01/00 ▸ 11/06 | 17101439101 | **734894** | 590 | 594 | ALB |

Radiator Radiateur Motorkühler Radiatore di raffreddamento Radiator Radyatör Radiador Радиатор vízhűtő Vodní chladič Radiator Ψυγείο



• **New** Nouveau **Nuevo** Novo **Nuovo** Nieuw **Neu** Nowość **Yeni** Новый Νέο **Nový**

| | Type Ctr. | | CC | | | AC | | | OE | Valeo | DIM. | | TECH |
|---|---|---|---|---|---|---|---|---|---|---|---|---|---|
| **BMW (.../...)** | | | | | | | | | | | | | |
| **X5 (E53) (.../...)** | | | | | | | | | | | | | |
| 4.6 is | FB91 | E | 4619 | 468S1 | A | | | 09/01 ▸ 11/06 | 17101439101 | **734894** | 590 | 594 | ALB |
| 4.8 is | FA91 | E | 4799 | N62B48A | A | + | | 03/04 ▸ 11/06 | 17101439101 | **734894** | 590 | 594 | ALB |
| 3.0 d | FA//71 | D | 2926 | 306D1 | M | + | | 03/01 ▸ 08/03 | 17107544669 | **734896** | 590 | 594 | ALB |
| 3.0 d | FA/70/71/78 | D | 2926 | 306D1 | A | + | | 03/01 ▸ 08/03 | 17107544668 | **734895** | 590 | 594 | ALB |
| 3.0 d 24V | FB70 | D | 2993 | 306D2 | A | + | | 08/03 ▸ 11/06 | 17101439101 | **734894** | 590 | 594 | ALB |
| **Z1 (E30)** | | | | | | | | | | | | | |
| 2.5 i | BA91 | E | 2494 | M20B25M1.Z7 | M | - | TSW | 03/89 ▸ 1992 | 17111712007 | **819414** | 551 | 326 | ALB |
| **Z3 (E36)** | | | | | | | | | | | | | |
| 1.8 i | CJ11 | E | 1796 | M43B18 | M | +/- | EXP, TSW | 01/96 ▸ 08/98 | 17111728905 | **732198** | 440 | 424 | ALB |
| 1.8 i | CJ21 | E | 1796 | M43B18 | A | +/- | EXP, TSW | 01/96 ▸ 08/98 | 17111728905 | **732198** | 440 | 424 | ALB |
| 1.9 i,1.9 i 16V | CH/71 ; CM/11/12 | E | 1895 | M43B19-EU3,M44B19 | M | +/- | EXP, TSW | 01/96 ▸ 06/02 | 17111728905 | **732198** | 440 | 424 | ALB |
| 1.9 i 16V | CH81 | E | 1895 | M44B19 | A | +/- | EXP, TSW | 01/96 ▸ 04/99 | 17111728905 | **732198** | 440 | 424 | ALB |
| 2.0 i | CL/31/32 | E | 1991 | M52B20-EU3 | M | + | TSW | 04/99 ▸ 10/00 | 17101715319 | **732199** | 578 | 424 | ALB |
| 2.0 i | CL/41/42 | E | 1991 | M52B20-EU3 | A | + | TSW | 04/99 ▸ 10/00 | 17101715319 | **732199** | 578 | 424 | ALB |
| 2.2 i | CN/11/12 | E | 2171 | M54B22 | M | + | TSW | 08/00 ▸ 06/02 | 17101715319 | **732199** | 578 | 424 | ALB |
| 2.2 i | CN/21/22 | E | 2171 | M54B22 | A | + | TSW | 08/00 ▸ 06/02 | 17101715319 | **732199** | 578 | 424 | ALB |
| 2.8 i 24V | CK51 ; CJ/31/32 | E | 2793 | M52B28 | M | + | TSW | 09/98 ▸ 05/00 | 17101715319 | **732199** | 578 | 424 | ALB |
| 2.8 i 24V | CK61 ; CJ/41/42 | E | 2793 | M52B28 | A | + | TSW | 03/96 ▸ 05/00 | 17111433025 | **732199** | 578 | 424 | ALB |
| 3.0 i 24V | CK/71 ; CN/51/52 | E | 2979 | 306S3 | M | + | TSW | 06/00 ▸ 06/02 | 17101715319 | **732199** | 578 | 424 | ALB |
| 3.0 i 24V | CK/81 ; CN/61/62 | E | 2979 | 306S3 | A | + | TSW | 06/00 ▸ 06/02 | 17101715319 | **732199** | 578 | 424 | ALB |
| 3.2 i | CK/91/92 ; CM/91/92 | E | 3201 | S50B32 | M | + | TSW | 06/96 ▸ 04/01 | 17112227281 | **731514** | 550 | 408 | ALB |
| 3.2 i | CL/91/92 | E | 3246 | S54B32-325 | M | + | TSW | 04/01 ▸ 05/02 | 17112227281 | **731514** | 550 | 408 | ALB |
| **Z4 (E85/E86)** | | | | | | | | | | | | | |
| 2.0 i 16V | BZ/11/12 | E | 1995 | N46B20O1 | M | +/- | | 03/05 ▸ 08/08 | 17119071517 | **734276** | 580 | 445 | ALB |
| 2.2 i 24V | BT/11/12 | E | 2171 | M54B22 | M | +/- | | 03/04 ▸ 01/06 | 17119071517 | **734276** | 580 | 445 | ALB |
| 2.2 i 24V | BT/21/22 | E | 2171 | M54B22 | A | +/- | | 03/04 ▸ 01/06 | 17119071518 | **734276** | 580 | 445 | ALB |
| 2.5 i 24V | BT//31/32 | E | 2494 | M54B25-6S5 | M | +/- | | 09/02 ▸ 01/06 | 17119071517 | **734276** | 580 | 445 | ALB |
| 2.5 i 24V | BT/41/42 | E | 2494 | M54B25-6S5 | A | +/- | | 09/02 ▸ 01/06 | 17119071518 | **734276** | 580 | 445 | ALB |
| 2.5 i 24V,2.5 si 24V | BU/11/12/31/32 | E | 2497 | N52B/25B/25A | M | +/- | | 02/06 ▸ 08/08 | 17119071517 | **734276** | 580 | 445 | ALB |
| 3.0 i 24V | BT//51/52 | E | 2979 | M54B30 | M | +/- | | 09/02 ▸ 01/06 | 17119071517 | **734276** | 580 | 445 | ALB |
| 3.0 i 24V | BT/61/62 | E | 2979 | M54B30 | A | +/- | | 09/02 ▸ 01/06 | 17119071518 | **734276** | 580 | 445 | ALB |
| 3.0 si 24V | BU/51/52 ; DU/51/52 | E | 2996 | N52B30A | M | +/- | | 02/06 ▸ 08/08 | 17119071517 | **734276** | 580 | 445 | ALB |
| 3.2 i 24V | BT/91/92 ; DU/91/92 | E | 3246 | S54B32 | M | +/- | | 02/06 ▸ 03/09 | 17119071517 | **734276** | 580 | 445 | ALB |
| 3.2 i 24V | BT/91/92 ; DU/91/92 | E | 3246 | S54B32 | M | | | 02/06 ▸ 08/08 | 17119071519 | **734276** | 580 | 445 | ALB |
| **Z4 (E89)** | | | | | | | | | | | | | |
| 2.5 i 24V | LM/41/42 | E | 2497 | N52B25A | A | | | 03/09 ▸ | 17117562079 | **735194** | 600 | 435 | ALB |
| 3.0 i 24V | LM/61/62 | E | 2996 | N52B30A | A | | | 03/09 ▸ | 17117562079 | **735194** | 600 | 435 | ALB |
| **Z8** | | | | | | | | | | | | | |
| 5.0 i V8 | EJ/11/12 | E | 4941 | S62B50 | M | + | TSW | 03/00 ▸ 07/03 | 17111436062 | **735233** | 650 | 435 | ALB |
| **CHEVROLET** | | | | | | | | | | | | | |
| **AVEO** | | | | | | | | | | | | | |
| 1.4 i 16V | | E | 1399 | F14D3 | M | | | 01/05 ▸ 02/08 | 96443475 | **735157** | 480 | 416 | ALB |
| **LACETTI** | | | | | | | | | | | | | |
| 1.6 i | | E | 1598 | F16D3 | M | | | 03/05 ▸ | 96553422 | **735159** | 702 | 377 | ALB |
| **CHRYSLER** | | | | | | | | | | | | | |
| **GRAND VOYAGER (91>96)** | | | | | | | | | | | | | |
| 3.3 i | | E | 3301 | EGA | A | | | 04/92 ▸ 10/95 | 4778044 | | 635 | 394 | ALB |
| 3.3 i | | E | 3301 | EGA | A | | | 04/92 ▸ 10/95 | 4644266 | **732780** | 654 | 377 | CBS |
| 2.5 TD | | D | 2499 | MOU | M | + | | 10/93 ▸ 10/95 | 4682495 | | 655 | 398,5 | CBS |
| **GRAND VOYAGER (2004>2008)** | | | | | | | | | | | | | |
| 2.4 i 16V | | E | 2429 | EDZ | M | | | 07/04 ▸ 01/08 | 4677524AA | | | | |
| 3.3 i V6 | | E | 3301 | EGA | A | | | 07/04 ▸ 01/08 | 4677523AA | | | | |
| 2.5 CRD | | D | 2499 | ENC | M | | | 07/04 ▸ 01/08 | 5072260AA | **732883** | 537 | 396 | ALB |
| 2.8 CRD | | D | 2776 | ENR | A | | | 07/04 ▸ 01/08 | 5142488AA | **732956** | 735 | 396 | ALB |
| **NEON** | | | | | | | | | | | | | |
| 1.6 i 16V | SM6P | E | 1598 | EJD | M | + | | 11/01 ▸ 09/05 | 4740097 | **732426** | 300 | 608 | ALB |

| Type Ctr. | | CC | | AC | | | OE | Valeo | DIM. | TECH |
|---|---|---|---|---|---|---|---|---|---|---|
| **CHRYSLER (.../...)** | | | | | | | | | | |
| **NEON (.../...)** | | | | | | | | | | |
| 1.8 i 16V SM7A | E | 1796 | EBD | M | + | | 06/97 ▸ 12/98 | 4546902 | **731749** | 295 632 | ALB |
| 1.8 i 16V SM7A | E | 1796 | EBD | M | | | 06/97 ▸ 12/98 | 4740097 | **732426** | 300 608 | ALB |
| 2.0 i 16V SM7Y ; SM6F ; SM7C SM6C | E | 1996 | ECB,ECC,ECH,ECM | M | + | | 10/93 ▸ 09/05 | 4740097 | **732426** | 300 608 | ALB |
| 2.0 i 16V SM7 ; SM7Y ; SM7C | E | 1996 | ECB,ECC,ECM | M | + | | 10/93 ▸ 12/98 | 4546902 | **731749** | 295 632 | ALB |
| 2.0 i 16V SN6C ; SN7C | E | 1996 | ECB | A | + | | 10/93 ▸ 09/05 | 4740097 | **732426** | 300 608 | ALB |
| 2.0 i 16V SN7C | E | 1996 | ECB | A | + | | 10/93 ▸ 12/98 | 4546902 | **731749** | 295 632 | ALB |
| **PT CRUISER** | | | | | | | | | | |
| 2.0 i 16V Z4B9 ; Y4B9 | E | 1996 | ECC | A | + | | 09/00 ▸ 12/02 | 5017404AB | **732704** | 460 525 | ALB |
| 2.0 i 16V Z4B9 ; Y4B9 | E | 1996 | ECC | M | + | | 09/00 ▸ 12/02 | 5017404AB | **732704** | 460 525 | ALB |
| 2.4 i 16V Y4BB ; Z4BB | E | 2429 | EDZ | M | + | | 06/00 ▸ 12/02 | 5017404AB | **732704** | 460 525 | ALB |
| 2.4 i 16V Z4BB ; Y4BB | E | 2429 | EDZ | A | + | | 06/00 ▸ 12/02 | 5017404AB | **732704** | 460 525 | ALB |
| **VOYAGER (91>95)** | | | | | | | | | | |
| 2.5 i 24V HN5K ; HN5KR | E | 2501 | EDM | M | +/- | | 03/91 ▸ 12/92 | 4546407 | | 403 399 | CBS |
| 2.5 i 24V HN5KR ; HN5K | E | 2501 | EDM | M | +/- | | 01/93 ▸ 10/95 | 4644363 | | 635 394 | ALB |
| 2.5 i 24V HN5KR ; HN5K | E | 2501 | EDM | M | | | 03/91 ▸ 12/92 | 4546405 | | 403 399 | CBS |
| 2.5 i 24V HN5K ; HN5KR | E | 2501 | EDM | M | | | 03/91 ▸ 10/95 | 4644266 | **732780** | 654 377 | CBS |
| 2.5 i 24V HN5KR ; HN5K | E | 2501 | EDM | M | | | 03/91 ▸ 06/94 | 4778044 | | 635 394 | ALB |
| 2.5 i 24V HN5KR ; HN5K | E | 2501 | EDM | M | | | 07/94 ▸ 10/95 | 4644364 | | 668 394 | ALB |
| 3.3 i KB5RP ; KB5R ; HB5R | E | 3301 | EGA | A | +/- | | 04/92 ▸ 12/92 | 4546407 | | 403 399 | CBS |
| 3.3 i KB5R ; HB5R ; KB5RP | E | 3301 | EGA | A | +/- | | 01/93 ▸ 10/95 | 4644363 | | 635 394 | ALB |
| 3.3 i KB5R ; KB5RP ; HB5R | E | 3301 | EGA | A | | | 04/92 ▸ 10/95 | 4778044 | | 635 394 | ALB |
| 3.3 i KB5RP ; HB5R ; KB5R | E | 3301 | EGA | A | | | 04/92 ▸ 10/95 | 4644266 | **732780** | 654 377 | CBS |
| 2.5 TD HN5MR ; HN5M | D | 2499 | MOU | M | + | | 01/93 ▸ 10/95 | 4682495 | | 655 398,5 | CBS |
| 2.5 TD HN5M ; HN5MR | D | 2499 | MOU | M | - | | 01/93 ▸ 10/95 | 4682543 | | 655 398,5 | CBS |
| **VOYAGER (96>2001)** | | | | | | | | | | |
| 2.4 i 16V | E | 2459 | EDZ | M | + | | 01/96 ▸ 03/01 | 4682587 | | 663 3377 | CBS |
| 3.3 i V6 | E | 3301 | EGA | A | + | | 01/96 ▸ 03/01 | 4682587 | | 663 3377 | CBS |
| 3.8 i V6 | E | 3778 | EGH | A | + | | 10/96 ▸ 03/01 | 4682587 | | 663 3377 | CBS |
| 2.5 TD | D | 2499 | ENC | M | | | 01/96 ▸ 03/01 | 4798013 | **731531** | 665 322 | ALB |
| **VOYAGER (2001>2004)** | | | | | | | | | | |
| 2.5 CRD | D | 2499 | ENJ | M | | | 03/01 ▸ 04/04 | 5072260AA | **732883** | 537 396 | ALB |
| **VOYAGER (2004>)** | | | | | | | | | | |
| 2.4 i 16V | E | 2429 | EDZ | M | | | 07/04 ▸ 02/08 | 4677524AA | | | |
| 2.4 i 16V | E | 2429 | EDZ | A | | | 07/04 ▸ 02/08 | 4677524AA | | | |
| 3.3 i V6 | E | 3301 | EGA | A | | | 07/04 ▸ 02/08 | 4677523AA | | | |
| 2.5 CRD | D | 2499 | ENJ | M | | | 07/04 ▸ 02/08 | 5072260AA | **732883** | 537 396 | ALB |
| 2.8 CRD | D | 2776 | ENR | A | | | 07/04 ▸ 02/08 | 5142488AA | **732956** | 735 396 | ALB |
| 2.8 CRD | D | 2776 | ENR | A | | | 07/04 ▸ 02/08 | 5072260AA | **732883** | 537 396 | ALB |
| **CITROEN** | | | | | | | | | | |
| **AX (86>91)** | | | | | | | | | | |
| 1.0 ZAZ/A/AB/AE/AR/ART/AT/E/H/HB | E | 954 | TU9 | M | | TSW | 09/86 ▸ 04/91 | 96011831 | **883866** | 390 322 | ALM |
| 1.1,1.1 i ZAD/A/B/C ; ZAZ/B/BD BT/F/J/JD/M/P/S | E | 1124 | TU1,TU1CP,TU1M | M | | TSW | 09/86 ▸ 04/91 | 96011831 | **883866** | 390 322 | ALM |
| 1.4,1.4 i ZAD/D/DB/E/EB ; ZAZ C/CD/D/DD/K/KD/N/R/W/X/Y | E | 1360 | TU3,TU3A,TU3CP,TU3M,TU3S | M | | TSW | 09/86 ▸ 04/91 | 96011831 | **883866** | 390 322 | ALM |
| 1.4 D ZAZ/T/TT/U/V | D | 1360 | TUD3 | M | | TSW | 09/88 ▸ 04/91 | 95659648 | **816706** | 390 322 | ALM |
| **AX (91>98)** | | | | | | | | | | |
| 1.0,1.0 i ZAL/H/J ; ZAZ/A/AT/H | E | 954 | TU9,TU9M | M | + | TSW | 05/91 ▸ 07/98 | 96140587 | **730498** | 389 312,5 | ALB |
| 1.0,1.0 i ZAL/H/J ; ZAZ/A/AT/H | E | 954 | TU9,TU9M | M | - | TSW | 05/91 ▸ 07/98 | 96082116 | **730491** | 390 322 | ALM |
| 1.1,1.1 i ZALAT ; ZAD/A/AB/AC B/BB/BC ; ZAZ/B/BT/J | E | 1124 | TU1,TU1M | M | + | TSW | 05/91 ▸ 07/96 | 96140587 | **730498** | 389 312,5 | ALB |
| 1.1,1.1 i ZALAT ; ZAD/A/AB/AC B/BB/BC ; ZAZ/B/BT/J | E | 1124 | TU1,TU1M | M | | TSW | 05/91 ▸ 07/96 | 1331HL | **730491** | 390 322 | ALM |
| 1.4,1.4 i ZAD/D/DB/E/EB/H/J/M N ; ZAL/B/C/F/G ; ZAZ/D/Y | E | 1360 | TU3.2,TU3J2,TU3M,TU3MC,TU3S TU3FJ2 | M | + | TSW | 05/91 ▸ 07/96 | 96140587 | **730498** | 389 312,5 | ALB |
| 1.4,1.4 i ZAD/H/J/M/N ; ZAZ/D Y | E | 1360 | TU3.2,TU3J2,TU3S | M | - | TSW | 05/91 ▸ 07/96 | 96082116 | **730491** | 390 322 | ALM |
| 1.4 D ZAD/F/G ; ZAZ/T/TT/U | D | 1360 | TUD3 | M | | TSW | 05/91 ▸ 07/94 | 95659648 | **816706** | 390 322 | ALM |

Radiator Radiateur Motorkühler Radiatore di raffreddamento Radyatör Radiator Радиатор vízhűtő Vodní chladič Radiator Ψυγείο



• **New** Nouveau **Nuevo** Novo **Nuovo** Nieuw **Neu** Nowość **Yeni** Новый Νέο **Nový**

| Type Ctr. | | CC | | AC | | | OE | Valeo | DIM. | TECH |
|---|---|---|---|---|---|---|---|---|---|---|
| **CITROEN (.../...)** | | | | | | | | | | |
| **AX (91>98) (.../...)** | | | | | | | | | | |
| 1.4 D ZAD/F/G ; ZAZ/T/TT/U | D | 1360 | TUD3 | M | | TSW | 09/92 ▸ 07/94 | 96172131 | **730632** | 390 322 | ALM |
| 5806 ▸ | | | | | | | | | | |
| 1.5 D ZAK/E/ET/F | D | 1527 | TUD5 | M | | TSW 819747 | 07/94 ▸ 07/96 | 1301V4 | **731177** | 390 322 | ALM |
| **BX** | | | | | | | | | | |
| 1.4 GPL XBERBB | F | 1360 | TU3A | M | - | TSW | 07/89 ▸ 12/94 | 95495037 | **883774** | 425 378 | ALM |
| 1.6 GPL XBXEBC | F | 1560 | XU5S | M | +/- | TSW | 07/85 ▸ 06/88 | 95495038 | **883773** | 600 378 | ALM |
| 1.1 XBXR | E | 1124 | XW7B2 | M | - | | 09/82 ▸ 05/88 | 95494955 | | 370 378 | ALM |
| 1.1 XBEP ; XBXR | E | 1124 | TU1,XW7B2 | M | - | TSW | 05/88 ▸ 1991 | 95495037 | **883774** | 425 378 | ALM |
| 1.4 XBE/C/RB/RBB ; XBX/A/D/DBC/T/Y/YE | E | 1360 | XY6C,XY6D | M | - | | 09/82 ▸ 04/88 | 95494955 | | 370 378 | ALM |
| 1.4,1.4 i XBFG ; XBE/C/R/RB RBB/S ; XBH/C/D/Y ; XBX/A/D/DA/DBC/T/Y/YE | E | 1360 | TU3.2,TU3A,TU3M,XY6,XY6C,XY6D XY7CP | M | - | TSW | 02/86 ▸ 12/94 | 95495037 | **883774** | 425 378 | ALM |
| 1.6,1.6 i XBE/B ; XBX/E/EE/S/X | E | 1580 | XU52C,XU5CP,XU5J,XU5S,XU5STR | M | +/- | TSW | 07/85 ▸ 09/91 | 95495038 | **883773** | 600 378 | ALM |
| 1.6,1.6 i HBH/Z ; XBE/A/E/EBC XBF/A/L/V/W ; XBH/J/P/Y ; XBX/B/BE/E/K/W/X | E | 1580 | 171,XU51C,XU52C,XU5CP,XU5J XU5J2,XU5JA,XU5M,XU5S,XU5STR | M | - | TSW | 09/82 ▸ 12/94 | 95495037 | **883774** | 425 378 | ALM |
| 1.6,1.6 i HBHYA ; XBXBAA | E | 1580 | XU52C,XU5M,XU5S | A | - | TSW | 07/84 ▸ 12/94 | 95495037 | **883774** | 425 378 | ALM |
| 1.9,1.9 i XBE/G/H/W/Y/Z ; XBF E/F/N/P/R/S/SC/T/X/Y/Z ; XBH/A/K/KB/L/LB/M N ; XBX/G/H/J/M/N/TC | E | 1905 | XU9,XU92C,XU92C+,XU9J1,XU9J2 XU9JA,XU9M,XU9S | M | +/- | TSW | 07/84 ▸ 12/94 | 95495038 | **883773** | 600 378 | ALM |
| 1.9 i 16S XBEJ ; XBFC | E | 1905 | XU9J4 | M | +/- | TSW 819773 | 07/87 ▸ 12/94 | 95636832 | **730635** | 530 286 | CBS |
| 1.9 i 16S XBFC | E | 1905 | XU9J4 | M | | TSW | 07/87 ▸ 12/94 | 95495038 | **883773** | 600 378 | ALM |
| 1.9,1.9 i XBE/GA/HA/YA ; XBF SA/TA/YA ; XBH/KA/LA ; XBX/GA/HA/MA | E | 1905 | XU92C,XU92C+,XU9J1,XU9J2 XU9JA,XU9S | A | +/- | TSW | 07/84 ▸ 12/94 | 95495038 | **883773** | 600 378 | ALM |
| 1.7 D,1.7 TD XBE/D ; XBXP ; XBH/R S | D | 1769 | XUD7,XUD7TE | M | +/- | | 10/84 ▸ 12/94 | 96045621 | | 600 378 | ALB |
| 1.9 D XBXC | D | 1905 | XUD9,XUD9A | M | +/- | TSW | 12/89 ▸ 12/94 | 95495038 | **883773** | 600 378 | ALM |
| 1.9 D XBX/CA/CAA | D | 1905 | XUD9,XUD9A | A | +/- | TSW | 07/83 ▸ 12/94 | 95495038 | **883773** | 600 378 | ALM |
| **C CROSSER** | | | | | | | | | | |
| 2.2 HDi 16V VU4HNH | D | 2179 | DW12MTED4 | M | + | | 07/07 ▸ | 1330V1 | **735200** | 700 402 | ALB |
| **C1** | | | | | | | | | | |
| 1.0 i 12V PMCFAC ; PNCFAC | E | 998 | 384F(CFA) | M | + | | 06/05 ▸ | 1330P5 | **735069** | 374 326 | ALB |
| 1.0 i 12V PMCFAC ; PNCFAC | E | 998 | 384F(CFA) | M | - | | 06/05 ▸ | 1330P4 | **735072** | 374 340 | ALB |
| 1.4 HDi PM8HTC ; PN8HTC | D | 1398 | DV4TD | M | + | | 06/05 ▸ | 1330P3 | **735070** | 374 326 | ALB |
| 1.4 HDi PM8HTC ; PN8HTC | D | 1398 | DV4TD | M | - | | 06/05 ▸ | 1330P2 | **735070** | 374 326 | ALB |
| **C2** | | | | | | | | | | |
| 1.1 i JGH/FXB/FXC ; JMH/FXB/FXC | E | 1124 | TU1A,TU1JP | M | + | LEx+ | 09/03 ▸ 01/10 | 1330S1 | **732930** | 378,6 405,5 | ALB |
| 1.1 i JGH/FXB/FXC ; JMH/FXB/FXC | E | 1124 | TU1A,TU1JP | M | - | | 09/03 ▸ | 1330C0 | **732831** | 380 403,3 | ALM |
| 1.1 i JGH/FXB/FXC ; JMH/FXB/FXC | E | 1124 | TU1A,TU1JP | M | - | | 09/03 ▸ | 1330Q0 | **734921** | 380 414,5 | ALM |
| 1.4 i,1.4 i 16V JGK/FVB ; JMK/FUC FVB/FVC | E | 1360 | ET3J4,TU3A,TU3JP | M | + | LEx+ | 09/03 ▸ 01/10 | 1330S1 | **732930** | 378,6 405,5 | ALB |
| 1.4 i,1.4 i 16V JGK/FVB ; JMK/FUC FVB/FVC | E | 1360 | ET3J4,TU3A,TU3JP | M | - | | 09/03 ▸ | 1330Q0 | **734921** | 380 414,5 | ALM |
| 1.4 i,1.4 i 16V JGK/FVB ; JMK/FUC FVB/FVC | E | 1360 | ET3J4,TU3A,TU3JP | M | - | | 09/03 ▸ | 1330C2 | **732831** | 380 403,3 | ALM |
| 1.6 i 16V JGN/FUC ; JMN/FSC FUB/FUC | E | 1587 | TU5JP4,TU5JP4S | M | + | LEx+ | 09/03 ▸ 01/10 | 1330S1 | **732930** | 378,6 405,5 | ALB |
| 1.6 i 16V JGN/FUC ; JMN/FSC FUB/FUC | E | 1587 | TU5JP4,TU5JP4S | M | - | | 09/03 ▸ 01/10 | 1330C2 | **732831** | 380 403,3 | ALM |
| 1.6 i 16V JGN/FUC ; JMN/FSC FUB/FUC | E | 1587 | TU5JP4,TU5JP4S | M | - | | 09/03 ▸ | 1330Q0 | **734921** | 380 414,5 | ALM |
| 1.4 HDi JG8/HXB/HZC ; JM8 HXB/HXC/HZB/HZC | D | 1398 | DV4TD | M | + | LEx+ | 09/03 ▸ 01/10 | 1330E6 | **732930** | 378,6 405,5 | ALB |
| 1.4 HDi JG8/HXB/HZC ; JM8 HXB/HXC/HZB/HZC | D | 1398 | DV4TD | M | + | | 09/03 ▸ 01/10 | 1330P9 | •**735608** | 378 536 | ALB |
| 1.4 HDi JG8/HXB/HZC ; JM8 HXB/HXC/HZB/HZC | D | 1398 | DV4TD | M | + | | 09/03 ▸ 01/10 | 1330P8 | **734398** | 378 558 | ALB |
| 1.4 HDi JG8/HXB/HZC ; JM8 HXB/HXC/HZB/HZC | D | 1398 | DV4TD | M | - | LEx+ | 09/03 ▸ 01/10 | 1330E5 | **732930** | 378,6 405,5 | ALB |
| 1.6 HDi 16V JM9HZC | D | 1560 | DV6TED4 | M | + | | 11/05 ▸ 01/10 | 1330P8 | **734398** | 378 558 | ALB |
| 1.6 HDi 16V JM9HZC | D | 1560 | DV6TED4 | M | + | LEx+ | 11/05 ▸ 01/10 | 1330Q5 | **732930** | 378,6 405,5 | ALB |
| 1.6 HDi 16V JM9HZC | D | 1560 | DV6TED4 | M | + | | 11/05 ▸ 01/10 | 1330P9 | •**735608** | 378 536 | ALB |
| 1.6 HDi 16V JM9HZC | D | 1560 | DV6TED4 | M | - | LEx+ | 11/05 ▸ 01/10 | 1330E5 | **732930** | 378,6 405,5 | ALB |
| **C3 (2002>2005)** | | | | | | | | | | |
| 1.1 i FCH/FXB/FXC ; FRHFXB ; FNH/FXB/FXC | E | 1124 | TU1JP | M | +/- | | 04/02 ▸ 10/05 | 1330C0 | **732831** | 380 403,3 | ALM |
| 1.4 i FCK/FVB/FVC ; FNK/FVB/FVC | E | 1360 | TU3JP | M | + | LEx+ | 04/02 ▸ 10/05 | 1330J2 | **732930** | 378,6 405,5 | ALB |

# CITROEN (.../...)

| | | | CC | | | AC | | | OE | Valeo | DIM. | TECH |
|---|---|---|---|---|---|---|---|---|---|---|---|---|
| **C3 (2002>2005) (.../...)** | | | | | | | | | | | | |
| 1.4 i,1.4 i 16V | FCK/FUC/FVB/FVC FNK/FVB/FVC | E | 1360 | ET3J4,TU3JP | M | +/- | | 04/02 ▸ 10/05 | 1330C2 | **732831** | 380 403,3 | ALM |
| 1.4 i | FCK/FVE/FVF ; FNK/FVE/FVF | E | 1360 | TU3JP | A | +/- | | 04/02 ▸ 10/05 | 1330C1 | **732831** | 380 403,3 | ALM |
| 1.6 i 16V | FCNFUB ; FNNFUB | E | 1587 | TU5JP4 | M | +/- | | 04/02 ▸ 10/05 | 1330C0 | **732831** | 380 403,3 | ALM |
| 1.6 i 16V | FCNFUB ; FNNFUB | E | 1587 | TU5JP4 | M | + | LEx+ | 04/02 ▸ 10/05 | 1330J2 | **732930** | 378,6 405,5 | ALB |
| 1.4 HDi,1.4 HDi 16V | FC8/HYB/HZ/HZB ; FN8 HYB/HZB ; FR8/HYB/XZB | D | 1398 | DV4TD,DV4TED4 | M | +/- | LEx+ | 01/03 ▸ 10/05 | 1330N3 | **732930** | 378,6 405,5 | ALB |
| 1.6 HDi 16V | FC9HXC | D | 1560 | DV6ATED4 | M | +/- | LEx+ | 06/05 ▸ 10/05 | 1330E6 | **732930** | 378,6 405,5 | ALB |
| **C3 (2005>)** | | | | | | | | | | | | |
| 1.1 i GPL | FCHFXC | F | 1124 | TU1A | M | | | 11/09 ▸ 01/11 | 1330P8 | **734398** | 378 558 | ALB |
| 1.1 i GPL | FCHFXC | F | 1124 | TU1A | M | | | 11/09 ▸ 01/11 | 1330C2 | **732831** | 380 403,3 | ALM |
| 1.4 i GNV | FCKFVC | F | 1360 | TU3JP | M | + | | 11/05 ▸ 10/09 | 1330P8 | **734398** | 378 558 | ALB |
| 1.4 i GNV | FCKFVC | F | 1360 | TU3JP | M | - | | 11/05 ▸ | 1330Q0 | **734921** | 380 414,5 | ALM |
| 1.1 i | FCHFXC | E | 1124 | TU1A | M | +/- | | 11/05 ▸ | 1330C0 | **732831** | 380 403,3 | ALM |
| 1.1 i | FCHFXC | E | 1124 | TU1A | M | - | | 11/05 ▸ | 1330Q0 | **734921** | 380 414,5 | ALM |
| 1.1 i | FCHFXC | E | 1124 | TU1A | M | | | 11/09 ▸ 01/11 | 1330C2 | **732831** | 380 403,3 | ALM |
| 1.4 i,1.4 i 16V | FCK/FUC/FVB/FVC | E | 1360 | ET3J4,TU3A,TU3JP | M | +/- | | 11/05 ▸ | 1330C2 | **732831** | 380 403,3 | ALM |
| 1.4 i,1.4 i 16V | FCK/FUC/FVB/FVC | E | 1360 | ET3J4,TU3A,TU3JP | M | + | | 11/05 ▸ 10/09 | 1330P8 | **734398** | 378 558 | ALB |
| 1.4 i,1.4 i 16V | FCK/FUC/FVB/FVC | E | 1360 | ET3J4,TU3A,TU3JP | M | - | | 11/05 ▸ | 1330Q0 | **734921** | 380 414,5 | ALM |
| 1.6 i 16V | FCN/FUB/FUC | E | 1587 | TU5JP4 | M | +/- | | 11/05 ▸ | 1330C0 | **732831** | 380 403,3 | ALM |
| 1.6 i 16V | FCN/FUB/FUC | E | 1587 | TU5JP4 | M | + | | 11/05 ▸ 10/09 | 1330P8 | **734398** | 378 558 | ALB |
| 1.6 i 16V | FCN/FUB/FUC | E | 1587 | TU5JP4 | M | - | | 11/05 ▸ | 1330Q0 | **734921** | 380 414,5 | ALM |
| 1.6 i 16V | FCNFUC | E | 1587 | TU5JP4 | A | + | | 12/06 ▸ 10/09 | 1330P8 | **734398** | 378 558 | ALB |
| 1.6 i 16V | FCNFUC | E | 1587 | TU5JP4 | A | - | | 12/06 ▸ | 1330C0 | **732831** | 380 403,3 | ALM |
| 1.6 i 16V | FCNFUC | E | 1587 | TU5JP4 | A | - | | 12/06 ▸ | 1330Q0 | **734921** | 380 414,5 | ALM |
| 1.4 HDi | FC8HZC | D | 1398 | DV4TD | M | + | | 11/05 ▸ 01/11 | 1330P8 | **734398** | 378 558 | ALB |
| 1.4 HDi | FC8HZC | D | 1398 | DV4TD | M | + | LEx+ | 11/05 ▸ 10/09 | 1330E6 | **732930** | 378,6 405,5 | ALB |
| 1.4 HDi | FC8HZC | D | 1398 | DV4TD | M | - | LEx+ | 11/05 ▸ 10/09 | 1330E5 | **732930** | 378,6 405,5 | ALB |
| 1.6 HDi 16V | FL9HXC ; FC9/HXC/HZC | D | 1560 | DV6ATED4,DV6TED4 | M | + | | 11/05 ▸ 10/09 | 1330P8 | **734398** | 378 558 | ALB |
| **C3 (2009>)** | | | | | | | | | | | | |
| 1.6 VTi 120 16V | SC5FS0 ; SCK5FS | E | 1598 | EP6C | M | +/- | | 10/09 ▸ | 1330P9 | •**735608** | 378 536 | ALB |
| 1.6 VTi 120 16V | SC5FS9 | E | 1598 | EP6C | A | +/- | | 03/10 ▸ | 1330P9 | •**735608** | 378 536 | ALB |
| 1.4 HDi 68,1.4 HDi 70 | SC8/HR0/HZC | D | 1398 | DV4C,DV4TD | M | | LEx+ | 10/09 ▸ | 1330Q5 | **732930** | 378,6 405,5 | ALB |
| 1.4 HDi 68 | SC8HR0 | D | 1398 | DV4C | M | +/- | | 10/10 ▸ | 1330P9 | •**735608** | 378 536 | ALB |
| 1.6 HDi 110 1.6 HDi 90 16V,1.6 HDi 92 | SC9/HP0/HR8/HXC | D | 1560 | DV6ATED4,DV6C,DV6DTED | M | +/- | | 10/09 ▸ | 1330P9 | •**735608** | 378 536 | ALB |
| 1.6 HDi 110 | SC9HR8 | D | 1560 | DV6C | M | | LEx+ | 03/10 ▸ | 1330Q5 | **732930** | 378,6 405,5 | ALB |
| **C3 PICASSO (2009>)** | | | | | | | | | | | | |
| 1.4 VTi 95 16V | SH8FSC | E | 1397 | EP3 | M | +/- | | 02/09 ▸ | 1330P9 | •**735608** | 378 536 | ALB |
| 1.6 VTi 120 16V | SH5FWO | E | 1598 | EP6 | M | +/- | | 02/09 ▸ | 1330P9 | •**735608** | 378 536 | ALB |
| 1.6 HDi 110 16V 1.6 HDi 90 16V | SH9/HXC/HZC | D | 1560 | DV6ATED4,DV6TED4 | M | +/- | | 02/09 ▸ | 1330P9 | •**735608** | 378 536 | ALB |
| **C3 PLURIEL** | | | | | | | | | | | | |
| 1.4 i | HBKFVB/FVC | E | 1360 | TU3A,TU3JP | M | +/- | | 05/03 ▸ 01/11 | 1330C2 | **732831** | 380 403,3 | ALM |
| 1.4 i | HBKFVB | E | 1360 | TU3JP | M | +/- | | 05/03 ▸ | 1330Q0 | **734921** | 380 414,5 | ALM |
| 1.6 i 16V | HBNFUB | E | 1587 | TU5JP4 | M | +/- | | 05/03 ▸ | 1330Q0 | **734921** | 380 414,5 | ALM |
| 1.6 i 16V | HBNFUB | E | 1587 | TU5JP4 | M | +/- | | 05/03 ▸ 01/11 | 1330C2 | **732831** | 380 403,3 | ALM |
| 1.4 HDi | HB8HZB | D | 1398 | DV4TD | M | +/- | LEx+ | 02/04 ▸ 12/05 | 1330E5 | **732930** | 378,6 405,5 | ALB |
| 1.4 HDi | HB8HZB | D | 1398 | DV4TD | M | + | LEx+ | 02/04 ▸ 12/05 | 1330Q5 | **732930** | 378,6 405,5 | ALB |
| **C4 (2004>2010)** | | | | | | | | | | | | |
| 1.6 i 16V | LAN6AC | F | 1587 | TU5JP4 | M | | DN6, TSW | 09/07 ▸ 07/08 | 1330F4 | **732892** | 378 562,8 | ALB |
| 1.4 i 16V | LAKFUC ; LCKFUC | E | 1360 | ET3J4 | M | +/- | | 11/04 ▸ 12/10 | 1330N5 | **734346** | 380 551 | ALM |
| 1.4 i 16V | LAKFUC ; LCKFUC | E | 1360 | ET3J4 | M | +/- | | 11/04 ▸ 12/10 | 1330S8 | **735091** | 378,6 562,6 | ALB |
| 1.4 i 16V | LAKFUC ; LCKFUC | E | 1360 | ET3J4 | M | +/- | DN6, TSW | 11/04 ▸ 03/07 | 1330F4 | **732892** | 378 562,8 | ALB |
| 1.4 i 16V | LAKFUC ; LCKFUC | E | 1360 | ET3J4 | M | +/- | | 03/07 ▸ 12/07 | 1330W2 | **734338** | 378,6 568,8 | ALB |
| 1.4 i 16V | LAKFUC ; LCKFUC | E | 1360 | ET3J4 | M | +/- | | 11/07 ▸ | 1330F5 | •**735608** | 378 536 | ALB |
| 1.6 i 16V | LANFUC ; LCNFUC | E | 1587 | TU5JP4 | M | +/- | DN6, TSW | 11/04 ▸ 10/05 | 1330G2 | **732908** | 380 551,3 | ALM |
| 1.6 i 16V | LAN/FUC ; LDNFUC LCN/FUC/FUL | E | 1587 | TU5JP4 | M | +/- | | 10/05 ▸ 12/10 | 1330V5 | •**735090** | 378 562,5 | ALB |
| 1.6 i 16V | LAN/FUC/FUL LDNFUC ; LCN/FUC/FUL | E | 1587 | TU5JP4 | M | | DN6, TSW | 11/04 ▸ 12/10 | 1330F4 | **732892** | 378 562,8 | ALB |
| 1.6 i 16V | LANFUF ; LCNFUF | E | 1587 | TU5JP4 | A | +/- | TSW | 11/04 ▸ 03/07 | 1330S7 | •**735597** | 378,6 568,8 | ALB |
| 1.6 i 16V | LANFUF ; LCNFUF | E | 1587 | TU5JP4 | A | +/- | DN6 LEx+ | 11/04 ▸ 01/07 | 1330F6 | **732893** | 378 562,8 | ALB |

Radiator Radiateur Motorkühler Radiatore di raffreddamento Radiator Radyatör Radiador Радиатор vízhűtő Vodní chladič Radiator Ψυγείο



• **New** Nouveau **Nuevo** Novo **Nuovo** Nieuw **Neu** Nowość **Yeni** Новый Νέο **Novy**

# CITROEN (.../...)

## C4 (2004>2010) (.../...)

| | | | | | | | | | | | | |
|---|---|---|---|---|---|---|---|---|---|---|---|---|
| 1.6 i 16V | LANFUF ; LCNFUF | E | 1587 | TU5JP4 | A | +/- | | 01/06 ▸ | 1330W2 | **734338** | 378,6 568,8 | ALB |
| 10647 ▸ | | | | | | | | | | | | |
| 1.6 i 16V | LANFUF ; LCNFUF | E | 1587 | TU5JP4 | A | +/- | | 03/07 ▸ 07/08 | 1330T5 | •**735598** | 378,6 568,8 | ALB |
| 1.6 i 16V | LANFUF ; LCNFUF | E | 1587 | TU5JP4 | A | +/- | DN6, TSW | 11/04 ▸ 10/05 | 1330G2 | **732908** | 380 551,3 | ALM |
| ▸ 10555 | | | | | | | | | | | | |
| 1.6 THP 16V | LA5FXE ; LC5FXE | E | 1598 | EP6DT | M | +/- | | 07/08 ▸ 06/10 | 1330W2 | **734338** | 378,6 568,8 | ALB |
| 1.6 VTi 16V | LA5FWC ; LC5FWC | E | 1598 | EP6 | M | +/- | | 07/08 ▸ 06/10 | 1330S8 | **735091** | 378,6 562,6 | ALB |
| 1.6 THP 16V,1.6 VTi 16V | LA5/FWF ; LC5/FTF FWF | E | 1598 | EP6,EP6DT | A | +/- | | 07/08 ▸ 06/10 | 1330W2 | **734338** | 378,6 568,8 | ALB |
| 2.0 i 16V | LARFNC ; LCRFNC | E | 1997 | EW10J4 | M | +/- | DN6, TSW | 11/04 ▸ 08/05 | 1330F4 | **732892** | 378 562,8 | ALB |
| 2.0 i 16V | LARFJC ; LCRFJC | E | 1997 | EW10A | M | +/- | | 10/05 ▸ 07/08 | 1330W4 | **734338** | 378,6 568,8 | ALB |
| 2.0 i 16V | LARFJC ; LCRFJC | E | 1997 | EW10A | M | +/- | | 10/05 ▸ | 1330K1 | | 380 562 | ALB |
| 2.0 i 16V | LARFKC | E | 1997 | EW10J4S | M | +/- | | 07/07 ▸ | 1330W7 | | 378 558 | ALB |
| 2.0 i 16V | LCRFJF | E | 1997 | EW10A | A | +/- | | 11/04 ▸ 07/08 | 1330W4 | **734338** | 378,6 568,8 | ALB |
| 2.0 i 16V | LCRFJF | E | 1997 | EW10A | A | +/- | | 11/04 ▸ | 1330K1 | | 380 562 | ALB |
| 2.0 i 16V | LARFKC | E | 1997 | EW10J4S | M | +/- | DN6 LEx+ | 11/04 ▸ 07/07 | 1330G9 | **732894** | 378 562,8 | ALB |
| ▸ 11192 | | | | | | | | | | | | |
| 1.6 HDi 16V | LA9/HY/HYC/HZC/HZH LD9HZC ; LG9HZC ; LC9/HYB/HYC/HZC/HZH | D | 1560 | DV6TED4 | M | +/- | | 11/04 ▸ | 1330K1 | | 380 562 | ALB |
| 1.6 HDi 16V | LA9/HY/HYC/HZC/HZH LD9HZC ; LG9HZC ; LC9/HYB/HYC/HZC/HZH | D | 1560 | DV6ATED4,DV6TED4 | M | +/- | | 11/04 ▸ | 1330F5 | •**735608** | 378 536 | ALB |
| 1.6 HDi 16V | LC9HZ | D | 1560 | DV6TED4 | A | +/- | | 03/06 ▸ | 1330K1 | | 380 562 | ALB |
| 1.6 HDi 16V | LC9HZ | D | 1560 | DV6TED4 | A | +/- | | 03/06 ▸ | 1330F5 | •**735608** | 378 536 | ALB |
| 1.6 HDi 16V | LA9/HVC/HXC LG9HXC ; LC9/HVC/HXC | D | 1560 | DV6ATED4,DV6TED4B | M | +/- | | 05/05 ▸ | 1330S5 | **734338** | 378,6 568,8 | ALB |
| 2.0 HDi 16V | LARHRH ; LCRHRH | D | 1997 | DW10BTED4 | M | +/- | | 11/04 ▸ 04/06 | 1330F5 | •**735608** | 378 536 | ALB |
| 2.0 HDi 16V | LARHRH ; LCRHRH | D | 1997 | DW10BTED4 | M | +/- | | 11/04 ▸ | 1330W2 | **734338** | 378,6 568,8 | ALB |
| 2.0 HDi | LDRHZ | D | 1997 | DW10ATED | M | | DN6 LEx+ | 02/07 ▸ 12/10 | 1330G9 | **732894** | 378 562,8 | ALB |
| 2.0 HDi 16V | LAR/HR ; LCR/HR/HRJ | D | 1997 | DW10BTED4 | A | +/- | | 11/04 ▸ | 1330W2 | **734338** | 378,6 568,8 | ALB |
| 2.0 HDi 16V | LARHR ; LCRHR | D | 1997 | DW10BTED4 | A | + | | 11/04 ▸ 04/06 | 1330F5 | •**735608** | 378 536 | ALB |

## C4 (2011>)

| | | | | | | | | | | | | |
|---|---|---|---|---|---|---|---|---|---|---|---|---|
| 1.4 VTi 95 16V | NC8FP0 | E | 1397 | EP3C | M | +/- | | 01/11 ▸ | 1330W2 | **734338** | 378,6 568,8 | ALB |
| 1.6 THP 155 16V<br>1.6 VTi 120 16V | NC5/FS0/FV8 | E | 1598 | EP6C,EP6CDT | M | +/- | | 01/11 ▸ | 1330W2 | **734338** | 378,6 568,8 | ALB |
| 1.6 VTi 120 16V | NC5FS9 | E | 1598 | EP6C | A | +/- | | 01/11 ▸ | 1330W2 | **734338** | 378,6 568,8 | ALB |
| 1.6 HDi 110,1.6 HDi 90<br>1.6 e-HDi 110 | NC9/HP0/HR8 | D | 1560 | DV6C,DV6DTED | M | +/- | | 01/11 ▸ | 1330W2 | **734338** | 378,6 568,8 | ALB |
| 2.0 HDi 150 16V | NCRHE8 | D | 1997 | DW10CTED4 | M | +/- | | 01/11 ▸ | 1330W2 | **734338** | 378,6 568,8 | ALB |

## C4 PICASSO (2006>)

| | | | | | | | | | | | | |
|---|---|---|---|---|---|---|---|---|---|---|---|---|
| 1.6 i THP 16V | UA5/FWC/FXH ; UD5 FWC/FXH | E | 1598 | EP6,EP6DT | M | | | 06/08 ▸ | 1330W2 | **734338** | 378,6 568,8 | ALB |
| 1.6 i THP 16V | UA5FTF ; UD5FTF | E | 1598 | EP6DT | A | | | 06/08 ▸ | 1330W2 | **734338** | 378,6 568,8 | ALB |
| 1.8 i 16V | UA6FYC ; UD6FYC | E | 1749 | EW7A | M | +/- | | 09/06 ▸ | 1330K1 | | 380 562 | ALB |
| 1.8 i 16V | UA6FYC ; UD6FYC | E | 1749 | EW7A | M | | | 09/06 ▸ | 1330W4 | **734338** | 378,6 568,8 | ALB |
| 2.0 i 16V | UARFJH ; UDRFJH | E | 1997 | EW10A | M | +/- | | 09/06 ▸ | 1330K1 | | 380 562 | ALB |
| 2.0 i 16V | UARFJH ; UDRFJH | E | 1997 | EW10A | M | | | 09/06 ▸ | 1330W4 | **734338** | 378,6 568,8 | ALB |
| 1.6 HDi 16V | UA9/HZC/HZH ; UD9 HZC/HZH | D | 1560 | DV6TED4 | M | +/- | | 09/06 ▸ 01/08 | 1330S5 | **734338** | 378,6 568,8 | ALB |
| 1.6 HDi 16V | UA9/HZC/HZH ; UD9 HZC/HZH | D | 1560 | DV6TED4 | M | +/- | | 03/07 ▸ | 1330W2 | **734338** | 378,6 568,8 | ALB |
| 1.6 HDi 16V | UA9/HYB/HYC/HZC/HZH UD9/HYB/HYC/HZC | D | 1560 | DV6TED4 | M | | | 09/06 ▸ | 1330W2 | **734338** | 378,6 568,8 | ALB |
| 1.6 HDi 16V | UA9/HYB/HYC/HZC/HZH UD9/HYB/HYC/HZC/HZH | D | 1560 | DV6TED4 | M | | | 09/06 ▸ 01/08 | 1330S5 | **734338** | 378,6 568,8 | ALB |
| 2.0 HDi 16V | UARHRH ; UDRHRH | D | 1997 | DW10BTED4 | M | +/- | | 01/08 ▸ | 1330W2 | **734338** | 378,6 568,8 | ALB |
| 11376 ▸ | | | | | | | | | | | | |
| 2.0 HDi 16V | UAR/HJH/HRF ; UDR HJH/HRF | D | 1997 | DW10BTED4 | M | | | 09/06 ▸ | 1330W2 | **734338** | 378,6 568,8 | ALB |
| 2.0 HDi 16V | UAR/HJH/HRF ; UDR HJH/HRF | D | 1997 | DW10BTED4 | M | | | 09/06 ▸ 01/08 | 1330S5 | **734338** | 378,6 568,8 | ALB |
| 2.0 HDi 16V | UDRHRJ | D | 1997 | DW10BTED4 | A | +/- | | 03/07 ▸ | 1330W2 | **734338** | 378,6 568,8 | ALB |
| 2.0 HDi 16V | UDRHRJ | D | 1997 | DW10BTED4 | A | +/- | | 03/07 ▸ 01/08 | 1330S5 | **734338** | 378,6 568,8 | ALB |
| 2.0 HDi 16V | UARHRJ ; UDRHRJ | D | 1997 | DW10BTED4 | A | | | 09/06 ▸ 01/08 | 1330S5 | **734338** | 378,6 568,8 | ALB |
| 2.0 HDi 16V | UARHRJ | D | 1997 | DW10BTED4 | A | | | 09/06 ▸ | 1330W2 | **734338** | 378,6 568,8 | ALB |

# CITROEN (.../...)

## C4 PICASSO (2006>) (.../...)

| Type Ctr. | | CC | | | AC | | | OE | Valeo | DIM. | TECH |
|---|---|---|---|---|---|---|---|---|---|---|---|
| 2.0 HDi 16V UARHRH ; UDRHRH | D | 1997 | DW10BTED4 | M | +/- | | 09/06 ▸ 12/07 | 1330S5 | **734338** | 378,6 568,8 | ALB |

## C5 (2001>2004)

| | | | | | | | | | | | |
|---|---|---|---|---|---|---|---|---|---|---|---|
| 1.8 i 16V DC6FZB ; DE6FZB | E | 1749 | EW7J4 | M | +/- | | 02/01 ▸ 08/04 | 133068 | **734278** | 380 550 | ALB |
| 1.8 i 16V DC6FZB | E | 1749 | EW7J4 | M | | | 02/01 ▸ 08/04 | 133070 | **732617** | 603 413,7 | ALB |
| 1.8 i 16V DC6FZE | E | 1749 | EW7J4 | A | + | | 02/01 ▸ 08/04 | 133064 | **734279** | 542 580 | ALB |
| 1.8 i 16V DC6/FZE/FZF | E | 1749 | EW7J4 | A | + | | 02/01 ▸ 08/04 | 1330R2 | **734279** | 542 580 | ALB |
| 1.8 i 16V DC6/FZE/FZF | E | 1749 | EW7J4 | A | - | PIP+ | 02/01 ▸ 08/04 | 133091 | •**732600** | 379 562,5 | ALB |
| 2.0 i 16V DCR/FNB/FNC ; DER FNB/FNC | E | 1997 | EW10J4 | M | +/- | | 02/01 ▸ 08/04 | 133063 | **732598** | 379 562,5 | ALB |
| 2.0 i 16V DCR/FNB/FNC ; DER FNB/FNC | E | 1997 | EW10J4 | M | +/- | | 02/01 ▸ 08/04 | 1330R1 | **734281** | 380 558 | ALB |
| 2.0 HPi 16V DCR/LZB ; DER/LZB LZC | E | 1997 | EW10D | M | + | | 02/01 ▸ 08/04 | 133078 | **734280** | 380 558 | ALB |
| 2.0 i 16V DCRFNF | E | 1997 | EW10J4 | A | +/- | PIP+ | 02/01 ▸ 08/04 | 133091 | •**732600** | 379 562,5 | ALB |
| 2.0 i 16V DCR/FNE/FNF ; DER FNE/FNF | E | 1997 | EW10J4 | A | +/- | | 02/01 ▸ 08/04 | 1330R2 | **734279** | 542 580 | ALB |
| 2.0 i 16V DCR/FNE/FNF ; DER FNE/FNF | E | 1997 | EW10J4 | A | +/- | 2xLEx+ | 02/01 ▸ 08/04 | 133077 | | 378,6 562,5 | ALB |
| 2.0 i 16V DCR/FNE/FNF ; DER FNE/FNF | E | 1997 | EW10J4 | A | + | | 02/01 ▸ 08/04 | 133064 | **734279** | 542 580 | ALB |
| 3.0 i V6 24V DCX/FXB/FXC ; DEX FXB/FXC | E | 2946 | ES9J4S | M | + | | 02/01 ▸ 08/04 | 1330K3 | **735068** | 380 707 | ALB |
| 3.0 i V6 24V DCX/FXE/FXF ; DEX FXE/FXF | E | 2946 | ES9J4S | A | + | | 02/01 ▸ 08/04 | 1330K3 | **735068** | 380 707 | ALB |
| 3.0 i V6 24V DCX/FXB/FXC ; DEX FXB/FXC ▸ 9625 | E | 2946 | ES9J4S | M | + | | 02/01 ▸ 03/03 | 1331LK | **734336** | 380 694 | CBS |
| 2.0 HDi DCR/HYB/HZB ; DER HSB/HYB/HZB | D | 1997 | DW10ATED,DW10TD | M | +/- | | 02/01 ▸ 08/04 | 1331FT | **732598** | 379 562,5 | ALB |
| 2.0 HDi DCR/HZE/HZF ; DER HZE/HZF | D | 1997 | DW10ATED | A | + | | 02/01 ▸ 08/04 | 133064 | **734279** | 542 580 | ALB |
| 2.2 HDi 16V DC4HXB ; DE4HXB | D | 2179 | DW12TED4 | M | + | | 02/01 ▸ 08/04 | 133078 | **734280** | 380 558 | ALB |
| 2.2 HDi 16V DC4HXE ; DE4HXF | D | 2179 | DW12TED4 | A | + | | 02/01 ▸ 08/04 | 1330Q6 | **734282** | 380 558 | ALB |
| 2.2 HDi 16V DC4HXE ; DE4HXF | D | 2179 | DW12TED4 | A | + | | 02/01 ▸ | 133079 | **734282** | 380 558 | ALB |

## C5 (2004>2007)

| | | | | | | | | | | | |
|---|---|---|---|---|---|---|---|---|---|---|---|
| 1.8 i 16V RC6/FYC/FZB/FZC RE6/FYC/FZB/FZC | E | 1749 | EW7A,EW7J4 | M | + | | 09/04 ▸ | 1330J7 | •**735608** | 378 536 | ALB |
| 1.8 i 16V RC6/FYC/FZB/FZC RE6/FYC/FZB/FZC | E | 1749 | EW7A,EW7J4 | M | | | 09/04 ▸ 06/08 | 1330W2 | **734338** | 378,6 568,8 | ALB |
| 2.0 i 16V RCRFJC ; RERFJC | E | 1997 | EW10A | M | + | | 09/04 ▸ 06/08 | 1330F5 | •**735608** | 378 536 | ALB |
| 2.0 i 16V RCRFJC ; RERFJC | E | 1997 | EW10A | M | | | 09/04 ▸ 06/08 | 1330W2 | **734338** | 378,6 568,8 | ALB |
| 2.0 i 16V RCRFJF ; RERFJF | E | 1997 | EW10A | A | + | | 09/04 ▸ | 1330J8 | **734463** | 378,6 558,2 | ALB |
| 3.0 i V6 24V RCXFUJ ; REXFUJ | E | 2946 | ES9A | A | + | | 09/04 ▸ 03/08 | 1330K8 | **734452** | 380 704 | ALB |
| 1.6 HDi 16V RC9/HYB/HZC ; RE9 HYB/HZC | D | 1560 | DV6TED4 | M | + | | 09/04 ▸ | 1330J9 | **734366** | 378 558 | ALB |
| 2.0 HDi 16V RCR/HRG/HRH ; RER HRG/HRH | D | 1997 | DW10BTED4 | M | + | | 09/04 ▸ 03/08 | 1330F5 | •**735608** | 378 536 | ALB |
| 2.0 HDi 16V RCR/HLH/HRG/HRH RER/HLH/HRG/HRH | D | 1997 | DW10BTED4 | M | | | 09/04 ▸ 03/08 | 1330W2 | **734338** | 378,6 568,8 | ALB |
| 2.0 HDi 16V RCRHRJ ; RERHRJ | D | 1997 | DW10BTED4 | A | | | 11/05 ▸ 03/08 | 1330T1 | **734463** | 378,6 558,2 | ALB |
| 2.0 HDi 16V RCRHRJ ; RERHRG | D | 1997 | DW10BTED4 | A | | | 11/05 ▸ 03/08 | 1330W2 | **734338** | 378,6 568,8 | ALB |

## C5 (2008>)

| | | | | | | | | | | | |
|---|---|---|---|---|---|---|---|---|---|---|---|
| 1.6 THP-155 16V RD5FV8 ; RW5FV8 | E | 1598 | EP6CDT | M | +/- | | 10/09 ▸ | 1330X2 | •**735371** | 569 440 | ALB |
| 1.6 THP-155 16V RD5FVA ; RW5FVA | E | 1598 | EP6CDT | A | +/- | | 04/10 ▸ | 1330X2 | •**735371** | 569 440 | ALB |
| 1.8 i 16V RD6FYC ; RW6FYC | E | 1749 | EW7A | M | + | | 03/08 ▸ | 1330W2 | **734338** | 378,6 568,8 | ALB |
| 2.0 i 16V RDRFJC ; RWRFJC | E | 1997 | EW10A | M | + | | 03/08 ▸ | 1330S5 | **734338** | 378,6 568,8 | ALB |
| 2.0 i 16V RDRFJF ; RWRFJF | E | 1997 | EW10A | A | + | | 03/08 ▸ | 1330T1 | **734463** | 378,6 558,2 | ALB |
| 3.0 i V6 RDXFVJ | E | 2946 | ES9A | A | + | | 03/08 ▸ | 1330K8 | **734452** | 380 704 | ALB |
| 1.6 HDi 110 RD9HR ; RW9HR | D | 1560 | DV6C | M | +/- | | 10/10 ▸ | 1330X2 | •**735371** | 569 440 | ALB |
| 2.0 HDi RDRHRH ; RWRHRH | D | 1997 | DW10BTED4 | M | + | | 03/08 ▸ | 1330W2 | **734338** | 378,6 568,8 | ALB |
| 2.0 HDi RDRHRJ ; RWRHRJ | D | 1997 | DW10BTED4 | A | + | | 03/08 ▸ | 1330T1 | **734463** | 378,6 558,2 | ALB |
| 2.7 HDi V6 RDUHZJ ; RWUHZJ | D | 2720 | DT17BTED4 | A | + | | 03/08 ▸ | 1330P7 | | 375 478 | CBS |

## C6

| | | | | | | | | | | | |
|---|---|---|---|---|---|---|---|---|---|---|---|
| 3.0 i V6 24V TDXFVJ | E | 2946 | ES9A | A | + | | 12/05 ▸ | 1330K8 | **734452** | 380 704 | ALB |

Radiator Radiateur Motorkühler Radiatore di raffreddamento Radiator Radyatör Radiador Радиатор vízhűtő Vodní chladič Radiator Ψυγείο



• **New** Nouveau **Nuevo** Novo **Nuovo** Nieuw **Neu** Nowość **Yeni** Новый Νέο **Novy**

| Type Ctr. | | CC | | AC | | | OE | Valeo | DIM. | TECH |
|---|---|---|---|---|---|---|---|---|---|---|
| **CITROEN (.../...)** | | | | | | | | | | |
| **C6 (.../...)** | | | | | | | | | | |
| 2.7 HDi V6 24V TDUHZJ | D | 2720 | DT17BTED4 | A | + | | 12/05 ▸ | 1330P7 | 375 478 | CBS |
| **C8** | | | | | | | | | | |
| 2.0 i 16V EARFNC ; EBRFNC | E | 1997 | EW10J4 | M | + | | 06/02 ▸ 10/05 | 1331ZZ | **732881** | 464 562,8 | ALB |
| 2.0 i 16V EARFNC ; EBRFNC | E | 1997 | EW10J4 | M | - | | 06/02 ▸ 10/05 | 1330A4 | **732830** | 465 551,3 | ALM |
| 2.0 i 16V EBRFNF | E | 1997 | EW10J4 | A | +/- | | 06/02 ▸ 10/05 | 1330H8 | **732944** | 464 563 | ALB |
| 2.0 i 16V EBRFJF | E | 1997 | EW10A | A | | | 02/06 ▸ | 1330J6 | **732945** | 464 563 | ALB |
| 2.2 i 16V EA3FZC ; EB3FZC | E | 2230 | EW12J4 | M | + | | 06/02 ▸ 09/05 | 1330A5 | **732880** | 464 562,8 | ALB |
| 3.0 i V6 24V EAXFWF ; EBXFWF | E | 2946 | ES9J4S | A | + | | 06/02 ▸ 09/05 | 1330K3 | **735068** | 380 707 | ALB |
| 2.0 HDi 16V EARHTB ; EBRHTB | D | 1997 | DW10ATED4 | M | +/- | | 06/02 ▸ 07/06 | 1331ZZ | **732881** | 464 562,8 | ALB |
| 2.0 HDi 16V EAR/HME ; EBR/HME HWB | D | 1997 | DW10ATED4 | A | +/- | | 06/02 ▸ 10/06 | 1330J6 | **732945** | 464 563 | ALB |
| 2.2 HDi 16V EA4/HWB/HWG ; EB4 HWB/HWG | D | 2179 | DW12TED4 | M | +/- | | 06/02 ▸ 06/06 | 1331ZZ | **732881** | 464 562,8 | ALB |
| **CX** | | | | | | | | | | |
| 2.0 MAM/B/D | E | 1985 | M20 | M | - | | 07/74 ▸ 06/79 | 75492024 | 630 322 | ALM |
| 2.0 MAM/P/R/RE | E | 1995 | 829A5,J6RA600 | M | - | | 07/79 ▸ 1989 | 95606693 | 425 380 | ALM |
| 2.2 MANC | E | 2165 | M22 | M | - | | 02/75 ▸ 07/76 | 75492024 | 630 322 | ALM |
| 2.2,2.2 GPL MAN/R/RBC/S | E | 2165 | J6TA500 | M | - | | 07/85 ▸ 1991 | 95606693 | 425 380 | ALM |
| 2.3,2.3 i,2.3 i Injection MAM/E/F/J/K/L/T/V/W X/Y ; MAN/A/E | E | 2347 | M23 | M | + | | 01/76 ▸ 07/83 | 95495122 | 635 368 | CBS |
| 2.3 MAMJ | E | 2347 | M23 | M | - | | 07/76 ▸ 07/79 | 75492024 | 630 322 | ALM |
| 2.5 i Turbo,2.5 i Turbo 2 MAN/K/KC/P | E | 2500 | M25 | M | +/- | | 10/84 ▸ 1989 | 95633532 | 684 358 | CBS |
| 2.5 i MAN/G/GA/J | E | 2500 | M25 | M | + | | 07/83 ▸ 1989 | 95495122 | 635 368 | CBS |
| 2.2 D MAN/G/H | D | 2165 | M22 | M | + | | 11/75 ▸ 06/79 | 95495122 | 635 368 | CBS |
| 2.5 D Turbo,2.5 D Turbo 2 MAN/C/T/U/V | D | 2500 | M25 | M | +/- | | 07/83 ▸ 1991 | 95633532 | 684 358 | CBS |
| 2.5 D MAM/M/N/S | D | 2500 | M25 | M | + | | 02/79 ▸ 1991 | 95495122 | 635 368 | CBS |
| 2.5 D Turbo MAN/B/D | D | 2500 | M25 | M | - | | 04/83 ▸ 03/87 | 95633532 | 684 358 | CBS |
| **DS3** | | | | | | | | | | |
| 1.6 THP 150 16V SA5/FS0/FX8 1.6 VTi 120 16V | E | 1598 | EP6C,EP6DT | M | +/- | | 03/10 ▸ | 1330P9 | •**735608** | 378 536 | ALB |
| 1.6 VTi 120 16V SA5FS9 | E | 1598 | EP6C | A | +/- | | 03/10 ▸ | 1330P9 | •**735608** | 378 536 | ALB |
| 1.6 HDI 110,1.6 HDi 90 SA9/HP0/HP4/HR8 | D | 1560 | DV6C,DV6DTED | M | +/- | | 03/10 ▸ | 1330P9 | •**735608** | 378 536 | ALB |
| **DS4** | | | | | | | | | | |
| 1.6 THP 155 16V,1.6 THP 200 16V 1.6 VTi 120 16V | E | 1598 | EP6C,EP6CDT,EP6CDTX | M | +/- | | 04/11 ▸ | 1330W2 | **734338** | 378,6 568,8 | ALB |
| 1.6 HDi 110,1.6 e-HDi 110 | D | 1560 | DV6C | M | +/- | | 04/11 ▸ | 1330W2 | **734338** | 378,6 568,8 | ALB |
| 2.0 HDi 160 16V | D | 1997 | DW10CTED4 | M | +/- | | 04/11 ▸ | 1330W2 | **734338** | 378,6 568,8 | ALB |
| **EVASION (94>98)** | | | | | | | | | | |
| 1.8 i U6UE | E | 1761 | XU7JP | M | + | TSW | 07/96 ▸ 09/98 | 1301P2 | **731166** | 670 470 | ALM |
| 1.8 i U6UE | E | 1761 | XU7JP | M | - | VCAP TSW | 07/96 ▸ 09/98 | 1301P1 | **731165** | 600 470 | ALM |
| 2.0 i Turbo CT U6UA | E | 1998 | XU10J2TE | M | +/- | TSW | 07/94 ▸ 09/98 | 1301P3 | **731166** | 670 470 | ALM |
| 2.0 i U6UB | E | 1998 | XU10J2C | M | + | TSW | 07/94 ▸ 09/98 | 1301P2 | **731166** | 670 470 | ALM |
| 2.0 i Turbo CT U6UA | E | 1998 | XU10J2TE | M | + | TSW | 07/94 ▸ 09/98 | 1301W7 | **731166** | 670 470 | ALM |
| 2.0 i U6UB | E | 1998 | XU10J2C | M | - | VCAP TSW | 07/94 ▸ 09/98 | 1301P1 | **731165** | 600 470 | ALM |
| 1.9 TD U6U/C/J/J/8/J/T | D | 1905 | XUD9BTF,XUD9TEF,XUD9TF | M | + | TSW | 10/94 ▸ 09/98 | 1301Y7 | **731168** | 670 470 | ALM |
| 1.9 TD U6U/C/J/J/8/J/T | D | 1905 | XUD9BTF,XUD9TEF,XUD9TF | M | - | TSW | 10/94 ▸ 09/98 | 1301Y4 | **731168** | 670 470 | ALM |
| 2.1 TD 12V U6UW | D | 2088 | XUD11BTE | M | + | TSW | 04/96 ▸ 09/98 | 1301Y7 | **731168** | 670 470 | ALM |
| 2.1 TD 12V U6UW | D | 2088 | XUD11BTE | M | - | TSW | 04/96 ▸ 09/98 | 1301Y4 | **731168** | 670 470 | ALM |
| **EVASION (98>2002)** | | | | | | | | | | |
| 1.8 i U6U/E/E/1 | E | 1761 | XU7JP | M | + | TSW | 10/98 ▸ 05/02 | 1301P2 | **731166** | 670 470 | ALM |
| 1.8 i U6U/E/E/1 | E | 1761 | XU7JP | M | - | VCAP TSW | 10/98 ▸ 05/02 | 133073 | **731165** | 600 470 | ALM |
| 1.8 i U6U/E/E/1 ▸ 8210 | E | 1761 | XU7JP | M | - | VCAP TSW | 10/98 ▸ 05/99 | 1301P1 | **731165** | 600 470 | ALM |
| 2.0 i 16V AFRFNC | E | 1997 | EW10J4 | M | +/- | TSW | 07/00 ▸ 05/02 | 1301P3 | **731166** | 670 470 | ALM |
| 2.0 i 16V AFRFNC | E | 1997 | EW10J4 | M | + | TSW | 07/00 ▸ 05/02 | 1301W7 | **731166** | 670 470 | ALM |
| 2.0 i 16V AFRFNC | E | 1997 | EW10J4 | M | - | VCAP TSW | 07/00 ▸ 05/02 | 133073 | **731165** | 600 470 | ALM |
| 2.0 i 16V AFRFNF | E | 1997 | EW10J4 | A | +/- | TSW | 07/00 ▸ 05/02 | 1301W7 | **731166** | 670 470 | ALM |
| 2.0 i Turbo CT U6UA | E | 1998 | XU10J2TE | M | +/- | TSW | 10/98 ▸ 05/02 | 1301P3 | **731166** | 670 470 | ALM |
| 2.0 i,2.0 i 16V AFR/FVB ; U6U/B/B/T | E | 1998 | XU10J2C,XU10J4R | M | + | TSW | 10/98 ▸ 05/02 | 1301P2 | **731166** | 670 470 | ALM |

# CITROEN (.../...)

## EVASION (98>2002) (.../...)

| Type Ctr. | | CC | | AC | | 2+3 | OE | Valeo | DIM. | TECH |
|---|---|---|---|---|---|---|---|---|---|---|
| 2.0 i U6U/B/B/T | E | 1998 | XU10J2C | M | + | TSW | 10/98 ▸ 05/02 | 1301P3 | **731166** | 670 470 | ALM |
| 2.0 i Turbo CT U6UA | E | 1998 | XU10J2TE | M | + | TSW | 10/98 ▸ 05/02 | 1301W7 | **731166** | 670 470 | ALM |
| 2.0 i,2.0 i 16V AFR/FVB ; U6U/B/B/T | E | 1998 | XU10J2C,XU10J4R | M | - | VCAP TSW | 10/98 ▸ 05/02 | 133073 | **731165** | 600 470 | ALM |
| 2.0 i,2.0 i 16V AFR/FVB ; U6U/B/B/T ▸ 8210 | E | 1998 | XU10J2C,XU10J4R | M | - | VCAP TSW | 10/98 ▸ 05/99 | 1301P1 | **731165** | 600 470 | ALM |
| 1.9 TD U6U/C/C/T | D | 1905 | XUD9BTF | M | + | TSW | 10/98 ▸ 05/02 | 1301Y7 | **731168** | 670 470 | ALM |
| 1.9 TD U6U/C/C/T | D | 1905 | XUD9BTF | M | - | TSW | 10/98 ▸ 05/02 | 1301Y4 | **731168** | 670 470 | ALM |
| 2.0 HDi AFRHZA | D | 1997 | DW10ATED | M | +/- | TSW | 08/99 ▸ 05/02 | 133072 | **732692** | 669 470 | ALB |
| 2.0 HDi AFRHZA | D | 1997 | DW10ATED | M | | TSW | 08/99 ▸ 05/02 | 1330E3 | **732692** | 669 470 | ALB |
| 2.0 HDi 16V AFRHWB | D | 1997 | DW10ATED4 | M | | TSW | 01/01 ▸ 05/02 | 1301Y7 | **731168** | 670 470 | ALM |
| 2.1 TD 12V U6U/W/W/T | D | 2088 | XUD11BTE | M | + | TSW | 10/98 ▸ 05/02 | 1301Y7 | **731168** | 670 470 | ALM |
| 2.1 TD 12V U6U/W/W/T | D | 2088 | XUD11BTE | M | - | TSW | 10/98 ▸ 05/02 | 1301Y4 | **731168** | 670 470 | ALM |

## FUKANG

| | | | | | | | | | | | |
|---|---|---|---|---|---|---|---|---|---|---|---|
| 1.4 N2 | E | 1360 | TU3F2 | M | | TSW | 07/93 ▸ | 9607690980 | **816716** | 610 377,5 | ALM |

## SAXO (96>99)

| | | | | | | | | | | | |
|---|---|---|---|---|---|---|---|---|---|---|---|
| 1.0 i S0C/DYF/DZE/DZF ; S3CDZF ; S1C/DYF/DZE/DZF | E | 954 | TU9M | M | +/- | TSW | 03/96 ▸ 08/99 | 1301SQ | **731498** | 390 322 | ALM |
| 1.1 i S0H/DZC/DZE | E | 1124 | TU1M+ | M | +/- | VCAP TSW | 03/96 ▸ 08/99 | 1301SX | **731527** | 530 322 | ALM |
| 1.1 i,1.1 i GPL S0H/DYF/DZC/DZE/DZF DZG/DZW ; S3HDZF ; S1H/DYF/DZC/DZE/DZF/DZG DZW/FXB ; S6H/DZC/DZF | E | 1124 | TU1JP,TU1M+ | M | + | VCAP TSW | 03/96 ▸ 08/99 | 1301SX | **731527** | 530 322 | ALM |
| 1.1 i,1.1 i GPL S0H/DYF/DZC/DZE/DZF DZG/DZW ; S3HDZF ; S1H/DYF/DZC/DZE/DZF/DZG DZW/FXB ; S6H/DZC/DZF | E | 1124 | TU1JP,TU1M+ | M | + | TSW | 03/96 ▸ 08/99 | 1331HQ | **731526** | 530 322 | ALM |
| 1.1 i S0H/DYF/DZC/DZE/DZF/DZG/DZW ; S3HDZF ; S1H DYF/DZC/DZE/DZF/DZG/DZW ; S6H/DZC/DZF | E | 1124 | TU1M+ | M | - | VCAP TSW | 03/96 ▸ 08/99 | 1301TA | **731528** | 390 322 | ALM |
| 1.1 i,1.1 i GPL S0H/DYF/DZC/DZE/DZF DZG/DZW ; S3HDZF ; S1H/DYF/DZC/DZE/DZF/DZG DZW ; S6H/DZC/DZF | E | 1124 | TU1M+ | M | - | TSW | 03/96 ▸ 08/99 | 1301SQ | **731498** | 390 322 | ALM |
| 1.1 i S1HFXB | E | 1124 | TU1JP | M | | TSW | 03/96 ▸ 08/99 | 1301SQ | **731498** | 390 322 | ALM |
| 1.4 i S0KFXF | E | 1360 | TU3JP | M | +/- | VCAP TSW | 03/96 ▸ 08/99 | 1301SX | **731527** | 530 322 | ALM |
| 1.4 i S0K/FWB/FXF/FXG/FXT ; S1K/FXF/FXG/FXT | E | 1360 | TU3JP | M | + | TSW | 03/96 ▸ 08/99 | 1331HQ | **731526** | 530 322 | ALM |
| 1.4 i S0K/FWB/FXF/FXG/FXT ; S1K/FXF/FXG/FXT | E | 1360 | TU3JP | M | + | VCAP TSW | 06/96 ▸ 08/99 | 1301SX | **731527** | 530 322 | ALM |
| 1.4 i S0K/FWB/FXF/FXG/FXT ; S1K/FXF/FXG/FXT | E | 1360 | TU3JP | M | - | VCAP TSW | 03/96 ▸ 08/99 | 1301TA | **731528** | 390 322 | ALM |
| 1.4 i S0K/FWB/FXF/FXG/FXT ; S1K/FXF/FXG/FXT | E | 1360 | TU3JP | M | - | TSW | 03/96 ▸ 08/99 | 1301SQ | **731498** | 390 322 | ALM |
| 1.4 i S0K/FXD ; S1K/FXD/FXT | E | 1360 | TU3JP | A | +/- | TSW | 04/96 ▸ 08/99 | 1331HQ | **731526** | 530 322 | ALM |
| 1.4 i S0K/FXD ; S1K/FXD/FXT | E | 1360 | TU3JP | A | +/- | VCAP TSW | 04/96 ▸ 08/99 | 1301SX | **731527** | 530 322 | ALM |
| 1.6 i,1.6 i 16V S0N/FZF/FZT ; S1N FZF/FZT ; S6N/FXF/FZF | E | 1587 | TU5J4,TU5JP | M | + | VCAP TSW | 03/96 ▸ 08/99 | 1301SX | **731527** | 530 322 | ALM |
| 1.6 i,1.6 i 16V S0N/FZF/FZT ; S1N FZF/FZT ; S6N/FXF/FZF | E | 1587 | TU5J4,TU5JP | M | + | TSW | 03/96 ▸ 08/99 | 1331HQ | **731526** | 530 322 | ALM |
| 1.6 i S0N/FZF/FZT ; S6NFZF ; S1N/FZF/FZT | E | 1587 | TU5JP | M | - | VCAP TSW | 03/96 ▸ 08/99 | 1301TA | **731528** | 390 322 | ALM |
| 1.6 i S0NFZD ; S1NFZD | E | 1587 | TU5JP | A | +/- | VCAP TSW | 06/96 ▸ 08/99 | 133011 | **731527** | 530 322 | ALM |
| 1.5 D S0V/JYF/JZC/JZE/JZF ; S3VJZF ; S1V/JYF/JZC JZE/JZF | D | 1527 | TUD5 | M | +/- | TSW | 05/96 ▸ 08/99 | 1301VT | **731530** | 529 286 | ALB |
| 1.5 D S0VJXB ; S1VJXB | D | 1527 | TUD5B | M | +/- | TSW | 02/99 ▸ 08/99 | 133092 | **731530** | 529 286 | ALB |

## SAXO (99>)

| | | | | | | | | | | | |
|---|---|---|---|---|---|---|---|---|---|---|---|
| 1.4 i GPL | F | 1360 | TU3JP | M | +/- | VCAP TSW | 02/02 ▸ 12/03 | 1330A8 | **731527** | 530 322 | ALM |
| 1.4 i GPL | F | 1360 | TU3JP | M | - | TSW 819752 | 02/02 ▸ 12/03 | 1330A6 | **732807** | 390 322 | ALM |
| 1.0 i S0CDZF ; S1CDZF | E | 954 | TU9M | M | - | TSW | 09/99 ▸ 12/03 | 1301SQ | **731498** | 390 322 | ALM |
| 1.0 i S0CDZF ; S1CDZF ▸ 8882 | E | 954 | TU9M | M | + | VCAP TSW | 09/99 ▸ 03/01 | 1301SX | **731527** | 530 322 | ALM |
| 1.0 i S0CDZF ; S1CDZF ▸ 8882 | E | 954 | TU9M | M | + | TSW | 09/99 ▸ 03/01 | 1331HQ | **731526** | 530 322 | ALM |
| 1.1 i,1.1 i GPL S0H/DZF/FXB S3HFXB ; S1H/DZF/FXB | E | 1124 | TU1JP,TU1M+ | M | +/- | VCAP TSW | 03/01 ▸ 12/03 | 1330A8 | **731527** | 530 322 | ALM |
| 1.1 i,1.1 i GPL S0H/DZF/FXB S3HFXB ; S1H/DZF/FXB | E | 1124 | TU1JP,TU1M+ | M | + | TSW | 09/99 ▸ 03/01 | 1331HQ | **731526** | 530 322 | ALM |

Radiator Radiateur Motorkühler Radiatore di raffreddamento Radiator Radyatör Radiador Радиатор vízhűtő Vodní chladič Radiator Ψυγείο



• **New** Nouveau **Nuevo** Novo **Nuovo** Nieuw **Neu** Nowość **Yeni** Новый Νέο **Nový**

# CITROEN (.../...)

| | Type Ctr. | | CC | | AC | | | OE | Valeo | DIM. | TECH |
|---|---|---|---|---|---|---|---|---|---|---|---|
| **SAXO (99>) (.../...)** | | | | | | | | | | | |
| 1.1 i,1.1 i GPL | S0H/DZF/FXB S3HFXB ; S1H/DZF/FXB | E | 1124 | TU1JP,TU1M+ | M | + | VCAP TSW | 09/99 ▸ 03/01 | 1301SX | **731527** | 530 322 | ALM |
| 1.1 i,1.1 i GPL | S0HDZF ; S1HDZF | E | 1124 | TU1M+ | M | + | VCAP TSW | 03/01 ▸ 12/03 | 1330A8 | **731527** | 530 322 | ALM |
| 1.1 i,1.1 i GPL | S0H/DZF/FXB S3HFXB ; S1H/DZF/FXB | E | 1124 | TU1JP,TU1M+ | M | - | TSW | 09/99 ▸ 03/01 | 1301SQ | **731498** | 390 322 | ALM |
| 1.1 i,1.1 i GPL | S0H/DZF/FXB S3HFXB ; S1H/DZF/FXB | E | 1124 | TU1JP,TU1M+ | M | - | TSW 819752 | 03/01 ▸ 12/03 | 1330A6 | **732807** | 390 322 | ALM |
| 1.1 i,1.1 i GPL ▸ 8882 | S0H/DZF/FXB S3HFXB ; S1H/DZF/FXB | E | 1124 | TU1JP,TU1M+ | M | - | VCAP TSW | 09/99 ▸ 03/01 | 1301TA | **731528** | 390 322 | ALM |
| 1.4 i | S0K/FWB/FXF ; S6KFWB ; S1K/FWB/FXF | E | 1360 | TU3JP | M | +/- | VCAP TSW | 09/99 ▸ 03/01 | 1301SX | **731527** | 530 322 | ALM |
| 1.4 i | S0K/FWB/FXF ; S6KFWB ; S1K/FWB/FXF | E | 1360 | TU3JP | M | +/- | TSW | 09/99 ▸ 03/01 | 1331HQ | **731526** | 530 322 | ALM |
| 1.4 i | S0K/FWB/FXF ; S6KFWB ; S1K/FWB/FXF | E | 1360 | TU3JP | M | +/- | VCAP TSW | 03/01 ▸ 12/03 | 1330A8 | **731527** | 530 322 | ALM |
| 1.4 i | S0KFXF ; S1KFXF | E | 1360 | TU3JP | M | - | TSW | 09/99 ▸ 03/01 | 1301SQ | **731498** | 390 322 | ALM |
| 1.4 i | S0KFXF ; S1KFXF | E | 1360 | TU3JP | M | - | TSW 819752 | 03/01 ▸ 12/03 | 1330A6 | **732807** | 390 322 | ALM |
| 1.4 i | S1KFXD | E | 1360 | TU3JP | A | +/- | TSW | 09/99 ▸ 03/01 | 1331HQ | **731526** | 530 322 | ALM |
| 1.4 i | S1KFXD | E | 1360 | TU3JP | A | +/- | VCAP TSW | 09/99 ▸ 03/01 | 1301SX | **731527** | 530 322 | ALM |
| 1.4 i | S0K/FWL ; S1K/FWL/FXD | E | 1360 | TU3JP | A | + | VCAP TSW | 03/01 ▸ 12/03 | 1330A9 | **731527** | 530 322 | ALM |
| 1.4 i | S0K/FWL ; S1K/FWL/FXD | E | 1360 | TU3JP | A | - | VCAP TSW | 03/01 ▸ 12/03 | 1330A8 | **731527** | 530 322 | ALM |
| 1.4 i ▸ 8882 | S0KFXF ; S1KFXF | E | 1360 | TU3JP | M | - | VCAP TSW | 09/99 ▸ 03/01 | 1301TA | **731528** | 390 322 | ALM |
| 1.4 i ▸ 8882 | S1KFXD | E | 1360 | TU3JP | A | +/- | VCAP TSW | 09/99 ▸ 03/01 | 133011 | **731527** | 530 322 | ALM |
| 1.6 i 16V | S6N/FXB/FXE/FXF | E | 1587 | TU5J4 | M | +/- | TSW | 09/99 ▸ 03/01 | 1331HQ | **731526** | 530 322 | ALM |
| 1.6 i,1.6 i 16V | S6N/FTB/FXB/FXE/FXF FZF | E | 1587 | TU5J4,TU5JP | M | +/- | VCAP TSW | 03/01 ▸ 12/03 | 1330A8 | **731527** | 530 322 | ALM |
| 1.6 i | S6N/FTB/FZF | E | 1587 | TU5JP | M | - | VCAP TSW | 09/99 ▸ 03/01 | 1301TA | **731528** | 390 322 | ALM |
| 1.5 D | S0V/JXB/JZC/JZF ; S3VJXB ; S1V/JXB/JZF | D | 1527 | TUD5,TUD5B | M | +/- | TSW | 09/99 ▸ 12/03 | 133092 | **731530** | 529 286 | ALB |
| **SYNERGIE (95>98)** | | | | | | | | | | | |
| 1.8 i | U6UE | E | 1761 | XU7JP | M | + | TSW | 07/96 ▸ 09/98 | 1301P2 | **731166** | 670 470 | ALM |
| 1.8 i | U6UE | E | 1761 | XU7JP | M | - | VCAP TSW | 07/96 ▸ 09/98 | 1301P1 | **731165** | 600 470 | ALM |
| 2.0 i | U6UB | E | 1998 | XU10J2C | M | + | TSW | 10/95 ▸ 09/98 | 1301P2 | **731166** | 670 470 | ALM |
| 2.0 i | U6UB | E | 1998 | XU10J2C | M | - | VCAP TSW | 10/95 ▸ 09/98 | 1301P1 | **731165** | 600 470 | ALM |
| 1.9 TD | U6U/C/J | D | 1905 | XUD9BTF,XUD9TEF | M | + | TSW | 10/95 ▸ 09/98 | 1301Y7 | **731168** | 670 470 | ALM |
| **SYNERGIE (98>2002)** | | | | | | | | | | | |
| 2.0 i 16V | AFRFNC | E | 1997 | EW10J4 | M | + | TSW | 07/00 ▸ 05/02 | 1301P3 | **731166** | 670 470 | ALM |
| 2.0 i 16V | AFRFNC | E | 1997 | EW10J4 | M | - | VCAP TSW | 07/00 ▸ 05/02 | 133073 | **731165** | 600 470 | ALM |
| 2.0 i 16V | AFRFNF | E | 1997 | EW10J4 | A | +/- | TSW | 07/00 ▸ 05/02 | 1301P3 | **731166** | 670 470 | ALM |
| 2.0 i | U6UB | E | 1998 | XU10J2C | M | + | TSW | 10/98 ▸ 05/02 | 1301P2 | **731166** | 670 470 | ALM |
| 2.0 i | U6UB | E | 1998 | XU10J2C | M | - | VCAP TSW | 10/98 ▸ 05/02 | 133073 | **731165** | 600 470 | ALM |
| 2.0 i | U6UB | E | 1998 | XU10J2C | M | - | VCAP TSW | 10/98 ▸ | 1301P1 | **731165** | 600 470 | ALM |
| 1.9 TD | U6UC | D | 1905 | XUD9BTF | M | - | TSW | 10/98 ▸ 05/02 | 1301Y4 | **731168** | 670 470 | ALM |
| 2.0 HDi | AFRHZA | D | 1997 | DW10ATED | M | +/- | TSW | 08/99 ▸ 05/02 | 1301Y7 | **731168** | 670 470 | ALM |
| 2.0 HDi | AFRHZA | D | 1997 | DW10ATED | M | | TSW | 08/99 ▸ 05/02 | 1330E3 | **732692** | 669 470 | ALB |
| **VISA** | | | | | | | | | | | |
| 1.0 | VDPC | E | 954 | XV8 | M | | TSW | 11/83 ▸ 1987 | 95606691 | **883464** | 380 322 | ALM |
| 1.1 | VDV/G/GB/GE/K/KB | E | 1124 | XW7,XW7B1 | M | + | TSW | 07/83 ▸ 1988 | 95606692 | **883715** | 510 322 | ALM |
| 1.1 | VDV/G/GB/GE/K/KB | E | 1124 | XW7,XW7B1 | M | | TSW | 07/83 ▸ 1988 | 95606691 | **883464** | 380 322 | ALM |
| 1.1 | VDV/B/BG/G/GD | E | 1124 | XM7,XW7,XW7B1,XW7B2 | M | + | TSW | 10/78 ▸ 1988 | 95606692 | **883715** | 510 322 | ALM |
| 1.1 | VDV/B/BG/G/GD | E | 1124 | XM7,XW7,XW7B1,XW7B2 | M | | TSW | 10/78 ▸ 1988 | 95606691 | **883464** | 380 322 | ALM |
| 1.2 | VDV/E/H/L | E | 1219 | 129 | M | + | TSW | 07/80 ▸ 07/83 | 95606692 | **883715** | 510 322 | ALM |
| 1.2 | VDV/E/H/L | E | 1219 | 129 | M | | TSW | 07/80 ▸ 07/83 | 95606691 | **883464** | 380 322 | ALM |
| 1.4 | VDVS ; VDP/E/EA | E | 1360 | XY7,XY8 | M | | TSW | 03/82 ▸ 1988 | 95606692 | **883715** | 510 322 | ALM |

# CITROEN (.../...)

## VISA (.../...)

| | | | CC | | AC | | | OE | Valeo | DIM. | TECH |
|---|---|---|---|---|---|---|---|---|---|---|---|
| 1.4,1.4 i | VDV/R/RB | E | 1360 | 150,156,XY7,XY7CP | M | | TSW | 03/81 ▸ 1987 | 95606692 | **883715** | 510 322 | ALM |

## XANTIA (93>97)

| | | | | | | | | | | | | |
|---|---|---|---|---|---|---|---|---|---|---|---|---|
| 1.8 i GPL 16V | X15C/G | F | 1761 | XU7JP4-G | M | + | TSW | 07/95 ▸ 12/97 | 133019 | **730958** | 610 386 | ALB |
| 1.8 i GPL 16V | X15C/G | F | 1761 | XU7JP4-G | M | - | TSW | 07/95 ▸ 12/97 | 1301GG | **731298** | 610 377,5 | ALM |
| 1.6 i | X12B | E | 1580 | XU5JP | M | + | TSW | 08/93 ▸ 12/97 | 133019 | **730958** | 610 386 | ALB |
| 1.6 i | X12B | E | 1580 | XU5JP | M | - | EXP, TSW | 08/93 ▸ 03/95 | 96104142 | **730957** | 610 377,5 | ALM |
| 1.6 i | X12B | E | 1580 | XU5JP | M | - | TSW | 03/95 ▸ 12/97 | 1301GG | **731298** | 610 377,5 | ALM |
| 1.8 i,1.8 i 16V | X11/A/E ; X13H X14C ; X15C ; X12/A/E/F/H ; X17A ; X16/C/G | E | 1761 | XU7JB,XU7JP,XU7JP4 | M | + | TSW | 03/93 ▸ 12/97 | 133019 | **730958** | 610 386 | ALB |
| 1.8 i | X11A ; X17A | E | 1761 | XU7JP | M | - | EXP, TSW | 03/93 ▸ 03/95 | 96104142 | **730957** | 610 377,5 | ALM |
| 1.8 i,1.8 i 16V | X11/A/E ; X13H X14C ; X15C ; X12/A/E/F/H ; X17A ; X16/C/G | E | 1761 | XU7JB,XU7JP,XU7JP4 | M | - | TSW | 03/93 ▸ 12/97 | 1301GG | **731298** | 610 377,5 | ALM |
| 1.8 i 6715 ▸ | X19B | E | 1761 | XU7JP | A | - | TSW | 03/95 ▸ 12/97 | 1301GG | **731298** | 610 377,5 | ALM |
| 2.0 i 16V | X14/A/F ; X15/A/F | E | 1998 | XU10J4 | M | + | | 03/93 ▸ 12/97 | 133018 | | 610 386 | ALB |
| 2.0 i,2.0 i 16V | X13/C/E ; X15A ; X14 A/C ; X19/C/E | E | 1998 | XU10J2C,XU10J4R | M | + | TSW | 03/93 ▸ 12/97 | 133019 | **730958** | 610 386 | ALB |
| 2.0 i 16V | X14F | E | 1998 | XU10J4 | M | + | TSW | 08/93 ▸ 06/95 | 1301M7 | **730958** | 610 386 | ALB |
| 2.0 i 16V | X14/A/F ; X15/A/F | E | 1998 | XU10J4 | M | - | EXP, TSW | 03/93 ▸ 12/97 | 96107231 | **730960** | 610 377,5 | ALM |
| 2.0 i 16V | X15/A/F | E | 1998 | XU10J4 | M | - | TSW | 03/93 ▸ 06/95 | 1301M7 | **730958** | 610 386 | ALB |
| 2.0 i | X14/A/C | E | 1998 | XU10J2C | M | - | EXP, TSW | 03/93 ▸ 03/95 | 96104142 | **730957** | 610 377,5 | ALM |
| 2.0 i,2.0 i 16V | X13/C/E ; X15A ; X14 A/C ; X19/C/E | E | 1998 | XU10J2C,XU10J4R | M | - | TSW | 03/95 ▸ 12/97 | 1301GG | **731298** | 610 377,5 | ALM |
| 2.0 i Turbo CT | X11/F ; X16/D/E | E | 1998 | XU10J2TE | M | - | TSW | 07/95 ▸ 12/97 | 1301GL | **731297** | 607 414,5 | ALM |
| 2.0 i Turbo CT | X11D | E | 1998 | XU10J2TE | M | | TSW | 07/95 ▸ 12/97 | 1301GL | **731297** | 607 414,5 | ALM |
| 2.0 i | X15E | E | 1998 | XU10J2C | A | + | TSW | 07/95 ▸ 12/97 | 133019 | **730958** | 610 386 | ALB |
| 2.0 i 6715 ▸ | X15E ; X17B | E | 1998 | XU10J2C | A | - | TSW | 03/95 ▸ 12/97 | 1301GG | **731298** | 610 377,5 | ALM |
| 1.9 D,1.9 SD | X13A ; X14H ; X16A X12/D | D | 1905 | XUD9A,XUD9SD | M | + | | 06/93 ▸ 12/97 | 133018 | | 610 386 | ALB |
| 1.9 D,1.9 SD | X14H ; X16A ; X12/D | D | 1905 | XUD9A,XUD9SD | M | + | TSW | 06/93 ▸ 12/97 | 1301M7 | **730958** | 610 386 | ALB |
| 1.9 TD | X18E ; X17/E/E/T | D | 1905 | XUD9BTF | M | + | TSW | 09/96 ▸ 12/97 | 1301GL | **731297** | 607 414,5 | ALM |
| 1.9 SD,1.9 TD | X14H ; X12/D ; X17/E E/T/F/T/F ; X18/A/E | D | 1905 | XUD9BTF,XUD9SD,XUD9TEF | M | - | TSW | 06/93 ▸ 12/97 | 1301FY | **730982** | 607 414,5 | ALM |
| 1.9 D | X16A | D | 1905 | XUD9A | M | - | EXP, TSW | 06/93 ▸ 04/94 | 96107231 | **730960** | 610 377,5 | ALM |
| 1.9 D | X13A ; X16A | D | 1905 | XUD9A | M | - | TSW 819755 | 04/94 ▸ 12/97 | 1301N9 | **731009** | 610 377,5 | ALM |
| 1.9 SD | X12D ; X14H | D | 1905 | XUD9SD | M | - | | 09/96 ▸ 12/97 | 133016 | | 610 414,5 | ALM |
| 1.9 TD | X18A | D | 1905 | XUD9TEF | M | - | TSW | 05/97 ▸ 12/97 | 1301GL | **731297** | 607 414,5 | ALM |
| 1.9 D | X13/C/L | D | 1905 | XUD9A | A | + | | 08/93 ▸ 04/94 | 133018 | | 610 386 | ALB |
| 1.9 D | X13/C/L | D | 1905 | XUD9A | A | + | TSW | 08/93 ▸ 12/97 | 1301M7 | **730958** | 610 386 | ALB |
| 1.9 D | X13/C/L | D | 1905 | XUD9A | A | - | EXP, TSW | 08/93 ▸ 04/94 | 96107231 | **730960** | 610 377,5 | ALM |
| 1.9 D | X13/C/L | D | 1905 | XUD9A | A | - | | 04/94 ▸ 12/97 | 1301R5 | | 610 386 | ALB |
| 2.1 TD 12V | X12G ; X13G ; X14G X15G ; X18D ; X11/G | D | 2088 | XUD11BTE | M | - | TSW | 07/95 ▸ 12/97 | 1301GL | **731297** | 607 414,5 | ALM |
| 2.1 TD | X16G | D | 2088 | XUD11BTE | M | | TSW | 07/95 ▸ 09/96 | 1301GL | **731297** | 607 414,5 | ALM |

## XANTIA (97>2002)

| | | | | | | | | | | | | |
|---|---|---|---|---|---|---|---|---|---|---|---|---|
| 1.8 i GPL 16V | X1LFYC ; X2LFYC | F | 1761 | XU7JP4-G | M | + | TSW | 12/97 ▸ 05/02 | 133019 | **730958** | 610 386 | ALB |
| 1.8 i GPL 16V | X1LFYC ; X2LFYC | F | 1761 | XU7JP4-G | M | - | TSW | 12/97 ▸ 05/02 | 1301GG | **731298** | 610 377,5 | ALM |
| 1.6 i | X1BFZF | E | 1580 | XU5JP | M | + | TSW | 12/97 ▸ 05/02 | 133019 | **730958** | 610 386 | ALB |
| 1.6 i | X1BFZF | E | 1580 | XU5JP | M | - | TSW | 12/97 ▸ 05/02 | 1301GG | **731298** | 610 377,5 | ALM |
| 1.8 i,1.8 i 16V | X1L/6AG/FXF/FYB/FYC FYF ; X2L/FXF/FYB/FYC/FYF | E | 1761 | XU7JB,XU7JP,XU7JP4 | M | + | TSW | 12/97 ▸ 05/02 | 133019 | **730958** | 610 386 | ALB |
| 1.8 i,1.8 i 16V | X1L/FXF/FYB/FYC/FYF X2L/FXF/FYB/FYC/FYF | E | 1761 | XU7JB,XU7JP4 | M | - | TSW | 12/97 ▸ 05/02 | 1301GG | **731298** | 610 377,5 | ALM |
| 2.0 i Turbo CT | X2RGXF ; X7RGXF X1R/GXF | E | 1998 | XU10J2TE | M | +/- | TSW | 12/97 ▸ 05/02 | 1301GL | **731297** | 607 414,5 | ALM |
| 2.0 i 16V | X2RFVF ; X7RFVF X1R/FVF/FVG | E | 1998 | XU10J4R | M | + | TSW | 12/97 ▸ 05/02 | 133019 | **730958** | 610 386 | ALB |
| 2.0 i 16V | X2RFVF ; X7RFVF X1R/FVF/FVG | E | 1998 | XU10J4R | M | - | TSW | 12/97 ▸ 05/02 | 1301GG | **731298** | 610 377,5 | ALM |
| 2.0 i 16V | X2RFVM | E | 1998 | XU10J4R | A | | | 12/97 ▸ 05/02 | 1331JP | | 610 414,5 | ALM |
| 1.9 SD | X1DHWF ; X2DHWF | D | 1905 | XUD9SD | M | + | TSW | 12/97 ▸ 05/02 | 1301M7 | **730958** | 610 386 | ALB |
| 1.9 SD,1.9 TD | X1D/HWF/HXF ; X2D HWF/HXF | D | 1905 | XUD9BTF,XUD9SD | M | + | TSW | 12/97 ▸ 05/02 | 1301GL | **731297** | 607 414,5 | ALM |
| 1.9 SD | X1DHWF ; X2DHWF | D | 1905 | XUD9SD | M | + | | 12/97 ▸ 05/02 | 133018 | | 610 386 | ALB |
| 1.9 TD | X1DHXF ; X2DHXF | D | 1905 | XUD9BTF | M | - | TSW | 12/97 ▸ 05/02 | 1301GL | **731297** | 607 414,5 | ALM |
| 1.9 SD | X1DHWF ; X2DHWF | D | 1905 | XUD9SD | M | - | | 12/97 ▸ 05/02 | 133071 | | 610 414,5 | ALM |

Radiator Radiateur Motorkühler Radiatore di raffreddamento Radiator Radyatör Radiador Радиатор vízhűtő Vodní chladič Radiator Ψυγείο



• **New** Nouveau **Nuevo** Novo **Nuovo** Nieuw **Neu** Nowość **Yeni** Новый Νέο **Novy**

## XANTIA (97>2002) (.../...)

| Type Ctr. | | CC | | | AC | | | OE | Valeo | DIM. | TECH |
|---|---|---|---|---|---|---|---|---|---|---|---|
| 1.9 SD,1.9 TD | X1D/HWF/HXF ; X2D HWF/HXF | D | 1905 | XUD9BTF,XUD9SD | M | - | TSW | 12/97 ▸ 05/02 | 1301FY | **730982** | 607 414,5 | ALM |
| 1.9 TD | X1DHXM ; X2DHXM | D | 1905 | XUD9BTF | A | +/- | PIP+ | 12/97 ▸ 05/02 | 133036 | **734455** | 610 398 | CBS |
| 1.9 TD | X1DHXM ; X2DHXM | D | 1905 | XUD9BTF | A | +/- | TSW | 12/97 ▸ 05/02 | 1331X2 | **731010** | 610 377,5 | ALM |
| 1.9 TD | X1DHXM ; X2DHXM | D | 1905 | XUD9BTF | A | - | TSW | 12/97 ▸ 05/02 | 1301FY | **730982** | 607 414,5 | ALM |
| 1.9 SD | X1DHWF ; X2DHWF | D | 1905 | XUD9SD | M | - | | 12/97 ▸ 04/99 | 133016 | | 610 414,5 | ALM |
| ▸ 8192 | | | | | | | | | | | | |
| 2.0 HDi | X2RHZF ; X7RHZF X1R/HZF | D | 1997 | DW10ATED | M | +/- | | 10/98 ▸ 05/02 | 133043 | **732618** | 603 413,7 | ALB |
| 2.0 HDi | X1RHYF ; X2RHYE | D | 1997 | DW10TD | M | +/- | | 05/99 ▸ 05/02 | 133070 | **732617** | 603 413,7 | ALB |
| 2.0 HDi | X2RHYF | D | 1997 | DW10TD | M | | | 05/99 ▸ 05/02 | 133070 | **732617** | 603 413,7 | ALB |
| 2.0 HDi | X1RHZB | D | 1997 | DW10ATED | M | | | 09/00 ▸ 05/02 | 133043 | **732618** | 603 413,7 | ALB |
| 2.1 TD 12V | X2P8CF ; X7P8CF X1P/8CF | D | 2088 | XUD11BTE | M | +/- | TSW | 12/97 ▸ 05/02 | 1301GL | **731297** | 607 414,5 | ALM |

## XM (89>94)

| | | | | | | | | | | | | |
|---|---|---|---|---|---|---|---|---|---|---|---|---|
| 2.0 i Turbo CT | Y3A/X/Y | E | 1998 | XU10J2TE | M | +/- | TSW | 09/92 ▸ 06/94 | 133002 | **730934** | 632 414,5 | ALM |
| 2.0,2.0 i | Y3A/A/B/C/H/J/P/R/Z | E | 1998 | XU102C,XU10J2,XU10M | M | + | TSW | 05/89 ▸ 06/94 | 133020 | **810836** | 640 386 | ALB |
| 2.0,2.0 i | Y3A/A/B/C/H/J/P/R/Z | E | 1998 | XU102C,XU10J2,XU10M | M | - | TSW | 05/89 ▸ 06/94 | 1300L9 | **816554** | 530 378 | ALM |
| 2.0,2.0 i | Y3A/A/B/C/H/J/P/R/Z | E | 1998 | XU102C,XU10J2,XU10M | M | - | TSW | 05/89 ▸ 06/94 | 1301A1 | **810836** | 640 386 | ALB |
| 2.0 i | Y3ARA | E | 1998 | XU10J2 | A | +/- | TSW | 07/92 ▸ 06/94 | 133020 | **810836** | 640 386 | ALB |
| 2.0 i Turbo CT | Y3A/XA/YA | E | 1998 | XU10J2TE | A | +/- | TSW | 07/92 ▸ 06/94 | 96001830 | **819428** | 640 414,5 | ALM |
| 2.0 i | Y3A/CA/HA/RA | E | 1998 | XU10J2 | A | + | TSW | 01/90 ▸ 06/94 | 1300N0 | **810836** | 640 386 | ALB |
| 2.0 i Turbo CT | Y3A/XA/YA | E | 1998 | XU10J2TE | A | | TSW | 07/92 ▸ 06/94 | 133002 | **730934** | 632 414,5 | ALM |
| 2.0 i | Y3ARA | E | 1998 | XU10J2 | A | | TSW | 07/92 ▸ 06/94 | 1301A1 | **810836** | 640 386 | ALB |
| 3.0 i V6,3.0 i V6 24V | Y3C/M/N/U | E | 2963 | ZPJ,ZPJ4 | M | + | TSW | 05/93 ▸ 06/94 | 1301E5 | **810836** | 640 386 | ALB |
| 3.0 i V6,3.0 i V6 24V | Y3C/M/N/U | E | 2963 | ZPJ,ZPJ4 | M | - | | 05/93 ▸ 06/94 | 96086717 | | 640 386 | ALB |
| 3.0 i V6 | Y3CNA | E | 2963 | ZPJ | A | +/- | 2xPIP+ | 11/93 ▸ 06/94 | 1301R2 | | 640 386 | ALB |
| ▸ 6203 | | | | | | | | | | | | |
| 3.0 i V6 | Y3CNA | E | 2963 | ZPJ | A | + | TSW | 07/93 ▸ 06/94 | 1301E5 | **810836** | 640 386 | ALB |
| 3.0 i V6 | Y3CNA | E | 2963 | ZPJ | A | | | 07/93 ▸ 06/94 | 96086717 | | 640 386 | ALB |
| 3.0 i V6,3.0 i V6 24V | Y3A/D/G/L/W | E | 2975 | ZPJ,ZPJ4 | M | + | TSW | 05/89 ▸ 06/94 | 1301E5 | **810836** | 640 386 | ALB |
| 3.0 i V6,3.0 i V6 24V | Y3A/D/G/L/W | E | 2975 | ZPJ,ZPJ4 | M | - | | 05/89 ▸ 06/94 | 96086717 | | 640 386 | ALB |
| 3.0 i V6 | Y3AGA | E | 2975 | ZPJ | A | +/- | TSW | 05/90 ▸ 05/93 | 1301E5 | **810836** | 640 386 | ALB |
| 3.0 i V6 | Y3AGA | E | 2975 | ZPJ | A | +/- | 2xPIP+ | 05/93 ▸ 06/94 | 1301R2 | | 640 386 | ALB |
| 3.0 i V6 | Y3AWA | E | 2975 | ZPJ | A | + | TSW | 09/91 ▸ 06/93 | 1301E5 | **810836** | 640 386 | ALB |
| 3.0 i V6 | Y3AWA | E | 2975 | ZPJ | A | | | 09/91 ▸ 06/93 | 96086717 | | 640 386 | ALB |
| 2.1 TD Turbo D12 12V | Y3A/F/K/T | D | 2088 | XUD11ATE | M | +/- | TSW | 11/89 ▸ 06/94 | 96001830 | **819428** | 640 414,5 | ALM |
| 2.1 TD Turbo D12 12V | Y3ATA | D | 2088 | XUD11ATE | A | +/- | TSW | 07/92 ▸ 06/94 | 96001830 | **819428** | 640 414,5 | ALM |
| 2.1 D D12 | Y3A/E/S | D | 2138 | XUD11A | M | +/- | TSW | 09/89 ▸ 06/94 | 1301E5 | **810836** | 640 386 | ALB |

## XM (94>2001)

| | | | | | | | | | | | | |
|---|---|---|---|---|---|---|---|---|---|---|---|---|
| 2.0 i Turbo CT | Y4G/G/M | E | 1998 | XU10J2TE | M | +/- | TSW | 07/94 ▸ 10/95 | 1301Z8 | **731289** | 640 414,5 | ALM |
| 2.0 i Turbo CT | Y4G/G/M | E | 1998 | XU10J2TE | M | +/- | TSW | 07/94 ▸ 04/95 | 133002 | **730934** | 632 414,5 | ALM |
| 2.0 i 16V | Y4GB ; Y4TX ; Y4C/Z | E | 1998 | XU10J4R | M | + | TSW | 07/94 ▸ 07/01 | 1300N0 | **810836** | 640 386 | ALB |
| 2.0 i 16V | Y4GB ; Y4TX ; Y4C/Z | E | 1998 | XU10J4R | M | - | TSW | 07/94 ▸ 07/01 | 1300L9 | **816554** | 530 378 | ALM |
| 2.0 i 16V | Y4GB ; Y4TX ; Y4C/Z | E | 1998 | XU10J4R | M | - | TSW | 07/94 ▸ 07/01 | 1301A1 | **810836** | 640 386 | ALB |
| 2.0 i 16V | Y4T/U/V | E | 1998 | XU10J4R | A | +/- | 2xPIP+ | 07/94 ▸ 07/01 | 1301X5 | | 640 386 | ALB |
| 2.0 i Turbo CT | Y4T/S/T | E | 1998 | XU10J2TE | A | +/- | TSW | 07/94 ▸ 04/95 | 96001830 | **819428** | 640 414,5 | ALM |
| 2.0 i Turbo CT | Y4T/S/T | E | 1998 | XU10J2TE | A | +/- | TSW | 04/95 ▸ 07/01 | 1301Z6 | **731289** | 640 414,5 | ALM |
| 2.0 i 16V | Y4T/U/V | E | 1998 | XU10J4R | A | +/- | | 05/95 ▸ 07/01 | 1301GX | | 640 386 | ALB |
| 2.0 i Turbo CT | Y4G/G/M | E | 1998 | XU10J2TE | M | +/- | TSW | 07/94 ▸ 04/95 | 96001830 | **819428** | 640 414,5 | ALM |
| ▸ 6747 | | | | | | | | | | | | |
| 3.0 i V6 24V | Y4WG | E | 2946 | ES9J4 | M | + | | 07/97 ▸ 07/01 | 133032 | **734760** | 640 398 | CBS |
| 3.0 i V6 24V | Y4W/H/K | E | 2946 | ES9J4 | A | + | | 07/97 ▸ 07/01 | 133032 | **734760** | 640 398 | CBS |
| 3.0 i V6,3.0 i V6 24V | Y4G/N/R/U | E | 2963 | ZPJ,ZPJ4 | M | +/- | TSW | 07/94 ▸ 05/99 | 1301E5 | **810836** | 640 386 | ALB |
| 3.0 i V6 | Y4G/N/R | E | 2963 | ZPJ | M | + | | 07/94 ▸ 06/97 | 96086717 | | 640 386 | ALB |
| 3.0 i V6 24V | Y4GU | E | 2963 | ZPJ4 | M | - | | 07/94 ▸ 06/97 | 96086717 | | 640 386 | ALB |
| 3.0 i V6 | Y4T/N/R | E | 2963 | ZPJ | A | +/- | 2xPIP+ | 07/94 ▸ 04/95 | 1301R2 | | 640 386 | ALB |
| 3.0 i V6 | Y4T/N/R | E | 2963 | ZPJ | A | +/- | | 05/95 ▸ 05/99 | 1301GX | | 640 386 | ALB |
| 2.1 TD Turbo D12 12V | Y4G/X/Y | D | 2088 | XUD11ATE | M | +/- | TSW | 07/94 ▸ 06/95 | 96001830 | **819428** | 640 414,5 | ALM |
| 2.1 TD Turbo D12 12V | Y4G/X/Y | D | 2088 | XUD11ATE | M | +/- | TSW | 06/95 ▸ 06/95 | 1301Z6 | **731289** | 640 414,5 | ALM |
| ▸ 6779 | | | | | | | | | | | | |
| 2.1 TD Turbo D12 12V | Y4GZ ; Y4MZ | D | 2088 | XUD11BTE | M | + | TSW | 07/95 ▸ 07/01 | 1301Z6 | **731289** | 640 414,5 | ALM |
| 2.1 TD Turbo D12 12V | Y4NW ; Y4TD | D | 2088 | XUD11ATE | A | +/- | TSW | 07/94 ▸ 06/95 | 96001830 | **819428** | 640 414,5 | ALM |
| 2.1 TD Turbo D12 12V | Y4NW ; Y4TD | D | 2088 | XUD11ATE | A | +/- | TSW | 06/95 ▸ 06/97 | 1301Z8 | **731289** | 640 414,5 | ALM |
| 2.1 TD Turbo D12 12V | Y4CW ; Y4RN | D | 2088 | XUD11BTE | A | + | TSW | 07/97 ▸ 07/01 | 1301Z6 | **731289** | 640 414,5 | ALM |
| 2.1 D D12 | Y4G/V/W | D | 2138 | XUD11A | M | +/- | TSW | 07/94 ▸ 06/96 | 1301E5 | **810836** | 640 386 | ALB |
| 2.5 TD Turbo D | Y4RM ; Y4N/X/Y | D | 2446 | DK5ATE | M | + | | 07/94 ▸ 07/01 | 1301TF | **731185** | 640 406 | CBS |

# CITROEN (.../...)

## XM (94>2001) (.../...)

| | | | CC | | | AC | | | OE | Valeo | DIM. | TECH |
|---|---|---|---|---|---|---|---|---|---|---|---|---|
| 2.5 TD Turbo D | Y4RM ; Y4N/X/Y | D | 2446 | DK5ATE | M | | | 07/94 ▸ 07/01 | 1301S5 | **731185** | 640 406 | CBS |

## XSARA (97>2000)

| | | | | | | | | | | | | |
|---|---|---|---|---|---|---|---|---|---|---|---|---|
| 1.8 i GPL 16V | N1LFYF ; N2LFYF | F | 1761 | XU7JP4-G | M | +/- | TSW | 09/98 ▸ 08/00 | 133045 | **732535** | 610 377,5 | ALM |
| 1.8 i GPL 16V | N1LFYF ; N2LFYF | F | 1761 | XU7JP4-G | M | | TSW | 07/97 ▸ 09/98 | 1301TH | **730630** | 610 377,5 | ALM |
| 1.4 i,1.4 i GPL | N0K/FXB/FXF/FXG<br>N1K/FXB/FXF/FXG ; N2K/FXB/FXF | E | 1360 | TU3JP | M | + | TSW | 07/97 ▸ 09/98 | 1301TH | **730630** | 610 377,5 | ALM |
| 1.4 i,1.4 i GPL | N0K/FXB/FXF/FXG<br>N1K/FXB/FXF/FXG ; N2K/FXB/FXF | E | 1360 | TU3JP | M | + | TSW | 09/98 ▸ 08/00 | 133045 | **732535** | 610 377,5 | ALM |
| 1.4 i,1.4 i GPL | N0K/FXB/FXF/FXG<br>N1K/FXB/FXF/FXG ; N2K/FXB/FXF | E | 1360 | TU3JP | M | - | TSW | 07/97 ▸ 09/98 | 1301TG | **816715** | 460 377,5 | ALM |
| 1.4 i,1.4 i GPL | N0K/FXB/FXF/FXG<br>N1K/FXB/FXF/FXG ; N2K/FXB/FXF | E | 1360 | TU3JP | M | - | TSW | 09/98 ▸ 08/00 | 133051 | **732534** | 460 377,5 | ALM |
| 1.6 i | N0N/FZF ; N2NFZF ; N1N/FZF/FZG | E | 1587 | TU5JP | M | + | TSW | 07/97 ▸ 09/98 | 1301TH | **730630** | 610 377,5 | ALM |
| 1.6 i | N0N/FZF ; N2NFZF ; N1N/FZF/FZG | E | 1587 | TU5JP | M | + | TSW | 09/98 ▸ 08/00 | 133045 | **732535** | 610 377,5 | ALM |
| 1.6 i | N0N/FZF ; N2NFZF ; N1N/FZF/FZG | E | 1587 | TU5JP | M | - | TSW | 07/97 ▸ 09/98 | 1301TG | **816715** | 460 377,5 | ALM |
| 1.6 i | N0N/FZF ; N2NFZF ; N1N/FZF/FZG | E | 1587 | TU5JP | M | - | TSW | 09/98 ▸ 08/00 | 133051 | **732534** | 460 377,5 | ALM |
| 1.6 i | N1NFZ | E | 1587 | TU5JP | A | | PIP+<br>Plug + | 05/99 ▸ 08/00 | 133049 | **732520** | 610 366 | CBS |
| 1.8 i | N1LFZU | E | 1761 | XU7JP | M | +/- | PIP+<br>Plug + | 05/98 ▸ 08/00 | 133046 | **732520** | 610 366 | CBS |
| 1.8 i 16V,1.8 i GPL 16V | N1LFYF ; N2LFYF<br>N6LFYF ; N0L/FYF | E | 1761 | XU7JP4 | M | +/- | TSW | 09/98 ▸ 08/00 | 133045 | **732535** | 610 377,5 | ALM |
| 1.8 i | N0L/FXF ; N2LFXF ; N1L/FXF/FZU | E | 1761 | XU7JB,XU7JP | M | + | TSW | 07/97 ▸ 09/98 | 1301TH | **730630** | 610 377,5 | ALM |
| 1.8 i | N0L/FXF ; N2LFXF ; N1L/FXF/FZU | E | 1761 | XU7JB,XU7JP | M | + | TSW | 09/98 ▸ 08/00 | 133045 | **732535** | 610 377,5 | ALM |
| 1.8 i | N0LFXF ; N1LFXF | E | 1761 | XU7JB | M | - | TSW | 07/97 ▸ 03/98 | 1301TH | **730630** | 610 377,5 | ALM |
| 1.8 i | N0L/FXF ; N2LFXF ; N1L/FXF/FZU | E | 1761 | XU7JB,XU7JP | M | - | TSW | 03/98 ▸ 09/98 | 1301TG | **816715** | 460 377,5 | ALM |
| 1.8 i | N0L/FXF ; N2LFXF ; N1L/FXF/FZU | E | 1761 | XU7JB,XU7JP | M | - | TSW | 09/98 ▸ 08/00 | 133051 | **732534** | 460 377,5 | ALM |
| 1.8 i 16V,1.8 i GPL 16V | N1LFYF ; N2LFYF<br>N6LFYF ; N0L/FYF | E | 1761 | XU7JP4 | M | | TSW | 07/97 ▸ 09/98 | 1301TH | **730630** | 610 377,5 | ALM |
| 1.8 i | N1LFZM ; N2LFZM ; N0L/FZM | E | 1761 | XU7JP | A | +/- | PIP+<br>Plug + | 09/98 ▸ 08/00 | 133046 | **732520** | 610 366 | CBS |
| 1.8 i | N1LFZM | E | 1761 | XU7JP | A | | | 07/97 ▸ 11/97 | 133004 | | | |
| 1.8 i | N1LFZM ; N2LFZM ; N0L/FZM | E | 1761 | XU7JP | A | | | 11/97 ▸ 09/98 | 133026 | | 610 366 | CBS |
| 1.8 i<br>▸ 7673 | N1LFZM | E | 1761 | XU7JP | A | +/- | TSW | 07/97 ▸ 11/97 | 133045 | **732535** | 610 377,5 | ALM |
| 2.0 i 16V | N1RFVF ; N2RFVF | E | 1998 | XU10J4R | M | +/- | PIP+<br>Plug + | 06/98 ▸ 08/00 | 133049 | **732520** | 610 366 | CBS |
| 2.0 i 16V | N6RFSF | E | 1998 | XU10J4RS | M | | TSW | 01/98 ▸ 09/98 | 1331H9 | **731391** | 610 377,5 | ALM |
| 2.0 i 16V | N1RFVM ; N2RFVM | E | 1998 | XU10J4R | A | +/- | PIP+<br>Plug + | 09/98 ▸ 08/00 | 133046 | **732520** | 610 366 | CBS |
| 2.0 i 16V | N2RFVM | E | 1998 | XU10J4R | A | | | 06/98 ▸ 09/98 | 133026 | | 610 366 | CBS |
| 1.5 D | N1VJZF ; N2VJZF | D | 1527 | TUD5 | M | +/- | TSW | 09/98 ▸ 08/00 | 133056 | **731570** | 670 377,5 | ALM |
| 1.5 D | N1VJZF ; N2VJZF | D | 1527 | TUD5 | M | | TSW | 03/98 ▸ 09/98 | 133010 | **731570** | 670 377,5 | ALM |
| 1.8 D | N0A9AF ; N2A9AF | D | 1769 | XUD7 | M | + | TSW | 03/98 ▸ 09/98 | 133024 | **731743** | 670 377,5 | ALM |
| 1.8 D | N0A9AF ; N2A9AF | D | 1769 | XUD7 | M | + | TSW | 09/98 ▸ 08/00 | 1331CW | **732577** | 670 377,5 | ALM |
| 1.8 D | N0A9AF ; N2A9AF | D | 1769 | XUD7 | M | - | TSW | 03/98 ▸ 09/98 | 133023 | **731744** | 670 377 | ALM |
| 1.8 D | N0A9AF ; N2A9AF | D | 1769 | XUD7 | M | - | PIP+<br>TSW | 09/98 ▸ 08/00 | 133041 | **732517** | 670 377,5 | ALM |
| 1.9 D | N1WJZF ; N2WJZF ; N3WJZF ; N0W/JZF | D | 1868 | DW8 | M | + | TSW | 09/98 ▸ 01/99 | 133042 | **732577** | 670 377,5 | ALM |
| 1.9 D | N1WJZF ; N2WJZF ; N3WJZF ; N0W/JZF | D | 1868 | DW8 | M | + | TSW | 01/99 ▸ 08/00 | 133058 | **732620** | 668,8 377,5 | ALB |
| 1.9 D | N1WJZF ; N2WJZF ; N3WJZF ; N0W/JZF | D | 1868 | DW8 | M | - | PIP+<br>TSW | 09/98 ▸ 08/00 | 133041 | **732517** | 670 377,5 | ALM |
| 1.9 SD | N2D/HVB/HWF | D | 1905 | XUD9BSD,XUD9SD | M | +/- | TSW | 03/98 ▸ 01/99 | 133042 | **732577** | 670 377,5 | ALM |
| 1.9 SD | N2D/HVB/HWF | D | 1905 | XUD9BSD,XUD9SD | M | +/- | TSW | 02/99 ▸ 08/00 | 133058 | **732620** | 668,8 377,5 | ALB |
| 1.9 D,1.9 SD | N1DJYF ; N0D/JYF<br>N2D/HWF/JYF | D | 1905 | XUD9A,XUD9SD | M | + | TSW | 07/97 ▸ 10/98 | 133024 | **731743** | 670 377,5 | ALM |
| 1.9 TD | N1DHYF ; N2DHYF<br>N6DHYF ; N0D/HYF | D | 1905 | XUD9TE | M | + | | 07/97 ▸ 09/98 | 133030 | | 610 366 | CBS |
| 1.9 D | N1DJYF ; N2DJYF ; N0D/JYF | D | 1905 | XUD9A | M | + | TSW | 09/98 ▸ 08/00 | 1331CW | **732577** | 670 377,5 | ALM |
| 1.9 TD | N1DHYF ; N2DHYF<br>N6DHYF ; N0D/HYF | D | 1905 | XUD9TE | M | + | TSW | 09/98 ▸ 08/00 | 133055 | **732518** | 670 366 | CBS |
| 1.9 D | N1DJYF ; N2DJYF ; N0D/JYF | D | 1905 | XUD9A | M | - | TSW | 07/97 ▸ 09/98 | 133023 | **731744** | 670 377 | ALM |
| 1.9 TD | N1DHYF ; N2DHYF<br>N6DHYF ; N0D/HYF | D | 1905 | XUD9TE | M | - | TSW | 07/97 ▸ 09/98 | 133024 | **731743** | 670 377,5 | ALM |
| 1.9 TD | N1DHYF ; N2DHYF<br>N6DHYF ; N0D/HYF | D | 1905 | XUD9TE | M | - | TSW | 03/98 ▸ 01/99 | 1331CW | **732577** | 670 377,5 | ALM |
| 1.9 D,1.9 SD | N1DJYF ; N0D/JYF<br>N2D/HWF/JYF | D | 1905 | XUD9A,XUD9SD | M | - | PIP+<br>TSW | 03/98 ▸ 08/00 | 133041 | **732517** | 670 377,5 | ALM |

Radiator Radiateur Motorkühler Radiatore di raffreddamento Radiator Radyatör Radiador Радиатор vízhűtő Vodní chladič Radiator Ψυγείο



• **New** Nouveau **Nuevo** Novo **Nuovo** Nieuw **Neu** Nowość **Yeni** Новый Νέο **Nový**

# CITROEN (.../...)

## XSARA (97>2000) (.../...)

| Type Ctr. | | CC | | | AC | | | OE | Valeo | DIM. | TECH |
|---|---|---|---|---|---|---|---|---|---|---|---|
| 1.9 TD | N1DHYF ; N2DHYF N6DHYF ; N0D/HYF | D | 1905 | XUD9TE | M | - | TSW | 09/98 ▸ 01/99 | 133042 | **732577** | 670 377,5 | ALM |
| 1.9 TD | N1DHYF ; N2DHYF N6DHYF ; N0D/HYF | D | 1905 | XUD9TE | M | - | TSW | 02/99 ▸ 08/00 | 133058 | **732620** | 668,8 377,5 | ALB |
| 1.9 SD | N1DHVB | D | 1905 | XUD9BSD | M | | TSW | 06/98 ▸ 08/00 | 1331CW | **732577** | 670 377,5 | ALM |
| 2.0 HDi | N1RHYF ; N2RHYF N6RHYF ; N0R/HYF | D | 1997 | DW10TD | M | +/- | TSW | 03/99 ▸ 08/00 | 1330C9 | **732620** | 668,8 377,5 | ALB |
| 2.0 HDi | N1RHYF ; N2RHYF N6RHYF ; N0R/HYF | D | 1997 | DW10TD | M | | TSW | 03/99 ▸ 08/00 | 133058 | **732620** | 668,8 377,5 | ALB |

## XSARA (2000>)

| | | | | | | | | | | | | |
|---|---|---|---|---|---|---|---|---|---|---|---|---|
| 1.4 i | N1KFWB ; N2KFWB ; N0K/FWB | E | 1360 | TU3JP | M | +/- | DN6, TSW | 09/00 ▸ 07/05 | 1330G2 | **732908** | 380 551,3 | ALM |
| 1.4 i | N1KFWB ; N2KFWB ; N0K/FWB | E | 1360 | TU3JP | M | | DN6, TSW | 09/00 ▸ 11/02 | 1330F4 | **732892** | 378 562,8 | ALB |
| 1.4 i | N1KFWB ; N2KFWB ; N0K/FWB | E | 1360 | TU3JP | M | | DN6, TSW | 09/00 ▸ 07/05 | 1330G3 | **732890** | 378 562,5 | ALB |
| 1.4 i ▸ 9491 | N1KFWB ; N2KFWB ; N0K/FWB | E | 1360 | TU3JP | M | +/- | DN6, TSW | 09/00 ▸ 11/02 | 133083 | **732908** | 380 551,3 | ALM |
| 1.6 i 16V | N1NFUB ; N2NFUB N0N/FUB | E | 1587 | TU5JP4 | M | +/- | DN6, TSW | 09/00 ▸ 08/05 | 1330G2 | **732908** | 380 551,3 | ALM |
| 1.6 i 16V | N1NFUB ; N2NFUB N0N/FUB | E | 1587 | TU5JP4 | M | +/- | DN6, TSW | 09/00 ▸ 11/02 | 1330F4 | **732892** | 378 562,8 | ALB |
| 1.6 i 16V | N1NFUB ; N2NFUB N0N/FUB | E | 1587 | TU5JP4 | M | | DN6, TSW | 09/00 ▸ 08/05 | 1330G3 | **732890** | 378 562,5 | ALB |
| 1.6 i 16V | N1NFUN ; N2NFUB N0N/FUN | E | 1587 | TU5JP4 | A | +/- | DN6 LEx+ | 09/00 ▸ 08/05 | 1330F6 | **732893** | 378 562,8 | ALB |
| 1.6 i 16V | N1NFUN ; N2NFUB N0N/FUN | E | 1587 | TU5JP4 | A | +/- | DN6 LEx+ | 09/00 ▸ 08/05 | 1330G4 | **732891** | 378 562,5 | ALB |
| 1.6 i 16V ▸ 9492 | N1NFUN ; N2NFUB N0N/FUN | E | 1587 | TU5JP4 | A | +/- | DN6, TSW | 11/02 ▸ 08/05 | 1330F4 | **732892** | 378 562,8 | ALB |
| 1.6 i 16V ▸ 9491 | N1NFUB ; N2NFUB N0N/FUB | E | 1587 | TU5JP4 | M | +/- | DN6, TSW | 09/00 ▸ 11/02 | 133083 | **732908** | 380 551,3 | ALM |
| 1.6 i 16V ▸ 9491 | N1NFUB ; N2NFUB N0N/FUB | E | 1587 | TU5JP4 | M | +/- | DN6, TSW | 09/00 ▸ 11/02 | 133082 | **732892** | 378 562,8 | ALB |
| 2.0 i 16V | N1RFNB ; N2RFNB N0R/FNB | E | 1997 | EW10J4 | M | +/- | DN6, TSW | 09/00 ▸ 11/02 | 1330F4 | **732892** | 378 562,8 | ALB |
| 2.0 i 16V | N1RFNB ; N2RFNB N0R/FNB | E | 1997 | EW10J4 | M | +/- | DN6, TSW | 09/00 ▸ 11/02 | 1330G3 | **732890** | 378 562,5 | ALB |
| 2.0 i 16V | N1RFN1 ; N2RFN1 N0R/FN1 | E | 1997 | EW10J4 | M | | DN6, TSW | 09/00 ▸ 11/02 | 1330G3 | **732890** | 378 562,5 | ALB |
| 2.0 i 16V | N1RFN1 ; N2RFN1 N0R/FN1 | E | 1997 | EW10J4 | M | | DN6, TSW | 09/00 ▸ 11/02 | 1330F4 | **732892** | 378 562,8 | ALB |
| 2.0 i 16V | N1RFNN ; N2RFNN N0R/FNN | E | 1997 | EW10J4 | A | +/- | DN6, TSW | 09/00 ▸ 08/05 | 1330F4 | **732892** | 378 562,8 | ALB |
| 2.0 i 16V | N1RFNN ; N2RFNN N0R/FNN | E | 1997 | EW10J4 | A | +/- | DN6, TSW | 09/00 ▸ 08/05 | 1330G3 | **732890** | 378 562,5 | ALB |
| 2.0 i 16V | N1RFNN ; N2RFNN N0R/FNN | E | 1997 | EW10J4 | A | +/- | DN6 LEx+ | 09/00 ▸ 08/05 | 1330F6 | **732893** | 378 562,8 | ALB |
| 2.0 i 16V | N1RFNN ; N2RFNN N0R/FNN | E | 1997 | EW10J4 | A | | DN6 LEx+ | 09/00 ▸ 08/05 | 1330F7 | **732895** | 378 562,8 | ALB |
| 2.0 i 16V ▸ 9491 | N1RFNB ; N2RFNB N0R/FNB | E | 1997 | EW10J4 | M | +/- | DN6, TSW | 09/00 ▸ 11/02 | 1331LS | **732892** | 378 562,8 | ALB |
| 2.0 i 16V ▸ 9491 | N1RFNN ; N2RFNN N0R/FNN | E | 1997 | EW10J4 | A | +/- | DN6 LEx+ | 09/00 ▸ 11/02 | 133096 | **732895** | 378 562,8 | ALB |
| 1.4 HDi | N18HZB ; N28HZB N08/HZB | D | 1398 | DV4TD | M | +/- | DN6, TSW | 01/03 ▸ 08/05 | 1330F4 | **732892** | 378 562,8 | ALB |
| 1.9 D | N1WJYB ; N2WJYB ; N0W/JYB | D | 1868 | DW8B | M | +/- | DN6, TSW | 09/00 ▸ | 133082 | **732892** | 378 562,8 | ALB |
| 1.9 D | N1WJYB ; N2WJYB ; N0W/JYB | D | 1868 | DW8B | M | +/- | DN6, TSW | 09/00 ▸ 08/05 | 1330F4 | **732892** | 378 562,8 | ALB |
| 1.9 D ▸ 9491 | N1WJYB ; N2WJYB ; N0W/JYB | D | 1868 | DW8B | M | +/- | DN6, TSW | 09/00 ▸ 11/02 | 1331LS | **732892** | 378 562,8 | ALB |
| 1.9 D ▸ 9491 | N1WJYB ; N2WJYB ; N0W/JYB | D | 1868 | DW8B | M | | DN6, TSW | 04/01 ▸ 11/02 | 133082 | **732892** | 378 562,8 | ALB |
| 2.0 HDi | N1RHYB ; N2RHYB N0R/HYB | D | 1997 | DW10TD | M | +/- | DN6, TSW | 09/00 ▸ 08/05 | 1330F4 | **732892** | 378 562,8 | ALB |
| 2.0 HDi | N1RHZB ; N2RHZB N0R/HZB | D | 1997 | DW10ATED | M | +/- | DN6 LEx+ | 08/01 ▸ 08/05 | 1330G9 | **732894** | 378 562,8 | ALB |
| 2.0 HDi | N6RHYB | D | 1997 | DW10TD | M | | DN6, TSW | 09/00 ▸ 01/05 | 1330F4 | **732892** | 378 562,8 | ALB |

# CITROEN (.../...)

## XSARA (2000>) (.../...)

| | | | CC | | | AC | | | OE | Valeo | DIM. | TECH |
|---|---|---|---|---|---|---|---|---|---|---|---|---|
| 2.0 HDi | N1RHZN ; N2RHZN N0R/HZN | D | 1997 | DW10ATED | A | +/- | DN6 LEx+ | 08/01 ▸ 08/05 | 1330H0 | 732888 | 378,6 562,8 | ALB |
| 2.0 HDi ▸ 9491 | N1RHYB ; N2RHYB N0R/HYB | D | 1997 | DW10TD | M | +/- | DN6, TSW | 09/00 ▸ | 133082 | 732892 | 378 562,8 | ALB |
| 2.0 HDi ▸ 9491 | N1RHYB ; N2RHYB N0R/HYB | D | 1997 | DW10TD | M | +/- | DN6, TSW | 09/00 ▸ 11/02 | 1331LS | 732892 | 378 562,8 | ALB |
| 2.0 HDi | N1RHZN ; N2RHZN N0R/HZN | D | 1997 | DW10ATED | A | +/- | DN6 LEx+ | 08/01 ▸ 11/02 | 1330A3 | 732894 | 378 562,8 | ALB |

## XSARA PICASSO

| | | | | | | | | | | | | |
|---|---|---|---|---|---|---|---|---|---|---|---|---|
| 1.6 i | CHNFZA | E | 1587 | TU5JP | M | +/- | TSW | 12/99 ▸ 03/01 | 1330J3 | 732887 | 380 551,3 | ALM |
| 1.6 i,1.6 i 16V | CHN/FU/FVB/FZA | E | 1587 | TU5JP,TU5JP4 | M | +/- | TSW | 12/99 ▸ | 1330G5 | 732887 | 380 551,3 | ALM |
| 1.6 i | CHNFVB | E | 1587 | TU5JP | M | | TSW | 09/00 ▸ 03/01 | 1330J3 | 732887 | 380 551,3 | ALM |
| 1.6 i | CHN/FVB/FVK | E | 1587 | TU5JP | M | | TSW | 03/01 ▸ 01/07 | 1330G5 | 732887 | 380 551,3 | ALM |
| 1.6 i 16V | CHNFU | E | 1587 | TU5JP4 | M | | DN6, TSW | 09/05 ▸ 05/07 | 1330F4 | 732892 | 378 562,8 | ALB |
| 1.6 i ▸ 8890 | CHNFZA | E | 1587 | TU5JP | M | +/- | TSW | 12/99 ▸ 03/01 | 133069 | 732887 | 380 551,3 | ALM |
| 1.8 i 16V | CH6/FZB/FZC | E | 1749 | EW7J4 | M | + | DN6, TSW | 12/99 ▸ 03/01 | 1330H3 | 732892 | 379 562,8 | ALB |
| 1.8 i 16V | CH6/FZB/FZC | E | 1749 | EW7J4 | M | + | DN6, TSW | 03/01 ▸ 12/05 | 1330F4 | 732892 | 378 562,8 | ALB |
| 1.8 i 16V | CH6/FZB/FZC | E | 1749 | EW7J4 | M | - | TSW | 12/99 ▸ 09/01 | 1330J3 | 732887 | 380 551,3 | ALM |
| 1.8 i 16V 8890 ▸ | CH6FZC | E | 1749 | EW7J4 | M | - | TSW | 03/01 ▸ | 1330C6 | 732887 | 380 551,3 | ALM |
| 1.8 i 16V | CH6/FZB/FZC | E | 1749 | EW7J4 | M | - | TSW | 09/01 ▸ 12/05 | 1330G5 | 732887 | 380 551,3 | ALM |
| 1.8 i 16V ▸ 9071 | CH6/FZB/FZC | E | 1749 | EW7J4 | M | - | TSW | 12/99 ▸ 09/01 | 133069 | 732887 | 380 551,3 | ALM |
| 2.0 i 16V | CHRFNE | E | 1997 | EW10J4 | A | + | DN6 LEx+ | 01/03 ▸ 11/03 | 1330F7 | 732895 | 378 562,8 | ALB |
| 2.0 i 16V | CHRFNE | E | 1997 | EW10J4 | A | | DN6 LEx+ | 01/03 ▸ 11/03 | 1330F6 | 732893 | 378 562,8 | ALB |
| 2.0 HDi | CHR/HYA/HYB | D | 1997 | DW10TD | M | +/- | DN6, TSW | 12/99 ▸ 11/02 | 1330H3 | 732909 | 379 562,8 | ALB |
| 2.0 HDi | CHR/HYA/HYB | D | 1997 | DW10TD | M | +/- | DN6, TSW | 11/02 ▸ 12/05 | 1330F4 | 732892 | 378 562,8 | ALB |
| 2.0 HDi | CHRHYB | D | 1997 | DW10TD | M | + | DN6, TSW | 12/99 ▸ | 133075 | 732909 | 379 562,8 | ALB |
| 2.0 HDi | CHRHYB | D | 1997 | DW10TD | M | + | DN6, TSW | 01/01 ▸ | 1330A1 | 732892 | 378 562,8 | ALB |

## ZX

| | | | | | | | | | | | | |
|---|---|---|---|---|---|---|---|---|---|---|---|---|
| 1.1 | N2A1 | E | 1124 | TU1 | M | + | TSW | 03/91 ▸ 05/92 | 96050670 | 816716 | 610 377,5 | ALM |
| 1.1,1.1 i 5656 ▸ | N2C9 ; N2A/1/3/4/4 T ; N2L/2/2/T/3 | E | 1124 | TU1,TU1M,TU1M+ | M | + | TSW | 04/92 ▸ 07/98 | 133045 | 732535 | 610 377,5 | ALM |
| 1.1,1.1 i | N2C9 ; N2A/1/3/4/4 T ; N2L/2/2/T/3 | E | 1124 | TU1,TU1M,TU1M+ | M | + | TSW | 05/92 ▸ 07/98 | 1301TH | 730630 | 610 377,5 | ALM |
| 1.1,1.1 i | N2C9 ; N2A/1/3/4/4 T ; N2L/2/2/T/3 | E | 1124 | TU1,TU1M,TU1M+ | M | - | TSW | 03/91 ▸ 07/98 | 133051 | 732534 | 460 377,5 | ALM |
| 1.1,1.1 i | N2C9 ; N2A/1/3/4/4 T ; N2L/2/2/T/3 | E | 1124 | TU1,TU1M,TU1M+ | M | - | TSW | 03/91 ▸ 07/98 | 1301TG | 816715 | 460 377,5 | ALM |
| 1.4,1.4 i | N2A/7/9 | E | 1360 | TU3.2,TU3M | M | + | TSW | 03/91 ▸ 05/92 | 96050670 | 816716 | 610 377,5 | ALM |
| 1.4,1.4 i | N2B1 ; N2D7 ; N2A/7 9 ; N2M1 ; N2L/7/9 | E | 1360 | TU3.2,TU3JP,TU3M,TU3MC | M | + | TSW | 05/92 ▸ 07/98 | 133045 | 732535 | 610 377,5 | ALM |
| 1.4,1.4 i | N2B1 ; N2D7 ; N2A/7 9 ; N2E/1/T/9 ; N2M1 ; N2L/7/9 | E | 1360 | TU3.2,TU3JP,TU3M,TU3MC | M | + | TSW | 05/92 ▸ 07/98 | 1301TH | 730630 | 610 377,5 | ALM |
| 1.4,1.4 i | N2B1 ; N2D7 ; N2A/7 9 ; N2E/1/T/9 ; N2M1 ; N2L/7/9 | E | 1360 | TU3.2,TU3JP,TU3M,TU3MC | M | - | TSW | 03/91 ▸ 07/98 | 1301TG | 816715 | 460 377,5 | ALM |
| 1.4,1.4 i | N2B1 ; N2D7 ; N2A/7 9 ; N2E/1/T/9 ; N2M1 ; N2L/7/9 | E | 1360 | TU3.2,TU3JP,TU3M,TU3MC | M | - | TSW | 03/91 ▸ 07/98 | 133051 | 732534 | 460 377,5 | ALM |
| 1.4 | N2E/1/T/9 | E | 1360 | TU3.2 | M | | TSW | 09/92 ▸ 07/94 | 133045 | 732535 | 610 377,5 | ALM |
| 1.6 i | N2G1 ; N2B/2/4/5 | E | 1580 | XU5JP,XU5M,XU5M2 | M | +/- | TSW | 03/91 ▸ 10/93 | 96050670 | 816716 | 610 377,5 | ALM |
| 1.6 i | N2G/1/2 | E | 1580 | XU5JP | M | +/- | TSW | 10/93 ▸ 06/97 | 1301TJ | 730927 | 610 377,5 | ALM |
| 1.6 i | N2G/1/2 | E | 1580 | XU5JP | M | +/- | TSW | 02/94 ▸ 07/98 | 1301TH | 730630 | 610 377,5 | ALM |
| 1.6 i | N2G/1/2 | E | 1580 | XU5JP | M | | TSW | 11/95 ▸ 07/98 | 1301TH | 730630 | 610 377,5 | ALM |
| 1.6 i | N2G1A | E | 1580 | XU5JP | A | +/- | TSW | 10/93 ▸ 11/95 | 1301TL | 730983 | 610 377,5 | ALM |
| 1.6 i 6933 ▸ | N2G1A | E | 1580 | XU5JP | A | +/- | TSW | 11/95 ▸ 06/97 | 1301TH | 730630 | 610 377,5 | ALM |
| 1.6 i | N2G1A | E | 1580 | XU5JP | A | | | 11/95 ▸ 06/97 | 133004 | | | |
| 1.8 i | N2E/3/4 | E | 1761 | XU7JP | M | +/- | TSW | 09/92 ▸ 10/93 | 96050670 | 816716 | 610 377,5 | ALM |
| 1.8 i | N2F2 ; N2E/3/4 | E | 1761 | XU7JP | M | +/- | TSW | 10/93 ▸ 11/95 | 1331RY | 730927 | 610 377,5 | ALM |
| 1.8 i,1.8 i 16V | N2F2 ; N2K9 ; N2E/3 4 | E | 1761 | XU7JP,XU7JP4 | M | +/- | TSW | 07/95 ▸ 07/98 | 1301TH | 730630 | 610 377,5 | ALM |
| 1.8 i | N2E4 | E | 1761 | XU7JP | M | | | 07/96 ▸ 06/97 | 133004 | | | |

Radiator Radiateur Motorkühler Radiatore di raffreddamento Radiator Radyatör Radiador Радиатор vízhűtő Vodní chladič Radiator Ψυγείο



• **New** Nouveau **Nuevo** Novo **Nuovo** Nieuw **Neu** Nowość **Yeni** Новый Νέο **Novy**

| Type Ctr. | | CC | | AC | | | | OE | Valeo | DIM. | TECH |
|---|---|---|---|---|---|---|---|---|---|---|---|

## CITROEN (.../...)

### ZX (.../...)

| | | | | | | | | | | | | |
|---|---|---|---|---|---|---|---|---|---|---|---|---|
| 1.8 i | N2E/3A/4A | E | 1761 | XU7JP | A | +/- | TSW | 09/92 ▸ 10/93 | 96055582 | **730508** | 610 377,5 | ALM |
| 1.8 i | N2H4 ; N2E/3A/4A | E | 1761 | XU7JP | A | +/- | TSW | 10/93 ▸ 11/95 | 1301TL | **730983** | 610 377,5 | ALM |
| 1.8 i | N2H4 | E | 1761 | XU7JP | A | +/- | TSW | 07/95 ▸ 07/98 | 1301TH | **730630** | 610 377,5 | ALM |
| 1.8 i | N2E4A | E | 1761 | XU7JP | A | | TSW | 11/95 ▸ 06/97 | 133045 | **732535** | 610 377,5 | ALM |
| 6933 ▸ | | | | | | | | | | | | |
| 1.8 i | N2H4 ; N2E/3A/4A | E | 1761 | XU7JP | A | | | 11/95 ▸ 07/98 | 133004 | | | |
| 1.9 i | N2B/6/8 | E | 1905 | XU9JA | M | +/- | TSW | 03/91 ▸ 08/92 | 96050671 | **730507** | 610 377,5 | ALM |
| 1.9 i | N2B8A | E | 1905 | XU9JA | A | +/- | TSW | 09/92 ▸ 08/93 | 96055582 | **730508** | 610 377,5 | ALM |
| 2.0 i,2.0 i 16V | N2F1 ; N2J9 ; N2E/6 7 | E | 1998 | XU10J2C,XU10J4 | M | +/- | TSW | 09/92 ▸ 11/93 | 96050671 | **730507** | 610 377,5 | ALM |
| 2.0 i,2.0 i 16V | N2F1 ; N2J9 ; N2E/6 7 | E | 1998 | XU10J2C,XU10J4 | M | +/- | TSW | 11/93 ▸ 07/98 | 1301TK | **730985** | 610 377,5 | ALM |
| 2.0 i,2.0 i 16V | N2F1 ; N2J9 ; N2E/6 7 | E | 1998 | XU10J2C,XU10J4 | M | +/- | TSW | 11/93 ▸ 05/95 | 1301L2 | **730985** | 610 377,5 | ALM |
| 2.0 i 16V | N2L1 | E | 1998 | XU10J4RS | M | +/- | TSW | 07/95 ▸ 07/98 | 1331H9 | **731391** | 610 377,5 | ALM |
| 2.0 i | N2E/6/7 | E | 1998 | XU10J2C | M | +/- | TSW | 10/95 ▸ 07/98 | 1301TH | **730630** | 610 377,5 | ALM |
| 6909 ▸ | | | | | | | | | | | | |
| 2.0 i | N2E/6/7 | E | 1998 | XU10J2C | M | +/- | TSW | 10/95 ▸ 07/98 | 133003 | **731389** | 610 377,5 | ALM |
| 2.0 i | N2E8 | E | 1998 | XU10J2C | M | | TSW | 09/92 ▸ 11/93 | 96050671 | **730507** | 610 377,5 | ALM |
| 2.0 i | N2E8 | E | 1998 | XU10J2C | M | | TSW | 11/93 ▸ 10/95 | 1301TK | **730985** | 610 377,5 | ALM |
| 2.0 i | N2E8 | E | 1998 | XU10J2C | M | | TSW | 10/95 ▸ 07/98 | 133003 | **731389** | 610 377,5 | ALM |
| 2.0 i | N2J3 | E | 1998 | XU10J2C | A | +/- | TSW | 09/92 ▸ 12/95 | 1301TL | **730983** | 610 377,5 | ALM |
| 2.0 i | N2J3 | E | 1998 | XU10J2C | A | +/- | TSW | 12/95 ▸ 07/98 | 1301TH | **730630** | 610 377,5 | ALM |
| 6965 ▸ | | | | | | | | | | | | |
| 2.0 i | N2J3 | E | 1998 | XU10J2C | A | | | 12/95 ▸ 07/98 | 133004 | | | |
| 1.4 D | N2H6 | D | 1360 | TUD3 | M | +/- | TSW | 07/94 ▸ 07/98 | 1301S0 | **731012** | 610 377,5 | ALM |
| 1.5 D | N2M3 | D | 1527 | TUD5 | M | +/- | TSW | 07/94 ▸ 07/98 | 1301S0 | **731012** | 610 377,5 | ALM |
| 1.8 D | N2C2/T | D | 1769 | XUD7 | M | + | TSW | 09/92 ▸ 10/93 | 96050671 | **730507** | 610 377,5 | ALM |
| 1.8 D | N2C2/T | D | 1769 | XUD7 | M | + | TSW | 10/93 ▸ 12/93 | 1301TK | **730985** | 610 377,5 | ALM |
| 1.8 D | N2C2/T | D | 1769 | XUD7 | M | + | TSW | 12/93 ▸ 07/98 | 1301JY | **731181** | 610 377,5 | ALM |
| 1.8 D | N2C2/T | D | 1769 | XUD7 | M | - | TSW | 09/92 ▸ 10/93 | 96050670 | **816716** | 610 377,5 | ALM |
| 1.8 D | N2C2/T | D | 1769 | XUD7 | M | - | TSW | 10/93 ▸ 12/93 | 1331RY | **730927** | 610 377,5 | ALM |
| 1.8 D | N2C2/T | D | 1769 | XUD7 | M | - | TSW | 12/93 ▸ 07/98 | 1301JV | **731010** | 610 377,5 | ALM |
| 1.8 D | N2C2/T | D | 1769 | XUD7 | M | + | TSW | 10/93 ▸ 11/93 | 1301L2 | **730985** | 610 377,5 | ALM |
| 6171 ▸ 6231 | | | | | | | | | | | | |
| 1.9 TD | N2C/7/8 ; N2F/4/5 | D | 1905 | XUD9TE | M | +/- | TSW 819755 | 07/92 ▸ 10/93 | 96150272 | **734454** | 610 348 | CBS |
| 1.9 TD | N2D9 ; N2C/7/8 ; N2F 4/5 | D | 1905 | XUD9TE | M | +/- | TSW 819759 | 10/93 ▸ 07/98 | 1301KG | **731176** | 610 377,5 | ALM |
| 1.9 D | N2D8 ; N2C/3/4/4/T/6 | D | 1905 | XUD9,XUD9A | M | + | TSW 819759 | 10/93 ▸ 12/93 | 1301TK | **730985** | 610 377,5 | ALM |
| 1.9 D | N2C/3/4/4/T/6 ; N2E9 ; N2D/5/5/T/8 ; N2H/8/8 T/9 ; N2J/1/1/T | D | 1905 | XUD9,XUD9A | M | + | TSW 819759 | 12/93 ▸ 07/98 | 1301JY | **731181** | 610 377,5 | ALM |
| 1.9 D | N2D8 ; N2C/3/4/4/T/6 | D | 1905 | XUD9,XUD9A | M | - | TSW 819774 | 09/92 ▸ 10/93 | 96050670 | **816716** | 610 377,5 | ALM |
| 1.9 D | N2D8 ; N2C/3/4/4/T/6 | D | 1905 | XUD9,XUD9A | M | - | TSW 819774 | 10/93 ▸ 12/93 | 1301TJ | **730927** | 610 377,5 | ALM |
| 1.9 D | N2C/3/4/4/T/5/6 ; N2E9 ; N2D/5/5/T/8 ; N2H/8 8/T/9 ; N2J/1/1/T | D | 1905 | XUD9,XUD9A | M | - | TSW 820031 | 12/93 ▸ 07/98 | 1301JV | **731010** | 610 377,5 | ALM |
| 1.9 D | N2C3A | D | 1905 | XUD9A | A | +/- | TSW 820031 | 09/92 ▸ 10/93 | 96055582 | **730508** | 610 377,5 | ALM |
| 1.9 D | N2C3A | D | 1905 | XUD9A | A | +/- | TSW 819774 | 10/93 ▸ 12/93 | 1301TL | **730983** | 610 377,5 | ALM |
| 1.9 D | N2C3A ; N2H5 | D | 1905 | XUD9A | A | +/- | TSW | 12/93 ▸ 04/95 | 1301X0 | **731180** | 610 377,5 | ALM |
| 1.9 D | N2H5 ; N2C/3A ; N2L/5/6 | D | 1905 | XUD9A | A | +/- | TSW | 04/95 ▸ 07/98 | 1301KE | **731180** | 610 377,5 | ALM |
| 1.9 D | N2D8 ; N2C/3/4/4/T/6 | D | 1905 | XUD9,XUD9A | M | + | TSW | 09/92 ▸ 09/93 | 96050671 | **730507** | 610 377,5 | ALM |
| ▸ 6170 | | | | | | | | | | | | |
| 1.9 D | N2D8 ; N2C/3/4/4/T/6 | D | 1905 | XUD9,XUD9A | M | + | TSW | 10/93 ▸ 11/93 | 1301L2 | **730985** | 610 377,5 | ALM |

## CITROEN

### BERLINGO (96>2002)

| | | | | | | | | | | | | |
|---|---|---|---|---|---|---|---|---|---|---|---|---|
| 1.1 i GPL | MAHDZF | F | 1124 | TU1M+ | M | +/- | TSW | 01/99 ▸ 12/02 | 133052 | **732564** | 460 377 | ALM |
| 1.1 i GPL | MAHDZF | F | 1124 | TU1M+ | M | +/- | TSW | 01/99 ▸ 12/02 | 133302 | **732563** | 610 377 | ALM |
| 1.4 i GPL | MFKFXF | F | 1360 | TU3JP | M | +/- | TSW | 01/00 ▸ 07/01 | 133047 | **732563** | 610 377 | ALM |
| 1.4 i GPL | MFKFXF | F | 1360 | TU3JP | M | +/- | TSW | 07/01 ▸ 12/02 | 133302 | **732563** | 610 377 | ALM |
| 1.1 i | MAH/DZA/DZD/DZF/KXB ; MBH/DZE/DZF/FXW ; MFH DZE/DZF/FXB | E | 1124 | TU1JP,TU1M+ | M | +/- | TSW | 07/96 ▸ 12/02 | 1331CP | **732564** | 460 377 | ALM |
| 1.1 i | MAH/DZD/DZF/KXB ; MBH/DZE/DZF/FXW ; MFH/DZE DZF/FXB | E | 1124 | TU1JP,TU1M+ | M | +/- | TSW | 10/98 ▸ 12/02 | 133302 | **732563** | 610 377 | ALM |
| 1.4,1.4 i | MBK/5AG/6CG/FWB/FXF MCK/FWB/FXF ; MFK/5AG/6CG/FWB/FXB/FXF | E | 1360 | TU3.2,TU3JP | M | +/- | TSW | 07/96 ▸ 12/02 | 133047 | **732563** | 610 377 | ALM |
| 1.4 i | MBK/6CG/FWB/FXF ; MCK/FWB/FXF ; MFK/6CG/FWB FXB/FXF | E | 1360 | TU3JP | M | +/- | TSW | 07/01 ▸ 12/02 | 133303 | **732563** | 610 377 | ALM |
| 1.6 i 16V | MFN/FUB/FUF | E | 1587 | TU5JP4 | M | +/- | TSW | 12/00 ▸ 07/01 | 133047 | **732563** | 610 377 | ALM |

# CITROEN (.../...)

## BERLINGO (96>2002) (.../...)

| | | | CC | | | AC | | | OE | Valeo | DIM. | TECH |
|---|---|---|---|---|---|---|---|---|---|---|---|---|
| 1.6 i 16V | MFN/FUB/FUF | E | 1587 | TU5JP4 | M | +/- | TSW | 07/01 ▸ 12/02 | 133303 | **732563** | 610 377 | ALM |
| 1.8 i | MFLFXF | E | 1761 | XU7JB | M | +/- | TSW | 07/97 ▸ 07/01 | 133047 | **732563** | 610 377 | ALM |
| 1.8 i | MFLFXF | E | 1761 | XU7JB | M | +/- | TSW | 07/01 ▸ 12/02 | 133302 | **732563** | 610 377 | ALM |
| 1.8 D | MBA9AE ; MCA9AE | D | 1769 | XUD7 | M | + | TSW | 07/96 ▸ 03/97 | 133057 | **732565** | 670 377,5 | ALM |
| 1.8 D | MBA/9AE/PAG ; MEA9AE ; MFA9AE ; MCA/9AE/9AG | D | 1769 | XUD7 | M | + | TSW | 03/97 ▸ 12/02 | 133042 | **732577** | 670 377,5 | ALM |
| 1.8 D | MBA9AE ; MCA9AE | D | 1769 | XUD7 | M | - | TSW | 07/96 ▸ 03/97 | 133056 | **731570** | 670 377,5 | ALM |
| 1.8 D | MBA/9AE/PAG ; MEA9AE ; MFA9AE ; MCA/9AE/9AG | D | 1769 | XUD7 | M | - | PIP+ TSW | 03/97 ▸ 12/02 | 133041 | **732517** | 670 377,5 | ALM |
| 1.9 D | MCWJZF ; MEWJZF ; MFWJZF ; MBW/JZC/JZF | D | 1868 | DW8 | M | + | TSW | 07/98 ▸ 12/99 | 133042 | **732577** | 670 377,5 | ALM |
| 1.9 D | MBW/JYB/JYP/JZC/JZF ; MEWJZF ; MCW/JYB/JZF MFW/JYB/JZF | D | 1868 | DW8,DW8B | M | + | TSW | 12/99 ▸ 07/01 | 133058 | **732620** | 668,8 377,5 | ALB |
| 1.9 D | MBW/JYB/JYP/JZC/JZF ; MEWJZF ; MCW/JYB/JZF MFW/JYB/JZF | D | 1868 | DW8,DW8B | M | + | TSW | 07/01 ▸ 12/02 | 1330E2 | **734456** | 669 365 | ALB |
| 1.9 D | MBW/JYB/JYP/JZC/JZF ; MEWJZF ; MCW/JYB/JZF MFW/JYB/JZF | D | 1868 | DW8,DW8B | M | - | PIP+ TSW | 07/98 ▸ 07/01 | 133041 | **732517** | 670 377,5 | ALM |
| 1.9 D | MBW/JYB/JYP/JZC/JZF ; MEWJZF ; MCW/JYB/JZF MFW/JYB/JZF | D | 1868 | DW8,DW8B | M | - | PIP+ TSW | 07/01 ▸ 12/02 | 1330E1 | **732517** | 670 377,5 | ALM |
| 1.9 D | MCD9BE ; MFDJYF ; MBD/9BE | D | 1905 | XUD9A | M | + | TSW | 07/96 ▸ 03/97 | 133057 | **732565** | 670 377,5 | ALM |
| 1.9 D | MCD9BE ; MED9BE ; MBD/9BE ; MFD/9BE/JYF | D | 1905 | XUD9A | M | + | TSW | 03/97 ▸ 12/02 | 1331CW | **732577** | 670 377,5 | ALM |
| 1.9 D | MCD9BE ; MFDJYF ; MBD/9BE | D | 1905 | XUD9A | M | - | TSW | 07/96 ▸ 03/97 | 133056 | **731570** | 670 377,5 | ALM |
| 1.9 D | MCD9BE ; MED9BE ; MBD/9BE ; MFD/9BE/JYF | D | 1905 | XUD9A | M | - | PIP+ TSW | 03/97 ▸ 12/02 | 133041 | **732517** | 670 377,5 | ALM |
| 2.0 HDi | MBR/HYB/HYF ; MCR HYB/HYF ; MFR/HYB/HYF | D | 1997 | DW10TD | M | | TSW | 10/99 ▸ 12/02 | 1330C9 | **732620** | 668,8 377,5 | ALB |

## BERLINGO (2002>)

| | | | | | | | | | | | | |
|---|---|---|---|---|---|---|---|---|---|---|---|---|
| 1.4 i GNV,1.4 i GPL | GCKFWB ; GJKFWB GBK/FWB | F | 1360 | TU3JP | M | +/- | DN6, TSW | 04/03 ▸ 05/08 | 1330G2 | **732908** | 380 551,3 | ALM |
| 1.4 i GNV,1.4 i GPL | GCKFWB ; GJKFWB GBK/FWB | F | 1360 | TU3JP | M | +/- | DN6, TSW | 04/03 ▸ | 1330G3 | **732890** | 378 562,5 | ALB |
| 1.4 i GNV,1.4 i GPL | GCKFWB ; GJKFWB GBK/FWB | F | 1360 | TU3JP | M | | DN6, TSW | 04/03 ▸ 09/10 | 1330F4 | **732892** | 378 562,8 | ALB |
| 1.4 i GNV | GBKFWB ; GJKFWB | F | 1360 | TU3JP | M | | DN6, TSW | 06/08 ▸ 09/10 | 1330G2 | **732908** | 380 551,3 | ALM |
| 1.1 i | GBHFXB | E | 1124 | TU1JP | M | +/- | DN6, TSW | 12/02 ▸ | 1330G3 | **732890** | 378 562,5 | ALB |
| 1.1 i | GBHFXB | E | 1124 | TU1JP | M | +/- | DN6, TSW | 12/02 ▸ 08/05 | 1330G2 | **732908** | 380 551,3 | ALM |
| 1.1 i | GBHFXB | E | 1124 | TU1JP | M | | DN6, TSW | 12/02 ▸ 08/05 | 1330F4 | **732892** | 378 562,8 | ALB |
| 1.1 i | GBHFXB | E | 1124 | TU1JP | M | | DN6, TSW | 12/02 ▸ | 133084 | **732890** | 378 562,5 | ALB |
| 1.1 i | GBHFXB | E | 1124 | TU1JP | M | | DN6, TSW | 12/02 ▸ | 133083 | **732908** | 380 551,3 | ALM |
| 1.4 i | GBK/FVC/FWB ; GJK/FVC/FWB | E | 1360 | TU3A,TU3JP | M | +/- | DN6, TSW | 12/02 ▸ | 1330G3 | **732890** | 378 562,5 | ALB |
| 1.4 i | GBK/FVC/FWB ; GJK/FVC/FWB | E | 1360 | TU3A,TU3JP | M | +/- | DN6, TSW | 12/02 ▸ | 1330G2 | **732908** | 380 551,3 | ALM |
| 1.4 i | GBKFWB ; GJKFWB | E | 1360 | TU3JP | M | | DN6, TSW | 12/02 ▸ | 133084 | **732890** | 378 562,5 | ALB |
| 1.4 i | GBKFWB ; GJKFWB | E | 1360 | TU3JP | M | | DN6, TSW | 12/02 ▸ | 133083 | **732908** | 380 551,3 | ALM |
| 1.4 i | GBK/FWB/FWC ; GJK/FWB/FWC | E | 1360 | TU3A,TU3JP | M | | DN6, TSW | 12/02 ▸ 05/08 | 1330F4 | **732892** | 378 562,8 | ALB |
| 1.4 i | GBKFWC ; GJKFWC | E | 1360 | TU3A | M | | DN6, TSW | 09/05 ▸ 05/08 | 1330G2 | **732908** | 380 551,3 | ALM |
| 1.6 i 16V | GCNFUB ; GJNFUB GBN/FUB | E | 1587 | TU5JP4 | M | +/- | DN6, TSW | 12/02 ▸ | 1330G3 | **732890** | 378 562,5 | ALB |
| 1.6 i 16V | GCNFUB ; GJNFUB GBN/FUB | E | 1587 | TU5JP4 | M | +/- | DN6, TSW | 12/02 ▸ 05/08 | 1330G2 | **732908** | 380 551,3 | ALM |
| 1.6 i 16V | GJNFUC | E | 1587 | TU5JP4 | M | | DN6, TSW | 12/02 ▸ 05/08 | 1330G2 | **732908** | 380 551,3 | ALM |
| 1.6 i 16V | GCNFUB ; GBN/FUB GJN/FUB/FUC | E | 1587 | TU5JP4 | M | | DN6, TSW | 12/02 ▸ 05/08 | 1330F4 | **732892** | 378 562,8 | ALB |
| 1.6 i 16V | GJNFUB | E | 1587 | TU5JP4 | M | | DN6, TSW | 12/02 ▸ | 133083 | **732908** | 380 551,3 | ALM |
| 1.6 i 16V | GJNFUB | E | 1587 | TU5JP4 | M | | DN6, TSW | 12/02 ▸ | 133084 | **732890** | 378 562,5 | ALB |
| 1.9 D | GCWJYB ; GEWJYB ; GJWJYB ; GBW/JYB | D | 1868 | DW8B | M | +/- | DN6, TSW | 12/02 ▸ 05/08 | 1330F4 | **732892** | 378 562,8 | ALB |
| 1.9 D | GCWJYB ; GEWJYB ; GJWJYB ; GBW/JYB 9884 ▸ | D | 1868 | DW8B | M | +/- | DN6, TSW | 12/03 ▸ | 1330N7 | **732892** | 378 562,8 | ALB |
| 2.0 HDi | GCRHYB ; GERHYB GBR/HYB ; GJR/HYB/HYK | D | 1997 | DW10TD | M | +/- | DN6, TSW | 12/02 ▸ 05/08 | 1330F4 | **732892** | 378 562,8 | ALB |
| 2.0 HDi | GCRHYB ; GERHYB GBR/HYB ; GJR/HYB/HYK | D | 1997 | DW10TD | M | +/- | DN6, TSW | 12/03 ▸ | 1330N7 | **732892** | 378 562,8 | ALB |

## BERLINGO (B9) (2008>)

| | | | | | | | | | | | | |
|---|---|---|---|---|---|---|---|---|---|---|---|---|
| 1.6 i 16V | 7CNFRC ; 7AN/FRC 7JN/FRC/FUC | E | 1587 | TU5JP4,TU5JP4B | M | +/- | | 05/08 ▸ 10/10 | 1330V5 | •**735090** | 378 562,5 | ALB |
| 1.6 VTi 16V | 7J5FS0 | E | 1598 | EP6C | M | | | 11/09 ▸ | 1330S8 | **735091** | 378,6 562,6 | ALB |
| 1.6 HDi 16V | 7A9/HTC/HXC ; 7B9 HTC/HXC ; 7E9HXC ; 7F9HXC ; 7C9/HTC/HXC 7M9HXC ; 7J9/HTC/HXC/HZC | D | 1560 | DV6ATED4,DV6AUTED4,DV6BTED4 DV6BUTED4,DV6TED4 | M | +/- | | 05/08 ▸ | 1330W2 | **734338** | 378,6 568,8 | ALB |

Radiator Ψυγείο Vodní chladič vízhűtő Радиатор Radiador Radiator Radyatör Radiator Radiatore di raffreddamento Motorkühler Radiateur Radiator



• **New** Nouveau **Nuevo** Novo **Nuovo** Nieuw **Neu** Nowość **Yeni** Новый Νέο **Nový**

| | Type Ctr. | | CC | | AC | | | OE | Valeo | DIM. | TECH |
|---|---|---|---|---|---|---|---|---|---|---|---|
| **CITROEN (.../...)** | | | | | | | | | | | |
| **BERLINGO (B9) (2008>) (.../...)** | | | | | | | | | | | |
| 1.6 HDi 16V | 7J9HVC ; 7M9HXC 7A9/HVC | D | 1560 | DV6AUTED4,DV6TED4B,DV6TED4BU | M | | | 07/09 ▸ | 1330W2 | **734338** | 378,6 568,8 | ALB |
| **C15** | | | | | | | | | | | |
| 1.0 | VDPL | E | 954 | XV8 | M | - | TSW | 11/86 ▸ 05/88 | 95606692 | **883715** | 510 322 | ALM |
| 1.1 | VDP/A/F | E | 1124 | XW7B1 | M | - | TSW | 10/84 ▸ 05/88 | 95606692 | **883715** | 510 322 | ALM |
| 1.1 i | VDVN ; VDS/C/E/F/Z | E | 1124 | TU1M | M | - | TSW | 01/95 ▸ | 1301Y2 | **731173** | 530 287 | CBS |
| 1.4,1.4 i | VDSA ; VDP/J/K/M | E | 1360 | XY7,XY7CP | M | | TSW | 07/86 ▸ 05/88 | 95606692 | **883715** | 510 322 | ALM |
| 1.4,1.4 i ▸ 3978 | VDSA ; VDP/J/K/M | E | 1360 | XY7,XY7CP | M | - | TSW | 07/86 ▸ 07/87 | 95606691 | **883464** | 380 322 | ALM |
| 1.7 D | VDSX ; VDP/B/BF/G/P | D | 1769 | XUD7 | M | - | TSW | 07/85 ▸ 02/94 | 96148094 | **730897** | 530 287 | CBS |
| 1.7 D | VDSX ; VDP/B/G/P | D | 1769 | XUD7 | M | - | TSW | 03/94 ▸ | 1301Y2 | **731173** | 530 287 | CBS |
| 1.9 D | VDV/V/W/Y | D | 1868 | DW8B | M | - | TSW | 09/01 ▸ | 1301Y2 | **731173** | 530 287 | CBS |
| **C25 (81>90)** | | | | | | | | | | | |
| 1.8 | 280/A10/C10 | E | 1796 | XM7T | M | - | TSW | 11/81 ▸ 05/85 | 130551 | **•883764** | 663 414 | ALM |
| 1.8 | 280C10 | E | 1796 | XM7T | M | - | TSW | 07/83 ▸ 08/90 | 1300G0 | **811380** | 663 414 | ALM |
| 2.0 | 280/B20/G20 | E | 1971 | XN1T | M | - | TSW | 11/81 ▸ 05/85 | 130551 | **•883764** | 663 414 | ALM |
| 2.0 | 280/B20/G20 | E | 1971 | XN1T | M | - | TSW | 07/83 ▸ 08/90 | 1300G0 | **811380** | 663 414 | ALM |
| 1.9 D | 280G | D | 1905 | XUD9A | M | - | TSW | 12/87 ▸ 1990 | ZF05931556 | **883765** | 825 414 | ALM |
| 1.9 D | 280G | D | 1905 | XUD9A | M | | TSW | 12/87 ▸ 08/90 | 1300J9 | **730040** | 663 414,5 | ALM |
| 2.5 D,2.5 TD | 280/B50/B90/G50/G52 | D | 2500 | U25 | M | - | TSW | 07/87 ▸ 08/90 | 1300K3 | **730040** | 663 414,5 | ALM |
| **C25 (90>94)** | | | | | | | | | | | |
| 1.8 | 290/A11/C11 | E | 1796 | XM7T | M | - | TSW | 09/90 ▸ 02/94 | 1300G0 | **811380** | 663 414 | ALM |
| 2.0 | 290/A22/A42/B22/B42/B44/C22/C42/C44/G22/G42 G44/H22/H42/J32/J42/K32/K42/L32/L42 | E | 1971 | XN1T,XN1TA,XN1TA CP | M | - | TSW | 09/90 ▸ 02/94 | 1300G0 | **811380** | 663 414 | ALM |
| 1.9 D | 290/B62/C62/G62/H62/M62/S62 | D | 1905 | XUD9A,XUD9AL | M | - | TSW | 09/90 ▸ 02/94 | 1300J9 | **730040** | 663 414,5 | ALM |
| 1.9 TD | 290/A72/B72/C72/D72 G72/H72/V72 | D | 1929 | M705 | M | | TSW | 09/90 ▸ 02/94 | 1300K3 | **730040** | 663 414,5 | ALM |
| 2.5 D,2.5 TD | 290/A62/B52/B54/B90 C52/C54/G52/G54/H52/J52/K52/L52 | D | 2500 | U25 | M | - | TSW | 09/90 ▸ 02/94 | 1300J9 | **730040** | 663 414,5 | ALM |
| 2.5 TD | 290/B92/B94/C92/C94 G92/G94/GJ2/H92/J92/L92 | D | 2500 | U25 | M | - | TSW | 09/90 ▸ 02/94 | 1300K3 | **730040** | 663 414,5 | ALM |
| **DISPATCH (95>2003)** | | | | | | | | | | | |
| 1.6 i | U6U/G/T | E | 1581 | 160A | M | + | TSW | 09/95 ▸ 12/03 | 1301P2 | **731166** | 670 470 | ALM |
| 1.6 i | U6U/G/T | E | 1581 | 160A | M | - | VCAP TSW | 09/95 ▸ 12/03 | 133073 | **731165** | 600 470 | ALM |
| 1.6 i | U6U/G/T | E | 1581 | 160A | M | - | VCAP TSW | 09/95 ▸ | 1301P1 | **731165** | 600 470 | ALM |
| 1.9 D | BDWJZA ; BZWJZA | D | 1868 | DW8 | M | + | TSW | 02/99 ▸ 12/99 | 1301Y7 | **731168** | 670 470 | ALM |
| 1.9 D | BDWJZA ; BZWJZA | D | 1868 | DW8 | M | + | TSW | 12/99 ▸ 12/03 | 1330E3 | **732692** | 669 470 | ALB |
| 1.9 D | BDWJZA ; BZWJZA | D | 1868 | DW8 | M | - | TSW | 02/99 ▸ 12/03 | 1301P3 | **731166** | 670 470 | ALM |
| 1.9 D,1.9 TD | BZDHXA ; U6KS ; BYD HXA ; U6U/F/K/R/S/5/U | D | 1905 | XUD9A,XUD9BTF,XUD9TF | M | + | TSW | 09/95 ▸ 12/03 | 1301Y7 | **731168** | 670 470 | ALM |
| 1.9 TD | BZDHXA ; U6KS ; BYD HXA ; U6U/K/R/S/5 | D | 1905 | XUD9BTF,XUD9TF | M | - | TSW | 09/95 ▸ 12/03 | 1301Y4 | **731168** | 670 470 | ALM |
| 1.9 D | U6U/F/U | D | 1905 | XUD9A | M | - | TSW | 09/95 ▸ 12/03 | 1301P3 | **731166** | 670 470 | ALM |
| 2.0 HDi | BBRHZA ; BERHXA BHRHZB ; BYRHXA ; BZRHXA ; BAR/HXA/HZA | D | 1997 | DW10ATED,DW10BTED,DW10CTED | M | | TSW | 09/00 ▸ 12/03 | 1330E3 | **732692** | 669 470 | ALB |
| **DISPATCH (2004>2006)** | | | | | | | | | | | |
| 1.9 D | | D | 1868 | DW8B | M | + | TSW | 01/04 ▸ 12/06 | 1330E3 | **732692** | 669 470 | ALB |
| 1.9 D | | D | 1868 | DW8B | M | - | TSW | 01/04 ▸ 12/06 | 1301P3 | **731166** | 670 470 | ALM |
| 2.0 HDi | | D | 1997 | DW10BTED,DW10BTED+L4 | M | +/- | TSW | 01/04 ▸ 12/06 | 1330E3 | **732692** | 669 470 | ALB |
| **DISPATCH (2007>)** | | | | | | | | | | | |
| 2.0 i 16V | XERFJC | E | 1997 | EW10A | M | | | 03/07 ▸ | 1331ZZ | **732881** | 464 562,8 | ALB |
| **JUMPER (94>2001)** | | | | | | | | | | | |
| 2.0 i | 231/A22/A24/A32/B22/B24/C22/C24/G22/G32/H22 H32/V22/V24 ; 232/B22/F22/G22/H22/J22/K22 L22/N22/V22/V24 ; 321A34 ; 233/B22/D22/F22 G22/H22/J22/K22/L22/N22 | E | 1998 | XU10J2U | M | + | TSW | 02/94 ▸ 12/01 | 1301P6 | **731611** | 790 414,5 | ALM |
| 2.0 i | 231/A22/A24/A32/B22/B24/C22/C24/G22/G32/H22 H32/V22/V24 ; 232/B22/F22/G22/H22/J22/K22 L22/N22/V22/V24 ; 321A34 ; 233/B22/D22/F22 G22/H22/J22/K22/L22/N22 | E | 1998 | XU10J2U | M | - | TSW | 02/94 ▸ 12/01 | 1301HQ | **730997** | 790 414,5 | ALM |

# CITROEN (.../...)

## JUMPER (94>2001) (.../...)

| | | | CC | | AC | | | OE | Valeo | DIM. | TECH |
|---|---|---|---|---|---|---|---|---|---|---|---|
| 2.0 i | 231/A22/A24/A32/B22/B24/C22/C24/G22/G32/H22 H32/V22/V24 ; 232/B22/F22/G22/H22/J22/K22 L22/N22/V22/V24 ; 321A34 ; 233/B22/D22/F22 G22/H22/J22/K22/L22/N22 | E | 1998 | XU10J2U | M | - | TSW | 02/94 ▸ | 1301N3 | **730997** | 790 414,5 | ALM |
| 1.9 D,1.9 TD | 231/A62/A72/A82/B72 B82/C32/C62/C72/C82/G62/G82/H82/V62/V72/V82 232/B72/B82/C62/C72/C82/G72/H82/V82 | D | 1905 | XUD9A,XUD9AU,XUD9TEF,XUD9UTF | M | + | TSW | 02/94 ▸ 12/01 | 1301HS | **731611** | 790 414,5 | ALM |
| 1.9 D,1.9 TD | 231/A32/A62/A72/A74 A84/B72/B74/B82/B84/C62/C72/C82/E72/G72/G82 H62/H72/H82/V62/V72/V82 ; 232/B72/B82/C32 C62/C82/G82/H72/V82 | D | 1905 | XUD9A,XUD9AU,XUD9TEF,XUD9UTF | M | + | TSW | 02/94 ▸ 12/01 | 133017 | **731611** | 790 414,5 | ALM |
| 1.9 D,1.9 TD | 231/A32/A62/A72/A74 A82/A84/B72/B74/B82/B84/C32/C62/C72/C82/E72 G62/G72/G82/H62/H72/H82/V62/V72/V82 ; 232 B72/B82/C32/C62/C72/G72/G82/H72/H82/V82 | D | 1905 | XUD9A,XUD9AU,XUD9TEF,XUD9UTF | M | + | TSW | 02/94 ▸ 12/01 | 1301N0 | **731611** | 790 414,5 | ALM |
| 1.9 D,1.9 TD | 231/A62/B72/C62/C82 G82/V72/V82 ; 232/B72/C62/C82 | D | 1905 | XUD9AU,XUD9TEF,XUD9UTF | M | - | TSW | 02/94 ▸ 12/01 | 1301N0 | **731611** | 790 414,5 | ALM |
| 1.9 D,1.9 TD | 231/A32/A62/A72/A74 A84/B72/B74/B82/B84/C62/C72/C82/E72/G72/H62 H72/H82/V62/V82 ; 232/B72/B82/C32/C62/G82 H72/V82 | D | 1905 | XUD9A,XUD9AU,XUD9TEF,XUD9UTF | M | - | TSW | 02/94 ▸ 12/01 | 1301HS | **731611** | 790 414,5 | ALM |
| 1.9 D,1.9 TD | 231/A62/A72/A82/B72 B82/C32/C72/C82/G62/G82/H82/V62/V72/V82 232/B72/B82/C72/G72/H82/V82 | D | 1905 | XUD9A,XUD9AU,XUD9TEF,XUD9UTF | M | - | TSW | 02/94 ▸ 12/01 | 133017 | **731611** | 790 414,5 | ALM |
| 2.0 HDi | 231/AJ2/BJ2/VJ2 | D | 1997 | DW10TD | M | - | TSW | 09/01 ▸ 12/01 | 133097 | **731611** | 790 414,5 | ALM |
| 2.5 D,2.5 TD | 231/A52/B52/B54/B92 B94/C92/G52/G92/H52/H92/J52/J92/V52/V54/V92 V94 ; 232/B52/B54/B92/B94/F52/F92/G52/G54 G92/H52/H54/H92/J52/J54/J92/J94/K52/K54/K92 K94/L52/L54/L92/N52/N54/N92/N94/V52/V54/V92 V94 ; 233/B52/B92/D52/D92/G52/G92/H52/H92 J52/J54/J92/J94/K52/K | D | 2446 | DJ5,DJ5T | M | + | TSW | 02/94 ▸ 12/01 | 1301N6 | **730999** | 1000 414 | CBS |
| 2.5 D,2.5 TD | 231/B52/B54/B92/B94 C92/G52/G92/H52/H92/J52/J92/V52/V94 ; 232 B52/B54/B92/B94/F52/F92/G52/G92/H52/H54/J52 J54/J92/J94/K52/K54/K92/K94/L52/L54/L92/N54 N92/N94/V52/V54/V92/V94 ; 233/B52/B92/D52 D92/G52/G92/H52/H92/J52/J54/J92/J94/K52/K54 K92/L52/L54/L92/N52/N | D | 2446 | DJ5,DJ5T | M | + | TSW | 02/94 ▸ 12/01 | 1301HT | **730999** | 1000 414 | CBS |
| 2.5 TDi | 231/B42/B44/C42/C44 G42/H42/J42/V42/V44 ; 232/B42/B44/F42/G42 H42/H44/J42/J44/K42/K44/L42/N42/N44/V42/V44 233/B42/B44/D42/G42/H42/J42/J44/K42/K44/L42 N42/N44 | D | 2446 | DJ5TED | M | + | TSW | 07/96 ▸ 12/01 | 1301N0 | **731611** | 790 414,5 | ALM |
| 2.5 D,2.5 TD | 231/A52/B52/B54/B92 B94/C92/G52/G92/H52/H92/J52/J92/V52/V54/V92 V94 ; 232/B52/B54/B92/B94/F52/F92/G52/G54 G92/H52/H54/H92/J52/J54/J92/J94/K52/K54/K92 K94/L52/L54/L92/N52/N54/N92/N94/V52/V54/V92 V94 ; 233/B52/B92/D52/D92/G52/G92/H52/H92 J52/J54/J92/J94/K52/K | D | 2446 | DJ5,DJ5T | M | - | TSW | 02/94 ▸ 12/01 | 133017 | **731611** | 790 414,5 | ALM |
| 2.5 D,2.5 TD | 231/B52/B92/C92 232/B52/B92/G52/G92/J52/J92/K52/K92 ; 233 B52/B92/J52/J92 | D | 2446 | DJ5,DJ5T | M | - | TSW | 02/94 ▸ 06/95 | 1301N0 | **731611** | 790 414,5 | ALM |
| 2.5 D,2.5 TD | 231/B52/B92/C92 232/B52/B92/G52/H92/J52/J92/K52/K92 ; 233 B52/B92/J52/J92 | D | 2446 | DJ5,DJ5T | M | - | TSW | 02/94 ▸ 07/95 | 1301HS | **731611** | 790 414,5 | ALM |
| 2.5 TDi | 231/B42/B44/C42/C44 G42/H42/J42/V42/V44 ; 232/B42/B44/F42/G42 H42/H44/J42/J44/K42/K44/L42/N42/N44/V42/V44 233/B42/B44/D42/G42/H42/J42/J44/K42/K44/L42 N42/N44 | D | 2446 | DJ5TED | M | - | TSW | 07/96 ▸ 12/01 | 1301N3 | **730997** | 790 414,5 | ALM |
| 2.8 D | 232 | D | 2798 | 8140-63 | M | +/- | TSW | 06/99 ▸ 12/01 | 133017 | **731611** | 790 414,5 | ALM |
| 2.8 HDi | 231/AL2/BL2/JL2/VH2 | D | 2798 | 8140-43S | M | - | TSW | 09/00 ▸ 12/01 | 133097 | **731611** | 790 414,5 | ALM |

## JUMPER (2002>2006)

| | | | | | | | | | | | | |
|---|---|---|---|---|---|---|---|---|---|---|---|---|
| 2.0 i | | F | 1998 | XU10J2U | M | | TSW | 01/02 ▸ 06/06 | 1330L8 | **731611** | 790 414,5 | ALM |
| 2.0 i | ZAT/MF ; ZBT/MF/MP ; ZCT/MF/MM | E | 1998 | XU10J2U | M | | TSW | 01/02 ▸ 06/06 | 1330L8 | **731611** | 790 414,5 | ALM |
| 2.0 HDi | ZAA/MF/MP ; ZBA/MD MFA/MP | D | 1997 | DW10UTD | M | + | TSW | 01/02 ▸ | 133098 | **731611** | 790 414,5 | ALM |

Radiator Radiateur Motorkühler Radiatore di raffreddamento Radiator Radyatör Radiator Радиатор Radiador vízhűtő Vodní chladič Radiator Ψυγείο



• **New** Nouveau **Nuevo** Novo **Nuovo** Nieuw **Neu** Nowość **Yeni** Новый Νέο **Nový**

# CITROEN (.../...)

| Type Ctr. | | CC | | AC | | | OE | Valeo | DIM. | TECH |
|---|---|---|---|---|---|---|---|---|---|---|
| **JUMPER (2002>2006) (.../...)** | | | | | | | | | | |
| 2.0 HDi ZAA/MF/MP ; ZBA/MD MFA/MP | D | 1997 | DW10UTD | M | - | TSW | 01/02 ▸ 06/06 | 133097 | **731611** | 790 414,5 | ALM |
| 2.2 HDi ZAR/MF/MP ; ZBR/MD MF/MH/MP ; ZCR/MD/MF/MH/MM | D | 2179 | DW12TED | M | + | TSW | 01/02 ▸ | 133098 | **731611** | 790 414,5 | ALM |
| 2.2 HDi ZAR/MF/MP ; ZBR/MD MF/MH/MP ; ZCR/MD/MF/MH/MM | D | 2179 | DW12TED | M | - | TSW | 01/02 ▸ 06/06 | 133097 | **731611** | 790 414,5 | ALM |
| 2.8 HDi ZAP/MF/MP ; ZBP/MD MF/MH/MP ; ZCP/MD/MF/MH/MM | D | 2798 | F28TDCR | M | + | TSW | 01/02 ▸ | 133098 | **731611** | 790 414,5 | ALM |
| 2.8 HDi ZAP/MF/MP ; ZBP/MD MF/MH/MP ; ZCP/MD/MF/MH/MM | D | 2798 | F28TDCR | M | - | TSW | 01/02 ▸ 06/06 | 133097 | **731611** | 790 414,5 | ALM |
| **JUMPY (95>2003)** | | | | | | | | | | |
| 1.6 i U6U/G/N/N/R/T/T/5/T/6/T/8/T/9 | E | 1581 | 160A | M | + | TSW | 09/95 ▸ 12/03 | 1301P2 | **731166** | 670 470 | ALM |
| 1.6 i U6U/G/N/N/R/T/T/5/T/6/T/8/T/9 | E | 1581 | 160A | M | - | VCAP TSW | 09/95 ▸ 12/03 | 133073 | **731165** | 600 470 | ALM |
| 2.0 i 16V BBRFNC ; BDRFNC BERFNC ; BZRFNC ; BAR/FNC | E | 1997 | EW10J4 | M | + | TSW | 09/00 ▸ 12/03 | 1301P3 | **731166** | 670 470 | ALM |
| 2.0 i 16V BBRFNC ; BDRFNC BERFNC ; BZRFNC ; BAR/FNC | E | 1997 | EW10J4 | M | - | VCAP TSW | 09/00 ▸ 12/03 | 133073 | **731165** | 600 470 | ALM |
| 2.0 i 16V BARFNF ; BDRFNF | E | 1997 | EW10J4 | A | + | TSW | 01/01 ▸ 12/03 | 1301P3 | **731166** | 670 470 | ALM |
| 1.9 D BBWJZA ; BDWJZA ; BEWJZA ; BVWJZA ; BXWJZA BZWJZA ; BAW/JZA | D | 1868 | DW8 | M | + | TSW | 05/98 ▸ 12/99 | 1301Y7 | **731168** | 670 470 | ALM |
| 1.9 D BBWJZA ; BAW/JZA ; BEWJZA ; BDW/JYB/JZA BVWJZA ; BXWJZA ; BTW/JYB/JZA ; BZW/JYB/JZA | D | 1868 | DW8,DW8B | M | + | TSW | 12/99 ▸ 12/03 | 1330E3 | **732692** | 669 470 | ALB |
| 1.9 D BBWJZA ; BDWJZA ; BEWJZA ; BVWJZA ; BXWJZA BZWJZA ; BAW/JZA | D | 1868 | DW8 | M | + | TSW | 12/99 ▸ | 133072 | **732692** | 669 470 | ALB |
| 1.9 D BBWJZA ; BAW/JZA ; BEWJZA ; BDW/JYB/JZA BVWJZA ; BXWJZA ; BTW/JYB/JZA ; BZW/JYB/JZA | D | 1868 | DW8,DW8B | M | - | TSW | 05/98 ▸ 12/03 | 1301P3 | **731166** | 670 470 | ALM |
| 1.9 D,1.9 TD BBDHXA ; BEDHXA BSDHXA ; BUDHXA ; BWDHXA ; BYDHXA ; BZDHXA BAD/HXA ; U6K/S/U/U/R ; U6U/F/H/K/L/P/R/R/8 R/9/S/5/S/6/S/8/S/9/U/U/9 | D | 1905 | XUD9A,XUD9BTF,XUD9TF | M | + | TSW | 09/95 ▸ 12/03 | 1301Y7 | **731168** | 670 470 | ALM |
| 1.9 D,1.9 TD BBDHXA ; BEDHXA BSDHXA ; BUDHXA ; BWDHXA ; BYDHXA ; BZDHXA BAD/HXA ; U6K/S/U/U/R ; U6U/F/H/K/L/P/R/R/8 R/9/S/5/S/6/S/8/S/9/U/U/9 | D | 1905 | XUD9A,XUD9BTF,XUD9TF | M | - | TSW | 09/95 ▸ 12/03 | 1301Y4 | **731168** | 670 470 | ALM |
| 1.9 D U6U/F/P/U/U/9 | D | 1905 | XUD9A | M | - | TSW | 09/95 ▸ 09/97 | 1301Z2 | **731166** | 670 470 | ALM |
| 1.9 D U6U/F/P/U/U/9 | D | 1905 | XUD9A | M | - | | 09/95 ▸ 09/97 | 1301Z2 | | 670 470 | ALM |
| 1.9 D U6U/F/P/U/U/9 | D | 1905 | XUD9A | M | - | TSW | 09/95 ▸ 07/01 | 1301P3 | **731166** | 670 470 | ALM |
| 2.0 HDi BBRHZA ; BCRHZB BAR/HXA/HZA/HZB ; BDR/HXB/HZA/HZB ; BER/HXA HZA/HZB ; BURHZB ; BWRHZB ; BSR/HXA/HXB/HZB BYR/HXA/HXB/HZB ; BZR/HXA/HXB | D | 1997 | DW10ATED,DW10BTED,DW10CTED | M | +/- | TSW | 09/00 ▸ 12/03 | 1330E3 | **732692** | 669 470 | ALB |
| 2.0 HDi 16V BTRHWB ; BZRHWB BAR/HWB | D | 1997 | DW10ATED4 | M | + | TSW | 01/01 ▸ 12/03 | 1301Y7 | **731168** | 670 470 | ALM |
| **JUMPY (2004>2006)** | | | | | | | | | | |
| 2.0 i 16V BERFNC ; BXRFNC BZRFNC ; BBR/FNC | E | 1997 | EW10J4 | M | + | TSW | 01/04 ▸ 12/06 | 1301P3 | **731166** | 670 470 | ALM |
| 2.0 i 16V BERFNC ; BXRFNC BZRFNC ; BBR/FNC | E | 1997 | EW10J4 | M | - | VCAP TSW | 01/04 ▸ 12/06 | 133073 | **731165** | 600 470 | ALM |
| 1.9 D BVWJYB ; BXWJYB ; BZWJYB ; BTW/JYB | D | 1868 | DW8B | M | + | TSW | 01/04 ▸ 12/06 | 1330E3 | **732692** | 669 470 | ALB |
| 1.9 D BVWJYB ; BXWJYB ; BZWJYB ; BTW/JYB | D | 1868 | DW8B | M | - | TSW | 01/04 ▸ 12/06 | 1301P3 | **731166** | 670 470 | ALM |
| 2.0 HDi 16V BYRHWB | D | 1997 | DW10ATED4 | M | +/- | TSW | 01/04 ▸ 12/06 | 1301Y7 | **731168** | 670 470 | ALM |
| 2.0 HDi BBR/HXB/HZB ; BER HXB/HZB ; BURHZB ; BSR/HXB/HZB ; BWR/HXB HZB ; BZRHWB ; BYR/HXB/HZB | D | 1997 | DW10BTED,DW10BTED+L4 | M | +/- | TSW | 01/04 ▸ 12/06 | 1330E3 | **732692** | 669 470 | ALB |
| **JUMPY (2007>)** | | | | | | | | | | |
| 2.0 i 16V XSRFHC ; XTRFHC XURFHC ; XER/FJC | E | 1997 | EW10A | M | | | 03/07 ▸ | 1331ZZ | **732881** | 464 562,8 | ALB |
| **RELAY (94>2001)** | | | | | | | | | | |
| 2.0 i 231/A22/G22 ; 232/A22/B22/G22 ; 233/G22/L22 | E | 1998 | XU10J2U | M | + | TSW | 02/94 ▸ | 1301P6 | **731611** | 790 414,5 | ALM |
| 2.0 i 231/A22/G22 ; 232/A22/B22/E22/G22 ; 233/G22 L22 | E | 1998 | XU10J2U | M | - | TSW | 02/94 ▸ | 1301N3 | **730997** | 790 414,5 | ALM |
| 1.9 D,1.9 TD 231/A72 ; 232/A62 A72 | D | 1905 | XUD9A,XUD9UTF | M | + | TSW | 02/94 ▸ 08/98 | 1301N0 | **731611** | 790 414,5 | ALM |
| 1.9 D,1.9 TD 231/A62 ; 232/E62 E82 | D | 1905 | XUD9A,XUD9UTF | M | + | TSW | 02/94 ▸ 12/01 | 133017 | **731611** | 790 414,5 | ALM |

| Type Ctr. | | CC | | AC | | | OE | Valeo | DIM. | TECH |
|---|---|---|---|---|---|---|---|---|---|---|
| **CITROEN (.../...)** | | | | | | | | | | |
| **RELAY (94>2001) (.../...)** | | | | | | | | | | |
| 1.9 D,1.9 TD 231/A62 ; 232/E62 E82 | D | 1905 | XUD9A,XUD9UTF | M | - | TSW | 02/94 ▸ 12/01 | 1301N0 | **731611** | 790 414,5 ALM |
| 1.9 D,1.9 TD 231/A72 ; 232/A62 A72 | D | 1905 | XUD9A,XUD9UTF | M | - | TSW | 02/94 ▸ 08/98 | 133017 | **731611** | 790 414,5 ALM |
| 2.0 HDi 231/AJ2/VJ2 | D | 1997 | DW10TD | M | - | TSW | 09/01 ▸ 12/01 | 133097 | **731611** | 790 414,5 ALM |
| 2.5 D,2.5 TD 231/B52/B92/G52/V52 232/B52/B92/G52/G92/J52/J92/K52/K92/L52/L92 V52 ; 233/B52/B92/G52/G92/J52/J92/K52/K92 L92 | D | 2446 | DJ5,DJ5T | M | + | TSW | 02/94 ▸ 12/01 | 1301N6 | **730999** | 1000 414 CBS |
| 2.5 D,2.5 TD 231/B52/B92/G52 232/B52/B92/G52/G92/J52/J92/K52/K92/L52 L92 ; 233/B52/B92/G52/G92/J52/J92/K52/K92 L92 | D | 2446 | DJ5,DJ5T | M | - | TSW | 02/94 ▸ 06/95 | 1301N0 | **731611** | 790 414,5 ALM |
| 2.5 D,2.5 TD 231/B52/B92/G52 232/B52/B92/G52/G92/J52/J92/K52/K92/L52 L92 ; 233/B52/B92/G52/G92/J52/J92/K52/K92 L92 | D | 2446 | DJ5,DJ5T | M | - | TSW | 07/95 ▸ 08/98 | 133017 | **731611** | 790 414,5 ALM |
| 2.5 TDi 231/B42 ; 232/B42 J42 ; 233/B42/J42 | D | 2446 | DJ5TED | M | - | TSW | 12/96 ▸ 12/01 | 1301N3 | **730997** | 790 414,5 ALM |
| 2.8 HDi 231/AL2/JL2/VH2 | D | 2798 | 8140-43S | M | - | TSW | 09/00 ▸ 12/01 | 133097 | **731611** | 790 414,5 ALM |
| **RELAY (2002>2006)** | | | | | | | | | | |
| 2.0 i ZATMF ; ZBTMF | E | 1998 | XU10J2U | M | +/- | TSW | 01/02 ▸ 06/06 | 1330L8 | **731611** | 790 414,5 ALM |
| 2.0 HDi ZAA/MF ; ZBA/MD/MF | D | 1997 | DW10UTD | M | - | TSW | 01/02 ▸ 06/06 | 133097 | **731611** | 790 414,5 ALM |
| 2.2 HDi ZAR/MF ; ZBR/MD/MF ZCR/MD/MH/MM | D | 2179 | DW12TED | M | - | TSW | 01/02 ▸ 06/06 | 133097 | **731611** | 790 414,5 ALM |
| 2.8 HDi ZBP/MD/MF ; ZCP/MD MH/MM | D | 2798 | F28TDCR | M | - | TSW | 01/02 ▸ 06/06 | 133097 | **731611** | 790 414,5 ALM |
| **DACIA** | | | | | | | | | | |
| **DUSTER (2010>)** | | | | | | | | | | |
| 1.5 dCi 110 HSMC | D | 1461 | K9K.8.96,K9K.8.98 | M | +/- | | 03/10 ▸ | 8200880550 | •**735279** | 382 628 ALB |
| **LOGAN** | | | | | | | | | | |
| 1.6 MPI GPL KS0D | F | 1598 | K7M.7.18 | M | + | TSW | 10/06 ▸ | 8200343476 | **732721** | 480 414,5 ALM |
| 1.6 MPI GPL KS0D | F | 1598 | K7M.7.18 | M | - | TSW | 10/06 ▸ | 7700428082 | **732621** | 480 414,5 ALM |
| 1.4 MPI LS0A ; KS0C ; KS0E LS0C ; LS0G ; FS0B ; LS0E ; FS0A ; FS0E KS0A | E | 1390 | K7J.7.10 | M | + | TSW | 09/04 ▸ | 8200343476 | **732721** | 480 414,5 ALM |
| 1.4 MPI LS0A ; LS0C ; LS0E LS0G | E | 1390 | K7J.7.10 | M | +/- | TSW | 09/04 ▸ | 7700428082 | **732621** | 480 414,5 ALM |
| 1.4 MPI LS0E ; LS0C ; LS0G LS0A | E | 1390 | K7J.7.10 | M | - | TSW | 09/04 ▸ | 7700838134 | **731378** | 430 377,5 ALM |
| 1.6 i 16V LS0P ; LS0M ; LS0V LS0L | E | 1598 | K4M.6.90,K4M.6.94 | M | +/- | TSW | 10/06 ▸ | 8200343476 | **732721** | 480 414,5 ALM |
| 1.6 MPI,1.6 i 90 KS0D ; LS0H ; US0D FS0F ; US0F ; KS0H ; LS0B ; LS0F ; LS0D LS0T ; US0B | E | 1598 | K7M.7.10,K7M.7.14 | M | +/- | TSW | 09/04 ▸ | 7700428082 | **732621** | 480 414,5 ALM |
| 1.6 MPI KS0B ; KS0F ; KS0H KS0D ; FS0F | E | 1598 | K7M.7.10 | M | + | TSW | 10/06 ▸ | 8200343476 | **732721** | 480 414,5 ALM |
| 1.6 i 16V KS0M ; KS0P | E | 1598 | K4M.6.90 | M | + | TSW | 10/06 ▸ 11/08 | 8200189288 | **732817** | 585 414,5 ALM |
| 1.6 MPI,1.6 i 90 LS0D ; LS0F ; LS0H LS0B ; KS0D ; US0F ; KS0H ; LS0T ; US0B FS0F ; US0D | E | 1598 | K7M.7.10,K7M.7.14 | M | +/- | TSW | 09/04 ▸ | 7700838134 | **731378** | 430 377,5 ALM |
| 1.6 i 16V KS0P ; KS0M | E | 1598 | K4M.6.90 | M | - | TSW | 10/06 ▸ 11/08 | 8200343476 | **732721** | 480 414,5 ALM |
| 1.6 i 90 US0B ; US0F ; US0H US0D | E | 1598 | K7M.7.10 | M | | TSW | 01/08 ▸ | 8200343476 | **732721** | 480 414,5 ALM |
| 1.5 dCi,1.5 dCi 70 LS0Y ; LS0J ; KS00 LS0K ; US0K ; KS0K ; LS00 ; KS0J ; LS0W | D | 1461 | K9K.7.90,K9K.7.92,K9K.7.94 K9K.7.96 | M | + | TSW | 09/05 ▸ | 8200189288 | **732817** | 585 414,5 ALM |
| 1.5 dCi,1.5 dCi 70 LS00 ; LS0J ; LS0Y 1.5 dCi 85 KS0K ; KS0W ; LS0K LS0W ; US0W ; KS00 ; KS0J ; FS0J ; FS0K US0K | D | 1461 | K9K.7.90,K9K.7.92,K9K.7.94 K9K.7.96 | M | - | TSW | 09/05 ▸ | 8200343476 | **732721** | 480 414,5 ALM |
| **SANDERO** | | | | | | | | | | |
| 1.0 i 16V BS0R | F | 999 | D4D.7.60 | M | + | TSW | 02/09 ▸ | 8200343476 | **732721** | 480 414,5 ALM |

Radiator Radiateur Motorkühler Radiatore di raffreddamento Radiator Radyatör Radiador Радиатор vízhűtő Vodní chladič Radiator Ψυγείο



• **New** Nouveau **Nuevo** Novo **Nuovo** Nieuw **Neu** Nowość **Yeni** Новый Νέο **Nový**

| | Type Ctr. | | CC | | | AC | | | OE | Valeo | DIM. | TECH |
|---|---|---|---|---|---|---|---|---|---|---|---|---|
| **DACIA (.../...)** | | | | | | | | | | | | |
| **SANDERO (.../...)** | | | | | | | | | | | | |
| 1.5 dCi,1.5 dCi 65 | BS0K ; BS0W ; BS0J | D | 1461 | K9K.7.90,K9K.7.92,K9K.7.96 | M | - | TSW | 06/08 ▸ | 8200343476 | **732721** | 480 414,5 | ALM |
| **SOLENZA** | | | | | | | | | | | | |
| 1.4 i | B41B ; B41C ; B41A | E | 1390 | EJ7.262 | M | + | TSW | 04/03 ▸ 03/05 | 8200343476 | **732721** | 480 414,5 | ALM |
| 1.4 i | B41A ; B41C ; B41B | E | 1390 | EJ7.262 | M | - | TSW | 04/03 ▸ 03/05 | 7700838134 | **731378** | 430 377,5 | ALM |
| 1.9 D | B41G ; B41E ; B41F | D | 1870 | F8Q.636 | M | | TSW | 04/03 ▸ 03/05 | 8200343476 | **732721** | 480 414,5 | ALM |
| **DAEWOO** | | | | | | | | | | | | |
| **ARANOS** | | | | | | | | | | | | |
| 1.5 i 16V | JF19V1 | E | 1498 | A15MF | M | +/- | | 07/96 ▸ 10/97 | 96109532 | **734766** | 635 382 | ALB |
| 1.8 i | JF19B1 ; JF19B | E | 1796 | C18LE | M | +/- | | 02/95 ▸ 07/05 | 96109532 | **734766** | 635 382 | ALB |
| 2.0 i | JF19Y1 | E | 1998 | C20LE | M | +/- | | 02/95 ▸ 04/98 | 96109532 | **734766** | 635 382 | ALB |
| **ESPERO** | | | | | | | | | | | | |
| 1.5 i 16V | JF19V1 | E | 1498 | A15MF | M | +/- | | 09/93 ▸ 05/99 | 96109532 | **734766** | 635 382 | ALB |
| 1.8 i | JF19B1 | E | 1796 | C18LE | M | +/- | | 09/93 ▸ 05/99 | 96109532 | **734766** | 635 382 | ALB |
| 2.0 i | JF19Y1 | E | 1998 | C20LE | M | +/- | | 09/93 ▸ 05/99 | 96109532 | **734766** | 635 382 | ALB |
| 2.0 i | JA19Y1 | E | 1998 | C20LE | A | +/- | | 09/93 ▸ 05/99 | 96182648 | **734761** | 635 382 | ALB |
| **KALOS** | | | | | | | | | | | | |
| 1.4 i GPL 16V<br>289306 ▸ | | G | 1399 | E-TECII-G | M | + | | 01/03 ▸ 07/05 | 96536669 | **735158** | 600 414 | ALB |
| 1.4 i GPL 16V | | G | 1399 | E-TECII-G | M | | | 01/03 ▸ 07/05 | 96536523 | **735157** | 480 416 | ALB |
| 1.4 i GPL 16V<br>▸ 289305 | | G | 1399 | E-TECII-G | M | + | | 01/03 ▸ | 96536525 | **735158** | 600 414 | ALB |
| 1.2 i<br>289306 ▸ | KLASF4 | E | 1150 | T4 | M | + | | 01/03 ▸ 07/05 | 96536669 | **735158** | 600 414 | ALB |
| 1.2 i | KLASF4 | E | 1150 | T4 | M | | | 01/03 ▸ 07/05 | 96536523 | **735157** | 480 416 | ALB |
| 1.2 i<br>▸ 289305 | KLASF4 | E | 1150 | T4 | M | + | | 01/03 ▸ | 96536525 | **735158** | 600 414 | ALB |
| 1.4 i,1.4 i 16V<br>289306 ▸ | KLASF4 ; KLASF6 | E | 1399 | E-TECII | M | + | | 09/02 ▸ 07/05 | 96536669 | **735158** | 600 414 | ALB |
| 1.4 i,1.4 i 16V | KLASF4 ; KLASF6 | E | 1399 | E-TECII | M | | | 09/02 ▸ 07/05 | 96536523 | **735157** | 480 416 | ALB |
| 1.4 i,1.4 i 16V | KLASF4 ; KLASF6 | E | 1399 | E-TECII | M | + | | 09/02 ▸ | 96536525 | **735158** | 600 414 | ALB |
| **LACETTI** | | | | | | | | | | | | |
| 1.6 i GPL 16V | | G | 1598 | A16DMS-G | M | | | 10/03 ▸ | 96181369 | **734252** | 655 380 | ALB |
| 1.8 i GPL 16V | | G | 1799 | H18D-G | M | | | 10/03 ▸ 12/04 | 96553378 | **735159** | 702 377 | ALB |
| 1.4 i 16V | KLANF1 | E | 1399 | E-TECII | M | | | 01/04 ▸ 12/04 | 96553378 | **735159** | 702 377 | ALB |
| 1.4 i 16V | KLANA1 | E | 1399 | E-TECII | A | | | 01/04 ▸ 12/04 | 96553378 | **735159** | 702 377 | ALB |
| 1.6 i 16V | KLANF1 | E | 1598 | A16DMS | M | | | 10/03 ▸ | 96181369 | **734252** | 655 380 | ALB |
| 1.6 i 16V | KLANA1 | E | 1598 | A16DMS | A | | | 10/03 ▸ | 96181369 | **734252** | 655 380 | ALB |
| 1.8 i 16V | KLANF1 | E | 1799 | H18D | M | | | 10/03 ▸ 12/04 | 96553378 | **735159** | 702 377 | ALB |
| **LANOS** | | | | | | | | | | | | |
| 1.3 i | TF69CE ; TF48CE ; TF08CE | E | 1349 | A13SMS | M | +/- | | 09/97 ▸ 07/05 | 96182261 | **734248** | 635 400 | ALB |
| 1.5 i | TF08YE ; TF69YE ; TF48YE | E | 1498 | A15SMS | M | +/- | | 09/97 ▸ 07/05 | 96182261 | **734248** | 635 400 | ALB |
| 1.5 i | TA08YE ; TA69YE ; TA48YE | E | 1498 | A15SMS | A | +/- | | 09/97 ▸ 07/05 | 96182260 | **734249** | 635 400 | ALB |
| 1.6 i 16V | TF486E ; TF086E<br>TF696E | E | 1598 | A16DMS | M | +/- | | 09/97 ▸ 07/05 | 96182261 | **734248** | 635 400 | ALB |
| 1.6 i 16V | TA696E ; TA486E<br>TA086E | E | 1598 | A16DMS | A | +/- | | 09/97 ▸ 07/05 | 96182260 | **734249** | 635 400 | ALB |
| **LEGANZA** | | | | | | | | | | | | |
| 2.0 i 16V | AVF69Z | E | 1998 | X20SED | M | +/- | | 09/97 ▸ 01/03 | 96273596 | **734767** | 654 380 | ALB |
| 2.0 i 16V | AVF69Z | E | 1998 | X20SED | A | +/- | | 09/97 ▸ 01/03 | 96351103 | **734764** | 654 380 | ALB |
| 2.2 i 16V | AVF692 | E | 2198 | X22SED | M | +/- | | 01/99 ▸ 01/03 | 96273596 | **734767** | 654 380 | ALB |
| 2.2 i 16V | AVF692 | E | 2198 | X22SED | A | +/- | | 01/99 ▸ 01/03 | 96351103 | **734764** | 654 380 | ALB |
| **MATIZ (98>2000)** | | | | | | | | | | | | |
| 0.8 i | Y4A11 | E | 796 | F8CV | M | +/- | | 03/98 ▸ 09/00 | 96314162 | **734250** | 460 295 | ALB |
| **MATIZ (2000>)** | | | | | | | | | | | | |
| 0.8 i | 4M12BD | E | 796 | F8CV | M | +/- | | 10/00 ▸ 01/05 | 96322941 | **734251** | 458 295 | ALB |
| **NEXIA** | | | | | | | | | | | | |
| 1.5,1.5 16V | TF08V1 ; TF19Y1<br>TF68V1 ; TF08Y1 ; TF19V1 ; TF68Y1 | E | 1498 | A15MF,G15MF | M | +/- | TSW 819759 | 03/95 ▸ 07/05 | 96144847 | **732483** | 635 382 | ALB |

| Type Ctr. | | CC | | AC | | | OE | Valeo | DIM. | TECH |
|---|---|---|---|---|---|---|---|---|---|---|
| **DAEWOO (.../...)** | | | | | | | | | | |
| **NEXIA (.../...)** | | | | | | | | | | |
| 1.5 16V TA19V1 ; TA08V1 TA68V1 | E | 1498 | A15MF | A | + | TSW 819759 | 03/95 ▸ 07/05 | 96144850 | **734596** | 635 382 | ALB |
| 1.5 16V TA19V1 ; TA68V1 TA08V1 | E | 1498 | A15MF | A | - | TSW 819759 | 03/95 ▸ 07/05 | 96144570 | **734596** | 635 382 | ALB |
| 1.8 | E | 1796 | C18LE | M | | TSW 819774 | 09/95 ▸ 08/97 | 96109532 | **734766** | 635 382 | ALB |
| **NUBIRA (97>99)** | | | | | | | | | | |
| 1.6 i 16V JF486E ; JF356E JF696E | E | 1598 | A16DMS | M | + | TSW 819774 | 09/97 ▸ 05/99 | 96181369 | **734252** | 655 380 | ALB |
| 1.6 i 16V JA356E ; JA696E JA486E | E | 1598 | A16DMS | A | +/- | TSW 820031 | 09/97 ▸ 05/99 | 96351931 | **734765** | 654 380 | ALB |
| 2.0 i 16V,2.0 i 8V JF69WE ; JF35ZE JF35WE ; JF48ZE ; JF48WE ; JF69ZE | E | 1998 | DTEC20,X20S | M | + | TSW 820031 | 09/97 ▸ 05/99 | 96181369 | **734252** | 655 380 | ALB |
| 2.0 i 16V JA48ZE ; JA69ZE JA35ZE | E | 1998 | DTEC20 | A | +/- | | 09/97 ▸ 05/99 | 96351931 | **734765** | 654 380 | ALB |
| **NUBIRA (99>2003)** | | | | | | | | | | |
| 1.6 i 16V JF356E ; JF696E JF486E | E | 1598 | A16DMS | M | + | | 06/99 ▸ 09/04 | 96273596 | **734767** | 654 380 | ALB |
| 1.6 i 16V JA486E ; JA356E JA696E | E | 1598 | A16DMS | A | +/- | | 06/99 ▸ 09/04 | 96273594 | **734764** | 654 380 | ALB |
| 2.0 i,2.0 i 16V JF482E ; JF69WE JF352E ; JF692E ; JF48WE | E | 1998 | X20NED,X20SED | M | + | | 06/99 ▸ 09/04 | 96273596 | **734767** | 654 380 | ALB |
| 2.0 i,2.0 i 16V JA48WE ; JA482E JA69WE ; JA352E ; JA692E | E | 1998 | X20NED,X20SED | A | +/- | | 06/99 ▸ 09/04 | 96351103 | **734764** | 654 380 | ALB |
| **NUBIRA (2003>)** | | | | | | | | | | |
| 1.6 i GPL 16V | G | 1598 | A16DMS-G | M | | | 07/03 ▸ 07/05 | 96181369 | **734252** | 655 380 | ALB |
| 1.6 i 16V KLAJF3 ; KLAJF6 | E | 1598 | A16DMS | M | | | 07/03 ▸ 07/05 | 96181369 | **734252** | 655 380 | ALB |
| **REXTON** | | | | | | | | | | |
| 3.2 i | E | 3199 | M162E32 | A | | | 06/02 ▸ 07/05 | 2131005112 | | 415 680 | ALB |
| **REZZO** | | | | | | | | | | |
| 1.6 i GPL 16V UF7561 | G | 1598 | A16DMS-G | M | | | 02/02 ▸ | 96181369 | **734252** | 655 380 | ALB |
| 2.0 i GPL 16V UF75Z1 | G | 1998 | X20SED-G | M | | | 09/00 ▸ 07/05 | 96271475 | **735266** | 370 702 | ALB |
| 1.6 i 16V UF7561 | E | 1598 | A16DMS | M | | | 02/02 ▸ | 96181369 | **734252** | 655 380 | ALB |
| 1.8 i UF75HE | E | 1761 | F18S2 | M | +/- | | 04/00 ▸ 02/02 | 96271477 | **734762** | 370 702 | ALB |
| 1.8 i UA75HE | E | 1761 | F18S2 | A | +/- | | 05/00 ▸ 02/02 | 96271475 | **735266** | 370 702 | ALB |
| 2.0 i 16V UF75ZE | E | 1998 | X20SED | M | +/- | | 09/00 ▸ 07/05 | 96271477 | **734762** | 370 702 | ALB |
| 2.0 i 16V UF75ZE | E | 1998 | X20SED | M | | | 09/01 ▸ 07/05 | 96271475 | **735266** | 370 702 | ALB |
| 2.0 i 16V UA75ZE | E | 1998 | X20SED | A | +/- | | 09/00 ▸ 07/05 | 96271475 | **735266** | 370 702 | ALB |
| 2.0 i 16V UF75ZE | E | 1998 | X20SED | A | | | 09/01 ▸ 07/05 | 96271475 | **735266** | 370 702 | ALB |
| **TACUMA** | | | | | | | | | | |
| 1.6 i 16V | E | 1598 | A16DMS | M | | | 02/02 ▸ | 96181369 | **734252** | 655 380 | ALB |
| 1.8 i UF75HE | E | 1761 | F18S2 | M | +/- | | 06/00 ▸ 07/05 | 96271477 | **734762** | 370 702 | ALB |
| 1.8 i UA75HE | E | 1761 | F18S2 | A | +/- | | 06/00 ▸ 07/05 | 96271475 | **735266** | 370 702 | ALB |
| 2.0 i 16V UF75ZE | E | 1998 | X20SED | M | +/- | | 06/00 ▸ 07/05 | 96271477 | **734762** | 370 702 | ALB |
| 2.0 i 16V UA75ZE | E | 1998 | X20SED | A | +/- | | 06/00 ▸ 07/05 | 96271475 | **735266** | 370 702 | ALB |
| **DAIHATSU** | | | | | | | | | | |
| **APPLAUSE (A100) (89>97)** | | | | | | | | | | |
| 1.6,1.6 i A111R ; A101R A101L ; A111L | E | 1589 | HD-C,HD-E | M | | | 06/89 ▸ 04/94 | 1640087139000 | | 325 668 | ALB |
| 1.6,1.6 i A101L ; A101R | E | 1589 | HD-C,HD-E | M | | | 06/89 ▸ 06/92 | 1640087137000 | | 325 668 | ALB |
| 1.6 i A101L | E | 1589 | HD-E | M | | TSW | 09/97 ▸ 09/97 | 1640087F42000 | **731620** | 325 662 | ALB |
| 1.6 i A101L | E | 1589 | HD-E | A | | TSW | 09/97 ▸ 09/97 | 1640087F41000 | **734103** | 325 638 | ALB |
| **APPLAUSE (A101) (97>)** | | | | | | | | | | |
| 1.6 i A101L | E | 1589 | HD-E | M | | TSW | 09/97 ▸ 05/00 | 1640087F42000 | **731620** | 325 662 | ALB |
| 1.6 i A101L | E | 1589 | HD-E | M | | TSW | 09/97 ▸ 05/00 | 1640087F37000 | **734102** | 325 638 | ALB |
| 1.6 i A101L | E | 1589 | HD-E | A | | TSW | 09/97 ▸ 05/00 | 1640087F41000 | **734103** | 325 638 | ALB |
| 1.6 i A101L | E | 1589 | HD-E | A | | TSW | 09/97 ▸ 05/00 | 1640087F37000 | **734102** | 325 638 | ALB |
| 1.6 i A101L | E | 1589 | HD-E | A | | TSW | 09/97 ▸ 05/00 | 1640087F42000 | **731620** | 325 662 | ALB |
| **CHARADE (G11/30) (83>86)** | | | | | | | | | | |
| 1.0 G11RG | E | 993 | CB | M | | | 02/83 ▸ 01/85 | 1640087739000 | | 350 340 | CBS |

Radiator Ψυγείο Vodní chladič Радиатор vízhűtő Radiador Radiator Radyatör Radiator Radiatore di raffreddamento Motorkühler Radiateur Radiator



• **New** Nouveau **Nuevo** Novo **Nuovo** Nieuw **Neu** Nowość **Yeni** Новый Νέο **Nový**

# DAIHATSU (.../...)

## CHARADE (G11/30) (83>86) (.../...)

| | Type Ctr. | | CC | | AC | | | OE | Valeo | DIM. | | TECH |
|---|---|---|---|---|---|---|---|---|---|---|---|---|
| 1.0 Turbo | G11RF | E | 993 | CB50 | M | | | 12/83 ▸ 01/85 | 1640087751000 | | 350 | 340 | CBS |
| 1.0 Turbo | G11RF | E | 993 | CB50 | M | | | 01/85 ▸ 12/86 | 1640087770000 | 731856 | 352 | 408 | CBS |
| 1.0 | G11RG | E | 993 | CB | M | | | 01/85 ▸ 12/86 | 1640087768000 | 731020 | 352 | 348 | CBS |
| 1.0 | G11LG ; G11LF ; G11RG | E | 993 | CB | A | | | 02/83 ▸ 01/85 | 1640087747000 | | 352 | 348 | CBS |
| 1.0 | G11RG | E | 993 | CB | A | | | 02/83 ▸ 01/85 | 1640087738000 | | 350 | 340 | CBS |
| 1.0 | G11LF ; G11RG ; G11LG | E | 993 | CB | A | | | 01/85 ▸ 12/86 | 1640087769000 | 731019 | 352 | 388 | CBS |
| 1.0 | G11RG | E | 993 | CB | A | | | 01/85 ▸ 12/86 | 1640087767000 | 731020 | 352 | 348 | CBS |
| 1.0 D | G30RG ; G30LF ; G30LG | D | 993 | CL11 | M | | | 07/83 ▸ 01/85 | 1640087748000 | | 352 | 348 | CBS |
| 1.0 TD | G30RG ; G30LG G30LF | D | 993 | CL | M | | | 02/85 ▸ 01/86 | 1640087752000 | 731625 | 282 | 328 | CBS |

## CHARADE (G100) (87>93)

| | | | | | | | | | | | | | |
|---|---|---|---|---|---|---|---|---|---|---|---|---|---|
| 1.0 | G100R ; G100L | E | 993 | CB23 | M | | | 02/87 ▸ 01/93 | 1640087768000 | 731020 | 352 | 348 | CBS |
| 1.0 | G100L ; G100R | E | 993 | CB23 | M | | | 02/87 ▸ 01/93 | 1640087767000 | 731020 | 352 | 348 | CBS |
| 1.0 | G100L | E | 993 | CB23 | M | | | 02/87 ▸ 01/93 | 1640087F07000 | 731019 | 352 | 388 | CBS |
| 1.0,1.0 Turbo,1.0 i | G100L ; G100R | E | 993 | CB23,CB61,CB90 | M | | | 02/87 ▸ 01/93 | 1640087770000 | 731856 | 352 | 408 | CBS |
| 1.0,1.0 i | G100L | E | 993 | CB23,CB90 | M | | | 04/91 ▸ 01/93 | 1640087218000 | 730397 | 282 | 348 | CBS |
| 1.0 | G100R ; G100L | E | 993 | CB23 | A | | | 02/87 ▸ 01/93 | 1640087F07000 | 731019 | 352 | 388 | CBS |
| 1.0 | G100L | E | 993 | CB23 | A | | | 04/91 ▸ 01/93 | 1640087218000 | 730397 | 282 | 348 | CBS |
| 1.3 i | G112L | E | 1295 | HC-E | M | | | 09/88 ▸ 01/93 | 1640087F12000 | 734104 | 352 | 388 | ALB |
| 1.3,1.3 i | G102L ; G102R | E | 1295 | HC-C,HC-E | A | | | 09/88 ▸ 01/93 | 1640087F12000 | 734104 | 352 | 388 | ALB |

## CHARADE (G200) (93>2001)

| | | | | | | | | | | | | | |
|---|---|---|---|---|---|---|---|---|---|---|---|---|---|
| 1.0 | G202L | E | 993 | CB23 | M | | TSW | 08/93 ▸ 10/95 | 1640087F45000 | 731857 | 325 | 377 | CBS |
| 1.0 | G202L | E | 993 | CB23 | M | | TSW | 08/93 ▸ 04/94 | 1640087F48000 | 731857 | 325 | 377 | CBS |
| 1.0 | G202L | E | 993 | CB23 | M | | TSW | 04/94 ▸ 10/95 | 1640087F46000 | 734210 | 325 | 348 | ALB |
| 1.3 i 16V | G200R | E | 1295 | HC-E | M | | TSW | 03/93 ▸ 10/95 | 1640087F42000 | 731620 | 325 | 662 | ALB |
| 1.3 i 16V | G200R ; G200L | E | 1295 | HC-E | M | | TSW | 03/93 ▸ 03/01 | 1640087F48000 | 731857 | 325 | 377 | CBS |
| 1.3 i 16V | G200L ; G200R | E | 1295 | HC-E | M | | TSW | 03/93 ▸ | 1640087F45000 | 731857 | 325 | 377 | CBS |
| 1.3 i 16V | G200R ; G200L | E | 1295 | HC-E | M | | TSW | 04/94 ▸ 03/01 | 1640087F46000 | 734210 | 325 | 348 | ALB |
| 1.3 i 16V | G200R | E | 1295 | HC-E | M | | TSW | 06/94 ▸ 10/95 | 1640087F29000 | 731620 | 325 | 662 | ALB |
| 1.3 i 16V | G200R ; G200L | E | 1295 | HC-E | M | | TSW | 10/95 ▸ | 1640087F44000 | 734210 | 325 | 348 | ALB |
| 1.3 i 16V | G200L ; G200R | E | 1295 | HC-E | A | | TSW | 03/93 ▸ | 1640087F43000 | 734210 | 325 | 348 | ALB |
| 1.3 i 16V | G200L ; G200R | E | 1295 | HC-E | A | | TSW | 03/93 ▸ 03/01 | 1640087F47000 | 734210 | 325 | 348 | ALB |
| 1.3 i 16V | G200R | E | 1295 | HC-E | A | | TSW | 03/93 ▸ 10/95 | 1640087F41000 | 734103 | 325 | 638 | ALB |
| 1.3 i 16V | G200R | E | 1295 | HC-E | A | | TSW | 06/94 ▸ 10/95 | 1640087F33000 | 734103 | 325 | 638 | ALB |
| 1.3 i 16V | G204L | E | 1296 | HC-U | M | | TSW | 09/97 ▸ | 1640087F44000 | 734210 | 325 | 348 | ALB |
| 1.3 i 16V | G204L | E | 1296 | HC-U | M | | TSW | 09/97 ▸ 06/00 | 1640087F46000 | 734210 | 325 | 348 | ALB |
| 1.5 i 16V | G203L | E | 1499 | HEE | M | | TSW | 06/94 ▸ 06/00 | 1640087F42000 | 731620 | 325 | 662 | ALB |
| 1.5 i 16V | G203R ; G203L | E | 1499 | HEE | M | | TSW | 06/94 ▸ 10/95 | 1640087F45000 | 731857 | 325 | 377 | CBS |
| 1.5 i 16V | G203L ; G203R | E | 1499 | HEE | M | | TSW | 10/95 ▸ | 1640087F44000 | 734210 | 325 | 348 | ALB |
| 1.5 i 16V | G203L ; G203R | E | 1499 | HEE | M | | TSW | 10/95 ▸ 03/01 | 1640087F46000 | 734210 | 325 | 348 | ALB |
| 1.5 i 16V | G203L | E | 1499 | HEE | A | | TSW | 06/94 ▸ 12/98 | 1640087F41000 | 734103 | 325 | 638 | ALB |
| 1.5 i 16V | G203L ; G203R | E | 1499 | HEE | A | | TSW | 06/94 ▸ 03/01 | 1640087F47000 | 734210 | 325 | 348 | ALB |
| 1.5 i 16V | G203L ; G203R | E | 1499 | HEE | A | | TSW | 06/94 ▸ | 1640087F43000 | 734210 | 325 | 348 | ALB |
| 1.5 i 16V | G203L | E | 1499 | HEE | A | | TSW | 12/98 ▸ 06/00 | 1640087F37000 | 734102 | 325 | 638 | ALB |
| 1.6 i 16V | G201L ; G201R | E | 1589 | HD-E | M | | TSW | 03/93 ▸ 05/96 | 1640087F45000 | 731857 | 325 | 377 | CBS |
| 1.6 i 16V | G201R ; G201L | E | 1589 | HD-E | M | | TSW | 03/93 ▸ 10/95 | 1640087F48000 | 731857 | 325 | 377 | CBS |
| 1.6 i 16V | G201L ; G201R | E | 1589 | HD-E | M | | TSW | 10/95 ▸ 05/96 | 1640087F46000 | 734210 | 325 | 348 | ALB |

## CUORE (L40) (77>80)

| | | | | | | | | | | | | | |
|---|---|---|---|---|---|---|---|---|---|---|---|---|---|
| 550 | L40 | E | 547 | AB | M | | | 01/77 ▸ 02/79 | 1640087717000 | 731625 | 282 | 328 | CBS |
| 550 | L40 | E | 547 | AB | M | | | 02/79 ▸ 07/80 | 1640087723000 | 731625 | 282 | 328 | CBS |

## CUORE (L55/60) (80>85)

| | | | | | | | | | | | | | |
|---|---|---|---|---|---|---|---|---|---|---|---|---|---|
| 550 | L55RE ; L55LF ; L55RF ; L55LE | E | 547 | AB | M | | | 08/80 ▸ 08/85 | 1640087752000 | 731625 | 282 | 328 | CBS |
| 550 | L55LF ; L55LE ; L55RE ; L55RF | E | 547 | AB | M | | | 08/80 ▸ 05/82 | 1640087727000 | 734101 | 350 | 318 | ALB |
| 600 | L60LF ; L60LE | E | 659 | AD | M | | | 09/81 ▸ 05/82 | 1640087727000 | 734101 | 350 | 318 | ALB |
| 600 | L60RF ; L60LE ; L60RE ; L60LF | E | 659 | AD | M | | | 09/81 ▸ 08/85 | 1640087752000 | 731625 | 282 | 328 | CBS |

## CUORE (L80) (85>90)

| | | | | | | | | | | | | | |
|---|---|---|---|---|---|---|---|---|---|---|---|---|---|
| 850 | L80LS ; L80RS | E | 847 | ED | M | | | 08/85 ▸ 02/90 | 1640087218000 | 730397 | 282 | 348 | CBS |
| 850 | L81LS | E | 847 | ED | M | | | 09/86 ▸ 10/88 | 1640087220000 | | 327 | 348 | CBS |
| 850 | L80RS ; L80LS | E | 847 | ED | A | | | 09/86 ▸ 02/90 | 1640087226000 | 731623 | 327 | 328 | CBS |
| 850 | L80LS | E | 847 | ED | A | | | 09/86 ▸ 02/90 | 1640087217000 | 730397 | 282 | 348 | CBS |

## CUORE (L701) (98>)

| | | | | | | | | | | | | | |
|---|---|---|---|---|---|---|---|---|---|---|---|---|---|
| 1.0 i 12V | L701R ; L701L | E | 989 | EJ-DE,EJ-VE | M | | | 10/98 ▸ 03/03 | 1640097210000 | 734105 | 375 | 318 | ALB |

# DAIHATSU (.../...)

| Type Ctr. | | CC | | AC | | | OE | Valeo | DIM. | TECH |
|---|---|---|---|---|---|---|---|---|---|---|
| **CUORE (L701) (98>) (.../...)** | | | | | | | | | | |
| 1.0 i 12V L701L ; L701R | E | 989 | EJ-DE,EJ-VE | A | | | 10/98 ▸ 03/03 | 1640097210000 | **734105** | 375 318 ALB |
| **CUORE (04/2003>2005)** | | | | | | | | | | |
| 1.0 i 12V L251R ; L251L | E | 989 | EJ-VE | M | | | 04/03 ▸ 08/05 | 16400B2010000 | | 399 330 ALB |
| 1.0 i 12V L251L ; L251R | E | 989 | EJ-VE | M | | | 04/03 ▸ 08/05 | 16400B2070000 | **735257** | 400 316 |
| 1.0 i 12V L251R ; L251L | E | 989 | EJ-VE | A | | | 04/03 ▸ 08/05 | 16400B2070000 | **735257** | 400 316 |
| 1.0 i 12V L251R ; L251L | E | 989 | EJ-VE | A | | | 04/03 ▸ 08/05 | 16400B2010000 | | 399 330 ALB |
| **DOMINO (L55/60) (80>85)** | | | | | | | | | | |
| 550 L55LE ; L55LF | E | 547 | AB | M | | | 04/81 ▸ 05/82 | 1640087727000 | **734101** | 350 318 ALB |
| 550 Turbo L55 | E | 547 | AB | M | | | 10/83 ▸ 1985 | 1640087752000 | **731625** | 282 328 CBS |
| 600 L60LE ; L60LF ; L60RF | E | 659 | AD | M | | | 05/82 ▸ 08/85 | 1640087752000 | **731625** | 282 328 CBS |
| **DOMINO (L80) (85>90)** | | | | | | | | | | |
| 850 L80LS ; L80RS | E | 847 | ED | M | | | 08/85 ▸ 02/90 | 1640087218000 | **730397** | 282 348 CBS |
| 850 L80RS ; L80LS | E | 847 | ED | M | | | 08/85 ▸ 02/90 | 1640087217000 | **730397** | 282 348 CBS |
| 850 L81LS | E | 847 | ED | M | | | 09/86 ▸ 10/88 | 1640087221000 | | 327 348 CBS |
| 850 L80RS ; L80LS | E | 847 | ED | A | | | 09/86 ▸ 02/90 | 1640087226000 | **731623** | 327 328 CBS |
| **DOMINO (L701) (98>)** | | | | | | | | | | |
| 1.0 i 12V L701L | E | 989 | EJ-DE | M | | | 10/98 ▸ 06/00 | 1640097210000 | **734105** | 375 318 ALB |
| **GRAN MOVE** | | | | | | | | | | |
| 1.5 i G303R ; G303L | E | 1499 | HEE | M | | TSW | 08/96 ▸ 06/98 | 1640087F46000 | **734210** | 325 348 ALB |
| 1.5 i G303L | E | 1499 | HEE | M | | TSW | 08/96 ▸ 06/98 | 1640087F42000 | **731620** | 325 662 ALB |
| 1.5 i G303R ; G303L | E | 1499 | HEE | M | | TSW | 02/97 ▸ 06/98 | 1640087F44000 | **734210** | 325 348 ALB |
| 1.5 i G303L | E | 1499 | HEE | A | | TSW | 08/96 ▸ 06/98 | 1640087F41000 | **734103** | 325 638 ALB |
| 1.5 i G303L ; G303R | E | 1499 | HEE | A | | TSW | 08/96 ▸ 06/98 | 1640087F47000 | **734210** | 325 348 ALB |
| 1.5 i G303L ; G303R | E | 1499 | HEE | A | | TSW | 02/97 ▸ 06/98 | 1640087F43000 | **734210** | 325 348 ALB |
| 1.6 i 16V G301L ; G301R | E | 1589 | HD-EP | M | | TSW | 06/98 ▸ 07/02 | 1640087F42000 | **731620** | 325 662 ALB |
| 1.6 i 16V G301R ; G301L | E | 1589 | HD-EP | M | | TSW | 09/99 ▸ 07/02 | 1640087F48000 | **731857** | 325 377 CBS |
| 1.6 i 16V G301L ; G301R | E | 1589 | HD-EP | A | | TSW | 06/98 ▸ 07/02 | 1640087F37000 | **734102** | 325 638 ALB |
| **MOVE (L601) (97>99)** | | | | | | | | | | |
| 0.8 i L601L ; L601R | E | 847 | ED-20 | M | | | 01/97 ▸ 03/99 | 1640087286000 | **734209** | 350 325 ALB |
| 0.8 i L601R ; L601L | E | 847 | ED-20 | A | | | 01/97 ▸ 03/99 | 1640087294000 | **734208** | 352 328 ALB |
| **MOVE (L901) (99>)** | | | | | | | | | | |
| 1.0 i 12V L901L ; L901R | E | 989 | EJ-DE,EJ-VE | M | | type Toyo | 04/99 ▸ 09/02 | 1640097201000 | **734106** | 375 316 ALB |
| 1.0 i 12V L901L ; L901R | E | 989 | EJ-DE,EJ-VE | M | | | 04/99 ▸ 09/02 | 1640097210000 | **734105** | 375 318 ALB |
| 1.0 i 12V L901L ; L901R | E | 989 | EJ-DE,EJ-VE | A | | type Toyo | 04/99 ▸ 09/02 | 1640097201000 | **734106** | 375 316 ALB |
| 1.0 i 12V L901L ; L901R | E | 989 | EJ-DE,EJ-VE | A | | | 04/99 ▸ 09/02 | 1640097210000 | **734105** | 375 318 ALB |
| **SIRION** | | | | | | | | | | |
| 1.0 i 12V M110R ; M100R M100L ; M110L | E | 989 | EJ-DE,EJ-VE | M | | | 04/98 ▸ 01/05 | 1640097210000 | **734105** | 375 318 ALB |
| 1.0 i 12V M100R ; M110R M100L ; M110L | E | 989 | EJ-DE,EJ-VE | A | | type Toyo | 04/98 ▸ 01/05 | 1640097201000 | **734106** | 375 316 ALB |
| **SIRION II** | | | | | | | | | | |
| 1.0 i 12V M300L ; M300R | E | 998 | 1KR-FE | M | | | 02/05 ▸ | 16400B1010000 | **735259** | 400 312 ALB |
| 1.3 i 16V M301R ; M301L | E | 1298 | K3-VE | M | | | 02/05 ▸ | 16400B1010000 | **735259** | 400 312 ALB |
| 1.3 i 16V M301L ; M301R | E | 1298 | K3-VE | A | | | 02/05 ▸ | 16400B1010000 | **735259** | 400 312 ALB |
| 1.5 i VVT 16V M303L ; M303R | E | 1495 | 3SZ-VE | M | | | 06/07 ▸ | 16400B1010000 | **735259** | 400 312 ALB |
| 1.5 i VVT 16V M303R ; M303L | E | 1495 | 3SZ-VE | A | | | 06/07 ▸ | 16400B1010000 | **735259** | 400 312 ALB |
| **TREVIS L651 (2006>)** | | | | | | | | | | |
| 1.0 i L651L ; L651R | E | 989 | EJ-VE/E4 | A | | | 09/06 ▸ | 16400B2070000 | **735257** | 400 316 |
| **VALERA (G203)** | | | | | | | | | | |
| 1.5 i G203L | E | 1499 | HEE | M | | TSW | 08/94 ▸ 10/95 | 1640087F45000 | **731857** | 325 377 CBS |
| 1.5 i G203L | E | 1499 | HEE | M | | TSW | 10/95 ▸ | 1640087F44000 | **734210** | 325 348 ALB |
| 1.5 i G203L | E | 1499 | HEE | M | | TSW | 10/95 ▸ 2001 | 1640087F46000 | **734210** | 325 348 ALB |
| 1.5 i G203L | E | 1499 | HEE | A | | TSW | 08/94 ▸ | 1640087F43000 | **734210** | 325 348 ALB |
| 1.5 i G203L | E | 1499 | HEE | A | | TSW | 08/94 ▸ 2001 | 1640087F47000 | **734210** | 325 348 ALB |
| **YRV** | | | | | | | | | | |
| 1.0 i 12V M200L ; M200R | E | 989 | EJ-VE | M | | | 08/00 ▸ 2007 | 1640097210000 | **734105** | 375 318 ALB |
| 1.3 i 16V M201L ; M201R M211R ; M211L | E | 1298 | K3-VE | M | | | 08/00 ▸ 2007 | 1640097406000 | | 375 449 ALB |

Radiator Radiateur Motorkühler Radiatore di raffreddamento Radiator Radyatör Radiador Радиатор vízhűtő Vodní chladič Radiator Ψυγείο



• **New** Nouveau **Nuevo** Novo **Nuovo** Nieuw **Neu** Nowość **Yeni** Новый Νέο **Novy**

| Type Ctr. | | CC | | AC | | | OE | Valeo | DIM. | TECH |
|---|---|---|---|---|---|---|---|---|---|---|
| **DAIHATSU (.../...)** | | | | | | | | | | |
| **YRV (.../...)** | | | | | | | | | | |
| 1.3 i 16V M211L ; M211R M201L ; M201R | E | 1298 | K3-VE | A | | | 08/00 ▸ 2007 | 1640097406000 | 375 449 | ALB |
| **FIAT** | | | | | | | | | | |
| **127** | | | | | | | | | | |
| 900 127A45 | E | 903 | 127GL.000 | M | - | | 03/80 ▸ 12/86 | 5882355 | **883428** 310 357 | ALM |
| 900 HACL ; HN ; 127/A1/A13/A1CL/A4/A44C/A45M/AC3 ACL3/AIC/AIIC/AS3 | E | 903 | 100GL.000,127GL.000 | M | - | | 03/71 ▸ 12/86 | 5882355 | **883428** 310 357 | ALM |
| 1050 127/A13/A1C3/A1CL | E | 1049 | 127A.000 | M | - | | 05/77 ▸ 06/81 | 5975052 | 310 396 | ALM |
| 1050 127A5 ; 147AA43 | E | 1049 | 127A.000 | M | - | | 1985 ▸ 1987 | 7500726 | 310 396 | ALM |
| 1300 127A7 | E | 1301 | 127A3.000 | M | - | | 07/81 ▸ 12/86 | 4883548 | 310 396 | ALM |
| 1300 D 127/AD ; 147/AD5 AD5C/AP | D | 1301 | 127A5.000 | M | - | | 02/81 ▸ 02/85 | 7503277 | 560 360 | ALM |
| **500** | | | | | | | | | | |
| 1.3 MJTD 312AXB1A01C/D | E | 1248 | 169A1 | M | | | 07/07 ▸ | 51835025 | **735498** 480 395 | ALB |
| **ALBEA** | | | | | | | | | | |
| 1.2 i 16V 178CYE1 | E | 1242 | 188A5.000 | M | | | 04/02 ▸ | 46826678 | **735296** 520 370 | |
| 1.2 i,1.2 i 16V 178/CYA1/CYE1 | E | 1242 | 188A4.000,188A5.000 | M | | TSW | 04/02 ▸ | 46833511 | **732948** 522 377,5 | ALM |
| 1.2 i 16V 178CYE1 | E | 1242 | 188A5.000 | A | | | 04/02 ▸ | 46826678 | **735296** 520 370 | |
| 1.6 i 16V 178CYC1 | E | 1596 | 182B6.000 | M | + | | 04/02 ▸ | 46826678 | **735296** 520 370 | |
| 1.6 i 16V 178CYC1 | E | 1596 | 182B6.000 | M | - | TSW | 04/02 ▸ | 46819261 | **732948** 522 377,5 | ALM |
| 1.3 JTD 16V 178CY | D | 1248 | 188A9.000 | M | | | 09/03 ▸ | 51718122 | **735297** 430 595 | |
| **BARCHETTA (95>2003)** | | | | | | | | | | |
| 1.8 i 16V 183SA1A | E | 1747 | 183A1.000 | M | +/- | | 05/95 ▸ 09/00 | 46773321 | **731979** 270 757 | CBS |
| 1.8 i 16V 183SB1A | E | 1747 | 188A6.000 | M | +/- | | 09/00 ▸ 06/03 | 46773719 | | |
| **BRAVA** | | | | | | | | | | |
| 1.2 i 16V 182BT1A | E | 1242 | 188A5.000 | M | + | TSW | 10/98 ▸ 03/02 | 46754746 | **732557** 475 414,5 | ALM |
| 1.2 i 16V 182/BP1A/BT1A | E | 1242 | 182B2.000,188A5.000 | M | + | TSW | 10/98 ▸ 03/02 | 71736183 | **732557** 475 414,5 | ALM |
| 1.2 i 16V 182/BP1A/BT1A | E | 1242 | 182B2.000,188A5.000 | M | + | TSW | 10/98 ▸ | 46537992 | **732557** 475 414,5 | ALM |
| 1.2 i 16V 182/BP1A/BT1A | E | 1242 | 182B2.000,188A5.000 | M | - | TSW | 10/98 ▸ 03/02 | 46480388 | **732218** 480 414,5 | ALM |
| 1.4 i 12V 182/BA1A/BG1A 4540396 ▸ | E | 1372 | 182A3.000,182A5.000 | M | + | TSW | 11/97 ▸ | 46525657 | **732557** 475 414,5 | ALM |
| 1.4 i 12V 182/BA1A/BG1A | E | 1372 | 182A3.000,182A5.000 | M | + | TSW | 11/97 ▸ 09/98 | 71736181 | **732557** 475 414,5 | ALM |
| 1.4 i 12V 182/BA1A/BG1A | E | 1372 | 182A3.000,182A5.000 | M | - | TSW | 06/95 ▸ 09/98 | 7776507 | **734239** 475 414,5 | ALM |
| 1.4 i 12V 182/BA1A/BG1A 4300175 ▸ 4540395 | E | 1372 | 182A3.000,182A5.000 | M | + | TSW | 10/96 ▸ 09/98 | 46420484 | **731981** 480 396 | ALM |
| 1.6 i 16V 182/BB1A/BH1A 4540396 ▸ | E | 1581 | 182A4.000,182A6.000 | M | + | TSW | 11/97 ▸ 04/98 | 46525657 | **732557** 475 414,5 | ALM |
| 1.6 i 16V 182/BB1A/BH1A | E | 1581 | 182A4.000,182A6.000 | M | + | TSW | 11/97 ▸ 04/98 | 71736181 | **732557** 475 414,5 | ALM |
| 1.6 i 16V 182/BB1A/BH1A | E | 1581 | 182A4.000,182A6.000 | M | + | TSW | 04/98 ▸ | 46529669 | **732557** 475 414,5 | ALM |
| 1.6 i 16V 182BB1A | E | 1581 | 182A4.000 | M | + | TSW | 04/98 ▸ 03/02 | 71736182 | **732557** 475 414,5 | ALM |
| 1.6 i 16V 182/BB1A/BH1A | E | 1581 | 182A4.000,182A6.000 | M | - | TSW | 06/95 ▸ 04/98 | 7776507 | **734239** 475 414,5 | ALM |
| 1.6 i 16V 182/BB1A/BH1A | E | 1581 | 182A4.000,182A6.000 | M | - | TSW | 04/98 ▸ 09/98 | 46480388 | **732218** 480 414,5 | ALM |
| 1.6 i 16V 182B01A | E | 1581 | 182A4.027 | M | - | TSW | 10/98 ▸ 03/02 | 46736955 | **731304** 460 414 | ALM |
| 1.6 i 16V 182BB1A | E | 1581 | 182A4.000 | M | - | TSW | 10/98 ▸ | 46529669 | **732557** 475 414,5 | ALM |
| 1.6 i 16V 182BB1A | E | 1581 | 182A4.000 | M | - | EXP, TSW | 10/98 ▸ 03/02 | 46534995 | **732788** 480 414,5 | ALM |
| 1.6 i 16V 182BB1A 4540396 ▸ | E | 1581 | 182A4.000 | A | + | TSW | 11/97 ▸ 04/98 | 46525657 | **732557** 475 414,5 | ALM |
| 1.6 i 16V 182BB1A | E | 1581 | 182A4.000 | A | + | TSW | 11/97 ▸ 04/98 | 71736181 | **732557** 475 414,5 | ALM |
| 1.6 i 16V 182BB1A | E | 1581 | 182A4.000 | A | + | TSW | 04/98 ▸ 09/98 | 46529669 | **732557** 475 414,5 | ALM |
| 1.6 i 16V 182BB1A | E | 1581 | 182A4.000 | A | - | TSW | 10/96 ▸ 04/98 | 7776507 | **734239** 475 414,5 | ALM |
| 1.6 i 16V 182BB1A | E | 1581 | 182A4.000 | A | - | TSW | 04/98 ▸ 09/98 | 46480388 | **732218** 480 414,5 | ALM |
| 1.6 i 16V 182BB11 | E | 1581 | 182A4.000 | A | - | TSW | 10/98 ▸ 03/02 | 46535003 | **732557** 475 414,5 | ALM |
| 1.6 i 16V 182BB11 | E | 1581 | 182A4.000 | A | - | EXP, TSW | 10/98 ▸ 03/02 | 46534995 | **732788** 480 414,5 | ALM |
| 1.6 i 16V 182/BB1A/BH1A ▸ 4540395 | E | 1581 | 182A4.000,182A6.000 | M | + | TSW | 06/95 ▸ 11/97 | 46420484 | **731981** 480 396 | ALM |
| 1.6 i 16V 182BB1A ▸ 4540395 | E | 1581 | 182A4.000 | A | + | TSW | 10/96 ▸ 11/97 | 46420484 | **731981** 480 396 | ALM |
| 1.6 i 16V 182BU1A | E | 1596 | 182B6.000 | M | + | TSW | 10/98 ▸ 03/02 | 71736182 | **732557** 475 414,5 | ALM |
| 1.6 i 16V 182BU1A | E | 1596 | 182B6.000 | M | - | EXP, TSW | 10/98 ▸ 03/02 | 46534995 | **732788** 480 414,5 | ALM |
| 1.8 i 16V 182BC1A | E | 1747 | 182A2.000 | M | + | TSW | 06/95 ▸ 03/02 | 46759742 | **731972** 375 563 | CBS |
| 1.8 i 16V 182BC1A | E | 1747 | 182A2.000 | M | - | TSW | 06/95 ▸ 03/02 | 46736953 | **731303** 510 414,5 | ALM |
| 1.8 i 16V 182BC1A | E | 1747 | 182A2.000 | M | - | TSW | 10/98 ▸ 03/02 | 46736955 | **731304** 460 414 | ALM |

# FIAT (.../...)

## BRAVA (.../...)

| Type Ctr. | | | CC | | AC | | | OE | Valeo | DIM. | TECH |
|---|---|---|---|---|---|---|---|---|---|---|---|
| 1.9 TD | 182/B11A/BF/BF1A BI1A | D | 1910 | 182A7.000,182A8.000 | M | + | TSW | 03/96 ▸ | 46405919 | **731974** | 375 563 | ALB |
| 1.9 TD | 182/B11A/BF/BF1A BI1A | D | 1910 | 182A7.000,182A8.000 | M | + | TSW | 03/96 ▸ 03/02 | 71736178 | **731974** | 375 563 | ALB |
| 1.9 TD | 182/B11A/BF/BF1A BI1A | D | 1910 | 182A7.000,182A8.000 | M | - | TSW | 03/96 ▸ 03/02 | 46518233 | **732787** | 554 414,5 | CBS |
| 1.9 JTD | 182/BR1A/BV1A | D | 1910 | 182B4.000,182B9.000 | M | - | TSW | 10/98 ▸ | 46547089 | **732623** | 554 414,5 | CBS |
| 1.9 JTD | 182/BR1A/BV1A | D | 1910 | 182B4.000,182B9.000 | M | - | TSW | 10/98 ▸ 03/02 | 71735371 | **732623** | 554 414,5 | CBS |
| 1.9 TD | 182B11A | D | 1910 | 182A8.000 | M | | TSW | 10/98 ▸ 03/02 | 46405919 | **731974** | 375 563 | ALB |
| 1.9 D | 182BE1B | D | 1929 | 160A7.000 | M | - | TSW | 06/95 ▸ 09/98 | 7767815 | **731306** | 508 414,5 | ALM |

## BRAVO (95>98)

| | | | | | | | | | | | |
|---|---|---|---|---|---|---|---|---|---|---|---|
| 1.4 i 12V | 182/AA1A/AGIA | E | 1372 | 182A3.000,182A5.000 | M | + | TSW | 11/97 ▸ 09/98 | 46525657 | **732557** | 475 414,5 | ALM |
| 4540396 ▸ | | | | | | | | | | | |
| 1.4 i 12V | 182/AA1A/AGIA | E | 1372 | 182A3.000,182A5.000 | M | + | TSW | 11/97 ▸ 09/98 | 71736181 | **732557** | 475 414,5 | ALM |
| 1.4 i 12V | 182/AA1A/AGIA | E | 1372 | 182A3.000,182A5.000 | M | - | TSW | 06/95 ▸ 09/98 | 7776507 | **734239** | 475 414,5 | ALM |
| 1.4 i 12V | 182/AA1A/AGIA | E | 1372 | 182A3.000,182A5.000 | M | + | TSW | 11/96 ▸ 11/97 | 46420484 | **731981** | 480 396 | ALM |
| 4300175 ▸ 4540395 | | | | | | | | | | | |
| 1.6 i 16V | 182/AB1A/ABIA/AHIA | E | 1581 | 182A4.000,182A6.000 | M | + | TSW | 11/97 ▸ 09/98 | 71736181 | **732557** | 475 414,5 | ALM |
| 1.6 i 16V | 182/AB1A/ABIA/AHIA | E | 1581 | 182A4.000,182A6.000 | M | + | TSW | 11/97 ▸ 09/98 | 46525657 | **732557** | 475 414,5 | ALM |
| 4540396 ▸ | | | | | | | | | | | |
| 1.6 i 16V | 182/AB1A/ABIA | E | 1581 | 182A4.000 | M | + | TSW | 04/98 ▸ 09/98 | 71736182 | **732557** | 475 414,5 | ALM |
| 1.6 i 16V | 182/AB1A/ABIA/AHIA | E | 1581 | 182A4.000,182A6.000 | M | + | TSW | 04/98 ▸ 09/98 | 46529669 | **732557** | 475 414,5 | ALM |
| 1.6 i 16V | 182/AB1A/ABIA/AHIA | E | 1581 | 182A4.000,182A6.000 | M | - | TSW | 06/95 ▸ 04/98 | 7776507 | **734239** | 475 414,5 | ALM |
| 1.6 i 16V | 182/AB1A/ABIA/AHIA | E | 1581 | 182A4.000,182A6.000 | M | - | TSW | 04/98 ▸ 09/98 | 46480388 | **732218** | 480 414,5 | ALM |
| 1.6 i 16V | 182AB11 | E | 1581 | 182A4.000 | A | + | TSW | 11/97 ▸ 04/98 | 71736181 | **732557** | 475 414,5 | ALM |
| 1.6 i 16V | 182AB11 | E | 1581 | 182A4.000 | A | + | TSW | 11/97 ▸ 04/98 | 46525657 | **732557** | 475 414,5 | ALM |
| 4540396 ▸ | | | | | | | | | | | |
| 1.6 i 16V | 182AB11 | E | 1581 | 182A4.000 | A | + | TSW | 04/98 ▸ 09/98 | 71736182 | **732557** | 475 414,5 | ALM |
| 1.6 i 16V | 182AB11 | E | 1581 | 182A4.000 | A | - | TSW | 10/96 ▸ 04/98 | 7776507 | **734239** | 475 414,5 | ALM |
| 1.6 i 16V | 182AB11 | E | 1581 | 182A4.000 | A | - | TSW | 04/98 ▸ 09/98 | 46480388 | **732218** | 480 414,5 | ALM |
| 1.6 i 16V | 182/AB1A/ABIA/AHIA | E | 1581 | 182A4.000,182A6.000 | M | + | TSW | 06/95 ▸ 11/97 | 46420484 | **731981** | 480 396 | ALM |
| ▸ 4540395 | | | | | | | | | | | |
| 1.6 i 16V | 182AB11 | E | 1581 | 182A4.000 | A | + | TSW | 10/96 ▸ 11/97 | 46420484 | **731981** | 480 396 | ALM |
| ▸ 4540395 | | | | | | | | | | | |
| 1.8 i 16V | 182/AC1A/AC1B | E | 1747 | 182A2.000 | M | + | TSW | 06/95 ▸ 09/98 | 46759742 | **731972** | 375 563 | CBS |
| 1.8 i 16V | 182/AC1A/AC1B | E | 1747 | 182A2.000 | M | - | TSW | 06/95 ▸ 09/98 | 46736953 | **731303** | 510 414,5 | ALM |
| 2.0 i 20V | 182AD1A | E | 1998 | 182A1.000 | M | - | TSW | 06/95 ▸ 09/98 | 7767440 | **731302** | 510 414,5 | ALM |
| 1.9 TD | 182AF1A | D | 1910 | 182A7.000 | M | +/- | TSW | 03/96 ▸ 09/98 | 46518233 | **732787** | 554 414,5 | CBS |
| 1.9 TD | 182AI1A | D | 1910 | 182A8.000 | M | +/- | TSW | 03/96 ▸ 09/98 | 71736178 | **731974** | 375 563 | ALB |
| 1.9 TD | 182AF1A | D | 1910 | 182A7.000 | M | + | TSW | 03/96 ▸ 09/98 | 46405919 | **731974** | 375 563 | ALB |
| 1.9 D | 182/AE1A/AE1B | D | 1929 | 160A7.000 | M | - | TSW | 06/95 ▸ 09/98 | 7767815 | **731306** | 508 414,5 | ALM |

## BRAVO (98>2006)

| | | | | | | | | | | | |
|---|---|---|---|---|---|---|---|---|---|---|---|
| 1.2 i 16V | 182/AP1A/AT1A | E | 1242 | 182B2.000,188A5.000 | M | + | TSW | 10/98 ▸ 03/02 | 71736183 | **732557** | 475 414,5 | ALM |
| 1.2 i 16V | 182/AP1A/AT1A | E | 1242 | 182B2.000,188A5.000 | M | + | TSW | 10/98 ▸ | 46537992 | **732557** | 475 414,5 | ALM |
| 1.2 i 16V | 182/AP1A/AT1A | E | 1242 | 182B2.000,188A5.000 | M | - | TSW | 10/98 ▸ 03/02 | 46480388 | **732218** | 480 414,5 | ALM |
| 1.6 i 16V | 182AB1A | E | 1581 | 182A4.000 | M | + | TSW | 10/98 ▸ 03/02 | 71736182 | **732557** | 475 414,5 | ALM |
| 1.6 i 16V | 182AB1A | E | 1581 | 182A4.000 | M | + | TSW | 10/98 ▸ | 46529669 | **732557** | 475 414,5 | ALM |
| 1.6 i 16V | 182AB1A | E | 1581 | 182A4.000 | M | - | EXP, TSW | 10/98 ▸ 03/02 | 46534995 | **732788** | 480 414,5 | ALM |
| 1.6 i 16V | 182AB11 | E | 1581 | 182A4.000 | A | - | TSW | 10/98 ▸ 03/02 | 46535003 | **732557** | 475 414,5 | ALM |
| 1.6 i 16V | 182AU1A | E | 1596 | 182B6.000 | M | + | TSW | 10/98 ▸ | 46529669 | **732557** | 475 414,5 | ALM |
| 1.6 i 16V | 182AU1A | E | 1596 | 182B6.000 | M | + | TSW | 10/98 ▸ 03/02 | 71736182 | **732557** | 475 414,5 | ALM |
| 1.6 i 16V | 182AU1A | E | 1596 | 182B6.000 | M | - | EXP, TSW | 10/98 ▸ 03/02 | 46534995 | **732788** | 480 414,5 | ALM |
| 1.8 i 16V | 182/AC1A/AC1B | E | 1747 | 182A2.000 | M | + | TSW | 10/98 ▸ 03/02 | 46759742 | **731972** | 375 563 | CBS |
| 1.8 i 16V | 182/AC1A/AC1B | E | 1747 | 182A2.000 | M | - | TSW | 10/98 ▸ 03/02 | 46736953 | **731303** | 510 414,5 | ALM |
| 2.0 i 20V | 182AQ1A | E | 1998 | 182B7.000 | M | + | TSW | 10/98 ▸ 03/02 | 46759742 | **731972** | 375 563 | CBS |
| 2.0 i 20V | 182AQ1A | E | 1998 | 182B7.000 | M | - | TSW | 10/98 ▸ 03/02 | 46736953 | **731303** | 510 414,5 | ALM |
| 1.9 JTD,1.9 TD | 182/AF1A/AI1A/AV1A | D | 1910 | 182A7.000,182A8.000,182B9.000 | M | + | TSW | 10/98 ▸ | 46405919 | **731974** | 375 563 | ALB |
| 1.9 JTD,1.9 TD | 182/AF1A/AI1A/AV1A | D | 1910 | 182A7.000,182A8.000,182B9.000 | M | + | TSW | 10/98 ▸ 03/02 | 71736178 | **731974** | 375 563 | ALB |
| 1.9 JTD,1.9 TD | 182/AF1A/AI1A/AV1A | D | 1910 | 182A7.000,182A8.000,182B9.000 | M | - | TSW | 10/98 ▸ 03/02 | 46518233 | **732787** | 554 414,5 | CBS |
| 1.9 JTD | 182/AR1A/AV1A | D | 1910 | 182B4.000,182B9.000 | M | - | TSW | 10/98 ▸ 03/02 | 71735371 | **732623** | 554 414,5 | CBS |
| 1.9 JTD | 182/AR1A/AV1A | D | 1910 | 182B4.000,182B9.000 | M | - | TSW | 10/98 ▸ | 46547089 | **732623** | 554 414,5 | CBS |
| 1.9 TD | 182AI1A | D | 1910 | 182A8.000 | M | | TSW | 10/98 ▸ 03/02 | 46405919 | **731974** | 375 563 | ALB |

## BRAVO II (2007>2009)

| | | | | | | | | | | | |
|---|---|---|---|---|---|---|---|---|---|---|---|
| 1.4 MPi 16V,1.4 Tjet 16V | 198/AX/AXA1/AXF1 | E | 1368 | 192B2.000,198A1.000,198A4.000 | M | + | | 02/07 ▸ | 55703927 | **735041** | 620 414,5 | ALB |
| 1.4 MPi 16V,1.4 Tjet 16V | 198/AX/AXA1/AXF1 | E | 1368 | 192B2.000,198A1.000,198A4.000 | M | | | 02/07 ▸ 12/09 | 55704135 | **735041** | 620 414,5 | ALB |
| 1.6 MJTD 105,1.6 MJTD 120 | 198/AXH1/AXL1 | D | 1598 | 198A2.000/F,198A3.000 | M | +/- | | 02/08 ▸ | 55703927 | **735041** | 620 414,5 | ALB |
| 1.6 MJTD 105,1.6 MJTD 120 | 198/AXH1/AXL1 | D | 1598 | 198A2.000/F,198A3.000 | M | | | 02/08 ▸ 12/09 | 51896964 | **735041** | 620 414,5 | ALB |

Radiator Radiateur Motorkühler Radiatore di raffreddamento Radiator Radyatör Radiador Радиатор vízhűtő Vodní chladič Radiator Ψυγείο



• **New** Nouveau **Nuevo** Novo **Nuovo** Nieuw **Neu** Nowość **Yeni** Новый Νέο **Novy**

# FIAT (.../...)

| Type Ctr. | | CC | | AC | | | OE | Valeo | DIM. | TECH |
|---|---|---|---|---|---|---|---|---|---|---|
| **BRAVO II (2007>2009) (.../...)** | | | | | | | | | | |
| 1.9,1.9 MJTD,1.9 MJTD 16V 198/AXB1/AXC1/AXD1 AXE1 | D | 1910 | 192A1.000,192A8.000,192B5.000 937A5.000 | M | + | | 02/07 ▸ | 55703927 | **735041** | 620 414,5 | ALB |
| 1.9 MJTD,1.9 MJTD 16V 198/AXB1/AXC1/AXD1 AXE1 | D | 1910 | 192A1.000,192A8.000,192B5.000 937A5.000 | M | | | 02/07 ▸ 12/09 | 51896964 | **735041** | 620 414,5 | ALB |
| **BRAVO (2010>)** | | | | | | | | | | |
| 1.4 MPi 16V 198/AXA1/AXF1/AXG1 AXS1<br>1.4 MPi GPL 16V<br>1.4 Tjet 16V<br>1.4 Turbo MultiAir 16V | E | 1368 | 192B2.000,198A1.000,198A4.000 198A7.000 | M | +/- | | 01/10 ▸ | 51896964 | **735041** | 620 414,5 | ALB |
| 1.6 MJTD 105 16V 198/AXH1/AXL1/AXM1<br>1.6 MJTD 120 16V<br>1.6 MJTD 90 16V | D | 1598 | 198A2.000,198A2.000/F;198A3.000 198A3.000/F;198A6.000,198A6.000/F | M | +/- | | 01/10 ▸ | 51896964 | **735041** | 620 414,5 | ALB |
| 1.9 MJTD 120,1.9 MJTD 150 198/AXB1/AXC1 | D | 1910 | 192A8.000,192A8.000/F;937A5.000 937A5.000/F | M | +/- | | 01/10 ▸ | 51896964 | **735041** | 620 414,5 | ALB |
| **CINQUECENTO** | | | | | | | | | | |
| 700,700 i 170/AA43/AD43 | E | 704 | 170A.000,170A.046 | M | - | TSW 819774 | 01/92 ▸ 02/98 | 46521746 | **730519** | 312 214 | ALM |
| 700,700 i 170/AA43/AD43 | E | 704 | 170A.000,170A.046 | M | - | | 01/92 ▸ 02/98 | 46521746 | | 312 214 | ALM |
| 700,700 i 170/AA43/AD43 | E | 704 | 170A.000,170A.046 | M | | TSW 819774 | 01/92 ▸ 02/98 | 46414206 | **730519** | 312 214 | ALM |
| 900,900 i 170/AF53/AG53/BF53 CF53/CF5C | E | 899 | 1170A1.000,1170A1.046 1170A1.046F | M | - | TSW | 01/92 ▸ 02/98 | 46783702 | **730520** | 467 248 | ALM |
| 900,900 i 170/AF53/AG53/BF53 CF53/CF5C | E | 899 | 1170A1.000,1170A1.046 1170A1.046F | M | - | TSW | 01/92 ▸ 02/98 | 46475456 | **730309** | 450 248 | ALM |
| 900,900 i 170/AB53/AC53 | E | 903 | 170A1.000,170A1.046 | M | - | TSW | 01/92 ▸ 02/98 | 46475456 | **730309** | 450 248 | ALM |
| 900,900 i 170/AB53/AC53 | E | 903 | 170A1.000,170A1.046 | M | - | TSW | 01/92 ▸ 02/98 | 46783702 | **730520** | 467 248 | ALM |
| 1.1 i 170AH53 | E | 1108 | 176B2.000 | M | - | TSW | 10/94 ▸ 02/98 | 46475456 | **730309** | 450 248 | ALM |
| 1.1 i 170AH53 | E | 1108 | 176B2.000 | M | - | TSW | 10/94 ▸ 02/98 | 46783702 | **730520** | 467 248 | ALM |
| 1.1 i 170AH53 | E | 1108 | 176B2.000 | M | | TSW | 10/94 ▸ 02/98 | 46405843 | **730309** | 450 248 | ALM |
| **COUPE** | | | | | | | | | | |
| 1.8 i 16V 175AXA1 | E | 1747 | 183A1.000 | M | + | TSW | 11/93 ▸ 09/00 | 71735370 | **731592** | 558 377,5 | ALM |
| 1.8 i 16V 175AXA1 | E | 1747 | 183A1.000 | M | + | TSW | 11/93 ▸ | 46421466 | **731592** | 558 377,5 | ALM |
| 1.8 i 16V 175AXA1 | E | 1747 | 183A1.000 | M | - | TSW | 11/93 ▸ 09/00 | 46551214 | **731592** | 558 377,5 | ALM |
| 2.0 i Turbo 16V FACB1AB | E | 1995 | 175A1.000 | M | + | TSW | 11/93 ▸ 09/96 | 82461146 | **730838** | 554 374,2 | ALB |
| 2.0 i 16V FAC/A1AA/A1BD | E | 1995 | 836A3.000,836A3.011 | M | + | | 11/93 ▸ 09/96 | 7699793 | | 554 374 | CBS |
| 2.0 i 16V FAC/A1AA/A1BD | E | 1995 | 836A3.000,836A3.011 | M | - | PIP+ TSW | 11/93 ▸ 09/96 | 7766965 | **811073** | 558 377,5 | ALM |
| 2.0 i Turbo 20V 175AXD1 | E | 1998 | 175A3.000 | M | +/- | TSW 820031 | 07/96 ▸ | 71735354 | **731593** | 554 375 | CBS |
| 2.0 i 20V 175/AXC1/AXE1 | E | 1998 | 182A1.000,182B3.000 | M | + | TSW | 07/96 ▸ 09/00 | 71735370 | **731592** | 558 377,5 | ALM |
| 2.0 i 20V 175/AXC1/AXE1 | E | 1998 | 182A1.000,182B3.000 | M | + | TSW | 07/96 ▸ | 46421466 | **731592** | 558 377,5 | ALM |
| 2.0 i 20V 175/AXC1/AXE1 | E | 1998 | 182A1.000,182B3.000 | M | - | TSW | 07/96 ▸ 09/00 | 46551214 | **731592** | 558 377,5 | ALM |
| 2.0 i Turbo 20V 175AXD1 | E | 1998 | 175A3.000 | M | | TSW 820031 | 10/98 ▸ 09/00 | 46467511 | **731593** | 554 375 | CBS |
| **CROMA** | | | | | | | | | | |
| 1600 154/AB55/AE55 | E | 1585 | 154A.048 | M | + | | 10/85 ▸ 12/90 | 82443104 | | 453 394 | CBS |
| 1.6 154LA55 | E | 1585 | 154A.000 | M | + | | 01/91 ▸ 12/92 | 82448235 | | 654 388 | ALB |
| 1.6 154LA55 | E | 1585 | 154A.000 | M | - | | 01/91 ▸ 12/92 | 82443108 | | 515 388 | ALB |
| 2.0 ie Turbo 155PF55 ; 154/LE55 LF55/ME55/NE55/NF55 | E | 1995 | 154C4.000,154C4.046 | M | +/- | | 01/91 ▸ 08/96 | 82479350 | | 453 388 | ALB |
| 2.0 CHT,2.0 ie,2000 ie 154/AC55/AD55/AM AQ55/AU55/LB55/LC55/NC55 | E | 1995 | 154A1.000,154C,154C3.000 154C5.000,834B.000 | M | + | | 10/85 ▸ 12/92 | 82443104 | | 453 394 | CBS |
| 2.0 ie,2.0 ie 16V 154/LC55/LD55/LM55 LN55/NC55 | E | 1995 | 154C3.000,154C3.046,154E1.000 834B.146 | M | + | | 01/91 ▸ 08/96 | 82443108 | | 515 388 | ALB |
| 2.0 ie,2.0 ie 16V 15AG55A ; 154/AG55<br>2.0 ie Turbo AM/DG55/LD55/LM55 LN55 | E | 1995 | 154A2.000,154A2.046,154C3.046 154E1.000,834B.146 | M | - | | > ▸ 08/96 | 82443104 | | 453 394 | CBS |
| 2.0 ie Turbo 15AG55A ; 154/AM DG55 | E | 1995 | 154A2.000,154A2.046 | M | - | | 05/86 ▸ 12/90 | 82449681 | | 453 388 | ALB |
| 2.0 CHT,2.0 ie 154/LB55/LC55/LM55 NC55 | E | 1995 | 154C3.000,154C5.000,834B.146 | M | - | | 01/91 ▸ 08/96 | 82462737 | | 453 394 | CBS |
| 2000 ie 154/AQ35/AQ45 | E | 1995 | 834B.000 | A | + | | 07/88 ▸ 12/90 | 82449235 | | 654 388 | ALB |
| 2.0 CHT,2.0 ie 154/LB45/LC45/LD45 LM45 | E | 1995 | 154C3.000,154C3.046,154C5.000 834B.146 | A | + | | 01/91 ▸ 08/96 | 82448235 | | 654 388 | ALB |
| 2.0 ie 154LD45 | E | 1995 | 154C3.046 | A | + | | 01/91 ▸ 12/92 | 82443108 | | 515 388 | ALB |
| 2000 ie 154/AD35/AQ35/AQ45 | E | 1995 | 834B.000 | A | - | | 10/85 ▸ 12/90 | 82443106 | | 453 388 | ALB |
| 2.0 CHT,2.0 ie,2000 ie 154/AQ35/AQ45/LB45 LC45/LM45 | E | 1995 | 154C3.000,154C5.000,834B.000 834B.146 | A | - | | 07/88 ▸ 08/96 | 82443108 | | 515 388 | ALB |
| 2.0 ie 154LC45 | E | 1995 | 154C3.000 | A | - | | 01/91 ▸ 12/92 | 82462737 | | 453 394 | CBS |
| 2.0 ie 154LD45 | E | 1995 | 154C3.046 | A | - | | 01/91 ▸ 12/92 | 82443104 | | 453 394 | CBS |

# FIAT (.../...)

## CROMA (.../...)

| | Type Ctr. | | CC | | | AC | | | OE | Valeo | DIM. | TECH |
|---|---|---|---|---|---|---|---|---|---|---|---|---|
| 2.0 ie Turbo ▸ 0108407 | 15AG55A ; 154/AG55 AM/DG55 | E | 1995 | 154A2.000,154A2.046 | M | - | | 10/85 ▸ | 82410257 | | 453 394 | CBS |
| 2.5 V6 | 154LP55 | E | 2492 | 834G.000 | M | +/- | | 06/93 ▸ 08/96 | 82462993 | | 654 388 | ALB |
| 2.0 TDiD ▸ 0299250 | 154/LG55/LR55 | D | 1929 | 154C6.000,154D1.000 | M | - | | > ▸ 12/96 | 82464875 | | 443 388,2 | ALB |
| 2.0 TDiD ▸ 0299249 | 154/AP55/LG55 | D | 1929 | 154B,154C6.000 | M | - | | 07/88 ▸ | 82443104 | | 453 394 | CBS |
| 2.0 TDiD ▸ 0299249 | 154LR55 | D | 1929 | 154D1.000 | M | | | 11/92 ▸ | 82443104 | | 453 394 | CBS |
| 2500 TD | 154AF55 | D | 2445 | 8144-91 | M | - | | > ▸ 06/88 | 82443116 | | 656 385 | CBS |
| 2500 TD | 154AF55 | D | 2445 | 8144-91 | M | - | | 05/86 ▸ | 82410255 | | 610 394 | ALB |
| 2.5 TD | 154/LH55/LI55/LL55 PL55 | D | 2500 | 8144-97,8144-97S,8144-97Y 8144-97Y7 | M | + | | 01/91 ▸ 08/96 | 82452773 | | 654 388,2 | ALB |
| 2500 D | 154AE55 | D | 2500 | 8144-67 | M | - | | 10/85 ▸ 06/88 | 82443114 | | 610 393,5 | ALB |
| 2500 TD | 154AR55 | D | 2500 | 8144-97 | M | - | | 07/88 ▸ 12/90 | 82410255 | | 610 394 | ALB |
| 2.5 TD,2500 TD | 154/AR55/LH55/LI55 LL55/PL55 | D | 2500 | 8144-97,8144-97S,8144-97Y 8144-97Y7 | M | - | | 07/88 ▸ 12/92 | 82449675 | | 654 388,2 | ALB |
| 2500 TD | 154AR55 | D | 2500 | 8144-97 | M | - | | 07/88 ▸ 12/90 | 82443116 | | 656 385 | CBS |
| 2.5 TD | 154/LI55/LL55/PL55 | D | 2500 | 8144-97S,8144-97Y,8144-97Y7 | M | - | | 12/92 ▸ 08/96 | 46414491 | | 654 388 | ALB |
| 2.5 TD | 154LH45 | D | 2500 | 8144-97 | A | + | | 01/91 ▸ 12/92 | 82452773 | | 654 388,2 | ALB |
| 2.5 TD | 154LH45 | D | 2500 | 8144-97 | A | - | | 01/91 ▸ 12/92 | 82449675 | | 654 388,2 | ALB |

## CROMA II (2005>2007)

| | | | | | | | | | | | | |
|---|---|---|---|---|---|---|---|---|---|---|---|---|
| 1.8 i 16V | 194AXG1 | E | 1796 | 939A4.000 | M | +/- | | 06/05 ▸ 10/07 | 51773281 | **734981** | 650 403 | ALM |
| 2.2 i 16V | 194AXA1 | E | 2198 | 194A1.000 | M | + | | 06/05 ▸ 10/07 | 51770410 | **732877** | 650 414,5 | ALB |
| 2.2 i 16V | 194AXA1 | E | 2198 | 194A1.000 | A | + | | 06/05 ▸ 10/07 | 51770411 | **732878** | 650 414,5 | ALB |
| 1.9 JTD 1.9 JTD Multijet 16V | 194/AXB1/BXB1 | D | 1910 | 939A1.000 | M | +/- | | 06/05 ▸ 10/07 | 51775637 | •**735085** | 649 414,5 | ALB |
| 1.9 JTD 1.9 JTD Multijet 16V | 194/AXB1/AXC1 | D | 1910 | 939A1.000,939A2.000 | M | + | | 06/05 ▸ | 51770416 | **734339** | 649 414,5 | ALB |
| 1.9 JTD Multijet 16V | 194AXC1 | D | 1910 | 939A2.000 | A | + | | 06/05 ▸ | 51770420 | **734345** | 649 414,5 | ALB |
| 2.4 JTD Multijet 20V | 194AXD1 | D | 2387 | 939A3.000/F | A | + | | 06/05 ▸ 10/07 | 51749911 | **734412** | 649 414,5 | ALB |

## CROMA II (2007>)

| | | | | | | | | | | | | |
|---|---|---|---|---|---|---|---|---|---|---|---|---|
| 1.8 MPi 16V | 194AXG1 | E | 1796 | 939A4.000 | M | +/- | | 10/07 ▸ 01/11 | 51773281 | **734981** | 650 403 | ALM |
| 2.4 JTD 20V | 194AXD1 | D | 2387 | 939A3.000/F | A | | | 10/07 ▸ 01/11 | 51749911 | **734412** | 649 414,5 | ALB |

## GRANDE PUNTO (2005>2008)

| | | | | | | | | | | | | |
|---|---|---|---|---|---|---|---|---|---|---|---|---|
| 1.2 i 8V | 199/AXA1/BXA1 | E | 1242 | 199A4.000 | M | +/- | | 10/05 ▸ 01/08 | 55700447 | **735042** | 540 377,5 | ALM |
| 1.4 MPi 16V,1.4 MPi 8V 1.4 i 8V | 199/AXB1/AXG1/BXB1 BXG1/DXB1 | E | 1368 | 199A6.000,350A1.000 | M | +/- | | 10/05 ▸ 01/08 | 55700447 | **735042** | 540 377,5 | ALM |
| 1.4 MPi,1.4 MPi 8V 1.4 i 8V | 199/AXB1/BXB1/DXB1 | E | 1368 | 199A7.000,350A1.000 | M | | | 10/05 ▸ 01/08 | 55700447 | **735042** | 540 377,5 | ALM |
| 1.4 MPi 16V | 199AXM1 | E | 1368 | 198A4.000 | M | | | 05/07 ▸ 01/08 | 51896964 | **735041** | 620 414,5 | ALB |
| 1.3 MJTD 16V | 199/AXD1/BXD1/DXC1 | D | 1248 | 199A3.000 | M | +/- | | 10/05 ▸ | 55700617 | **735041** | 620 414,5 | ALB |
| 1.3 MJTD 16V | 199/AXC1/BXC1/DXC1 | D | 1248 | 199A9.000 | M | +/- | | 10/05 ▸ 01/08 | 55700448 | **735040** | 620 395 | ALB |
| 1.3 MJTD 16V | 199/AXD1/BXD1/DXC1 | D | 1248 | 199A3.000 | M | | | 10/05 ▸ 01/08 | 55704135 | **735041** | 620 414,5 | ALB |
| 1.6 MJTD 16V | 199/AXS1/BXS1 | D | 1598 | 955A3.000/F | M | | | 01/09 ▸ | 55704135 | **735041** | 620 414,5 | ALB |
| 1.9 JTD | 199/AXE1/BXE1 | D | 1910 | 199A5.000,939A1.000 | M | | | 10/05 ▸ | 55700617 | **735041** | 620 414,5 | ALB |
| 1.9 JTD | 199/AXE1/BXE1 | D | 1910 | 199A5.000,939A1.000,939A7.000 | M | | | 10/05 ▸ 01/08 | 51896964 | **735041** | 620 414,5 | ALB |

## GRANDE PUNTO (2009>)

| | | | | | | | | | | | | |
|---|---|---|---|---|---|---|---|---|---|---|---|---|
| 1.4 MPI-GNV 70/77 8V 1.4 MPI-GNV 8V 1.4 MPI-GPL 77 8V 1.4 MPI-GPL 8V | 199/AXB1/BXB1/CXB1 DXB1 | F | 1368 | 350A1.000 GNV,350A1.000 GPL | M | | | 01/09 ▸ | 55700447 | **735042** | 540 377,5 | ALM |
| 1.2 i 65 8V,1.2 i 69 8V | 199/AX/AXA1/BX/BXA1 | E | 1242 | 169A4.000,199A4.000 | M | | | 01/09 ▸ | 55700447 | **735042** | 540 377,5 | ALM |
| 1.4 i 77 8V | 199/AXB1/BXB1/CXB1 DXB1 | E | 1368 | 350A1.000 | M | | | 01/09 ▸ | 55700447 | **735042** | 540 377,5 | ALM |

## GRANDE PUNTO (199) (2008>009)

| | | | | | | | | | | | | |
|---|---|---|---|---|---|---|---|---|---|---|---|---|
| 1.4 MPI-GNV 8V 1.4 MPI-GPL 8V | 199/AXB1/BXB1/CXB1 DXB1 | F | 1368 | 350A.1000 GNV,350A1.000 GPL | M | | | 10/08 ▸ 12/09 | 55700447 | **735042** | 540 377,5 | ALM |
| 1.2 i 65 8V | 199/AXA1/BXA1 | E | 1242 | 199A4.000 | M | | | 01/08 ▸ 12/09 | 55700447 | **735042** | 540 377,5 | ALM |
| 1.4 T-Jet 120 16V 1.4 i 95 16V | 199/AXG1/AXM1/BXG1 BXM1 | E | 1368 | 198A4.000,199A6.000 | M | | | 01/08 ▸ 12/09 | 51896964 | **735041** | 620 414,5 | ALB |
| 1.4 i 77 8V | 199/AXB1/BXB1/CXB1 DXB1 | E | 1368 | 350A1.000 | M | | | 01/08 ▸ 12/09 | 55700447 | **735042** | 540 377,5 | ALM |

Radiator Ψυγείο Vodní chladič Радиатор vízhűtő Radiador Radiator Radyatör Radiator Radiatore di raffreddamento Motorkühler Radiateur Radiator



• **New** Nouveau **Nuevo** Novo **Nuovo** Nieuw **Neu** Nowość **Yeni** Новый Νέο **Nový**

# FIAT (.../...)

## GRANDE PUNTO (199) (2008>009) (.../...)

| | Type Ctr. | | CC | | | AC | | | OE | Valeo | DIM. | TECH |
|---|---|---|---|---|---|---|---|---|---|---|---|---|
| 1.3 MJTD 16V<br>1.3 MJTD 90 16V<br>1.3 MJTD 95 16V | 199/AXD1/AXU1/BXD1<br>BXU1/CXD1/CXU1/DXD1<br>DXU1 | D | 1248 | 199A3.000,199A3.000/F,199B1.000 | M | | | 01/08 ▸ 12/09 | 51896964 | **735041** | 620 414,5 | ALB |
| 1.3 MJTD 75 16V | 199/AXC1/AXT1/BXC1<br>BXT1/CXC1/CXT1/DXC1/DXT1 | D | 1248 | 199A2.000,199A2.000/F,199A9.000 | M | | | 01/08 ▸ 12/09 | 55700448 | **735040** | 620 395 | ALB |
| 1.6 MJTD 120 16V | 199/AXS1/BXS1 | D | 1598 | 955A3.000 | M | | | 01/08 ▸ 12/09 | 51896964 | **735041** | 620 414,5 | ALB |
| 1.9 MJTD 130 16V | 199/AXF1/BXF1 | D | 1910 | 199A5.000 | M | +/- | | 01/08 ▸ 12/09 | 51896964 | **735041** | 620 414,5 | ALB |
| 1.9 MJTD 120 16V | 199/AXE1/BXE1 | D | 1910 | 939A1.000,939A1.000/F | M | | | 01/08 ▸ 12/09 | 51896964 | **735041** | 620 414,5 | ALB |

## IDEA (2003>2007)

| | | | | | | | | | | | | |
|---|---|---|---|---|---|---|---|---|---|---|---|---|
| 1.2 i 16V | 350AXD1 | E | 1242 | 188A5.000 | M | +/- | | 02/04 ▸ 06/07 | 51706057 | **734363** | 580 316 | ALM |
| 1.2 i 16V | 350AXD1 | E | 1242 | 188A5.000 | M | | | 02/04 ▸ 06/07 | 51706057 | **734363** | 580 316 | ALM |
| 1.4 i 16V | 350AXE1 | E | 1368 | 192B2.000 | M | +/- | | 10/03 ▸ 06/07 | 51706942 | **734362** | 580 305 | ALB |
| 1.4 i,1.4 i 16V | 350/AXA1/AXF1 | E | 1368 | 350A1.000,843A1.000 | M | | | 10/03 ▸ 06/07 | 51706942 | **734362** | 580 305 | ALB |
| 1.3 JTD Multijet 16V | 350AXB1 | D | 1248 | 188A9.000 | M | +/- | | 04/05 ▸ 06/07 | 46834067 | **734364** | 580 305 | ALB |
| 1.3 JTD Multijet 16V | 350AXB1 | D | 1248 | 188A9.000 | M | | | 10/03 ▸ 04/05 | 51708005 | **734361** | 580 305 | ALB |
| 1.3 JTD Multijet 16V | 350/AXB1/AXG1 | D | 1248 | 188A9.000,199A3.000 | M | | | 10/03 ▸ 06/07 | 46834067 | **734364** | 580 305 | ALB |
| 1.9 JTD | 350AXC1 | D | 1910 | 188B2.000 | M | +/- | | 02/04 ▸ 06/07 | 51708727 | **732913** | 580 322 | ALM |

## IDEA (2007>)

| | | | | | | | | | | | | |
|---|---|---|---|---|---|---|---|---|---|---|---|---|
| 1.4 i GPL 8V | 350AXF1 | F | 1368 | 350A1.000 GPL | M | | | 01/08 ▸ | 51706942 | **734362** | 580 305 | ALB |
| 1.2 i 16V | 350AXD1 | E | 1242 | 188A5.000 | M | | | 06/07 ▸ | 51706057 | **734363** | 580 316 | ALM |
| 1.4 i 16V,1.4 i 8V | 350/AXA1/AXE1/AXF1<br>BXA1 | E | 1368 | 192B2.000,350A1.000,843A1.000 | M | | | 06/07 ▸ | 51706942 | **734362** | 580 305 | ALB |
| 1.3 MJTD,1.3 MJTD 16V | 350/AXB1/AXG1/BXB1<br>BXG1 | D | 1248 | 188A9.000,199A3.000 | M | | | 06/07 ▸ | 46834067 | **734364** | 580 305 | ALB |
| 1.9 JTD | 350/AXE1/BXE1 | D | 1910 | 188B2.000 | M | | | 06/07 ▸ | 51708727 | **732913** | 580 322 | ALM |

## MAREA

| | | | | | | | | | | | | |
|---|---|---|---|---|---|---|---|---|---|---|---|---|
| 1.2 i 16V | 185/AXP1/BXP1 | E | 1242 | 182B2.000 | M | + | TSW | 02/99 ▸ | 46537992 | **732557** | 475 414,5 | ALM |
| 1.2 i 16V | 185/AXP1/BXP1 | E | 1242 | 182B2.000 | M | + | TSW | 02/99 ▸ 09/02 | 71736183 | **732557** | 475 414,5 | ALM |
| 1.2 i 16V | 185/AXP1/BXP1 | E | 1242 | 182B2.000 | M | - | TSW | 02/99 ▸ 09/02 | 46480388 | **732218** | 480 414,5 | ALM |
| 1.4 i 12V | 185AXA | E | 1372 | 182A3.000 | M | + | TSW | 10/97 ▸ 01/99 | 71736181 | **732557** | 475 414,5 | ALM |
| 1.4 i 12V | 185/AXA/BXA | E | 1372 | 182A3.000 | M | - | TSW | 07/96 ▸ 01/99 | 7776507 | **734239** | 475 414,5 | ALM |
| 1.6 i 16V<br>1.6 i Bipower 16V | 185/AXB/AXH1/BXB | E | 1581 | 182A4.000,185A3.000 | M | + | TSW | 07/96 ▸ 11/99 | 71736181 | **732557** | 475 414,5 | ALM |
| 1.6 i 16V<br>1.6 i Bipower 16V | 185/AXB/AXH/BXB | E | 1581 | 182A4.000,185A3.000 | M | + | TSW | 07/96 ▸ 01/99 | 46420484 | **731981** | 480 396 | ALM |
| 1.6 i 16V<br>1.6 i Bipower 16V | 185/AXB/AXB1/AXH1<br>BXB/BXB1 | E | 1581 | 182A4.000,185A3.000 | M | + | TSW | 10/98 ▸ 05/00 | 71736182 | **732557** | 475 414,5 | ALM |
| 1.6 i Bipower 16V | 185AXH1 | E | 1581 | 185A3.000 | M | + | TSW | 02/99 ▸ 05/00 | 46514942 | **732557** | 475 414,5 | ALM |
| 1.6 i 16V<br>1.6 i Bipower 16V | 185/AXB1/AXH1/BXB1 | E | 1581 | 182A4.000,185A3.000 | M | + | TSW | 03/00 ▸ 09/02 | 46754746 | **732557** | 475 414,5 | ALM |
| 1.6 i 16V<br>1.6 i Bipower 16V | 185/AXB/AXH/AXH1/BXB | E | 1581 | 182A4.000,185A3.000 | M | - | TSW | 07/96 ▸ 11/99 | 7776507 | **734239** | 475 414,5 | ALM |
| 1.6 i 16V<br>1.6 i Bipower 16V | 185/AXB/AXB1/AXH1<br>BXB/BXB1 | E | 1581 | 182A4.000,185A3.000 | M | - | EXP, TSW | 10/98 ▸ 09/02 | 46534995 | **732788** | 480 414,5 | ALM |
| 1.6 i Bipower 16V | 185AXH1 | E | 1581 | 185A3.000 | M | - | TSW | 02/99 ▸ 11/99 | 46420484 | **731981** | 480 396 | ALM |
| 1.6 i 16V | 185AXL1 | E | 1581 | 182B5.098 | M | | TSW | 02/99 ▸ 05/00 | 46529669 | **732557** | 475 414,5 | ALM |
| 1.6 i 16V | 185/AXB/BXB | E | 1581 | 182A4.000 | A | + | TSW | 09/96 ▸ 01/99 | 46420484 | **731981** | 480 396 | ALM |
| 1.6 i 16V | 185/AXB/BXB | E | 1581 | 182A4.000 | A | - | TSW | 09/96 ▸ 01/99 | 7776507 | **734239** | 475 414,5 | ALM |
| 1.6 i 16V | 185/AXB/BXB | E | 1581 | 182A4.000 | A | - | EXP, TSW | 10/98 ▸ 01/99 | 46534995 | **732788** | 480 414,5 | ALM |
| 1.6 i 16V | 185/AXB1/BXB1 | E | 1581 | 182A4.000 | A | - | TSW | 02/99 ▸ 09/02 | 46535003 | **732557** | 475 414,5 | ALM |
| 1.6 i 16V | 185/AXR1/BXR1 | E | 1596 | 182B6.000 | M | +/- | TSW | 02/99 ▸ 05/00 | 46529669 | **732557** | 475 414,5 | ALM |
| 1.6 i 16V | 185/AXR1/BXR1 | E | 1596 | 182B6.000 | M | +/- | TSW | 05/00 ▸ 09/02 | 46754746 | **732557** | 475 414,5 | ALM |
| 1.6 i 16V | 185/AXR1/BXR1 | E | 1596 | 182B6.000 | M | - | EXP, TSW | 02/99 ▸ 09/02 | 46534995 | **732788** | 480 414,5 | ALM |
| 1.6 i 16V | 185/AXR1/BXR1 | E | 1596 | 182B6.000 | A | - | TSW | 02/99 ▸ 09/02 | 46535003 | **732557** | 475 414,5 | ALM |
| 1.6 i 16V | 185/AXR1/BXR1 | E | 1596 | 182B6.000 | A | - | EXP, TSW | 02/99 ▸ 09/02 | 46534995 | **732788** | 480 414,5 | ALM |
| 1.8 i 16V | 185/AXC/AXC1/BXC<br>BXC1 | E | 1747 | 182A2.000 | M | + | TSW | 07/96 ▸ 09/02 | 46759742 | **731972** | 375 563 | CBS |
| 1.8 i 16V | 185/AXC/AXC1/BXC<br>BXC1 | E | 1747 | 182A2.000 | M | - | TSW | 07/96 ▸ 09/02 | 46736953 | **731303** | 510 414,5 | ALM |
| 2.0 i 20V | 185/AXM1/AXS1/BXM1<br>BXS1 | E | 1998 | 182B7.000,185A8.000 | M | + | TSW | 02/99 ▸ 09/02 | 46759742 | **731972** | 375 563 | CBS |
| 2.0 i 20V | 185/AXD/BXD | E | 1998 | 182A1.000 | M | - | TSW | 07/96 ▸ 01/99 | 7767440 | **731302** | 510 414,5 | ALM |
| 2.0 i 20V | 185/AXM1/AXS1/BXM1<br>BXS1 | E | 1998 | 182B7.000,185A8.000 | M | - | TSW | 02/99 ▸ 09/02 | 46736953 | **731303** | 510 414,5 | ALM |
| 1.9 JTD | 185BXN1 | D | 1910 | 182B4.000 | M | +/- | TSW | 06/00 ▸ | 46547089 | **732623** | 554 414,5 | CBS |
| 1.9 TD | 185/AXE/AXF/BXE/BXF | D | 1910 | 182A7.000,182A8.000 | M | + | TSW | 07/96 ▸ 01/99 | 46405919 | **731974** | 375 563 | ALB |

# FIAT (.../...)

## MAREA (.../...)

| | | | CC | | | AC | | | OE | Valeo | DIM. | TECH |
|---|---|---|---|---|---|---|---|---|---|---|---|---|
| 1.9 JTD 0309450 ▸ | 185AXN1 | D | 1910 | 182B4.000 | M | - | TSW | > ▸ | 46547089 | **732623** | 554 414,5 | CBS |
| 1.9 TD | 185/AXE/AXF/AXF1/BXE BXF/BXF1 | D | 1910 | 182A7.000,182A8.000 | M | - | TSW | 07/96 ▸ 09/02 | 46518233 | **732787** | 554 414,5 | CBS |
| 1.9 JTD | 185/AXN1/BXN1 | D | 1910 | 182B4.000 | M | - | TSW | 02/99 ▸ 09/02 | 46547898 | **732623** | 554 414,5 | CBS |
| 1.9 JTD | 185/AXN1/BXN1 | D | 1910 | 182B4.000 | M | - | TSW | 07/03 ▸ | 71735371 | **732623** | 554 414,5 | CBS |
| 2.4 TD | 185/AXG/BXG | D | 2387 | 185A2.000 | M | +/- | | 07/96 ▸ 01/99 | 46525661 | | 560 440 | ALB |
| 2.4 JTD | 185/AXQ1/BXQ1 | D | 2387 | 185A6.000 | M | +/- | | 02/99 ▸ 09/02 | 46551461 | | 558 438 | ALB |
| 2.4 TD | 185/AXG/BXG | D | 2387 | 185A2.000 | M | - | | 07/96 ▸ 01/99 | 46480690 | | 560 440 | ALB |

## MARENGO (159) (89>93)

| | | | | | | | | | | | | |
|---|---|---|---|---|---|---|---|---|---|---|---|---|
| 1.9 Tds | 159AI | D | 1929 | 160A6.000 | M | +/- | TSW | 11/89 ▸ 02/93 | 7610803 | **810949** | 554 374,2 | ALM |
| 1.9 D | 159AG | D | 1929 | 160A7.000 | M | + | TSW | 11/89 ▸ 02/93 | 7610803 | **810949** | 554 374,2 | ALM |
| 1.9 D | 159AG | D | 1929 | 160A7.000 | M | - | PIP+ TSW | 11/89 ▸ 02/93 | 7611159 | **811073** | 558 377,5 | ALM |

## MARENGO (159) (93>95)

| | | | | | | | | | | | | |
|---|---|---|---|---|---|---|---|---|---|---|---|---|
| 1.9 TD | 159BI | D | 1929 | 160A6.000 | M | + | TSW | 03/93 ▸ 01/95 | 7727204 | **810949** | 554 374,2 | ALM |
| 1.9 D | 159AG | D | 1929 | 160A7.000 | M | + | TSW | 03/93 ▸ 01/95 | 7610803 | **810949** | 554 374,2 | ALM |
| 1.9 TD | 159BI | D | 1929 | 160A6.000 | M | - | TSW | 03/93 ▸ 03/94 | 7610803 | **810949** | 554 374,2 | ALM |
| 1.9 TD | 159BI | D | 1929 | 160A6.000 | M | - | | 03/93 ▸ 01/95 | 46404422 | | 554 367 | CBS |
| 1.9 D,1.9 TD | 159/AG/BI | D | 1929 | 160A6.000,160A7.000 | M | - | PIP+ TSW | 03/93 ▸ 01/95 | 7611159 | **811073** | 558 377,5 | ALM |

## MARENGO (185) (95>)

| | | | | | | | | | | | | |
|---|---|---|---|---|---|---|---|---|---|---|---|---|
| 1.9 JTD,1.9 TD | 185/CXE/CXN1 | D | 1910 | 182A7.000,182B4.000 | M | + | TSW | 05/98 ▸ 09/02 | 71736178 | **731974** | 375 563 | ALB |
| 1.9 JTD,1.9 TD | 185/CXE/CXN1 | D | 1910 | 182A7.000,182B4.000 | M | + | TSW | 05/98 ▸ | 46405919 | **731974** | 375 563 | ALB |
| 1.9 JTD,1.9 TD | 185/CXE/CXF/CXF1 CXN1 | D | 1910 | 182A7.000,182A8.000,182B4.000 | M | - | TSW | 01/95 ▸ 09/02 | 46518233 | **732787** | 554 414,5 | CBS |
| 1.9 JTD 309450 ▸ | 185CXN1 | D | 1910 | 182B4.000 | M | | TSW | 01/99 ▸ 09/02 | 46547089 | **732623** | 554 414,5 | CBS |
| 1.9 JTD | 185CXN1 | D | 1910 | 182B4.000 | M | | TSW | 01/99 ▸ | 46547898 | **732623** | 554 414,5 | CBS |

## MULTIPLA (98>2003)

| | | | | | | | | | | | | |
|---|---|---|---|---|---|---|---|---|---|---|---|---|
| 1.6 i 16V<br>1.6 i Bipower 16V<br>1.6 i Blupower 16V | 186/AMA1/AMB1/AXA1 | E | 1581 | 182A4.000,186A3.000,186A4.000 | M | + | TSW | 11/98 ▸ 06/04 | 71736182 | **732557** | 475 414,5 | ALM |
| 1.6 i 16V<br>1.6 i Bipower 16V<br>1.6 i Blupower 16V | 186/AMA1/AMB1/AXA1 | E | 1581 | 182A4.000,186A3.000,186A4.000 | M | + | TSW | 11/98 ▸ | 46529669 | **732557** | 475 414,5 | ALM |
| 1.6 i 16V<br>1.6 i Bipower 16V<br>1.6 i Blupower 16V | 186/AMA1/AMB1/AXA1 | E | 1581 | 182A4.000,186A3.000,186A4.000 | M | + | TSW | 11/98 ▸ 04/04 | 46754746 | **732557** | 475 414,5 | ALM |
| 1.6 i 16V<br>1.6 i Bipower 16V<br>1.6 i Blupower 16V | 186/AMA1/AMB1/AXA1 | E | 1581 | 182A4.000,186A3.000,186A4.000 | M | - | | 11/98 ▸ 06/04 | 46737569 | **732503** | 480 414 | ALM |
| 1.6 i 16V<br>1.6 i Bipower 16V | 186/AGB1/AXC1 | E | 1596 | 182B6.000 | M | + | TSW | 11/98 ▸ 06/04 | 71736182 | **732557** | 475 414,5 | ALM |
| 1.6 i Bipower 16V | 186AXC1 | E | 1596 | 182B6.000 | M | + | TSW | 08/00 ▸ | 46529669 | **732557** | 475 414,5 | ALM |
| 1.6 i Bipower 16V | 186AXC1 | E | 1596 | 182B6.000 | M | + | TSW | 08/00 ▸ 06/03 | 46754746 | **732557** | 475 414,5 | ALM |
| 1.6 i 16V<br>1.6 i Bipower 16V | 186/AGB1/AXC1 | E | 1596 | 182B6.000 | M | - | | 11/98 ▸ 06/04 | 46737569 | **732503** | 480 414 | ALM |
| 1.9 JTD | 186/AXB1/AXD1/AXE1 | D | 1910 | 182B4.000,186A6.000,186A8.000 | M | + | TSW | 11/98 ▸ 06/04 | 46759742 | **731972** | 375 563 | CBS |
| 1.9 JTD | 186/AXB1/AXD1/AXE1 | D | 1910 | 182B4.000,186A6.000,186A8.000 | M | - | | 11/98 ▸ 06/04 | 46514419 | | 555 394 | CBS |

## MULTIPLA (2004>)

| | | | | | | | | | | | | |
|---|---|---|---|---|---|---|---|---|---|---|---|---|
| 1.6 i 16V<br>1.6 i Bi Power 16V<br>1.6 i Bi Power GPL 16V | 186/AGB1/AXC1 | E | 1596 | 182B6.000 | M | - | | 07/04 ▸ 05/10 | 46737569 | **732503** | 480 414 | ALM |
| 1.9 JTD | 186/AXE1/AXG1 | D | 1910 | 186A8.000,186A9.000 | M | + | TSW | 07/04 ▸ 05/10 | 46759742 | **731972** | 375 563 | CBS |
| 1.9 JTD | 186/AXE1/AXG1 | D | 1910 | 186A8.000,186A9.000 | M | - | | 07/04 ▸ 05/10 | 46514419 | | 555 394 | CBS |

## PALIO (97>2001)

| | | | | | | | | | | | | |
|---|---|---|---|---|---|---|---|---|---|---|---|---|
| 1.1 | 178BXM1 | E | 1108 | 178B9.033 | M | +/- | | 09/98 ▸ 02/01 | 46449096 | **732004** | 430 359 | ALM |
| 1.2 i | 178/DXG1/DYA1 | E | 1242 | 178B5.000,188A4.000 | M | + | TSW | 09/97 ▸ 02/01 | 46417059 | **732005** | 522 359 | ALM |
| 1.2 i | 178DYA1 | E | 1242 | 188A4.000 | M | + | | 09/97 ▸ 02/01 | 46778884 | | | |
| 1.2 i | 178/AXU1/BXU1/DYA1 | E | 1242 | 178B7.045,188A4.000 | M | + | TSW | 04/99 ▸ 02/01 | 46750718 | **732005** | 522 359 | ALM |
| 1.2 i | 178DXG1 | E | 1242 | 178B5.000 | M | - | TSW | 09/97 ▸ 02/01 | 46449104 | **732006** | 522 359 | ALM |
| 1.2 i | 178/AXU1/BXU1/DXG1/DYA1 | E | 1242 | 178B5.000,178B7.045,188A4.000 | M | - | TSW | 09/97 ▸ 02/01 | 46750717 | **732812** | 520 359 | ALM |
| 1.2 i | 178DXG1 | E | 1242 | 178B5.000 | M | - | TSW | 10/99 ▸ 02/01 | 46750718 | **732005** | 522 359 | ALM |

Radiator Radiateur Motorkühler Radiatore di raffreddamento Radiator Radyatör Radiador Радиатор vízhűtő Vodní chladič Radiator Ψυγείο



• **New** Nouveau **Nuevo** Novo **Nuovo** Nieuw **Neu** Nowość **Yeni** Новый Νέο **Nový**

## PALIO (97>2001) (.../...)

| | | | CC | | | AC | | | OE | Valeo | DIM. | TECH |
|---|---|---|---|---|---|---|---|---|---|---|---|---|
| 1.2 i | 178BYA1 | E | 1242 | 188A4.000 | M | | TSW | 03/01 ▸ 09/02 | 46819261 | 732948 | 522 377,5 | ALM |
| 1.2 i,1.2 i 16V | 178/BYA1/BYE1/DYA DYA1/DYE/DYE1 | E | 1242 | 178D7055,188A4.000,188A5.000 | M | | TSW | 03/01 ▸ 09/02 | 46833511 | 732948 | 522 377,5 | ALM |
| 1.4 i | 178/BXC1/BXP1 | E | 1372 | 178B2.000,178B2.016 | M | + | TSW | 06/99 ▸ 02/01 | 46750718 | 732005 | 522 359 | ALM |
| 1.4 i | 178/BXC1/BXP1 | E | 1372 | 178B2.000,178B2.016 | M | - | TSW | 06/99 ▸ 02/01 | 46750717 | 732812 | 520 359 | ALM |
| 1.6 i | 178/AXV1/DXV1 | E | 1580 | 178D2.011 | M | + | | 06/99 ▸ 02/01 | 46552135 | | 520 340 | ALB |
| 1.6 i | 178DXV1 | E | 1580 | 178D2.011 | M | - | | 06/99 ▸ 02/01 | 46552130 | | 522 359 | ALM |
| 1.6 i | 178/AXV1/DXV1 | E | 1580 | 178D2.011 | M | - | | 06/99 ▸ 02/01 | 46778884 | | | |
| 1.6 i 16V | 178/BXD1/DXD1 | E | 1581 | 178B3.000 | M | + | TSW | 09/97 ▸ 02/01 | 46417050 | 732007 | 521 340 | ALB |
| 1.6 i,1.6 i 16V | 178/BXD1/DXD1/DXQ1 | E | 1581 | 178B3.000,178C7.098 | M | + | | 06/99 ▸ 02/01 | 46552135 | | 520 340 | ALB |
| 1.6 i 16V | 178DXD1 | E | 1581 | 178B3.000 | M | - | TSW | 09/97 ▸ 02/01 | 46417059 | 732005 | 522 359 | ALM |
| 1.6 i 16V | 178/BXD1/DXD1 | E | 1581 | 178B3.000 | M | - | TSW | 09/97 ▸ 10/99 | 46750718 | 732005 | 522 359 | ALM |
| 1.6 i | 178DXQ1 | E | 1581 | 178C7.098 | M | - | | 06/99 ▸ 02/01 | 46778884 | | | |
| 1.6 i 16V | 178/BXD1/DXD1 | E | 1581 | 178B3.000 | M | - | | 10/99 ▸ 02/01 | 46552130 | | 522 359 | ALM |
| 1.6 i 16V | 178DYC1 | E | 1596 | 182B6.000 | M | + | | 09/97 ▸ 02/01 | 46552135 | | 520 340 | ALB |
| 1.6 i 16V | 178DYC1 | E | 1596 | 182B6.000 | M | - | | 09/97 ▸ 02/01 | 46778884 | | | |
| 1.7 D,1.7 TD | 178/BXN1/DXB1/DXH1 | D | 1697 | 176A3.000,176B3.000,176B7.000 | M | +/- | TSW | 09/97 ▸ 02/01 | 46440541 | 732147 | 520 367,9 | ALB |
| 1.7 TD | 178/DXB1/DXH1 | D | 1697 | 176A3.000,176B7.000 | M | +/- | TSW | 09/97 ▸ 02/01 | 46750717 | 732812 | 520 359 | ALM |
| 1.7 TD | 178/DXB1/DXH1 | D | 1697 | 176A3.000,176B7.000 | M | +/- | TSW | 09/97 ▸ 02/01 | 46453389 | 732147 | 520 367,9 | ALB |
| 1.7 TD | 178/DXT1/DXB1 | D | 1697 | 176B7.000,178C9.066 | M | | TSW | 09/97 ▸ 12/01 | 46440541 | 732147 | 520 367,9 | ALB |

## PANDA

| | | | CC | | | AC | | | OE | Valeo | DIM. | TECH |
|---|---|---|---|---|---|---|---|---|---|---|---|---|
| 0.6 | 141A | E | 652 | 126B.B1C0 | M | - | TSW | 07/80 ▸ 02/86 | 7585721 | 883053 | 310 359 | ALM |
| 750 | 11A/14AC/A4AC/A4CT ; 141/AA43/AA4C/AA53/AI43 AI53/AM43/AM53 | E | 769 | 141B.000,156A4.000,156A4.048 | M | - | EXP, TSW | 03/86 ▸ 12/92 | 7711521 | 816707 | 519 248 | ALM |
| 0.8 | 141/A2N/A2NC | E | 843 | 100GL6.000 | M | - | TSW | 01/82 ▸ 02/86 | 7585721 | 883053 | 310 359 | ALM |
| 900 ie | 141/AT53/GT53/GT5F | E | 899 | 1170A1.046,1170A1.046F | M | - | EXP, TSW | 10/89 ▸ 08/03 | 7711521 | 816707 | 519 248 | ALM |
| 0.9 | 141/A1I/A3/A35/A35C/A3I/A3I5/A3IC | E | 903 | 100GL3.000 | M | - | TSW | 07/80 ▸ 02/86 | 7585721 | 883053 | 310 359 | ALM |
| 900 | 141/AL43/AL53 | E | 903 | 146A.048 | M | - | EXP, TSW | 06/89 ▸ 03/92 | 7711521 | 816707 | 519 248 | ALM |
| 1.0 | 141/A4/A4C | E | 965 | A112B1.054 | M | - | TSW | 06/83 ▸ 02/86 | 5979815 | 811392 | 580 248 | ALM |
| 1.0 | 141/A4/A4C | E | 965 | A112B1.054 | M | - | | 06/83 ▸ 02/86 | 5979815 | | 580 248 | ALM |
| 1000,1000 ie | 11A/E5B8 ; 151AE53 141/AE53/AE5B/AO43/AO53 | E | 999 | 156A2.000,156A2.246,156A3.000 | M | - | TSW | 03/86 ▸ 08/03 | 46551216 | 811392 | 580 248 | ALM |
| 1000,1000 ie | 11A/B5AC/B5CT/B8AC B8CT ; 141/AB43/AB53/AB83/AF43/AF53/AJ53 AO43/AO53 | E | 999 | 141C2.000,156A2.000,156A2.100 156A2.246 | M | - | EXP, TSW | 03/86 ▸ 08/03 | 7711521 | 816707 | 519 248 | ALM |
| 1000 | 141AB13 | E | 999 | 156A2.000 | A | - | EXP, TSW | 1990 ▸ 12/92 | 7711521 | 816707 | 519 248 | ALM |
| 1100 ie | 141AW53 | E | 1108 | 187A1.000 | M | +/- | TSW 819774 | 12/00 ▸ 08/03 | 46777410 | 732792 | 580 248 | ALM |
| 1100 ie | 141/AK53/AS53/MK53 | E | 1108 | 156C.046,176B2.000 | M | - | TSW | 06/89 ▸ 08/03 | 46551216 | 811392 | 580 248 | ALM |
| 1100 ie | 141AS53 | E | 1108 | 156C.046 | M | - | EXP, TSW | 06/89 ▸ 02/91 | 7711521 | 816707 | 519 248 | ALM |
| 1100 ie | 141AK53 | E | 1108 | 176B2.000 | M | - | EXP, TSW | 07/92 ▸ 08/03 | 71735368 | 816707 | 519 248 | ALM |
| 1100 ie | 141AK53 | E | 1108 | 176B2.000 | M | - | EXP, TSW | 07/92 ▸ | 7730497 | 816707 | 519 248 | ALM |
| 1100 ie | 141AK53 | E | 1108 | 176B2.000 | M | | EXP, TSW | 07/92 ▸ 08/03 | 7730497 | 816707 | 519 248 | ALM |
| 1100 ie | 141AS13 | E | 1108 | 156C.046 | A | - | EXP, TSW | 10/90 ▸ 02/91 | 7711521 | 816707 | 519 248 | ALM |
| 1100 ie | 141AS13 | E | 1108 | 156C.046 | A | - | TSW | 04/91 ▸ 08/03 | 46551216 | 811392 | 580 248 | ALM |
| 1100 ie | 141AK13 | E | 1108 | 176B2.000 | A | - | EXP, TSW | 07/92 ▸ 08/03 | 71735368 | 816707 | 519 248 | ALM |
| 1100 ie | 141AK13 | E | 1108 | 176B2.000 | A | - | EXP, TSW | 07/92 ▸ | 7730497 | 816707 | 519 248 | ALM |
| 1100 ie | 141AK13 | E | 1108 | 176B2.000 | A | | EXP, TSW | 07/92 ▸ 08/03 | 7730497 | 816707 | 519 248 | ALM |
| 1300 D | 141/AD43/AD53/AD5C | D | 1301 | 156A5.000 | M | - | | 04/86 ▸ 02/91 | 7572273 | | 590 267 | ALB |

## PANDA (2003>2009)

| | | | CC | | | AC | | | OE | Valeo | DIM. | TECH |
|---|---|---|---|---|---|---|---|---|---|---|---|---|
| 1.2 i GNV | 169AXB1 | F | 1242 | 188A4.000 | M | + | | 06/07 ▸ | 51779915 | 735175 | | |
| 1.2 i GNV | 169AXB1 | F | 1242 | 188A4.000 | M | + | | 06/07 ▸ 09/09 | 51773192 | 734924 | 581 317 | ALM |
| 1.2 i GNV | 169AXB1 | F | 1242 | 188A4.000 | M | - | | 06/07 ▸ | 51773189 | 734923 | 501 317 | ALM |
| 1.1 i,1.1 i Eco | 169/AXA1/CXA1 | E | 1108 | 187A1.000 | M | + | | 09/03 ▸ 09/09 | 51773192 | 734924 | 581 317 | ALM |
| 1.1 i | 169/AXA1/CXA1 | E | 1108 | 187A1.000 | M | + | | 09/03 ▸ | 46798743 | 732925 | 581 317 | ALM |
| 1.1 i | 169/AXA1/CXA1 | E | 1108 | 187A1.000 | M | + | | 06/06 ▸ | 51779915 | 735175 | | |
| 752566 ▸ | | | | | | | | | | | | |
| 1.1 i,1.1 i Eco | 169/AXA1/CXA1 | E | 1108 | 187A1.000 | M | - | | 09/03 ▸ | 51773189 | 734923 | 501 317 | ALM |
| 1.1 i | 169/AXA1/CXA1 | E | 1108 | 187A1.000 | M | - | | 09/03 ▸ | 46798741 | 732924 | 501 317 | ALM |
| 1.1 i | 169/AXA1/CXA1 | E | 1108 | 187A1.000 | M | | | 10/04 ▸ 06/05 | 51759805 | 734923 | 501 317 | ALM |
| 1.1 i | 169/AXA1/CXA1 | E | 1108 | 187A1.000 | M | | | 10/04 ▸ 06/05 | 51759806 | 734924 | 581 317 | ALM |
| 1.2 i | 169/AXB1/CXB1 | E | 1242 | 188A4.000 | M | +/- | | 06/05 ▸ | 51773192 | 734924 | 581 317 | ALM |
| 1.2 i | 169/AXB1/AXB2/CXB1 | E | 1242 | 188A4.000 | M | + | | 09/03 ▸ | 46798743 | 732925 | 581 317 | ALM |
| 1.2 i | 169/AXB1/CXB1 | E | 1242 | 188A4.000 | M | + | | 06/06 ▸ | 51779915 | 735175 | | |
| 752566 ▸ | | | | | | | | | | | | |
| 1.2 i | 169/AXB1/AXB2/CXB1 | E | 1242 | 188A4.000 | M | - | | 09/03 ▸ | 46798741 | 732924 | 501 317 | ALM |
| 1.2 i | 169/AXB1/CXB1 | E | 1242 | 188A4.000 | M | - | | 09/03 ▸ | 51773189 | 734923 | 501 317 | ALM |
| 1.2 i | 169/AXB1/CXB1 | E | 1242 | 188A4.000 | M | - | | 10/04 ▸ 06/05 | 51759805 | 734923 | 501 317 | ALM |
| 1.2 i | 169/AXB1/CXB1 | E | 1242 | 188A4.000 | M | | | 10/04 ▸ 06/05 | 51759806 | 734924 | 581 317 | ALM |

# FIAT (.../...)

## PANDA (2003>2009) (.../...)

| Type Ctr. | | CC | | AC | | | OE | Valeo | DIM. | TECH |
|---|---|---|---|---|---|---|---|---|---|---|
| 1.3 JTD Multijet 16V 169/AXC1/CXC1 | D | 1248 | 188A9.000 | M | +/- | | 09/03 ▸ 10/04 | 51706204 | **734932** | 579,6 331 | ALB |
| 1.3 JTD Multijet 16V 169/AXC1/AXC2/CXC1 | D | 1248 | 188A9.000 | M | +/- | | 10/04 ▸ 06/05 | 51759807 | **734932** | 579,6 331 | ALB |
| 1.3 JTD Multijet 16V 169/AXC1/AXC2/CXC1 | D | 1248 | 188A9.000 | M | +/- | | 06/05 ▸ | 51773195 | **734932** | 579,6 331 | ALB |
| 1.3 JTD Multijet 16V 169AXC1 | D | 1248 | 188A9.000 | M | - | | 09/03 ▸ | 51706204 | **734932** | 579,6 331 | ALB |
| 1.3 JTD Multijet 16V 169/AXC2/AXD1/CXC1 | D | 1248 | 169A1.000,188A9.000 | M | | | 09/03 ▸ | 51706204 | **734932** | 579,6 331 | ALB |

## PANDA (2009>2010)

| | | | | | | | | | | | |
|---|---|---|---|---|---|---|---|---|---|---|---|
| 1.2 i GNV 60,1.2 i LPG 60<br>1.2 i LPG 69 169/AXB1/CXB1 | F | 1242 | 169A4.000,188A4.000 | M | | | 08/09 ▸ 06/10 | 51779915 | **735175** | | |
| 1.1 i 54 169AXAI | E | 1108 | 187A1.000 | M | + | | 08/09 ▸ 06/10 | 51773189 | **734923** | 501 317 | ALM |
| 1.1 i 54 169CXAI | E | 1108 | 187A1.000 | M | | | 08/09 ▸ 06/10 | 51773189 | **734923** | 501 317 | ALM |
| 1.2 i 60,1.2 i 69 169/AXBI/AXFI/CXBI<br>CXF2/CXFI | E | 1242 | 169A4.000,188A4.000 | M | | | 08/09 ▸ 06/10 | 51779915 | **735175** | | |
| 1.2 i 60,1.2 i 69 169AXF2 | E | 1242 | 169A4.000,188A4.000 | M | | | 08/09 ▸ 06/10 | 51773192 | **734924** | 581 317 | ALM |
| 1.3 MJTD 70 16V 169/AXC2/AXG2/CXCI<br>1.3 MJTD 75 16V CXG2 | D | 1248 | 169A5.000,188A8.000 | M | | | 08/09 ▸ 06/10 | 51773192 | **734924** | 581 317 | ALM |

## PANDA (2011>)

| | | | | | | | | | | | |
|---|---|---|---|---|---|---|---|---|---|---|---|
| 1.2 i LPG 69 169/AXB1/CXB1 | F | 1242 | 169A4.000 | M | | | 07/10 ▸ | 51779915 | **735175** | | |
| 1.4 i GNV 77 169/AXH1/CXH1 | F | 1368 | 350A1.000 GNV | M | | | 07/10 ▸ | 51773192 | **734924** | 581 317 | ALM |
| 1.1 i 54 169AXAI | E | 1108 | 187A1.000 | M | | | 07/10 ▸ | 51779915 | **735175** | | |
| 1.2 i 69 169/AXF2/CXF2 | E | 1242 | 169A4.000 | M | | | 07/10 ▸ | 51773192 | **734924** | 581 317 | ALM |
| 1.2 i 60,1.2 i 69 169/AXBI/AXFI/CXFI | E | 1242 | 169A4.000,188A4.000 | M | | | 07/10 ▸ | 51779915 | **735175** | | |

## PUNTO (93>99)

| | | | | | | | | | | | |
|---|---|---|---|---|---|---|---|---|---|---|---|
| 55 S 176AH53 | E | 1108 | 176A6.000 | M | +/- | TSW 819827 | 07/93 ▸ 07/94 | 7721579 | **730980** | 580 322 | ALM |
| 55 ED,55 EL 6 speed,55 S<br>55 SX,55 SX 6 speed 176/AQ/AQ53/AQ55<br>AQ63 | E | 1108 | 176B2.000 | M | + | TSW 819827 | 07/96 ▸ 09/99 | 46407450 | **732705** | 580 317 | ALM |
| 55 ED,55 EL,55 S,55 SX 176/AA53/AA55/AA5C<br>AA63 | E | 1108 | 176A6.000 | M | - | TSW | 07/93 ▸ 04/97 | 46465021 | **731562** | 567 322 | ALM |
| 55 ED,55 EL 6 speed,55 S<br>55 SX,55 SX 6 speed 176/AQ/AQ53/AQ55<br>AQ63 | E | 1108 | 176B2.000 | M | - | EXP, TSW | 10/94 ▸ 09/99 | 46465015 | **730976** | 435 322 | ALM |
| 55 ED,55 EL,55 S,55 SX 176/AA53/AA55/AA5C<br>AA63/AH53 | E | 1108 | 176A6.000 | M | | EXP, TSW | 07/93 ▸ 04/97 | 46465015 | **730976** | 435 322 | ALM |
| 60 Opera,60 S,60 SX 176/AC53/AC55/AR53<br>60 Star,75 ELX,75 HSD AR55/AR5F/BR52<br>75 SX | E | 1242 | 176A8.000,176B4.000 | M | + | TSW | 07/93 ▸ 10/97 | 7760959 | **731975** | 270 757 | CBS |
| 85 ELX,85 Sporting 176/AV52/AV53/AV55<br>BV53 | E | 1242 | 176B9.000 | M | + | TSW | 05/97 ▸ 10/97 | 46473867 | **734219** | 270 757 | ALB |
| 60 Opera,60 S,60 SX 176/AR53/AR55/AR5F<br>60 Star BR52 | E | 1242 | 176B4.000 | M | + | TSW | 11/97 ▸ 09/99 | 46407450 | **732705** | 580 317 | ALM |
| 75 ELX,75 HSD,75 SX 176/AC53/AC55/AV52<br>85 ELX,85 Sporting AV53/AV55/BV53 | E | 1242 | 176A8.000,176B9.000 | M | + | TSW | 11/97 ▸ 09/99 | 46527489 | **734221** | 630 322 | ALM |
| 60 Opera,60 S,60 SX 176/AB52/AC53/AC55<br>60 Star,75 ELX,75 HSD AR53/AR55/AR5F/AV52<br>75 SX,85 ELX,85 Sporting AV53/AV55/BB52/BB53<br>BB55/BB5F/BR52/BV53 | E | 1242 | 176A7.000,176A8.000,176B4.000<br>176B9.000 | M | - | TSW | 07/93 ▸ 09/99 | 46465021 | **731562** | 567 322 | ALM |
| 75 ELX,75 HSD,75 SX 176/AC53/AC55 | E | 1242 | 176A8.000 | M | - | | 02/98 ▸ 09/99 | 46539978 | | 568 322 | ALM |
| 60 ELX,60 SX 176/AP13/AP15/AR12<br>AR13/AR15 | E | 1242 | 176B1.000,176B4.000 | A | + | TSW | 05/94 ▸ 09/99 | 7794871 | **731978** | 270 661 | CBS |
| 60 ELX,60 SX 176/AP13/AP15/AR12<br>AR13/AR15 | E | 1242 | 176B1.000,176B4.000 | A | - | TSW | 05/94 ▸ 09/99 | 46465017 | **731558** | 567 322 | ALM |
| GT 176/AD53/AS53 | E | 1372 | 176A4.000,176B6.000 | M | - | TSW 819827 | 07/93 ▸ 09/99 | 7721579 | **730980** | 580 322 | ALM |
| 90 ELX,ELX 176/AL52/BL52/BL53<br>BL55 | E | 1581 | 176A9.000 | M | + | TSW 819827 | 11/93 ▸ 04/97 | 7783504 | **731976** | 270 757 | CBS |
| 90 ELX,ELX 176/AL52/BL52/BL53<br>BL55 | E | 1581 | 176A9.000 | M | - | TSW | 11/93 ▸ 04/97 | 46430837 | **731374** | 322 567 | ALM |
| 60 Diva,60 S,60 SX,70 ELX 176/AF/AF53/AF55<br>70 SX,ELX,S,SX AF5C/AF5F/AG53/AI53<br>AI55/AT/AT53/AT55/CG/CG53/CG55 | D | 1697 | 176A3.000,176A3.000F<br>176A5.000,176B3.000,176B7.000 | M | + | TSW | 07/93 ▸ 09/99 | 46723249 | **731977** | 270 757 | CBS |
| 60 Diva,60 S,60 SX,70 ELX 176/AF/AF53/AF55<br>70 SX,ELX,S,SX AF5C/AF5F/AG53/AT<br>AT53/AT55/CG/CG53/CG55 | D | 1697 | 176A3.000,176A3.000F<br>176A5.000,176B7.000 | M | - | TSW | > ▸ 09/99 | 46466627 | **730981** | 632 322 | ALM |
| 60 Diva,60 S,60 SX,70 ELX 176/AF/AF53/AF55<br>70 SX,ELX,S,SX AF5C/AF5F/AG53/AT<br>AT53/AT55/CG/CG53/CG55 | D | 1697 | 176A3.000,176A3.000F<br>176A5.000,176B7.000 | M | - | TSW | 07/93 ▸ 09/99 | 71735351 | **730981** | 632 322 | ALM |

Radiator Radiateur Motorkühler Radiatore di raffreddamento Radiator Radyatör Радиатор Radiador Radiator Vodní chladič Ψυγείο



• **New** Nouveau **Nuevo** Novo **Nuovo** Nieuw **Neu** Nowość **Yeni** Новый Νέο **Novy**

# FIAT (.../...)

| | | CC | | | AC | | | | Valeo | DIM. | TECH |
|---|---|---|---|---|---|---|---|---|---|---|---|
| **PUNTO (93>99) (.../...)** | | | | | | | | | | | |
| 60 Diva,60 S,60 SX,70 ELX<br>70 SX,ELX,S,SX | 176/AF/AF53/AF55<br>AF5C/AF5F/AG53/AI53<br>AI55/AT/AT53/AT55/CG/CG53/CG55 | D | 1697 | 176A3.000,176A3.000F<br>176A5.000,176B3.000,176B7.000 | M | - | TSW | 07/93 ▸ | 7718669 | **730981** | 632 322 | ALM |
| **PUNTO II (99>2003)** | | | | | | | | | | | |
| 1.2 i,1.2 i 16V | 188/AX/AXA1/AXB1/BX<br>BXA1/BXB1 | E | 1242 | 188A4.000,188A5.000 | M | +/- | type Denso | 07/99 ▸ 10/02 | 46788046 | **734225** | 580 316 | ALM |
| 1.2 i | 188/AXA1/BXA1 | E | 1242 | 188A4.000 | M | +/- | type Valeo | 07/99 ▸ 11/01 | 46778148 | **732578** | 580 317 | ALM |
| 1.2 i,1.2 i 16V | 188/AX/AXA1/BX/BXA1 | E | 1242 | 188A4.000,188A5.000 | M | +/- | type Valeo | 12/01 ▸ 06/03 | 46827081 | **732851** | 579 317 | ALM |
| 1.2 i,1.2 i 16V | 188/AX/AXA1/BX/BXA1 | E | 1242 | 188A4.000,188A5.000 | M | + | type Valeo | 07/99 ▸ | 46745049 | **732578** | 580 317 | ALM |
| 1.2 i,1.2 i 16V | 188/AX/AXA1/AXB1/BX<br>BXA1/BXB1 | E | 1242 | 188A4.000,188A5.000 | M | + | | 10/02 ▸ 06/03 | 51714679 | **734459** | 580 317 | ALM |
| 1.2 i,1.2 i 16V | 188/AX/AXB1/BX/BXB1 | E | 1242 | 188A4.000,188A5.000 | M | - | type Valeo | 07/99 ▸ 11/01 | 46778148 | **732578** | 580 317 | ALM |
| 1.2 i 16V | 188/AXB1/BXB1 | E | 1242 | 188A5.000 | M | - | type Valeo | 12/01 ▸ 06/03 | 46827081 | **732851** | 579 317 | ALM |
| 1.2 i | 188AX | E | 1242 | 188A4.000 | M | | type Valeo | 12/01 ▸ 06/03 | 46827081 | **732851** | 579 317 | ALM |
| 1.2 i 16V | 188/AX/AXB1/BXB1 | E | 1242 | 188A5.000 | A | +/- | type Denso | 07/99 ▸ 10/02 | 46788046 | **734225** | 580 316 | ALM |
| 1.2 i 16V | 188/AX/AXB1/BXB1 | E | 1242 | 188A5.000 | A | + | type Valeo | 07/99 ▸ 11/01 | 46778148 | **732578** | 580 317 | ALM |
| 1.2 i 16V | 188AX | E | 1242 | 188A5.000 | A | + | type Valeo | 07/99 ▸ | 46745049 | **732578** | 580 317 | ALM |
| 1.2 i 16V | 188/AX/AXB1/BXB1 | E | 1242 | 188A5.000 | A | + | type Valeo | 11/01 ▸ 06/03 | 46827081 | **732851** | 579 317 | ALM |
| 1.2 i 16V | 188/AX/AXB1/BXB1 | E | 1242 | 188A5.000 | A | + | | 10/02 ▸ 06/03 | 51714679 | **734459** | 580 317 | ALM |
| 1.2 i 16V | 188/AX/AXB1/BXB1 | E | 1242 | 188A5.000 | A | - | type Valeo | 12/01 ▸ 06/03 | 46827082 | **732851** | 579 317 | ALM |
| 1.8 i 16V | 188AX | E | 1747 | 183A1.000 | M | +/- | | 07/99 ▸ 06/03 | 46546944 | **732913** | 580 322 | ALM |
| 1.8 i 16V | 188AX | E | 1747 | 183A1.000 | M | +/- | type Valeo | 11/01 ▸ 06/03 | 46827081 | **732851** | 579 317 | ALM |
| 1.8 i 16V | 188/AXF1/BXF1 | E | 1747 | 188A6.000 | M | | | 07/99 ▸ 06/03 | 46546944 | **732913** | 580 322 | ALM |
| 1.9 JTD | 188/AX/AXE1/AXG1/BX<br>BXE1 | D | 1910 | 188A2.000,188A7.000 | M | + | | 07/99 ▸ 06/03 | 46546944 | **732913** | 580 322 | ALM |
| 1.9 D | 188/AX/AXD1/BXD1 | D | 1910 | 188A3.000 | M | + | | 07/99 ▸ 06/03 | 46739749 | **734224** | 700 306 | ALB |
| 1.9 D | 188/AXD1/BXD1 | D | 1910 | 188A3.000 | M | - | | 07/99 ▸ 01/00 | 46524619 | **732913** | 580 322 | ALM |
| 1.9 JTD | 188/AX/AXE1/AXG1/BX<br>BXE1 | D | 1910 | 188A2.000,188A7.000 | M | - | | 07/99 ▸ 06/03 | 46778155 | **732913** | 580 322 | ALM |
| 1.9 D | 188/AX/AXD1/BXD1 | D | 1910 | 188A3.000 | M | - | | 07/99 ▸ 06/03 | 46546944 | **732913** | 580 322 | ALM |
| 1.9 D | 188/AXD1/BXD1 | D | 1910 | 188A3.000 | M | - | | 01/00 ▸ | 46776301 | **732913** | 580 322 | ALM |
| **PUNTO II (2003>)** | | | | | | | | | | | |
| 1.2 i Bipower | 188BXA1 | F | 1242 | 188A4.000 | M | +/- | type Valeo | 07/03 ▸ 08/09 | 51724188 | **732923** | 580 317 | ALM |
| 1.2 i Bipower | 188CXA1 | F | 1242 | 188A4.000 | M | | type Valeo | 07/03 ▸ 01/08 | 51724188 | **732923** | 580 317 | ALM |
| 1.2 i Bipower | 188/BXA1/CXA1 | F | 1242 | 188A4.000 | M | | | 07/03 ▸ 08/09 | 51724183 | **734457** | 580 317 | ALM |
| 1.2 i,1.2 i 16V | 188/AXA1/AXB1/BXB1 | E | 1242 | 188A4.000,188A5.000 | M | +/- | type Valeo | 07/03 ▸ 08/09 | 51724188 | **732923** | 580 317 | ALM |
| 1.2 i | 188CXA1 | E | 1242 | 188A4.000 | M | | type Valeo | 07/03 ▸ 01/08 | 51724188 | **732923** | 580 317 | ALM |
| 1.2 i,1.2 i 16V | 188/AXA1/AXB1/BXB1<br>CXA1 | E | 1242 | 188A4.000,188A5.000 | M | | | 07/03 ▸ 08/09 | 51724183 | **734457** | 580 317 | ALM |
| 1.4 i 16V | 188/AXM1/BXM1 | E | 1368 | 843A1.000 | M | | | 07/03 ▸ 08/09 | 51723827 | **734458** | 580 306 | ALB |
| 1.8 i 16V | 188AXF1 | E | 1747 | 188A6.000 | M | | | 07/03 ▸ 08/09 | 46546944 | **732913** | 580 322 | ALM |
| 1.3 JTD 16V | 188/AXH1/BXH1/CXH1 | D | 1248 | 188A9.000 | M | + | | 07/03 ▸ 08/09 | 51708005 | **734361** | 580 305 | ALB |
| 1.3 JTD 16V | 188/AXH1/BXH1/CXH1 | D | 1248 | 188A9.000 | M | - | | 07/03 ▸ 08/09 | 51733001 | **734361** | 580 305 | ALB |
| 1.9 JTD | 188/AXG1/BXG1 | D | 1910 | 188A7.000 | M | + | | 07/03 ▸ 08/09 | 46546944 | **732913** | 580 322 | ALM |
| 1.9 JTD | 188/AXG1/BXG1 | D | 1910 | 188A7.000 | M | - | | 07/03 ▸ 08/09 | 46778155 | **732913** | 580 322 | ALM |
| 1.9 JTD | 188/AXL1/BXL1 | D | 1910 | 188B2.000 | M | | | 07/03 ▸ 08/09 | 51708727 | **732913** | 580 322 | ALM |
| **PUNTO EVO (2009>)** | | | | | | | | | | | |
| 1.4 MPI-GNV 70/77<br>1.4 i GPL | 199/AXB1/BXB1 | F | 1368 | 350A1.000 GNV,350A1.000 GPL | M | | | 10/09 ▸ | 55700447 | **735042** | 540 377,5 | ALM |
| 1.2 i 65 | 199/AXA1/BXA1 | E | 1242 | 199A4.000 | M | | | 10/09 ▸ | 55700447 | **735042** | 540 377,5 | ALM |
| 1.4 i 105 16V,1.4 i 77 | 199/AXB1/AXV1/BXB1<br>BXV1 | E | 1368 | 350A1.000,955A6.000 | M | | | 10/09 ▸ | 55700447 | **735042** | 540 377,5 | ALM |
| 1.4 TB 135 16V | 199/AXW1/BXW1 | E | 1368 | 955A2.000 | M | | | 10/09 ▸ | 55704135 | **735041** | 620 414,5 | ALB |
| 1.6 TD 120 16V | 199/AXS1/BXS1 | D | 1598 | 955A3.000 | M | | | 10/09 ▸ | 55704135 | **735041** | 620 414,5 | ALB |
| **REGATA** | | | | | | | | | | | |
| 70ES | 138AB54 | G | 1301 | 138B2.000-G | M | + | | 1985 ▸ 11/85 | 7566878 | | 630 359 | ALM |
| 70ES | 138AB54 | G | 1301 | 138B2.000-G | M | - | TSW | 1985 ▸ 11/85 | 7566876 | **883806** | 417 359 | ALM |
| 60 | 138A | E | 1116 | 146A4.000 | M | | TSW | 07/86 ▸ 1990 | 7566876 | **883806** | 417 359 | ALM |
| 70S | 138A934 | E | 1299 | 149C4.028 | A | + | | 07/86 ▸ 1990 | 7566878 | | 630 359 | ALM |
| 70S | 138A934 | E | 1299 | 149C4.028 | A | - | TSW | 07/86 ▸ 1990 | 7566876 | **883806** | 417 359 | ALM |
| 70,70ES,70S | 138/AA44/AA54/AA55<br>AB54/AI54/AX44/AX54/AX55 | E | 1301 | 138B2.000,149A7.000 | M | + | | 09/83 ▸ | 7566878 | | 630 359 | ALM |
| 70,70ES,70S | 138/AA44/AA55/AB54<br>AI54/AX44/AX54/AX55 | E | 1301 | 138B2.000,149A7.000 | M | - | TSW | 09/83 ▸ 1990 | 7566876 | **883806** | 417 359 | ALM |
| 70,70S | 138AA54 | E | 1301 | 138B2.000 | M | - | TSW | 1985 ▸ 06/86 | 7566877 | **883806** | 417 359 | ALM |
| 75S | 138A | E | 1498 | 138C3.048 | M | + | | 09/83 ▸ 03/85 | 7566879 | | 560 359 | ALM |

# FIAT (.../...)

## REGATA (.../...)

| | | | CC | | | AC | | | OE | Valeo | DIM. | TECH |
|---|---|---|---|---|---|---|---|---|---|---|---|---|
| 75,75S,75Sie,75ie,85S | 138/A/AC54 | E | 1498 | 138B3.000,138C2.048,138C3.048 | M | + | | 09/83 ▸ 1990 | 7566878 | | 630 359 | ALM |
| 85S | 138AC54 | E | 1498 | 138B3.000 | M | - | TSW | 09/83 ▸ 06/86 | 7566877 | **883806** | 417 359 | ALM |
| 75,75S,75Sie,75ie | 138A | E | 1498 | 138C2.048,138C3.048 | M | - | TSW | 09/83 ▸ 1990 | 7566876 | **883806** | 417 359 | ALM |
| 85,85S | 138/AC34/AC64 | E | 1498 | 138B3.000 | A | + | | 09/83 ▸ 06/86 | 7566879 | | 560 359 | ALM |
| 75S,85S | 138/A/AU34 | E | 1498 | 138C3.048,149A5.000 | A | + | | 07/86 ▸ 1990 | 7566878 | | 630 359 | ALM |
| 75S,85,85S | 138/A/AC34/AC64/AU34 | E | 1498 | 138B3.000,138C3.048,149A5.000 | A | - | TSW | 09/83 ▸ 1990 | 7566876 | **883806** | 417 359 | ALM |
| 85S | 138AC64 | E | 1498 | 138B3.000 | A | - | TSW | 1986 ▸ 06/86 | 7566877 | **883806** | 417 359 | ALM |
| 100 Sie,100S,100Sie,85<br>85S | 138/A754/A755/AD54<br>AD55/AE54/AR54/AR55 | E | 1585 | 149A.000,149A4.000,149C3.000 | M | + | | 09/83 ▸ | 7566878 | | 630 359 | ALM |
| 100S,85,85S | 138/AD54/AD55/AE54<br>AR54 | E | 1585 | 149A.000,149A4.000 | M | - | TSW | 09/83 ▸ 1990 | 7566877 | **883806** | 417 359 | ALM |
| 100 Sie,100S,100Sie,85S | 138/A754/A755/AE54<br>AR55 | E | 1585 | 149A.000,149A4.000,149C3.000 | M | - | | 09/84 ▸ 1990 | 7572592 | | 417 359 | ALM |
| 90Sie | | E | 1585 | 149C2.000 | M | | | 01/87 ▸ 07/89 | 7572592 | | 417 359 | ALM |
| 85S | 138AU54 | E | 1585 | 149A.000 | M | + | | 07/86 ▸ 1990 | 7566878 | | 630 359 | ALM |
| 85S | 138AU54 | E | 1585 | 149A.000 | M | - | TSW | 07/86 ▸ 1990 | 7566876 | **883806** | 417 359 | ALM |
| - | 138AJ54 | D | 1697 | 149B3.000 | M | - | | 1985 ▸ 06/86 | 7572602 | | 601 347 | ALB |
| - | 138AF54 | D | 1714 | 136B6.000 | M | - | | 1985 ▸ 06/86 | 7572602 | | 601 347 | ALB |
| - | 138AG54/55 | D | 1929 | 149A1.000 | M | - | | 09/83 ▸ 06/86 | 7572602 | | 601 347 | ALB |
| - | 138AZ54 | D | 1929 | 831D1.000 | M | - | | 09/86 ▸ 1990 | 7551788 | | 601 368 | ALB |
| - | 138AZ55 | D | 1929 | 831D1.000 | M | | | 09/87 ▸ | 7551788 | | 601 368 | ALB |

## RITMO (83>88)

| | | | | | | | | | | | | |
|---|---|---|---|---|---|---|---|---|---|---|---|---|
| 60 | 138A434 | E | 1049 | 127A6.000 | M | - | | 11/82 ▸ 03/85 | 7566875 | | 362 359 | ALM |
| 60 CL,60 ES | 138/A4F3/A4IE/A4II | E | 1116 | 138C1.000,146A4.000 | M | + | | 04/85 ▸ 1988 | 7566879 | | 560 359 | ALM |
| 60 CL,60 ES | 138/A4F3/A4F4/A4IE<br>A4II | E | 1116 | 138C1.000,146A4.000 | M | + | | 04/85 ▸ 1988 | 7566878 | | 630 359 | ALM |
| 60 CL,60 ES,60 L | 138/A434/A44/A4E<br>A4F3/A4F4/A4II | E | 1116 | 138B.000,138B1.000,146A4.000 | M | - | | 11/82 ▸ 1988 | 7566875 | | 362 359 | ALM |
| 60 ES | 138A4IE | E | 1116 | 138C1.000 | M | - | | 04/85 ▸ 1988 | 7566880 | | 362 359 | ALM |
| 50 CL | 138A | E | 1116 | 146A | M | | | 04/85 ▸ 1988 | 7572592 | | 417 359 | ALM |
| 70 CL | 138/A52/A532 | E | 1299 | 138B3.028 | A | + | | 04/85 ▸ 1988 | 7566878 | | 630 359 | ALM |
| 70 CL | 138/A52/A532 | E | 1299 | 138B3.028 | A | + | | 04/85 ▸ 1988 | 7566879 | | 560 359 | ALM |
| 70 CL | 138/A52/A532 | E | 1299 | 138B3.028 | A | - | TSW | 04/85 ▸ 1988 | 7566876 | **883806** | 417 359 | ALM |
| 70 CL | 138A5II | E | 1301 | 149A7.003 | M | + | | 04/85 ▸ 1988 | 7566879 | | 560 359 | ALM |
| 70 CL | 138A5II | E | 1301 | 149A7.003 | M | + | | 04/85 ▸ 1988 | 7566878 | | 630 359 | ALM |
| 70,70 CL | 138/A5/A53/A56C/A5II | E | 1301 | 138B2.000,149A7.003 | M | - | TSW | 11/82 ▸ 1988 | 7566876 | **883806** | 417 359 | ALM |
| 70 CL | 138A56 | E | 1301 | 138B2.000 | A | - | TSW | 11/82 ▸ 03/85 | 7566876 | **883806** | 417 359 | ALM |
| 75,75 CLie,75 Sie,85,85 S | 138/A/A6I/A6I3/A7I<br>A7I3 | E | 1498 | 138C2.048,149A5.000 | M | + | | 04/85 ▸ 1988 | 7566879 | | 560 359 | ALM |
| 75,75 CLie,75 Sie,85,85 S | 138/A/A6I/A6I3/A7I<br>A7I3 | E | 1498 | 138C2.048,149A5.000 | M | + | | 04/85 ▸ 1988 | 7566878 | | 630 359 | ALM |
| 85 S,Bertone | 138/A7/A73/AS | E | 1498 | 138A2.000,138B3.000 | M | - | TSW | 11/82 ▸ 03/85 | 5974838 | **883806** | 417 359 | ALM |
| 85 S | 138A7I | E | 1498 | 149A5.000 | M | - | TSW | 04/85 ▸ 1988 | 7566877 | **883806** | 417 359 | ALM |
| 75,75 CLie,75 Sie,85 | 138/A/A6I/A6I3/A7I3 | E | 1498 | 138C2.048,149A5.000 | M | - | TSW | 04/85 ▸ 1988 | 7566876 | **883806** | 417 359 | ALM |
| Palinuro | 138AS1 | E | 1498 | 138A4.000 | M | | TSW | 04/85 ▸ 1988 | 7566876 | **883806** | 417 359 | ALM |
| Palinuro | 138AS1 | E | 1498 | 138A4.000 | M | | | 04/85 ▸ 1988 | 7572592 | | 417 359 | ALM |
| 75,85 | 138/A62/A632/A72/A732 | E | 1498 | 138B3.000 | A | + | | 04/85 ▸ 1988 | 7566879 | | 560 359 | ALM |
| 75,85 | 138/A62/A632/A72/A732 | E | 1498 | 138B3.000 | A | + | | 04/85 ▸ 1988 | 7566878 | | 630 359 | ALM |
| 85 S | 138/A72/A76 | E | 1498 | 138B3.000 | A | - | TSW | 11/82 ▸ 03/85 | 5974838 | **883806** | 417 359 | ALM |
| 75,85 | 138/A62/A632/A72/A732 | E | 1498 | 138B3.000 | A | - | TSW | 04/85 ▸ 1988 | 7566876 | **883806** | 417 359 | ALM |
| 100 S,105 TC,Palinuro | 138/A8/A8II/AS5 | E | 1585 | 138AR.000,149A4.048 | M | - | | 11/82 ▸ 1988 | 7572592 | | 417 359 | ALM |
| 90 Sie | 138A | E | 1585 | 149C2.000 | M | | | 04/85 ▸ 1988 | 7572592 | | 417 359 | ALM |
| 130 TC | 138A9A | E | 1995 | FIAT04 | M | - | | 11/82 ▸ 03/85 | 7572592 | | 417 359 | ALM |
| CL | 138/A5D/A5D3 | D | 1697 | 149B3.000 | M | - | | 11/82 ▸ 1988 | 7572602 | | 601 347 | ALB |
| - | 138/A4D/A4D3 | D | 1714 | 138B6.000 | M | - | | 02/83 ▸ 03/85 | 7572602 | | 601 347 | ALB |
| DS | 138A6DT | D | 1929 | 831D1.000 | M | - | | 02/86 ▸ 1988 | 5965907 | | 601 347 | ALB |

## SEICENTO

| | | | | | | | | | | | | |
|---|---|---|---|---|---|---|---|---|---|---|---|---|
| - | 187/AEA1/AXA | L | - | ELETTRA | A | - | TSW | 09/98 ▸ | 46475456 | **730309** | 450 248 | ALM |
| - | 187/AEA1/AXA | L | - | ELETTRA | A | - | TSW | 09/98 ▸ 08/05 | 46783702 | **730520** | 467 248 | ALM |
| 0.9 i | 187/AXA/AXA1 | E | 899 | 1170A1.046,1170A1.046F | M | - | TSW | 03/98 ▸ | 46475456 | **730309** | 450 248 | ALM |
| 0.9 i | 187/AXA/AXA1 | E | 899 | 1170A1.046,1170A1.046F | M | - | TSW | 03/98 ▸ 08/05 | 46783702 | **730520** | 467 248 | ALM |
| 0.9 i | 187AXA1 | E | 899 | 1170A1.046F | A | - | TSW | 03/98 ▸ 08/00 | 46783702 | **730520** | 467 248 | ALM |
| 0.9 i | 187AXA1 | E | 899 | 1170A1.046F | A | - | TSW | 03/98 ▸ 09/00 | 46475456 | **730309** | 450 248 | ALM |
| 1.1 i<br>0466542 ▸ | 187AXB1 | E | 1108 | 176B2.000 | M | +/- | TSW | 03/98 ▸ 08/00 | 46783702 | **730520** | 467 248 | ALM |
| 1.1 i | 187AXB1 | E | 1108 | 176B2.000 | M | +/- | TSW | 03/98 ▸ | 46475456 | **730309** | 450 248 | ALM |
| 1.1 i | 187/AXC1/CXC1 | E | 1108 | 187A1.000 | M | +/- | TSW 819774 | 09/00 ▸ 08/05 | 46558704 | **732789** | 450 285 | ALM |

Radiator Radiateur Motorkühler Radiatore di raffreddamento Radiator Radyatör Radiator Радиатор vízhűtő Vodní chladič Radiator Ψυγείο



• **New** Nouveau **Nuevo** Novo **Nuovo** Nieuw **Neu** Nowość **Yeni** Новый Νέο **Novy**

| | Type Ctr. | E | CC | | AC | | | OE | Valeo | DIM. | TECH |
|---|---|---|---|---|---|---|---|---|---|---|---|
| **SEICENTO (.../...)** | | | | | | | | | | | |
| 1.1 i | 187CXB | E | 1108 | 176B2.000 | M | | TSW | > ▸ 08/00 | 46783702 | **730520** | 467 248 | ALM |
| 466542 ▸ | | | | | | | | | | | |
| 1.1 i | 187CXC1 | E | 1108 | 187A1.000 | M | | TSW 819774 | 09/00 ▸ 08/05 | 46558704 | **732789** | 450 285 | ALM |
| **SIENA (97>2001)** | | | | | | | | | | | |
| 1.2 i | 178/CXG1/CXS1 | E | 1242 | 178B5.000,178C4.066 | M | + | TSW | 09/98 ▸ 12/01 | 46750718 | **732005** | 522 359 | ALM |
| 1.2 i | 178/CXG1/CXS1 | E | 1242 | 178B5.000,178C4.066 | M | + | TSW | 09/98 ▸ | 46417059 | **732005** | 522 359 | ALM |
| 1.2 i | 178CXS1 | E | 1242 | 178C4.066 | M | + | TSW | 06/00 ▸ 12/01 | 46548485 | **732005** | 522 359 | ALM |
| 1.2 i | 178/CXG1/CXS1 | E | 1242 | 178B5.000,178C4.066 | M | - | TSW | 09/98 ▸ 12/01 | 46449104 | **732006** | 522 359 | ALM |
| 1.2 i | 178CXS1 | E | 1242 | 178C4.066 | M | - | TSW | 06/99 ▸ 12/01 | 46750717 | **732812** | 520 359 | ALM |
| 1.2 i | 178CXS1 | E | 1242 | 178C4.066 | M | - | TSW | 06/00 ▸ 12/01 | 46548483 | **732006** | 522 359 | ALM |
| 1.4 i | 178/CXC/CXP | E | 1372 | 178B2.000,178B2.016 | M | + | TSW | 11/97 ▸ 12/01 | 46750718 | **732005** | 522 359 | ALM |
| 1.4 i | 178/CXC/CXP | E | 1372 | 178B2.000,178B2.016 | M | + | TSW | 11/97 ▸ | 46417059 | **732005** | 522 359 | ALM |
| 1.4 i | 178/CXC/CXP | E | 1372 | 178B2.000,178B2.016 | M | - | TSW | 11/97 ▸ 12/01 | 46449104 | **732006** | 522 359 | ALM |
| 1.6 i | 178CXV1 | E | 1580 | 178D2.011 | M | +/- | TSW | 06/99 ▸ 12/01 | 46417050 | **732007** | 521 340 | ALB |
| 1.6 i | 178CXV1 | E | 1580 | 178D2.011 | M | + | | 06/99 ▸ 12/01 | 46552135 | | 520 340 | ALB |
| 1.6 i | 178CXV1 | E | 1580 | 178D2.011 | M | - | | 06/99 ▸ 12/01 | 46778884 | | | |
| 1.6 i 16V | 178/CXD/CXQ | E | 1581 | 178B3.000,178C7.098 | M | +/- | TSW | 11/97 ▸ 12/01 | 46417050 | **732007** | 521 340 | ALB |
| 1.7 D,1.7 TD | 178/CXN/CXT1/CYB1 | D | 1697 | 176B3.000,176B7.000,178C9.066 | M | +/- | TSW | 09/98 ▸ 12/01 | 46440541 | **732147** | 520 367,9 | ALB |
| 1.2 i,1.6 i | 178 | | - | | M | + | TSW | 1997 ▸ | 46417059 | **732005** | 522 359 | ALM |
| 1.2 i | 178 | | - | | M | - | TSW | 1997 ▸ 12/01 | 46449104 | **732006** | 522 359 | ALM |
| **SIENA (2002>)** | | | | | | | | | | | |
| 1.2 i | 178CYA1 | E | 1242 | 188A4.000 | M | +/- | TSW | 01/02 ▸ | 46819261 | **732948** | 522 377,5 | ALM |
| 1.2 i 16V | | E | 1242 | 178D7055 | M | +/- | TSW | 01/02 ▸ | 46833511 | **732948** | 522 377,5 | ALM |
| 1.2 i 16V | | E | 1242 | 188A5.000 | M | +/- | | 01/02 ▸ | 46826678 | **735296** | 520 370 | |
| 1.6 i 16V | | E | 1596 | 182B6.000 | M | + | | 01/02 ▸ | 46826678 | **735296** | 520 370 | |
| 1.6 i 16V | | E | 1596 | 182B6.000 | M | | TSW | 01/02 ▸ | 46819261 | **732948** | 522 377,5 | ALM |
| **STILO (2001>2004)** | | | | | | | | | | | |
| 1.2 i 16V | 192/AXA1/BXA1 | E | 1242 | 188A5.000 | M | +/- | | 09/01 ▸ 12/03 | 46799894 | **734228** | 579 325 | ALB |
| 1.6 i 16V | 192/AXB1/BXB1 | E | 1596 | 182B6.000 | M | +/- | | 09/01 ▸ 12/03 | 46766167 | **734228** | 579 325 | ALB |
| 1.6 i 16V | 192CXB1 | E | 1596 | 182B6.000 | M | | | 01/03 ▸ 12/03 | 46766167 | **734228** | 579 325 | ALB |
| 1.8 i 16V | 192/AXC1/BXC1 | E | 1747 | 192A4.000 | M | +/- | | 09/01 ▸ 12/03 | 46745809 | **734229** | 580 400 | ALM |
| 2.4 i 20V | 192/AXD1/BXD1 | E | 2446 | 192A2.000 | M | + | | 09/01 ▸ 12/03 | 46745809 | **734229** | 580 400 | ALM |
| 1.9 JTD | 192/AXE1/AXF1/BXE1 BXF1 | D | 1910 | 192A1.000,192A3.000 | M | +/- | | 09/01 ▸ 12/03 | 46745809 | **734229** | 580 400 | ALM |
| **STILO (2004>)** | | | | | | | | | | | |
| 1.4 i 16V | 192/AXH1/BXH1/CXH1 DXH1 | E | 1368 | 843A1.000 | M | +/- | | 01/04 ▸ 01/08 | 51735217 | **734228** | 579 325 | ALB |
| 1.4 i 16V | 192/AXN1/BXN1 | E | 1368 | 192B2.000 | M | | | 01/04 ▸ 04/07 | 46745809 | **734229** | 580 400 | ALM |
| 1.4 i 16V | 192CXN1 | E | 1368 | 192B2.000 | M | | | 01/04 ▸ 01/08 | 51735217 | **734228** | 579 325 | ALB |
| 1.6 i 16V | 192/AXB1/AXR1/BXB1 CXB1/DXB1 | E | 1596 | 182B6.000,192B3.000 | M | + | | 01/04 ▸ 01/08 | 46745809 | **734229** | 580 400 | ALM |
| 1.6 i 16V | 192/AXB1/AXR1/BXB1 CXB1/DXB1 | E | 1596 | 182B6.000,192B3.000 | M | - | | 01/04 ▸ 01/08 | 51735217 | **734228** | 579 325 | ALB |
| 1.6 i 16V | 192/74X/7JX/CXR1 | E | 1596 | 178E7.000,192B3.000 | M | | | 01/04 ▸ | 51735217 | **734228** | 579 325 | ALB |
| 1.8 16V,1.8 i 16V | 192/AXC1/BXC1/CXE1 | E | 1747 | 192A4.000 | M | +/- | | 01/04 ▸ 01/08 | 46745809 | **734229** | 580 400 | ALM |
| 2.4 i 20V | 192/AXD1/BXD1/CXD1 | E | 2446 | 192A2.000 | M | | | 01/04 ▸ 01/08 | 46745809 | **734229** | 580 400 | ALM |
| 1.9 JTD,1.9 JTD 16V<br>1.9 JTD Multijet<br>1.9 JTD Multijet 16V | 192/3/54/5J8/AXE1 AXF1/AXG1/AXL1/AXM1 AXP1/AXS1/AXT1/BXE1 BXF1/BXG1/BXL1/BXM1/BXP1/CXE1/CXF1/CXG1/CXL1 CXM1/CXP1/CXS1/CXT1/DXE1/DXF1/DXG1 | D | 1910 | 192A1.000,192A3.000,192A5.000 192A8.000,192A9.000,192B1.000 937A4.000,937A5.000 | M | | | 01/04 ▸ 01/08 | 46745809 | **734229** | 580 400 | ALM |
| **STRADA** | | | | | | | | | | | |
| 60 CL | | E | 1116 | 146A4.000 | M | + | | 04/85 ▸ 1988 | 7566878 | | 630 359 | ALM |
| 60 CL | | E | 1116 | 146A4.000 | M | + | | 04/85 ▸ 1988 | 7566879 | | 560 359 | ALM |
| 60 CL | | E | 1116 | 146A4.000 | M | - | | 04/85 ▸ 1988 | 7566875 | | 362 359 | ALM |
| 70 CL | | E | 1301 | 149A7.003 | M | + | | 04/85 ▸ 1988 | 7566879 | | 560 359 | ALM |
| 70 CL | | E | 1301 | 149A7.003 | M | + | | 04/85 ▸ 1988 | 7566878 | | 630 359 | ALM |
| 70 CL | | E | 1301 | 149A7.003 | M | - | TSW | 04/85 ▸ 1988 | 7566876 | **883806** | 417 359 | ALM |
| 85 Super | | E | 1498 | 149A5.000 | M | + | | 04/85 ▸ 1988 | 7566878 | | 630 359 | ALM |
| 85 Super | | E | 1498 | 149A5.000 | M | + | | 04/85 ▸ 1988 | 7566879 | | 560 359 | ALM |
| 85 Super | | E | 1498 | 149A5.000 | M | - | TSW | 04/85 ▸ 1988 | 7566876 | **883806** | 417 359 | ALM |
| 130 TC | | E | 1995 | FIAT04 | M | - | | 04/85 ▸ 1988 | 7032077 | | 445 328 | CBS |
| **TEMPRA** | | | | | | | | | | | |
| 1.4,1.4 ie | 159/AA54/AA55/AC54 | E | 1372 | 159A2.000,160A1.046 | M | + | PIP+ TSW | 11/89 ▸ 02/93 | 7641779 | **811071** | 502 377,5 | ALM |

# FIAT (.../...)

## TEMPRA (.../...)

| Type Ctr. | | CC | | AC | | | OE | Valeo | DIM. | TECH |
|---|---|---|---|---|---|---|---|---|---|---|
| 1.4 ie 159/AC54/AC55/AX54 | E | 1372 | 160A1.046,836A4.000 | M | + | PIP+ TSW | 03/93 ▸ 1996 | 7611159 | **811073** | 558 377,5 ALM |
| 1.4,1.4 ie 159/AA54/AA55/AC54 AC55 ▸ 7193822 | E | 1372 | 159A2.000,160A1.046 | M | - | TSW | > ▸ 02/93 | 7732873 | **811070** | 496 322 ALM |
| 1.4,1.4 ie 159/AA54/AA55/AC54 AC55 | E | 1372 | 159A2.000,160A1.046 | M | - | TSW | 11/89 ▸ 02/93 | 7739073 | **811069** | 378 322 ALM |
| 1.4 ie 159AC55 | E | 1372 | 160A1.046 | M | - | PIP+ TSW | 04/90 ▸ 02/93 | 7641779 | **811071** | 502 377,5 ALM |
| 1.4 ie 159/AC54/AC55/AX54 | E | 1372 | 160A1.046,836A4.000 | M | - | PIP+ TSW | 03/93 ▸ 1996 | 7775153 | **811071** | 502 377,5 ALM |
| 1.4 159/AA54/AA55 ▸ 7193821 | E | 1372 | 159A2.000 | M | - | TSW | 11/89 ▸ | 7666079 | **811070** | 496 322 ALM |
| 1.6,1.6 ie 159/AD54/AD55/AE54 AE55/AS54/AS55/BD54 | E | 1581 | 159A3.000,159A3.046,159A3.048 | M | + | PIP+ TSW | 11/89 ▸ 1996 | 7641779 | **811071** | 502 377,5 ALM |
| 1.6 ie 159/AE54/AE55/AJ54 AJ55/AT54/AT55/AT5C | E | 1581 | 159B9.000,835C1.000 | M | + | PIP+ TSW | 03/93 ▸ 1996 | 7611159 | **811073** | 558 377,5 ALM |
| 1.6,1.6 ie 159/AD54/AD55/AE54 AE55/AS54/AS55/BD54 | E | 1581 | 159A3.000,159A3.046,159A3.048 | M | - | TSW | > ▸ 02/93 | 7732873 | **811070** | 496 322 ALM |
| 1.6,1.6 ie 159/AD54/AS54/AS55 | E | 1581 | 159A3.000,159A3.048 | M | - | TSW | 11/89 ▸ 02/93 | 7739073 | **811069** | 378 322 ALM |
| 1.6 ie 159/AE54/AE55/AJ54 AJ55/AT54/AT55/AT5C | E | 1581 | 159B9.000,835C1.000 | M | - | PIP+ TSW | 03/93 ▸ 1996 | 7775153 | **811071** | 502 377,5 ALM |
| 1.6,1.6 ie 159/AD14/AE14/AE15 | E | 1581 | 159A3.000,159A3.046 | A | + | PIP+ TSW | 11/89 ▸ 02/93 | 7641779 | **811071** | 502 377,5 ALM |
| 1.6 159AD14 | E | 1581 | 159A3.000 | A | + | PIP+ TSW | 04/90 ▸ 02/93 | 7612178 | **811071** | 502 377,5 ALM |
| 1.6 ie 159/AE14/AE15/AS14 | E | 1581 | 159A3.048 | A | + | PIP+ TSW | 04/90 ▸ 1996 | 7611159 | **811073** | 558 377,5 ALM |
| 1.6,1.6 ie 159/AD14/AE14/AE15 AS15 ▸ 7193822 | E | 1581 | 159A3.000,159A3.046,159A3.048 | A | - | TSW | > ▸ 02/93 | 7732873 | **811070** | 496 322 ALM |
| 1.6,1.6 ie 159/AD14/AS14 | E | 1581 | 159A3.000,159A3.048 | A | - | TSW | 04/90 ▸ | 7666079 | **811070** | 496 322 ALM |
| 1.6 ie 159AS15 | E | 1581 | 159A3.048 | A | - | TSW | 04/90 ▸ 02/93 | 7739073 | **811069** | 378 322 ALM |
| 1.6 ie 159/AE14/AE15 | E | 1581 | 159A3.048 | A | - | PIP+ TSW | 03/93 ▸ 1996 | 7775153 | **811071** | 502 377,5 ALM |
| 1.6 ie 159/AS14/AS15 | E | 1581 | 159A3.048 | A | | PIP+ TSW | 04/90 ▸ 02/93 | 7641779 | **811071** | 502 377,5 ALM |
| 1.6 159AD54 ▸ 7193821 | E | 1581 | 159A3.000 | M | - | TSW | 11/89 ▸ | 7666079 | **811070** | 496 322 ALM |
| 1.8 ie,1.8 ie 16V 159/AM54/AM55/AM5C AN54/AN55/AV54/AV55/AZ54/BV54/BV55/BY54/BY55 | E | 1756 | 159A4.000,159A4.046,835C2.000 835C4.000,836A5.000 | M | + | | 11/89 ▸ 1996 | 82440263 | | 554 374 CBS |
| 1.8 ie,1.8 ie 16V 159/AM54/AM55/AM5C AN54/AN55/AV54/AV55/AZ54/BV54/BV55/BY54/BY55 | E | 1756 | 159A4.000,159A4.046,835C2.000 835C4.000,836A5.000 | M | - | PIP+ TSW | 11/89 ▸ 1996 | 7612178 | **811071** | 502 377,5 ALM |
| 1.8 ie 159AZ54 | E | 1756 | 835C4.000 | M | | TSW | 03/93 ▸ 1996 | 7732873 | **811070** | 496 322 ALM |
| 2.0 ie 159/AP54/AP55 | E | 1995 | 159A6.046 | M | + | | 11/89 ▸ 1996 | 82440263 | | 554 374 CBS |
| 2.0 ie 159AP55 | E | 1995 | 159A6.046 | M | + | PIP+ TSW | 02/90 ▸ 02/93 | 7641779 | **811071** | 502 377,5 ALM |
| 2.0 ie 159AP55 | E | 1995 | 159A6.046 | M | + | | 03/92 ▸ 02/93 | 7699793 | | 554 374 CBS |
| 2.0 ie 159/AP54/AP55 | E | 1995 | 159A6.046 | M | - | PIP+ TSW | 11/89 ▸ 1996 | 7612178 | **811071** | 502 377,5 ALM |
| 2.0 ie 159AP55 | E | 1995 | 159A6.046 | M | - | TSW | 02/90 ▸ 02/93 | 7732873 | **811070** | 496 322 ALM |
| 2.0 ie 159AP55 | E | 1995 | 159A6.046 | M | - | | 03/92 ▸ 1996 | 82440263 | | 554 374 CBS |
| 2.0 ie 159/AP14/AP44 | E | 1995 | 159A6.046 | A | + | | 02/90 ▸ 1996 | 82440263 | | 554 374 CBS |
| 2.0 ie 159/AP14/AP44 | E | 1995 | 159A6.046 | A | - | PIP+ TSW | 02/90 ▸ 1996 | 7612178 | **811071** | 502 377,5 ALM |
| 1.9 TD 159/AI54/AI55/AQ54 AQ55/BI54/BI55 ▸ 6073159, 7495870 | D | 1929 | 160A6.000,160D1.000 | M | + | TSW | > ▸ 1996 | 7727204 | **810949** | 554 374,2 ALM |
| 1.9 D,1.9 TD,1.9 TDs 159/AG54/AG55/AG5C AI54/AI55/AI5C/AQ54/AQ55 | D | 1929 | 160A6.000,160A7.000,160B6.046 160D1.000 | M | + | TSW | 11/89 ▸ 1996 | 7610803 | **810949** | 554 374,2 ALM |
| 1.9 TD 159/AI54/AI55/AQ54 AQ55/BI54/BI55 ▸ 6073159, 7495870 | D | 1929 | 160A6.000,160D1.000 | M | - | | > ▸ 1996 | 46404422 | | 554 367 CBS |
| 1.9 D,1.9 TDs 159/AG54/AG55/AG5C AI54/AI55/AI5C/AQ54/AQ55 | D | 1929 | 160A6.000,160A7.000,160B6.046 | M | - | PIP+ TSW | 11/89 ▸ 1996 | 7611159 | **811073** | 558 377,5 ALM |
| 1.9 TD 159/AQ54/AQ55 | D | 1929 | 160D1.000 | M | - | PIP+ TSW | 03/93 ▸ 1996 | 46435656 | **811073** | 558 377,5 ALM |
| 1.9 TDs 159AL | D | 1929 | 160A6.046 | M | | TSW | 11/89 ▸ 02/93 | 7610803 | **810949** | 554 374,2 ALM |

Radiator Radiateur Motorkühler Radiatore di raffreddamento Radiator Radyatör Radiador Радиатор vízhűtő Vodní chladič Radiator Ψυγείο



• **New** Nouveau **Nuevo** Novo **Nuovo** Nieuw **Neu** Nowość **Yeni** Новый Νέο **Novy**

| Type Ctr. | | CC | | AC | | | OE | Valeo | DIM. | TECH |
|---|---|---|---|---|---|---|---|---|---|---|
| **FIAT (.../...)** | | | | | | | | | | |
| **TEMPRA (.../...)** | | | | | | | | | | |
| 1.9 TD 159/AI54/AI55/BI54 BI55 | D | 1929 | 160A6.000 | M | - | TSW | 03/93 ▸ | 7610803 | **810949** | 554 374,2 | ALM |
| **TIPO** | | | | | | | | | | |
| 1.1 160/AA45/AA55 | E | 1108 | 160A3.000 | M | - | TSW | 01/88 ▸ 02/93 | 7739073 | **811069** | 378 322 | ALM |
| 1.4,1.4 ie 160/AB55/AD53/AD55 AU53/AU55/EA53/EA55/EP53/EP55/EP5C | E | 1372 | 159A2.000,160A1.000,160A1.046 836A4.000 | M | + | PIP+ TSW | 01/88 ▸ 10/95 | 7641779 | **811071** | 502 377,5 | ALM |
| 1.4,1.4 ie 160/AB55/AB5C/AD53 AD55/AU53/AU55/AU5C/EA53/EA55/EP53/EP55/EP5C | E | 1372 | 159A2.000,160A1.000,160A1.046 836A4.000 | M | - | TSW | 01/88 ▸ 10/95 | 7732873 | **811070** | 496 322 | ALM |
| 1.4 160AU15 | E | 1372 | 160A1.000 | A | - | TSW | 04/90 ▸ 02/93 | 7732873 | **811070** | 496 322 | ALM |
| 1.6,1.6 ie 160/AE55/AF55/AZ55 B1/BZ55/EB53/EB55/FB55 | E | 1581 | 159A3.000,160A2.,160A2.000 835C1.000 | M | + | PIP+ TSW | 01/88 ▸ 1995 | 7641779 | **811071** | 502 377,5 | ALM |
| 1.6,1.6 ie 160/AE55/AE5C/AF55 AZ55/AZ5C/B1/BZ55/EB53/EB55/FB55 | E | 1581 | 159A3.000,160A2.,160A2.000 835C1.000 | M | - | TSW | 01/88 ▸ 1995 | 7732873 | **811070** | 496 322 | ALM |
| 1.6,1.6 ie 160/AZ15/EC15 | E | 1581 | 159A3.048,160A2.000 | A | + | PIP+ TSW | 01/88 ▸ 1994 | 7641779 | **811071** | 502 377,5 | ALM |
| 1.6,1.6 ie 160/A1/AZ15/EC15 | E | 1581 | 159A3.048,160A2.000 | A | - | TSW | 01/88 ▸ 1994 | 7732873 | **811070** | 496 322 | ALM |
| 1.6 2ACT 160AP55 | E | 1585 | 1602.ACT | M | + | | 07/88 ▸ 02/93 | 82440263 | | 554 374 | CBS |
| 1.6 2ACT 160AP55 | E | 1585 | 1602.ACT | M | - | PIP+ TSW | 07/88 ▸ 02/93 | 7612178 | **811071** | 502 377,5 | ALM |
| 1.8 ie,1.8 ie 16V 160/AM55/AY55/CD53 ED53/ED55/EQ53 | E | 1756 | 159A4.000,159A4.046,835C2.000 836A5.000 | M | + | | 04/89 ▸ 10/95 | 82440263 | | 554 374 | CBS |
| 1.8 ie,1.8 ie 16V 160/AM55/AN55/AY55 CD53/ED53/ED55 | E | 1756 | 159A4.000,159A4.046,160A5.000 835C2.000 | M | - | PIP+ TSW | 04/89 ▸ 1995 | 7612178 | **811071** | 502 377,5 | ALM |
| 2.0 ie 160/AJ/AJ55/AT | E | 1995 | 159A5.046,159A6.046 | M | + | | 06/90 ▸ 1995 | 82440263 | | 554 374 | CBS |
| 2.0 ie 16V 160/AV55/EF53/EF55 GF53 | E | 1995 | 154E1.000,160A8.046,836A3.000 | M | + | | 03/91 ▸ 10/95 | 7699793 | | 554 374 | CBS |
| 2.0 ie 160/AJ/AJ55/AT | E | 1995 | 159A5.046,159A6.046 | M | - | PIP+ TSW | 06/90 ▸ 1995 | 7612178 | **811071** | 502 377,5 | ALM |
| 2.0 ie 16V 160/AV55/EF53/EF55 GF53 | E | 1995 | 154E1.000,160A8.046,836A3.000 | M | - | | 03/91 ▸ 10/95 | 82440263 | | 554 374 | CBS |
| 2.0 ie 160/AJ/AJ54/AT | E | 1995 | 159A5.046,159A6.046 | A | + | | 06/90 ▸ 1995 | 82440263 | | 554 374 | CBS |
| 2.0 ie 160/AJ/AJ54/AT | E | 1995 | 159A5.046,159A6.046 | A | - | PIP+ TSW | 06/90 ▸ 1995 | 7612178 | **811071** | 502 377,5 | ALM |
| 1.7 D 160AG55 | D | 1697 | 149B4.000 | M | + | TSW | 01/88 ▸ 02/93 | 7610803 | **810949** | 554 374,2 | ALM |
| 1.7 D 160/AG55/AG5C/EG53/EG55/EG5C | D | 1697 | 149B4.000 | M | - | PIP+ TSW | 01/88 ▸ 1995 | 7611159 | **811073** | 558 377,5 | ALM |
| 1.9 D,1.9 TD,1.9 TDs 160/AQ55/AQ5C/AR55 AW55/EH55/EI55/EL55 | D | 1929 | 160A6.000,160A6.046,160A7.000 160B6.046,160D1.000 | M | + | TSW | 01/88 ▸ 1995 | 7727204 | **810949** | 554 374,2 | ALM |
| 1.9 D,1.9 TDs 160/AH55/AQ5C | D | 1929 | 160A6.000,160A7.000 | M | + | TSW | 07/89 ▸ 02/93 | 7610803 | **810949** | 554 374,2 | ALM |
| 1.9 TD,1.9 TDs 160/AQ55/AR55/AW55 EI53/EI55/EL55 | D | 1929 | 160A6.000,160A6.046,160B6.046 160D1.000 | M | - | TSW | 01/88 ▸ 02/94 | 7610803 | **810949** | 554 374,2 | ALM |
| 1.9 D 160/AH55/EH55 | D | 1929 | 160A7.000 | M | - | PIP+ TSW | 10/89 ▸ 1995 | 7611159 | **811073** | 558 377,5 | ALM |
| 1.9 TD 160/EI53/EI55/EL55 | D | 1929 | 160A6.000,160D1.000 | M | - | | 03/94 ▸ 1995 | 46404422 | | 554 367 | CBS |
| **ULYSSE (94>98)** | | | | | | | | | | |
| 1.8 ie 220BB5 | E | 1761 | LFW | M | + | TSW | 03/96 ▸ 09/98 | 1473910080 | **731166** | 670 470 | ALM |
| 1.8 ie 220/BB5/BB5U | E | 1761 | LFW | M | - | VCAP TSW | 03/96 ▸ 09/98 | 1471463080 | **731165** | 600 470 | ALM |
| 2.0 ie Turbo 220AD5 | E | 1998 | RGX | M | + | TSW | 06/94 ▸ 06/96 | 1474401080 | **731166** | 670 470 | ALM |
| 2.0 ie Turbo 220/AD5/CD5 | E | 1998 | RGX | M | + | TSW | 06/94 ▸ 09/98 | 1475060080 | **731166** | 670 470 | ALM |
| 2.0 ie 220AC5 | E | 1998 | RFU | M | + | TSW | 06/94 ▸ 09/98 | 1473910080 | **731166** | 670 470 | ALM |
| 2.0 ie 220/AC5/AC5U | E | 1998 | RFU | M | - | VCAP TSW | 06/94 ▸ 09/98 | 1471463080 | **731165** | 600 470 | ALM |
| 2.0 ie Turbo 220CD5 | E | 1998 | RGX | M | - | TSW | 07/96 ▸ 09/98 | 1474401080 | **731166** | 670 470 | ALM |
| 1.9 TD 220/AE5/AH5/AHX | D | 1905 | XUD9TE/XUD9TEF/KXUD9TEF/L3 | M | + | TSW | 06/94 ▸ 09/98 | 1475845080 | **731168** | 670 470 | ALM |
| 1.9 TD 220/AE5/AE5U/AH5/AHX | D | 1905 | XUD9TE/XUD9TEF/KXUD9TEF/L3 | M | - | TSW | 06/94 ▸ 09/98 | 1475844080 | **731168** | 670 470 | ALM |
| 2.1 TD 220AJ5 | D | 2088 | P8C | M | + | TSW | 03/96 ▸ 09/98 | 1475845080 | **731168** | 670 470 | ALM |
| 2.1 TD 220/AJ5/AJ5U | D | 2088 | P8C | M | - | TSW | 03/96 ▸ 09/98 | 1475844080 | **731168** | 670 470 | ALM |
| **ULYSSE (98>2002)** | | | | | | | | | | |
| 1.8 ie 220BB5 | E | 1761 | LFW | M | + | TSW | 10/98 ▸ 08/02 | 1473910080 | **731166** | 670 470 | ALM |
| 1.8 ie 220BB5 | E | 1761 | LFW | M | - | VCAP TSW | 10/98 ▸ 08/02 | 1485799080 | **731165** | 600 470 | ALM |
| 1.8 ie 220BB5 | E | 1761 | LFW | M | - | VCAP TSW | 10/98 ▸ 05/99 | 1471463080 | **731165** | 600 470 | ALM |
| 2.0 ie 16V 220AQ5 | E | 1997 | EW10J4 | M | + | TSW | 10/98 ▸ 08/02 | 1473910080 | **731166** | 670 470 | ALM |

# FIAT (.../...)

## ULYSSE (98>2002) (.../...)

| | | | CC | | | AC | | | OE | Valeo | DIM. | | TECH |
|---|---|---|---|---|---|---|---|---|---|---|---|---|---|
| 2.0 ie 16V 8575 ▸ | 220AQ5 | E | 1997 | EW10J4 | M | + | TSW | 05/00 ▸ 08/02 | 1475060080 | **731166** | 670 | 470 | ALM |
| 2.0 ie 16V | 220AQ5 | E | 1997 | EW10J4 | M | - | VCAP TSW | 10/98 ▸ 08/02 | 1485799080 | **731165** | 600 | 470 | ALM |
| 2.0 ie 16V | 220AQ5 | E | 1997 | EW10J4 | A | +/- | TSW | 10/98 ▸ 08/02 | 1475060080 | **731166** | 670 | 470 | ALM |
| 2.0 ie 16V | 220AQ5 | E | 1997 | EW10J4 | A | + | TSW | 10/98 ▸ 08/02 | 1473910080 | **731166** | 670 | 470 | ALM |
| 2.0 ie 16V | 220AQ5 | E | 1997 | EW10J4 | A | - | VCAP TSW | 10/98 ▸ 08/02 | 1485799080 | **731165** | 600 | 470 | ALM |
| 2.0 ie,2.0 ie 16V | 220/AC5/AL5/AV5 | E | 1998 | RFU,RFV | M | + | TSW | 10/98 ▸ 08/02 | 1473910080 | **731166** | 670 | 470 | ALM |
| 2.0 ie Turbo | 220CD5 | E | 1998 | RGX | M | + | TSW | 10/98 ▸ | 1474401080 | **731166** | 670 | 470 | ALM |
| 2.0 ie,2.0 ie 16V | 220/AC5/AL5/AV5 | E | 1998 | RFU,RFV | M | - | VCAP TSW | 10/98 ▸ 05/99 | 1471463080 | **731165** | 600 | 470 | ALM |
| 2.0 ie,2.0 ie 16V | 220/AC5/AL5/AV5 | E | 1998 | RFU,RFV | M | - | VCAP TSW | 10/98 ▸ 08/02 | 1485799080 | **731165** | 600 | 470 | ALM |
| 2.0 ie Turbo | 220/AD5/CD5 | E | 1998 | RGX | M | | TSW | 10/98 ▸ 08/02 | 1489463080 | **732692** | 669 | 470 | ALB |
| 2.0 ie Turbo ▸ 8578 | 220/AD5/CD5 | E | 1998 | RGX | M | +/- | TSW | 10/98 ▸ 05/00 | 1475060080 | **731166** | 670 | 470 | ALM |
| 1.9 TD | 220/AE5/AHX | D | 1905 | XUD9TEF/K,XUD9TEF/L3 | M | + | TSW | 10/98 ▸ 08/02 | 1475845080 | **731168** | 670 | 470 | ALM |
| 1.9 TD | 220/AH5/AHX | D | 1905 | XUD9TEF/L3 | M | + | TSW | 10/98 ▸ 08/02 | 1475060080 | **731166** | 670 | 470 | ALM |
| 1.9 TD | 220/AE5/AH5/AHX | D | 1905 | XUD9TEF/K,XUD9TEF/L3 | M | - | TSW | 10/98 ▸ 08/02 | 1475844080 | **731168** | 670 | 470 | ALM |
| 1.9 TD | 220AH5 | D | 1905 | XUD9TEF/L3 | M | - | TSW | 10/98 ▸ 08/02 | 1475845080 | **731168** | 670 | 470 | ALM |
| 2.0 JTD | 220AN5 | D | 1997 | DW10BTED+L4 | M | +/- | TSW | 10/99 ▸ | 1482543080 | **732692** | 669 | 470 | ALB |
| 2.0 JTD | 220AN5 | D | 1997 | DW10BTED+L4 | M | +/- | TSW | 10/99 ▸ 08/02 | 1489463080 | **732692** | 669 | 470 | ALB |
| 2.0 JTD 16V | 220AR50 | D | 1997 | DW10ATED4 | M | | TSW | 10/99 ▸ 08/02 | 1489463080 | **732692** | 669 | 470 | ALB |
| 2.1 TD | 220AJ5 | D | 2088 | P8C | M | + | TSW | 10/98 ▸ 08/02 | 1475845080 | **731168** | 670 | 470 | ALM |
| 2.1 TD | 220AJ5 | D | 2088 | P8C | M | - | TSW | 10/98 ▸ 08/02 | 1475844080 | **731168** | 670 | 470 | ALM |

## ULYSSE (2002>)

| | | | | | | | | | | | | | |
|---|---|---|---|---|---|---|---|---|---|---|---|---|---|
| 2.0 i 16V | 179BXA1 | E | 1997 | EW10J4 | M | + | | 09/02 ▸ 10/05 | 9641728080 | **732830** | 465 | 551,3 | ALM |
| 2.0 i 16V | 179BXA1 | E | 1997 | EW10J4 | A | + | | 09/02 ▸ | 9641728180 | **732880** | 464 | 562,8 | ALB |
| 2.0 JTD 16V | 179/BXB1/CXB1 | D | 1997 | DW10ATED4 | M | | | 09/02 ▸ 07/06 | 9641728380 | **732881** | 464 | 562,8 | ALB |
| 2.0 JTD 16V | 179BXF1 | D | 1997 | DW10ATED4 | A | | | 03/03 ▸ 10/06 | 9641728380 | **732881** | 464 | 562,8 | ALB |
| 2.2 JTD 16V | 179/BXC1/CXC1 | D | 2179 | DW12ATED4/L4 | M | | | 09/02 ▸ 06/06 | 9641728380 | **732881** | 464 | 562,8 | ALB |

## UNO (83>89)

| | | | | | | | | | | | | | |
|---|---|---|---|---|---|---|---|---|---|---|---|---|---|
| 55 | 146AD45 | G | 1116 | 138B.000-G | M | - | TSW | 04/83 ▸ 11/85 | 7739942 | **883812** | 388 | 322 | ALM |
| 45,45 ES,45 Pop | 146/AA43/AA45/AA53 AA55/AB53/AB55/CD43/CD45/CD53/CD55 16CD4CT ; 14A/A4AC/A5AC/B5AC | E | 903 | 146A.000,146A1.000 | M | - | FL+ | 01/83 ▸ 10/89 | 7556134 | | 305 | 322 | ALM |
| 45,45 ES,45 Pop | 146/AA43/AA45/AA53 AA55/AB53/AB55/CD43/CD45/CD53/CD55 16CD4CT ; 14A/A4AC/A5AC/B5AC | E | 903 | 146A.000,146A1.000 | M | - | TSW | 01/83 ▸ 10/89 | 7739938 | **883811** | 304 | 322 | ALM |
| 45,45 S | 146/AQ43/AQ45/AQ4A AQ4C/AQ53/AQ55/AQ5A ; 16A/Q4CT/Q5CT | E | 999 | 156A2.000 | M | - | TSW | 10/85 ▸ 10/89 | 7739941 | **811385** | 341 | 322 | ALM |
| 55,55 S,60,60 S,SL | 14AD5AC ; 146/AD43 AD45/AD53/AD55/AJ43/AJ45/AJ4C/AJ53/AJ55 AJ5A ; 16A/J4CT/J5CT | E | 1116 | 138B.000,146A4.000 | M | - | TSW | 04/83 ▸ 10/89 | 7739942 | **883812** | 388 | 322 | ALM |
| 60 Selecta | 146/AJ13/AJ15 | E | 1116 | 146A4.000 | A | - | TSW | 10/87 ▸ 1989 | 7739942 | **883812** | 388 | 322 | ALM |
| 70,70 S,70 SL,70 SX | 16AR5CT ; 146/AE53 AE55/AE5A/AR53/AR55/AR5A/BE53/BE55/BE5A | E | 1301 | 138B2.000 | M | - | FL+ | 04/83 ▸ 1989 | 7739936 | | 441 | 322 | ALM |
| 70,70 S | 16AR5CT ; 146/AE53 AE55/AE5A | E | 1301 | 138B2.000 | M | - | TSW | 04/83 ▸ 1989 | 7739937 | **883813** | 441 | 322 | ALM |
| - | 146/AM53/AM55/BM53 | E | 1301 | 146A2.000 | M | - | TSW | 03/85 ▸ 1989 | 50005580 | **811387** | 519 | 307 | ALB |
| 75 ie | | E | 1498 | 138C2.048 | M | - | TSW | 1986 ▸ 1989 | 7739937 | **883813** | 441 | 322 | ALM |
| - | 146/AG53/AG55/AG5A | D | 1301 | 127A5.000 | M | - | TSW 819775 | 05/83 ▸ 1986 | 7678729 | **883825** | 520 | 322 | ALM |
| - | 16A65CT ; 146/A653/A655 | D | 1367 | 146B3.000 | M | - | TSW 819775 | 04/86 ▸ 1989 | 7570382 | **•810924** | 605 | 295 | ALB |
| 60 | 146/AF53/AF55 | D | 1697 | 149B3.000 | M | - | TSW | 10/85 ▸ 1989 | 7570382 | **•810924** | 605 | 295 | ALB |

## UNO (89>95)

| | | | | | | | | | | | | | |
|---|---|---|---|---|---|---|---|---|---|---|---|---|---|
| Pop | 146/EA43/EA53/EA55 | E | 903 | 146A.048 | M | - | TSW | 10/89 ▸ 09/92 | 7739938 | **883811** | 304 | 322 | ALM |
| Pop | 146/EA43/EA53/EA55 | E | 903 | 146A.048 | M | - | FL+ | 10/89 ▸ 09/92 | 7556134 | | 305 | 322 | ALM |
| Sting,Trend | 146/EB53/EB55 | E | 994 | 146B4.000 | M | - | TSW | 10/89 ▸ 12/93 | 7739941 | **811385** | 341 | 322 | ALM |
| 45,45 S | 146/EC43/EC45/EC4C EC53/EC55/EC5C/ED53/ED55/EE53/EE55 | E | 999 | 156A2.000,156A2.100,156A2.246 | M | - | TSW | 10/89 ▸ 12/93 | 7739941 | **811385** | 341 | 322 | ALM |
| 60 S,S | 146/EF53/EF55/ET53 ET55 | E | 1108 | 156C.046,160A3.000 | M | - | TSW | 10/89 ▸ 12/93 | 7739942 | **883812** | 388 | 322 | ALM |
| 60,Trend | 146/EF5C/EG53/EJ55 | E | 1116 | 146A4.000,146A6.000 | M | - | TSW | 10/89 ▸ 12/92 | 7739942 | **883812** | 388 | 322 | ALM |
| 60 | 146/EG13/EG1C | E | 1116 | 146A4.000 | A | - | TSW | 07/90 ▸ 12/92 | 7739942 | **883812** | 388 | 322 | ALM |
| - | 146EQ53 | E | 1301 | 146A2.000 | M | - | TSW | 10/89 ▸ 03/91 | 50005580 | **811387** | 519 | 307 | ALB |
| - | 146EQ | E | 1301 | 146A2.246 | M | | TSW | 10/89 ▸ 03/91 | 50005580 | **811387** | 519 | 307 | ALB |

Radiator Radiateur Motorkühler Radiatore di raffreddamento Radiator Radyatör Radiador Радиатор vízhűtő Vodní chladič Radiator Ψυγείο



• **New** Nouveau **Nuevo** Novo **Nuovo** Nieuw **Neu** Nowość **Yeni** Новый Νέο **Nový**

| Type Ctr. | | CC | | AC | | | OE | Valeo | DIM. | TECH |
|---|---|---|---|---|---|---|---|---|---|---|
| **FIAT (.../...)** | | | | | | | | | | |
| **UNO (89>95) (.../...)** | | | | | | | | | | |
| 70,70 SX,70S 146/EH53/EH55/EI EI53/EI55/EK55/EL53/EL55 | E | 1372 | 146C1.000,146C1.046,146C2.028 160A1.046,160A1.048 | M | - | TSW | > ▸ 12/93 | 7739937 | **883813** | 441 322 | ALM |
| - 146/ER53/EU53 | E | 1372 | 146A8.000,146A8.046 | M | - | TSW | 10/89 ▸ 09/93 | 50005580 | **811387** | 519 307 | ALB |
| 70,70S 146/EL53/EL55 ▸ 0883017 | E | 1372 | 160A1.048 | M | | TSW | > ▸ 10/92 | 7739937 | **883813** | 441 322 | ALM |
| 70,70S 146/EL53/EL55 ▸ 0883016 | E | 1372 | 160A1.048 | M | | FL+ | 10/89 ▸ | 7739936 | | 441 322 | ALM |
| 75S,75SX 146/EM53/EM55 | E | 1498 | 149C1.000 | M | - | TSW | 10/89 ▸ 12/93 | 7739937 | **883813** | 441 322 | ALM |
| - 146/EM13/EM15 | E | 1498 | 149C1.000 | A | - | TSW | 10/89 ▸ 12/93 | 7739937 | **883813** | 441 322 | ALM |
| 45 146/EN53/EN55 | D | 1301 | 146B1.000 | M | - | TSW 819775 | 10/89 ▸ 03/92 | 7678729 | **883825** | 520 322 | ALM |
| 70,70 S 146/ES53/ES55/ES5C | D | 1367 | 146B3.000 | M | - | TSW 819775 | 10/89 ▸ 07/93 | 7570382 | **•810924** | 605 295 | ALB |
| 60 146/EO53/EO55 | D | 1697 | 146B2.000 | M | + | TSW | 10/89 ▸ 08/95 | 46519780 | **•810924** | 605 295 | ALB |
| 60 146EO55 | D | 1697 | 146B2.000 | M | + | TSW | 10/89 ▸ 08/95 | 7570382 | **•810924** | 605 295 | ALB |
| - 146/EO5C/EO53 | D | 1697 | 146B2.000,149B3.000 | M | - | TSW | 10/89 ▸ 08/95 | 7570382 | **•810924** | 605 295 | ALB |
| - 146/EP53/EP55 | D | 1929 | 149B5.046 | M | - | TSW | 07/90 ▸ 03/94 | 7570382 | **•810924** | 605 295 | ALB |
| **UNO CS (87>)** | | | | | | | | | | |
| - 146/A753/A75C | E | 1116 | 146A6.000 | M | - | TSW | 10/87 ▸ 12/95 | 7652127 | **730990** | 441 322 | ALM |
| 60 16AF5CT ; 146/A755/AF5A | D | 1697 | 146B2.000,149B3.000 | M | - | TSW | 10/87 ▸ 1993 | 7570382 | **•810924** | 605 295 | ALB |
| - 146/.785/.790/.795/A | | - | | M | - | TSW | 08/88 ▸ | 50005580 | **811387** | 519 307 | ALB |
| - 146/.783/.784/.793/.794 | | - | | M | - | TSW | 05/97 ▸ | 7570382 | **•810924** | 605 295 | ALB |
| **UNO MONDO (98>)** | | | | | | | | | | |
| 1.0 i 146EE55 | E | 999 | 156A2.246 | M | | TSW | 01/98 ▸ | 7739941 | **811385** | 341 322 | ALM |
| 1.1 146052 ; 158350 | E | 1108 | 160A3.000 | M | | TSW | 01/98 ▸ | 7739942 | **883812** | 388 322 | ALM |
| 1.7 D 158351 ; 146E055 ; 146/E0 | D | 1697 | 146B2.000 | M | - | TSW | 01/98 ▸ | 7570382 | **•810924** | 605 295 | ALB |
| 1.7 D 146E055 | D | 1697 | 146B2.000 | M | + | TSW | 01/98 ▸ | 46519780 | **•810924** | 605 295 | ALB |
| **FIAT** | | | | | | | | | | |
| **DOBLO (2000>2003)** | | | | | | | | | | |
| 1.2 i 223AXA1 | E | 1242 | 223A5.000 | M | + | | 10/00 ▸ 12/03 | 46803031 | **735172** | 580 322 | ALM |
| 1.2 i 223AXA1 | E | 1242 | 223A5.000 | M | + | | 10/00 ▸ 12/03 | 46803039 | **735171** | 640 414,5 | ALM |
| 1.2 i 223AXA1 | E | 1242 | 223A5.000 | M | - | | 10/00 ▸ 12/03 | 46803028 | **735172** | 580 322 | ALM |
| 1.6 i 16V 223AXD1 | E | 1596 | 182B6.000 | M | + | | 10/01 ▸ 12/03 | 46803035 | **735171** | 640 414,5 | ALM |
| 1.6 i 16V 223AXD1 | E | 1596 | 182B6.000 | M | - | | 10/01 ▸ 12/03 | 46803039 | **735171** | 640 414,5 | ALM |
| 1.9 DS 223AXB1 | D | 1910 | 223A6.000 | M | + | | 10/00 ▸ 12/03 | 46803035 | **735171** | 640 414,5 | ALM |
| 1.9 DS 223AXB1 | D | 1910 | 223A6.000 | M | - | | 10/00 ▸ 12/03 | 46803039 | **735171** | 640 414,5 | ALM |
| 1.9 JTD 223AXE1 | D | 1910 | 182B9.000 | M | | | 10/01 ▸ 12/03 | 46803039 | **735171** | 640 414,5 | ALM |
| 1.9 JTD 223AXE1 | D | 1910 | 182B9.000 | M | | | 10/01 ▸ 12/03 | 46807378 | **734692** | 730 305,4 | ALM |
| **DOBLO (2004>2005)** | | | | | | | | | | |
| 1.2 i 223AXA1 | E | 1242 | 223A5.000 | M | + | | 01/04 ▸ 12/05 | 46803039 | **735171** | 640 414,5 | ALM |
| 1.2 i 223AXA1 | E | 1242 | 223A5.000 | M | + | | 01/04 ▸ 12/05 | 46803031 | **735172** | 580 322 | ALM |
| 1.2 i 223AXA1 | E | 1242 | 223A5.000 | M | - | | 01/04 ▸ 12/05 | 46803028 | **735172** | 580 322 | ALM |
| 1.6 i 16V,1.6 i GNV 16V 223AXD1 | E | 1596 | 182B6.000 | M | + | | 01/04 ▸ 12/05 | 46803035 | **735171** | 640 414,5 | ALM |
| 1.6 i 16V,1.6 i GNV 16V 223AXD1 | E | 1596 | 182B6.000 | M | - | | 01/04 ▸ 12/05 | 46803039 | **735171** | 640 414,5 | ALM |
| 1.3 MTJ 16V 223AXG1 | D | 1248 | 188A9.000 | M | +/- | | 01/04 ▸ 12/05 | 46807378 | **734692** | 730 305,4 | ALM |
| 1.9 DS 223ZXB1 | D | 1910 | 223A6.000 | M | + | | 01/04 ▸ 12/05 | 46803035 | **735171** | 640 414,5 | ALM |
| 1.9 DS 223ZXB1 | D | 1910 | 223A6.000 | M | - | | 01/04 ▸ 12/05 | 46803039 | **735171** | 640 414,5 | ALM |
| 1.9 JTD 223WXF1 | D | 1910 | 223A7.000 | M | | | 09/05 ▸ 12/05 | 46807378 | **734692** | 730 305,4 | ALM |
| **DOBLO II (2006>)** | | | | | | | | | | |
| 1.4 i 8V 223AXP1 | E | 1368 | 350A1.000 | M | + | | 01/06 ▸ | 46803035 | **735171** | 640 414,5 | ALM |
| 1.4 i 8V 223AXP1 | E | 1368 | 350A1.000 | M | - | | 01/06 ▸ | 46803039 | **735171** | 640 414,5 | ALM |
| 1.6 i GNV 16V 223AXD1 | E | 1596 | 182B6.000 | M | + | | 01/06 ▸ | 46803035 | **735171** | 640 414,5 | ALM |
| 1.6 i GNV 16V 223AXD1 | E | 1596 | 182B6.000 | M | - | | 01/06 ▸ | 46803039 | **735171** | 640 414,5 | ALM |
| 1.3 MJTD 16V 223AXN1 | D | 1248 | 199A9.000 | M | +/- | | 01/06 ▸ | 46807378 | **734692** | 730 305,4 | ALM |
| 1.9 MJTD 8V 223/AXH1/AXL1 | D | 1910 | 186A9.000,223B1.000 | M | +/- | | 01/06 ▸ | 46807378 | **734692** | 730 305,4 | ALM |
| **DOBLO CARGO (2000>2003)** | | | | | | | | | | |
| 1.2 i 223ZXA1 | E | 1242 | 223A5.000 | M | + | | 10/00 ▸ 12/03 | 46803031 | **735172** | 580 322 | ALM |
| 1.2 i 223ZXA1 | E | 1242 | 223A5.000 | M | - | | 10/00 ▸ 12/03 | 46803028 | **735172** | 580 322 | ALM |
| 1.6 i 16V 223ZXD1 | E | 1596 | 182B6.000 | M | + | | 10/01 ▸ 12/03 | 46803035 | **735171** | 640 414,5 | ALM |
| 1.6 i 16V 223ZXD1 | E | 1596 | 182B6.000 | M | + | | 10/01 ▸ 12/03 | 46803031 | **735172** | 580 322 | ALM |
| 1.6 i 16V 223ZXD1 | E | 1596 | 182B6.000 | M | - | | 10/01 ▸ 12/03 | 46803039 | **735171** | 640 414,5 | ALM |
| 1.6 i 16V 223ZXD1 | E | 1596 | 182B6.000 | M | - | | 10/01 ▸ 12/03 | 46803028 | **735172** | 580 322 | ALM |
| 1.9 JTD 223/AXE1/ZXE1 | D | 1910 | 182B9.000 | M | +/- | | 10/01 ▸ 12/03 | 46807378 | **734692** | 730 305,4 | ALM |
| 1.9 DS 223/AXB1/ZXB1 | D | 1910 | 223A6.000 | M | + | | 10/00 ▸ 12/03 | 46803035 | **735171** | 640 414,5 | ALM |

# FIAT (.../...)

## DOBLO CARGO (2000>2003) (.../...)

| | | | CC | | | AC | | | OE | Valeo | DIM. | TECH |
|---|---|---|---|---|---|---|---|---|---|---|---|---|
| 1.9 DS | 223/AXB1/ZXB1 | D | 1910 | 223A6.000 | M | - | | 10/00 ▸ 12/03 | 46803039 | **735171** | 640 414,5 | ALM |

## DOBLO CARGO (2004>2005)

| | | | | | | | | | | | | |
|---|---|---|---|---|---|---|---|---|---|---|---|---|
| 1.6 i GNV | 223WXD1 | G | 1596 | 182B6.000-GNV | M | + | | 01/04 ▸ 12/05 | 46803035 | **735171** | 640 414,5 | ALM |
| 1.6 i GNV | 223WXD1 | G | 1596 | 182B6.000-GNV | M | - | | 01/04 ▸ 12/05 | 46803039 | **735171** | 640 414,5 | ALM |
| 1.2 i | 223ZXA1 | E | 1242 | 223A5.000 | M | + | | 01/04 ▸ 12/05 | 46803031 | **735172** | 580 322 | ALM |
| 1.2 i | 223ZXA1 | E | 1242 | 223A5.000 | M | - | | 01/04 ▸ 12/05 | 46803028 | **735172** | 580 322 | ALM |
| 1.3 MTJ 16V | 223/AXG1/WXG1/ZXG1 | D | 1248 | 188A9.000 | M | | | 01/04 ▸ 12/05 | 46807378 | **734692** | 730 305,4 | ALM |
| 1.9 JTD | 223/AXF1/WXF1/ZXF1 | D | 1910 | 182B9.000 | M | +/- | | 01/04 ▸ 08/05 | 46807378 | **734692** | 730 305,4 | ALM |
| 1.9 DS | 223ZXB1 | D | 1910 | 223A6.000 | M | + | | 01/04 ▸ 12/05 | 46803035 | **735171** | 640 414,5 | ALM |
| 1.9 DS | 223ZXB1 | D | 1910 | 223A6.000 | M | - | | 01/04 ▸ 12/05 | 46803039 | **735171** | 640 414,5 | ALM |
| 1.9 JTD | 223/AXF1/WXF1/ZXF1 | D | 1910 | 223A7.000 | M | | | 09/05 ▸ 12/05 | 46807378 | **734692** | 730 305,4 | ALM |

## DOBLO CARGO II (2006>)

| | | | | | | | | | | | | |
|---|---|---|---|---|---|---|---|---|---|---|---|---|
| 1.6 i GNV | 223WXD1 | G | 1596 | 182B6.000-GNV | M | + | | 01/06 ▸ | 46803035 | **735171** | 640 414,5 | ALM |
| 1.6 i GNV | 223WXD1 | G | 1596 | 182B6.000-GNV | M | - | | 01/06 ▸ | 46803039 | **735171** | 640 414,5 | ALM |
| 1.4 i | 223/WXP1/ZXP1 | E | 1368 | 350A1.000 | M | + | | 01/06 ▸ | 46803035 | **735171** | 640 414,5 | ALM |
| 1.4 i | 223/WXP1/ZXP1 | E | 1368 | 350A1.000 | M | - | | 01/06 ▸ | 46803039 | **735171** | 640 414,5 | ALM |
| 1.3 MJTD 16V | 223/WXN1/ZXN1 | D | 1248 | 199A9.000 | M | +/- | | 01/06 ▸ | 46807378 | **734692** | 730 305,4 | ALM |
| 1.9 MJTD | 223/WXL1/WXR1/ZXR1 | D | 1910 | 223B2.000 | M | +/- | | 01/06 ▸ | 46807378 | **734692** | 730 305,4 | ALM |

## DUCATO (81>94)

| | | | | | | | | | | | | |
|---|---|---|---|---|---|---|---|---|---|---|---|---|
| 1.8 | 280 | E | 1796 | 169B | M | | TSW | 11/81 ▸ 06/90 | 7555802 | **811380** | 663 414 | ALM |
| 1.8 ▸ 0259379 | 280 | E | 1796 | 169B | M | - | TSW | 11/81 ▸ | 5969174 | •**883764** | 663 414 | ALM |
| 2.0 | 280 | E | 1971 | 170B | M | - | TSW | 06/85 ▸ 06/90 | 7555802 | **811380** | 663 414 | ALM |
| 2.0 ▸ 0259379 | 280 | E | 1971 | 170B | M | - | TSW | 11/81 ▸ | 5969174 | •**883764** | 663 414 | ALM |
| 1.9 D | 280 | D | 1929 | 149B1.000 | M | - | TSW | 10/87 ▸ 06/90 | 5969172 | **883765** | 825 414 | ALM |
| 1.9 TD | 280 | D | 1929 | 149B2.000 | M | - | TSW | 10/87 ▸ 06/90 | 5981189 | **730040** | 663 414,5 | ALM |
| 1.9 D | 280 | D | 1929 | 149B1.000 | M | | TSW | 10/87 ▸ 06/90 | 7707251 | **883765** | 825 414 | ALM |
| 2.5 D,2.5 TD | 280 | D | 2445 | 8144-21,8144-61 | M | - | TSW | 06/85 ▸ 06/90 | 7707251 | **883765** | 825 414 | ALM |
| 2.5 D | 280 | D | 2445 | 8144-61 | M | - | TSW | 06/85 ▸ 06/90 | 5981189 | **730040** | 663 414,5 | ALM |
| 2.5 D | 280 | D | 2445 | 8144-61 | M | | TSW | 11/81 ▸ 05/85 | 7707251 | **883765** | 825 414 | ALM |
| 2.5 D,2.5 TD | 280 | D | 2445 | 8144-21,8144-61 | M | | TSW | 11/81 ▸ 06/90 | 71735365 | **883765** | 825 414 | ALM |
| 2.5 D | 280 | D | 2500 | CRD93 | M | - | TSW | 11/81 ▸ 06/90 | 7707251 | **883765** | 825 414 | ALM |
| 2.5 D | 280 | D | 2500 | CRD93 | M | - | TSW | 06/85 ▸ 06/90 | 5981189 | **730040** | 663 414,5 | ALM |
| 2.5 D | 280 | D | 2500 | CRD93 | M | | TSW | 11/81 ▸ 06/90 | 71735365 | **883765** | 825 414 | ALM |

## DUCATO (90>94)

| | | | | | | | | | | | | |
|---|---|---|---|---|---|---|---|---|---|---|---|---|
| 2.0 | 290/A4A/AY/B14/B4/BY/BYW/D4/DY/EH4/EHY/EHYW EP4/EPM4/EPMY/EPY/GB4/HT4/MA4A/MAY/MAYW/MT4 MTY/MTYW/MZY/NA4/NAPY/NAY/NLY/NT4/NTPY/NTY NZY | E | 1971 | 170B,170D-U8 | M | | TSW | 07/90 ▸ 01/94 | 7555802 | **811380** | 663 414 | ALM |
| 1.9 D,1.9 TD | 290/AK/AX1/BX/DX/EHK EHX/EPMX/EPX/GBX/MAK/MAX/MTX/MZX/NAPX/NAX NTX/PAX | D | 1929 | 149B1.000,280A1.000 | M | | TSW | 07/90 ▸ 01/94 | 71735365 | **883765** | 825 414 | ALM |
| 2.5 TD | 290/BJ/BJW/DJ/EHJ EHJW/EPJ/EPMJ/GBJ/MAJ/MAJW/MTJ/MTJW/MZJ/NAJ NTJ/PAJ | D | 2499 | 8140-27 | M | | TSW | 07/90 ▸ 01/94 | 71735365 | **883765** | 825 414 | ALM |
| 2.5 D | 290/B7/B7W/D7/EH7W/EM7/EP7/GB7/MA7W/MT7/MT7W MZ7/NA7/NT7/PA7 | D | 2500 | 8144-67 | M | | TSW | 07/90 ▸ 01/94 | 71735365 | **883765** | 825 414 | ALM |

## DUCATO (230) (94>2001)

| | | | | | | | | | | | | |
|---|---|---|---|---|---|---|---|---|---|---|---|---|
| 2.0 | 230/AHMF/AHMP | E | 1998 | XU102CU | M | +/- | TSW | 02/94 ▸ 12/01 | 1307393080 | **730995** | 700 414,5 | CBS |
| 2.0 i | 230/AGMF/AGMP/AGMS/AGMT/AGMU/AGWT/BGMA/BGMC BGMD/BGMF/BGMH/BGMN/BGMP/BGMQ/BGMS/BGWN/BGWS BGWT/CGMA/CGMC/CGMD/CGMF/CGMH/CGMM/CGMN | E | 1998 | XU10J2U | M | + | TSW | 02/94 ▸ 12/01 | 1307391080 | **731611** | 790 414,5 | ALM |
| 2.0 i | 230/AGMF/AGMP/AGMS/AGMT/AGMU/AGWT/BGMA/BGMC BGMD/BGMF/BGMH/BGMN/BGMP/BGMQ/BGMS/BGWN/BGWS BGWT/CGMA/CGMC/CGMD/CGMF/CGMH/CGMM/CGMN | E | 1998 | XU10J2U | M | - | TSW | 02/94 ▸ 12/01 | 1324816080 | **730997** | 790 414,5 | ALM |
| 1.9 D,1.9 TD | 230/0NMQ/AMMF/AMMQ ANMQ/BLMA/BNMA/BNMF/BNMM/BNMQ/ENMF | D | 1905 | XUD9A,XUD9TEF/W3 | M | + | TSW | 06/98 ▸ 12/01 | 1317828080 | **731611** | 790 414,5 | ALM |
| 1.9 D,1.9 TD | 230/AMMC/AMMD/AMMF ANMA/ANMF/ANMP/BNMA/BNMF/BNMM/BNMQ | D | 1905 | XUD9A,XUD9TEF/W3 | M | + | TSW | 06/98 ▸ 12/01 | 1311003080 | **731611** | 790 414,5 | ALM |
| 1.9 D,1.9 TD | 230/0NMQ/AMMF/AMMQ ANMQ/BLMA/BNMA/BNMF/BNMM/BNMQ/ENMF | D | 1905 | XUD9A,XUD9TEF/W3 | M | - | TSW | 06/98 ▸ 12/01 | 1311003080 | **731611** | 790 414,5 | ALM |
| 1.9 D,1.9 TD | 230/AMMC/AMMD/AMMF ANMA/ANMF/ANMP/BNMA/BNMF/BNMM/BNMQ | D | 1905 | XUD9A,XUD9TEF/W3 | M | - | TSW | 06/98 ▸ 12/01 | 1317828080 | **731611** | 790 414,5 | ALM |

Radiator Radiateur Motorkühler Radiatore di raffreddamento Radiator Radyatör Радиатор Radiador Vízhűtő Vodní chladič Radiator Ψυγείο



• **New** Nouveau **Nuevo** Novo **Nuovo** Nieuw **Neu** Nowość **Yeni** Новый Νέο **Nový**

## DUCATO (230) (94>2001) (.../...)

| Type Ctr. | | CC | | AC | | | OE | Valeo | DIM. | TECH |
|---|---|---|---|---|---|---|---|---|---|---|
| 1.9 D,1.9 TD 230/AAMA/AAMB/AAMD AAMF/AAMQ/AAMR/ABMA/ABMB/ABMD/ABMF/ABMP/ABMQ ABMR/ACMA/ACMD/ACMF/BBMA/BBMD/BBMF/BBMN/BBMP BBMQ/BBMR/BCMA/BCMD/BCMF/BCMQ/EAMF/EBMF | D | 1929 | 230A2.000,230A3.000,230A4.000 | M | + | TSW | 02/94 ▸ 12/01 | 1307391080 | **731611** | 790 414,5 | ALM |
| 1.9 TD 230/ABMA/ABMB/ABMD ABMF/ABMP/ABMQ/ABMR/ACMA/ACMD/ACMF/BBMA/BBMD BBMF/BBMN/BBMP/BBMQ/BBMR/BCMA/BCMD/BCMF/BCMQ EBMF | D | 1929 | 230A3.000,230A4.000 | M | - | TSW | 02/94 ▸ 12/01 | 1307393080 | **730995** | 700 414,5 | CBS |
| 1.9 D 230/AAMA/AAMB/AAMD/AAMF/AAMQ/AAMR/EAMF | D | 1929 | 230A2.000 | M | - | TSW | 02/94 ▸ 12/01 | 1324816080 | **730997** | 790 414,5 | ALM |
| 1.9 TD 230BBMR | D | 1929 | 230A3.000 | M | | TSW | 02/94 ▸ 12/01 | 1307393080 | **730995** | 700 414,5 | CBS |
| 2.0 JTD-EGR | D | 1997 | RHV | M | + | TSW | 02/94 ▸ 12/01 | 1341513080 | **731611** | 790 414,5 | ALM |
| 2.5 D,2.5 TD 230/ADMF/ADMT/AFMP BDMA/BDMB/BDMD/BDMF/BDMG/BDMH/BDMN/BDMQ/BDMR BDMS/BEMF/BEMS/BFMA/BFMB/BFMD/BFMF/BFMG/BFMH BFMN/BFMQ/BFMR/BFMS/BLWF/CDMA/CDMB/CDMF/CDML CDMN/CEMA/CEMB/CEMG/CEMN/CFMA/CFMB/CFMD/CFMF CFMG/CFMH/CFMN | D | 2499 | 8140-47R,8140-67 | M | +/- | TSW | 02/94 ▸ 12/01 | 71735350 | **731611** | 790 414,5 | ALM |
| 2.5 D,2.5 TD 230/ADMF/ADMT/ADMU AEMP/AEMT/AEMU/AFMP/BAMF/BDMA/BDMB/BDMD/BDMF BDMG/BDMH/BDMN/BDMQ/BDMR/BDMS/BDMT/BEMA/BEMB BEMD/BEMF/BEMG/BEMH/BEMN/BEMQ/BEMR/BEMS/BEMT BFMA/BFMB/BFMD/BFMF/BFMG/BFMH/BFMN/BFMQ/BFMR BFMS/BLWF/CDMA/CDMB/CDMD/CDME/CDMF/CDMG/CDMH CDML/CDMM/C | D | 2499 | 8140-47,8140-47R,8140-67 | M | +/- | TSW | 02/94 ▸ 12/01 | 1327478080 | **731611** | 790 414,5 | ALM |
| 2.5 TD 230BFMA | D | 2499 | 8140-47R | M | +/- | TSW | 11/00 ▸ 12/01 | 1341515080 | **731611** | 790 414,5 | ALM |
| 2.5 TD 230CEMF | D | 2499 | 8140-47R | M | + | TSW | 02/94 ▸ 12/01 | 71735350 | **731611** | 790 414,5 | ALM |
| 2.5 D,2.5 TD 230/AEMP/AEMT/AEMU AFMP/BEMA/BEMB/BEMD/BEMF/BEMG/BEMH/BEMN/BEMQ BEMR/BEMS/BEMT/BFMA/BFMB/BFMD/BFMF/BFMG/BFMH BFMN/BFMQ/BFMR/BFMS/BLWF/CDMA/CDMF/CEMA/CEMB CEMD/CEME/CEMF/CEMG/CEMH/CEML/CEMM/CEMN/CFMA CFMB/CFMD/CFMF/CFMG/CFMH/CFMN | D | 2499 | 8140-47,8140-47R,8140-67 | M | + | TSW | 02/94 ▸ | 1311003080 | **731611** | 790 414,5 | ALM |
| 2.5 D,2.5 TD 230/ADMF/ADMT/ADMU BAMF/BDMA/BDMB/BDMD/BDMF/BDMG/BDMH/BDMN/BDMQ BDMR/BDMS/BEMS/CDMA/CDMB/CDMD/CDME/CDMF/CDMG CDMH/CDML/CDMM/CDMN/CEMG/CEMN | D | 2499 | 8140-47R,8140-67 | M | + | TSW | 02/94 ▸ 12/01 | 1311521080 | **730999** | 1000 414 | CBS |
| 2.5 D,2.5 TD 230/ADMF/ADMT/ADMU BAMF/BDMA/BDMB/BDMD/BDMF/BDMG/BDMH/BDMN/BDMQ BDMR/BDMS/CDMA/CDMB/CDMD/CDME/CDMF/CDMG/CDMH CDML/CDMM/CDMN | D | 2499 | 8140-47R,8140-67 | M | +/- | TSW | 02/94 ▸ 12/01 | 71735360 | **730999** | 1000 414 | CBS |
| 2.5 TD 230/BFMB/BFMD/BFMF BFMG/BFMH/BFMN/BFMQ/BFMR/BFMS/BLWF/CDMA | D | 2499 | 8140-47R | M | + | TSW | 02/94 ▸ 12/01 | 1324816080 | **730997** | 790 414,5 | ALM |
| 2.5 TD 230/BEMN/CEMF | D | 2499 | 8140-47,8140-47R | M | + | TSW | 02/94 ▸ 12/01 | 1317828080 | **731611** | 790 414,5 | ALM |
| 2.5 D,2.5 TD 230/ADMU/AEMP/AEMT AEMU/BAMF/BDMA/BDMB/BDMD/BDMF/BDMG/BDMH/BDMR BDMT/BEMA/BEMB/BEMD/BEMF/BEMG/BEMH/BEMN/BEMQ BEMR/BEMT/CDMB/CDMD/CDME/CDMF/CDMG/CDMH/CDMM CDMN/CEMA/CEMB/CEMD/CEME/CEMF/CEMG/CEMH/CEML CEMM/CEMN 5164489 ▸ | D | 2499 | 8140-47,8140-67 | M | - | TSW | > ▸ 12/01 | 71735350 | **731611** | 790 414,5 | ALM |
| 2.5 D,2.5 TD 230/ADMF/ADMT/ADMU BAMF/BDMA/BDMB/BDMD/BDMF/BDMG/BDMH/BDMN/BDMQ BDMR/BDMS/BDMT/CDMA/CDMB/CDMD/CDME/CDMF/CDMG CDMH/CDML/CDMM/CDMN 5164489 ▸ | D | 2499 | 8140-47R,8140-67 | M | - | TSW | > ▸ 12/01 | 1317828080 | **731611** | 790 414,5 | ALM |
| 2.5 D,2.5 TD 230/AEMP/AEMT/AEMU AFMP/BEMA/BEMB/BEMD/BEMF/BEMG/BEMH/BEMN/BEMQ BEMR/BEMS/BEMT/BFMA/BFMB/CEMA/CEMB/CEMD/CEME CEMF/CEMG/CEMH/CEML/CEMM/CEMN/CFMA/CFMB/CFMD CFMF/CFMG/CFMH/CFMN | D | 2499 | 8140-47,8140-47R,8140-67 | M | - | TSW | 02/94 ▸ 12/01 | 1324816080 | **730997** | 790 414,5 | ALM |
| 2.5 TD 230CEMA | D | 2499 | 8140-47R | M | - | TSW | 11/00 ▸ 12/01 | 1327478080 | **731611** | 790 414,5 | ALM |
| 2.5 TD 230/CDMA/CDMF | D | 2499 | 8140-47R | M | | TSW | 02/94 ▸ 12/01 | 1324816080 | **730997** | 790 414,5 | ALM |
| 2.5 D 230/ADMF/ADMT/ADMU/BAMF/BDMA/BDMB/BDMD/BDMF BDMG/BDMH/BDMN/BDMQ/BDMR/BDMS/BDMT/BEMS/CDMA CDMB/CDMD/CDME/CDMF/CDMG/CDMH/CDML/CDMM/CDMN CEMG/CEMN 5164490 ▸ | D | 2499 | 8140-67 | M | | TSW | 02/94 ▸ 12/01 | 1317828080 | **731611** | 790 414,5 | ALM |
| 2.5 TD 230BEMN | D | 2499 | 8140-47 | M | | TSW | 11/00 ▸ 12/01 | 1327478080 | **731611** | 790 414,5 | ALM |

# FIAT (.../...)

## DUCATO (230) (94>2001) (.../...)

| Type Ctr. | CC | | AC | | 2+3 | OE | Valeo | DIM. | TECH |
|---|---|---|---|---|---|---|---|---|---|
| 2.5 D 230/ADMF/ADMT/ADMU/BAMF/BDMA/BDMB/BDMD/BDMF<br>**731611** 790 414,5<br>BDMG/BDMH/BDMN/BDMQ/BDMR/BDMS/BDMT/CDMA/CDMB<br>CDMD/CDME/CDMF/CDMG/CDMH/CDML/CDMM/CDMN<br>▸ 5164489 | D | 2499<br>ALM | 8140-67 | M | - | TSW02/94 | ▸ | 1311003080 | |
| 2.8 D,2.8 TDi 233CIMN ; 230/AIMF<br>AIMT/AIMU/BIMA/BIMC/BIMD/BIMF/BIMH/BIMM/BIMN<br>BIMP/BIMQ/BIMS/BIMT/BLWA/BLWF/BLWN/BLWQ/BLWS<br>BLWT/CEMN/CIMA/CIME/CIMF/CIMH/CIML/CIMM/CIMN<br>CIWA/CIWF/CIWH/CIWN/CLMA/CLMB/CLME/CLMF/CLMH<br>CLML/CLMM/CLMN/CLWA/CLWF/CLWG/CLWH/CLWN | D | 2798 | 8140-43,8140-63 | M | +/- | TSW | 01/98 ▸ 12/01 | 1317828080 | **731611** 790 414,5 | ALM |
| 2.8 D 230BIMH | D | 2798 | 8140-63 | M | +/- | TSW | 11/00 ▸ 12/01 | 1341515080 | **731611** 790 414,5 | ALM |
| 2.8 D,2.8 TDi 230/ALMP/ALMT/ALWP<br>ALWT/BLMA/BLMF/BLMH/BLMM/BLMN/BLMP/BLMQ/BLMS<br>BLMT/BLMU/BLWA/BLWF/BLWN/BLWQ/BLWS/BLWT/CEMN<br>CIWH/CIWN/CLMA/CLMB/CLME/CLMF/CLMH/CLML/CLMM<br>CLMN/CLWA/CLWF/CLWG/CLWH/CLWN | D | 2798 | 8140-43,8140-63 | M | + | TSW | 01/98 ▸ 12/01 | 1317828080 | **731611** 790 414,5 | ALM |
| 2.8 TDi 230/ALMP/ALMT/ALWP<br>BLMA/BLMF/BLMH/BLMN/BLMQ/BLWA/BLWF/BLWN/BLWQ<br>BLWS/CEMN/CLMA/CLMB/CLME/CLMF/CLMM/CLMN/CLWF<br>CLWG/CLWH/CLWN | D | 2798 | 8140-43 | M | + | TSW | 01/98 ▸ 12/01 | 71735350 | **731611** 790 414,5 | ALM |
| 2.8 D 233CIMN ; 230/AIMF/AIMT/AIMU/BIMA/BIMC/BIMD<br>BIMF/BIMH/BIMM/BIMN/BIMP/BIMQ/BIMS/BIMT/CIMA<br>CIME/CIMF/CIMH/CIML/CIMM/CIMN/CIWA/CIWF/CIWN | D | 2798 | 8140-63 | M | + | TSW | 06/98 ▸ 12/01 | 1311521080 | **730999** 1000 414 | CBS |
| 2.8 JTD 230/APMF/APMP/APWP<br>BLMF/BPMA/BPMF/BPMN/BPMP/BPMS/BPMT/BPWD/BPWF<br>CPMA/CPME/CPMF/CPML/CPMM/CPMN/CPWA/CPWD | D | 2798 | 8140-43S | M | + | TSW | 10/00 ▸ 12/01 | 1341515080 | **731611** 790 414,5 | ALM |
| 2.8 D,2.8 TDi 230/ALMP/ALMT/ALWP<br>ALWT/BLMA/BLMF/BLMH/BLMM/BLMN/BLMP/BLMQ/BLMS<br>BLMT/BLMU/BLWA/BLWF/BLWN/BLWQ/BLWS/BLWT/CEMN<br>CIWH/CIWN/CLMA/CLMB/CLME/CLMF/CLMH/CLML/CLMM<br>CLMN/CLWA/CLWF/CLWG/CLWH/CLWN | D | 2798 | 8140-43,8140-63 | M | - | TSW | 01/98 ▸ 12/01 | 1324816080 | **730997** 790 414,5 | ALM |
| 2.8 D,2.8 JTD 233CIMN ; 230/AIMF<br>AIMT/AIMU/APMF/APMP/APWP/BIMA/BIMC/BIMD/BIMF<br>BIMH/BIMM/BIMN/BIMP/BIMQ/BIMS/BIMT/BLMF/BPMA<br>BPMF/BPMN/BPMP/BPMS/BPMT/BPWD/BPWF/CIMA/CIME<br>CIMF/CIMH/CIML/CIMM/CIMN/CIWA/CIWF/CIWN/CPMA<br>CPME/CPMF/CPML/CPMM/CPMN/CPWA/CPWD | D | 2798 | 8140-43S,8140-63 | M | - | TSW | 06/98 ▸ 12/01 | 1317828080 | **731611** 790 414,5 | ALM |
| 2.8 D,2.8 TDi 233CIMN ; 230/AIMF<br>AIMT/AIMU/ALWT/BIMA/BIMC/BIMD/BIMF/BIMH/BIMM<br>BIMN/BIMP/BIMQ/BIMS/BIMT/BLMF/BLMM/BLMN/BLMP<br>BLMQ/BLMS/BLMT/BLMU/BLWF/BLWN/BLWT/CEMN/CIMA<br>CIME/CIMF/CIMH/CIML/CIMM/CIMN/CIWA/CIWF/CIWH<br>CIWN/CLMA/CLMF/CLMH/CLML/CLMN/CLWA/CLWH/CLWN | D | 2798 | 8140-43,8140-63 | M | - | TSW | 06/98 ▸ 12/01 | 71735350 | **731611** 790 414,5 | ALM |
| 2.8 JTD 230/APMF/APMP/APWP<br>BLMF/BPMA/BPMF/BPMN/BPMP/BPMS/BPMT/BPWD/BPWF<br>CPMA/CPME/CPMF/CPML/CPMM/CPMN/CPWA/CPWD | D | 2798 | 8140-43S | M | - | TSW | 10/00 ▸ 12/01 | 1329227080 | **731611** 790 414,5 | ALM |
| 2.8 TDi 230/ALMP/ALMT/ALWP<br>ALWT/BLMA/BLMF/BLMH/BLMM/BLMN/BLMP/BLMQ/BLMS<br>BLMT/BLMU | D | 2798 | 8140-43 | M | - | TSW | 11/00 ▸ 12/01 | 1327478080 | **731611** 790 414,5 | ALM |
| 2.8 JTD 230 | D | 2798 | 8140-43S | A | + | TSW | 05/01 ▸ 12/01 | 1327478080 | **731611** 790 414,5 | ALM |
| 2.8 JTD 230 | D | 2798 | 8140-43S | A | - | TSW | 05/01 ▸ 12/01 | 1341513080 | **731611** 790 414,5 | ALM |

## DUCATO (2002>2006)

| | | | | | | | | | | |
|---|---|---|---|---|---|---|---|---|---|---|
| 2.0 i GPL 244/AAMA/BTMF | G | 1998 | RFL | M | +/- | TSW | 01/02 ▸ 06/06 | 1341513080 | **731611** 790 414,5 | ALM |
| 2.0 i GPL 244BTMF | G | 1998 | RFL | M | | TSW | 01/02 ▸ 06/06 | 1341513080 | **731611** 790 414,5 | ALM |
| 2.0 i 244/APMP/ATMF/ATMP/ATMR/BTMF/BTMR/BTWF/CTMF<br>CTMN/CTWN | E | 1998 | RFL | M | +/- | TSW | 01/02 ▸ | 1329226080 | **731611** 790 414,5 | ALM |
| 2.0,2.0 i 244/AAMA/APMF/APMP<br>APMR/ATMF/ATMN/ATMP/ATMR/BPMA/BPMF/BTMA/BTMF<br>BTMN/BTMP/BTMR/BTMS/BTWF/BTWS/BTWT/CTMF/CTMN<br>CTWN | E | 1998 | RFL | M | +/- | TSW | 01/02 ▸ 06/06 | 1341513080 | **731611** 790 414,5 | ALM |
| 2.0 i 244/BTMF/BTMN | E | 1998 | RFL | M | | TSW | 01/02 ▸ 06/06 | 1341513080 | **731611** 790 414,5 | ALM |
| 2.0 JTD 244/AAMA/AAMF/AAMN<br>AAMP/AAMR/BAMA/BAMF/BAMN/BAMR | D | 1997 | RHV | M | + | TSW | 01/02 ▸ 07/03 | 1329225080 | **731611** 790 414,5 | ALM |
| 2.0 JTD 244/AAMA/AAMF/AAMN<br>AAMP/AAMR/BAMA/BAMF/BAMN/BAMR | D | 1997 | RHV | M | + | TSW | 01/02 ▸ 06/06 | 1341514080 | **731611** 790 414,5 | ALM |
| 2.0 JTD 244/AAMA/AAMF/AAMN<br>AAMP/AAMR/BAMA/BAMF/BAMN/BAMR | D | 1997 | RHV | M | - | TSW | 01/02 ▸ 06/06 | 1329227080 | **731611** 790 414,5 | ALM |

Radiator Radiateur Motorkühler Radiatore di raffreddamento Radyatör Radiator Radiador Радиатор vízhűtő Vodní chladič Radiator Ψυγείο



• **New** Nouveau **Nuevo** Novo **Nuovo** Nieuw **Neu** Nowość **Yeni** Новый Νέο **Novy**

# FIAT (.../...)

| | | CC | | AC | | | | OE | Valeo | DIM. | TECH |
|---|---|---|---|---|---|---|---|---|---|---|---|
| **DUCATO (2002>2006) (.../...)** | | | | | | | | | | | |
| 2.3 JTD 244/ASMF/ASMN/ASMP ASMR/BSMA/BSMF/BSMH/BSMN/BSMP/BSMR/BSMS/BSMT CSMF | D | 2287 | F1AE0481C | M | + | TSW | 01/02 ▸ 06/06 | 1341513080 | **731611** | 790 414,5 | ALM |
| 2.3 JTD 244/ASMF/ASMN/ASMP ASMR/BSMA/BSMF/BSMH/BSMN/BSMP/BSMR/BSMS/BSMT CSMF | D | 2287 | F1AE0481C | M | - | TSW | 01/02 ▸ 07/03 | 1329225080 | **731611** | 790 414,5 | ALM |
| 2.3 JTD 244/ASMF/ASMN/ASMP ASMR/BSMA/BSMF/BSMH/BSMN/BSMP/BSMR/BSMS/BSMT CSMF | D | 2287 | F1AE0481C | M | - | TSW | 01/02 ▸ 06/06 | 1329227080 | **731611** | 790 414,5 | ALM |
| 2.3 JTD 244/ASMF/ASMN/ASMP ASMR/BSMA/BSMF/BSMH/BSMN/BSMP/BSMR/BSMS/BSMT CSMF | D | 2287 | F1AE0481C | M | - | TSW | 07/03 ▸ 06/06 | 1341514080 | **731611** | 790 414,5 | ALM |
| 2.8 TD 244/APMF/APMP/APMR BPMA/BPMF/BPMP/BPWN/BPWR | D | 2798 | 8140-43 | M | +/- | TSW | 01/02 ▸ 06/06 | 1341515080 | **731611** | 790 414,5 | ALM |
| 2.8 TD 244/APMF/APMP/APMR BPMA/BPMF/BPMP/BPWN/BPWR | D | 2798 | 8140-43 | M | +/- | TSW | 01/02 ▸ 07/03 | 1327478080 | **731611** | 790 414,5 | ALM |
| 2.8 JTD 244/APMF/APMN/APMP APMR/APWP/BPMA/BPMF/BPMH/BPMN/BPMP/BPMR/BPMS BPMT/BPNS/BPWN/BPWR/CPMF/CPMN/CPWN | D | 2798 | 8140-43S | M | + | TSW | 01/02 ▸ 06/06 | 1341514080 | **731611** | 790 414,5 | ALM |
| 2.8 JTD 244/APMF/APMN/APMP APMR/APWP/BPMA/BPMF/BPMH/BPMN/BPMP/BPMR/BPWN BPWR/CPMF/CPMN/CPWN | D | 2798 | 8140-43S | M | + | TSW | 01/02 ▸ 07/03 | 1329225080 | **731611** | 790 414,5 | ALM |
| 2.8 JTD 244/APMF/APMN/APMP APMR/APWP/BPMA/BPMF/BPMH/BPMN/BPMP/BPMR/BPMS BPMT/BPNS/BPWN/BPWR/CPMF/CPMN/CPWN | D | 2798 | 8140-43N,8140-43S | M | - | TSW | 01/02 ▸ 06/06 | 1329227080 | **731611** | 790 414,5 | ALM |
| 2.8 TD 244/APMF/APMP/APMR BPMA/BPMF/BPMP/BPWN/BPWR | D | 2798 | 8140-43 | M | - | TSW | 01/02 ▸ 07/03 | 1329225080 | **731611** | 790 414,5 | ALM |
| 2.8 JTD,2.8 TD 244/APMF/APMP/APMR APWP/BPMA/BPMF/BPMP/BPMR/BPWN/BPWR/CPMF/CPMN CPWN | D | 2798 | 8140-43,8140-43S | M | - | TSW | 07/03 ▸ 06/06 | 1341514080 | **731611** | 790 414,5 | ALM |
| 2.8 JTD | D | 2798 | 8140-43N | M | | TSW | 04/04 ▸ 06/06 | 1341514080 | **731611** | 790 414,5 | ALM |
| **DUCATO (2006>)** | | | | | | | | | | | |
| 2.2 MJTD 250 | D | 2198 | 4HV | M | + | | 07/06 ▸ | 1342588080 | | 780 375 | ALB |
| 2.3 MJTD 250X ; 251 | D | 2287 | F1AE0481D | M | + | | 07/06 ▸ | 1349207080 | | 780 375 | ALB |
| 2.3 MJTD 250X | D | 2287 | F1AE0481D | M | - | | 07/06 ▸ | 1349196080 | | 780 375 | ALB |
| 2.3 MJTD 251 | D | 2287 | F1AE0481D | M | | | 07/06 ▸ | 1349196080 | | 780 375 | ALB |
| 2.3 MJTD 250X | D | 2287 | F1AE0481D | M | | | 07/06 ▸ | 1342688080 | | 780 375 | ALB |
| 3.0 MJTD 250XX ; 251X | D | 2999 | F1CE0481D | M | + | | 07/06 ▸ | 1342688080 | | 780 375 | ALB |
| 3.0 MJTD 250XX | D | 2999 | F1CE0481D | M | - | | 07/06 ▸ | 1342588080 | | 780 375 | ALB |
| 3.0 MJTD 251X | D | 2999 | F1CE0481D | M | | | 07/06 ▸ | 1342588080 | | 780 375 | ALB |
| **DUCATO RU (2008>)** | | | | | | | | | | | |
| 2.3 JTD 16V 245 ; 244//ASMF | D | 2287 | F1AE0481C | M | | TSW | 01/08 ▸ | 1329227080 | **731611** | 790 414,5 | ALM |
| **DUNA** | | | | | | | | | | | |
| 1.1 146/A754/A755/A7CT | E | 1116 | 146A6.000 | M | - | TSW | 03/87 ▸ 12/91 | 7652127 | **730990** | 441 322 | ALM |
| 1.3 146/AW54/AW55/AWCT | E | 1301 | 146A5.000 | M | - | TSW | 03/87 ▸ 12/91 | 7652127 | **730990** | 441 322 | ALM |
| **FIORINO (127) (78>87)** | | | | | | | | | | | |
| 903 127/AF/AF1/AIIF | E | 903 | 127GL.000 | M | - | | 01/79 ▸ 04/83 | 5882355 | **883428** | 310 357 | ALM |
| 1050 127/A1IF/A1IP/A1IV | E | 1049 | 127A.000 | M | - | | 09/79 ▸ 04/83 | 5975062 | | 310 396 | ALM |
| 1050 127/A1IF/A1IP/A1IV | E | 1049 | 127A.000 | M | - | | 05/83 ▸ 1987 | 7500726 | | 310 396 | ALM |
| **FIORINO (146) (88>93)** | | | | | | | | | | | |
| - 146/C4/CG43/CG53 ; 16C/G43D/G53D | E | 1116 | 146A9.000 | M | - | TSW | 03/88 ▸ 12/92 | 7652127 | **730990** | 441 322 | ALM |
| - 146/C4/CG43/CG53 | E | 1116 | 146A9.000 | M | | TSW | 01/93 ▸ 06/93 | 7685063 | **730991** | 520 322 | ALM |
| - 146/AW53 ; 16A/W52F/W53F | E | 1301 | 146A5.000 | M | - | TSW | 03/88 ▸ 12/92 | 7652127 | **730990** | 441 322 | ALM |
| - 146AW53 | E | 1301 | 146A5.000 | M | | TSW | 01/93 ▸ 06/93 | 7685063 | **730991** | 520 322 | ALM |
| - 146A953 | E | 1498 | 149C1.000 | M | - | TSW | > ▸ 06/93 | 7685063 | **730991** | 520 322 | ALM |
| 8071714 ▸ | | | | | | | | | | | |
| - 146A953 | E | 1498 | 149C1.000 | M | - | TSW | 07/90 ▸ | 7578119 | **730991** | 520 322 | ALM |
| **FIORINO (146) (93>2000)** | | | | | | | | | | | |
| - 146/RA52/RA53 | E | 1301 | 146A5.000 | M | - | TSW | 08/93 ▸ 12/94 | 7685063 | **730991** | 520 322 | ALM |
| - 146/RB52/RB53/RE52/RE53 | E | 1372 | 146C5.000,146D5.000 | M | - | TSW | 08/93 ▸ 09/00 | 7685063 | **730991** | 520 322 | ALM |
| - 146/RC52/RC53 | E | 1581 | 146C6.000 | M | - | TSW | 08/93 ▸ 09/00 | 7685063 | **730991** | 520 322 | ALM |
| - 146RF | E | 1581 | 146D6.000 | M | | TSW | 08/93 ▸ 09/00 | 7685063 | **730991** | 520 322 | ALM |
| - 146/RD52/RD53 | D | 1697 | 146B2.000 | M | +/- | TSW | 08/93 ▸ 09/00 | 50005580 | **811387** | 519 307 | ALB |
| - 146RH53 | D | 1698 | 146D7.000 | M | + | | 06/96 ▸ 09/00 | 50011322 | | 554 374 | CBS |

# FIAT (.../...)

| | | | CC | | | AC | | | OE | Valeo | DIM. | TECH |
|---|---|---|---|---|---|---|---|---|---|---|---|---|
| **FIORINO (146) (93>2000) (.../...)** | | | | | | | | | | | | |
| - | 146RH53 | D | 1698 | 146D7.000 | M | - | TSW | 06/96 ▸ 09/00 | 50010242 | **732685** | 558 377,5 | ALM |
| **FIORINO (2008>)** | | | | | | | | | | | | |
| 1.4 i 70 | 225BXC1 | F | 1368 | 350A.1000 GNV | M | | | 12/07 ▸ | 55700447 | **735042** | 540 377,5 | ALM |
| **SCUDO (95>2003)** | | | | | | | | | | | | |
| 1.6 i | 220/WG5/XG5/XG59/YG5/YH5/ZG5 | E | 1581 | 220A2.000 | M | + | TSW | 07/95 ▸ 12/03 | 1473910080 | **731166** | 670 470 | ALM |
| 1.6 i | 220/WG5/XG5/XG59/YG5/YH5/ZG5 | E | 1581 | 220A2.000 | M | - | VCAP TSW | 07/95 ▸ 12/03 | 1485799080 | **731165** | 600 470 | ALM |
| 1.6 i ▸ 8211 | 220/WG5/XG5/XG59/YG5/YH5/ZG5 | E | 1581 | 220A2.000 | M | - | VCAP TSW | 07/95 ▸ 05/99 | 1471463080 | **731165** | 600 470 | ALM |
| 2.0 i 16V | 220/XQ5/XQ50 | E | 1997 | EW10J4 | M | + | TSW | 09/00 ▸ 12/03 | 1475060080 | **731166** | 670 470 | ALM |
| 2.0 i 16V | 220/XQ5/XQ50 | E | 1997 | EW10J4 | M | - | VCAP TSW | 09/00 ▸ 12/03 | 1485799080 | **731165** | 600 470 | ALM |
| 2.0 i 16V | 220XQ40 | E | 1997 | EW10J4 | A | + | TSW | 09/00 ▸ 12/03 | 1475060080 | **731166** | 670 470 | ALM |
| 2.0 i 16V | 220XQ40 | E | 1997 | EW10J4 | A | - | VCAP TSW | 09/00 ▸ 12/03 | 1485799080 | **731165** | 600 470 | ALM |
| 1.9 D | 220/XM50/YM5/ZM5 | D | 1868 | DW8 | M | + | TSW | 07/96 ▸ 12/99 | 1475845080 | **731168** | 670 470 | ALM |
| 1.9 D | 220/XM50/XR5A/XU50/YM5/ZM5 | D | 1868 | DW8,DW8B | M | + | TSW | 12/99 ▸ 12/03 | 1489463080 | **732692** | 669 470 | ALB |
| 1.9 D ▸ 8421 | 220/XM50/YM5/ZM5 | D | 1868 | DW8 | M | + | TSW | 12/99 ▸ | 1482543080 | **732692** | 669 470 | ALB |
| 1.9 D | 220/XM50/XR5A/XU50/YM5/ZM5 | D | 1868 | DW8,DW8B | M | - | TSW | 07/96 ▸ 12/03 | 1475060080 | **731166** | 670 470 | ALM |
| 1.9 D ▸ 8420 | 220/XM50/YM5/ZM5 | D | 1868 | DW8 | M | + | TSW | 07/96 ▸ 12/99 | 1475844080 | **731168** | 670 470 | ALM |
| 1.9 D,1.9 TD | 220/WH5C/XE5/XE59 XF5/XF59/XH5/XH51/XH5A/XH5B/XH50/YE5/YF5/YH5 YH5C/ZE5/ZE5A/ZF5/ZH5/ZH5A/ZH5B | D | 1905 | XUD9A,XUD9TEF/K,XUD9TEF/L3,XUD9TEF/W3 | M | + | TSW | 07/95 ▸ 12/03 | 1475845080 | **731168** | 670 470 | ALM |
| 1.9 TD | 220/WH5C/XE5/XE59 XH5/XH51/XH5A/XH5B/XH50/YE5/YH5/YH5C/ZE5 ZE5A/ZH5/ZH5A/ZH5B | D | 1905 | XUD9TEF/K,XUD9TEF/L3,XUD9TEF/W3 | M | - | TSW | 07/95 ▸ 12/03 | 1475844080 | **731168** | 670 470 | ALM |
| 1.9 D | 220/XF5/XF59/YF5/ZF5 | D | 1905 | XUD9A | M | - | TSW | 07/95 ▸ 07/01 | 1475060080 | **731166** | 670 470 | ALM |
| 2.0 JTD | 220/XN50/XP50/YP5A ZP5/ZP5A | D | 1997 | DW10BTED,DW10BTED+L4 | M | - | TSW | 02/00 ▸ | 1482543080 | **732692** | 669 470 | ALB |
| 2.0 JTD | 220/XN50/XP50/YP5A ZP5/ZP5A | D | 1997 | DW10BTED,DW10BTED+L4 | M | - | TSW | 02/00 ▸ 12/03 | 1489463080 | **732692** | 669 470 | ALB |
| 2.0 JTD 16V | 220/XR5A/XR5B | D | 1997 | DW10ATED4 | M | | TSW | 01/01 ▸ 12/03 | 1475845080 | **731168** | 670 470 | ALM |
| **SCUDO (2004>2006)** | | | | | | | | | | | | |
| 2.0 16V | 220/KQ5A/ZQ5R/ZU5R | E | 1997 | EW10J4 | M | + | TSW | 01/04 ▸ 12/06 | 1475060080 | **731166** | 670 470 | ALM |
| 2.0 16V | 220/KQ5A/ZQ5R/ZU5R | E | 1997 | EW10J4 | M | - | VCAP TSW | 01/04 ▸ 12/06 | 1485799080 | **731165** | 600 470 | ALM |
| 2.0 16V | 220KQ4A | E | 1997 | EW10J4 | A | + | TSW | 01/04 ▸ 12/06 | 1475060080 | **731166** | 670 470 | ALM |
| 2.0 16V | 220KQ4A | E | 1997 | EW10J4 | A | - | VCAP TSW | 01/04 ▸ 12/06 | 1485799080 | **731165** | 600 470 | ALM |
| 1.9 D | 220/YU5R/ZQ5R/ZU5R | D | 1868 | DW8B | M | + | TSW | 01/04 ▸ 12/06 | 1489463080 | **732692** | 669 470 | ALB |
| 1.9 D | 220/YU5R/ZQ5R/ZU5R | D | 1868 | DW8B | M | - | TSW | 01/04 ▸ 12/06 | 1475060080 | **731166** | 670 470 | ALM |
| 2.0 JTD 16V | 222KR5A | D | 1997 | DW10ATED4 | M | +/- | TSW | 01/04 ▸ 12/06 | 1475845080 | **731168** | 670 470 | ALM |
| 2.0 JTD | 220/KP5A/YP5R/YV5R ZP5R/ZV5R ; 222/0ZP5/0ZPS/0ZV5 | D | 1997 | DW10BTED,DW10BTED+L4 | M | +/- | TSW | 01/04 ▸ 12/06 | 1489463080 | **732692** | 669 470 | ALB |
| **STRADA PICK UP** | | | | | | | | | | | | |
| Trekking | 178EXG | E | 1242 | 178B5.000 | M | + | TSW | 03/99 ▸ 03/03 | 46750718 | **732005** | 522 359 | ALM |
| Trekking | 178EXG | E | 1242 | 178B5.000 | M | - | TSW | 03/99 ▸ 03/03 | 46750717 | **732812** | 520 359 | ALM |
| - | 178/EX/EXH | D | 1697 | 176A3.000,176A3.000F | M | +/- | TSW | 03/99 ▸ 03/03 | 46440541 | **732147** | 520 367,9 | ALB |
| **STRADA PICK UP (2003>2006)** | | | | | | | | | | | | |
| 1.2 i | 178EYA1 | E | 1242 | 188A4.000 | M | +/- | TSW | 03/03 ▸ 05/06 | 46833511 | **732948** | 522 377,5 | ALM |
| 1.2 i | 178EYA1 | E | 1242 | 188A4.000 | M | + | TSW | 03/03 ▸ 05/06 | 46750718 | **732005** | 522 359 | ALM |
| 1.2 i | 178EYA1 | E | 1242 | 188A4.000 | M | | TSW | 03/03 ▸ 05/06 | 46750717 | **732812** | 520 359 | ALM |
| **STRADA II PICK-UP (2006>)** | | | | | | | | | | | | |
| 1.3 MJTD | 178FXG | D | 1248 | 223A9.000 | M | | | 06/06 ▸ | 51718122 | **735297** | 430 595 | |
| **TALENTO** | | | | | | | | | | | | |
| 2.0 | 290/U4/UA4/UEH4/UT4 | E | 1971 | 170B | M | | TSW | 11/88 ▸ 1994 | 7555802 | **811380** | 663 414 | ALM |
| 1.9 D | 290/UAK/UEHK/UK/UTK | D | 1929 | 149B1.000 | M | - | TSW | 03/88 ▸ 1994 | 5969172 | **883765** | 825 414 | ALM |

Radiator Radiateur Motorkühler Radiatore di raffreddamento Radiator Radyatör Радиатор Radiador Radiator Vodní chladič vízhűtő Ψυγείο



• **New** Nouveau **Nuevo** Novo **Nuovo** Nieuw **Neu** Nowość **Yeni** Новый Νέο **Novy**

| Type | | CC | | | AC | | | OE | Valeo | DIM. | | TECH |
|---|---|---|---|---|---|---|---|---|---|---|---|---|
| **FIAT (.../...)** | | | | | | | | | | | | |
| **TALENTO (.../...)** | | | | | | | | | | | | |
| 1.9 D 290/UAK/UEHK/UK/UTK | D | 1929 | 149B1.000 | M | | TSW | 03/88 ▸ 1994 | 71735365 | **883765** | 825 | 414 | ALM |
| **FORD** | | | | | | | | | | | | |
| **C-MAX (2010>)** | | | | | | | | | | | | |
| 1.6 SCTi 150 16V,1.6 SCTi 182 16V | E | 1596 | 1.6 DC ECOBOOST | M | +/- | | 08/10 ▸ | 1493773 | •**735373** | 672 | 470 | ALB |
| 2.0 TDCi 115,2.0 TDCi 140,2.0 TDCi 163 | D | 1997 | 2.0DQ 16V CR TC<br>2.0DQ DOHC 163,2.0DQ DOHC DSL | M | +/- | | 08/10 ▸ | 1493774 | •**735374** | 672 | 470 | ALB |
| 2.0 TDCi 140,2.0 TDCi 163 | D | 1997 | 2.0DQ 16V CR TC<br>2.0DQ DOHC 163 | M | +/- | | 08/10 ▸ | 1493773 | •**735373** | 672 | 470 | ALB |
| **CAPRI II** | | | | | | | | | | | | |
| 2.0 | E | 1993 | NEE,NYK | M | - | | 02/74 ▸ 12/77 | 6078971 | **819240** | 345 | 430 | CBS |
| 2.0 | E | 1993 | NEE,NYK | M | - | | 02/74 ▸ 12/77 | 6084481 | **730110** | 350 | 442 | CBS |
| **CAPRI III** | | | | | | | | | | | | |
| 1.3 | E | 1296 | J3C,J3N,JSD | M | - | | 01/78 ▸ 04/87 | 1417980 | **819151** | 273 | 445 | CBS |
| 1.3 | E | 1298 | J1E,J2F,J2N | M | - | | 06/79 ▸ 04/87 | 1417980 | **819151** | 273 | 445 | CBS |
| 1.6 | E | 1592 | LEN | M | - | | 01/78 ▸ 04/87 | 6078971 | **819240** | 345 | 430 | CBS |
| 1.6 | E | 1592 | LEN | M | - | | 01/78 ▸ 04/87 | 6084481 | **730110** | 350 | 442 | CBS |
| 1.6 | E | 1593 | LAC,LAN | M | - | | 02/79 ▸ 04/87 | 6084481 | **730110** | 350 | 442 | CBS |
| 1.6 | E | 1593 | LAC,LAN | M | - | | 02/79 ▸ 04/87 | 6078971 | **819240** | 345 | 430 | CBS |
| 2.0 | E | 1993 | NE3,NEN | M | - | | 01/78 ▸ 04/87 | 6084481 | **730110** | 350 | 442 | CBS |
| 2.0 | E | 1993 | NE3,NEN | M | - | | 01/78 ▸ 04/87 | 6078971 | **819240** | 345 | 430 | CBS |
| 2.0 | E | 1998 | NYL | M | - | | 08/81 ▸ 04/87 | 6084481 | **730110** | 350 | 442 | CBS |
| 2.0 | E | 1998 | NYL | M | - | | 08/81 ▸ 04/87 | 6078971 | **819240** | 345 | 430 | CBS |
| **CORTINA** | | | | | | | | | | | | |
| 1.6 | E | 1592 | LEE | M | - | | 11/76 ▸ 1979 | 1587929 | **730110** | 350 | 442 | CBS |
| 2.0,2.3 | | - | | M | - | | 1979 ▸ 10/82 | 6004443 | | 350 | 434 | CBS |
| 1.3,1.6 | | - | | M | - | | 11/76 ▸ 10/82 | 1587929 | **730110** | 350 | 442 | CBS |
| 2.0 | | - | | M | - | | 11/76 ▸ 1979 | 1587932 | | 346 | 406 | CBS |
| **COUGAR** | | | | | | | | | | | | |
| 2.5 i V6 | E | 2495 | LCBE | M | +/- | TSW | 06/00 ▸ 02/01 | 1036597 | **734303** | 620 | 395 | ALB |
| 2.5 i V6 | E | 2495 | LCBE | A | +/- | | 06/00 ▸ 02/01 | 1058734 | | 620 | 397 | ALB |
| 2.5 i V6 FT61L | E | 2544 | LCBA | M | +/- | TSW | 09/98 ▸ 03/99 | 1024051 | **731257** | 618 | 382 | CBS |
| 2.5 i V6 | E | 2544 | LCBA,MABA | M | +/- | TSW | 03/99 ▸ 02/01 | 1036597 | **734303** | 620 | 395 | ALB |
| 2.5 i V6 FT61L | E | 2544 | LCBA | A | +/- | | 03/99 ▸ 06/00 | 1058734 | | 620 | 397 | ALB |
| **ESCORT (80>86)** | | | | | | | | | | | | |
| 1.1 | E | 1117 | GLA | M | - | | 08/82 ▸ 02/86 | 6138598 | **811046** | 493 | 217 | CBS |
| 1.1 | E | 1117 | GMA,GPA | M | | TSW | 08/80 ▸ 02/86 | 6138596 | **811047** | 600 | 290 | CBS |
| 1.3 | E | 1296 | JPA | M | - | TSW | 08/80 ▸ 02/86 | 6138596 | **811047** | 600 | 290 | CBS |
| 1.6,1.6 i | E | 1597 | LRA,LUA | M | - | TSW | 08/80 ▸ 02/86 | 6138600 | **811047** | 600 | 290 | CBS |
| 1.6 i | E | 1597 | LUE | M | - | TSW | 02/82 ▸ 07/84 | 6138596 | **811047** | 600 | 290 | CBS |
| 1.6 Turbo | E | 1597 | LNA | M | - | | 08/83 ▸ 02/86 | 1630556 | | 490 | 305 | CBS |
| 1.6 | E | 1598 | LPA | A | - | | 08/80 ▸ 02/86 | 6138597 | | 600 | 289 | CBS |
| 1.6 | E | 1598 | LPA | M | - | | 08/80 ▸ 02/86 | 6138596 | **811047** | 600 | 290 | CBS |
| 1.6 D AVA/HJ | D | 1608 | LT | M | - | TSW | 04/84 ▸ 02/86 | 6138600 | **811047** | 600 | 290 | CBS |
| **ESCORT (86>90)** | | | | | | | | | | | | |
| 1.1 | E | 1117 | GSG | M | - | | 01/86 ▸ 09/90 | 6168493 | | 602 | 272 | CBS |
| 1.1 | E | 1117 | GSG | M | - | | 01/86 ▸ 09/90 | 1647744 | | 500 | 285 | ALM |
| 1.1 | E | 1117 | GSG | M | | | 01/86 ▸ 07/88 | 6165941 | | 500 | 285 | ALM |
| 1.1 | E | 1117 | GSG | M | | | 01/86 ▸ 09/90 | 1652498 | | 602 | 272 | CBS |
| 1.3 | E | 1297 | JLA | M | - | | 01/86 ▸ 09/90 | 6168493 | | 602 | 272 | CBS |
| 1.3 | E | 1297 | JLA | M | - | | 01/86 ▸ 09/90 | 1647745 | | 600 | 285 | ALM |
| 1.3 | E | 1297 | JLA | M | - | | 03/86 ▸ 07/88 | 6165942 | | 600 | 285 | ALM |
| 1.3 | E | 1297 | JLA | M | | | 01/86 ▸ 07/88 | 1643544 | | 600 | 285 | ALM |
| 1.3 | E | 1297 | JLA | M | | | 01/86 ▸ 09/90 | 1652498 | | 602 | 272 | CBS |
| 1.4,1.4 i GAF | E | 1392 | FU,FUA | M | +/- | TSW | 01/86 ▸ 09/90 | 1643537 | **730117** | 602 | 322 | ALM |
| 1.4,1.4 i | E | 1392 | FU,FUA | M | - | TSW | 01/86 ▸ 10/87 | 6148704 | •**731594** | 601 | 322 | ALM |
| 1.4,1.4 i GAF | E | 1392 | FU,FUA | M | | TSW | 01/86 ▸ 09/90 | 6184413 | **730117** | 602 | 322 | ALM |
| 1.4 | E | 1392 | FUA | M | +/- | TSW | 01/86 ▸ 09/90 | 1643537 | **730117** | 602 | 322 | ALM |
| 1.6,1.6 i | E | 1597 | LRB,LUC | M | +/- | TSW | 01/86 ▸ 09/90 | 1643537 | **730117** | 602 | 322 | ALM |
| 1.6,1.6 i | E | 1597 | LRB,LUC | M | - | TSW | 01/86 ▸ 10/87 | 6148704 | •**731594** | 601 | 322 | ALM |
| 1.6,1.6 i | E | 1597 | LRB,LUC | M | | TSW | 01/86 ▸ 09/90 | 6184413 | **730117** | 602 | 322 | ALM |
| 1.6 | E | 1597 | LUC | A | +/- | | 01/86 ▸ 09/90 | 1643538 | | 602 | 272 | CBS |

# FORD (.../...)

## ESCORT (86>90) (.../...)

| Type Ctr. | | CC | | | AC | | 2+3 | OE | Valeo | DIM. | TECH |
|---|---|---|---|---|---|---|---|---|---|---|---|
| 1.6 | E | 1597 | LUC | A | | | 01/86 ▸ 09/90 | 6184415 | | 602 272 | CBS |
| 1.6 | E | 1597 | LUC | A | | | 01/86 ▸ 10/87 | 6148706 | | 602 272 | CBS |
| 1.6 Turbo | E | 1597 | LNB | M | +/- | | 01/86 ▸ 09/90 | 1638622 | | 490 305 | CBS |
| 1.6 D | D | 1608 | LT | M | +/- | TSW | 01/86 ▸ 07/89 | 1643537 | **730117** | 602 322 | ALM |
| 1.6 D | D | 1608 | LT | M | +/- | PIP+ TSW | 07/89 ▸ 1989 | 6525326 | **731595** | 601 322 | ALM |
| 1.6 D | D | 1608 | LT | M | - | TSW | 01/86 ▸ 1989 | 6184414 | **•731594** | 601 322 | ALM |
| 1.8 D | D | 1753 | RT | M | +/- | TSW | 08/88 ▸ 07/89 | 1643537 | **730117** | 602 322 | ALM |
| 1.8 D | D | 1753 | RT | M | +/- | PIP+ TSW | 07/89 ▸ 09/90 | 6525326 | **731595** | 601 322 | ALM |
| 1.8 D | D | 1753 | RT | M | - | TSW | 08/88 ▸ 07/89 | 6184414 | **•731594** | 601 322 | ALM |
| 1.8 D | D | 1753 | RT | M | | PIP+ TSW | 08/88 ▸ 09/90 | 6525327 | **731595** | 601 322 | ALM |

## ESCORT (90>94)

| Type Ctr. | | CC | | | AC | | 2+3 | OE | Valeo | DIM. | TECH |
|---|---|---|---|---|---|---|---|---|---|---|---|
| 1.1 ABL | E | 1118 | GUF | M | +/- | | 09/90 ▸ 03/91 | 1106768 | | 500 287 | CBS |
| 1.1 ABL | E | 1118 | GUF | M | | | 09/90 ▸ 03/91 | 6616482 | | 500 287 | CBS |
| 1.3,1.3 i AAL//AA/XF ; ABL//AA XE ; AVL ; ANL//XE | E | 1299 | J6A,JBD,JBE | M | +/- | | 09/90 ▸ 12/94 | 1106768 | | 500 287 | CBS |
| 1.3,1.3 i AAL//AA/XF ; ABL//AA XE ; AVL ; ANL//XE | E | 1299 | J6A,JBD,JBE | M | | | 09/90 ▸ 12/94 | 6616482 | | 500 287 | CBS |
| 1.4,1.4 i AAL/BC/CC/CH ALLCG ; ABL/BC/CC/CH ; ANL/3L/BE/CC ; AVL CC | E | 1392 | F6F,F6G,FUH | M | + | +PIP TSW | 09/90 ▸ 12/94 | 6912233 | **730856** | 600 377,5 | ALM |
| 1.4,1.4 i AAL/BC/CC/CH ALLCG ; ABL/BC/CC/CH ; ANL/3L/BE/CC ; GAL AVL//CC | E | 1392 | F4B,F6F,F6G,FUH | M | + | +PIP TSW | 09/90 ▸ 12/94 | 6912237 | **730856** | 600 377,5 | ALM |
| 1.4,1.4 i AAL/BC/CC/CH ALLCG ; ABL/BC/CC/CH ; ANL/3L/BE/CC ; GAL AVL//CC | E | 1392 | F4B,F6F,F6G,FUH | M | - | TSW | 09/90 ▸ 12/94 | 6912232 | **730857** | 500 322 | ALM |
| 1.6,1.6 i AAL/DC/FC/GC ; ABL DC/FC/GC ; ALL//GG ; ANL/DF/FF/GC | E | 1597 | LJE,LJF,LUJ,LUK | M | + | +PIP TSW | 09/90 ▸ 12/94 | 6912237 | **730856** | 600 377,5 | ALM |
| 1.6,1.6 i AAL/DC/FC/GC/WL ABL/DC/FC/GC/WK ; ALL//GG/WL ; GAL ; ANL/DF FF/GC/WL | E | 1597 | L1E,L1H,L1K,LJE,LJF,LUJ,LUK | M | + | +PIP TSW | 09/90 ▸ 12/94 | 6912233 | **730856** | 600 377,5 | ALM |
| 1.6,1.6 i AAL/DC/FC/GC ; ABL DC/FC/GC ; ALL//GG ; ANL/DF/FF/GC | E | 1597 | LJE,LJF,LUJ,LUK | M | - | TSW | 09/90 ▸ 12/94 | 6912232 | **730857** | 500 322 | ALM |
| 1.6 i ABLWK ; AAL/WL ; ANLWL ; GAL ; ALL//WL | E | 1597 | L1E,L1H,L1K | M | - | +PIP TSW | 09/92 ▸ 12/94 | 6912237 | **730856** | 600 377,5 | ALM |
| 1.6 i AAL | E | 1597 | L1E | A | +/- | | 09/92 ▸ 12/94 | 1014480 | | 525 360 | ALB |
| 1.6 AALEE | E | 1597 | LUK | A | + | +PIP TSW | 09/90 ▸ 12/94 | 6912237 | **730856** | 600 377,5 | ALM |
| 1.6 AALEE | E | 1597 | LUK | A | - | TSW | 09/90 ▸ 12/94 | 6912232 | **730857** | 500 322 | ALM |
| 1.8 i AAL/RH/RL ; ALLRH ; ANLSK ; ABL//RK/SE | E | 1796 | RDA,RQB | M | +/- | +PIP TSW | 01/92 ▸ 12/94 | 6912233 | **730856** | 600 377,5 | ALM |
| 1.8 i ALLTK ; ABL/RK/SH/TL | E | 1796 | RDA,RQB | M | +/- | +PIP TSW | 01/92 ▸ 12/94 | 6616483 | **730856** | 600 377,5 | ALM |
| 1.8 i AAL/RH/RL ; ABL//RK/SE/SH/TH/TL ; ANLSK ALL/RH/TK | E | 1796 | RDA,RQB | M | + | +PIP TSW | 01/92 ▸ 12/94 | 6912234 | **730856** | 600 377,5 | ALM |
| 1.8 i ALLTK ; ABL/SH/TH/TL | E | 1796 | RQB | M | - | +PIP TSW | 01/92 ▸ 12/94 | 1664633 | **730856** | 600 377,5 | ALM |
| 1.8 i AAL | E | 1796 | RDA | A | +/- | | 01/92 ▸ 12/94 | 1014480 | | 525 360 | ALB |
| 1.8 i AAL | E | 1796 | RDA | A | | +PIP TSW | 01/92 ▸ 12/94 | 6912233 | **730856** | 600 377,5 | ALM |
| 2.0 i 16V ABL/4Y0/LF/LL | E | 1998 | N7A | M | + | +PIP TSW | 02/91 ▸ 12/94 | 6912233 | **730856** | 600 377,5 | ALM |
| 2.0 i 16V ABL/4Y0/LF/LL | E | 1998 | N7A | M | - | +PIP TSW | 02/91 ▸ 12/94 | 6912234 | **730856** | 600 377,5 | ALM |
| 1.8 D AAL/HF/HL ; ANLHH ; AVL68 ; ABL/D/HK | D | 1753 | RTE | M | + | TSW | 09/90 ▸ 12/94 | 1029459 | **731300** | 525 365 | CBS |
| 1.8 TD AALIM ; ANLIM | D | 1753 | RFD | M | + | TSW | 07/93 ▸ 12/94 | 6792788 | **731300** | 525 365 | CBS |
| 1.8 TD AALIM ; ANLIM | D | 1753 | RFD | M | - | TSW | 07/93 ▸ 12/94 | 1029459 | **731300** | 525 365 | CBS |

## ESCORT (95>2001)

| Type Ctr. | | CC | | | AC | | 2+3 | OE | Valeo | DIM. | TECH |
|---|---|---|---|---|---|---|---|---|---|---|---|
| 1.3 i AAL/6F ; ABL/6E/XE ; AVL ; ANL//6H | E | 1299 | J4,J6A | M | +/- | | 01/95 ▸ 09/01 | 6616482 | | 500 287 | CBS |
| 1.3 i AAL/6F ; ABL/6E/XE ; AVL ; ANL//6H | E | 1299 | J4,J6A | M | +/- | | 10/99 ▸ 09/01 | 1106768 | | 500 287 | CBS |
| 1.3 i AALXE ; AFLXE | E | 1299 | J6A | M | | | 10/99 ▸ 09/01 | 1106768 | | 500 287 | CBS |
| 1.4 i ABL3H ; AFL3J ; ALL3K ; ANL3L ; AVL3 ; AAL 3J | E | 1392 | F4B | M | +/- | +PIP TSW | 01/95 ▸ 09/01 | 6912233 | **730856** | 600 377,5 | ALM |
| 1.6 i ABL | E | 1597 | L1E | M | +/- | | 03/95 ▸ 08/96 | 1014480 | | 525 360 | ALB |

Radiator Ψυγείο Vodní chladič Radiator vízhűtő Радиатор Radiador Radiator Radyatör Radiator Radiatore di raffreddamento Motorkühler Radiateur Radiator



• **New** Nouveau **Nuevo** Novo **Nuovo** Nieuw **Neu** Nowość **Yeni** Новый Νέο **Novy**

# FORD (.../...)

## ESCORT (95>2001) (.../...)

| | | | CC | | AC | | | OE | Valeo | DIM. | TECH |
|---|---|---|---|---|---|---|---|---|---|---|---|
| 1.6 i | ABLWK ; AFLWL ; ALLWM ; AAL/WL ; ANL//WM | E | 1597 | L1H,L1K | M | + | +PIP TSW | 01/95 ▸ 09/01 | 6912233 | **730856** | 600 377,5 | ALM |
| 1.6 i | ABLWK ; AFLWL ; ALLWM ; ANLWM ; AAL/WL | E | 1597 | L1H,L1K | M | +/- | +PIP TSW | 01/95 ▸ 09/01 | 6912237 | **730856** | 600 377,5 | ALM |
| 1.6 i | ABLAM ; AFLAM ; ALLAN ; ANLAN ; AAL/AM | E | 1597 | L1K | A | +/- | | 01/95 ▸ 08/97 | 1014480 | | 525 360 | ALB |
| 1.6 i | ABLAM ; AFLAM ; ALLAN ; ANLAN ; AAL/AM | E | 1597 | L1K | A | | +PIP TSW | 08/97 ▸ 09/01 | 6912233 | **730856** | 600 377,5 | ALM |
| 1.8 i | ABL9M ; AFL9M ; AAL/9M ; ANL9M ; ALL//90 | E | 1796 | RKC,RQB | M | + | +PIP TSW | 01/95 ▸ 08/97 | 6912234 | **730856** | 600 377,5 | ALM |
| 1.8 i | ABL9M ; AFL9M ; AAL/9M ; ANL9M ; ALL//90 | E | 1796 | RDA,RKC,RQB | M | +/- | +PIP TSW | 01/95 ▸ 08/97 | 6912233 | **730856** | 600 377,5 | ALM |
| 2.0 i 16V | ABL//4Y0 | E | 1998 | N7A | M | + | +PIP TSW | 08/95 ▸ 08/96 | 6912234 | **730856** | 600 377,5 | ALM |
| 2.0 i 16V | ABL//4Y0 | E | 1998 | N7A | M | - | +PIP TSW | 08/95 ▸ 08/96 | 6912233 | **730856** | 600 377,5 | ALM |
| 1.8 TD | AAL/1M/BN ; ABL/1L BN ; AFL/1L/BN ; AVL18 ; ANL/1N/BN | D | 1753 | RFD,RV | M | +/- | TSW | 01/95 ▸ 12/96 | 6912239 | **731300** | 525 365 | CBS |
| 1.8 TD | AAL/1M/97/BN ; ABL 1L/97/BN/BNC ; AFL/1L/97/BN ; AVL18 ; ANL/1N 97/BN | D | 1753 | RFD,RFS,RV | M | +/- | TSW | 01/95 ▸ 09/01 | 1029459 | **731300** | 525 365 | CBS |
| 1.8 D | AAL/7L ; AFL7K ; ANL7N ; AVL ; ABL/7K/7KC | D | 1753 | RTH | M | + | TSW | 01/95 ▸ 12/96 | 6912239 | **731300** | 525 365 | CBS |
| 1.8 D | AAL/7L ; AFL7K ; ANL7N ; AVL ; ABL/7K/7KC | D | 1753 | RTH | M | + | TSW | 01/95 ▸ 09/01 | 1029459 | **731300** | 525 365 | CBS |
| 1.8 TD | ALL/ ; ANL//BN | D | 1753 | RFD,RV | M | | TSW | 08/95 ▸ 09/01 | 1029459 | **731300** | 525 365 | CBS |

## FIESTA (76>83)

| | | | | | | | | | | | |
|---|---|---|---|---|---|---|---|---|---|---|---|
| 0.9 | E | 957 | TKA | M | - | | 06/76 ▸ 08/83 | 6122462 | **883954** | 500 229 | ALM |
| 1.1 | E | 1117 | GL-CVH | M | - | | 06/76 ▸ 08/83 | 6122462 | **883954** | 500 229 | ALM |
| 1.3 | E | 1296 | J3E | M | - | | 03/77 ▸ 08/83 | 6122463 | | 500 229 | ALM |
| 1.6 | E | 1597 | L3A | M | - | | 10/81 ▸ 08/83 | 6122463 | | 500 229 | ALM |

## FIESTA (83>89)

| | | | | | | | | | | | |
|---|---|---|---|---|---|---|---|---|---|---|---|
| 0.9 | E | 957 | TKB,TLA | M | - | | 08/83 ▸ 1989 | 1619143 | **883956** | 500 229 | ALM |
| 1.1 FBD ; FVD | E | 1117 | GL-CVH | M | - | | 08/83 ▸ 1989 | 6134546 | **883956** | 500 229 | ALM |
| 1.1 FBD | E | 1117 | GL-CVH | A | - | | 02/86 ▸ 1989 | 1619143 | **883956** | 500 229 | ALM |
| 1.3 | E | 1296 | JP | M | - | | 08/83 ▸ 12/85 | 6134546 | **883956** | 500 229 | ALM |
| 1.4 | E | 1392 | FUA | M | - | TSW | 01/86 ▸ 1989 | 6154176 | **730116** | 495 290 | CBS |
| 1.6 | E | 1597 | LU,LUC | M | - | TSW | 02/84 ▸ 1989 | 6154176 | **730116** | 495 290 | CBS |
| 1.6 D | D | 1608 | LTB | M | - | TSW | 02/84 ▸ 01/86 | 6154176 | **730116** | 495 290 | CBS |
| 1.6 D | D | 1608 | LTB | M | - | TSW | 01/86 ▸ 1989 | 6160667 | **730116** | 495 290 | CBS |

## FIESTA (89>95)

| | | | | | | | | | | | |
|---|---|---|---|---|---|---|---|---|---|---|---|
| 1.0 FBJKZ ; FAJ/KA/KZ | E | 999 | TLB | M | - | | 04/89 ▸ 01/94 | 1654321 | | 500 322 | ALM |
| 1.0 FBJKZ ; FAJ/KA/KZ | E | 999 | TLB | M | - | TSW | 04/89 ▸ 01/94 | 1107118 | **730483** | 500 322 | ALM |
| 1.1,1.1 i FAJ/1B/2C/2D/2F/AB BB/KC/KD/KF ; FBJ/1A/1B/2B/2C/2E/AA/BA/BB/KB KC/KE | E | 1118 | G6A,GUE | M | - | TSW | 02/89 ▸ 07/95 | 1654321 | **730483** | 500 322 | ALM |
| 1.1 FAJCB ; FBJCA | E | 1118 | GUE | A | +/- | | 02/89 ▸ 12/92 | 1107119 | | 494 283 | CBS |
| 1.1 FAJCB ; FBJCA | E | 1118 | GUE | A | - | | 02/89 ▸ 12/92 | 6662518 | | 494 283 | CBS |
| 1.1 FAJCB ; FBJCA | E | 1118 | GUE | A | | | 02/89 ▸ 12/92 | 1004043 | | 494 283 | CBS |
| 1.3,1.3 i FAJ/WD/WF/XD ; FBJ WC/WE/XC | E | 1299 | J6B,JBC | M | - | | 02/89 ▸ 07/95 | 1654321 | | 500 322 | ALM |
| 1.3,1.3 i FAJ/WD/WF/XD ; FBJ WC/WE/XC | E | 1299 | J6B,JBC | M | - | TSW | 02/89 ▸ 07/95 | 1107118 | **730483** | 500 322 | ALM |
| 1.3 i FBJZC ; FAJ/ZC/ZD/ZF | E | 1299 | J6B | A | +/- | | 04/91 ▸ 07/95 | 1107119 | | 494 283 | CBS |
| 1.3 i FBJZC ; FAJ/ZC/ZD/ZF | E | 1299 | J6B | A | - | | 04/91 ▸ 07/95 | 6662518 | | 494 283 | CBS |
| 1.3 i FBJZC ; FAJ/ZC/ZD/ZF | E | 1299 | J6B | A | | | 04/91 ▸ 07/95 | 1004043 | | 494 283 | CBS |
| 1.4,1.4 i FAJ/DC/LC/MC/MD/ME FBJ/DB/LB/MB/MC/MD | E | 1392 | F6E,FUF | M | - | TSW | 02/89 ▸ 05/91 | 6479789 | **730484** | 500 322 | ALM |
| 1.4 FAJEC ; FBJEB | E | 1392 | FUF | A | +/- | | 02/89 ▸ 05/91 | 1107119 | | 494 283 | CBS |
| 1.6,1.6 i FAJ/FC ; FBJ//FB/GE | E | 1597 | LJC,LJD,LUH | M | - | TSW | 02/89 ▸ 01/94 | 6632236 | **730484** | 500 322 | ALM |
| 1.6 i Turbo FBJTTF | E | 1597 | LNA | M | +/- | | 05/90 ▸ 03/92 | 1661017 | | 600 330 | ALB |
| 1.6 i 16V FAJ6I ; FBJ6I | E | 1597 | L1G | M | - | TSW | 02/94 ▸ 07/95 | 7138825 | **731299** | 500 286 | ALB |
| 1.6,1.6 i FAJ/FC ; FBJ//FB/GE | E | 1597 | LJC,LJD,LUH | M | - | TSW | 02/89 ▸ 01/94 | 6791562 | **730484** | 500 322 | ALM |
| 1.6,1.6 i,1.6 i Turbo FAJ/FC ; FBJ//FB/GE TTF | E | 1597 | LJC,LJD,LNA,LUH | M | - | TSW | 02/89 ▸ 01/94 | 7138824 | **730484** | 500 322 | ALM |
| 1.8 i 16V FAJ/3G/4J ; FBJ//4G 4H | E | 1796 | RDB,RQC | M | - | TSW | 02/92 ▸ 07/95 | 7138825 | **731299** | 500 286 | ALB |
| 1.8 D,1.8 TD FAJ/JF/NF/NG/TF/VG FBJ/JE/NE/TE/VE ; FVJ/8/9/9D | D | 1753 | RFE,RTC,RTD | M | - | TSW | 02/89 ▸ 12/93 | 6632236 | **730484** | 500 322 | ALM |

# FORD (.../...)

## FIESTA (89>95) (.../...)

| | | | CC | | | AC | | | OE | Valeo | DIM. | TECH |
|---|---|---|---|---|---|---|---|---|---|---|---|---|
| 1.8 D,1.8 TD | FAJ/NF/NG/NI/TF/VG FBJ/NE/NH/TE/VE ; FVJ/8/9/9D | D | 1753 | RFE,RTC,RTD | M | - | TSW | 07/89 ▸ 07/95 | 7138824 | 730484 | 500 322 | ALM |
| 1.8 D,1.8 TD | FAJ/JF/NF/NG/TF/VG FBJ/JE/NE/TE/VE ; FVJ/8/9/9D | D | 1753 | RFE,RTC,RTD | M | - | TSW | 02/89 ▸ 12/93 | 6791562 | 730484 | 500 322 | ALM |

## FIESTA (95>99)

| | | | | | | | | | | | | |
|---|---|---|---|---|---|---|---|---|---|---|---|---|
| 1.0 i | JBSC4 | E | 999 | C4 | M | + | | 05/96 ▸ 04/99 | 1001856 | 731617 | 500 359 | ALM |
| 1.0 i | JBSC4 | E | 999 | C4 | M | - | | 05/96 ▸ 04/99 | 1001855 | 731734 | 500 303 | ALM |
| 1.0 i | JAS ; JBS | E | 999 | TD | M | - | | 05/99 ▸ 08/99 | 1092360 | 732626 | 500 359 | ALM |
| 1.1 i | FAJ2F ; FBJ2E | E | 1118 | G6A | M | + | | 08/95 ▸ 09/96 | 1001856 | 731617 | 500 359 | ALM |
| 1.1 i | FAJ2F ; FBJ2E | E | 1118 | G6A | M | - | | 08/95 ▸ 09/96 | 1001855 | 731734 | 500 303 | ALM |
| 1.2 i 16V | JASDHA ; JBSDHA | E | 1242 | DHA | M | + | TSW | 08/95 ▸ 09/99 | 1001859 | 731736 | 525 377,5 | ALM |
| 1.2 i 16V | JASDHA ; JBSDHA | E | 1242 | DHA | M | - | TSW | 08/95 ▸ 09/99 | 1001857 | 731735 | 530 285 | ALM |
| 1.2 i 16V | JASDHA | E | 1242 | DHA | A | - | | 08/95 ▸ 08/99 | 1001858 | | 500 360 | CBS |
| 1.3 i | JAS/J4C/JJA ; JBS/J4C/JJA ; JVS/J4C/JJA | E | 1299 | J4C,JJA | M | + | | 08/95 ▸ 08/99 | 1001856 | 731617 | 500 359 | ALM |
| 1.3 i | JAS/J4C/JJA ; JBS/J4C/JJA ; JVS/J4C/JJA | E | 1299 | J4C,JJA | M | - | | 08/95 ▸ 08/99 | 1001855 | 731734 | 500 303 | ALM |
| 1.4 i 16V | JASFHA ; JBSFHA | E | 1388 | FHA | M | +/- | TSW | 01/96 ▸ 08/99 | 1001859 | 731736 | 525 377,5 | ALM |
| 1.4 i 16V | JASFHA ; JBSFHA ; J5 | E | 1388 | FHA | M | | TSW | 01/96 ▸ 08/99 | 1098807 | 731736 | 525 377,5 | ALM |
| 1.8 D | JAS/RTJ/RTK ; JBS/RTJ/RTK ; JVS/RTJ/RTK | D | 1753 | RTJ,RTK | M | +/- | TSW | 08/95 ▸ 08/99 | 1042588 | 732003 | 525 377,5 | ALM |

## FIESTA (99>2002)

| | | | | | | | | | | | | |
|---|---|---|---|---|---|---|---|---|---|---|---|---|
| 1.2 i 16V | JAS ; JBS | E | 1242 | DHB,DHC | M | + | TSW | 08/99 ▸ 03/02 | 1098807 | 731736 | 525 377,5 | ALM |
| 1.2 i 16V | JAS ; JBS | E | 1242 | DHB,DHC | M | - | TSW | 08/99 ▸ 03/02 | 1111384 | 731735 | 530 285 | ALM |
| 1.2 i 16V | JAS ; JBS | E | 1242 | DHB,DHC | M | - | TSW | 08/99 ▸ 02/00 | 1098809 | 731735 | 530 285 | ALM |
| 1.3 i | JAS ; JBS | E | 1299 | J4J,J4L,JJC,JJE | M | + | | 08/99 ▸ 03/02 | 1098806 | 731617 | 500 359 | ALM |
| 1.3 i | JAS ; JBS | E | 1299 | J4J,J4L,JJC,JJE | M | - | | 08/99 ▸ 03/02 | 1098808 | 731734 | 500 303 | ALM |
| 1.4 i 16V | JAS ; JBS | E | 1388 | FHA,FHE | M | + | TSW | 08/99 ▸ 03/02 | 1098807 | 731736 | 525 377,5 | ALM |
| 1.4 i 16V | JAS ; JBS | E | 1388 | FHA,FHE | M | - | TSW | 08/99 ▸ 03/02 | 1111384 | 731735 | 530 285 | ALM |
| 1.6 i | JAS ; JBS | E | 1596 | ZL16 | M | + | | 10/99 ▸ 03/02 | 1092370 | 732625 | 498,6 359 | ALB |
| 1.6 i | JAS ; JBS | E | 1596 | ZL16 | M | - | | 10/99 ▸ 03/02 | 1092360 | 732626 | 500 359 | ALM |
| 1.8 D,1.8 TDdi | JAS//RTJ ; JBS//RTJ | D | 1753 | DI-TD,RTK | M | +/- | TSW | 09/99 ▸ 03/02 | 1042588 | 732003 | 525 377,5 | ALM |

## FIESTA (2002>2005)

| | | | | | | | | | | | | |
|---|---|---|---|---|---|---|---|---|---|---|---|---|
| 1.2 i 16V | NH | E | 1242 | 1.25 ZETEC-S,1.25 ZETEC-S/DU | M | +/- | | 02/03 ▸ 08/05 | 1325831 | 734273 | 500 356 | ALB |
| 1.2 i 16V | NH | E | 1242 | 1.25 ZETEC-S,1.25 ZETEC-S/DU | M | +/- | | 02/03 ▸ 01/04 | 1222562 | 734273 | 500 356 | ALB |
| 1.3 i | NH | E | 1299 | BAJA,DURATEC 1.3 EFI | M | +/- | | 03/02 ▸ 03/04 | 1214784 | 734272 | 508 377,5 | ALB |
| 1.3 i | NH | E | 1299 | BAJA,DURATEC 1.3 EFI | M | +/- | | 03/02 ▸ 08/05 | 1325832 | 734272 | 508 377,5 | ALB |
| 1.4 i 16V | NH | E | 1388 | ZETEC-S 1.4 EFI | M | +/- | | 03/02 ▸ 08/05 | 1325831 | 734273 | 500 356 | ALB |
| 1.4 i 16V | NH | E | 1388 | ZETEC-S 1.4 EFI | M | +/- | | 03/02 ▸ 01/04 | 1222562 | 734273 | 500 356 | ALB |
| 1.4 i 16V | NH | E | 1388 | ZETEC-S 1.4 EFI | M | | | 03/02 ▸ | 1141490 | 734273 | 500 356 | ALB |
| 1.6 i 16V | NH | E | 1596 | ZETEC-S 1.6 EFI | M | +/- | | 03/02 ▸ 08/05 | 1325831 | 734273 | 500 356 | ALB |
| 1.6 i 16V | NH | E | 1596 | ZETEC-S 1.6 EFI | M | +/- | | 03/02 ▸ 01/04 | 1222562 | 734273 | 500 356 | ALB |
| 1.6 i 16V | NH | E | 1596 | ZETEC-S 1.6 EFI | M | | | 03/02 ▸ | 1141490 | 734273 | 500 356 | ALB |
| 1.6 i 16V | NH | E | 1596 | ZETEC-S 1.6 EFI | A | +/- | | 03/02 ▸ 01/04 | 1222562 | 734273 | 500 356 | ALB |
| 1.6 i 16V | NH | E | 1596 | ZETEC-S 1.6 EFI | A | +/- | | 03/02 ▸ 08/05 | 1325831 | 734273 | 500 356 | ALB |
| 2.0 i 16V | NH | E | 1999 | NAJB | M | +/- | | 01/05 ▸ 08/05 | 1363013 | 735045 | 500 358 | ALB |
| 1.4 TDCi | NH | D | 1399 | F6JA | M | +/- | | 03/02 ▸ 08/05 | 1325830 | 734274 | 508 377,5 | ALB |
| 1.4 TDCi | NH | D | 1399 | F6JA | M | + | | 03/02 ▸ 06/02 | 1325830 | 734274 | 508 377,5 | ALB |
| 1.4 TDCi | NH | D | 1399 | F6JA | M | - | | 03/02 ▸ 06/02 | 1359798 | 734274 | 508 377,5 | ALB |
| 1.6 TDCi 16V | NH | D | 1560 | HHDA/B | M | +/- | | 11/04 ▸ 08/05 | 1334250 | | 593 379 | ALB |

## FIESTA (2005>2008)

| | | | | | | | | | | | | |
|---|---|---|---|---|---|---|---|---|---|---|---|---|
| 1.2 i 16V | | E | 1242 | 1.25 ZETEC-S/DU | M | | | 10/05 ▸ 11/08 | 1325831 | 734273 | 500 356 | ALB |
| 1.3 i | | E | 1299 | BAJA,DURATEC 1.3 EFI | M | | | 10/05 ▸ 11/08 | 1325832 | 734272 | 508 377,5 | ALB |
| 1.4 i 16V | | E | 1388 | ZETEC-S 1.4 EFI | M | +/- | | 10/05 ▸ 11/08 | 1325831 | 734273 | 500 356 | ALB |
| 1.6 i 16V | | E | 1596 | ZETEC-S 1.6 EFI | M | +/- | | 10/05 ▸ 11/08 | 1325831 | 734273 | 500 356 | ALB |
| 1.6 i 16V | | E | 1596 | ZETEC-S 1.6 EFI | A | +/- | | 10/05 ▸ 11/08 | 1325831 | 734273 | 500 356 | ALB |
| 2.0 i 16V | | E | 1999 | NAJB | M | +/- | | 10/05 ▸ 11/08 | 1363013 | 735045 | 500 358 | ALB |
| 1.4 TDCi | | D | 1399 | F6JC | M | +/- | | 10/05 ▸ 05/06 | 1325830 | 734274 | 508 377,5 | ALB |
| 1.4 TDCi | | D | 1399 | F6JC | M | | | 10/05 ▸ 05/06 | 1325830 | 734274 | 508 377,5 | ALB |
| 1.6 TDCi 16V | | D | 1560 | HHJA/B | M | +/- | | 10/05 ▸ 11/08 | 1334250 | | 593 379 | ALB |

## FIESTA (2008>)

| | | | | | | | | | | | | |
|---|---|---|---|---|---|---|---|---|---|---|---|---|
| 1.4 i 16V | | E | 1388 | 1.4 ZC-S PFI | A | +/- | | | 1671561 | •735379 | 558,5 350 | ALB |
| 1.4 TDCi | | D | 1399 | 1.4 DC TDCI | M | +/- | | | 1671390 | •735378 | 558,5 350 | ALB |
| 1.6 TDCi 16V | | D | 1560 | 1.6 DURATORQ/F | M | +/- | | | 1671390 | •735378 | 558,5 350 | ALB |

## FOCUS (98>2001)

| | | | | | | | | | | | | |
|---|---|---|---|---|---|---|---|---|---|---|---|---|
| 1.8 GPLi 16V | DAW ; DNW | G | 1796 | ZH18 | M | | TSW | 10/00 ▸ 10/01 | 1132655 | 732732 | 610 377,5 | ALM |

Radiator Radiateur Motorkühler Radiatore di raffreddamento Radyatör Radiator Радиатор Radiador Vízhűtő Vodní chladič Radiator Ψυγείο



• **New** Nouveau **Nuevo** Novo **Nuovo** Nieuw **Neu** Nowość **Yeni** Новый Νέο **Nový**

# FORD (.../...)

## FOCUS (98>2001) (.../...)

| Type Ctr. | | CC | | | AC | | | OE | Valeo | DIM. | TECH |
|---|---|---|---|---|---|---|---|---|---|---|---|
| 1.4 i 16V DBW ; DFW ; DNW DAW | E | 1388 | FXDA,FXDC | M | + | TSW | 10/98 ▸ 10/01 | 1061180 | 732732 | 610 377,5 | ALM |
| 1.4 i 16V DBW ; DFW ; DNW DAW | E | 1388 | FXDA,FXDC | M | - | TSW | 10/98 ▸ 10/01 | 1132658 | 732731 | 460 377,5 | ALM |
| 1.4 i 16V DBW ; DFW ; DNW DAW | E | 1388 | FXDA,FXDC | M | | TSW | 10/98 ▸ 10/01 | 1093713 | 732731 | 460 377,5 | ALM |
| 1.6 i 16V DBW ; DFW ; DNW DAW | E | 1596 | FYDA,FYDC | M | + | TSW | 10/98 ▸ 10/01 | 1093711 | 732732 | 610 377,5 | ALM |
| 1.6 i 16V DBW ; DFW ; DNW DAW | E | 1596 | FYDA,FYDC | M | - | TSW | 10/98 ▸ 10/01 | 1132658 | 732731 | 460 377,5 | ALM |
| 1.6 i 16V DBW ; DFW ; DNW DAW | E | 1596 | FYDA,FYDC | M | | TSW | 10/98 ▸ 10/01 | 1093713 | 732731 | 460 377,5 | ALM |
| 1.6 i 16V DAW ; DNW | E | 1596 | FYDA | M | | TSW 819785 | 10/98 ▸ 10/01 | 1093458 | 735046 | 600 367 | ALB |
| 1.6 i 16V DBW ; DFW ; DNW DAW | E | 1596 | FYDA,FYDC | A | +/- | TSW 819785 | 10/98 ▸ 10/01 | 1093458 | 735046 | 600 367 | ALB |
| 1.6 i 16V DBW ; DFW ; DNW DAW | E | 1596 | FYDA,FYDC | A | + | TSW | 10/98 ▸ 10/01 | 1061180 | 732732 | 610 377,5 | ALM |
| 1.6 i 16V DBW ; DFW ; DNW DAW | E | 1596 | FYDA,FYDC | A | - | TSW | 10/98 ▸ 10/01 | 1061185 | 732731 | 460 377,5 | ALM |
| 1.8 i 16V DBW ; DFW ; DNW DAW | E | 1796 | EYDA,EYDC | M | +/- | TSW | 10/98 ▸ 10/01 | 1061180 | 732732 | 610 377,5 | ALM |
| 1.8 i 16V DBW ; DFW ; DNW DAW | E | 1796 | EYDA,EYDC | M | + | TSW | 10/98 ▸ 10/01 | 1132655 | 732732 | 610 377,5 | ALM |
| 1.8 i 16V DFW | E | 1796 | EYDA | A | +/- | TSW | 10/98 ▸ 10/01 | 1093711 | 732732 | 610 377,5 | ALM |
| 1.8 i 16V DFW | E | 1796 | EYDA | A | +/- | TSW 819785 | 10/98 ▸ 10/01 | 1093458 | 735046 | 600 367 | ALB |
| 2.0 i 16V DBW ; DFW ; DNW DAW | E | 1988 | EDDA,EDDC | M | +/- | TSW | 10/98 ▸ 10/01 | 1061192 | 732735 | 610 377,5 | ALM |
| 1.8 TDCi,1.8 TDi DAY ; DBW ; DBY DFW ; DFY ; DNW ; DAW | D | 1753 | 1.8 TC LYNX,BHDA/B,C9DA/B/C,FFDA | M | +/- | TSW | 10/98 ▸ 10/01 | 1091934 | 732735 | 610 377,5 | ALM |
| 1.8 TDCi DNW ; DNY ; DBW | D | 1753 | 1.8 TC LYNX,FFDA | M | + | TSW | 05/01 ▸ 10/01 | 1091934 | 732735 | 610 377,5 | ALM |

## FOCUS (2001>2003)

| | | | | | | | | | | | |
|---|---|---|---|---|---|---|---|---|---|---|---|
| 1.4 i 16V DBW ; DFW ; DNW DAW | E | 1388 | FXDA,FXDC | M | + | TSW | 11/01 ▸ 08/04 | 1132655 | 732732 | 610 377,5 | ALM |
| 1.4 i 16V DBW ; DFW ; DNW DAW | E | 1388 | FXDA,FXDC | M | - | TSW | 11/01 ▸ 08/04 | 1132658 | 732731 | 460 377,5 | ALM |
| 1.6 i 16V DBW ; DFW ; DNW DAW | E | 1596 | FYDA,FYDC | M | + | TSW | 11/01 ▸ 08/04 | 1132655 | 732732 | 610 377,5 | ALM |

## FOCUS (2001>)

| | | | | | | | | | | | |
|---|---|---|---|---|---|---|---|---|---|---|---|
| 1.6 i DAW ; DFW | E | 1596 | 16LSEZ | M | + | | 09/02 ▸ 05/05 | 1213022 | •732962 | 600 359 | ALM |

## FOCUS (2001>2003)

| | | | | | | | | | | | |
|---|---|---|---|---|---|---|---|---|---|---|---|
| 1.6 i 16V DBW ; DFW ; DNW DAW | E | 1596 | FYDA,FYDC | M | - | TSW | 11/01 ▸ 08/04 | 1132658 | 732731 | 460 377,5 | ALM |
| 1.6 i DAW ; DFW | E | 1596 | 16LSEZ | M | | TSW | 09/02 ▸ 08/04 | 1132655 | 732732 | 610 377,5 | ALM |
| 1.6 i 16V DBW ; DFW ; DNW DAW | E | 1596 | FYDA,FYDC | A | +/- | TSW 819785 | 11/01 ▸ 08/04 | 1093458 | 735046 | 600 367 | ALB |
| 1.6 i 16V DBW ; DFW ; DNW DAW | E | 1596 | FYDA,FYDC | A | + | TSW | 11/01 ▸ 08/04 | 1132655 | 732732 | 610 377,5 | ALM |
| 1.8 i 16V DAW | E | 1796 | EYDA,EYDC | M | +/- | TSW | 11/01 ▸ 08/04 | 1132655 | 732732 | 610 377,5 | ALM |
| 1.8 i 16V DFW ; DNW ; DBW | E | 1796 | EYDA,EYDC | M | + | TSW | 11/01 ▸ 08/04 | 1132655 | 732732 | 610 377,5 | ALM |
| 1.8 i 16V DFW | E | 1796 | EYDA | A | +/- | TSW 819785 | 11/01 ▸ 08/04 | 1093458 | 735046 | 600 367 | ALB |
| 1.8 i 16V DFW | E | 1796 | EYDA | A | + | TSW | 11/01 ▸ 08/04 | 1132655 | 732732 | 610 377,5 | ALM |
| 2.0 i 16V DAW ; DNW | E | 1988 | EDDA,EDDC | M | +/- | TSW | 11/01 ▸ 08/04 | 1091934 | 732735 | 610 377,5 | ALM |
| 2.0 i 16V,2.0 i Turbo 16V DBW ; DFW ; DNW DAW | E | 1988 | D20RS,EDDA,EDDC,ZH20EST | M | + | TSW | 11/01 ▸ 08/04 | 1091934 | 732735 | 610 377,5 | ALM |
| 1.8 TDCi,1.8 TDdi DAY ; DBW ; DBY DFW ; DFY ; DNW ; DAW | D | 1753 | 1.8 TC LYNX,BHDA/B,C9DA/B/C,FFDA | M | +/- | TSW | 11/01 ▸ 08/04 | 1091934 | 732735 | 610 377,5 | ALM |

## FOCUS (2004>)

| | | | | | | | | | | | |
|---|---|---|---|---|---|---|---|---|---|---|---|
| 1.8 i CNG 16V,1.8 i Flexifuel 16V | F | 1798 | DURA18CNG,Q7DA | M | +/- | | 11/04 ▸ 12/07 | 1354177 | 734320 | 670 377,5 | ALB |
| 1.8 i CNG 16V,1.8 i Flexifuel 16V | F | 1798 | DURA18CNG,Q7DA | M | | TSW | 11/04 ▸ 12/07 | 1132655 | 732732 | 610 377,5 | ALM |
| 1.4 i 16V | E | 1388 | ZETEC-S 1.4 EFI | M | + | | 09/04 ▸ 12/07 | 1354177 | 734320 | 670 377,5 | ALB |
| 1.4 i 16V | E | 1388 | ZETEC-S 1.4 EFI | M | - | | 09/04 ▸ 12/07 | 1354176 | 734319 | 450 376 | ALB |
| 1.6 Ti-VCT 16V,1.6 i 16V | E | 1596 | HWDA/B,HXDA | M | +/- | | 09/04 ▸ 12/07 | 1354177 | 734320 | 670 377,5 | ALB |
| 1.6 Ti-VCT 16V,1.6 i 16V | E | 1596 | HWDA/B,HXDA | M | + | | 09/04 ▸ 12/07 | 1354177 | 734320 | 670 377,5 | ALB |
| 1.6 Ti-VCT 16V,1.6 i 16V | E | 1596 | HWDA/B,HXDA | M | - | | 09/04 ▸ 12/07 | 1354176 | 734319 | 450 376 | ALB |
| 1.6 Ti-VCT 16V | E | 1596 | HXDA | M | | | 09/04 ▸ | 1374402 | 734321 | 670 377,5 | ALB |
| 1.6 Ti-VCT 16V | E | 1596 | HXDA | M | | | 09/04 ▸ 12/07 | 1357325 | 734321 | 670 377,5 | ALB |

# FORD (.../...)

## FOCUS (2004>) (.../...)

| | | CC | | | AC | | | OE | Valeo | DIM. | TECH |
|---|---|---|---|---|---|---|---|---|---|---|---|
| 1.6 i | E | 1596 | 16LSEZ | M | | | 09/04 ▸ 05/05 | 1354177 | **734320** | 670 377,5 | ALB |
| 1.6 Ti-VCT 16V,1.6 i 16V | E | 1596 | HWDA/B,HXDA | A | + | | 09/04 ▸ 12/07 | 1354177 | **734320** | 670 377,5 | ALB |
| 1.6 Ti-VCT 16V,1.6 i 16V | E | 1596 | HWDA/B,HXDA | A | - | | 09/04 ▸ 12/07 | 1354176 | **734319** | 450 376 | ALB |
| 1.6 Ti-VCT 16V | E | 1596 | HXDA | A | | | 09/04 ▸ | 1374402 | **734321** | 670 377,5 | ALB |
| 1.6 Ti-VCT 16V | E | 1596 | HXDA | A | | | 09/04 ▸ 12/07 | 1357325 | **734321** | 670 377,5 | ALB |
| 2.0 i 16V | E | 1999 | 2.0L DURATEC-HE | M | +/- | | 11/04 ▸ 12/07 | 1354177 | **734320** | 670 377,5 | ALB |
| 2.0 i 16V | E | 1999 | 2.0L DURATEC-HE | A | +/- | | 11/04 ▸ 12/07 | 1354177 | **734320** | 670 377,5 | ALB |
| 2.5 i 20V | E | 2521 | 2.5 DURATEC | M | + | | 10/05 ▸ | 1357325 | **734321** | 670 377,5 | ALB |
| 2.5 i 20V | E | 2521 | 2.5 DURATEC | M | | | 10/05 ▸ 12/07 | 1354177 | **734320** | 670 377,5 | ALB |
| 1.6 TDCi 16V | D | 1560 | D16FAP,HHDA/B | M | +/- | | 09/04 ▸ | 1354178 | **734321** | 670 377,5 | ALB |
| 1.6 TDCi 16V | D | 1560 | D16FAP,HHDA/B | M | + | | 09/04 ▸ | 1357325 | **734321** | 670 377,5 | ALB |
| 1.6 TDCi 16V | D | 1560 | D16FAP,HHDA/B | M | | | 09/04 ▸ | 1374402 | **734321** | 670 377,5 | ALB |
| 1.6 TDCi 16V | D | 1560 | D16FAP,HHDA/B | M | | | 09/04 ▸ 12/07 | 1357325 | **734321** | 670 377,5 | ALB |
| 1.6 TDCi 16V | D | 1560 | HHDA/B | A | +/- | | 09/04 ▸ | 1354178 | **734321** | 670 377,5 | ALB |
| 1.6 TDCi 16V | D | 1560 | HHDA/B | A | + | | 09/04 ▸ | 1357325 | **734321** | 670 377,5 | ALB |
| 1.6 TDCi 16V | D | 1560 | HHDA/B | A | | | 09/04 ▸ 12/07 | 1357325 | **734321** | 670 377,5 | ALB |
| 1.6 TDCi 16V | D | 1560 | HHDA/B | A | | | 09/04 ▸ | 1374402 | **734321** | 670 377,5 | ALB |
| 1.8 TDCi | D | 1753 | KKDA | M | + | | 11/04 ▸ | 1357325 | **734321** | 670 377,5 | ALB |
| 1.8 TDCi | D | 1753 | KKDA | M | | | 11/04 ▸ | 1374402 | **734321** | 670 377,5 | ALB |
| 1.8 TDCi | D | 1753 | KKDA | M | | | 11/04 ▸ 12/07 | 1357325 | **734321** | 670 377,5 | ALB |
| 2.0 TDCi 16V | D | 1997 | D20TDCI,D20TDCIFAP | M | +/- | | 09/04 ▸ | 1354178 | **734321** | 670 377,5 | ALB |
| 2.0 TDCi 16V | D | 1997 | D20TDCI,D20TDCIFAP | M | + | | 09/04 ▸ | 1357325 | **734321** | 670 377,5 | ALB |
| 2.0 TDCi 16V | D | 1997 | D20TDCI,D20TDCIFAP | M | | | 09/04 ▸ | 1374402 | **734321** | 670 377,5 | ALB |
| 2.0 TDCi 16V | D | 1997 | D20TDCI,D20TDCIFAP | M | | | 09/04 ▸ 12/07 | 1357325 | **734321** | 670 377,5 | ALB |

## FOCUS II (2007>)

| | | | | | | | | | | | |
|---|---|---|---|---|---|---|---|---|---|---|---|
| 1.6 Ti-VCT 115 GPL | F | 1596 | 1.6 DC Ti-VCT | M | + | | 12/09 ▸ | 1354177 | **734320** | 670 377,5 | ALB |
| 1.6 Ti-VCT 115 GPL | F | 1596 | 1.6 DC Ti-VCT | M | - | | 12/09 ▸ | 1354176 | **734319** | 450 376 | ALB |
| 1.8 16V | F | 1798 | Q7DA | M | +/- | | 12/07 ▸ | 1374177 | **734320** | 670 377,5 | ALB |
| 1.8 Flexifuel 16V | F | 1798 | Q7DA | M | + | | 12/07 ▸ | 1354177 | **734320** | 670 377,5 | ALB |
| 1.8 16V | F | 1798 | Q7DA | M | | | 12/07 ▸ | 1354177 | **734320** | 670 377,5 | ALB |
| 2.0 i CNG 145 16V,2.0 i LPG 145 16V | F | 1999 | 2.0DC-HE BIFUEL | M | | | 06/08 ▸ | 1354177 | **734320** | 670 377,5 | ALB |
| 2.0 i CNG 145 16V,2.0 i LPG 145 16V | F | 1999 | 2.0DC-HE BIFUEL | A | | | 06/08 ▸ | 1354177 | **734320** | 670 377,5 | ALB |
| 1.4 16V | E | 1388 | ZETEC-S 1.4 EFI | M | + | | 12/07 ▸ 04/10 | 1354177 | **734320** | 670 377,5 | ALB |
| 1.4 16V | E | 1388 | ZETEC-S 1.4 EFI | M | - | | 12/07 ▸ 04/10 | 1354176 | **734319** | 450 376 | ALB |
| 1.4 16V | E | 1388 | ZETEC-S 1.4 EFI | M | | | 12/07 ▸ 04/10 | 1354176 | **734319** | 450 376 | ALB |
| 1.6 16V,1.6 Ti-VCT | E | 1596 | HXDA,ZETEC-S 1.6 EFI | M | + | | 12/07 ▸ | 1354177 | **734320** | 670 377,5 | ALB |
| 1.6 16V,1.6 Ti-VCT | E | 1596 | HXDA,ZETEC-S 1.6 EFI | M | - | | 12/07 ▸ | 1354176 | **734319** | 450 376 | ALB |
| 1.6 16V | E | 1596 | ZETEC-S 1.6 EFI | A | + | | 12/07 ▸ | 1354177 | **734320** | 670 377,5 | ALB |
| 1.6 16V | E | 1596 | ZETEC-S 1.6 EFI | A | - | | 12/07 ▸ | 1354176 | **734319** | 450 376 | ALB |
| 1.8 16V | E | 1798 | 1.8 DURATEC-HE | M | | | 12/07 ▸ | 1354177 | **734320** | 670 377,5 | ALB |
| 2.0 16V | E | 1999 | 2.0L DURATEC-HE | M | +/- | | 12/07 ▸ | 1374177 | **734320** | 670 377,5 | ALB |
| 2.0 16V | E | 1999 | 2.0L DURATEC-HE | M | | | 12/07 ▸ | 1354177 | **734320** | 670 377,5 | ALB |
| 2.0 16V | E | 1999 | 2.0L DURATEC-HE | A | +/- | | 12/07 ▸ | 1374177 | **734320** | 670 377,5 | ALB |
| 2.0 16V | E | 1999 | 2.0L DURATEC-HE | A | | | 12/07 ▸ | 1354177 | **734320** | 670 377,5 | ALB |
| 2.5 T 20V | E | 2521 | 2.5 DURATEC | M | +/- | | 12/07 ▸ | 1357325 | **734321** | 670 377,5 | ALB |
| 1.6 TDCi,1.6 TDCi 110,1.6 TDCi 90 | D | 1560 | 1.6 DQ TDCI,G8DA,G8DB | M | +/- | | 12/07 ▸ | 1374402 | **734321** | 670 377,5 | ALB |
| 1.6 TDCi,1.6 TDCi 90 | D | 1560 | 1.6 DQ TDCI | M | | | 12/07 ▸ | 1357325 | **734321** | 670 377,5 | ALB |
| 1.8 TDCi | D | 1753 | 1.8 TC LYNX | M | +/- | | 12/07 ▸ 04/10 | 1374402 | **734321** | 670 377,5 | ALB |
| 2.0 TDCi | D | 1997 | 2.0 DURATORQ,2.0 DURATORQ/F | M | +/- | | 12/07 ▸ | 1357325 | **734321** | 670 377,5 | ALB |

## FOCUS C-MAX (03>07)

| | | | | | | | | | | | |
|---|---|---|---|---|---|---|---|---|---|---|---|
| 1.8 i CNG 16V,1.8 i Flexifuel 16V | F | 1798 | DURA18CNG,Q7DA | M | +/- | | 06/06 ▸ 02/07 | 1354177 | **734320** | 670 377,5 | ALB |
| 1.6 Ti-VCT 16V,1.6 i 16V DM | E | 1596 | HWDA/B,HXDA | M | +/- | | 06/03 ▸ 02/07 | 1354177 | **734320** | 670 377,5 | ALB |
| 1.6 Ti-VCT 16V,1.6 i 16V DM | E | 1596 | HWDA/B,HXDA | M | + | | 10/03 ▸ | 1305492 | **734320** | 670 377,5 | ALB |
| 1.6 i 16V DM | E | 1596 | HWDA/B | M | - | | 10/03 ▸ 02/07 | 1305491 | **734319** | 450 376 | ALB |
| 1.8 i 16V DMIC ; DMJC | E | 1798 | CSDA,DURA18 | M | +/- | | 10/03 ▸ 02/07 | 1354177 | **734320** | 670 377,5 | ALB |
| 1.8 i 16V DMIC ; DMJC | E | 1798 | CSDA | M | + | | 10/03 ▸ 03/04 | 1305492 | **734320** | 670 377,5 | ALB |
| 2.0 i 16V DM | E | 1999 | 2.0L DURATEC-HE | M | +/- | | 06/03 ▸ 02/07 | 1354177 | **734320** | 670 377,5 | ALB |
| 2.0 i 16V DM | E | 1999 | 2.0L DURATEC-HE | M | + | | 10/03 ▸ | 1305492 | **734320** | 670 377,5 | ALB |
| 2.0 i 16V | E | 1999 | 2.0L DURATEC-HE | A | +/- | | 11/05 ▸ 02/07 | 1354177 | **734320** | 670 377,5 | ALB |
| 1.6 TDCi 16V DMBF ; DMIF ; DMJF DM | D | 1560 | D16FAP,HHDA/B | M | +/- | | 06/03 ▸ | 1357325 | **734321** | 670 377,5 | ALB |
| 1.6 TDCi 16V DMIF ; DMJF ; DMB/F | D | 1560 | HHDA/B | M | + | | 06/03 ▸ | 1323756 | **734321** | 670 377,5 | ALB |
| 1.6 TDCi 16V DMIF ; DMJF ; DMB/F | D | 1560 | HHDA/B | M | + | | 10/03 ▸ 12/03 | 1230987 | **734321** | 670 377,5 | ALB |
| 1.6 TDCi 16V DMBF ; DMIF ; DMJF DM | D | 1560 | D16FAP,HHDA/B | M | | | 06/03 ▸ 02/07 | 1357325 | **734321** | 670 377,5 | ALB |
| 1.6 TDCi 16V DMIG ; DMJG | D | 1560 | D16FAP,HHDA/B | A | +/- | | 06/03 ▸ | 1357325 | **734321** | 670 377,5 | ALB |
| 1.6 TDCi 16V DMIG ; DMJG | D | 1560 | HHDA/B | A | + | | 06/03 ▸ | 1323756 | **734321** | 670 377,5 | ALB |
| 1.6 TDCi 16V DMIG ; DMJG | D | 1560 | HHDA/B | A | + | | 10/03 ▸ 12/03 | 1230987 | **734321** | 670 377,5 | ALB |

Radiator Ψυγείο Vodní chladič vízhűtő Радиатор Radiador Radiator Radyatör Radiator Radiatore di raffreddamento Motorkühler Radiateur Radiator



• **New** Nouveau **Nuevo** Novo **Nuovo** Nieuw **Neu** Nowość **Yeni** Новый Νέο **Novy**

# FORD (.../...)

## FOCUS C-MAX (03>07) (.../...)

| | | | | | | | | | | | | |
|---|---|---|---|---|---|---|---|---|---|---|---|---|
| 1.6 TDCi 16V | DMIG ; DMJG | D | 1560 | D16FAP,HHDA/B | A | | | 06/03 ▸ 02/07 | 1374402 | **734321** | 670 377,5 | ALB |
| 1.8 TDCi | | D | 1753 | KKDA | M | | | 01/05 ▸ 02/07 | 1374402 | **734321** | 670 377,5 | ALB |
| 2.0 TDCi 16V | DMII ; DMJI ; DM | D | 1997 | D20TDCI | M | +/- | | 06/03 ▸ | 1357325 | **734321** | 670 377,5 | ALB |
| 2.0 TDCi 16V | DMII ; DMJI ; DM | D | 1997 | D20TDCI | M | + | | 06/03 ▸ | 1323756 | **734321** | 670 377,5 | ALB |
| 2.0 TDCi 16V | DMII ; DMJI ; DM | D | 1997 | D20TDCI | M | + | | 10/03 ▸ 12/03 | 1230987 | **734321** | 670 377,5 | ALB |
| 2.0 TDCi 16V | DMII ; DMJI ; DM | D | 1997 | D20TDCI,D20TDCIFAP | M | | | 06/03 ▸ 02/07 | 1374402 | **734321** | 670 377,5 | ALB |

## FOCUS C-MAX (2007>)

| | | | | | | | | | | | | |
|---|---|---|---|---|---|---|---|---|---|---|---|---|
| 1.8 i 16V | | F | 1798 | 1.8 DURATEC-HE | M | +/- | | 03/07 ▸ 08/10 | 1354177 | **734320** | 670 377,5 | ALB |
| 2.0 i CNG 16V,2.0 i GPL 16V | | F | 1999 | 2.0DC-HE BIFUEL | M | | | 03/07 ▸ 08/10 | 1354177 | **734320** | 670 377,5 | ALB |
| 2.0 i CNG 16V,2.0 i GPL 16V | | F | 1999 | 2.0DC-HE BIFUEL | A | | | 03/07 ▸ 08/10 | 1354177 | **734320** | 670 377,5 | ALB |
| 1.6 i 16V | | E | 1596 | 1.6 ZETEC-S | M | + | | 03/07 ▸ 08/10 | 1374177 | **734320** | 670 377,5 | ALB |
| 1.6 i 16V | | E | 1596 | 1.6 ZETEC-S | M | - | | 03/07 ▸ 08/10 | 1354176 | **734319** | 450 376 | ALB |
| 1.8 i 16V | | E | 1798 | 1.8 DURATEC-HE | M | +/- | | 03/07 ▸ 08/10 | 1354177 | **734320** | 670 377,5 | ALB |
| 2.0 i 16V | | E | 1999 | 2.0L DURATEC-HE | M | +/- | | 03/07 ▸ 08/10 | 1374177 | **734320** | 670 377,5 | ALB |
| 2.0 i 16V | | E | 1999 | 2.0L DURATEC-HE | M | | | 03/07 ▸ 08/10 | 1354177 | **734320** | 670 377,5 | ALB |
| 2.0 i 16V | | E | 1999 | 2.0L DURATEC-HE | A | +/- | | 03/07 ▸ 08/10 | 1374177 | **734320** | 670 377,5 | ALB |
| 2.0 i 16V | | E | 1999 | 2.0L DURATEC-HE | A | | | 03/07 ▸ 08/10 | 1354177 | **734320** | 670 377,5 | ALB |
| 1.6 TDCi 16V | | D | 1560 | 1.6 DQ TDCI,G8DB | M | | | 03/07 ▸ | 1374402 | **734321** | 670 377,5 | ALB |
| 1.6 TDCi 16V | | D | 1560 | 1.6 DQ TDCI,G8DB | M | | | 03/07 ▸ 08/10 | 1357325 | **734321** | 670 377,5 | ALB |
| 1.8 TDCi | | D | 1753 | 1.8 TC LYNX | M | | | 03/07 ▸ | 1374402 | **734321** | 670 377,5 | ALB |
| 1.8 TDCi | | D | 1753 | 1.8 TC LYNX | M | | | 03/07 ▸ 08/10 | 1357325 | **734321** | 670 377,5 | ALB |
| 2.0 TDCi 16V | | D | 1997 | 2.0 DURATORQ,2.0 DURATORQ/F | M | | | 02/07 ▸ 08/10 | 1357325 | **734321** | 670 377,5 | ALB |
| 2.0 TDCi 16V | | D | 1997 | 2.0 DURATORQ,2.0 DURATORQ/F | M | | | 02/07 ▸ | 1374402 | **734321** | 670 377,5 | ALB |

## FOCUS COUPÉ CABRIOLET (06>08)

| | | | | | | | | | | | | |
|---|---|---|---|---|---|---|---|---|---|---|---|---|
| 1.6 i 16V | | E | 1596 | HWDA/B | M | - | | 07/06 ▸ 04/08 | 1354176 | **734319** | 450 376 | ALB |
| 2.0 i 16V | | E | 1999 | 2.0L DURATEC-HE | M | +/- | | 07/06 ▸ 04/08 | 1354177 | **734320** | 670 377,5 | ALB |
| 2.0 i 16V | | E | 1999 | 2.0L DURATEC-HE | A | +/- | | 07/06 ▸ 04/08 | 1354177 | **734320** | 670 377,5 | ALB |
| 1.6 i 16V | | E | 1596 | HWDA/B | M | + | | 07/06 ▸ 04/08 | 1354177 | **734320** | 670 377,5 | ALB |
| 2.0 TCDCi 16V | | D | 1997 | D20TDCIFAP | M | +/- | | 07/06 ▸ 04/08 | 1357325 | **734321** | 670 377,5 | ALB |
| 2.0 TCDCi 16V | | D | 1997 | D20TDCIFAP | M | +/- | | 07/06 ▸ | 1374402 | **734321** | 670 377,5 | ALB |

## FUSION (2002>2005)

| | | | | | | | | | | | | |
|---|---|---|---|---|---|---|---|---|---|---|---|---|
| 1.25 i 16V | | E | 1242 | 1.25 ZETEC-S/DU | M | +/- | | 08/04 ▸ 09/05 | 1325831 | **734273** | 500 356 | ALB |
| 1.4 i 16V | | E | 1388 | ZETEC-S 1.4 EFI | M | +/- | | 06/02 ▸ 01/04 | 1222562 | **734273** | 500 356 | ALB |
| 1.4 i 16V | | E | 1388 | ZETEC-S 1.4 EFI | M | +/- | | 01/04 ▸ 09/05 | 1325831 | **734273** | 500 356 | ALB |
| 1.4 i 16V | | E | 1388 | ZETEC-S 1.4 EFI | M | | | 06/02 ▸ | 1141490 | **734273** | 500 356 | ALB |
| 1.6 i 16V | | E | 1596 | ZETEC-S 1.6 EFI | M | +/- | | 06/02 ▸ 01/04 | 1222562 | **734273** | 500 356 | ALB |
| 1.6 i 16V | | E | 1596 | ZETEC-S 1.6 EFI | M | +/- | | 01/04 ▸ 09/05 | 1325831 | **734273** | 500 356 | ALB |
| 1.6 i 16V | | E | 1596 | ZETEC-S 1.6 EFI | M | | | 06/02 ▸ | 1141490 | **734273** | 500 356 | ALB |
| 1.6 i 16V | | E | 1596 | ZETEC-S 1.6 EFI | A | +/- | | 03/04 ▸ 09/05 | 1325831 | **734273** | 500 356 | ALB |
| 1.4 TDCi | | D | 1399 | F6JA | M | +/- | | 06/02 ▸ 09/05 | 1325830 | **734274** | 508 377,5 | ALB |

## FUSION (2005>)

| | | | | | | | | | | | | |
|---|---|---|---|---|---|---|---|---|---|---|---|---|
| 1.2 i 16V | | E | 1242 | 1.25 ZETEC-S/DU | M | +/- | | 10/05 ▸ | 1325831 | **734273** | 500 356 | ALB |
| 1.4 i 16V | | E | 1388 | ZETEC-S 1.4 EFI | M | +/- | | 10/05 ▸ 07/10 | 1325831 | **734273** | 500 356 | ALB |
| 1.6 i 16V | | E | 1596 | ZETEC-S 1.6 EFI | M | | | 10/05 ▸ 07/10 | 1325831 | **734273** | 500 356 | ALB |
| 1.6 i 16V | | E | 1596 | ZETEC-S 1.6 EFI | A | +/- | | 10/05 ▸ 07/10 | 1325831 | **734273** | 500 356 | ALB |
| 1.4 TDCi | | D | 1399 | F6JC | M | +/- | | 10/05 ▸ 05/06 | 1325830 | **734274** | 508 377,5 | ALB |
| 1.6 TDCi 16V | | D | 1560 | HHJA/B | M | +/- | | 10/05 ▸ | 1334250 | | 593 379 | ALB |

## GALAXY (95>2000)

| | | | | | | | | | | | | |
|---|---|---|---|---|---|---|---|---|---|---|---|---|
| 2.0 i | WGRNSE | E | 1998 | NSE | M | +/- | TSW 820829 | 05/95 ▸ 03/00 | 7258109 | **731385** | 646 377 | ALM |
| 2.0 i | WGRNSE | E | 1998 | NSE | A | +/- | TSW 820829 | 05/95 ▸ 03/00 | 7258109 | **731385** | 646 377 | ALM |
| 2.3 i 16V | WGRY5 | E | 2295 | Y5 | M | +/- | TSW 820035 | 01/97 ▸ 03/00 | 1022614 | **731387** | 645 470 | ALM |
| 2.3 i 16V | WGRY5 | E | 2295 | Y5 | A | +/- | TSW 820035 | 01/97 ▸ 03/00 | 1022614 | **731387** | 645 470 | ALM |
| 2.8 i VR6 | WGRAAA | E | 2792 | PW | M | +/- | TSW 820035 | 05/95 ▸ 03/00 | 7258108 | **731387** | 645 470 | ALM |
| 2.8 i VR6 | WGRAAA | E | 2792 | PW | A | +/- | TSW 820035 | 05/95 ▸ 03/00 | 7258108 | **731387** | 645 470 | ALM |
| 1.9 TDi | WGR/1Z1/AFN | D | 1896 | 1.9N,1.9P | M | +/- | TSW 820035 | 11/95 ▸ 03/00 | 7258107 | **731386** | 646 377 | ALM |
| 1.9 TDi | WGR | D | 1896 | 1.9TI | M | | TSW 820035 | 03/99 ▸ 03/00 | 7258107 | **731386** | 646 377 | ALM |

## GALAXY (2000>2006)

| | | | | | | | | | | | | |
|---|---|---|---|---|---|---|---|---|---|---|---|---|
| 2.0 i | | E | 1998 | NSE | M | + | TSW | 01/01 ▸ 10/01 | 1109257 | **732790** | 635 377 | ALB |
| 2.3 i 16V | | E | 2295 | Y5 | M | + | TSW | 04/00 ▸ 08/01 | 1109232 | **732791** | 635 470 | ALB |
| 2.3 i | | E | 2295 | Y5B | M | | TSW | 09/01 ▸ 04/06 | 1109232 | **732791** | 635 470 | ALB |
| 2.3 i 16V | | E | 2295 | Y5 | A | + | TSW | 04/00 ▸ 08/01 | 1109232 | **732791** | 635 470 | ALB |
| 2.3 i | | E | 2295 | Y5B | A | | TSW | 09/01 ▸ 04/06 | 1109232 | **732791** | 635 470 | ALB |
| 2.8 i V6 | | E | 2792 | PW-204 | M | + | TSW 820035 | 04/00 ▸ 04/06 | 1108999 | **732786** | 635 469,5 | ALB |
| 2.8 i V6 | | E | 2792 | PW-204 | A | + | TSW 820035 | 04/00 ▸ 04/06 | 1108999 | **732786** | 635 469,5 | ALB |

# FORD (.../...)

## GALAXY (2000>2006) (.../...)

| Type Ctr. | | CC | | AC | | | OE | Valeo | DIM. | TECH |
|---|---|---|---|---|---|---|---|---|---|---|
| 1.9 TDi | D | 1896 | 1.9TC,1.9TI | M | + | TSW | 04/00 ▸ 04/06 | 1109113 | **732790** | 635 377 | ALB |
| 1.9 TDi | D | 1896 | 1.9TC,1.9TI | M | | TSW 820035 | 10/01 ▸ 04/06 | 1209590 | **•735372** | 646,6 377,5 | ALM |
| 1.9 TDi | D | 1896 | 1.9TI | M | | TSW | 02/03 ▸ 04/06 | 1109113 | **732790** | 635 377 | ALB |
| 1.9 TDi | D | 1896 | 1.9TC | A | + | TSW | 04/00 ▸ 04/06 | 1109113 | **732790** | 635 377 | ALB |
| 1.9 TDi | D | 1896 | 1.9TC | A | | TSW 820035 | 10/01 ▸ 04/06 | 1209590 | **•735372** | 646,6 377,5 | ALM |

## GALAXY CA1 (2006>)

| | | | | | | | | | | | |
|---|---|---|---|---|---|---|---|---|---|---|---|
| 2.0 i 16V | E | 1999 | 2.0L DURATEC-HE | M | + | | 04/06 ▸ | 1377542 | **•735373** | 672 470 | ALB |
| 2.0 i 16V | E | 1999 | 2.0L DURATEC-HE | M | +/- | | 04/06 ▸ 03/10 | 1493773 | **•735373** | 672 470 | ALB |
| 2.3 i 16V | E | 2261 | 2.3 DURATEC HE | A | | | 03/07 ▸ 04/10 | 1493774 | **•735374** | 672 470 | ALB |
| 2.5 i 20V | E | 2521 | 2.5 DURATEC | M | + | | 04/06 ▸ 05/07 | 1377541 | **•735600** | 670 472 | ALB |
| 2.5 i 20V | E | 2521 | 2.5 DURATEC | M | +/- | | 05/07 ▸ 04/10 | 1493771 | **•735376** | 672 470 | ALB |
| 1.8 TDCi | D | 1753 | 1.8 TC LYNX,1.8 TCD LYNX | M | + | | 04/06 ▸ | 1377542 | **•735373** | 672 470 | ALB |
| 1.8 TDCi | D | 1753 | 1.8 TC LYNX,1.8 TCD LYNX | M | +/- | | 04/06 ▸ 04/10 | 1493773 | **•735373** | 672 470 | ALB |
| 2.0 TDCi 16V | D | 1997 | 2.0 DURATORQ,2.0TDCIDURATORQ | M | + | | 04/06 ▸ | 1377542 | **•735373** | 672 470 | ALB |
| 2.0 TDCi 16V | D | 1997 | 2.0 DURATORQ,2.0TDCIDURATORQ | M | +/- | | 04/06 ▸ 03/10 | 1493773 | **•735373** | 672 470 | ALB |
| 2.0 TDCi 16V | D | 1997 | 2.0TDCIDURATORQ | A | | | 04/06 ▸ 03/08 | 1493774 | **•735374** | 672 470 | ALB |
| 2.2 TDCi 16V | D | 2179 | 2.2 DQ TDCI | M | +/- | | 07/08 ▸ 04/10 | 1493771 | **•735376** | 672 470 | ALB |

## GALAXY (2010>)

| | | | | | | | | | | | |
|---|---|---|---|---|---|---|---|---|---|---|---|
| 1.6 SCTi 160 16V | E | 1596 | 1.6 DC ECOBOOST | M | +/- | | 09/10 ▸ | 1493771 | **•735376** | 672 470 | ALB |
| 2.0 SCTi 203 16V | E | 1999 | 2.0DC ECOBOOST | M | +/- | | 03/10 ▸ | 1493774 | **•735374** | 672 470 | ALB |
| 2.0 i 145 16V | E | 1999 | 2.0L DURATEC-HE | M | + | | 03/10 ▸ | 1493773 | **•735373** | 672 470 | ALB |
| 1.6 TDCi 115 | D | 1560 | 1.6 DQ CR TC | M | + | | 02/11 ▸ | 1493773 | **•735373** | 672 470 | ALB |
| 2.0 TDCi 115 16V,2.0 TDCi 136 16V<br>2.0 TDCi 140 16V,2.0 TDCi 163 16V | D | 1997 | 2.0DQ 16V CR TC<br>2.0DQ CR TC 136<br>2.0DQ DOHC 163,2.0DQ DOHC DSL | M | +/- | | 03/10 ▸ | 1493771 | **•735376** | 672 470 | ALB |
| 2.2 TDCi 200 16V | D | 2179 | 2.2 DQ TDCI | M | +/- | | 09/10 ▸ | 1493771 | **•735376** | 672 470 | ALB |

## GRANADA (77>82)

| | | | | | | | | | | | |
|---|---|---|---|---|---|---|---|---|---|---|---|
| 2000 | E | 1993 | NE/NS | M | - | | 09/77 ▸ 07/81 | 1587929 | **730110** | 350 442 | CBS |

## GRANADA (85>91)

| | | | | | | | | | | | |
|---|---|---|---|---|---|---|---|---|---|---|---|
| 1.8 GAE | E | 1796 | REC | M | + | | 05/85 ▸ 08/88 | 6148834 | | 605 384 | CBS |
| 1.8 GAE | E | 1796 | REC | M | - | | 05/85 ▸ 08/88 | 6148831 | | 605 328 | CBS |
| 2.0 i GAE | E | 1993 | NRA, NEL | M | +/- | | 05/85 ▸ 12/88 | 6148835 | | 605 362 | CBS |
| 2.0,2.0 i GAE | E | 1993 | NRA, NEL | A | +/- | | 02/86 ▸ 01/89 | 6148835 | | 605 362 | CBS |
| 2.0 GAE | E | 1998 | N8B | M | +/- | | 01/89 ▸ 02/90 | 6148834 | | 605 384 | CBS |
| 2.0 i GAE ; GFK | E | 1998 | N9B,N9D | M | - | TSW | 01/89 ▸ 12/91 | 1006154 | **730563** | 600 370 | CBS |
| 2.0 GAE | E | 1998 | N8B | A | + | | 01/89 ▸ 02/90 | 6148834 | | 605 384 | CBS |
| 2.0 i GAE ; GFK | E | 1998 | N9B,N9D | A | + | | 01/89 ▸ 12/91 | 7139161 | | 601 388 | CBS |
| 2.0 GAE | E | 1998 | N8B,N9B,N9D | A | - | | 01/89 ▸ 02/90 | 6148831 | | 605 328 | CBS |
| 2.0 i GAE ; GFK | E | 1998 | N9B,N9D | A | - | TSW | 01/89 ▸ 12/91 | 1006154 | **730563** | 600 370 | CBS |
| 2.4 i GAE | E | 2394 | ARC | M | +/- | TSW | 01/87 ▸ 08/89 | 7139160 | **730563** | 600 370 | CBS |
| 2.4 i GAE | E | 2394 | ARC | M | + | | 01/87 ▸ 08/89 | 1006156 | | 601 388 | CBS |
| 2.4 i GAE | E | 2394 | ARC | M | - | TSW | 01/87 ▸ 08/89 | 1006154 | **730563** | 600 370 | CBS |
| 2.4 i GAE | E | 2394 | ARC | A | +/- | | 01/87 ▸ 08/89 | 7139161 | | 601 388 | CBS |
| 2.4 i GAE | E | 2394 | ARC | A | + | | 01/87 ▸ 08/89 | 1006156 | | 601 388 | CBS |
| 2.4 i GAE | E | 2394 | ARC | A | - | TSW | 01/87 ▸ 08/89 | 1006154 | **730563** | 600 370 | CBS |
| 2.8 i GAE4 | E | 2792 | PRE | M | +/- | TSW | 11/85 ▸ 01/87 | 7139160 | **730563** | 600 370 | CBS |
| 2.8 i GAE4 | E | 2792 | PRE | M | | | 11/85 ▸ 01/87 | 6148832 | | 605 384 | CBS |
| 2.8 i GAE4 | E | 2792 | PRE | M | | | 11/85 ▸ 01/87 | 6148833 | | 605 384 | CBS |
| 2.8 i GAE | E | 2792 | PRE | A | +/- | | 08/85 ▸ 01/87 | 7139161 | | 601 388 | CBS |
| 2.8 i GAE | E | 2792 | PRE | A | | | 08/85 ▸ 01/87 | 6148832 | | 605 384 | CBS |
| 2.8 i GAE | E | 2792 | PRE | A | | | 08/85 ▸ 01/87 | 6148833 | | 605 384 | CBS |
| 2.9 i GAE//4 ; GFK//4 | E | 2933 | BRC,BRE | M | +/- | TSW | 01/87 ▸ 12/91 | 7139160 | **730563** | 600 370 | CBS |
| 2.9 i GAE//4 ; GFK//4 | E | 2933 | BRC,BRE | M | | | 01/87 ▸ 12/91 | 1006156 | | 601 388 | CBS |
| 2.9 i GAE//4 ; GFK//4 | E | 2933 | BRC,BRE | M | | TSW | 01/87 ▸ 12/91 | 1006154 | **730563** | 600 370 | CBS |
| 2.9 i GAE | E | 2933 | BRC,BRD | A | +/- | | 02/91 ▸ 12/91 | 7139161 | | 601 388 | CBS |
| 2.9 i GFK | E | 2933 | BRD | A | +/- | TSW | 02/91 ▸ 12/91 | 7139160 | **730563** | 600 370 | CBS |
| 2.9 i GAE ; GFK | E | 2933 | BRC,BRD | A | | TSW | 02/91 ▸ 12/91 | 1006154 | **730563** | 600 370 | CBS |
| 2.9 i GAE ; GFK | E | 2933 | BRC,BRD | A | | | 02/91 ▸ 12/91 | 1006156 | | 601 388 | CBS |

## GRANADA (92>95)

| | | | | | | | | | | | |
|---|---|---|---|---|---|---|---|---|---|---|---|
| 2.0 i GAE | E | 1998 | N9B,N9D | M | + | | 01/92 ▸ 01/95 | 1006156 | | 601 388 | CBS |
| 2.0 i GAE | E | 1998 | N9B,N9D | M | - | TSW | 01/92 ▸ 01/95 | 1006154 | **730563** | 600 370 | CBS |
| 2.0 i GAE | E | 1998 | N9B,N9D | A | + | | 01/92 ▸ 01/95 | 1006156 | | 601 388 | CBS |
| 2.0 i GAE | E | 1998 | N9B,N9D | A | - | TSW | 01/92 ▸ 01/95 | 1006154 | **730563** | 600 370 | CBS |
| 2.9 i GAE | E | 2933 | BRE | M | + | | 01/92 ▸ 01/95 | 1006156 | | 601 388 | CBS |
| 2.9 i E | E | 2933 | BRE | M | - | TSW | 01/92 ▸ 01/95 | 1006154 | **730563** | 600 370 | CBS |

Radiator Radiateur Motorkühler Radiatore di raffreddamento Radiator Radyatör Radiator Radiador Радиатор vízhűtő Vodní chladič Radiator Ψυγείο



• **New** Nouveau **Nuevo** Novo **Nuovo** Nieuw **Neu** Nowość **Yeni** Новый Νέο **Novy**

# FORD (.../...)

## GRANADA (92>95) (.../...)

| Type Ctr. | | CC | | AC | | | | OE | Valeo | DIM. | TECH |
|---|---|---|---|---|---|---|---|---|---|---|---|
| 2.9 i | E | 2933 | BRD | A | + | | 01/92 ▸ 01/95 | 1006156 | | 601 388 | CBS |
| 2.9 i | E | 2933 | BRD | A | - | TSW | 01/92 ▸ 01/95 | 1006154 | **730563** | 600 370 | CBS |

## KA (96>2008)

| | | | | | | | | | | | | |
|---|---|---|---|---|---|---|---|---|---|---|---|---|
| 1.3 i | RBT | E | 1299 | J4D,J4K,J4M,JJB,JJD,JJF | M | + | | 09/96 ▸ | 1025533 | **734772** | 380 362 | ALB |
| 1.3 i | RBT | E | 1299 | J4D,J4K,J4M,JJB,JJD,JJF | M | - | | 09/96 ▸ | 1056616 | **731992** | 380 359 | ALM |
| 1.3 i | RB1 | E | 1299 | BAJA,DURATEC 1.3 EFI | M | - | | 10/02 ▸ 11/08 | 1361842 | •**735478** | 380 355 | ALB |
| 1.6 i | RB1S | E | 1599 | CDA/B/C | M | - | | 02/03 ▸ 09/03 | 1222478 | | 380 355 | ALB |
| 1.6 i | RB1S | E | 1599 | CDA/B/C | M | - | | 09/03 ▸ 11/08 | 1361842 | •**735478** | 380 355 | ALB |

## KUGA

| | | | | | | | | | | | | |
|---|---|---|---|---|---|---|---|---|---|---|---|---|
| 2.0 TDCi 136 | | D | 1997 | 2.0 DURATORQ/F | M | + | | 04/08 ▸ 03/10 | 1493773 | •**735373** | 672 470 | ALB |

## MAVERICK (93>98)

| | | | | | | | | | | | | |
|---|---|---|---|---|---|---|---|---|---|---|---|---|
| 2.4 i | TBFNKU ; KBF/NKQ/NKU | E | 2389 | BF | M | +/- | | 05/96 ▸ 03/98 | 1958983 | | 502 564 | |
| 2.7 TD | TVPUKQ ; KVP/NKQ/NKV NYQ/NYV | D | 2663 | TD27 | M | +/- | | 02/93 ▸ 04/96 | 1953239 | **732592** | 453 646 | ALB |
| 2.7 TDi | KBF/NKQ/NUQ/NVQ TBF/UKQ/UUQ/UVQ | D | 2663 | TD27E | M | +/- | | 05/96 ▸ 03/98 | 1958982 | **731785** | 500 655 | ALB |
| 2.7 TDi | KBF/NKQ/NUQ/NVQ TBF/UKQ/UUQ/UVQ | D | 2663 | TD27E | M | | | 05/96 ▸ 03/98 | 1958983 | | 502 564 | |

## MAVERICK (2000>)

| | | | | | | | | | | | | |
|---|---|---|---|---|---|---|---|---|---|---|---|---|
| 2.0 i 16V | | E | 1988 | EDDC, EDD-122 | M | + | | 12/00 ▸ 12/03 | 4135748 | | 700 467 | ALB |
| 2.0 i,2.0 i 16V | | E | 1988 | EDD-122,EDDC | M | + | | 12/00 ▸ 12/03 | 4098941 | | 700 467 | ALB |
| 2.0 i,2.0 i 16V | | E | 1988 | EDD-122,EDDC | A | +/- | | 04/01 ▸ 12/03 | 4119589 | | 700 507 | ALB |
| 2.3 i | | E | 2261 | L3-150 | A | +/- | | 09/02 ▸ 12/03 | 4119589 | | 700 507 | ALB |
| 3.0 i V6 24V | | E | 2967 | AJ-197 | A | +/- | | 02/01 ▸ 12/03 | 4119589 | | 700 507 | ALB |
| 3.0 i V6 24V | | E | 2967 | AJ-197,AJ-203 | A | + | | 12/00 ▸ | 4135737 | **734468** | 700 507 | ALB |
| 3.0 i V6 24V | | E | 2967 | AJ-197,AJ-203 | A | + | | 12/00 ▸ 05/06 | 4106727 | **734468** | 700 507 | ALB |

## MONDEO (93>2000)

| | | | | | | | | | | | | |
|---|---|---|---|---|---|---|---|---|---|---|---|---|
| 1.6 i | BFP ; BNP ; BAP | E | 1597 | L1,L1F,L1J-88,L1J-90 | M | +/- | | 01/93 ▸ 08/00 | 1086946 | **731550** | 610 377,5 | ALM |
| 1.6 i | BFP ; BNP ; BAP | E | 1597 | L1,L1F,L1J-90 | M | + | | 01/93 ▸ | 1029616 | **731011** | 619 386 | ALB |
| 1.6 i | BFP | E | 1597 | L1F | M | + | | 01/93 ▸ 08/96 | 1086946 | **731550** | 610 377,5 | ALM |
| 1.6 i | BFP ; BNP ; BAP | E | 1597 | L1,L1F,L1J-90 | M | - | | 01/93 ▸ 11/98 | 1029617 | **731550** | 610 377,5 | ALM |
| 1.6 i | BFP ; BNP ; BAP | E | 1597 | L1J-88 | M | | | 06/94 ▸ 08/96 | 1029616 | **731011** | 619 386 | ALB |
| 1.8 i | BFP ; BAP//4 ; BNP//4 | E | 1796 | RKA,RKB,RKJ | M | +/- | | 01/93 ▸ 08/00 | 1086946 | **731550** | 610 377,5 | ALM |
| 1.8 i | BFP ; BAP//4 ; BNP//4 | E | 1796 | RKA,RKJ | M | + | | 01/93 ▸ | 1029616 | **731011** | 619 386 | ALB |
| 1.8 i | BFP ; BNP ; BAP | E | 1796 | RKA | M | + | | 01/93 ▸ 08/96 | 1086946 | **731550** | 610 377,5 | ALM |
| 1.8 i | BFP ; BAP//4 ; BNP//4 | E | 1796 | RKA,RKJ | M | - | | 01/93 ▸ 11/98 | 1029617 | **731550** | 610 377,5 | ALM |
| 1.8 i | BFP ; BNP ; BAP | E | 1796 | RKB | M | | | 01/93 ▸ 08/96 | 1029616 | **731011** | 619 386 | ALB |
| 1.8 i | BFP ; BNP ; BAP | E | 1796 | RKA,RKB,RKJ | A | +/- | | 01/93 ▸ 08/00 | 1038608 | | 610 358,5 | CBS |
| 1.8 i | BFP ; BNP ; BAP | E | 1796 | RKA,RKJ | A | +/- | | 06/93 ▸ | 1011984 | | 610 358,5 | CBS |
| 1.8 i | BNP | E | 1796 | RKJ | A | + | | 08/96 ▸ 11/98 | 1029617 | **731550** | 610 377,5 | ALM |
| 2.0 i | BFP ; BNP ; BAP | E | 1988 | NGA | M | +/- | | 08/96 ▸ 08/00 | 1086946 | **731550** | 610 377,5 | ALM |
| 2.0 i | BFP ; BNP ; BAP | E | 1988 | NGA | M | + | | 08/96 ▸ | 1029616 | **731011** | 619 386 | ALB |
| 2.0 i | BFP ; BNP ; BAP | E | 1988 | NGA | M | - | | 08/96 ▸ 11/98 | 1029617 | **731550** | 610 377,5 | ALM |
| 2.0 i | BFP ; BNP ; BAP | E | 1988 | NGA | A | +/- | | 08/96 ▸ | 1011984 | | 610 358,5 | CBS |
| 2.0 i | BFP ; BNP ; BAP | E | 1988 | NGA | A | +/- | | 08/96 ▸ 08/00 | 1038608 | | 610 358,5 | CBS |
| 2.0 i | BNP | E | 1988 | NGA | A | + | | 08/96 ▸ 11/98 | 1029617 | **731550** | 610 377,5 | ALM |
| 2.0 i | BFP ; BAP//4 ; BNP//4 | E | 1997 | NGA | M | +/- | | 01/93 ▸ 08/96 | 1086946 | **731550** | 610 377,5 | ALM |
| 2.0 i | BAP/ ; BNP ; BFP//4 | E | 1997 | NGA | M | + | | 01/93 ▸ 08/96 | 1086946 | **731550** | 610 377,5 | ALM |
| 2.0 i | BAP//4 ; BNP ; BFP//4 | E | 1997 | NGA | M | + | | 01/93 ▸ 08/96 | 1029616 | **731011** | 619 386 | ALB |
| 2.0 i | BAP//4 ; BFP//4 ; BNP//4 | E | 1997 | NGA | M | - | | 01/93 ▸ 08/96 | 1029617 | **731550** | 610 377,5 | ALM |
| 2.0 i | BNP4 | E | 1997 | NGA | M | | | 02/95 ▸ 08/96 | 1029616 | **731011** | 619 386 | ALB |
| 2.0 i | BFP ; BNP ; BAP | E | 1997 | NGA | A | +/- | | 06/93 ▸ 08/96 | 1038608 | | 610 358,5 | CBS |
| 2.0 i | BAP ; BFP | E | 1997 | NGA | A | +/- | | 05/95 ▸ 08/96 | 1011984 | | 610 358,5 | CBS |
| 2.0 i | BNP4 | E | 1998 | NGA-132 | M | +/- | | 12/94 ▸ 08/96 | 1086946 | **731550** | 610 377,5 | ALM |
| 2.0 i | BNP4 | E | 1998 | NGA-132 | M | | | 12/94 ▸ 08/96 | 1029616 | **731011** | 619 386 | ALB |
| 2.5 i V6,2.5 i V6 24V | BFP ; BNP ; BAP | E | 2495 | SE,SEC | M | +/- | TSW | 04/99 ▸ 09/00 | 1036597 | **734303** | 620 395 | ALB |
| 2.5 i V6,2.5 i V6 24V | BFP ; BNP ; BAP | E | 2495 | SE,SEC | M | | TSW | 04/99 ▸ 09/00 | 1024051 | **731257** | 618 382 | CBS |
| 2.5 i V6 24V | BFP ; BNP ; BAP | E | 2495 | SEC | A | | | 05/00 ▸ 09/00 | 1058734 | | 620 397 | ALB |
| 2.5 i V6 24V | BFP ; BNP ; BAP | E | 2544 | SEA | M | +/- | TSW | 07/94 ▸ 08/00 | 1024051 | **731257** | 618 382 | CBS |
| 2.5 i V6 24V | BFP ; BNP ; BAP | E | 2544 | SEA | M | +/- | TSW | 05/97 ▸ 08/00 | 1036597 | **734303** | 620 395 | ALB |
| 2.5 i V6 24V | BFP ; BNP ; BAP | E | 2544 | SEA | A | +/- | | 11/97 ▸ 08/00 | 1058734 | | 620 397 | ALB |
| 1.8 TD | BFP ; BNP ; GBP BAP | D | 1753 | RFM,RFN | M | +/- | TSW | 06/93 ▸ 08/00 | 1024051 | **731257** | 618 382 | CBS |

# FORD (.../...)

## MONDEO (93>2000) (.../...)

| Type Ctr. | | CC | | AC | | | OE | Valeo | DIM. | TECH |
|---|---|---|---|---|---|---|---|---|---|---|
| 1.8 TD BFP ; BNP ; BAP | D | 1753 | RFN | M | +/- | TSW | 09/97 ▸ 08/00 | 1036597 | **734303** | 620 395 | ALB |

## MONDEO (2000>2003)

| | | | | | | | | | | | |
|---|---|---|---|---|---|---|---|---|---|---|---|
| 1.8 i 16V WF0/AXX/FXX/NXX | E | 1798 | CGBA,CGBB,CHBA,CHBB | M | + | | 10/00 ▸ 05/03 | 1142808 | **734286** | 620 406 | ALB |
| 1.8 i 16V WF0/AXX/FXX/NXX | E | 1798 | CGBA,CGBB,CHBA,CHBB | M | + | | 10/00 ▸ 04/01 | 1124902 | **734286** | 620 406 | ALB |
| 2.0 i 16V WF0/AXX/FXX/NXX | E | 1999 | CJBA,CJBB | M | + | | 10/00 ▸ 05/03 | 1142808 | **734286** | 620 406 | ALB |
| 2.0 i 16V WF0/AXX/FXX/NXX | E | 1999 | CJBA,CJBB | M | + | | 10/00 ▸ 04/01 | 1124902 | **734286** | 620 406 | ALB |
| 2.0 i 16V WF0/AXX/FXX/NXX | E | 1999 | CJBA,CJBB | A | + | | 10/00 ▸ 04/01 | 1124902 | **734286** | 620 406 | ALB |
| 2.0 i 16V WF0/AXX/FXX/NXX | E | 1999 | CJBA,CJBB | A | + | | 10/00 ▸ 05/03 | 1142808 | **734286** | 620 406 | ALB |
| 2.5 i V6 24V WF0/AXX/FXX/NXX | E | 2495 | LCBD | M | + | | 10/00 ▸ 05/03 | 1142810 | **734287** | 620 397 | ALB |
| 2.5 i V6 24V WF0FXX | E | 2495 | LCBD | M | + | | 10/00 ▸ 04/01 | 1115771 | **734287** | 620 397 | ALB |
| 2.5 i V6 24V WF0/AXX/FXX/NXX | E | 2495 | LCBD | M | + | | 03/02 ▸ 05/03 | 1216262 | **734696** | 610 397 | ALB |
| 2.5 i V6 24V WF0/AXX/FXX/NXX | E | 2495 | LCBD | M | + | | 05/03 ▸ 05/03 | 1320515 | **734696** | 610 397 | ALB |
| 2.5 i V6 24V WF0FXX | E | 2495 | LCBD | A | + | | 10/00 ▸ 04/01 | 1115771 | **734287** | 620 397 | ALB |
| 2.5 i V6 24V WF0/AXX/FXX/NXX | E | 2495 | LCBD | A | + | | 10/00 ▸ 05/03 | 1142810 | **734287** | 620 397 | ALB |
| 2.5 i V6 24V WF0/AXX/FXX/NXX | E | 2495 | LCBD | A | + | | 03/02 ▸ 05/03 | 1216262 | **734696** | 610 397 | ALB |
| 2.5 i V6 24V WF0/AXX/FXX/NXX | E | 2495 | LCBD | A | + | | 05/03 ▸ 05/03 | 1320515 | **734696** | 610 397 | ALB |
| 3.0 i V6 24V WF0FXX ; WF0/AXX/FXX | E | 2967 | MEBA | M | + | | 03/02 ▸ 05/03 | 1216262 | **734696** | 610 397 | ALB |
| 2.0 DI 16V,2.0 TDCi 16V 2.0 TDDI 16V WF0/AXX/FXX/NXX | D | 1998 | 2.0 DURATORQ DI,D5BA,FMBA | M | +/- | | 10/00 ▸ 05/03 | 1315633 | **734699** | 620 395 | ALB |
| 2.0 DI 16V,2.0 TDCi 16V 2.0 TDDI 16V WF0/AXX/FXX/NXX | D | 1998 | 2.0 DURATORQ DI,D5BA,FMBA | M | +/- | | 05/02 ▸ 05/03 | 1216264 | **734699** | 620 395 | ALB |
| 2.0 DI 16V,2.0 TDCi 16V 2.0 TDDI 16V WF0/AXX/FXX/NXX | D | 1998 | 2.0 DURATORQ DI,D5BA,FMBA | M | + | | 10/00 ▸ 04/01 | 1115769 | **734288** | 620 397 | ALB |
| 2.0 DI 16V,2.0 TDCi 16V 2.0 TDDI 16V WF0/AXX/FXX/NXX | D | 1998 | 2.0 DURATORQ DI,D5BA,FMBA | M | + | | 04/01 ▸ 05/02 | 1142812 | **734288** | 620 397 | ALB |
| 2.0 TDCi 16V WF0/AXX/FXX/NXX | D | 1998 | FMBA | A | +/- | | 10/01 ▸ 05/03 | 1315633 | **734699** | 620 395 | ALB |
| 2.0 TDCi 16V WF0/AXX/FXX/NXX | D | 1998 | FMBA | A | +/- | | 05/02 ▸ 05/03 | 1216264 | **734699** | 620 395 | ALB |
| 2.0 TDCi 16V WF0/AXX/FXX/NXX | D | 1998 | FMBA | A | + | | 10/01 ▸ 05/02 | 1142812 | **734288** | 620 397 | ALB |
| 2.0 TDCi 16V WF0FXX | D | 1998 | FMBA | A | + | | 10/01 ▸ 04/01 | 1115769 | **734288** | 620 397 | ALB |

## MONDEO (2003>2005)

| | | | | | | | | | | | |
|---|---|---|---|---|---|---|---|---|---|---|---|
| 1.8 SCi 16V | E | 1798 | ZH18 | M | + | | 06/03 ▸ 04/05 | 1142808 | **734286** | 620 406 | ALB |
| 1.8 i 16V | E | 1798 | CGBB,CHBB | M | | | 06/03 ▸ 04/05 | 1142808 | **734286** | 620 406 | ALB |
| 2.0 i 16V | E | 1999 | CJBB | M | | | 06/03 ▸ 04/05 | 1142808 | **734286** | 620 406 | ALB |
| 2.0 i 16V | E | 1999 | CJBB | A | | | 06/03 ▸ 04/05 | 1142808 | **734286** | 620 406 | ALB |
| 2.5 i V6 24V | E | 2495 | LCBD | M | | | 06/03 ▸ 04/05 | 1142810 | **734287** | 620 397 | ALB |
| 2.5 i V6 24V | E | 2495 | LCBD | M | | | 06/03 ▸ 04/05 | 1320515 | **734696** | 610 397 | ALB |
| 2.5 i V6 24V | E | 2495 | LCBD | A | | | 06/03 ▸ 04/05 | 1142810 | **734287** | 620 397 | ALB |
| 2.5 i V6 24V | E | 2495 | LCBD | A | | | 06/03 ▸ 04/05 | 1320515 | **734696** | 610 397 | ALB |
| 3.0 i V6 24V | E | 2967 | DURA30,MEBA | M | | | 10/04 ▸ 04/05 | 1320515 | **734696** | 610 397 | ALB |
| 2.0 TDDi 16V | D | 1998 | D5BA | M | | | 06/03 ▸ 04/05 | 1320515 | **734696** | 610 397 | ALB |
| 2.0 TDCi 16V,2.0 TDDi 16V | D | 1998 | D5BA,D6BA,FMBA | M | | | 06/03 ▸ 04/05 | 1350152 | **735048** | 620 417 | ALB |
| 2.0 TDCi 16V | D | 1998 | D6BA,FMBA | A | | | 06/03 ▸ 04/05 | 1350152 | **735048** | 620 417 | ALB |
| 2.2 TDCi 16V | D | 2198 | DURATQ22 | M | | | 10/04 ▸ 04/05 | 1350152 | **735048** | 620 417 | ALB |

## MONDEO (2005>2007)

| | | | | | | | | | | | |
|---|---|---|---|---|---|---|---|---|---|---|---|
| 1.8 i 16V | E | 1798 | DURA18 | M | +/- | | 05/05 ▸ 06/07 | 1142808 | **734286** | 620 406 | ALB |
| 1.8 SCi 16V | E | 1798 | ZH18 | M | | | 05/05 ▸ 04/07 | 1142808 | **734286** | 620 406 | ALB |
| 2.0 i 16V | E | 1999 | 2.0L DURATEC-HE | M | +/- | | 05/05 ▸ 06/07 | 1142808 | **734286** | 620 406 | ALB |
| 2.0 i 16V | E | 1999 | 2.0L DURATEC-HE | A | +/- | | 05/05 ▸ 06/07 | 1142808 | **734286** | 620 406 | ALB |
| 3.0 i V6 24V | E | 2967 | DURA30,MEBA | M | + | | 05/05 ▸ 06/07 | 1320515 | **734696** | 610 397 | ALB |
| 2.0 TDCi 16V | D | 1998 | 2.0DI DURATORQ,DURATQ20 | M | +/- | | 05/05 ▸ 06/07 | 1350152 | **735048** | 620 417 | ALB |
| 2.2 TDCi 16V | D | 2198 | DURATQ22 | M | +/- | | 05/05 ▸ 06/07 | 1350152 | **735048** | 620 417 | ALB |

## MONDEO III (2007>)

| | | | | | | | | | | | |
|---|---|---|---|---|---|---|---|---|---|---|---|
| 2.0 203 16V | E | 1999 | 2.0DC ECOBOOST | M | +/- | | 03/10 ▸ 09/10 | 1493771 | •**735376** | 672 470 | ALB |
| 2.3 16V | E | 2261 | 2.3 DURATEC HE | A | | | 09/07 ▸ 03/10 | 1493774 | •**735374** | 672 470 | ALB |
| 2.5 20V | E | 2521 | 2.5 DURATEC | M | + | | 06/07 ▸ 06/07 | 1377541 | •**735600** | 670 472 | ALB |
| 2.5 20V | E | 2521 | 2.5 DURATEC | M | +/- | | 06/07 ▸ 03/10 | 1493771 | •**735376** | 672 470 | ALB |
| 2.0 TDCi,2.0 TDCi 115,2.0 TDCi 136 2.0 TDCi 140,2.0 TDCi 163 | D | 1997 | 2.0DQ 16V CR TC 2.0DQ CR TC 136 2.0DQ DOHC 163,2.0DQ DOHC DSL 2.0DQ DOHC ECO | M | +/- | | 03/10 ▸ 09/10 | 1493771 | •**735376** | 672 470 | ALB |
| 2.0 TDCi | D | 1997 | 2.0TDCIDURATORQ | A | +/- | | 06/07 ▸ 03/10 | 1493774 | •**735374** | 672 470 | ALB |
| 2.0 TDCi | D | 1997 | 2.0TDCIDURATORQ | A | | | 06/07 ▸ 06/07 | 1433321 | •**735600** | 670 472 | ALB |
| 2.2 TDCi | D | 2179 | 2.2 DQ TDCI | M | +/- | | 07/08 ▸ 03/10 | 1493771 | •**735376** | 672 470 | ALB |

## MONDEO III (2010>)

| | | | | | | | | | | | |
|---|---|---|---|---|---|---|---|---|---|---|---|
| 2.0 SCTi 203 16V,2.0 SCTi 240 16V | E | 1999 | 2.0DC ECOBOOST | A | | | 09/10 ▸ | 1493774 | •**735374** | 672 470 | ALB |

Radiator Radiateur Motorkühler Radiatore di raffreddamento Radiator Radyatör Радиатор Radiador Vodní chladič Radiator Ψυγείο vízhűtő



• **New** Nouveau **Nuevo** Novo **Nuovo** Nieuw **Neu** Nowość **Yeni** Новый Νέο **Novy**

| Type Ctr. | | CC | | AC | | | OE | Valeo | DIM. | TECH |
|---|---|---|---|---|---|---|---|---|---|---|
| **MONDEO III (2010>) (.../...)** | | | | | | | | | | |
| 2.0 TDCi 115 16V,2.0 TDCi 140 16V<br>2.0 TDCi 163 16V | D | 1997 | 2.0DQ 16V CR TC<br>2.0DQ DOHC 163,2.0DQ DOHC DSL | M | +/- | | 09/10 ▸ | 1493771 | •735376 | 672 470 | ALB |
| 2.0 TDCi 140 16V,2.0 TDCi 163 16V | D | 1997 | 2.0DQ 16V CR TC<br>2.0DQ DOHC 163 | A | +/- | | 09/10 ▸ | 1493771 | •735376 | 672 470 | ALB |
| 2.0 TDCi 200 16V,2.2 TDCi 200 16V | D | 2179 | 2.2 DQ TDCI | M | +/- | | 09/10 ▸ | 1493771 | •735376 | 672 470 | ALB |
| **ORION (83>90)** | | | | | | | | | | |
| 1300 | E | 1296 | JP,JPA | M | - | | 09/83 ▸ 08/90 | 1647745 | | 600 285 | ALM |
| 1300 | E | 1296 | JP | M | - | | 08/88 ▸ 08/90 | 6168493 | | 602 272 | CBS |
| 1300 | E | 1296 | JPA | M | | TSW | 09/83 ▸ 02/86 | 6138596 | 811047 | 600 290 | CBS |
| 1300 | E | 1296 | JP | M | | | 02/86 ▸ 07/88 | 1643544 | | 600 285 | ALM |
| 1300 | E | 1296 | JP | M | | | 08/88 ▸ 08/90 | 1652498 | | 602 272 | CBS |
| 1400,1400 i | E | 1392 | F6B,FUA | M | +/- | TSW | 02/86 ▸ 08/90 | 1643537 | 730117 | 602 322 | ALM |
| 1400,1400 i | E | 1392 | F6B,FUA | M | - | TSW | 02/86 ▸ 10/87 | 6148704 | •731594 | 601 322 | ALM |
| 1400,1400 i | E | 1392 | F6B,FUA | M | | TSW | 11/87 ▸ 08/90 | 6184413 | 730117 | 602 322 | ALM |
| 1600 i | E | 1597 | LRA | M | +/- | | 09/83 ▸ 02/86 | 1638622 | | 490 305 | CBS |
| 1600,1600 i | E | 1597 | LR,LUA | M | +/- | TSW | 02/86 ▸ 08/90 | 1643537 | 730117 | 602 322 | ALM |
| 1600 i | E | 1597 | LRA | M | | TSW | 09/83 ▸ 02/86 | 6138600 | 811047 | 600 290 | CBS |
| 1600,1600 i | E | 1597 | LR,LUA | M | - | TSW | 02/86 ▸ 11/87 | 6148704 | •731594 | 601 322 | ALM |
| 1600,1600 i | E | 1597 | LR,LUA | M | | TSW | 11/87 ▸ 08/90 | 6184413 | 730117 | 602 322 | ALM |
| 1600 | E | 1597 | LUA | A | +/- | | 02/86 ▸ 08/90 | 1643538 | | 602 272 | CBS |
| 1600 | E | 1597 | LUA | A | | | 02/86 ▸ 10/87 | 6148706 | | 602 272 | CBS |
| 1600 | E | 1597 | LUA | A | | | 11/87 ▸ 08/90 | 6184415 | | 602 272 | CBS |
| 1600 | E | 1598 | LPA | M | +/- | TSW | 09/83 ▸ 02/86 | 1643537 | 730117 | 602 322 | ALM |
| 1600 | E | 1598 | LPA | A | +/- | | 09/83 ▸ 02/86 | 1643538 | | 602 272 | CBS |
| 1600 | E | 1598 | LPA | A | | | 09/83 ▸ 02/86 | 6138597 | | 600 289 | CBS |
| 1600 D | D | 1608 | LT | M | +/- | TSW | 09/83 ▸ 07/88 | 1643537 | 730117 | 602 322 | ALM |
| 1600 D | D | 1608 | LT | M | | TSW | 09/83 ▸ 02/86 | 6138600 | 811047 | 600 290 | CBS |
| 1600 D | D | 1608 | LT | M | - | TSW | 02/86 ▸ 07/88 | 6184414 | •731594 | 601 322 | ALM |
| 1800 D | D | 1753 | RT | M | +/- | TSW | 08/88 ▸ 07/89 | 1643537 | 730117 | 602 322 | ALM |
| 1800 D | D | 1753 | RT | M | +/- | PIP+<br>TSW | 07/89 ▸ 08/90 | 6525326 | 731595 | 601 322 | ALM |
| 1800 D | D | 1753 | RT | M | - | TSW | 08/88 ▸ 07/89 | 6184414 | •731594 | 601 322 | ALM |
| 1800 D | D | 1753 | RT | M | | PIP+<br>TSW | 08/88 ▸ 08/90 | 6525327 | 731595 | 601 322 | ALM |
| **ORION (90>93)** | | | | | | | | | | |
| 1.3 AFL | E | 1297 | JB | M | | | 09/90 ▸ 09/93 | 1664630 | | 500 287 | CBS |
| 1.3 i AFL | E | 1299 | J6A | M | | | 09/90 ▸ 09/93 | 1106768 | | 500 287 | CBS |
| 1.4,1.4 i AFL | E | 1392 | F6F,F6G,FUH | M | + | +PIP<br>TSW | 09/90 ▸ 09/93 | 6616487 | 730856 | 600 377,5 | ALM |
| 1.4,1.4 i AFL | E | 1392 | F6F,F6G,FUH | M | - | TSW | 09/90 ▸ 09/93 | 6912232 | 730857 | 500 322 | ALM |
| 1.4,1.4 i AFL | E | 1392 | F6F,F6G,FUH | M | | TSW | 09/90 ▸ 09/93 | 6562898 | 730857 | 500 322 | ALM |
| 1.6,1.6 i AFL | E | 1597 | L1E,LJE,LJF,LUJ,LUK | M | + | +PIP<br>TSW | 09/90 ▸ 09/93 | 6912237 | 730856 | 600 377,5 | ALM |
| 1.6,1.6 i AFL | E | 1597 | LJE,LJF,LUJ,LUK | M | + | +PIP<br>TSW | 09/90 ▸ 09/93 | 6616487 | 730856 | 600 377,5 | ALM |
| 1.6,1.6 i AFL | E | 1597 | LJE,LJF,LUJ,LUK | M | - | TSW | 09/90 ▸ 09/93 | 6912232 | 730857 | 500 322 | ALM |
| 1.6 i AFL | E | 1597 | L1E | M | - | +PIP<br>TSW | 01/92 ▸ 09/93 | 6912233 | 730856 | 600 377,5 | ALM |
| 1.6 i AFL | E | 1597 | LJE,LJF | M | | TSW | 09/90 ▸ 09/93 | 6562898 | 730857 | 500 322 | ALM |
| 1.6 i AFL | E | 1597 | L1E | M | | +PIP<br>TSW | 01/92 ▸ 09/93 | 6616483 | 730856 | 600 377,5 | ALM |
| 1.8 i AFL | E | 1796 | RDA,RQB | M | +/- | +PIP<br>TSW | 01/92 ▸ 09/93 | 6912233 | 730856 | 600 377,5 | ALM |
| 1.8 i AFL | E | 1796 | RDA,RQB | M | +/- | +PIP<br>TSW | 01/92 ▸ 09/93 | 6912234 | 730856 | 600 377,5 | ALM |
| 1.8 i AFL | E | 1796 | RDA,RQB | M | | +PIP<br>TSW | 01/92 ▸ 09/93 | 6616483 | 730856 | 600 377,5 | ALM |
| 1.8 TD AFL | D | 1753 | RFE | M | + | TSW | 09/92 ▸ 09/93 | 6792788 | 731300 | 525 365 | CBS |
| 1.8 D,1.8 TD AFL | D | 1753 | RFE,RT | M | - | TSW | 09/90 ▸ 09/93 | 1029459 | 731300 | 525 365 | CBS |
| **PUMA** | | | | | | | | | | |
| 1.4 i 16V ECV | E | 1388 | FHD,FHF | M | +/- | TSW | 01/98 ▸ | 1001859 | 731736 | 525 377,5 | ALM |
| 1.4 i 16V ECV | E | 1388 | FHD,FHF | M | | TSW | 01/98 ▸ 10/00 | 1098807 | 731736 | 525 377,5 | ALM |
| 1.6 i 16V ECV | E | 1596 | ZH16S | M | | TSW | 09/00 ▸ 12/01 | 1098807 | 731736 | 525 377,5 | ALM |
| 1.7 i 16V ECV | E | 1679 | MHA | M | +/- | TSW | 05/97 ▸ | 1001859 | 731736 | 525 377,5 | ALM |
| 1.7 i 16V ECV | E | 1679 | MHA | M | | TSW | 05/97 ▸ 12/01 | 1098807 | 731736 | 525 377,5 | ALM |
| **SCORPIO (85>92)** | | | | | | | | | | |
| 1800 GAE | E | 1796 | REC | M | - | | 03/85 ▸ 04/87 | 6148831 | | 605 328 | CBS |

# FORD (.../...)

| Type Ctr. | | CC | | | AC | | 2+3 | OE | Valeo | DIM. | TECH |
|---|---|---|---|---|---|---|---|---|---|---|---|
| **SCORPIO (85>92) (.../...)** | | | | | | | | | | | |
| 2000,2000 i | E | 1993 | NEL,NRA,NRC | M | + | | 03/85 ▸ 10/89 | 6148834 | | 605 384 | CBS |
| 2000,2000 i | E | 1993 | NEL,NRA,NRC | M | - | | 03/85 ▸ 10/89 | 6148831 | | 605 328 | CBS |
| 2000 i | E | 1993 | NRA | A | +/- | | 03/85 ▸ 10/89 | 6148835 | | 605 362 | CBS |
| 2000 GAE | E | 1993 | NEL | A | + | | 03/85 ▸ 10/89 | 6148834 | | 605 384 | CBS |
| 2000 GAE | E | 1993 | NEL | A | - | | 03/85 ▸ 10/89 | 6148831 | | 605 328 | CBS |
| 2000,2000 i GAE ; GFK | E | 1998 | N8B,N9B | M | +/- | TSW | 11/89 ▸ 01/92 | 6184416 | **730563** | 600 370 | CBS |
| 2000,2000 i | E | 1998 | N8B,N9B | A | +/- | | 11/89 ▸ 01/92 | 6184417 | | 601 388 | CBS |
| 2400 i | E | 2394 | ARC,ARD | M | +/- | TSW | 11/87 ▸ 01/92 | 6184416 | **730563** | 600 370 | CBS |
| 2400 i | E | 2394 | ARC,ARD | A | + | | 11/86 ▸ 01/92 | 6184417 | | 601 388 | CBS |
| 2400 i | E | 2394 | ARC | A | | | 11/86 ▸ 10/87 | 6148833 | | 605 384 | CBS |
| 2800 i | E | 2792 | PRE | M | +/- | | 03/85 ▸ 10/86 | 6148832 | | 605 384 | CBS |
| 2800 i | E | 2792 | PRE | A | +/- | | 03/85 ▸ 10/86 | 6148833 | | 605 384 | CBS |
| 2900 i | E | 2933 | BRC,BRD | M | + | TSW | 11/86 ▸ 01/92 | 6184416 | **730563** | 600 370 | CBS |
| 2900 i | E | 2933 | BRC,BRD | A | + | | 11/87 ▸ 01/92 | 6184417 | | 601 388 | CBS |
| 2900 i | E | 2933 | BRC | A | | | 11/86 ▸ 10/87 | 6148833 | | 605 384 | CBS |
| 2500 D | D | 2499 | STR | M | +/- | | 11/85 ▸ 09/88 | 6185711 | | 605 362 | CBS |
| **SCORPIO (92>94)** | | | | | | | | | | | |
| 2.0,2.0 i GFK ; GNM ; GAE | E | 1998 | N8B,N9B,N9F | M | +/- | TSW | 02/92 ▸ 10/94 | 6184416 | **730563** | 600 370 | CBS |
| 2.0 i | E | 1998 | N9D | M | +/- | | 02/92 ▸ 09/94 | 7310662 | | 630 370 | ALB |
| 2.0 i | E | 1998 | N9D | M | + | | 02/92 ▸ 09/94 | 1006156 | | 601 388 | CBS |
| 2.0 i | E | 1998 | N9D | M | - | TSW | 02/92 ▸ 09/94 | 1006154 | **730563** | 600 370 | CBS |
| 2.0,2.0 i GAE ; GFK | E | 1998 | N8B,N9F | M | | TSW | 02/92 ▸ 10/94 | 1006154 | **730563** | 600 370 | CBS |
| 2.0,2.0 i GAE ; GFK | E | 1998 | N8B,N9F | M | | | 02/92 ▸ 10/94 | 1006156 | | 601 388 | CBS |
| 2.0,2.0 i GAE ; GFK | E | 1998 | N8B,N9B,N9F | A | +/- | | 02/92 ▸ 10/94 | 6184417 | | 601 388 | CBS |
| 2.0 i | E | 1998 | N9D | A | +/- | | 02/92 ▸ 09/94 | 7310663 | | 600 330 | ALB |
| 2.0,2.0 i | E | 1998 | N8B,N9D | A | + | | 02/92 ▸ 10/94 | 1006156 | | 601 388 | CBS |
| 2.0,2.0 i | E | 1998 | N8B,N9D | A | - | TSW | 02/92 ▸ 10/94 | 1006154 | **730563** | 600 370 | CBS |
| 2.0,2.0 i GAE ; GFK | E | 1998 | N8B,N9B | A | | | 02/92 ▸ 10/94 | 1006156 | | 601 388 | CBS |
| 2.0,2.0 i GAE ; GFK | E | 1998 | N8B,N9B | A | | TSW | 02/92 ▸ 10/94 | 1006154 | **730563** | 600 370 | CBS |
| 2.4 i GFK ; GNM ; GAE | E | 2394 | ARD,ARC | M | +/- | TSW | 02/92 ▸ 10/94 | 6184416 | **730563** | 600 370 | CBS |
| 2.4 i | E | 2394 | ARC | M | +/- | TSW | 02/92 ▸ 09/94 | 1006154 | **730563** | 600 370 | CBS |
| 2.4 i GAE ; GFK | E | 2394 | ARD | A | +/- | | 02/92 ▸ 10/94 | 6184417 | | 601 388 | CBS |
| 2.9 i | E | 2933 | BRE | M | +/- | TSW | 02/92 ▸ 09/94 | 1006154 | **730563** | 600 370 | CBS |
| 2.9 i GFE ; GFK ; GNM ; GAE | E | 2933 | BRE,BRF | M | +/- | TSW | 02/92 ▸ 10/94 | 6184416 | **730563** | 600 370 | CBS |
| 2.9 i | E | 2933 | BRD | A | +/- | | 02/92 ▸ 09/94 | 1006156 | | 601 388 | CBS |
| 2.9 i GFK ; GNM | E | 2933 | BRD,BRF | A | +/- | | 02/92 ▸ 10/94 | 6184417 | | 601 388 | CBS |
| 2.5 TD GFK ; GNM ; GAE GFR ; GNR | D | 2500 | SCB,SCC,SCD | M | +/- | | 09/93 ▸ 07/98 | 6801358 | | 465 422 | ALB |
| **SCORPIO (94>98)** | | | | | | | | | | | |
| 2.0 i 16V GFR ; GNR | E | 1997 | N3A | M | +/- | | 10/94 ▸ 07/98 | 7310662 | | 630 370 | ALB |
| 2.0 i 16V GFR ; GNR | E | 1997 | N3A | A | +/- | | 10/94 ▸ 07/98 | 7310663 | | 600 330 | ALB |
| 2.0 i GFR ; GNR | E | 1998 | NSD,NSE | M | +/- | | 10/94 ▸ 07/98 | 7310662 | | 630 370 | ALB |
| 2.3 i 16V GFR ; GNR | E | 2295 | Y5A | M | +/- | | 05/96 ▸ 07/98 | 7310662 | | 630 370 | ALB |
| 2.3 i 16V GFR ; GNR | E | 2295 | Y5A | A | +/- | | 05/96 ▸ 07/98 | 7310663 | | 600 330 | ALB |
| 2.9 i GFR ; GNR | E | 2933 | BRF | M | +/- | TSW 820216 | 10/94 ▸ 08/96 | 7404754 | **734428** | 600 405 | ALB |
| 2.9 i GFR ; GNR | E | 2933 | BRF | A | +/- | TSW 820216 | 10/94 ▸ 08/96 | 7404754 | **734428** | 600 405 | ALB |
| 2.9 i 24V GFR ; GNR | E | 2935 | BOB | A | +/- | | 10/94 ▸ 07/98 | 7310661 | | | |
| **SIERRA (82>86)** | | | | | | | | | | | |
| 1.3 | E | 1294 | JCT | M | + | | 08/84 ▸ 1985 | 6148513 | | 605 362 | CBS |
| 1.3 | E | 1294 | JCT | M | - | | 08/82 ▸ 07/84 | 1619034 | | 608 344 | CBS |
| 1.3 | E | 1294 | JCT | M | - | | 07/84 ▸ 1985 | 6162003 | | 607 247 | CBS |
| 1.3 | E | 1294 | JCT | M | | | 07/84 ▸ 1985 | 6148213 | | 607 247 | CBS |
| 1.6,1600 | E | 1593 | LCT | M | + | | 08/84 ▸ 1986 | 1647852 | | 605 362 | CBS |
| 1.6,1600 | E | 1593 | LCS,LCT | M | - | | 08/82 ▸ 07/84 | 1619034 | | 608 344 | CBS |
| 1.6,1600 | E | 1593 | LCT | M | - | | 07/84 ▸ 1986 | 6162003 | | 607 247 | CBS |
| 1.6,1600 | E | 1593 | LCT | M | | | 07/84 ▸ 1986 | 6148213 | | 607 247 | CBS |
| 1.6 | E | 1593 | LCT | A | - | | 08/82 ▸ 1984 | 1619034 | | 608 344 | CBS |
| 1600 | E | 1597 | LSD | M | + | | 10/84 ▸ 12/86 | 1647852 | | 605 362 | CBS |
| 1600 | E | 1597 | LSD | M | - | | 10/84 ▸ 09/86 | 6162003 | | 607 247 | CBS |
| 1600 | E | 1597 | LSD | M | | | 10/84 ▸ 09/86 | 6148213 | | 607 247 | CBS |
| 1.6 | E | 1597 | LSE | A | + | | 10/84 ▸ 1986 | 6148513 | | 605 362 | CBS |
| 1.6 | E | 1597 | LSE | A | - | | 10/84 ▸ 1986 | 6162003 | | 607 247 | CBS |
| 1.6 | E | 1597 | LSE | A | | | 10/84 ▸ 1986 | 6148213 | | 607 247 | CBS |
| 1.6,1600 | E | 1597 | LSD | M | + | | 08/84 ▸ 12/86 | 1647853 | | 605 362 | CBS |
| 1.6,1600 | E | 1597 | LSD | M | - | | 01/84 ▸ 07/84 | 6130452 | | 608 344 | CBS |
| 1.8,1800 | E | 1796 | REB,RED | M | + | | 10/84 ▸ 12/86 | 1647852 | | 605 362 | CBS |
| 1800 | E | 1796 | REB | A | + | | 10/84 ▸ 12/86 | 6148513 | | 605 362 | CBS |

Radiator Radiateur Motorkühler Radiatore di raffreddamento Radiator Radyatör Радиатор vízhűtő Radiador Vodní chladič Radiator Ψυγείο



• **New** Nouveau **Nuevo** Novo **Nuovo** Nieuw **Neu** Nowość **Yeni** Новый Νέο **Novy**

# FORD (.../...)

## SIERRA (82>86) (.../...)

| | | CC | | AC | | | | OE | Valeo | DIM. | TECH |
|---|---|---|---|---|---|---|---|---|---|---|---|
| 2.0,2000 | E | 1993 | NET | M | + | | 08/84 ▸ 12/86 | 1647852 | | 605 362 | CBS |
| 2.0 | E | 1993 | NET | M | - | | 08/82 ▸ 07/84 | 6130453 | | 608 344 | CBS |
| 2.0,2000 | E | 1993 | NET | M | - | | 08/82 ▸ 07/84 | 1619034 | | 608 344 | CBS |
| 2.0,2000 | E | 1993 | NET | M | - | | 07/84 ▸ 09/86 | 6162003 | | 607 247 | CBS |
| 2.0,2000 | E | 1993 | NET | M | | | 08/82 ▸ 07/84 | 1619035 | | 608 344 | CBS |
| 2.0,2000 | E | 1993 | NET | M | | TSW | 08/82 ▸ 07/84 | 6130454 | | 608 344 | CBS |
| 2.0,2000 | E | 1993 | NET | M | | | 07/84 ▸ 09/86 | 6148213 | | 607 247 | CBS |
| 2.0,2000 | E | 1993 | NET | M | | TSW | 08/84 ▸ 12/86 | 6148514 | | 601 368 | CBS |
| 2.0 | E | 1993 | NET | A | +/- | TSW | 08/82 ▸ 07/84 | 6130454 | | 608 344 | CBS |
| 2.0,2.0 i | E | 1993 | NET,NRB | A | +/- | | 08/84 ▸ 12/86 | 1647854 | | 601 368 | CBS |
| 2.0 i,2000 i | E | 1993 | NET,NRB | A | + | | 08/82 ▸ 12/86 | 6148513 | | 605 362 | CBS |
| 2.0 | E | 1993 | NET | A | - | | 08/82 ▸ 07/84 | 6130453 | | 608 344 | CBS |
| 2.0 | E | 1993 | NET | A | | | 07/84 ▸ 09/86 | 6148213 | | 607 247 | CBS |
| 2.0 | E | 1993 | NET | A | | TSW | 08/84 ▸ 12/86 | 6148514 | | 601 368 | CBS |
| 2.0 | E | 1993 | NET | M | + | | 08/84 ▸ 1986 | 1647853 | | 605 362 | CBS |
| 2.0 | E | 1993 | NET | M | - | | 08/82 ▸ 07/84 | 1619034 | | 608 344 | CBS |
| 2.0 i,2000 i | E | 1993 | NRB | M | - | | 08/82 ▸ 12/86 | 1647852 | | 605 362 | CBS |
| 2.0 | E | 1998 | NYT | M | - | | 08/82 ▸ 1986 | 6129658 | | 605 384 | CBS |
| 2.0 | E | 1998 | NYT | M | - | | 08/82 ▸ 07/84 | 1613496 | | 605 384 | CBS |
| 2.0 | E | 1998 | NYT | M | | | 08/82 ▸ 1986 | 1613494 | | 605 384 | CBS |
| 2300 | E | 2294 | YY | A | +/- | | 08/82 ▸ 09/84 | 1613495 | | 600 367 | CBS |
| 2300,2.3 | E | 2294 | YY | A | +/- | | 08/82 ▸ 09/84 | 6129658 | | 605 384 | CBS |
| 2.3,2300 | E | 2294 | YY | A | +/- | | 09/84 ▸ 1985 | 1647856 | | 600 367 | CBS |
| 2300 | E | 2294 | YY | A | | | 08/82 ▸ 09/84 | 1613494 | | 605 384 | CBS |
| 2300 | E | 2294 | YY | M | +/- | | 08/82 ▸ 09/84 | 1613496 | | 605 384 | CBS |
| 2.3 | E | 2294 | YY | M | - | | 08/82 ▸ 09/84 | 1613496 | | 605 384 | CBS |
| 2.3,2300 | E | 2294 | YY | M | | | 08/82 ▸ 09/84 | 1613494 | | 605 384 | CBS |
| 2.8,2.8 i | E | 2792 | PR6,PR7,PRG | M | +/- | | 01/83 ▸ 01/93 | 1647856 | | 600 367 | CBS |

## SIERRA (87>93)

| | | | | | | | | | | | |
|---|---|---|---|---|---|---|---|---|---|---|---|
| 1.6 i | E | 1597 | L6B | M | +/- | TSW | 05/89 ▸ 12/92 | 6186886 | **730590** | 605 362 | CBS |
| 1.6 | E | 1597 | LSE | M | + | | 01/87 ▸ 09/87 | 1647852 | | 605 362 | CBS |
| 1.6 i | E | 1597 | L6B | M | | TSW | 05/89 ▸ 12/92 | 1654011 | **730590** | 605 362 | CBS |
| 1.8,1.8 i | E | 1769 | R2A,R6A,RED | M | +/- | TSW | 07/88 ▸ 01/93 | 6186886 | **730590** | 605 362 | CBS |
| 1.8 | E | 1769 | R2A | M | - | TSW | 07/88 ▸ 01/93 | 1106758 | **730589** | 605 328 | CBS |
| 1.8 | E | 1769 | R2A,RED | M | | TSW | 07/88 ▸ 01/93 | 1644977 | **730589** | 605 328 | CBS |
| 1.8 | E | 1769 | R2A | M | | TSW | 07/88 ▸ 01/93 | 1654011 | **730590** | 605 362 | CBS |
| 1.8 | E | 1769 | R2A | A | +/- | | 07/88 ▸ 01/93 | 1644979 | | 600 358 | CBS |
| 1.8 | E | 1769 | R2A | A | | | 07/88 ▸ 01/93 | 1644980 | | 600 358 | CBS |
| 1.8 | E | 1796 | RED | M | + | | 01/87 ▸ 09/87 | 1647852 | | 605 362 | CBS |
| 1.8 | E | 1796 | RED | A | | | 01/87 ▸ 10/87 | 6148514 | | 601 368 | CBS |
| 2.0,2.0 i | E | 1993 | N4A,NES | M | + | | 01/87 ▸ 09/87 | 1647852 | | 605 362 | CBS |
| 2.0 | E | 1993 | NES | M | + | | 01/87 ▸ 1988 | 6148513 | | 605 362 | CBS |
| 2.0 i | E | 1993 | N4A | M | | | 01/87 ▸ 04/88 | 6148513 | | 605 362 | CBS |
| 2.0 | E | 1993 | NES | M | | | 07/88 ▸ 1990 | 6148213 | | 607 247 | CBS |
| 2.0 i | E | 1993 | N4A | A | +/- | | 01/87 ▸ 11/87 | 1647854 | | 601 368 | CBS |
| 2.0 i | E | 1993 | N4A | A | | | 01/87 ▸ 04/88 | 6148513 | | 605 362 | CBS |
| 2.0 | E | 1993 | NES | A | | | 01/87 ▸ 10/87 | 6148514 | | 601 368 | CBS |
| 2.0 | E | 1993 | NES | A | | | 07/88 ▸ 1990 | 6148213 | | 607 247 | CBS |
| 2.0,2.0 i | E | 1998 | N8A | M | +/- | | 07/88 ▸ 1993 | 6165438 | **730968** | 600 370 | CBS |
| 2.0 i | E | 1998 | N9A,N9C | M | | | 01/90 ▸ 01/93 | 1647740 | **730968** | 600 370 | CBS |
| 2.0 i | E | 1998 | N9A,N9C | A | +/- | | 07/88 ▸ 01/93 | 6165439 | | 605 362 | CBS |
| 2800 i | E | 2792 | PRG | M | + | | 01/87 ▸ 1987 | 1613496 | | 605 384 | CBS |
| 2.8 i | E | 2792 | PR6,PR7 | M | | | 01/87 ▸ 01/93 | 1613496 | | 605 384 | CBS |
| 2.9 i | E | 2935 | B4A,B4B | M | +/- | | 06/88 ▸ 1993 | 6165439 | | 605 362 | CBS |
| 2.9 i | E | 2935 | B4A,B4B | M | + | | 06/88 ▸ 01/93 | 1647740 | **730968** | 600 370 | CBS |
| 1.8 TD | D | 1753 | RFA,RFB | M | +/- | | 01/90 ▸ 01/93 | 6198624 | | 600 360 | CBS |
| 1.8 TD | D | 1753 | RFA,RFB | M | | | 01/90 ▸ 01/93 | 1659346 | | 600 360 | CBS |
| 2.3 D | D | 2304 | YTR | M | +/- | | 01/87 ▸ 02/89 | 6185712 | | 605 362 | CBS |
| 2.3 D | D | 2304 | YTR | M | +/- | | 03/89 ▸ 1990 | 6192467 | | 605 362 | CBS |

## S-MAX (2006>2010)

| | | | | | | | | | | | |
|---|---|---|---|---|---|---|---|---|---|---|---|
| 2.0 i 16V | F | 1999 | 2.0L DURATEC | M | +/- | | 03/08 ▸ 06/10 | 1493773 | **•735373** | 672 470 | ALB |
| 2.0 i 16V | E | 1999 | 2.0L DURATEC-HE | M | +/- | | 04/06 ▸ 06/10 | 1493773 | **•735373** | 672 470 | ALB |
| 2.3 i Turbo 16V | E | 2261 | 2.3 DURATEC HE | A | | | 03/07 ▸ 06/10 | 1493774 | **•735374** | 672 470 | ALB |
| 2.5 i Turbo 20V | E | 2521 | 2.5 DURATEC | M | + | | 04/06 ▸ 05/07 | 1377541 | **•735600** | 670 472 | ALB |
| 2.5 i Turbo 20V | E | 2521 | 2.5 DURATEC | M | +/- | | 05/07 ▸ 06/10 | 1493771 | **•735376** | 672 470 | ALB |
| 1.8 TDCi | D | 1753 | 1.8 TC LYNX,1.8 TCD LYNX | M | +/- | | 04/06 ▸ 06/10 | 1493773 | **•735373** | 672 470 | ALB |
| 2.0 TDCi 16V | D | 1997 | 2.0 DURATORQ | M | + | | 04/06 ▸ | 1377542 | **•735373** | 672 470 | ALB |
| 2.0 TDCi 16V | D | 1997 | 2.0 DURATORQ,2.0TDCIDURATORQ | M | +/- | | 04/06 ▸ 06/10 | 1493773 | **•735373** | 672 470 | ALB |

| Type Ctr. | | CC | | AC | | | OE | Valeo | DIM. | TECH |
|---|---|---|---|---|---|---|---|---|---|---|
| **FORD (.../...)** | | | | | | | | | | |
| **S-MAX (2006>2010) (.../...)** | | | | | | | | | | |
| 2.0 TDCi 16V | D | 1997 | 2.0TDCIDURATORQ | A | | | 03/07 ▸ 06/10 | 1493774 | •735374 | 672 470 | ALB |
| 2.0 TDCi 16V | D | 1998 | 2.0DI DURATORQ | M | + | | 04/06 ▸ | 1377542 | •735373 | 672 470 | ALB |
| 2.2 TDCi 16V | D | 2179 | 2.2 DQ TDCI | M | +/- | | 07/08 ▸ 06/10 | 1493771 | •735376 | 672 470 | ALB |
| **STREETKA** | | | | | | | | | | |
| 1.6 i RL | E | 1599 | CDA/B/C | M | + | | 11/02 ▸ | 1231795 | 734392 | 380 361 | ALB |
| 1.6 i RL | E | 1599 | CDA/B/C | M | - | | 03/03 ▸ 12/05 | 1222478 | | 380 355 | ALB |
| 1.6 i RL | E | 1599 | CDA/B/C | M | - | | 08/03 ▸ | 1221061 | •735478 | 380 355 | ALB |
| **TAUNUS** | | | | | | | | | | |
| 1300 | E | 1294 | JCC | M | - | | 02/76 ▸ 07/82 | 1587929 | 730110 | 350 442 | CBS |
| 1600 | E | 1592 | LCJ,LEE,LER | M | - | | 02/76 ▸ 07/82 | 1587929 | 730110 | 350 442 | CBS |
| 1600 | E | 1592 | LCJ,LEE | A | - | | 02/76 ▸ 07/82 | 1587932 | | 346 406 | CBS |
| 2000 | E | 1993 | NEO | M | - | | 02/76 ▸ 07/82 | 1587929 | 730110 | 350 442 | CBS |
| 2000 | E | 1993 | NEO | A | - | | 02/76 ▸ 07/82 | 1587932 | | 346 406 | CBS |
| 2000 | E | 1998 | NX | M | - | | 07/79 ▸ 07/82 | 1587929 | 730110 | 350 442 | CBS |
| 2000 | E | 1998 | NX | A | - | | 02/76 ▸ 07/82 | 1587932 | | 346 406 | CBS |
| 2300 | E | 2293 | VY | A | - | | 08/79 ▸ 07/82 | 6067409 | | 383 515 | CBS |
| 2300 | E | 2293 | VY | M | - | | 02/76 ▸ 07/79 | 6004443 | | 350 434 | CBS |
| **FORD** | | | | | | | | | | |
| **COURRIER (91>96)** | | | | | | | | | | |
| 1.3,1.3 i | E | 1299 | J6B,JBC | M | - | TSW | 08/91 ▸ 09/96 | 1107118 | 730483 | 500 322 | ALM |
| 1.3,1.3 i | E | 1299 | J6B,JBC | M | | TSW | 08/91 ▸ 09/96 | 1004039 | 730483 | 500 322 | ALM |
| 1.8 D | D | 1753 | RTC,RTD | M | - | TSW | 08/91 ▸ 09/96 | 7138824 | 730484 | 500 322 | ALM |
| **COURRIER (96>)** | | | | | | | | | | |
| 1.3 i J3SA ; J5SJ4C | E | 1299 | J4C | M | + | | 10/96 ▸ 09/02 | 1001856 | 731617 | 500 359 | ALM |
| 1.3 i J3SA ; J5SJ4C | E | 1299 | J4C | M | - | | 10/96 ▸ 09/02 | 1001855 | 731734 | 500 303 | ALM |
| 1.4 i J5S | E | 1392 | F4B | M | | +PIP TSW | 10/96 ▸ 10/99 | 6912233 | 730856 | 600 377,5 | ALM |
| 1.8 D J3SC ; J5SRTJ | D | 1753 | RTJ | M | +/- | TSW | 10/96 ▸ | 1042588 | 732003 | 525 377,5 | ALM |
| **P100 PICK-UP** | | | | | | | | | | |
| 1.8 TD PAA/BA/BB ; PAB/BA BB ; PAC/BA/BB ; PAD/BA/BB | D | 1753 | RFA | M | - | | 02/89 ▸ 05/93 | 1659344 | 731786 | 600 390 | ALB |
| **TOURNEO CONNECT (2002>2006)** | | | | | | | | | | |
| 1.8 i 16V | E | 1796 | EYPA | M | + | | 05/02 ▸ 06/06 | 4367092 | 735043 | 702 386 | |
| 1.8 i 16V | E | 1796 | EYPA | M | + | | 05/02 ▸ 06/06 | 1365996 | 735167 | 702 386 | ALB |
| 1.8 i 16V | E | 1796 | EYPA | M | - | | 05/02 ▸ 06/06 | 4367089 | 735043 | 702 386 | |
| 1.8 TDCi | D | 1753 | D18TCI | M | +/- | | 05/02 ▸ 06/06 | 4367092 | 735043 | 702 386 | |
| 1.8 TDCi,1.8 TDdi | D | 1753 | D18DI,D18TCI | M | +/- | | 05/02 ▸ 06/06 | 1365996 | 735167 | 702 386 | ALB |
| 1.8 TDdi | D | 1753 | D18DI | M | + | | 05/02 ▸ 06/06 | 4367092 | 735043 | 702 386 | |
| 1.8 TDdi | D | 1753 | D18DI | M | - | | 05/02 ▸ 06/06 | 4367089 | 735043 | 702 386 | |
| **TOURNEO CONNECT (2006>)** | | | | | | | | | | |
| 1.8 TDCi | D | 1753 | 1.8 TC LYNX | M | | | 06/06 ▸ | 1365996 | 735167 | 702 386 | ALB |
| **TRANSIT (78>85)** | | | | | | | | | | |
| 1.6 VAA/KS/VS ; VFAZ ; VCA/KS/VS | E | 1593 | LAT | M | - | | 01/78 ▸ 11/80 | 6074158 | | 345 430 | CBS |
| 2.0 VFL/KL/KS/VS/Z ; VJL/KS/VS/Z ; VML/KL/VL/Z VPL/KL/VL ; VUL/KL/VL | E | 1993 | NAV | M | - | | 01/78 ▸ 11/80 | 6080817 | | 346 420 | CBS |
| 2.0 VFL/KL/KS/VS/Z ; VJL/KS/VS/Z ; VML/KL/VL/Z VPL/KL/VL ; VUL/KL/VL | E | 1993 | NAV | M | - | | 12/80 ▸ 06/82 | 1606463 | | 346 420 | CBS |
| 2.0 VFL/KL/KS/VS/Z ; VJL/KS/VS/Z ; VML/KL/VL/Z VPL/KL/VL ; VUL/KL/VL | E | 1993 | NAV | M | - | | 07/82 ▸ 12/85 | 1608141 | | 346 420 | CBS |
| 2.4 D VCD/Z ; VGD/DS/FS/VS/Z ; VKD/DS/FS/VS/Z VLD/FL/V2 ; VND/DL/FL/VL ; VRD/FL/VL/Z VUD/DL/FL/VL | D | 2358 | 4AA | M | - | | 01/78 ▸ 12/79 | 1575611 | 819320 | 680 420 | CBS |
| 2.4 D VCD/Z ; VGD/DS/FS/VS/Z ; VKD/DS/FS/VS/Z VLD/FL/V2 ; VND/DL/FL/VL ; VRD/FL/VL/Z VUD/DL/FL/VL | D | 2358 | 4AA | M | - | | 01/80 ▸ 01/82 | 1590322 | 819320 | 680 420 | CBS |
| 2.4 D VCD/Z ; VGD/DS/FS/VS/Z ; VKD/DS/FS/VS/Z VLD/FL/V2 ; VND/DL/FL/VL ; VRD/FL/VL/Z VUD/DL/FL/VL | D | 2358 | 4AA | M | - | | 08/83 ▸ 12/85 | 6124011 | | 680 430 | CBS |
| **TRANSIT (86>91)** | | | | | | | | | | |
| 1.6 TBAA ; TBCA ; TAA/A | E | 1593 | LAT | M | + | | 10/85 ▸ 12/91 | 6160274 | 730124 | 601 322 | ALM |

Radiator Ψυγείο Vodní chladič Радиатор vízhűtő Radiador Radiator Radyatör Radiator Radiatore di raffreddamento Motorkühler Radiateur Radiator



• **New** Nouveau **Nuevo** Novo **Nuovo** Nieuw **Neu** Nowość **Yeni** Новый Νέο **Nový**

| Type Ctr. | | CC | | AC | | | OE | Valeo | DIM. | TECH |
|---|---|---|---|---|---|---|---|---|---|---|
| **FORD (.../...)** | | | | | | | | | | |
| **TRANSIT (86>91) (.../...)** | | | | | | | | | | |
| 1.6 TBAA ; TBCA ; TAA/A | E | 1593 | LAT | M | - | | 10/85 ▸ 12/91 | 6160271 | **819176** | 602 322 | ALM |
| 2.0,2.0 i TBCB ; TDAB ; TDFB TEAB ; TBA/B ; TFAB ; TGAB ; TJBB ; TEB/B/E | E | 1993 | N6T,NAT | M | + | | 10/85 ▸ 12/91 | 6160274 | **730124** | 601 322 | ALM |
| 2.0 TBCB ; TDAB ; TDFB ; TEAB ; TEBB ; TFAB TGAB ; TJBB ; TBA/B | E | 1993 | NAT | M | - | | 10/85 ▸ 12/91 | 6160271 | **819176** | 602 322 | ALM |
| 2.5 D | D | 2496 | 4AB,4BC,4CA | M | + | | 10/85 ▸ 12/91 | 6160274 | **730124** | 601 322 | ALM |
| **TRANSIT (92>95)** | | | | | | | | | | |
| 2.0,2.0 i EAA/AAS/BAS EBCBBS ; EBA/AAS/ADS/AFS ; EEBAAS ; ECA/AAS BAS ; EGCAAS ; EHBAAL ; EFD/AAL/BAL | E | 1993 | NBA,NCA | M | - | | 06/91 ▸ 08/94 | 1040077 | **819176** | 602 322 | ALM |
| 2.0 i EM | E | 1993 | NCA | M | | | 08/91 ▸ 08/94 | 1040077 | **819176** | 602 322 | ALM |
| 2.5 D EAA/CAS ; EBB/CAS/CDS/CFS/EAS ; ECACAS EDBCAS ; EFBCAL ; EGCCAS ; EHBCAL ; EBD/CBS CDS | D | 2496 | 4BC,4DA | M | - | | 06/91 ▸ 08/94 | 7138208 | **730124** | 601 322 | ALM |
| 2.5 TD EEA/FMS ; EEB/FAS FDS ; EHEFAL ; EHB/FAL/FML/FNL ; EJB/FAL/FME FML/FNE | D | 2496 | 4EA | M | - | | 08/91 ▸ 08/94 | 6912241 | **731492** | 600 359 | CBS |
| 2.5 D EBDEBS ; EDBEAS ; EDDEMS ; EEAEMS ; EBB/EDS EFS ; EFBEAL ; EEB/EAS/EDS ; EHB/EAL/EML ENL ; EJB/EAL/EME/EML/ENE | D | 2496 | 4DA | M | - | | 08/91 ▸ 08/94 | 7138206 | **730124** | 601 322 | ALM |
| **TRANSIT (95>99)** | | | | | | | | | | |
| 2.0 i GPL | G | 1998 | NSH | M | + | | 09/94 ▸ 12/99 | 1112702 | | 700 362 | ALB |
| 2.0 i GPL | G | 1998 | NSH | M | - | TSW | 09/94 ▸ 12/99 | 1030491 | **734862** | 600 333 | ALB |
| 2.0 i | E | 1998 | NSF,NSG | M | + | | 09/94 ▸ 12/99 | 1112702 | | 700 362 | ALB |
| 2.0 i | E | 1998 | NSF,NSG | M | - | TSW | 09/94 ▸ 12/99 | 1030491 | **734862** | 600 333 | ALB |
| 2.5 TD | D | 2496 | 4ED,4GD | M | +/- | | 09/94 ▸ 12/99 | 1023920 | **732497** | 537 359 | CBS |
| 2.5 D,2.5 TD | D | 2496 | 4FA,4FB,4FC,4FD,4GA,4GB,4GC 4GE,4HA,4HB,4HC | M | + | | 09/94 ▸ 12/99 | 1112703 | | 700 360 | CBS |
| 2.5 D,2.5 TD | D | 2496 | 4FA,4FB,4FC,4FD,4GB,4HA,4HB 4HC | M | - | | 09/94 ▸ 12/99 | 7242486 | **731779** | 600 327 | CBS |
| 2.5 TD | D | 2496 | 4EB,4EC,4GA,4GB,4GC,4GE | M | - | | 09/94 ▸ 12/99 | 7242485 | **731782** | 600 359 | CBS |
| 2.5 TD | D | 2496 | 4ED | M | | | 09/97 ▸ 12/99 | 1023920 | **732497** | 537 359 | CBS |
| 2.5 TD | D | 2496 | 4GA,4GB,4GC,4GD,4GE | A | + | | 09/94 ▸ 12/99 | 7045713 | | 600 332 | CBS |
| **TRANSIT (2000>)** | | | | | | | | | | |
| 2.3 i GPL 16V | G | 2295 | E5FC | M | + | | 01/00 ▸ 12/06 | 4572061 | **734292** | 770 400 | ALB |
| 2.3 i 16V | E | 2295 | E5FA | M | +/- | | 01/00 ▸ 12/06 | 4572061 | **734292** | 770 400 | ALB |
| 2.0 TDci,2.0 TDdi FAE/YAB/YD3 ; FAF YAB/YD3 ; FM ; FAG/YAB/YD3 | D | 1998 | ABFA,D3FA-E3,F3FA,FIFA | M | +/- | TSW | 08/00 ▸ 03/04 | 4493553 | **734291** | 770 400 | ALB |
| 2.0 TDci,2.0 TDdi FAE/YAB/YD3 ; FAF YAB/YD3 ; FM ; FAG/YAB/YD3 | D | 1998 | ABFA,D3FA-E3,F3FA,FIFA | M | + | TSW | 08/00 ▸ 12/06 | 4596740 | **734291** | 770 400 | ALB |
| 2.0 TDci,2.0 TDdi FAE/YAB/YD3 ; FAF YAB/YD3 ; FM ; FAG/YAB/YD3 | D | 1998 | ABFA,D3FA-E3,F3FA,FIFA | M | - | | 08/00 ▸ 12/06 | 4719006 | | 671 381 | ALB |
| 2.0 TDci | D | 1998 | FIFA | M | - | TSW | 08/02 ▸ 12/06 | 4596701 | **734293** | 620 400 | ALB |
| 2.0 TDci,2.0 TDdi FAE/YAB/YD3 ; FAF YAB/YD3 ; FM ; FAG/YAB/YD3 | D | 1998 | ABFA,D3FA-E3,F3FA,FIFA | M | - | | 04/05 ▸ 04/06 | 4714582 | | 671 381 | ALB |
| 2.4 TDdi FAB/YD2/YD4/YF4 FAC/YD2/YD4/YF4 ; FAD/YD2/YD4/YF4 ; FMA/YD2 YD4/YF4 ; FMB/YD2/YD4/YF4 ; FMC/YD2/YD4/YF4 FMD/YD2/YD4/YF4 ; FNB/JD2/JD4/JF4 ; FNC/JD2 JD4/JF4 ; FND/JD2/JD4/JF4 | D | 2402 | D2FA,D4FA,DOFE,F4FA | M | +/- | | 01/00 ▸ | 4480903 | **734292** | 770 400 | ALB |
| 2.4 TDdi FAB/YD4/YF4 ; FAC YD4/YF4 ; FAD/YD4/YF4 ; FMA/YD4/YF4 ; FMB YD4/YF4 ; FMC/YD4/YF4 ; FMD/YD4/YF4 ; FNB JD4/JF4 ; FNC/JD4/JF4 ; FND/JD4/JF4 | D | 2402 | D4FA,DOFE,F4FA | M | +/- | TSW | 01/00 ▸ | 4484464 | **734293** | 620 400 | ALB |
| 2.4 TDCi,2.4 TDI,2.4 TDdi F.BY ; FA ; F/ ; FAB Y/YD2/YD4/YF4 ; FAC/Y/YD2/YD4/YF4 ; FD ; FM FAD/Y/YD2/YD4/YF4 ; FMA/Y/YD2/YD4/YF4 ; FMB Y/YD2/YD4/YF4 ; FMC//Y/YD2/YD4/YF4 ; FMD/Y YD2/YD4/YF4 ; FNB/J/JD2/JD4/JF4 ; FNC/J/JD2 JD4/JF4 ; FND/J/JD2/JD4/JF4 | D | 2402 | D2FA,D4FA,DOFE,F4FA,FXFA,H9FA | M | + | | 01/00 ▸ 12/06 | 4572061 | **734292** | 770 400 | ALB |

| Type Ctr. | | CC | | AC | | | OE | Valeo | DIM. | TECH |
|---|---|---|---|---|---|---|---|---|---|---|
| **FORD (.../...)** | | | | | | | | | | |
| **TRANSIT (2000>) (.../...)** | | | | | | | | | | |
| 2.4 TDCi,2.4 TDI,2.4 TDdi FBY ; FA ; F/ ; FAB Y/YD2/YD4/YF4 ; FAC/Y/YD2/YD4/YF4 ; FD ; FM FAD/Y/YD2/YD4/YF4 ; FMA/Y/YD2/YD4/YF4 ; FMB Y/YD2/YD4/YF4 ; FMC//Y/YD2/YD4/YF4 ; FMD/Y YD2/YD4/YF4 ; FNB/J/JD2/JD4/JF4 ; FNC/J/JD2 JD4/JF4 ; FND/J/JD2/JD4/JF4 | D | 2402 | D2FA,D4FA,DOFE,F4FA,FXFA,H9FA | M | - | TSW | 01/00 ▸ 12/06 | 4596701 | **734293** | 620 400 | ALB |
| **TRANSIT (2006>)** | | | | | | | | | | |
| 2.3 i 16V | E | 2261 | 2.3 DURATEC HE | M | + | | 04/06 ▸ | 1383317 | | 769 388 | ALM |
| 2.2 TDCi,2.2 TDCi 110 FAE/6P8/6QV/6QW 2.2 TDCi 115,2.2 TDCi 130 FMF6QV ; FMG6QV 2.2 TDCi 140,2.2 TDCi 85 FAF/6P8/6QV/6QW | D | 2198 | 2.2 DURATORQ,2.2DURATORQTDCI P8FA,QVFA,QWFA,QWFB | M | + | | 04/06 ▸ | 1383317 | | 769 388 | ALM |
| 2.4 TDCi 100,2.4 TDCi 115,2.4 TDCi 120 2.4 TDCi 140 | D | 2402 | H9FC,HPFB,JXFA,JXFB,PHFA,PHFB | M | + | | 04/06 ▸ | 1383317 | | 769 388 | ALM |
| **TRANSIT CONNECT (2002>2006)** | | | | | | | | | | |
| 1.8 i 16V PT2EYP ; PU2EYP | E | 1796 | EYPA | M | + | | 05/02 ▸ 06/06 | 1365996 | **735167** | 702 386 | ALB |
| 1.8 i 16V PT2EYP ; PU2EYP | E | 1796 | EYPA | M | + | | 05/02 ▸ 06/06 | 4367092 | **735043** | 702 386 | |
| 1.8 i 16V PT2EYP ; PU2EYP | E | 1796 | EYPA | M | - | | 05/02 ▸ 06/06 | 4367089 | **735043** | 702 386 | |
| 1.8 TDCi,1.8 TDdi PT2/BHP/HCP ; PU2 BHP/HCP | D | 1753 | D18DI,D18TCI | M | +/- | | 05/02 ▸ 06/06 | 1365996 | **735167** | 702 386 | ALB |
| 1.8 TDCi,1.8 TDdi PT2/BHP/HCP ; PU2 BHP/HCP | D | 1753 | D18DI,D18TCI | M | + | | 05/02 ▸ 06/06 | 4367092 | **735043** | 702 386 | |
| 1.8 TDCi,1.8 TDdi PT2/BHP/HCP ; PU2 BHP/HCP | D | 1753 | D18DI,D18TCI | M | - | | 05/02 ▸ 06/06 | 4367089 | **735043** | 702 386 | |
| **FORD USA** | | | | | | | | | | |
| **PROBE** | | | | | | | | | | |
| 2.0 i 16V T20A9 | E | 1991 | FS | M | | TSW | 10/93 ▸ 12/97 | 3396901 | **731073** | 690 336 | ALB |
| 2.5 i V6 24V T22B9 | E | 2497 | 99B | M | | | 10/92 ▸ 12/97 | 3396903 | | 690 342 | ALB |
| **G.M.E.** | | | | | | | | | | |
| **RASCAL** | | | | | | | | | | |
| 1.0 9918 ; 9917 | E | 970 | F10A | M | | | 01/89 ▸ 10/94 | 91123003 | **731486** | 240 495 | CBS |
| **HONDA** | | | | | | | | | | |
| **ACCORD III (85>89)** | | | | | | | | | | |
| 1.6 CA/452/453 | E | 1598 | A16A1 | M | | TSW 820330 | 10/85 ▸ 08/89 | 19010PH1621 | **730423** | 327 688 | CBS |
| 1.6 CA/452/453 | E | 1598 | A16A1 | M | | TSW 820330 | 08/89 ▸ 08/89 | 19010PH1636 | **730424** | 327 668 | CBS |
| 1.6 CA/462/463 | E | 1598 | A16A1 | A | | TSW 820330 | 10/85 ▸ 08/89 | 19010PH4A12 | **730424** | 327 668 | CBS |
| 1.6 CA/462/463 | E | 1598 | A16A1 | A | | TSW 820330 | 08/89 ▸ 08/89 | 19010PH1636 | **730424** | 327 668 | CBS |
| 2.0,2.0 i CA/552/553/554/556 557/558 | E | 1955 | A20A1-102,A20A2,A20A3,A20A4 | M | | TSW 820330 | 10/85 ▸ 08/89 | 19010PH1635 | **730423** | 327 688 | CBS |
| 2.0,2.0 i CA/552/553/554/556 557/558 | E | 1955 | A20A1-102,A20A2,A20A3,A20A4 | M | | TSW 820330 | 08/89 ▸ 08/89 | 19010PH1636 | **730424** | 327 668 | CBS |
| 2.0,2.0 i CA/553/56/562/563 564/566/567/568 | E | 1955 | A20A1-104,A20A2,A20A3,A20A4 | A | | TSW 820330 | 10/85 ▸ 08/89 | 19010PH4A12 | **730424** | 327 668 | CBS |
| 2.0,2.0 i CA/553/56/562/563 564/566/567 | E | 1955 | A20A1-104,A20A2,A20A4 | A | | TSW 820330 | 08/89 ▸ 08/89 | 19010PH1636 | **730424** | 327 668 | CBS |
| 2.0 i 16V CA/555/559 | E | 1958 | B20A2,B20A8 | M | | TSW 820330 | 02/87 ▸ 08/89 | 19010PH1635 | **730423** | 327 688 | CBS |
| 2.0 i 16V CA/555/559 | E | 1958 | B20A2,B20A8 | M | | TSW 820330 | 08/89 ▸ 08/89 | 19010PH1636 | **730424** | 327 668 | CBS |
| **ACCORD IV (89>93)** | | | | | | | | | | |
| 1.8 CB/152/153 | E | 1849 | F18A2 | M | | | 09/89 ▸ 06/91 | 19010PT1003 | **732323** | 352 668 | CBS |
| 1.8 CB153 | E | 1849 | F18A2 | M | | TSW | 07/91 ▸ 1993 | 19010PT0013 | **731076** | 352 668 | CBS |
| 2.0,2.0 i 16V CB/352/353/354 | E | 1997 | F20A2,F20A3,F20A4,F20A5 | M | | | 09/89 ▸ 06/91 | 19010PT1003 | **732323** | 352 668 | CBS |
| 2.0,2.0 i 16V CB/352/353/354 | E | 1997 | F20A2,F20A3,F20A4,F20A5 | M | | | 09/89 ▸ 1993 | 19010PT1004 | **732323** | 352 668 | CBS |
| 2.0,2.0 i 16V CB/352/353/354 | E | 1997 | F20A2,F20A3,F20A4,F20A5,F20A8 | M | | TSW | 07/91 ▸ 1993 | 19010PT0003 | **731076** | 352 668 | CBS |
| 2.0,2.0 i 16V CB/362/363/364 | E | 1997 | F20A2,F20A3,F20A4,F20A5 | A | | TSW | 09/89 ▸ 1993 | 19010PT1906 | **731100** | 350 668 | ALB |
| 2.0,2.0 i 16V CB/362/363/364 | E | 1997 | F20A2,F20A3,F20A4,F20A5,F20A8 | A | | TSW | 09/89 ▸ 1993 | 19010P39902 | **731100** | 350 668 | ALB |
| 2.2 i 16V CB755 | E | 2156 | F22A3 | M | | | 09/89 ▸ 1993 | 19010PT1004 | **732323** | 352 668 | CBS |
| 2.2 i 16V CB765 | E | 2156 | F22A3 | A | | TSW | 09/89 ▸ 1993 | 19010PT1906 | **731100** | 350 668 | ALB |
| **ACCORD V (93>95)** | | | | | | | | | | |
| 1.8 i CC/752/753 | E | 1849 | F18A3 | M | | TSW | 07/93 ▸ 06/95 | 19010P45G01 | **731471** | 350 678 | ALB |

Radiator Radiateur Motorkühler Radiatore di raffreddamento Radiator Radyatör Radiator Радиатор vízhűtő Vodní chladič Radiator Ψυγείο



• **New** Nouveau **Nuevo** Novo **Nuovo** Nieuw **Neu** Nowość **Yeni** Новый Νέο **Novy**

# HONDA (.../...)

| | | CC | | | AC | | | | OE | Valeo | DIM. | | TECH |
|---|---|---|---|---|---|---|---|---|---|---|---|---|---|
| **ACCORD V (93>95) (.../...)** | | | | | | | | | | | | | |
| 1.8 i | CC/752/753 | E | 1849 | F18A3 | M | | TSW | 07/93 ▸ 06/95 | 19010P45505 | **731076** | 352 | 668 | CBS |
| 2.0 i | CC/751/754/755/756/757 | E | 1997 | F20Z1,F20Z2 | M | | TSW | 03/93 ▸ 06/95 | 19010P45G01 | **731471** | 350 | 678 | ALB |
| 2.0 i | CC/751/754/755/756/757 | E | 1997 | F20Z1,F20Z2 | M | | TSW | 03/93 ▸ 06/95 | 19010P45505 | **731076** | 352 | 668 | CBS |
| 2.0 i | CC/765/766/767 | E | 1997 | F20Z1 | A | | TSW | 03/93 ▸ 06/95 | 19010P45G51 | **734109** | 350 | 678 | ALB |
| 2.3 i | CC758 | E | 2259 | H23A3 | M | | TSW | 07/93 ▸ 06/95 | 19010P44G01 | **731471** | 350 | 678 | ALB |
| **ACCORD VI (CE/CF) (95>98)** | | | | | | | | | | | | | |
| 1.8 i | CE/751/752/753/754/755/756/757 | E | 1849 | F18A3,F18A4 | M | | TSW | 07/95 ▸ | 19010P45G01 | **731471** | 350 | 678 | ALB |
| 1.8 i | CE/751/752/753/754/755/756/757 | E | 1849 | F18A3,F18A4 | M | | TSW | 07/95 ▸ 08/98 | 19010P45505 | **731076** | 352 | 668 | CBS |
| 1.8 i | CE/761/765/766 | E | 1849 | F18A3,F18A4 | A | | TSW | 07/95 ▸ 08/98 | 19010P45G51 | **734109** | 350 | 678 | ALB |
| 2.0 i | CE/854/855/856/857/858 | E | 1997 | F20Z1 | M | | TSW | 07/95 ▸ | 19010P45G01 | **731471** | 350 | 678 | ALB |
| 2.0 i | CE/854/855/856/857/858 | E | 1997 | F20Z1 | M | | TSW | 07/95 ▸ 08/98 | 19010P45505 | **731076** | 352 | 668 | CBS |
| 2.0 i | CE/865/866/867/868 | E | 1997 | F20Z1 | A | | TSW | 07/95 ▸ 08/98 | 19010P45G51 | **734109** | 350 | 678 | ALB |
| 2.2 i | CE/956/957/958 | E | 2156 | F22Z2 | M | | TSW | 07/95 ▸ 08/98 | 19010P44G01 | **731471** | 350 | 678 | ALB |
| **ACCORD VII (98>2003)** | | | | | | | | | | | | | |
| 1.6 i | CG/752/753/754/755 ; CH/572/574/575/576 | E | 1590 | D16B6,D16B7 | M | | TSW | 09/98 ▸ 01/03 | 19010PDAE01 | **734716** | 350 | 677 | ALB |
| 1.8 i | CG/852/853/854/856/857/858 ; CH/671/672/673 674/675/676/677/678 | E | 1849 | F18B2,F18B4 | M | | TSW | 09/98 ▸ 01/03 | 19010PDAE51 | **734717** | 350 | 677 | ALB |
| 1.8 i | CG/852/853/854/856/857/858 | E | 1849 | F18B2 | M | | TSW | 09/98 ▸ 01/03 | 19010PDAE01 | **734716** | 350 | 677 | ALB |
| 1.8 i | CG/862/864/867/868 ; CH/682/684/687/688 | E | 1849 | F18B2 | A | | TSW | 09/98 ▸ 01/03 | 19010PDAE01 | **734716** | 350 | 677 | ALB |
| 1.8 i | CG/862/864/867/868 | E | 1849 | F18B2 | A | | TSW | 09/98 ▸ 01/03 | 19010PDAE51 | **734717** | 350 | 677 | ALB |
| 2.0 i | CG/954/957/958 | E | 1997 | F20B6 | M | | TSW | 09/98 ▸ 01/03 | 19010PDAE01 | **734716** | 350 | 677 | ALB |
| 2.0 i | CH/770/774/777/778/779 | E | 1997 | F20B6 | M | | TSW | 09/98 ▸ 01/03 | 19010PAAA02 | **734114** | 375 | 668 | ALB |
| 2.0 i | CG/964/967/968 | E | 1997 | F20B6 | A | | TSW | 09/98 ▸ 01/03 | 19010PDAE51 | **734717** | 350 | 677 | ALB |
| 2.0 i | CH/780/784/787/788/789 | E | 1997 | F20B6 | A | | TSW | 01/01 ▸ 01/03 | 19010PAAA02 | **734114** | 375 | 668 | ALB |
| 2.3 i | CL/354/355/357/358/472/473/477/478/479 | E | 2254 | F23Z5 | M | | TSW | 11/00 ▸ 01/03 | 19010PDAE01 | **734716** | 350 | 677 | ALB |
| 2.3 i | CL/364/365/367/368/482/483/487/488/489 | E | 2254 | F23Z5 | A | | TSW | 11/00 ▸ 01/03 | 19010PDAE51 | **734717** | 350 | 677 | ALB |
| **ACCORD VIII (2003>2008)** | | | | | | | | | | | | | |
| 2.0 i | CL/751/752/753/754/755/758/759 ; CM/171/172 173/174/175/176/177/178 | E | 1998 | K20A6 | M | | TSW 820334 | 02/03 ▸ 05/08 | 19010RBAE01 | **734703** | 375 | 713 | ALB |
| 2.0 i | CL/762/763/764/765/768/769 ; CM/181/182/183 184/185/186/187/188 | E | 1998 | K20A6 | A | | TSW 820334 | 02/03 ▸ 05/08 | 19010RBA901 | **735050** | 375 | 712 | ALB |
| 2.4 i | CL/964/965/968/969 ; CM/283/284/287/288 | E | 2354 | K24A3 | A | | TSW | 02/03 ▸ 05/08 | 19010RBBE51 | **735049** | 400 | 718 | ALB |
| **ACCORD AERODECK (85>89)** | | | | | | | | | | | | | |
| 2.0,2.0 i | CA/533/534/537/538 | E | 1955 | A20A1-102,A20A2,A20A3,A20A4 | M | | TSW 820330 | 10/85 ▸ 08/89 | 19010PH1635 | **730423** | 327 | 688 | CBS |
| 2.0,2.0 i | CA/533/534/537/538 | E | 1955 | A20A1-102,A20A2,A20A3,A20A4 | M | | TSW 820330 | 08/89 ▸ 08/89 | 19010PH1636 | **730424** | 327 | 668 | CBS |
| 2.0,2.0 i | CA/543/544/547/548 | E | 1955 | A20A1-104,A20A2,A20A3,A20A4 | A | | TSW 820330 | 10/85 ▸ 08/89 | 19010PH4A12 | **730424** | 327 | 668 | CBS |
| **ACCORD AERODECK (90>93)** | | | | | | | | | | | | | |
| 2.0 i 16V | CC974 ; CC975 | E | 1997 | F20Z3 | M | + | | 07/92 ▸ 08/93 | 19010PT1003 | **732323** | 352 | 668 | CBS |
| 2.0 i 16V | CC974 | E | 1997 | F20Z3 | M | | TSW | 07/92 ▸ 08/93 | 19010PT0003 | **731076** | 352 | 668 | CBS |
| 2.2 i 16V | CB874/875/974/975 | E | 2156 | F22A6,F22A7 | M | + | | 07/90 ▸ 08/93 | 19010PT1003 | **732323** | 352 | 668 | CBS |
| 2.2 i 16V | CB874 | E | 2156 | F22A7 | M | | TSW | 07/90 ▸ 08/93 | 19010PT0003 | **731076** | 352 | 668 | CBS |
| 2.2 i 16V | CB/874/875 | E | 2156 | F22A7 | M | | | 07/90 ▸ 06/91 | 19010PT1004 | **732323** | 352 | 668 | CBS |
| 2.2 i 16V | CB/884/885 | E | 2156 | F22A8 | A | | TSW | 07/90 ▸ 06/91 | 19010PT1906 | **731100** | 350 | 668 | ALB |
| 2.2 i 16V | CB/884/885/984/985 | E | 2156 | F22A6,F22A8 | A | | TSW | 07/90 ▸ 08/93 | 19010P39902 | **731100** | 350 | 668 | ALB |
| **ACCORD AERODECK (93>97)** | | | | | | | | | | | | | |
| 2.0 i | CE/282/283/285/286/287/288 | E | 1997 | F20B3 | A | | TSW | 09/93 ▸ 12/97 | 19010P0HA51 | **734109** | 350 | 678 | ALB |
| 2.2 i | CE/181/184/185/186/187/188 | E | 2156 | F22B1,F22B4,F22B5 | A | | TSW | 09/93 ▸ 12/97 | 19010P0HA51 | **734109** | 350 | 678 | ALB |
| **ACCORD COUPE (91>93)** | | | | | | | | | | | | | |
| 2.0 i | CC/114/115 | E | 1997 | F20A7 | M | | TSW | 07/91 ▸ 08/93 | 19010PT0013 | **731076** | 352 | 668 | CBS |
| 2.0 i | CC/124/125 | E | 1997 | F20A7 | A | | TSW | 07/91 ▸ 08/93 | 19010P39902 | **731100** | 350 | 668 | ALB |
| **ACCORD COUPE (93>97)** | | | | | | | | | | | | | |
| 2.0 i | CD/924/925/926 | E | 1997 | F20B3 | A | | TSW | 09/93 ▸ 09/97 | 19010P0HA51 | **734109** | 350 | 678 | ALB |
| 2.2 i | CD/723/724/725/726 | E | 2156 | F22B4,F22B5 | A | | TSW | 09/93 ▸ 09/97 | 19010P0HA51 | **734109** | 350 | 678 | ALB |
| **ACCORD COUPE (97>2002)** | | | | | | | | | | | | | |
| 2.0 i | CG/415/416 | E | 1997 | F20B5 | M | | TSW | 06/98 ▸ 06/02 | 19010PAAA02 | **734114** | 375 | 668 | ALB |
| 2.3 i | CG315 | E | 2254 | F23A3 | M | | TSW | 10/97 ▸ 06/98 | 19010PAAA02 | **734114** | 375 | 668 | ALB |
| 2.3 i | CG315 | E | 2254 | F23A3 | M | | TSW | 07/98 ▸ 06/99 | 19010PAAA01 | **734114** | 375 | 668 | ALB |
| **CIVIC I (72>83)** | | | | | | | | | | | | | |
| 1200 | SFA ; SB/A/C/E | E | 1169 | EB1 | M | | | 09/75 ▸ 07/79 | 19010634003 | | 300 | 378 | CBS |
| **CIVIC II (83>87)** | | | | | | | | | | | | | |
| 1200 | AL431 | E | 1169 | ZA | M | | TSW | 09/83 ▸ 08/87 | 19010PE0033 | **730168** | 352 | 388 | CBS |

# HONDA (.../...)

| | | | CC | | | AC | | | OE | Valeo | DIM. | | TECH |
|---|---|---|---|---|---|---|---|---|---|---|---|---|---|
| **CIVIC II (83>87) (.../...)** | | | | | | | | | | | | | |
| 1300 | AG532 ; AJ542 | E | 1342 | EV2 | M | | TSW | 09/83 ▸ 08/87 | 19010PE0033 | **730168** | 352 | 388 | CBS |
| 1500,1500 i | AK543 ; AH/532/533 537 | E | 1488 | EW2,EW3,EW4 | M | | TSW | 09/83 ▸ 08/87 | 19010PE1013 | **730316** | 350 | 650 | CBS |
| **CIVIC III (87>91)** | | | | | | | | | | | | | |
| 1.2 | EC732 | E | 1238 | D12B1 | M | + | | 09/87 ▸ 1991 | 19010PM5405 | **731635** | 327 | 688 | CBS |
| 1.2 | EC732 ; ED152 | E | 1238 | D12B1 | M | | | 09/87 ▸ 1991 | 19010PM8A02 | **731634** | 327 | 588 | CBS |
| 1.2 | EC732 ; ED152 | E | 1238 | D12B1 | M | | | 09/87 ▸ 1991 | 19010PM4004 | **819193** | 327 | 668 | CBS |
| 1.3 | EC832 | E | 1343 | D13B1 | M | + | | 09/87 ▸ 1991 | 19010PM5405 | **731635** | 327 | 688 | CBS |
| 1.3 | EC832 | E | 1343 | D13B1,D13B2 | M | | | 09/87 ▸ 1991 | 19010PM4004 | **819193** | 327 | 668 | CBS |
| 1.3 | EC832 | E | 1343 | D13B1,D13B2 | M | | | 09/89 ▸ 1991 | 19010PM8A02 | **731634** | 327 | 588 | CBS |
| 1.3 | ED842 | E | 1343 | D13B1 | A | | | 09/87 ▸ 1991 | 19010PM3901 | **730417** | 327 | 668 | CBS |
| 1.3 | ED842 | E | 1343 | D13B1 | A | | | 09/87 ▸ 1991 | 19010PM5405 | **731635** | 327 | 688 | CBS |
| 1.3 | ED842 | E | 1343 | D13B1 | A | | | 09/89 ▸ 1991 | 19010PM8A02 | **731634** | 327 | 588 | CBS |
| 1.4 | EC932 | E | 1396 | D14A1 | M | + | | 09/87 ▸ 1991 | 19010PM5405 | **731635** | 327 | 688 | CBS |
| 1.4 | EC932 ; ED252 | E | 1396 | D14A1 | M | | | 09/87 ▸ 1991 | 19010PM4004 | **819193** | 327 | 668 | CBS |
| 1.4 | EC942 | E | 1396 | D14A1 | A | | | 09/87 ▸ 1991 | 19010PM3901 | **730417** | 327 | 668 | CBS |
| 1.4 | EC942 | E | 1396 | D14A1 | A | | | 09/87 ▸ 1991 | 19010PM5305 | **731635** | 327 | 688 | CBS |
| 1.4 | EC942 ; ED262 | E | 1396 | D14A1 | A | | | 09/87 ▸ 1991 | 19010PM5405 | **731635** | 327 | 688 | CBS |
| 1.4 | ED262 | E | 1396 | D14A1 | A | | | 09/87 ▸ 12/89 | 19010PM4004 | **819193** | 327 | 668 | CBS |
| 1.5 i | ED/634/635 | E | 1493 | D15B1,D15B2 | M | + | | 09/87 ▸ 08/91 | 19010PM5405 | **731635** | 327 | 688 | CBS |
| 1.5 i | ED/634/635 | E | 1493 | D15B1,D15B2 | M | | | 09/87 ▸ 08/91 | 19010PM4004 | **819193** | 327 | 668 | CBS |
| 1.5 i | ED/354/355 | E | 1493 | D15B1,D15B2 | M | | | 09/87 ▸ 08/91 | 19010PM5305 | **731635** | 327 | 688 | CBS |
| 1.5 i | ED/354/355 | E | 1493 | D15B1,D15B2 | M | | | 09/87 ▸ 08/91 | 19010PM3901 | **730417** | 327 | 668 | CBS |
| 1.5 i | ED634 | E | 1493 | D15B1 | M | | | 09/89 ▸ 1991 | 19010PM8A02 | **731634** | 327 | 588 | CBS |
| 1.5 i | ED/364/365/644/645 | E | 1493 | D15B1,D15B2 | A | | | 09/87 ▸ 08/91 | 19010PM5305 | **731635** | 327 | 688 | CBS |
| 1.5 i | ED/364/365/644/645 | E | 1493 | D15B1,D15B2 | A | | | 09/87 ▸ 08/91 | 19010PM3901 | **730417** | 327 | 668 | CBS |
| 1.6 i 16V | ED/736/737 | E | 1590 | D16A6,D16A9,D16Z2 | M | + | | 09/87 ▸ 1991 | 19010PM5405 | **731635** | 327 | 688 | CBS |
| 1.6 i 16V | EE556 ; ED/456/736 737 | E | 1590 | D16A6,D16A7,D16A9,D16Z2 | M | | | 09/87 ▸ 08/91 | 19010PM4004 | **819193** | 327 | 668 | CBS |
| 1.6 i 16V | ED/736/737 | E | 1590 | D16A6,D16A9,D16Z2 | M | | | 09/87 ▸ 1991 | 19010PM3305 | **819193** | 327 | 668 | CBS |
| 1.6 i 16V | ED456 ; EE556 | E | 1590 | D16A6,D16A7,D16Z2 | M | | | 09/87 ▸ 08/91 | 19010PM5305 | **731635** | 327 | 688 | CBS |
| 1.6 i 16V | EE566 | E | 1590 | D16Z2 | A | | | 09/90 ▸ 08/91 | 19010PM5305 | **731635** | 327 | 688 | CBS |
| 1.6 i 16V | EE566 | E | 1590 | D16Z2 | A | | | 09/90 ▸ 08/91 | 19010PM4004 | **819193** | 327 | 668 | CBS |
| 1.6 i 16V | EE938 | E | 1595 | B16A1 | M | | | 08/89 ▸ 1991 | 19010PW0014 | **734623** | 317 | 668 | CBS |
| **CIVIC IV (91>95)** | | | | | | | | | | | | | |
| 1.3 | EG/332/333 | E | 1343 | D13B2 | M | | TSW | 09/91 ▸ 09/95 | 19010P07024 | **731434** | 350 | 346 | ALB |
| 1.5 i | EG/434/435/854/855 ; EJ/212/213 | E | 1493 | D15B2,D15B7 | M | | TSW | 09/91 ▸ 09/95 | 19010P03305 | **731434** | 350 | 346 | ALB |
| 1.5 i | EG/434/435/436/854/855/856 ; EJ/212/213 | E | 1493 | D15B2,D15B7,D15Z1 | M | | TSW | 09/91 ▸ 09/95 | 19010P07024 | **731434** | 350 | 346 | ALB |
| 1.5 i | EJ223 | E | 1493 | D15B7 | A | | TSW | 09/91 ▸ 09/95 | 19010P07024 | **731434** | 350 | 346 | ALB |
| 1.5 i | EJ223 ; EG/444/445/864/865 | E | 1493 | D15B2,D15B7 | A | | TSW | 09/91 ▸ 09/95 | 19010P03305 | **731434** | 350 | 346 | ALB |
| 1.6 i,1.6 i 16V | EG/538 ; EJ113 ; EH 158/954/958 | E | 1590 | D16A7,D16Z6,D16Z7,D16Z9 | M | | TSW | 09/91 ▸ 09/95 | 19010P28A03 | **731434** | 350 | 346 | ALB |
| 1.6 i | EG/548 ; EJ230 ; EH/168/968 | E | 1590 | D16Z6,D16Z7,D16Z9 | A | | TSW | 09/91 ▸ 09/95 | 19010P28G52 | **731459** | 350 | 348 | ALB |
| 1.6 i | EG/639/959 | E | 1595 | B16A2 | M | | TSW | 09/91 ▸ 09/95 | 19010P30G03 | **731469** | 350 | 355 | ALB |
| **CIVIC V (MA/MB) (95>2001)** | | | | | | | | | | | | | |
| 1.4 i | MA/871/872/873/874/875/876/877 ; MB/273/274 275/276 | E | 1396 | D14A2,D14A5,D14A7,D14A8 | M | | TSW | 01/95 ▸ 03/01 | 19010P1KE01 | **731434** | 350 | 346 | ALB |
| 1.4 i | MA/882/883/884/885/886/887 ; MB/285/286 | E | 1396 | D14A2,D14A8 | A | | TSW | 01/95 ▸ 03/01 | 19010P1KE51 | **731458** | 349 | 346 | ALB |
| 1.5 i | MA/971/972/973/974 ; MB/373/374 | E | 1493 | D15Z3,D15Z8 | M | | TSW | 01/95 ▸ 03/01 | 19010P1KE01 | **731434** | 350 | 346 | ALB |
| 1.6 i | MB/172/173/174/175/176/177 | E | 1590 | D16Y2,D16Y3 | M | | TSW | 01/95 ▸ 06/96 | 19010P1KE01 | **731434** | 350 | 346 | ALB |
| 1.6 i | MB/182/183/184/185/485 | E | 1590 | D16Y3 | A | | TSW | 01/95 ▸ 03/01 | 19010P1KE51 | **731458** | 349 | 346 | ALB |
| 1.6 i | MB/476/477/485 | E | 1595 | D16B2 | M | | TSW | 07/96 ▸ 03/01 | 19010P1KE01 | **731434** | 350 | 346 | ALB |
| 1.6 i | MB/486/487 | E | 1595 | D16B2 | A | | TSW | 07/96 ▸ 03/01 | 19010P1KE51 | **731458** | 349 | 346 | ALB |
| 2.0 TDi | MB/77/773 | D | 1994 | 20T2N12,20T2N23 | M | | TSW | 07/96 ▸ 03/01 | 19010PFTE00 | **734290** | 322 | 503 | ALM |
| **CIVIC V (EJ*) (96>2000)** | | | | | | | | | | | | | |
| 1.6 i | EJ/611/612/613/614/616/617/618/619/715 | E | 1590 | D16Y6,D16Y7 | M | | TSW | 07/98 ▸ 03/00 | 19010P2J013 | **731434** | 350 | 346 | ALB |
| 1.6 i | EJ/621/622/623/624/626/627/628/629/725/726 | E | 1590 | D16Y6,D16Y7 | A | | TSW | 03/96 ▸ 06/98 | 19010P2FA51 | **731474** | 350 | 348 | ALB |
| 1.6 i | EJ/821/824/825/827/829 | E | 1590 | D16Y8 | A | | TSW | 07/98 ▸ 03/00 | 19010P2J902 | **731459** | 350 | 348 | ALB |
| **CIVIC V (EJ/EK) (95>2001)** | | | | | | | | | | | | | |
| 1.4 i | EJ/933/934/954 | E | 1396 | D14A3,D14A4 | M | | TSW | 10/95 ▸ 03/01 | 19010P2J003 | **731434** | 350 | 346 | ALB |
| 1.4 i | EJ/933/934/954 | E | 1396 | D14A3,D14A4 | M | | TSW | 10/95 ▸ | 19010P2J004 | **731434** | 350 | 346 | ALB |
| 1.5 i | EK/336/356 | E | 1493 | D15Z6 | M | | TSW | 10/95 ▸ 03/01 | 19010P2J003 | **731434** | 350 | 346 | ALB |
| 1.5 i | EK/336/356 | E | 1493 | D15Z6 | M | | TSW | 10/95 ▸ | 19010P2J004 | **731434** | 350 | 346 | ALB |
| 1.6 i | EK/436/456 | E | 1595 | B16A2 | M | | TSW | 10/95 ▸ 03/01 | 19010P2TG01 | **731469** | 350 | 355 | ALB |

Radiator Ψυγείο Vodní chladič Radiator vízhűtő Радиатор Radiador Radiator Radyatör Radiator Radiatore di raffreddamento Motorkühler Radiateur Radiator



• **New** Nouveau **Nuevo** Novo **Nuovo** Nieuw **Neu** Nowość **Yeni** Новый Νέο **Novy**

# HONDA (.../...)

| | | | CC | | | AC | | | OE | Valeo | DIM. | TECH |
|---|---|---|---|---|---|---|---|---|---|---|---|---|
| **CIVIC V (EJ/EK) (95>2001) (.../...)** | | | | | | | | | | | | |
| 1.6 i | EM1 | E | 1595 | B16A-155,B16A-185 | M | | TSW | 04/99 ▸ 03/01 | 19010P30G03 | **731469** | 350 355 | ALB |
| **CIVIC (EP) (2001>)** | | | | | | | | | | | | |
| 1.4 i 16V | ES453 | E | 1396 | D14Z5 | M | | TSW 820334 | 04/01 ▸ 06/06 | 19010PLCJ51 | **734723** | 658 350 | |
| 1.4 i 16V,1.4 i Sport 16V | EP/132/134/135/136 137 ; EU/572/574/771/772/774/776 | E | 1396 | D14Z5,D14Z6 | M | | | 04/01 ▸ 06/06 | 19010PMAE01 | | | |
| 1.4 i 16V | ES463 | E | 1396 | D14Z5 | A | | TSW 820334 | 04/01 ▸ 06/06 | 19010PLCJ51 | **734723** | 658 350 | |
| 1.6 i VTEC 16V | ES/553/554/555/556 557/559 | E | 1590 | D16W7 | M | | TSW 820334 | 04/01 ▸ 06/06 | 19010PLCJ51 | **734723** | 658 350 | |
| 1.6 i VTEC 16V | EP/232/234/235/236 237/238/239 ; EU/672/674/677/872/874/877 | E | 1590 | D16V1,D16W7 | M | | | 04/01 ▸ 06/06 | 19010PMAE01 | | | |
| 1.6 i VTEC 16V | ES/563/564/565/566 567/569 | E | 1590 | D16W7 | A | | TSW 820334 | 04/01 ▸ 06/06 | 19010PLCJ51 | **734723** | 658 350 | |
| 1.6 i VTEC 16V | EP246 ; EU687 | E | 1590 | D16V1,D16W7 | A | | | 04/01 ▸ 06/06 | 19010PMAE01 | | | |
| 1.7 i 16V,1.7 i VTEC 16V | EM/213/215/218/219 | E | 1668 | D17A8,D17A9 | M | | TSW 820334 | 04/01 ▸ 06/06 | 19010PMMA02 | **734723** | 658 350 | |
| 1.7 i 16V,1.7 i VTEC 16V | EM/223/225/228/229 | E | 1668 | D17A8,D17A9 | A | | TSW 820334 | 04/01 ▸ 06/06 | 19010PMMA52 | **734723** | 658 350 | |
| 2.0 i VTEC 16V | EP/335/336 | E | 1998 | K20A2 | M | | TSW 820334 | 09/01 ▸ 06/06 | 19010PRA003 | **734702** | 350 658 | |
| **CIVIC (FK/FD) (2006>)** | | | | | | | | | | | | |
| 1.4 i,1.4 i-VTEC | FK174 | E | 1339 | L13A7-1-2,L13A7-3 | M | | | 01/06 ▸ | 19010RSHE01 | **735241** | 325 632 | ALB |
| 1.4 i,1.4 i-VTEC | FK184 | E | 1339 | L13A7-1-2,L13A7-3 | A | | | 01/06 ▸ | 19010RSHE01 | **735241** | 325 632 | ALB |
| 1.6 i-VTEC 16V | FD/452/454 | E | 1595 | R16A1 | M | | | 01/06 ▸ 06/09 | 19010RNAA01 | **735238** | 375 671 | ALB |
| 1.6 i-VTEC 16V | FD/462/464 | E | 1595 | R16A1 | A | | | 01/06 ▸ 06/09 | 19010RNAA01 | **735238** | 375 671 | ALB |
| 1.8 i 16V,1.8 i-VTEC 16V | FD/152/154/157 ; FK 276/278 ; FN/132/134/136 | E | 1799 | R18A1 | M | | | 01/06 ▸ | 19010RSAG01 | **735243** | 375 671 | ALB |
| 1.8 i 16V,1.8 i-VTEC 16V | FK288 ; FD/162/164 167 ; FN/142/144/146 | E | 1799 | R18A1 | A | | | 01/06 ▸ | 19010RSAG01 | **735243** | 375 671 | ALB |
| 2.2 i-CTDi 16V<br>2.2 iCDTi 16V | FK/374/376/378 ; FN 332/334/336 | D | 2204 | N22A1,N22A2,N22A2/F | M | | | 01/06 ▸ | 19010RSRE01 | **735242** | 375 671 | ALB |
| **CIVIC AERODECK (97>)** | | | | | | | | | | | | |
| 1.4 i | MB/873/874/875/876/877/878 | E | 1396 | D14A7,D14A8 | M | | TSW | 09/97 ▸ 03/01 | 19010P1KE01 | **731434** | 350 346 | ALB |
| 1.4 i | MB/885/887 | E | 1396 | D14A7,D14A8 | A | | TSW | 09/97 ▸ 03/01 | 19010P1KE51 | **731458** | 349 346 | ALB |
| 1.5 i VTEC | MB/974/975/976 | E | 1493 | D15Z8 | M | | TSW | 09/97 ▸ 03/01 | 19010P1KE01 | **731434** | 350 346 | ALB |
| 1.6 i | MC175 | E | 1590 | D16W4 | M | | TSW | 09/97 ▸ 03/01 | 19010P1KE01 | **731434** | 350 346 | ALB |
| 1.6 i | MC176 | E | 1595 | D16B2 | M | | TSW | 09/97 ▸ 03/01 | 19010P1KE01 | **731434** | 350 346 | ALB |
| 2.0 iTD,2.0 iTD 105<br>2.0 iTD 90 | MC/374/375/377 | D | 1994 | 20T2N,20T2R | M | | TSW | 04/98 ▸ 03/01 | 19010PFTE00 | **734290** | 322 503 | ALM |
| **CIVIC SHUTTLE (83>87)** | | | | | | | | | | | | |
| 1500 | AG652 ; AN552 | E | 1488 | EW2,EW2C | M | | TSW | 09/83 ▸ 08/87 | 19010PE1014 | **730316** | 350 650 | CBS |
| **CIVIC SHUTTLE (87>)** | | | | | | | | | | | | |
| 1.4 | EE172 | E | 1396 | D14A1 | M | | | 11/87 ▸ 09/91 | 19010PM4004 | **819193** | 327 668 | CBS |
| 1.4 | EE182 | E | 1396 | D14A1 | A | | | 11/87 ▸ 09/91 | 19010PM5305 | **731635** | 327 688 | CBS |
| 1.5 i | EE275 | E | 1493 | D15B2 | M | | | 11/87 ▸ 09/91 | 19010PM3305 | **819193** | 327 668 | CBS |
| 1.5 i | EE275 | E | 1493 | D15B2 | M | | | 11/87 ▸ 09/91 | 19010PM5405 | **731635** | 327 688 | CBS |
| 1.5 i | EE285 | E | 1493 | D15B2 | A | | | 11/87 ▸ 09/91 | 19010PM5405 | **731635** | 327 688 | CBS |
| 1.6 i 16V | EE476 | E | 1590 | D16A6,D16A7,D16Z2 | M | | | 09/87 ▸ 1992 | 19010PM5405 | **731635** | 327 688 | CBS |
| 1.6 i 16V | EE476 | E | 1590 | D16A6,D16A7,D16Z2 | M | | | 09/87 ▸ 1992 | 19010PM4004 | **819193** | 327 668 | CBS |
| 1.6 i 16V | EE486 | E | 1590 | D16Z2 | A | | | 08/89 ▸ 1992 | 19010PM5305 | **731635** | 327 688 | CBS |
| **CONCERTO** | | | | | | | | | | | | |
| 1.4 | HW/HLL/HWL | E | 1396 | D14A1 | M | | TSW | 10/89 ▸ 08/91 | 19010SK4E00 | **730565** | 525 377,5 | ALM |
| 1.5 i | HW/HWP/LPT | E | 1493 | D15B2 | M | | TSW | 07/90 ▸ 09/95 | 19010SK4E00 | **730565** | 525 377,5 | ALM |
| 1.6,1.6 i 16V | HW/MLW/MWW/WLN/WLU WWN/WWU/YLM/YLW/YWM/YWW/ZLN/ZWN | E | 1590 | D16A8,D16A9,D16Z1,D16Z2 | M | | TSW | 10/89 ▸ 09/94 | 19010SK4E00 | **730565** | 525 377,5 | ALM |
| **CR-V (97>2002)** | | | | | | | | | | | | |
| 2.0 i | RD/184/185 | E | 1973 | B20B3,B20Z1 | A | | TSW 820334 | 01/97 ▸ 09/97 | 19010P3F901 | **734110** | 350 660 | ALB |
| 2.0 i | RD/184/185/186/385 | E | 1973 | B20B,B20B3,B20Z1 | A | | TSW 820334 | 09/97 ▸ 02/02 | 19010P3F902 | **734110** | 350 660 | ALB |
| **CR-V (2002>2006)** | | | | | | | | | | | | |
| 2.0 i VTEC 16V | RD/871/872/876/877 | E | 1998 | K20A4 | M | | TSW 820334 | 03/02 ▸ 12/06 | 19010PNLG01 | **734476** | 400 738 | ALB |
| 2.0 i VTEC 16V | RD879 | E | 1998 | K20A4 | M | | TSW 820334 | 03/02 ▸ 12/06 | 19010PNLG51 | **734477** | 400 738 | ALB |
| 2.0 i VTEC 16V | RD/881/882/886/887 889 | E | 1998 | K20A4 | A | | TSW 820334 | 03/02 ▸ 12/06 | 19010PNLG51 | **734477** | 400 738 | ALB |
| **CRX (AF/AS) (83>88)** | | | | | | | | | | | | |
| 1.5 i | AF532 | E | 1488 | EW3 | M | | TSW | 09/83 ▸ 08/87 | 19010PE0033 | **730168** | 352 388 | CBS |

# HONDA (.../...)

| Type Ctr. | | CC | | AC | | 2+3 | OE | Valeo | DIM. | | TECH |
|---|---|---|---|---|---|---|---|---|---|---|---|
| **CRX (AF/AS) (83>88) (.../...)** | | | | | | | | | | | |
| 1.5 i AF532 | E | 1488 | EW3 | M | | TSW | 09/83 ▸ 08/87 | 19010PE1014 | **730316** | 350 | 650 | CBS |
| 1.6 i AS533 | E | 1590 | ZC1 | M | | TSW | 03/86 ▸ 07/88 | 19010PE1666 | **730316** | 350 | 650 | CBS |
| **CRX (EE/ED) (87>92)** | | | | | | | | | | | |
| 1.4 EE632 | E | 1396 | D14A1 | M | | | 09/89 ▸ 02/92 | 19010PM3305 | **819193** | 327 | 668 | CBS |
| 1.4 EE642 | E | 1396 | D14A1 | A | | | 09/89 ▸ 02/92 | 19010PM3305 | **819193** | 327 | 668 | CBS |
| 1.5 i EF610 | E | 1493 | D15B1 | M | | | 09/87 ▸ 07/88 | 19010PM3305 | **819193** | 327 | 668 | CBS |
| 1.6 i 16V ED/936/937 | E | 1590 | D16A6,D16A7,D16A8,D16A9,D16Z5 | M | | | 09/87 ▸ 02/92 | 19010PM3305 | **819193** | 327 | 668 | CBS |
| 1.6 i 16V EE838 | E | 1595 | B16A1 | M | | | 08/89 ▸ 02/92 | 19010PM3305 | **819193** | 327 | 668 | CBS |
| **CRX (EG/EH) (92>98)** | | | | | | | | | | | |
| 1.6 i EH/616/618 | E | 1590 | D16Z6,D16Z7 | M | | TSW | 03/92 ▸ 06/95 | 19010P07024 | **731434** | 350 | 346 | ALB |
| 1.6 i EH/616/618 | E | 1590 | D16Y8 | M | | TSW | 07/95 ▸ 12/98 | 19010P30G03 | **731469** | 350 | 355 | ALB |
| 1.6 i EH/626/628 | E | 1590 | D16Z6,D16Z7 | A | | TSW | 03/92 ▸ 06/95 | 19010P07024 | **731434** | 350 | 346 | ALB |
| 1.6 i EH/626/628 | E | 1590 | D16Z6,D16Z7 | A | | TSW | 03/92 ▸ 06/95 | 19010P28G52 | **731459** | 350 | 348 | ALB |
| 1.6 i EG/217/219 | E | 1595 | B16A2 | M | | TSW | 03/92 ▸ 12/98 | 19010P30G03 | **731469** | 350 | 355 | ALB |
| **HR-V** | | | | | | | | | | | |
| 1.6 i 16V,1.6 i VTEC 16V GH/134/135/234/235 237/238/375/376/473/475/476/477/478 | E | 1590 | D16W1,D16W5 | M | | TSW 820334 | 10/98 ▸ 09/05 | 19010PEL003 | **734117** | 350 | 348 | ALB |
| 1.6 i 16V GH/144/145/244/245 385/386/483/485/486 | E | 1590 | D16W1 | A | | type Denso | 10/98 ▸ 09/05 | 19010PELJ51 | | 350 | 348 | ALB |
| **INTEGRA (DA) (86>93)** | | | | | | | | | | | |
| 1.5 DA472 | E | 1493 | D15A1 | M | | TSW | 03/85 ▸ 11/89 | 19010PG7305 | **731467** | 327 | 668 | CBS |
| 1.6 i 16V DA/175/335 | E | 1590 | D16A2,D16A3 | M | | TSW | 03/85 ▸ 11/89 | 19010PG7305 | **731467** | 327 | 668 | CBS |
| **INTEGRA (2001>)** | | | | | | | | | | | |
| 2.0 i 16V | E | 1998 | K20A-220,K20A3 | M | | TSW | 09/01 ▸ | 19010PG7305 | **731467** | 327 | 668 | CBS |
| **JAZZ (2002>)** | | | | | | | | | | | |
| 1.2 i GD/573/575/577/578 | E | 1243 | L12A1 | M | | TSW 820334 | 01/02 ▸ 10/08 | 19010PWAG01 | **734218** | 325 | 376 | ALB |
| 1.4 i GD/173/175/176/177/178 | E | 1339 | L13A1 | M | | TSW 820334 | 01/02 ▸ 10/08 | 19010PWAG01 | **734218** | 325 | 376 | ALB |
| 1.4 i GD/185/186/187/188 | E | 1339 | L13A1 | A | | TSW 820334 | 01/02 ▸ 10/08 | 19010PWAG01 | **734218** | 325 | 376 | ALB |
| **LEGEND (85>90)** | | | | | | | | | | | |
| 2.5 HS/SLP/ZLP | E | 2493 | C25A1,C25A2 | M | | | 11/85 ▸ 09/87 | 19010PN7750 | **730591** | 625 | 418 | CBS |
| 2.5 HS/SLP/ZLP | E | 2493 | C25A1,C25A2 | A | | | 11/85 ▸ 09/87 | 19010PN7762 | **730970** | 625 | 418 | CBS |
| 2.7 HS/ELN/ZLN | E | 2675 | C27A2 | M | | | 07/87 ▸ 09/88 | 19010PN7750 | **730591** | 625 | 418 | CBS |
| 2.7 HSSLN | E | 2675 | C27A2 | A | | | 09/87 ▸ 09/90 | 19010PN7762 | **730970** | 625 | 418 | CBS |
| **LEGEND (90>96)** | | | | | | | | | | | |
| 3.2 i 24V KA/755/815 | E | 3206 | C32A2 | M | | | 10/90 ▸ 02/96 | 19010PY3A02 | **731630** | 425 | 704 | CBS |
| 3.2 i 24V KA/765/825 | E | 3206 | C32A2 | A | | | 10/90 ▸ 02/96 | 19010PY3902 | **731629** | 425 | 704 | ALB |
| **ODYSSEY** | | | | | | | | | | | |
| 2.2 i 16V RA/181/182 | E | 2156 | F22B8 | A | | TSW | 07/97 ▸ 12/00 | 19010PEA901 | **734112** | 425 | 678 | ALB |
| **PRELUDE III (84>92)** | | | | | | | | | | | |
| 2.0,2.0 i 16V BA/413/414/417/418 | E | 1958 | B20A3,B20A4,B20A5,B20A7,B20A9 | M | | TSW 820330 | 09/87 ▸ 09/91 | 19010PK1662 | **730430** | 325 | 668 | CBS |
| 2.0,2.0 i 16V BA/413/414/417/418 | E | 1958 | B20A3,B20A4,B20A5,B20A7 | M | | TSW 820330 | 09/87 ▸ 09/91 | 19010PK1305 | **730430** | 325 | 668 | CBS |
| 2.0,2.0 i 16V BA/414/417/418 | E | 1958 | B20A3,B20A5,B20A7 | M | | TSW 820330 | 09/87 ▸ 09/91 | 19010PK2663 | **730430** | 325 | 668 | CBS |
| 2.0,2.0 i 16V BA/423/424/427/428 | E | 1958 | B20A3,B20A4,B20A7,B20A9 | A | | TSW 820330 | 09/87 ▸ 09/91 | 19010PK3A53 | **730429** | 327 | 668 | CBS |
| **PRELUDE IV (91>96)** | | | | | | | | | | | |
| 2.0 i 16V BB314 | E | 1997 | F20A4 | M | | TSW | 10/91 ▸ 09/96 | 19010PT0013 | **731076** | 352 | 668 | CBS |
| 2.0 i 16V BB324 | E | 1997 | F20A4 | A | | TSW | 10/91 ▸ 09/96 | 19010P39902 | **731100** | 350 | 668 | ALB |
| 2.2 i 16V BB/117/118 | E | 2157 | H22A2 | M | | TSW 820335 | 07/92 ▸ 09/96 | 19010P14A02 | **734624** | 375 | 698 | ALB |
| 2.3 i 16V BB/215/216 | E | 2259 | H23A2 | M | | TSW | 10/91 ▸ 09/96 | 19010PT0003 | **731076** | 352 | 668 | CBS |
| 2.3 i 16V BB/225/226 | E | 2259 | H23A2 | A | | | 10/91 ▸ 09/96 | 19010P14A12 | | | | |
| **PRELUDE IV (96>2001)** | | | | | | | | | | | |
| 2.0 i 16V BB924 | E | 1997 | F20A4 | A | | TSW | 10/96 ▸ 03/01 | 19010P0DJ51 | **734109** | 350 | 678 | ALB |
| 2.2 i BB524 | E | 2156 | F22A2 | A | | TSW | 10/96 ▸ 09/01 | 19010P0DJ51 | **734109** | 350 | 678 | ALB |
| 2.2 i VTEC BB615 | E | 2157 | H22A5-200 | M | | TSW | 10/96 ▸ 09/00 | 19010P0A902 | **734109** | 350 | 678 | ALB |
| 2.2 i VTEC BB/614/815 | E | 2157 | H22A5-185,H22A5-200 | M | | TSW | 10/96 ▸ 09/00 | 19010P0FJ02 | **731471** | 350 | 678 | ALB |
| 2.2 i VTEC BB/624/825 | E | 2157 | H22A5-185 | A | | TSW | 10/96 ▸ 03/01 | 19010P0A902 | **734109** | 350 | 678 | ALB |
| **SHUTTLE** | | | | | | | | | | | |
| 2.2 i 16V RA/181/182/183/184 187 | E | 2156 | F22B8 | A | | TSW | 12/94 ▸ 02/98 | 19010P1EA51 | **734112** | 425 | 678 | ALB |

Radiator Ψυγείο Vodní chladič Radiator vízhűtő Радиатор Radiador Radiator Radyatör Radiator Radiatore di raffreddamento Motorkühler Radiateur Radiator



• **New** Nouveau **Nuevo** Novo **Nuovo** Nieuw **Neu** Nowość **Yeni** Новый Νέο **Novy**

| Type Ctr. | | CC | | AC | | | OE | Valeo | DIM. | TECH |
|---|---|---|---|---|---|---|---|---|---|---|
| **HONDA (.../...)** | | | | | | | | | | |
| **SHUTTLE (.../...)** | | | | | | | | | | |
| 2.2 i 16V RA/182/183/184/187 | E | 2156 | F22B8 | A | | TSW | 12/94 ▸ 02/98 | 19010P1EE51 | **734747** | 425 678 | ALB |
| 2.3 i 16V RA381 | E | 2254 | F23A7 | A | | TSW | 01/98 ▸ 10/00 | 19010PEA901 | **734112** | 425 678 | ALB |
| **STREAM** | | | | | | | | | | |
| 2.0 i VTEC 16V RN/384/385 | E | 1998 | K20A1 | A | | | 03/01 ▸ 09/05 | 19010PNAG51 | **734478** | 400 698 | ALB |
| **HYUNDAI** | | | | | | | | | | |
| **ACCENT (94>99)** | | | | | | | | | | |
| 1.3 i UF2LE ; UA3LE ; UD2LE ; UA2LE ; VF2LE VD2LE ; VD3LE ; VA2LE ; VA3LE ; VF3LE UF3LE ; UD3LE | E | 1341 | G4EH62 | M | +/- | | 07/94 ▸ 05/96 | 2531022020 | | 450 516,6 | ALB |
| 1.3 i VA2LE ; UD2LE ; UF3LE ; UA2LE ; VF3LE VD2LE ; VF2LE ; UD3LE ; VD3LE ; VA3LE UA3LE ; UF2LE | E | 1341 | G4EH62 | M | +/- | TSW 820336 | 05/96 ▸ 09/99 | 2531022025 | **732488** | 335 588 | CBS |
| 1.3 i VF3LA ; VA3LA ; VD3LA ; VF2LA ; VA2LA VD2LA | E | 1341 | G4EH62 | A | +/- | | 07/94 ▸ 05/96 | 2531022070 | | 375 535,8 | ALB |
| 1.3 i VA3LA ; VD2LA ; VF2LA ; VD3LA ; VF3LA VA2LA | E | 1341 | G4EH62 | A | +/- | | 05/96 ▸ 09/99 | 2531022250 | | 335 603 | ALB |
| 1.3 i VF2LA ; VF3LA | E | 1341 | G4EH62 | A | | | 08/94 ▸ 08/94 | 2531022050 | | 375 535,8 | ALB |
| 1.5 i 12V VD3NE ; UA3NE VD2NE ; VA2NE ; UD2NE ; VF3NE ; VF2NE UF3NE ; UF2NE ; UD3NE ; UA2NE ; VA3NE | E | 1495 | G4EK-88 | M | +/- | | 07/94 ▸ 05/96 | 2531022020 | | 450 516,6 | ALB |
| 1.5 i 12V VA3NE ; UA2NE UF2NE ; UA3NE ; UF3NE ; VD3NE ; VA2NE VF3NE ; UD2NE ; VF2NE ; VD2NE ; UD3NE | E | 1495 | G4EK-88 | M | +/- | TSW 820336 | 05/96 ▸ 09/99 | 2531022025 | **732488** | 335 588 | CBS |
| 1.5 i VD2.E ; VA3.E ; UA2.E ; VF2.E ; UF3.E VD3.E ; VA2.E ; UD2.E ; UD3.E ; VF3.E UF2.E ; UA3.E | E | 1495 | G4FK-99 | M | | | 07/94 ▸ 09/99 | 2531022020 | | 450 516,6 | ALB |
| 1.5 i VD2.E ; UF3.E ; UA2.E ; UF2.E ; UD3.E VF3.E ; VA3.E ; VD3.E ; VA2.E ; UA3.E VF2.E ; UD2.E | E | 1495 | G4FK-99 | M | | TSW 820336 | 07/94 ▸ 09/99 | 2531022025 | **732488** | 335 588 | CBS |
| 1.5 i 12V UD3NA ; VA2NA VF2NA ; UA3NA ; UF2NA ; UA2NA ; VD2NA VD3NA ; VF3NA ; UF3NA ; VA3NA ; UD2NA | E | 1495 | G4EK-88 | A | +/- | | 07/94 ▸ 05/96 | 2531022070 | | 375 535,8 | ALB |
| 1.5 i 12V UD2NA ; UF2NA VA2NA ; VA3NA ; VF2NA ; VF3NA ; UA3NA UF3NA ; UD3NA ; VD3NA ; UA2NA ; VD2NA | E | 1495 | G4EK-88 | A | +/- | | 05/96 ▸ 09/99 | 2531022250 | | 335 603 | ALB |
| 1.5 i UF3.A ; VA3.A ; UA2.A ; VD2.A ; UF2.A UD2.A ; VF3.A ; UD3.A ; VA2.A ; VD3.A UA3.A ; VF2.A | E | 1495 | G4FK-99 | A | | | 07/94 ▸ 09/99 | 2531022020 | | 450 516,6 | ALB |
| 1.5 i VA3.A ; UA3.A ; VD2.A ; UF3.A ; UD3.A VD3.A ; UA2.A ; VF3.A ; VA2.A ; VF2.A UD2.A ; UF2.A | E | 1495 | G4FK-99 | A | | TSW 820336 | 07/94 ▸ 09/99 | 2531022025 | **732488** | 335 588 | CBS |
| 1.5 i 12V VF3NA ; VF2NA | E | 1495 | G4EK-88 | A | | | 08/94 ▸ 08/94 | 2531022050 | | 375 535,8 | ALB |
| **ACCENT (99>2003)** | | | | | | | | | | |
| 1.3 i | E | 1341 | G4EH44,G4EH55,G4EH62 | M | +/- | TSW | 10/99 ▸ 01/03 | 2531025050 | **734266** | 335 323 | |
| 1.3 i | E | 1341 | G4EH55,G4EH62 | A | +/- | | 10/99 ▸ 01/03 | 2531025100 | **734253** Case | 335 600 | CBS |
| 1.5 i,1.5 i 16V | E | 1495 | G4EK-90,G4FK-102 | M | +/- | TSW | 10/99 ▸ 01/03 | 2531025050 | **734266** | 335 323 | |
| 1.5 i | E | 1495 | G4EK-90 | A | +/- | | 10/99 ▸ 01/03 | 2531025100 | **734253** Case | 335 600 | CBS |
| 1.5 i 16V | E | 1495 | G4FK-102 | A | | | 10/99 ▸ 01/03 | 2531025150 | | 335 644,8 | ALB |
| 1.5 CRDi 12V | D | 1493 | D3-EA | M | +/- | | 04/02 ▸ 01/03 | 2531025810 | •**735589** | 360 468 | ALB |
| **ACCENT (2003>2006)** | | | | | | | | | | |
| 1.6 i 16V | E | 1599 | G4ED | M | | | 02/03 ▸ 12/06 | 2531025152 | **734960** | 335 643 | ALB |
| 1.6 i 16V | E | 1599 | G4ED | A | | | 02/03 ▸ 12/06 | 2531025152 | **734960** | 335 643 | ALB |
| **ACCENT (2006>)** | | | | | | | | | | |
| 1.4 i 16V | E | 1399 | G4EE | M | +/- | | 06/06 ▸ | 253101E001 | •**735586** | 375 648 | ALB |
| 1.6 i 16V | E | 1599 | G4EE | M | +/- | | 06/06 ▸ | 253101E001 | •**735586** | 375 648 | ALB |
| **AMICA** | | | | | | | | | | |
| 1.0 i 12V MX5G1 | E | 999 | G4HC | M | +/- | | 02/00 ▸ 06/01 | 2531002100 | **734255** | 355 400 | ALB |
| 1.0 i 12V | E | 999 | G4HC | M | | | 07/01 ▸ 12/03 | 2531002100 | **734255** | 355 400 | ALB |
| 1.0 i 12V MX5G1 | E | 999 | G4HC | A | +/- | | 02/00 ▸ 08/00 | 2531002151 | **734254** | 355 400 | ALB |
| 1.0 i 12V | E | 999 | G4HC | A | | | 09/00 ▸ 12/03 | 2531002100 | **734255** | 355 400 | ALB |
| **ATOS** | | | | | | | | | | |
| 1.0 i 12V AC51G ; AB51G | E | 999 | G4HC | M | +/- | | 01/98 ▸ 06/01 | 2531002100 | **734255** | 355 400 | ALB |

# HYUNDAI (.../...)

## ATOS (.../...)

| | | | CC | | | AC | | | OE | Valeo | DIM. | | TECH |
|---|---|---|---|---|---|---|---|---|---|---|---|---|---|
| 1.0 i 12V | AC51G | E | 999 | G4HC | M | +/- | | 03/98 ▸ 07/98 | 2531002150 | **734254** | 355 | 400 | ALB |
| 1.0 i 12V | AC51G | E | 999 | G4HC | M | +/- | | 07/98 ▸ 06/01 | 2531002151 | **734254** | 355 | 400 | ALB |
| 1.0 i 12V | | E | 999 | G4HC | M | | | 07/01 ▸ 06/04 | 2531002100 | **734255** | 355 | 400 | ALB |
| 1.0 i 12V | AC51G ; AB51G | E | 999 | G4HC | A | +/- | | 01/98 ▸ 07/98 | 2531002150 | **734254** | 355 | 400 | ALB |
| 1.0 i 12V | AC51G ; AB51G | E | 999 | G4HC | A | +/- | | 07/98 ▸ 06/01 | 2531002151 | **734254** | 355 | 400 | ALB |
| 1.0 i 12V | | E | 999 | G4HC | A | | | 07/01 ▸ 06/04 | 2531002100 | **734255** | 355 | 400 | ALB |
| 1.1 i 12V | | E | 1086 | G4H46-D4,G4H46/59 | M | | | 07/04 ▸ 03/06 | 2531005500 | •**735562** | 396 | 412 | ALB |
| 1.1 i 12V | | E | 1086 | G4H46-D4,G4H46/59 | A | | | 07/04 ▸ 03/06 | 2531005500 | •**735562** | 396 | 412 | ALB |

## ATOS PRIME

| | | | | | | | | | | | | | |
|---|---|---|---|---|---|---|---|---|---|---|---|---|---|
| 1.0 i 12V | MX5G1 | E | 999 | G4HC | M | +/- | | 12/99 ▸ 06/01 | 2531002100 | **734255** | 355 | 400 | ALB |
| 1.0 i 12V | MX1AO | E | 999 | G4HC | M | | | 07/01 ▸ 06/04 | 2531002100 | **734255** | 355 | 400 | ALB |
| 1.0 i 12V | MX5G1 | E | 999 | G4HC | A | +/- | | 12/99 ▸ 06/01 | 2531002151 | **734254** | 355 | 400 | ALB |
| 1.0 i 12V | | E | 999 | G4HC | A | | | 07/01 ▸ 06/04 | 2531002100 | **734255** | 355 | 400 | ALB |
| 1.1 i 12V | MX1AO | E | 1086 | G4H46/59 | M | | | 07/04 ▸ 03/08 | 2531005500 | •**735562** | 396 | 412 | ALB |
| 1.1 i 12V | MX1AO | E | 1086 | G4H46/59 | A | | | 07/04 ▸ 03/08 | 2531005500 | •**735562** | 396 | 412 | ALB |

## ATOZ

| | | | | | | | | | | | | | |
|---|---|---|---|---|---|---|---|---|---|---|---|---|---|
| 1.0 i 12V | AC51G ; AB51G | E | 999 | G4HC | M | | | 05/98 ▸ 06/01 | 2531002100 | **734255** | 355 | 400 | ALB |
| 1.0 i 12V | AC51G | E | 999 | G4HC | M | | | 05/98 ▸ 06/01 | 2531002151 | **734254** | 355 | 400 | ALB |
| 1.0 i 12V | AC51G ; AB51G | E | 999 | G4HC | A | | | 05/98 ▸ 06/01 | 2531002151 | **734254** | 355 | 400 | ALB |

## COUPE (95>2001)

| | | | | | | | | | | | | | |
|---|---|---|---|---|---|---|---|---|---|---|---|---|---|
| 1.6 i 16V | JG31R ; JK31R JG21R | E | 1599 | G4GRE6 | M | +/- | | 05/96 ▸ 12/01 | 2531029010 | **734950** | 375 | 669 | ALB |
| 1.6 i 16V | JG31R | E | 1599 | G4GRE6 | A | +/- | | 05/96 ▸ 09/96 | 2531029750 | **734258** | 377 | 670 | ALB |
| 2.0 i 16V | JK31F ; JK21F JG31F ; JG21F | E | 1975 | G4GF | M | +/- | | 05/96 ▸ 12/01 | 2531029010 | **734950** | 375 | 669 | ALB |
| 2.0 i 16V | JK31F ; JG31F | E | 1975 | G4GF | A | +/- | | 05/96 ▸ 09/96 | 2531029750 | **734258** | 377 | 670 | ALB |

## COUPE (2002>)

| | | | | | | | | | | | | | |
|---|---|---|---|---|---|---|---|---|---|---|---|---|---|
| 1.6 i 16V | GK | E | 1599 | G4GRE2 | M | | | 01/04 ▸ 12/06 | 253102D100 | **734903** | 375 | 648 | ALB |
| 2.0 i 16V | GKDK | E | 1975 | G4GCG-141 | M | | | 01/02 ▸ 02/03 | 253102D100 | **734903** | 375 | 648 | ALB |
| 2.0 i 16V | GK | E | 1975 | G4GCG-E4 | M | | | 04/03 ▸ 12/06 | 253102D110 | **734965** | 375 | 648 | ALB |
| 2.0 i 16V | GKDK ; GK | E | 1975 | G4GCG-141,G4GCG-E4 | A | | | 01/02 ▸ 12/06 | 253102D110 | **734965** | 375 | 648 | ALB |
| 2.7 i V6 24V | | E | 2657 | G6BA-G-167 | M | | | 01/04 ▸ 12/06 | 253102D110 | **734965** | 375 | 648 | ALB |
| 2.7 i V6 24V | | E | 2657 | G6BA-G-167 | A | | | 01/04 ▸ 12/06 | 253102D110 | **734965** | 375 | 648 | ALB |

## COUPÉ FL (2006>)

| | | | | | | | | | | | | | |
|---|---|---|---|---|---|---|---|---|---|---|---|---|---|
| 2.0 i 16V | | E | 1975 | 2.0L-BETA | M | +/- | | 09/06 ▸ 09/08 | 253102D110 | **734965** | 375 | 648 | ALB |
| 2.0 i 16V | | E | 1975 | 2.0L-BETA | A | +/- | | 09/06 ▸ 09/08 | 253102D100 | **734903** | 375 | 648 | ALB |

## ELANTRA (90>95)

| | | | | | | | | | | | | | |
|---|---|---|---|---|---|---|---|---|---|---|---|---|---|
| 1.5 | | E | 1468 | G4DJJA | M | | TSW | 12/90 ▸ 1993 | 2531028000 | **734256** | 375 | 669 | ALB |
| 1.5 | | E | 1468 | G4DJJA | M | | TSW | 1993 ▸ 05/95 | 2531028050 | **734256** | 375 | 669 | ALB |
| 1.6 16V | | E | 1596 | G4CR | M | | TSW | 10/93 ▸ 05/95 | 2531028050 | **734256** | 375 | 669 | ALB |
| 1.6 16V | | E | 1596 | G4CR | M | | TSW | 10/93 ▸ 1993 | 2531028000 | **734256** | 375 | 669 | ALB |
| 1.8 16V | | E | 1836 | G4CN | M | | TSW | 06/92 ▸ 1993 | 2531028000 | **734256** | 375 | 669 | ALB |
| 1.8 16V | | E | 1836 | G4CN | M | | TSW | 1993 ▸ 05/95 | 2531028050 | **734256** | 375 | 669 | ALB |

## ELANTRA (95>2000)

| | | | | | | | | | | | | | |
|---|---|---|---|---|---|---|---|---|---|---|---|---|---|
| 1.6 i | JW3RE ; JF3RE | E | 1599 | G4GR | M | +/- | | 05/95 ▸ 05/00 | 2531029010 | **734950** | 375 | 669 | ALB |
| 1.6 i | JF3RA | E | 1599 | G4GR | A | +/- | | 02/97 ▸ 05/00 | 2531029750 | **734258** | 377 | 670 | ALB |
| 1.6 i | JF3RA ; JW3RA | E | 1599 | G4GR | A | | | 05/95 ▸ 05/00 | 2531029700 | **734258** | 377 | 670 | ALB |
| 1.8 i | JF3ME ; JW3ME | E | 1796 | G4GM-128 | M | +/- | | 05/95 ▸ 05/00 | 2531029010 | **734950** | 375 | 669 | ALB |
| 1.8 i | JF3MA | E | 1796 | G4GM-128 | A | +/- | | 05/95 ▸ 02/97 | 2531029750 | **734258** | 377 | 670 | ALB |
| 1.8 i | JF3MA ; JW3MA | E | 1796 | G4GM-128 | A | | | 09/95 ▸ 05/00 | 2531029700 | **734258** | 377 | 670 | ALB |
| 2.0 i 16V | JF3FE ; JW3FE | E | 1975 | G4GF | M | +/- | | 03/97 ▸ 05/00 | 2531029010 | **734950** | 375 | 669 | ALB |
| 2.0 i 16V | JF3FA | E | 1975 | G4GF | A | +/- | | 08/98 ▸ 05/00 | 2531029750 | **734258** | 377 | 670 | ALB |
| 2.0 i 16V | JW3FA | E | 1975 | G4GF | A | | | 08/98 ▸ 05/00 | 2531029700 | **734258** | 377 | 670 | ALB |

## ELANTRA (2000>2007)

| | | | | | | | | | | | | | |
|---|---|---|---|---|---|---|---|---|---|---|---|---|---|
| 1.6 i | XDAUH ; XDBUH | E | 1599 | G4EDG | M | | | 06/00 ▸ 01/07 | 253102D100 | **734903** | 375 | 648 | ALB |

## EXCEL (89>94)

| | | | | | | | | | | | | | |
|---|---|---|---|---|---|---|---|---|---|---|---|---|---|
| 1.3,1.3 i | VD3ME ; VA3ME VF3ME | E | 1298 | G4DGJA,G4DGJE | M | +/- | | 08/89 ▸ 10/94 | 2531024100 | **734267** | 335 | 620 | CBS |
| 1.3,1.3 i | VF3ME ; VA3ME VD3ME | E | 1298 | G4DGJA,G4DGJE | M | +/- | | 08/89 ▸ 10/94 | 2531024002 | **734267** | 335 | 620 | CBS |

Radiator Radiateur Motorkühler Radiatore di raffreddamento Radiator Radyatör Radiator Радиатор vízhűtő Radiador Vodní chladič Radiator Ψυγείο



• **New** Nouveau **Nuevo** Novo **Nuovo** Nieuw **Neu** Nowość **Yeni** Новый Νέο **Nový**

# HYUNDAI (.../...)

| | Type Ctr. | | CC | | AC | | | OE | Valeo | DIM. | TECH |
|---|---|---|---|---|---|---|---|---|---|---|---|
| **EXCEL (89>94) (.../...)** | | | | | | | | | | | |
| 1.3,1.3 i | VD3ME ; VF3ME VA3ME | E | 1298 | G4DGJA,G4DGJE | M | + | | 08/89 ▸ 09/90 | 2531024000 | **734267** | 335 620 | CBS |
| 1.3,1.3 i | VA3ME ; VF3ME VD3ME | E | 1298 | G4DGJA,G4DGJE | M | + | | 09/90 ▸ 06/92 | 2531024001 | **734267** | 335 620 | CBS |
| 1.5,1.5 i | VD3JE ; VA3JE VF3JE | E | 1468 | G4DJJA,G4DJJE | M | +/- | | 08/89 ▸ 10/94 | 2531024100 | **734267** | 335 620 | CBS |
| 1.5,1.5 i | VD3JE ; VF3JE VA3JE | E | 1468 | G4DJJA,G4DJJE | M | +/- | | 08/89 ▸ 10/94 | 2531024002 | **734267** | 335 620 | CBS |
| 1.5,1.5 i | VD3JE ; VA3JE VF3JE | E | 1468 | G4DJJA,G4DJJE | M | + | | 08/89 ▸ 09/90 | 2531024000 | **734267** | 335 620 | CBS |
| 1.5,1.5 i | VF3JE ; VA3JE VD3JE | E | 1468 | G4DJJA,G4DJJE | M | + | | 09/90 ▸ 06/92 | 2531024001 | **734267** | 335 620 | CBS |
| **EXCEL (94>)** | | | | | | | | | | | |
| 1.3 | VF3LE ; VA3LE ; VD2LE ; VA2LE ; VD3LE | E | 1341 | G4EH62 | M | +/- | | 07/94 ▸ 05/96 | 2531022020 | | 450 516,6 | ALB |
| 1.3 | VA2LE ; VA3LE ; VD3LE ; VD2LE ; VF3LE | E | 1341 | G4EH62 | M | +/- | TSW 820336 | 05/96 ▸ 09/99 | 2531022025 | **732488** | 335 588 | CBS |
| 1.3 | VF3LA ; VA2LA ; VA3LA ; VD2LA | E | 1341 | G4EH62 | A | +/- | | 07/94 ▸ 05/96 | 2531022070 | | 375 535,8 | ALB |
| 1.3 | VD2LA ; VF3LA ; VA3LA ; VA2LA | E | 1341 | G4EH62 | A | +/- | | 05/96 ▸ 09/99 | 2531022250 | | 335 603 | ALB |
| 1.5 12V | VF3NE ; VA3NE VD3NE | E | 1495 | G4EK-88 | M | +/- | | 07/94 ▸ 05/96 | 2531022020 | | 450 516,6 | ALB |
| 1.5 12V | VD3NE ; VA3NE VF3NE | E | 1495 | G4EK-88 | M | +/- | TSW 820336 | 05/96 ▸ 09/99 | 2531022025 | **732488** | 335 588 | CBS |
| 1.5 12V | VF3NA ; VD3NA VA3NA | E | 1495 | G4EK-88 | A | +/- | | 07/94 ▸ 05/96 | 2531022070 | | 375 535,8 | ALB |
| 1.5 12V | VF3NA ; VD3NA VA3NA | E | 1495 | G4EK-88 | A | +/- | | 05/96 ▸ 09/99 | 2531022250 | | 335 603 | ALB |
| **GALLOPER** | | | | | | | | | | | |
| 2.5 TCi,2.5 TD,2.5 TDi | 901A ; 923A ; 900A | D | 2477 | D4BF-88,D4BH-100,D4BH-105 | M | | | 10/97 ▸ 06/02 | HR171511 | | | |
| **I30** | | | | | | | | | | | |
| 1.4 i 16V | FDB5P | E | 1396 | 1.4L-GAMMA | M | + | | 03/07 ▸ | 253102H010 | •**735564** | 455 600 | ALB |
| 1.4 i 16V | FDB5P | E | 1396 | 1.4L-GAMMA | M | + | | 03/07 ▸ | 253102H000 | •**735564** | 455 600 | ALB |
| 1.4 i 16V | | E | 1396 | 1.4L-GAMMA | M | | | 12/07 ▸ | 253102H010 | •**735564** | 455 600 | ALB |
| 1.6 CVVT 16V | | E | 1591 | 1.6L-GAMMA | M | + | | 12/07 ▸ | 253102H010 | •**735564** | 455 600 | ALB |
| 1.6 CVVT 16V | | E | 1591 | 1.6L-GAMMA | M | + | | 12/07 ▸ | 253102H000 | •**735564** | 455 600 | ALB |
| 2.0 CVVT 16V | | E | 1975 | 2.0L-BETA | M | + | | 12/07 ▸ | 253102H000 | •**735564** | 455 600 | ALB |
| **LANTRA (90>95)** | | | | | | | | | | | |
| 1.5 | JF3JE ; KF3JE ; JF2JE | E | 1468 | G4DJJA,G4DJJE | M | +/- | TSW | 12/90 ▸ 05/93 | 2531028000 | **734256** | 375 669 | ALB |
| 1.5 | JF3JE ; KF3JE ; JF2JE | E | 1468 | G4DJJA,G4DJJE | M | +/- | TSW | 05/93 ▸ 05/95 | 2531028050 | **734256** | 375 669 | ALB |
| 1.5 | JF3JA ; KF3JA ; JF2RA | E | 1468 | G4DJJA,G4DJJE | A | +/- | | 12/90 ▸ 05/93 | 2531028700 | | 376 668 | ALB |
| 1.5 | KF3JA ; JF3JA ; JF2RA | E | 1468 | G4DJJA,G4DJJE | A | +/- | | 05/93 ▸ 05/95 | 2531028252 | | 376 668 | ALB |
| 1.6 16V | JF2RE ; JF3RE KF3RE | E | 1596 | G4CR | M | +/- | TSW | 12/90 ▸ 05/93 | 2531028000 | **734256** | 375 669 | ALB |
| 1.6 16V | KF3RE ; JF3RE | E | 1596 | G4CR | M | +/- | TSW | 05/93 ▸ 05/95 | 2531028050 | **734256** | 375 669 | ALB |
| 1.6 16V | JF3RE | E | 1596 | G4CR | M | +/- | | 10/93 ▸ 05/95 | 2531028252 | | 376 668 | ALB |
| 1.6 16V | JF3RA ; KF3RA | E | 1596 | G4CR | A | +/- | | 12/90 ▸ 05/93 | 2531028700 | | 376 668 | ALB |
| 1.6 16V | KF3RA ; JF3RA | E | 1596 | G4CR | A | +/- | | 05/93 ▸ 05/95 | 2531028252 | | 376 668 | ALB |
| 1.8 16V | JF3ME ; KF3ME | E | 1836 | G4CN | M | +/- | TSW | 06/92 ▸ 05/93 | 2531028000 | **734256** | 375 669 | ALB |
| 1.8 16V | JF3ME ; KF3ME | E | 1836 | G4CN | M | +/- | TSW | 05/93 ▸ 05/95 | 2531028050 | **734256** | 375 669 | ALB |
| 1.8 16V | KF3MA ; JF3MA | E | 1836 | G4CN | A | +/- | | 06/92 ▸ 05/93 | 2531028700 | | 376 668 | ALB |
| 1.8 16V | JF3MA ; KF3MA | E | 1836 | G4CN | A | +/- | | 05/93 ▸ 05/95 | 2531028252 | | 376 668 | ALB |
| **LANTRA (95>)** | | | | | | | | | | | |
| 1.5 i 12V | JW2KE ; JF3KE JF2KE ; JW3KE | E | 1495 | G4EK-88 | M | +/- | | 09/96 ▸ 07/00 | 2531029010 | **734950** | 375 669 | ALB |
| 1.5 i 12V | JF3KA ; JF2KA | E | 1495 | G4EK-88 | A | +/- | | 02/97 ▸ 07/00 | 2531029750 | **734258** | 377 670 | ALB |
| 1.5 i 12V | JF2KA ; JF3KA | E | 1495 | G4EK-88 | A | | | 09/96 ▸ 02/97 | 2531029700 | **734258** | 377 670 | ALB |
| 1.6 i | JF2RE ; KF2RE ; JF3RE ; JW2RE ; KW2RE JW3RE ; KF3RE ; KW3RE | E | 1599 | G4GR | M | +/- | | 05/95 ▸ 07/00 | 2531029010 | **734950** | 375 669 | ALB |
| 1.6 i | JF2RA ; JF3RA ; KF3RA ; KF2RA | E | 1599 | G4GR | A | +/- | | 02/97 ▸ 07/00 | 2531029750 | **734258** | 377 670 | ALB |
| 1.6 i | JW3RA ; KW2RA ; KF2RA ; JF3RA ; JW2RA KW3RA ; KF3RA ; JF2RA | E | 1599 | G4GR | A | | | 05/95 ▸ 07/00 | 2531029700 | **734258** | 377 670 | ALB |
| 1.8 i | KF2MA ; KF3ME ; JF3ME ; JF2ME ; JW2ME JW3ME ; KW3ME | E | 1796 | G4GM-128 | M | +/- | | 05/95 ▸ 07/00 | 2531029010 | **734950** | 375 669 | ALB |
| 1.8 i | JF3MA ; JF2MA ; KF2ME ; KF3MA | E | 1796 | G4GM-128 | A | +/- | | 02/97 ▸ 07/00 | 2531029750 | **734258** | 377 670 | ALB |
| 1.8 i | JW3RA ; KF3MA ; JF2MA ; JF3MA ; KF2ME KW3RA | E | 1796 | G4GM-128 | A | | | 05/95 ▸ 07/00 | 2531029700 | **734258** | 377 670 | ALB |

| Type Ctr. | | CC | | AC | | | OE | Valeo | DIM. | TECH |
|---|---|---|---|---|---|---|---|---|---|---|
| **HYUNDAI** (.../...) | | | | | | | | | | |
| **LANTRA (95>) (.../...)** | | | | | | | | | | |
| 2.0 i 16V KF3FE ; KW3FE JF3FE ; JW3FE | E | 1975 | G4GF | M | +/- | | 06/97 ▸ 07/00 | 2531029010 | **734950** | 375 669 | ALB |
| 2.0 i 16V KF3FA ; JF3FA JW3FA ; KW3FA | E | 1975 | G4GF | A | +/- | | 06/97 ▸ 07/00 | 2531029750 | **734258** | 377 670 | ALB |
| **MATRIX** | | | | | | | | | | |
| 1.6 i FCWJ | E | 1599 | G4GD | A | +/- | | 05/01 ▸ 08/06 | 2531017100 | •**735606** | 614 360 | ALB |
| 1.8 i | E | 1796 | G4GB | A | +/- | | 05/01 ▸ 08/06 | 2531017100 | •**735606** | 614 360 | ALB |
| **PLAZA** | | | | | | | | | | |
| 2.5 TD WWH7 ; WT11H ; WWH7F | D | 2477 | D4BF-80,D4BH-100 | M | | | 01/98 ▸ | 253104A100 | **734408** | 650 439 | ALB |
| **PONY (89>94)** | | | | | | | | | | |
| 1.3,1.3 i VD3ME ; UD3ME UA2ME ; UD1ME ; VD1ME ; VF3ME ; UD2ME UD1MD ; VF2ME ; UF2MD ; UD2MD ; VD2MD VD1MD ; VD2ME ; VF2MD ; VA2ME ; UDFME | E | 1298 | G4DGJA,G4DGJE | M | +/- | | 08/89 ▸ 10/94 | 2531024100 | **734267** | 335 620 | CBS |
| 1.3,1.3 i UA2ME ; UD2MD VF2MD ; VD2MD ; VD1MD ; UD3ME ; UDFME UF2MD ; VF3ME ; VD2ME ; VA2ME ; VF2ME UD1MD ; VD3ME ; UD1ME ; VD1ME ; UD2ME | E | 1298 | G4DGJA,G4DGJE | M | +/- | | 08/89 ▸ 10/94 | 2531024002 | **734267** | 335 620 | CBS |
| 1.3,1.3 i VF3ME ; VF2MD VD1ME ; VD1MD ; VD3ME ; VF2ME ; VA2ME | E | 1298 | G4DGJA,G4DGJE | M | +/- | | 08/89 ▸ 06/92 | 2531024001 | **734267** | 335 620 | CBS |
| 1.3,1.3 i VF3ME ; UD2MD UF2MD ; UD1ME ; UD1MD ; VD1ME ; UD3ME VD2ME ; VD1MD ; VA2ME ; UDFME ; VF2ME VD2MD ; VF2MD ; UD2ME ; UA2ME ; VD3ME | E | 1298 | G4DGJA,G4DGJE | M | + | | 08/89 ▸ 09/90 | 2531024000 | **734267** | 335 620 | CBS |
| 1.5,1.5 i UD1JE ; UA3JE VD3JE ; UD1JD ; UF3JE ; VD1JD ; VD2JD VD2JE ; VF2JD ; VA3JE ; UD2JD ; VA2JD UD2JE ; VF3JE | E | 1468 | G4DJJA,G4DJJE | M | +/- | | 08/89 ▸ 10/94 | 2531024100 | **734267** | 335 620 | CBS |
| 1.5,1.5 i VD2JD ; UA3JE VF2JD ; UD1JD ; VF3JE ; VD1JD ; VA3JE UD1JE ; VD2JE ; UD2JD ; UF3JE ; UD2JE VD3JE ; VA2JD | E | 1468 | G4DJJA,G4DJJE | M | +/- | | 08/89 ▸ 10/94 | 2531024002 | **734267** | 335 620 | CBS |
| 1.5,1.5 i VD1JD ; VF3JE VA2JD ; VD3JE ; VA3JE ; VF2JD ; VD2JE | E | 1468 | G4DJJA,G4DJJE | M | +/- | | 08/89 ▸ 06/92 | 2531024001 | **734267** | 335 620 | CBS |
| 1.5,1.5 i VF2JD ; UD1JD UF3JE ; UD1JE ; VD1JD ; UD2JE ; VD3JE VA2JD ; VD2JE ; VA3JE ; VD2JD ; VF3JE UD2JD ; UA3JE | E | 1468 | G4DJJA,G4DJJE | M | + | | 08/89 ▸ 09/90 | 2531024000 | **734267** | 335 620 | CBS |
| **PONY (94>)** | | | | | | | | | | |
| 1.3 i VA3LE ; VF3LE ; VA2LE ; VD3LE ; VD2LE VF2LE | E | 1341 | G4EH62 | M | +/- | | 07/94 ▸ 05/96 | 2531022020 | | 450 516,6 | ALB |
| 1.3 i VA3LE ; VD3LE ; VF2LE ; VF3LE ; VD2LE VA2LE | E | 1341 | G4EH62 | M | +/- | TSW 820336 | 09/94 ▸ 12/99 | 2531022025 | **732488** | 335 588 | CBS |
| 1.5 i 12V VD2NE ; VA3NE | E | 1495 | G4EK-88 | M | +/- | | 09/94 ▸ 05/96 | 2531022020 | | 450 516,6 | ALB |
| 1.5 i 12V VD2NE ; VA3NE | E | 1495 | G4EK-88 | M | +/- | TSW 820336 | 05/96 ▸ 12/99 | 2531022025 | **732488** | 335 588 | CBS |
| 1.5 i 12V VA3NA | E | 1495 | G4EK-88 | A | +/- | | 01/96 ▸ 05/96 | 2531022070 | | 375 535,8 | ALB |
| 1.5 i 12V VA3NA | E | 1495 | G4EK-88 | A | +/- | | 05/96 ▸ 12/99 | 2531022250 | | 335 603 | ALB |
| **SANTA FÉ (2000>2006)** | | | | | | | | | | |
| 2.0 i 16V SMP1H | E | 1997 | G4JP | M | | | 08/00 ▸ 02/06 | 2531026000 | **734259** | 420 735 | ALB |
| 2.4 i 16V SMQ1H ; SMQ2H | E | 2351 | G4JS | M | | | 08/00 ▸ 02/06 | 2531026000 | **734259** | 420 735 | ALB |
| 2.7 i V6 24V SMS2K | E | 2657 | G6BA-G-173 | A | | | 08/00 ▸ 02/06 | 2531026070 | **734909** | 400 708 | ALB |
| 2.0 CRDi 145 16V U2NAC ; SMU2N<br>2.0 CRDi 16V SMV2G | D | 1991 | D4-EA,D4EA | M | +/- | | 03/03 ▸ 02/06 | 2531026410 | **734905** | 389 725 | ALB |
| **SATELLITE** | | | | | | | | | | |
| 2.4 i WWH7S | E | 2351 | G4CSS | M | | | 01/98 ▸ 12/07 | 253104A000 | **734408** | 650 439 | ALB |
| 2.5 TD WWH7F ; WT11H | D | 2477 | D4BF-80,D4BH-100 | M | | | 03/98 ▸ 12/07 | 253104A100 | **734408** | 650 439 | ALB |
| **SONATA (93>98)** | | | | | | | | | | |
| 1.8 DF3DE ; DF2DE ; CF2DE ; CF3DE | E | 1796 | G4CM | M | +/- | | 07/93 ▸ 07/98 | 2531034000 | **732487** | 400 679,8 | ALB |
| 1.8 DF3DA ; CF2DA ; DF2DA ; CF3DA | E | 1796 | G4CM | A | +/- | TSW | 07/93 ▸ 07/98 | 2531034050 | **734261** | 400 675 | ALB |
| 2.0,2.0 16V CF2FE ; CF3FE DF2FE ; DF3FE | E | 1997 | G4CP,G4CPD | M | +/- | | 07/93 ▸ 07/98 | 2531034000 | **732487** | 400 679,8 | ALB |
| 2.0 | E | 1997 | G4CP-D | M | | | 11/94 ▸ 04/98 | 2531034000 | **732487** | 400 679,8 | ALB |

Radiator Radiateur Motorkühler Radiatore di raffreddamento Radiator Radyatör Radiator Radiador Радиатор vízhűtő Vodní chladič Radiator Ψυγείο



• **New** Nouveau **Nuevo** Novo **Nuovo** Nieuw **Neu** Nowość **Yeni** Новый Νέο **Nový**

| Type Ctr. | | CC | | AC | | | OE | Valeo | DIM. | TECH |
|---|---|---|---|---|---|---|---|---|---|---|
| **HYUNDAI (.../...)** | | | | | | | | | | |
| **SONATA (93>98) (.../...)** | | | | | | | | | | |
| 2.0,2.0 16V DF2FA ; DF3FA CF3FA ; CF2FA | E | 1997 | G4CP,G4CPD | A | +/- | TSW | 07/93 ▸ 07/98 | 2531034050 | **734261** | 400 675 ALB |
| 2.0 | E | 1997 | G4CP-D | A | | TSW | 09/94 ▸ 04/98 | 2531034050 | **734261** | 400 675 ALB |
| 3.0 DF3TA ; CF3TA | E | 2972 | G6AT | A | +/- | TSW | 07/93 ▸ 07/98 | 2531034050 | **734261** | 400 675 ALB |
| **SONATA (98>2001)** | | | | | | | | | | |
| 2.0 i 16V EN41B ; EM41B | E | 1997 | G4JP | M | +/- | | 08/98 ▸ 06/01 | 2531038001 | | |
| 2.0 i 16V EN41B ; EM41B | E | 1997 | G4JP | A | +/- | | 08/98 ▸ 06/01 | 2531038050 | **734949** | 345 699 ALB |
| 2.4 i EN41D | E | 2351 | G4DS | M | +/- | | 10/98 ▸ 06/01 | 2531038001 | | |
| 2.4 i EN41D | E | 2351 | G4DS | A | +/- | | 10/98 ▸ 06/01 | 2531038050 | **734949** | 345 699 ALB |
| 2.5 i V6 24V EN41E | E | 2493 | G6AV | M | +/- | | 09/98 ▸ 06/01 | 2531038001 | | |
| 2.5 i V6 24V EN41E | E | 2493 | G6AV | A | +/- | | 08/98 ▸ 06/01 | 2531038050 | **734949** | 345 699 ALB |
| **SONICA** | | | | | | | | | | |
| 2.0 i 16V EN41B | E | 1997 | G4JP | M | +/- | | 09/98 ▸ 06/01 | 2531038001 | | |
| 2.0 i 16V EN41B | E | 1997 | G4JP | A | +/- | | 09/98 ▸ 06/01 | 2531038050 | **734949** | 345 699 ALB |
| 2.5 i 24V EN41E | E | 2493 | G6AV | M | +/- | | 09/98 ▸ 06/01 | 2531038001 | | |
| 2.5 i 24V EN41E | E | 2493 | G6AV | A | +/- | | 09/98 ▸ 06/01 | 2531038050 | **734949** | 345 699 ALB |
| **STAREX** | | | | | | | | | | |
| 2.4 i WWH7S | E | 2351 | G4CSS | M | | | 01/98 ▸ 12/07 | 253104A000 | **734408** | 650 439 ALB |
| 2.5 TD WWH7F ; WT11H | D | 2477 | D4B,D4BF-80 | M | | | 01/98 ▸ 12/07 | 253104A100 | **734408** | 650 439 ALB |
| **TIBURON** | | | | | | | | | | |
| 2.0 i 16V GKDK | E | 1975 | G4GF | M | | | 01/02 ▸ 12/06 | 253102D100 | **734903** | 375 648 ALB |
| 2.0 i 16V GKDK | E | 1975 | G4GF | A | | | 01/02 ▸ 12/06 | 253102D110 | **734965** | 375 648 ALB |
| **XG (99>2002)** | | | | | | | | | | |
| 2.5 i V6 24V XG | E | 2493 | G6BV | M | + | | 01/99 ▸ 08/02 | 2531038001 | | |
| 2.5 i V6 24V XG | E | 2493 | G6BV | A | + | | 01/99 ▸ 08/02 | 2531038050 | **734949** | 345 699 ALB |
| **HYUNDAI** | | | | | | | | | | |
| **H1 (97>2002)** | | | | | | | | | | |
| 2.4 i WWH7S | E | 2351 | G4CSS | M | +/- | | 05/98 ▸ 02/00 | 253104A000 | **734408** | 650 439 ALB |
| **H1** | | | | | | | | | | |
| 2.5 TD WWH7F | D | 2477 | D4BH-FIE,D4BH-FIM | M | +/- | | 10/97 ▸ | 253104A100 | **734408** | 650 439 ALB |
| **H1 MINI BUS (2001>2006)** | | | | | | | | | | |
| 2.4 i 140 16V | E | 2351 | 2.4L-SIRIUS 2 | M | | | 03/02 ▸ 01/05 | 253104A100 | **734408** | 650 439 ALB |
| 2.5 TD 100 | D | 2477 | D4BH-FIM | M | | | 07/01 ▸ 01/05 | 253104A100 | **734408** | 650 439 ALB |
| 2.5 TD 100 | D | 2477 | D4BH-FIM | A | | | 07/01 ▸ 01/05 | 253104A100 | **734408** | 650 439 ALB |
| **INNOCENTI** | | | | | | | | | | |
| **ELBA** | | | | | | | | | | |
| 1.3 146CW | E | 1301 | 146A5.000 | M | - | TSW | 04/91 ▸ 12/92 | 7652127 | **730990** | 441 322 ALM |
| 1.4 ie 146EN ▸ 9778379 | E | 1372 | 146C5.000 | M | - | TSW | 10/93 ▸ | 7685063 | **730991** | 520 322 ALM |
| 1.5 ie 146C9 | E | 1498 | 149C1.000 | M | - | TSW | 04/92 ▸ 11/94 | 7685063 | **730991** | 520 322 ALM |
| 1.6 ie 146E0 ▸ 5276471 | E | 1591 | 146C6.000 | M | - | TSW | 10/93 ▸ | 7685063 | **730991** | 520 322 ALM |
| 1.7 D 146DI ; 146E1 | D | 1697 | 146B2.000 | M | - | TSW | > ▸ 1997 | 50005580 | **811387** | 519 307 ALB |
| **MILLE** | | | | | | | | | | |
| 1.0 ie 146FP | E | 994 | 146C7.000 | M | - | TSW | 05/94 ▸ 12/97 | 7652127 | **730990** | 441 322 ALM |
| 1.4 ie 146EQ | E | 1372 | 146D5.000 | M | | TSW | 07/95 ▸ 12/97 | 7685063 | **730991** | 520 322 ALM |
| 1.7 D 146EI | D | 1697 | 146B2.000 | M | - | TSW | 05/95 ▸ 12/97 | 50005580 | **811387** | 519 307 ALB |
| **MINI** | | | | | | | | | | |
| 1000 B531 | E | 998 | 99H | M | - | | 10/74 ▸ 10/82 | 53401106 | | 445 187,2 CBS |
| 1300 B541 ; B541C | E | 1275 | 12H | M | - | | 10/74 ▸ 12/84 | 53401106 | | 445 187,2 CBS |
| **IVECO** | | | | | | | | | | |
| **DAILY (78>89)** | | | | | | | | | | |
| 2.4 D 1005 ; 9005 ; 1003 ; 1001 ▸ 311579, 421478 | D | 2445 | 8140.61 | M | | | 01/78 ▸ 12/89 | 93807802 | **883787** | 643 451 ALM |

| Type Ctr. | | CC | | AC | | 2+3 | OE | Valeo | DIM. | TECH |
|---|---|---|---|---|---|---|---|---|---|---|
| **IVECO (.../...)** | | | | | | | | | | |
| **DAILY (78>89) (.../...)** | | | | | | | | | | |
| 2.4 TD 1031 ; 1035 | D | 2445 | 8140.21 | M | | 01/85 ▸ 12/89 | 93807662 | **811348** | 643 451 | ALM |
| 2.4 D,2.4 TD | D | 2445 | 8140.21,8140.61 | M | | 07/86 ▸ 12/89 | 93808688 | **816646** | 653 451 | ALM |
| 2.4 D 9005 ; 1001 ; 1005 ▸ 311578 | D | 2445 | 8140.61 | M | | 1978 ▸ | 93807442 | **883787** | 643 451 | ALM |
| 2.5 TD 1261 | D | 2499 | 8140.27 | M | | 1985 ▸ 12/89 | 93808688 | **816646** | 653 451 | ALM |
| **DAILY (89>96)** | | | | | | | | | | |
| 2.5 TD 1301 ; 1311 ; 1313 1297 ; 1381 ; 1385 ▸ 2074006 | D | 2499 | 8140.27S,8140.47,8140.47R 8140.97 | M | | 04/96 ▸ 03/96 | 93813747 | **730334** | 625 382 | CBS |
| 2.5 D,2.5 TD 1301 ; 1321 ; 1305 1303 ; 1293 ; 1295 ; 1291 | D | 2499 | 8140.07,8140.27S | M | | 1989 ▸ 03/96 | 1907918 | **816647** | 638 451 | ALM |
| 2.5 TD 1311 ; 1297 ; 1313 1381 ; 1301 ; 1385 | D | 2499 | 8140.27S,8140.47,8140.47R 8140.97 | M | | 03/89 ▸ 03/96 | 93822906 | **816649** | 643 452 | ALM |
| **DAILY (96>99)** | | | | | | | | | | |
| 2.5 D 1493 ; 1491 ; 1593 | D | 2499 | 8140-67F | M | | 04/96 ▸ 05/99 | 93824070 | **731572** | 641 488 | ALM |
| 2.5 D 1491 ; 1493 ; 1593 | D | 2499 | 8140-67F | M | | 04/96 ▸ 05/99 | 93825378 | **731572** | 641 488 | ALM |
| 2.8 TD 1505 ; 1573 ; 1503 1501 ; 1575 ; 1563 | D | 2798 | 8140-23 | M | | 04/96 ▸ 05/99 | 93824070 | **731572** | 641 488 | ALM |
| 2.8 TD 1573 ; 1505 ; 1503 1501 ; 1563 ; 1575 | D | 2798 | 8140-23 | M | | 04/96 ▸ 05/99 | 93825378 | **731572** | 641 488 | ALM |
| 2.8 TD 1521 | D | 2798 | 8140-23 | M | | 04/96 ▸ 05/99 | 1907918 | **816647** | 638 451 | ALM |
| **DAILY (99>)** | | | | | | | | | | |
| 2.3 TD AHJA ; AGJB ; ALJA AEJB ; ANJA ; AMJA | D | 2287 | F1AE0481A | M | | 06/02 ▸ 04/06 | 504045487 | **734449** | 645 470 | ALB |
| 2.3 TD AEKB ; AHKA ; AMKA AGKB ; ANKA ; ALKA | D | 2287 | F1AE0481B | M | | 06/02 ▸ 04/06 | 504045489 | **734448** | 649 440 | ALB |
| 2.8 TD A3CB ; A7BB | D | 2798 | 8140-43S | M | + | 05/99 ▸ 04/06 | 500396428 | **734230** | | |
| 2.8 D,2.8 TD A2AA ; A1H6 ; A2CA A3CB ; A5FA ; A6FA ; A5CA ; A4DB ; A1HA A3FB ; A6CA ; A3BB ; A5HA ; A1CA ; A5BA A2FA ; A7BB ; A6AA ; A6BA ; A7FB ; A5GA A1FA ; A2HB ; A3HB ; A1BA ; A7HB ; A6AB A2BA ; A6HB ; A6GA ; AHB1 ; A8HB | D | 2798 | 8140-43B,8140-43C,8140-43N 8140-43S,8140-63 | M | | 05/99 ▸ 04/06 | 500396429 | **734230** | | |
| 2.8 TD A3BB ; A1BA ; A5BA A7BB ; A1FA ; A3FB ; A7FB ; A5FA | D | 2798 | 8140-43B,8140-43C | M | | 05/99 ▸ 04/06 | 99488591 | **734231** | 645 470 | |
| 2.8 D A2AA ; A6AA ; A5AA ; A1AA ▸ 504008110 | D | 2798 | 8140-63 | M | | 05/99 ▸ 04/06 | 504008110 | **734231** | 645 470 | |
| 2.8 D A5AA ; A1AA | D | 2798 | 8140-63 | M | | 05/99 ▸ | 500396428 | **734230** | | |
| **JAGUAR** | | | | | | | | | | |
| **X-TYPE (2001>2008)** | | | | | | | | | | |
| 2.5 i V6 24V ▸ C25927 | E | 2495 | AJ-V6-2.5 | M | | 02/01 ▸ | C2S1231 | **734785** | 620 433 | ALB |
| 2.5 i V6 24V ▸ C25927 | E | 2495 | AJ-V6-2.5 | A | | 02/01 ▸ | C2S1231 | **734785** | 620 433 | ALB |
| 3.0 i V6 24V ▸ C25927 | E | 2967 | AJ-V6-3.0 | M | | 02/01 ▸ | C2S1231 | **734785** | 620 433 | ALB |
| 3.0 i V6 24V | E | 2967 | AJ-V6-3.0 | A | | 02/01 ▸ | C2S1231 | **734785** | 620 433 | ALB |
| **JEEP** | | | | | | | | | | |
| **CHEROKEE (77>2001)** | | | | | | | | | | |
| 2.5 i | E | 2464 | EPE | M | | 01/93 ▸ 10/99 | 52028115 | **732552** | 790 266 | ALB |
| 2.5 i | E | 2464 | EPE | M | | 01/95 ▸ 10/99 | 52029046 | **732552** | 790 266 | ALB |
| 4.0 i | E | 3956 | ERH-177 | M | +/- | 01/95 ▸ 10/99 | 52079597AB | **732782** | 565 503 | CBS |
| 4.0 i | E | 3956 | ERH-177 | M | | 01/95 ▸ 12/97 | 52028379 | **732713** | 565 503 | ALB |
| 4.0 i | E | 3956 | ERH-177 | M | | 01/95 ▸ 10/99 | 52004921 | | 787 282 | ALB |
| 4.0 i | E | 3956 | ERH-177 | A | +/- | 01/95 ▸ 10/99 | 52079597AB | **732782** | 565 503 | CBS |
| 4.0 i | E | 3956 | ERH-177 | A | | 01/95 ▸ 12/97 | 52028379 | **732713** | 565 503 | ALB |
| 4.0 i | E | 3956 | ERH-177 | A | | 01/99 ▸ 10/99 | 52004921 | | 787 282 | ALB |
| 4.0 i | E | 3964 | ERH-184 | M | +/- | 01/88 ▸ 12/90 | 52003157 | | 787 282 | |
| 4.0 i | E | 3964 | ERH-184 | M | +/- | 01/88 ▸ 10/99 | 52003156 | | 787 282 | |
| 4.0 i | E | 3964 | ERH-173,ERH-184 | M | +/- | 01/98 ▸ 2001 | 52079597AB | **732782** | 565 503 | CBS |
| 4.0 i | E | 3964 | ERH-184 | M | + | 01/92 ▸ 12/93 | 52028133 | **732552** | 790 266 | ALB |

Radiator Ψυγείο Vodní chladič Радиатор vízhűtő Radiador Radiator Radyatör Radiator Radiatore di raffreddamento Motorkühler Radiateur Radiator



• **New** Nouveau **Nuevo** Novo **Nuovo** Nieuw **Neu** Nowość **Yeni** Новый Νέο **Novy**

| Type Ctr. | | CC | | AC | | | OE | Valeo | DIM. | TECH |
|---|---|---|---|---|---|---|---|---|---|---|
| **JEEP (.../...)** | | | | | | | | | | |
| **CHEROKEE (77>2001) (.../...)** | | | | | | | | | | |
| 4.0 i | E | 3964 | ERH-184 | M | | | 01/93 ▸ 10/99 | 52028115 | **732552** | 790 266 | ALB |
| 4.0 i | E | 3964 | ERH-184 | M | | | 12/93 ▸ 12/97 | 52030000 | **732552** | 790 266 | ALB |
| 4.0 i | E | 3964 | ERH-173,ERH-184 | M | + | | 01/98 ▸ 2001 | 52004921 | | 787 282 | ALB |
| 4.0 i | E | 3964 | ERH-184 | A | +/- | | 01/88 ▸ 10/99 | 52003156 | | 787 282 | |
| 4.0 i | E | 3964 | ERH-184 | A | +/- | | 01/88 ▸ 12/90 | 52003157 | | 787 282 | |
| 4.0 i | E | 3964 | ERH-173,ERH-184 | A | +/- | | 01/98 ▸ 2001 | 52079597AB | **732782** | 565 503 | CBS |
| 4.0 i | E | 3964 | ERH-184 | A | + | | 01/92 ▸ 12/93 | 52028133 | **732552** | 790 266 | ALB |
| 4.0 i | E | 3964 | ERH-184 | A | | | 01/93 ▸ 10/99 | 52030000 | **732552** | 790 266 | ALB |
| 4.0 i | E | 3964 | ERH-173,ERH-184 | A | | | 01/98 ▸ 2001 | 52004921 | | 787 282 | ALB |
| 2.1 TD 88 | D | 2068 | ENA | M | + | | 01/93 ▸ 12/94 | 52028117 | | 425 508 | CBS |
| 2.1 TD 88 | D | 2068 | ENA | M | | | 1977 ▸ 1986 | 52003544 | | 787 282 | ALB |
| 2.5 TD 116 | D | 2499 | ENC | M | +/- | | 10/95 ▸ 09/01 | 52029100 | **732312** | 787 282 | ALB |
| 2.5 TD 116 | D | 2499 | ENC | M | | | 10/95 ▸ 09/01 | 52029100 | **732312** | 787 282 | ALB |
| **CHEROKEE (2001>2004)** | | | | | | | | | | |
| 2.4 i 16V | E | 2429 | ED1 | M | + | | 01/01 ▸ 09/03 | 52080123AA | **735222** | 507 507 | ALB |
| 2.4 i 16V | E | 2429 | ED1 | A | + | | 01/01 ▸ 09/03 | 52080123AA | **735222** | 507 507 | ALB |
| 3.7 i V6 | E | 3700 | EKG-211 | A | + | | 01/01 ▸ 10/04 | 52080118AA | •**735351** | 507 507 | ALB |
| **CHEROKEE (2004>)** | | | | | | | | | | |
| 3.7 i V6 | E | 3700 | EKG-204 | A | + | | 11/04 ▸ 04/06 | 52079729AC | **735221** | 507 507 | ALB |
| **GRAND CHEROKEE (93>2000)** | | | | | | | | | | |
| 4.0 i | E | 3964 | ERH | A | + | | 01/98 ▸ 07/00 | 52079597AB | **732782** | 565 503 | CBS |
| 4.0 i | E | 3964 | ERH | A | | | 01/93 ▸ 07/00 | 52028115 | **732552** | 790 266 | ALB |
| 4.0 i | E | 3964 | ERH | A | | | 01/93 ▸ 12/97 | 52028379 | **732713** | 565 503 | ALB |
| 4.0 i | E | 3964 | ERH | A | | | 01/93 ▸ 07/00 | 52004921 | | 787 282 | ALB |
| 5.2 i | E | 5210 | ELF | A | | | 01/93 ▸ 07/00 | 52006644 | | 571 503 | |
| 3.1 D | D | 3124 | EXA | A | + | | 11/98 ▸ 07/00 | 52079498AB | | | |
| **GRAND CHEROKEE (2003>2005)** | | | | | | | | | | |
| 4.0 i | E | 3956 | ERH | A | + | | 09/02 ▸ 05/05 | 52079428AB | | | |
| 4.7 i V8 | E | 4701 | EVA,EVC | A | + | | 09/02 ▸ 05/05 | 52079883AB | **735051** | 500 538 | ALB |
| **WRANGLER (96>2006)** | | | | | | | | | | |
| 2.4 i Power Tech I-4 | E | 2429 | ED | A | +/- | | 11/02 ▸ 08/06 | 55037653AB | | | |
| 4.0 i | E | 3956 | ERH-177 | M | +/- | | 08/03 ▸ 08/06 | 55037654AB | **735196** | 458 492 | ALB |
| 4.0 i | E | 3956 | ERH-177 | A | +/- | | 08/03 ▸ 08/06 | 55037653AB | | | |
| 4.0 i | E | 3956 | ERH-177 | A | +/- | | 08/03 ▸ 08/06 | 55037654AB | **735196** | 458 492 | ALB |
| **KIA** | | | | | | | | | | |
| **AVELLA** | | | | | | | | | | |
| 1.3 i 16V | E | 1324 | B3-EGI | M | | | 12/98 ▸ 12/98 | KK37015200A | **735076** | 350 526 | ALB |
| 1.5 i 16V | E | 1498 | B5-16V | M | | | 12/98 ▸ 12/98 | KK37015200A | **735076** | 350 526 | ALB |
| **MAGENTIS (2001>2005)** | | | | | | | | | | |
| 2.0 i 16V FSFGS65 | E | 1997 | G4JP | M | | | 02/01 ▸ 12/05 | 2531038001 | | | |
| 2.0 i 16V FSFGS6B | E | 1997 | G4JP | A | | | 02/01 ▸ 12/05 | 2531038050 | **734949** | 345 699 | ALB |
| 2.0 i 16V FSFGS6B | E | 1997 | G4JP | A | | | 02/01 ▸ 12/05 | 253103C050 | | 400 718,2 | ALB |
| 2.5 i V6 24V FSFGV65 | E | 2493 | G6BV | M | | | 02/01 ▸ 12/05 | 2531038001 | | | |
| 2.5 i V6 24V FSFGV6B | E | 2493 | G6BV | A | | | 02/01 ▸ 12/05 | 253103C050 | | 400 718,2 | ALB |
| 2.5 i V6 24V FSFGV6B | E | 2493 | G6BV | A | | | 02/01 ▸ 12/05 | 2531038050 | **734949** | 345 699 | ALB |
| **MENTOR** | | | | | | | | | | |
| 1.6 i FA2252 | E | 1598 | B6 | M | | | 05/94 ▸ 01/97 | 0K20115200B | **734264** | 376 647 | ALB |
| **PRIDE** | | | | | | | | | | |
| 1.1 DA2311 | E | 1139 | B1 | M | | | 10/87 ▸ 09/94 | KK15015200A | **735079** | 320 378 | ALB |
| 1.3,1.3 i K11E ; DA2322 DA23 ; DA2422 ; K11H ; K11G ; K11C | E | 1324 | B3,B3-EGI | M | | | 10/87 ▸ 07/00 | KK15015200A | **735079** | 320 378 | ALB |
| 1.3 i K11H ; K11E | E | 1324 | B3-EGI | M | | | 10/94 ▸ 07/00 | KK13915200 | **735079** | 320 378 | ALB |
| 1.3 i K11G ; K11E ; K11C ; K11H | E | 1324 | B3-EGI | M | | | 10/94 ▸ 07/00 | KK33115200 | **734262** | 320 378 | ALB |
| 1.3 i K11F ; K11D | E | 1324 | B3-EGI | A | | | 10/94 ▸ 07/00 | KK15015200A | **735079** | 320 378 | ALB |
| **PRIDE WAGON** | | | | | | | | | | |
| 1.3 i K14G | E | 1324 | B3-EGI | M | | | 08/98 ▸ 07/00 | KK33115200 | **734262** | 320 378 | ALB |
| **RETONA** | | | | | | | | | | |
| 2.0 i 16V FK5DS66 ; FKTDS66 | E | 1998 | FE-DI | M | | | 09/99 ▸ 05/00 | 0K01215200 | **734788** | 450 516,8 | ALB |

| Type Ctr. | | CC | | AC | | | OE | Valeo | DIM. | TECH |
|---|---|---|---|---|---|---|---|---|---|---|
| **KIA (.../...)** | | | | | | | | | | |
| **RETONA (.../...)** | | | | | | | | | | |
| 2.0 TCi FK5DS8C | D | 1998 | RF-TCI | A | | | 09/99 ▸ 05/00 | AA34B15200 | | 450 517 | ALB |
| **RIO (2000>2005)** | | | | | | | | | | |
| 1.3 i FDADL35 ; FDFDL35 | E | 1343 | MI-TECH-SOH | M | | | 07/00 ▸ 05/05 | 0K30C15200B | **734263** | 350 647 | |
| 1.3 i FDADL35 ; FDFDL35 | E | 1343 | MI-TECH-SOH | M | | | 07/00 ▸ 07/01 | 0K30A15200D | **735077** | 350 526 | ALB |
| 1.3 i FDADL35 ; FDFDL35 | E | 1343 | MI-TECH-SOH | M | | | 07/01 ▸ 07/02 | 0K31A15200A | **735078** | 350 347 | ALB |
| 1.3 i FDADL35 ; FDFDL35 | E | 1343 | MI-TECH-SOH | M | | | 07/01 ▸ 07/02 | 0K30A15200E | **735077** | 350 526 | ALB |
| 1.3 i FDADL3B ; FDFDL3B | E | 1343 | MI-TECH-SOH | A | | | 07/00 ▸ 07/02 | 0K31F15200E | | 350 647 | ALB |
| 1.3 i FDFDL3B ; FDADL3B | E | 1343 | MI-TECH-SOH | A | | | 07/00 ▸ 05/05 | 0K31H15200C | | 350 647 | ALB |
| 1.5 i 16V FDFDP65 ; FDADP65 | E | 1493 | MI-TECH-DOH | M | | | 07/00 ▸ 05/05 | 0K30C15200B | **734263** | 350 647 | |
| 1.5 i 16V FDFDP65 ; DC2432 FDADP65 | E | 1493 | MI-TECH-DOH | M | | | 07/00 ▸ 05/05 | 0K30A15200D | **735077** | 350 526 | ALB |
| 1.5 i 16V FDFDP65 ; FDADP65 | E | 1493 | MI-TECH-DOH | M | | | 07/01 ▸ 07/02 | 0K31A15200A | **735078** | 350 347 | ALB |
| 1.5 i 16V FDFDP65 ; FDADP65 | E | 1493 | MI-TECH-DOH | M | | | 07/01 ▸ 07/02 | 0K30A15200E | **735077** | 350 526 | ALB |
| 1.5 i 16V FDFDP6B ; FDADP6B | E | 1493 | MI-TECH-DOH | A | | | 07/00 ▸ 05/05 | 0K31H15200C | | 350 647 | ALB |
| 1.5 i 16V FDADP6B ; FDFDP6B | E | 1493 | MI-TECH-DOH | A | | | 07/00 ▸ 07/02 | 0K31F15200E | | 350 647 | ALB |
| **SEPHIA** | | | | | | | | | | |
| 1.6 i FA ; FA2252 ; K24J ; K24K | E | 1598 | B6 | M | | | 01/93 ▸ 08/98 | 0K20115200B | **734264** | 376 647 | ALB |
| **SEPHIA II** | | | | | | | | | | |
| 1.5 i | E | 1498 | B5-16V | A | | | 09/98 ▸ 05/01 | 0K2A215200B | **734265** | 345 700 | ALB |
| **SHUMA** | | | | | | | | | | |
| 1.5 i K2AD | E | 1498 | B5-16V | A | | | 09/98 ▸ 09/02 | 0K2A215200B | **734265** | 345 700 | ALB |
| **SPORTAGE** | | | | | | | | | | |
| 2.0 i 16V | E | 1975 | G4GC | M | | | 12/04 ▸ 12/06 | 0K03815200 | | 450 516,8 | ALB |
| 2.0 i 16V | E | 1975 | G4GC | A | | | 12/04 ▸ 12/06 | 0K03815200 | | 450 516,8 | ALB |
| 2.0 i,2.0 i 16V K00E ; K01W ; K40A K200L ; K200F | E | 1998 | FE,FE-DI | M | | | 07/93 ▸ 09/02 | 0K01215200 | **734788** | 450 516,8 | ALB |
| 2.0 i 16V FMVDS66 ; FMWDS66 FMYDS66 ; FMXDS66 | E | 1998 | FE-DI,FED | M | | | 10/00 ▸ 09/02 | 0K03815200 | | 450 516,8 | ALB |
| 2.0 i 16V K01X | E | 1998 | FE-DI | A | | | 06/95 ▸ 09/02 | 0K02215200 | | 450 516,8 | ALB |
| 2.0 i 16V FMXDS6C ; FMVDS6C FMWDS6C ; FMYDS6B | E | 1998 | FE-DI | A | | | 10/00 ▸ 09/02 | 0K03815200 | | 450 516,8 | ALB |
| 2.0 CRDi FQWDS85 ; FQWDS86 | D | 1991 | D4EA | M | | | 12/04 ▸ 12/06 | 0K04R15200 | | | |
| 2.0 CRDi FQWDS8C | D | 1991 | D4EA | A | | | 12/04 ▸ 12/06 | 0K04R15200 | | | |
| 2.0 TD FMXDS86 ; K00M FMVDS86 ; FMYDS86 ; FMWDS86 | D | 1998 | RF,RF-TCI | M | | | 06/96 ▸ 09/02 | 0K04R15200 | | | |
| 2.0 TD FMWDS8C ; K00N | D | 1998 | RF,RF-TCI | A | | | 06/96 ▸ 09/02 | 0K04R15200 | | | |
| 2.2 D K037 | D | 2184 | HW | M | | | 07/93 ▸ 09/02 | 0K04R15200 | | | |
| **SPORTAGE (2007>2010)** | | | | | | | | | | |
| 2.0 i 16V | E | 1975 | G4GC | M | +/- | | 05/07 ▸ 05/10 | 253102E100 | •**735563** | 456 641 | ALB |
| **KIA** | | | | | | | | | | |
| **BONGO** | | | | | | | | | | |
| 2.7 D K76 | D | 2665 | J2 | M | | | 08/98 ▸ 2003 | 0K62Z15200C | **734990** | 400 535,8 | ALB |
| 2.7 D K76 | D | 2665 | J2 | M | | | 08/98 ▸ 2004 | 0K62Z15200B | **734990** | 400 535,8 | ALB |
| **K2700** | | | | | | | | | | |
| 2.7 D | D | 2665 | J2 | M | | | 07/97 ▸ 09/04 | 0K60A15200C | **734990** | 400 535,8 | ALB |
| **PREGIO** | | | | | | | | | | |
| 2.7 D K76B ; K76C | D | 2665 | J2 | M | | | 11/95 ▸ 09/04 | 0K72A15200 | **734953** | 375 535,8 | ALB |
| **LADA** | | | | | | | | | | |
| **NATACHA** | | | | | | | | | | |
| 1.1 21081 | E | 1099 | VAZ21081K | M | - | TSW | 05/93 ▸ 1997 | 21081301012 | **730317** | 480 341 | ALM |
| 1.5 21083 | E | 1499 | VAZ21083K | M | - | TSW | 05/93 ▸ 1997 | 21081301012 | **730317** | 480 341 | ALM |
| **NIVA** | | | | | | | | | | |
| 1.6 21210 ; 2121 | E | 1568 | VAZ2121 | M | - | | 03/76 ▸ 1995 | 21211301010 | | 650 326 | CBS |

Radiator Radiateur Motorkühler Radiatore di raffreddamento Radiator Radyatör Radiador Радиатор vízhűtő Vodní chladič Radiator Ψυγείο



• **New** Nouveau **Nuevo** Novo **Nuovo** Nieuw **Neu** Nowość **Yeni** Новый Νέο **Novy**

| Type | Ctr. | | CC | | AC | | | OE | Valeo | DIM. | TECH |
|---|---|---|---|---|---|---|---|---|---|---|---|
| **LADA (.../...)** | | | | | | | | | | | |
| **NIVA (.../...)** | | | | | | | | | | | |
| 1.9 D | 21213 ; 21215 | D | 1905 | XUD9L | M | - | TSW | 07/93 ▸ | 212151301012 | **730634** | 610 358 | CBS |
| **SAGONA** | | | | | | | | | | | |
| 1500,1500 i | 21099 | E | 1499 | VAZ21083,VAZ2108320,VAZ21083K | M | - | TSW | 09/91 ▸ 1999 | 21081301012 | **730317** | 480 341 | ALM |
| 1.5 D | 21099 | D | 1527 | TUD5 | M | | TSW | 07/95 ▸ 1999 | SD210801301012 | **731498** | 390 322 | ALM |
| **SAMARA** | | | | | | | | | | | |
| 1100 | 21091 ; 21081 | E | 1099 | VAZ21081,VAZ21081K | M | - | TSW | 07/86 ▸ 1996 | 21081301012 | **730317** | 480 341 | ALM |
| 1300 | 2108 ; 21090 ; 21080 | E | 1288 | VAZ2108 | M | - | TSW | 07/86 ▸ 1997 | 21081301012 | **730317** | 480 341 | ALM |
| 1300 | 21090 ; 21080 ; 21091 | E | 1288 | VAZ2108,VAZ2108K | M | - | TSW | 10/88 ▸ | 210811301010 | **730317** | 480 341 | ALM |
| 1300 | 21091 ; 21090 ; 21080 | E | 1288 | VAZ2108,VAZ2108K | M | | TSW | 10/88 ▸ 1997 | 21081301012 | **730317** | 480 341 | ALM |
| 1500,1500 i | 21083 ; 21093 | E | 1499 | VAZ21083,VAZ2108320,VAZ21083K | M | - | TSW | 07/86 ▸ 1999 | 21081301012 | **730317** | 480 341 | ALM |
| 1.5 D | 21095 ; 21085 | D | 1527 | TUD5 | M | | TSW | 03/95 ▸ 1999 | SD210801301012 | **731498** | 390 322 | ALM |
| **LANCIA** | | | | | | | | | | | |
| **DEDRA** | | | | | | | | | | | |
| 1.6 ie | 835/AA54A/AB54A BA54A | E | 1581 | 835A1.000,835A1.046 | M | + | PIP+ TSW | 03/89 ▸ 06/94 | 7641779 | **811071** | 502 377,5 | ALM |
| 1.6 ie,1.6 ie 16V | 835/AA54A/AB54A AN54A/BA54A/EB54A/EB55B/EI55B | E | 1581 | 159B9.000,182A4.000,835A1.000 835A1.046,835C1.000 | M | + | PIP+ TSW | 03/89 ▸ 09/99 | 71735362 | **811073** | 558 377,5 | ALM |
| 1.6 ie | 835/AA54A/AB54A BA54A | E | 1581 | 835A1.000,835A1.046 | M | + | PIP+ | 03/89 ▸ 06/94 | 7641779 | | 502 377,5 | ALM |
| 1.6 ie 16V | 835/EI54A/EI55B | E | 1581 | 182A4.000 | M | + | TSW | 12/97 ▸ 09/99 | 46551214 | **731592** | 558 377,5 | ALM |
| 1.6 ie | 835/AA54A/AB54A BA54A | E | 1581 | 835A1.000,835A1.046 | M | - | TSW | 03/89 ▸ 06/94 | 7732873 | **811070** | 496 322 | ALM |
| 1.6 ie,1.6 ie 16V | 835/AN54A/EB54A EB55B/EI55B | E | 1581 | 159B9.000,182A4.000,835C1.000 | M | - | PIP+ TSW | 10/92 ▸ 09/99 | 7775153 | **811071** | 502 377,5 | ALM |
| 1.6 ie 16V | 835/EI54A/EI55B | E | 1581 | 182A4.000 | M | - | PIP+ TSW | 12/97 ▸ 09/99 | 46517134 | **811071** | 502 377,5 | ALM |
| 1.6 ie | 835/AA54A/AB54A BA54A | E | 1581 | 835A1.000,835A1.046 | M | | TSW | 03/89 ▸ 06/94 | 7666079 | **811070** | 496 322 | ALM |
| 1.8 ie 16V | 835/EH54A/EH55B FG54A/FG55B | E | 1747 | 182A2.000,183A1.000 | M | + | TSW | 03/96 ▸ 09/99 | 46421466 | **731592** | 558 377,5 | ALM |
| 1.8 ie 16V | 835/FG54A/FG55B | E | 1747 | 182A2.000 | M | - | | 03/96 ▸ 09/99 | 46551210 | | 502 377,5 | ALM |
| 1.8 ie 16V | 835/EH54A/EH55B FG54A/FG55B | E | 1747 | 182A2.000,183A1.000 | M | - | | 03/96 ▸ 09/99 | 46423217 | | 502 377,5 | ALM |
| 1.8 ie | 835/AC54A/AD54A AT54A/BC54A/BD54A/CD54A | E | 1756 | 835A2.000,835A2.046,835C5.000 | M | + | | 03/89 ▸ 06/94 | 71735347 | | 554 374 | CBS |
| 1.8 ie | 835/FA54A/FA55B | E | 1756 | 836A5.000 | M | + | PIP+ TSW | 07/94 ▸ 09/99 | 46405421 | **811073** | 558 377,5 | ALM |
| 1.8 ie 4109548, 4127157 ▸ | 835/FA54A/FA55B | E | 1756 | 836A5.000 | M | + | TSW | 10/95 ▸ 09/99 | 46421466 | **731592** | 558 377,5 | ALM |
| 1.8 ie | 835/AC54A/AD54A AT54A/BC54A/BD54A/CD54A/FA54A/FA55B | E | 1756 | 835A2.000,835A2.046,835C5.000 836A5.000 | M | - | PIP+ TSW | 03/89 ▸ 09/99 | 46403098 | **811071** | 502 377,5 | ALM |
| 1.8 ie 4109548, 4127157 ▸ | 835/FA54A/FA55B | E | 1756 | 836A5.000 | M | - | | 10/95 ▸ 09/99 | 46423217 | | 502 377,5 | ALM |
| 1.8 ie | 835/AC54A/AD54A AT54A/BC54A/BD54A/CD54A | E | 1756 | 835A2.000,835A2.046,835C5.000 | M | | PIP+ TSW | 03/89 ▸ 06/94 | 7612178 | **811071** | 502 377,5 | ALM |
| 2.0 ie,2.0 ie 16V | 835/AI54A/AL54A ED55W | E | 1995 | 835A5.000,835A5.046,836A3.000 | M | + | | 03/89 ▸ 1996 | 82440263 | | 554 374 | CBS |
| 2.0 ie Turbo | 835AO54W | E | 1995 | 835A7.000 | M | + | TSW | 12/90 ▸ 06/94 | 82461145 | **730838** | 554 374,2 | ALB |
| 2.0 ie Turbo | 835/AO54W/AP54W AQ54A/AR54A | E | 1995 | 835A7.000,835A7.046,835A8.000 835A8.046 | M | + | TSW | 12/90 ▸ 06/94 | 82461146 | **730838** | 554 374,2 | ALB |
| 2.0 ie 16V | 835/ED54A/ED55B | E | 1995 | 836A3.000 | M | + | | 07/94 ▸ 09/99 | 7699793 | | 554 374 | CBS |
| 2.0 ie 16V | 835ED55W | E | 1995 | 836A3.000 | M | + | PIP+ TSW | 09/94 ▸ 1996 | 46405475 | **811073** | 558 377,5 | ALM |
| 2.0 ie | 835/AI54A/AL54A | E | 1995 | 835A5.000,835A5.046 | M | - | PIP+ TSW | 03/89 ▸ 06/94 | 46403098 | **811071** | 502 377,5 | ALM |
| 2.0 ie Turbo | 835/AP54W/AQ54A AR54A | E | 1995 | 835A7.046,835A8.000,835A8.046 | M | - | TSW | 12/90 ▸ 06/94 | 82461145 | **730838** | 554 374,2 | ALB |
| 2.0 ie 16V | 835/ED54A/ED55B | E | 1995 | 836A3.000 | M | - | PIP+ TSW | 07/94 ▸ 09/99 | 7766965 | **811073** | 558 377,5 | ALM |
| 2.0 ie | 835/AI54A/AL54A | E | 1995 | 835A5.000,835A5.046 | M | | PIP+ TSW | 03/89 ▸ 06/94 | 7612178 | **811071** | 502 377,5 | ALM |
| 2.0 ie | 835AL44A | E | 1995 | 835A5.046 | A | + | | 12/90 ▸ 06/94 | 7699793 | | 554 374 | CBS |
| 2.0 ie | 835EC44A | E | 1995 | 835A5.046 | A | + | PIP+ TSW | 07/94 ▸ 09/99 | 46405475 | **811073** | 558 377,5 | ALM |
| 2.0 ie | 835/AL44A/EC44A | E | 1995 | 835A5.046 | A | - | | 12/90 ▸ 09/99 | 82440263 | | 554 374 | CBS |

# LANCIA (.../...)

## DEDRA (.../...)

| | | | CC | | | AC | | | OE | Valeo | DIM. | TECH |
|---|---|---|---|---|---|---|---|---|---|---|---|---|
| 2.0 ie | 835AL44A | E | 1995 | 835A5.046 | A | | PIP+ TSW | 12/90 ▸ 06/94 | 7612178 | **811071** | 502 377,5 | ALM |
| 1.9 TDs | 835/AG54A/AG54A | D | 1929 | 835A4.000 | M | +/- | TSW | > ▸ 06/94 | 7727204 | **810949** | 554 374,2 | ALM |
| 1.9 TDs | 835/AG54A/AG54A | D | 1929 | 835A4.000 | M | +/- | TSW | 03/89 ▸ | 71735353 | **810949** | 554 374,2 | ALM |
| 1.9 Tds | 835/EE54A/EE55B EF54A/EF55B | D | 1929 | 160D1.000,835A4.000 | M | + | | 07/94 ▸ 09/99 | 46405473 | | 554 374 | CBS |
| 1.9 TDs 4127157 ▸ | 835/EE54A/EF54A | D | 1929 | 160D1.000,835A4.000 | M | + | TSW | 11/96 ▸ 09/99 | 71735353 | **810949** | 554 374,2 | ALM |
| 1.9 TDs | 835/AS54A/EE54A EE55B/EF54A/EF55B | D | 1929 | 160D1.000,835A4.000 | M | - | | 01/94 ▸ 09/99 | 46404422 | | 554 367 | CBS |
| 1.9 TDs 4127157 ▸ | 835/EE54A/EF54A | D | 1929 | 160D1.000,835A4.000 | M | - | PIP+ TSW | 11/96 ▸ 09/99 | 71736501 | **811073** | 558 377,5 | ALM |
| 1.9 TDs | 835/AG54A/AG54A AS54A | D | 1929 | 160D1.000,835A4.000 | M | | TSW | 03/89 ▸ 06/94 | 7610803 | **810949** | 554 374,2 | ALM |
| 1.9 TDs | 835AS54A | D | 1929 | 160D1.000 | M | + | TSW | 03/89 ▸ 01/94 | 7727204 | **810949** | 554 374,2 | ALM |

## DELTA (79>86)

| | | | | | | | | | | | | |
|---|---|---|---|---|---|---|---|---|---|---|---|---|
| 1300 | 831/AB03/AB04 | E | 1301 | 831A.000 | M | + | | 09/82 ▸ 04/86 | 82429175 | | 520 322 | ALM |
| 1300 | 831/AB03/AB04 | E | 1301 | 831A.000 | M | - | | 09/79 ▸ 08/82 | 82372829 | | 345 375 | CBS |
| 1300 | 831/AB03/AB04 | E | 1301 | 831A.000 | M | - | | 11/85 ▸ 04/86 | 82416371 | | 463 322 | ALM |
| 1500 | 831AB01 | E | 1498 | 831A1.000 | M | + | | 09/82 ▸ 04/86 | 82429175 | | 520 322 | ALM |
| 1500 | 831AB01 | E | 1498 | 831A1.000 | M | - | | 09/79 ▸ 08/82 | 82372829 | | 345 375 | CBS |
| 1500 | 831AB01 | E | 1498 | 831A1.000 | M | - | | 11/85 ▸ 04/86 | 82416371 | | 463 322 | ALM |
| 1500 | 831AB08B | E | 1498 | 831A1.000 | A | - | | 09/82 ▸ 04/86 | 82429175 | | 520 322 | ALM |
| 1600 | 831AB06 | E | 1585 | 831A4.000 | M | + | | 10/82 ▸ 04/86 | 82429175 | | 520 322 | ALM |
| 1600 Turbo | 831AB07 | E | 1585 | 831A7.000 | M | - | | 04/83 ▸ 04/86 | 82416330 | | 423 342 | CBS |
| 1600 | 831AB06 | E | 1585 | 831A4.000 | M | - | | 11/85 ▸ 04/86 | 82416371 | | 463 322 | ALM |
| 1600 Turbo | 831AB07 | E | 1585 | 831A7.000 | M | | | 04/83 ▸ 04/86 | 82442766 | | 423 342 | CBS |

## DELTA (86>93)

| | | | | | | | | | | | | |
|---|---|---|---|---|---|---|---|---|---|---|---|---|
| 1.1 i | 831AB015 | E | 1116 | 831B8.000 | M | - | TSW | 04/86 ▸ 12/90 | 82416664 | **811381** | 463 322 | ALM |
| 1300 | 831/AB011/AB022 | E | 1301 | 831B.000 | M | - | TSW | 05/86 ▸ 1993 | 82416664 | **811381** | 463 322 | ALM |
| 1500 | 831/AB014/AB025 | E | 1498 | 831A1.000,831B1.000 | A | - | TSW | 05/86 ▸ 1993 | 82416664 | **811381** | 463 322 | ALM |
| 1600 Turbo,1600 ie 1600 ie Turbo | 831/AB010/AB016 AB017/AB020/AB020S | E | 1585 | 149C2.000,831B3.000,831B7.000 831B7.046 | M | + | | 05/86 ▸ 1993 | 82429175 | | 520 322 | ALM |
| 1600 ie | 831AB016 | E | 1585 | 831B7.000 | M | + | TSW | 05/86 ▸ 1993 | 82416664 | **811381** | 463 322 | ALM |
| 1600 ie 0651166 ▸ | 831/AB010/AB016 | E | 1585 | 149C2.000,831B7.000 | M | - | TSW | > ▸ 1993 | 82416664 | **811381** | 463 322 | ALM |
| 1600 ie 0651166 ▸ | 831AB016 | E | 1585 | 831B7.000 | M | | TSW | > ▸ 1993 | 82416664 | **811381** | 463 322 | ALM |
| 1600 Turbo,1600 ie Turbo | 831/AB017/AB020 AB020S | E | 1585 | 831B3.000,831B7.046 | M | | | 05/86 ▸ 1993 | 82442766 | | 423 342 | CBS |
| 1600 ie ▸ 0651165 | 831AB016 | E | 1585 | 831B7.000 | M | - | TSW | 05/86 ▸ | 82429172 | **811056** | 464 322 | ALM |
| 2.0 i Turbo 2.0 i Turbo 16S | 831/AB024P/AB024S AB026/AB027/AB028 AB029 | E | 1995 | 831C5.000,831C5.046,831D5.000 831E5.000,831E5.046 | M | +/- | TSW | 08/88 ▸ 1994 | 82440378 | **730319** | 477 374 | ALB |
| 2.0 i Turbo | 831/AB019/AB024 | E | 1995 | 831B5.000,831C5.000 | M | - | | 04/86 ▸ 07/88 | 82416330 | | 423 342 | CBS |
| 2.0 i Turbo | 831/AB019/AB024 | E | 1995 | 831B5.000,831C5.000 | M | | | 04/86 ▸ 07/88 | 82442766 | | 423 342 | CBS |
| 1.9 TD | 831/AB018/AB021 | D | 1929 | 831D1.000 | M | - | | 04/86 ▸ 1993 | 82408777 | | 602 342 | CBS |

## DELTA (93>99)

| | | | | | | | | | | | | |
|---|---|---|---|---|---|---|---|---|---|---|---|---|
| 1.4 ie | 836/AF55A/AH55A | E | 1372 | 160A1.046,836A4.000 | M | + | PIP+ TSW | 03/93 ▸ 08/99 | 71735362 | **811073** | 558 377,5 | ALM |
| 1.4 ie | 836/AF55A/AH55A | E | 1372 | 160A1.046,836A4.000 | M | - | | 03/93 ▸ 08/99 | 7736950 | | 558 377,5 | ALM |
| 1.6 ie,1.6 ie 16V 3297146 ▸ | 836/AO53A/AO55A AP53A/AP55A | E | 1581 | 182A4.000,182A6.000 | M | + | TSW | > ▸ 08/99 | 46421463 | **731592** | 558 377,5 | ALM |
| 1.6 ie | 836/AD55A/BD55A | E | 1581 | 835C1.000 | M | + | PIP+ TSW | 03/93 ▸ 08/99 | 71735362 | **811073** | 558 377,5 | ALM |
| 1.6 ie | 836/AD55A/AP53A AP55A/BD55A | E | 1581 | 182A6.000,835C1.000 | M | + | PIP+ TSW | 03/93 ▸ 08/99 | 7611159 | **811073** | 558 377,5 | ALM |
| 1.6 ie,1.6 ie 16V | 836/AO53A/AO55A AP53A/AP55A | E | 1581 | 182A4.000,182A6.000 | M | + | PIP+ TSW | 07/95 ▸ | 7766965 | **811073** | 558 377,5 | ALM |
| 1.6 ie,1.6 ie 16V 3297145 ▸ | 836/AO53A/AO55A AP53A/AP55A | E | 1581 | 182A4.000,182A6.000 | M | - | PIP+ TSW | > ▸ 08/99 | 46517134 | **811071** | 502 377,5 | ALM |
| 1.6 ie | 836/AD55A/AP53A AP55A/BD55A | E | 1581 | 182A6.000,835C1.000 | M | - | | 03/93 ▸ 08/99 | 7736950 | | 558 377,5 | ALM |

Radiator Radiateur Motorkühler Radiatore di raffreddamento Radiator Radyatör Radiador Радиатор vízhűtő Vodní chladič Radiator Ψυγείο



• **New** Nouveau **Nuevo** Novo **Nuovo** Nieuw **Neu** Nowość **Yeni** Новый Νέο **Novy**

# LANCIA (.../...)

## DELTA (93>99) (.../...)

| | | | CC | | | AC | | | OE | Valeo | DIM. | TECH |
|---|---|---|---|---|---|---|---|---|---|---|---|---|
| 1.6 ie,1.6 ie 16V | 836/AO53A/AO55A AP53A/AP55A | E | 1581 | 182A4.000,182A6.000 | M | - | PIP+ TSW | 07/95 ▸ | 60811291 | **811071** | 502 377,5 | ALM |
| 1.8 ie 16V | 836/AQ55A/AR53A AR55A | E | 1747 | 182A2.000,183A1.000 | M | + | TSW | 07/95 ▸ 08/99 | 71735370 | **731592** | 558 377,5 | ALM |
| 1.8 ie 16V | 836/AR53A/AR55A | E | 1747 | 183A1.000 | M | + | | 05/96 ▸ 08/99 | 46423217 | | 502 377,5 | ALM |
| 1.8 ie 16V | 836AQ55A | E | 1747 | 182A2.000 | M | - | | 07/95 ▸ 08/99 | 46423217 | | 502 377,5 | ALM |
| 1.8 ie | 836/AE55A/AG55A AI55A/AL55A/BE55A/BI55A | E | 1756 | 835C2.000,835C4.000,836A5.000 836A6.000 | M | + | | 03/93 ▸ 08/99 | 71735347 | | 554 374 | CBS |
| 1.8 ie | 836/AE55A/AG55A BE55A | E | 1756 | 835C2.000,835C4.000 | M | + | | 03/93 ▸ 08/99 | 82440263 | | 554 374 | CBS |
| 1.8 ie | 836/AE55A/AG55A AI55A/AL55A/BE55A/BI55A | E | 1756 | 835C2.000,835C4.000,836A5.000 836A6.000 | M | - | PIP+ TSW | 03/93 ▸ 08/99 | 7766965 | **811073** | 558 377,5 | ALM |
| 1.8 ie | 836/AI55A/AL55A BI55A | E | 1756 | 836A5.000,836A6.000 | M | - | | 12/94 ▸ 08/99 | 82440263 | | 554 374 | CBS |
| 2.0 i Turbo 16V | 836/AB53A/AB55A | E | 1995 | 836A2.000 | M | +/- | TSW | 03/93 ▸ 08/99 | 82461146 | **730838** | 554 374,2 | ALB |
| 2.0 i 16V | 836/AA55A/CA53A CA55A | E | 1995 | 836A3.000 | M | + | | 03/93 ▸ 08/99 | 7699793 | | 554 374 | CBS |
| 2.0 i 16V | 836/AA55A/CA53A CA55A | E | 1995 | 836A3.000 | M | - | PIP+ TSW | 03/93 ▸ 08/99 | 7766965 | **811073** | 558 377,5 | ALM |
| 2.0 i Turbo 16V | 836AS53A | E | 1995 | 175A4.000 | M | - | TSW | 07/96 ▸ 08/99 | 82461146 | **730838** | 554 374,2 | ALB |
| 1.9 TD | 836/AM53A/AM55A AN53A/AN55A | D | 1929 | 160D1.000,835A4.000 | M | + | TSW | 06/94 ▸ 08/99 | 71735353 | **810949** | 554 374,2 | ALM |
| 1.9 TD | 836/AM53A/AM55A AN53A/AN55A | D | 1929 | 160D1.000,835A4.000 | M | - | PIP+ TSW | 06/94 ▸ 08/99 | 71736501 | **811073** | 558 377,5 | ALM |

## DELTA (2008>)

| | | | | | | | | | | | | |
|---|---|---|---|---|---|---|---|---|---|---|---|---|
| 1.4 TJet 16V | 844/AXA1A/AXB1A | E | 1368 | 198A1.000,198A4.000 | M | | | 06/08 ▸ | 55704135 | **735041** | 620 414,5 | ALB |
| 1.6 MJTD 16V | 844/AXC11/AXF11 | D | 1598 | 198A2.000,198A2.000/F,955A4.000 955A4.000/F | M | | | 06/08 ▸ | 55704135 | **735041** | 620 414,5 | ALB |

## KAPPA

| | | | | | | | | | | | | |
|---|---|---|---|---|---|---|---|---|---|---|---|---|
| 2.0 ie Turbo 16V | 838/AB1AA/BB1AA CB1AA/XB1AA | E | 1995 | 834A4.000,838A4.000 | M | +/- | | 07/95 ▸ 10/01 | 7799061 | **731281** | 488 418 | ALB |
| 2.0 ie 20V | 838/AA1AA/AG1AA BG1AA | E | 1995 | 838A1.000,838A6.000 | M | + | | 10/94 ▸ 10/01 | 82458169 | **731276** | 532 418 | ALB |
| 2.0 ie 20V | 838/AA1AA/AG1AA BG1AA | E | 1995 | 838A1.000,838A6.000 | M | - | | 10/94 ▸ 10/01 | 7785927 | **731282** | 520 414 | ALM |
| 2.0 ie 20V | 838/AA1AA/AG1AAA | E | 1995 | 838A1.000,838A6.000 | A | + | | 10/94 ▸ 10/01 | 82489631 | | 660 418 | ALB |
| 2.0 ie 20V | 838/AA1AA/AG1AAA | E | 1995 | 838A1.000,838A6.000 | A | - | | 10/94 ▸ 10/01 | 82458169 | **731276** | 532 418 | ALB |
| 2.0 ie Turbo 20V | 838/BM1AA/CM1AA | E | 1998 | 175A3.000 | M | +/- | | 05/98 ▸ 10/01 | 7799061 | **731281** | 488 418 | ALB |
| 2.4 ie 20V | 838/CC11A/CC1AA | E | 2446 | 838A2.000,838B2.000 | M | +/- | | 03/97 ▸ | 82458169 | **731276** | 532 418 | ALB |
| 2.4 ie 20V | 838CC11A | E | 2446 | 838B2.000 | M | +/- | | 12/98 ▸ 10/00 | 82489631 | | 660 418 | ALB |
| 2.4 ie 20V | 838/AC1AA/AI1AA BC1AA | E | 2446 | 838A2.000,838A2.027 | M | + | | 10/94 ▸ 10/01 | 82458169 | **731276** | 532 418 | ALB |
| 2.4 ie 20V | 838/AC1AA/AI1AA BC1AA | E | 2446 | 838A2.000,838A2.027 | M | - | | 10/94 ▸ 10/01 | 7785927 | **731282** | 520 414 | ALM |
| 2.4 ie 20V | 838BC11A | E | 2446 | 838A2.000 | A | + | | 05/96 ▸ 10/01 | 82489631 | | 660 418 | ALB |
| 2.4 ie 20V | 838BC11A | E | 2446 | 838A2.000 | A | + | | 05/96 ▸ 10/01 | 82458169 | **731276** | 532 418 | ALB |
| 2.4 ie 20V | 838BC11A | E | 2446 | 838A2.000 | A | - | | 05/96 ▸ 10/01 | 7785927 | **731282** | 520 414 | ALM |
| 3.0 ie V6 24V | 838/AD1AAA/BD1AA XD1AA/YD1AA/ZD1AA 2051778 ▸ | E | 2959 | 838B.000 | M | +/- | | > ▸ 10/01 | 46403965 | | 582 418 | ALB |
| 3.0 ie V6 24V | 838/AD11AA/BD11A BD1AAA/CD11A/CD1AA/XD1AA 2051778 ▸ | E | 2959 | 838B.000 | A | +/- | | > ▸ 10/01 | 46403967 | | 660 418 | ALB |
| 3.0 ie V6 24V | 838AD1AAA ▸ 2051777 | E | 2959 | 838B.000 | M | +/- | | 10/94 ▸ | 82479107 | | 582 418 | ALB |
| 3.0 ie V6 24V | 838AD11AA ▸ 2051777 | E | 2959 | 838B.000 | A | +/- | | 11/94 ▸ | 82489090 | | 660 418 | ALB |
| 2.4 JTD,2.4 TDs | 838/AE1AA/AH1AA AL1AA/BH1AA/BL1AA | D | 2387 | 838A3.000,838A7.000,838A8.000 | M | +/- | TSW | 10/94 ▸ 10/01 | 82489087 | **731278** | 558 438 | ALB |

## LYBRA

| | | | | | | | | | | | | |
|---|---|---|---|---|---|---|---|---|---|---|---|---|
| 1.6 i 16V | 839/AXA1A0/BXA1A0 | E | 1581 | 182A4.000 | M | + | | 09/99 ▸ 12/06 | 46545309 | | 520 414,5 | ALM |
| 1.6 i 16V | 839/AXA1A0/BXA1A0 | E | 1581 | 182A4.000 | M | | | 09/99 ▸ 12/06 | 46544775 | **732580** | 580 414,5 | ALM |
| 1.6 i 16V | 839/AXF1A/BXF1A | E | 1596 | 182B6.000 | M | - | | 09/99 ▸ 12/06 | 46545309 | | 520 414,5 | ALM |
| 1.6 i 16V | 839/AXF1A/BXF1A | E | 1596 | 182B6.000 | M | | | 09/99 ▸ 12/06 | 46544775 | **732580** | 580 414,5 | ALM |
| 1.8 i 16V | 839/AXB1A0/BXB1A0 | E | 1747 | 839A4.000 | M | + | | 09/99 ▸ 12/06 | 46545309 | | 520 414,5 | ALM |
| 1.8 i 16V | 839/AXG1A/BXG1A | E | 1747 | 839A7.000 | M | - | | 09/99 ▸ 12/06 | 46545309 | | 520 414,5 | ALM |

| Type Ctr. | | CC | | AC | | 2+3 | OE | Valeo | DIM. | TECH |
|---|---|---|---|---|---|---|---|---|---|---|
| **LANCIA (.../...)** | | | | | | | | | | |
| **LYBRA (.../...)** | | | | | | | | | | |
| 1.8 i 16V 839/AXB1A0/AXG1A BXB1A0/BXG1A | E | 1747 | 839A4.000,839A7.000 | M | | | 09/99 ▸ 12/06 | 46544780 | **732582** | 578,6 413,7 ALB |
| 2.0 i 20V 839/AXH1A/BXH1A | E | 1998 | 182B7.000,185A8.000 | M | | | 09/99 ▸ 12/06 | 46544780 | **732582** | 578,6 413,7 ALB |
| 2.0 i 20V 839/AXC111/BXC111 | E | 1998 | 182B7.000 | A | + | | 09/99 ▸ 10/00 | 46753255 | **732584** | 580 398 ALB |
| 1.9 JTD 839/AXD1A0/AXI1A BXD1A0/BXI1A | D | 1910 | AR32302,AR37101 | M | + | | 09/99 ▸ 12/06 | 46547643 | | 580 394 CBS |
| 1.9 JTD 839/AXI1A/BXI1A | D | 1910 | 937A2.000 | M | - | | 09/99 ▸ 12/06 | 46547643 | | 580 394 CBS |
| 1.9 JTD 839/AXD1A0/AXI1A BXD1A0/BXI1A | D | 1910 | 937A2.000,AR32302,AR37101 | M | | | 09/99 ▸ 12/06 | 46753255 | **732584** | 580 398 ALB |
| 2.4 JTD 839/AXE1A/AXE1A0 AXL1A/BXE1A/BXE1A0/BXL1A | D | 2387 | 839A5.000,839A6.000,AR32501 | M | + | | 09/99 ▸ 07/06 | 46547643 | | 580 394 CBS |
| 2.4 JTD 839//AXE1A/AXE1A0 AXL1A/BXE1A/BXE1A0/BXL1A | D | 2387 | 839A5.000,839A6.000,841C.000 AR32501 | M | | | 09/99 ▸ 12/06 | 46753255 | **732584** | 580 398 ALB |
| **MUSA (2004>2006)** | | | | | | | | | | |
| 1.4 MPi,1.4 i 16V 350/AXA11/AXA1A AXF1A | E | 1368 | 192B2.000,350A1.000,843A1.000 | M | +/- | | 07/04 ▸ 09/07 | 51706942 | **734362** | 580 305 ALB |
| 1.3 JTD Multijet 16V 350/AXB11/AXB1A | D | 1248 | 188A9.000 | M | +/- | | 07/04 ▸ 04/05 | 51708005 | **734361** | 580 305 ALB |
| 1.3 JTD Multijet 16V 350/AXB11/AXB1A | D | 1248 | 188A9.000,199A3.000 | M | +/- | | 04/05 ▸ 09/07 | 46834067 | **734364** | 580 305 ALB |
| 1.9 JTD 350AXC1A | D | 1910 | 188B2.000 | M | +/- | | 07/04 ▸ 09/07 | 51708727 | **732913** | 580 322 ALM |
| **MUSA (2007>)** | | | | | | | | | | |
| 1.4 MPi 350AXF1A | F | 1368 | 350A1.000 | M | | | 03/09 ▸ | 51706942 | **734362** | 580 305 ALB |
| 1.4 i 16V 350AXA1A | E | 1368 | 843A1.000 | M | +/- | | 10/07 ▸ | 51706942 | **734362** | 580 305 ALB |
| 1.4 MPi,1.4 i 16V 350/AXA11/AXA110 AXA1B/AXF1A | E | 1368 | 350A1.000,843A1.000 | M | | | 10/07 ▸ | 51706942 | **734362** | 580 305 ALB |
| 1.3 MJTD 16V 350AXB1A | D | 1248 | 188A9.000 | M | +/- | | 10/07 ▸ | 46834067 | **734364** | 580 305 ALB |
| 1.3 MJTD 16V 350/AXG1A/AXM111 | D | 1248 | 199A3.000,199B1.000 | M | | | 10/07 ▸ | 46834067 | **734364** | 580 305 ALB |
| 1.9 JTD 350AXC1A | D | 1910 | 188B2.000 | M | +/- | | 10/07 ▸ | 51708727 | **732913** | 580 322 ALM |
| **PHEDRA** | | | | | | | | | | |
| 2.0 i 16V 179/AXA1A/AXB1A | E | 1997 | EW10J4 | M | | | 09/02 ▸ 2010 | 9641728080 | **732830** | 465 551,3 ALM |
| 2.0 JTD 16V 179AXB1A | D | 1997 | DW10ATED4 | M | | | 09/02 ▸ 2010 | 9641728380 | **732881** | 464 562,8 ALB |
| 2.0 JTD 16V 179AXE1A | D | 1997 | DW10ATED4 | A | | | 03/03 ▸ 2010 | 9641728380 | **732881** | 464 562,8 ALB |
| 2.2 JTD 16V 179AXC1A | D | 2179 | DW12ATED4/L4 | M | + | | 09/02 ▸ 02/04 | 9641728380 | **732881** | 464 562,8 ALB |
| **PRISMA** | | | | | | | | | | |
| 1300 831AB0A 3052887 ▸ | E | 1301 | 831B.000 | M | + | | 01/83 ▸ 05/86 | 82407560 | | 520 322 ALM |
| 1300 831AB0A | E | 1301 | 831B.000 | M | - | | 11/85 ▸ 05/86 | 82416371 | | 463 322 ALM |
| 1300 831/AB0L/AB0L1 | E | 1301 | 831B.000 | M | - | TSW | 06/86 ▸ 04/89 | 82416664 | **811381** | 463 322 ALM |
| 1300 831AB0A ▸ 3052887 | E | 1301 | 831B.000 | M | + | | 01/83 ▸ | 82387450 | | 520 322 ALM |
| 1500 831AB0B 3052887 ▸ | E | 1498 | 831B1.000 | M | + | | 04/83 ▸ 05/86 | 82407560 | | 520 322 ALM |
| 1500 831AB0B | E | 1498 | 831B1.000 | M | - | | 11/85 ▸ 05/86 | 82416371 | | 463 322 ALM |
| 1500 831AB0N | E | 1498 | 831B1.000 | M | - | TSW | 06/86 ▸ 04/89 | 82416664 | **811381** | 463 322 ALM |
| 1500 831AB0CB 3052887 ▸ | E | 1498 | 831B1.000 | A | + | | 04/83 ▸ 05/86 | 82407450 | | 520 322 ALM |
| 1500 831AB0CB 3052887 ▸ | E | 1498 | 831B1.000 | A | - | | > ▸ 05/86 | 82407449 | | 520 322 ALM |
| 1500 831AB0CB | E | 1498 | 831B1.000 | A | - | | 11/85 ▸ 05/86 | 82416371 | | 463 322 ALM |
| 1500 831AB0O | E | 1498 | 831B1.000 | A | - | TSW | 06/86 ▸ 04/89 | 82416664 | **811381** | 463 322 ALM |
| 1500 831AB0B ▸ 3052887 | E | 1498 | 831B1.000 | M | + | | 04/83 ▸ | 82387450 | | 520 322 ALM |
| 1500 831AB0CB ▸ 3052887 | E | 1498 | 831B1.000 | A | + | | 04/83 ▸ | 82387450 | | 520 322 ALM |
| 1600,1600 ie 831/AB0R/AB0V/AB0V1 AB0V2 | E | 1585 | 831B6.000,831B7.000 | M | + | | 04/86 ▸ 04/89 | 82429175 | | 520 322 ALM |
| 1600 831/AB0D/AB0V/AB0V1/AB0V2 | E | 1585 | 831B6.000 | M | - | TSW | 04/83 ▸ 04/89 | 82416664 | **811381** | 463 322 ALM |
| 1600 ie 831AB0R | E | 1585 | 831B7.000 | M | - | TSW | 04/86 ▸ 04/89 | 82429172 | **811056** | 464 322 ALM |
| 2000 ie 831AB0U | E | 1995 | 828B1.000 | M | - | | 04/86 ▸ 04/89 | 82425861 | | 423 342 CBS |
| 1.9 TD,1900 D 831/AB0E/AB0S/AB0T | D | 1929 | 149A1.000,831D1.000 | M | + | | 06/84 ▸ 05/87 | 82426853 | | 602 342 CBS |
| 1.9 TD,1900 D 831/AB0F/AB0S1 | D | 1929 | 149A1.000,831D1.000 | M | + | | 05/85 ▸ 04/89 | 82408777 | | 602 342 CBS |
| 1900 D 831/AB0E/AB0S | D | 1929 | 149A1.000 | M | - | | 06/84 ▸ 05/87 | 7572602 | | 601 347 ALB |
| 1.9 TD,1900 D 831/AB0F/AB0S1 | D | 1929 | 149A1.000,831D1.000 | M | - | | 05/85 ▸ 04/89 | 82426853 | | 602 342 CBS |
| 1.9 TD 831AB0T | D | 1929 | 831D1.000 | M | - | | 06/86 ▸ 05/87 | 82408777 | | 602 342 CBS |
| **THEMA** | | | | | | | | | | |
| 2000 ie 16V 834/AC/AC54A/AI 2000 ie Turbo 16V | E | 1995 | 834B2.246,834C1.000 | M | +/- | | 10/88 ▸ 08/92 | 82443104 | | 453 394 CBS |

Radiator Ψυγείο Vodní chladič Радиатор vízhűtő Radiador Radiator Radyatör Radiator Radiatore di raffreddamento Motorkühler Radiateur



• **New** Nouveau **Nuevo** Novo **Nuovo** Nieuw **Neu** Nowość **Yeni** Новый Νέο **Novy**

# LANCIA (.../...)

## THEMA (.../...)

| | | | CC | | AC | | | OE | Valeo | DIM. | TECH |
|---|---|---|---|---|---|---|---|---|---|---|---|
| 2000 ie,2000 ie Turbo | 834/AB/AB54A/B/B1/B2 BV/CV | E | 1995 | 834B.000,834B.146,834B1.000 834C1.146 | M | + | | 10/84 ▸ 08/92 | 82443104 | 453 394 | CBS |
| 2.0 i,2.0 i 16V 2000 ie 16V | 834/AA/AI/FA54A FA55C/FA64A/FB54A | E | 1995 | 834B.146,834B2.000,834B2.246 834F1.000 | M | + | | 10/88 ▸ 11/94 | 82443108 | 515 388 | ALB |
| 2.0 i,2.0 i 16V | 834/FA54A/FA55C FA64A/FA65C/FB54A | E | 1995 | 834B.146,834F1.000 | M | + | | 09/92 ▸ 11/94 | 82479354 | 515 388 | ALB |
| 2000 ie 270427, 0270428 ▸ | 834/AB/AB54A/BV | E | 1995 | 834B.146,834B1.000 | M | - | | > ▸ 08/92 | 82462737 | 453 394 | CBS |
| 2.0 i,2.0 i 16V 2000 ie 16V | 834/AA/AI/FA54A FA55C/FA64A/FA65C FB54A | E | 1995 | 834B.146,834B2.000,834B2.246 834F1.000 | M | - | | 10/88 ▸ 11/94 | 82443104 | 453 394 | CBS |
| 2.0 i,2.0 i 16V | 834/FA54A/FA55C FA64A/FA65C/FB54A | E | 1995 | 834B.146,834F1.000 | M | - | | 09/92 ▸ 11/94 | 82479348 | 453 394 | CBS |
| 2.0 i 16V | 834FA65C | E | 1995 | 834F1.000 | M | - | | 09/92 ▸ 11/94 | 82443108 | 515 388 | ALB |
| 2.0 i Turbo 16V | 834/FC54A/FC55C GC54A/GC55C | E | 1995 | 834F2.000 | M | | | 09/92 ▸ 11/94 | 82449681 | 453 388 | ALB |
| 2.0 i 16V | 834FA44A | E | 1995 | 834F1.000 | A | +/- | | 09/92 ▸ 11/94 | 82448235 | 654 388 | ALB |
| 2000 ie,2000 ie 16V | 834/AA/AI/BA/BA1 | E | 1995 | 834B.000,834B2.000,834B2.246 | A | + | | 10/84 ▸ 08/92 | 82448235 | 654 388 | ALB |
| 2000 ie,2000 ie 16V | 834/AA/AI/BA/BA1 | E | 1995 | 834B.000,834B2.000,834B2.246 | A | - | | 10/84 ▸ 08/92 | 82443108 | 515 388 | ALB |
| 2800 | 834/AD/AF/E/EP | E | 2849 | 834E.000,834E.146 | M | + | | 11/84 ▸ 08/92 | 82443108 | 515 388 | ALB |
| 2800 | 834/AD/AF/E/EP | E | 2849 | 834E.000,834E.146 | M | - | | 11/84 ▸ 08/92 | 82410257 | 453 394 | CBS |
| 2800 | 834AD | E | 2849 | 834E.000 | M | - | | 10/88 ▸ 08/92 | 82443108 | 515 388 | ALB |
| 2800 | 834/AD/AF | E | 2849 | 834E.000,834E.146 | M | - | | 10/88 ▸ 08/92 | 82443104 | 453 394 | CBS |
| 2800 | 834/AD/AF/EA1P | E | 2849 | 834E.000,834E.146 | A | + | | 10/87 ▸ 08/92 | 82443108 | 515 388 | ALB |
| 2800 | 834/AD/AF | E | 2849 | 834E.000,834E.146 | A | + | | 10/88 ▸ 08/92 | 82448235 | 654 388 | ALB |
| 2800 | 834EA | E | 2849 | 834E.000 | A | - | | 10/86 ▸ 09/88 | 82443110 | 515 393 | ALB |
| 2800 | 834/AD/AF/EA1P | E | 2849 | 834E.000,834E.146 | A | - | | 10/87 ▸ 08/92 | 82410257 | 453 394 | CBS |
| 2800 | 834EA | E | 2849 | 834E.000 | A | | | 11/84 ▸ 09/88 | 82443110 | 515 393 | ALB |
| 3.0 | 834FS | E | 2927 | F105L,F105L-K | M | + | | 10/88 ▸ 1991 | 82443112 | 560 388 | ALB |
| 3.0 i V8 | 834F | E | 2927 | F105L | M | - | | 04/86 ▸ 09/88 | 82443112 | 560 388 | ALB |
| 3.0 V6 | 834/FD54A/FD55C GD54A/GD55C | E | 2959 | 834F.000 | M | +/- | | 09/92 ▸ 11/94 | 82462993 | 654 388 | ALB |
| 3.0 V6 | 834FD44A | E | 2959 | 834F.000 | A | +/- | | 09/92 ▸ 11/94 | 82462993 | 654 388 | ALB |
| 2400 TD | 834DPF | D | 2445 | 8144-81 | M | +/- | | 05/87 ▸ 09/88 | 82429970 | 656 385 | CBS |
| 2400 TD | 834DPF | D | 2445 | 8144-81 | M | +/- | | 05/87 ▸ 09/88 | 82410255 | 610 394 | ALB |
| 2400 TD | 834D | D | 2445 | 8144-81 | M | - | | 10/84 ▸ 09/88 | 82410255 | 610 394 | ALB |
| 2400 TD | 834D | D | 2445 | 8144-81 | M | - | | 10/84 ▸ 09/88 | 82429970 | 656 385 | CBS |
| 2500 TD | 834/AE54A/AE55C AM54A/AM55C | D | 2500 | 8144-97,8144-97S | M | +/- | | 10/88 ▸ 08/92 | 82449675 | 654 388,2 | ALB |
| 2.5 TDs | 834/FE54A/FE55C LE54A/LE55C | D | 2500 | 8144-97Y,8144-97YC | M | +/- | | 09/92 ▸ 11/94 | 46414491 | 654 388 | ALB |
| 2500 TD | 834/AE54A/AE55C AM54A/AM55C | D | 2500 | 8144-97,8144-97S | M | + | | 10/88 ▸ 08/92 | 82452773 | 654 388,2 | ALB |
| 2500 TD | 834/AE54A/AE55C AM54A | D | 2500 | 8144-97,8144-97S | M | | | 10/88 ▸ 08/92 | 82410255 | 610 394 | ALB |
| 2500 TD | 834/AE44A/AE85C AM44A/AM85C | D | 2500 | 8144-97,8144-97S | A | +/- | | 10/88 ▸ 08/92 | 82449675 | 654 388,2 | ALB |
| 2500 TD | 834/AE44A/AE85C AM85C | D | 2500 | 8144-97,8144-97S | A | + | | 10/88 ▸ 08/92 | 82452773 | 654 388,2 | ALB |
| 2500 TD | 834/AE44A/AE85C AM44A | D | 2500 | 8144-97,8144-97S | A | | | 10/88 ▸ 08/92 | 82410255 | 610 394 | ALB |

## THESIS

| | | | CC | | AC | | | OE | Valeo | DIM. | TECH |
|---|---|---|---|---|---|---|---|---|---|---|---|
| 2.0 i Turbo 20V | 841AXA1B0 | E | 1998 | 841E.000 | M | + | | 09/02 ▸ | 60679288 | 650 438 | ALB |
| 2.0 i Turbo 20V | 841AXA1B0 | E | 1998 | 841E.000 | M | | | 09/02 ▸ 2005 | 51742221 | 650 438 | ALB |
| 2.4 i 20V | 841AXB1B0 | E | 2446 | 841D.000 | M | + | | 09/02 ▸ | 60679288 | 650 438 | ALB |
| 2.4 i 20V | 841AXB1B0 | E | 2446 | 841D.000 | M | | | 09/02 ▸ 2005 | 51742221 | 650 438 | ALB |
| 2.4 i 20V | 841AXB110 | E | 2446 | 841D.000 | A | | | 09/02 ▸ | 60679288 | 650 438 | ALB |
| 2.4 i 20V | 841AXB110 | E | 2446 | 841D.000 | A | | | 09/02 ▸ 2005 | 51742221 | 650 438 | ALB |
| 3.0 i V6 24V | 841AXC110 | E | 2959 | 841A.000 | A | + | | 09/02 ▸ | 60679288 | 650 438 | ALB |
| 3.0 i V6 24V | 841AXC110 | E | 2959 | 841A.000 | A | | | 09/02 ▸ 03/05 | 51742221 | 650 438 | ALB |
| 2.4 JTD | 841AXD1B0 | D | 2387 | 841C.000 | M | + | | 09/02 ▸ | 60679288 | 650 438 | ALB |
| 2.4 JTD,2.4 JTD 20V | 841/AXD1B0/AXE1B0 AXH110 | D | 2387 | 841C.000,841G.000,841M.000 841N.000 | M | | | 09/02 ▸ 2009 | 51742221 | 650 438 | ALB |
| 2.4 JTD 20V | 841AXH110 | D | 2387 | 841G.000,841H.000,841N.000 | A | | | 09/03 ▸ 2009 | 51742221 | 650 438 | ALB |

## Y IPSILON (95>2000)

| | | | CC | | AC | | | OE | Valeo | DIM. | TECH |
|---|---|---|---|---|---|---|---|---|---|---|---|
| 1.1 i | 840AE1A | E | 1108 | 176B2.000 | M | + | TSW | 04/97 ▸ 08/00 | 46517926 | 734236 | 577 322 | ALM |
| 1.1 i | 840AE1A | E | 1108 | 176B2.000 | M | - | EXP, TSW | 04/97 ▸ 08/00 | 46465015 | 730976 | 435 322 | ALM |
| 1.2 i | 840/AA/AA1A | E | 1242 | 840A3.000 | M | + | TSW | 11/95 ▸ 10/97 | 7785122 | 731980 | 270 757 | CBS |

# LANCIA (.../...)

## Y IPSILON (95>2000) (.../...)

| | | | CC | | | AC | | | OE | Valeo | DIM. | TECH |
|---|---|---|---|---|---|---|---|---|---|---|---|---|
| 1.2 i 16V | 840AD1A | E | 1242 | 176B9.000 | M | + | TSW | 04/97 ▸ 10/97 | 46472572 | **734235** | 270 757 | ALB |
| 1.2 i | 840/AA/AA1A | E | 1242 | 840A3.000 | M | + | TSW | 10/97 ▸ 08/00 | 71736189 | **734236** | 577 322 | ALM |
| VET3200924 ▸ | | | | | | | | | | | | |
| 1.2 i | 840/AA/AA1A | E | 1242 | 840A3.000 | M | + | TSW | 11/97 ▸ 08/00 | 46517926 | **734236** | 577 322 | ALM |
| 1.2 i 16V | 840AD1A | E | 1242 | 176B9.000 | M | + | TSW | 11/97 ▸ 08/00 | 46527489 | **734221** | 630 322 | ALM |
| 1.2 i | 840/AA/AA1A | E | 1242 | 840A3.000 | M | - | TSW | 11/95 ▸ 03/97 | 46414171 | **731375** | 496 322 | ALM |
| 1.2 i,1.2 i 16V | 840/AA/AA1A/AD1A | E | 1242 | 176B9.000,840A3.000 | M | - | TSW | 11/95 ▸ 08/00 | 46465021 | **731562** | 567 322 | ALM |
| 1.2 i | 840AA1AA | E | 1242 | 840A3.000 | A | + | TSW | 11/95 ▸ 08/00 | 7794871 | **731978** | 270 661 | CBS |
| 1.2 i | 840AA1AA | E | 1242 | 840A3.000 | A | - | TSW | 11/95 ▸ 08/00 | 46451997 | **731375** | 496 322 | ALM |
| 1.4 i | 840/AB1A/AC1A | E | 1370 | 840A2.000,840A4.000 | M | + | TSW | 11/95 ▸ 08/00 | 7785122 | **731980** | 270 757 | CBS |
| 1.4 i | 840/AB1A/AC1A | E | 1370 | 840A2.000,840A4.000 | M | - | TSW | 11/95 ▸ 08/00 | 46430837 | **731374** | 322 567 | ALM |

## Y IPSILON (2000>2003)

| | | | | | | | | | | | | |
|---|---|---|---|---|---|---|---|---|---|---|---|---|
| 1.2 i,1.2 i 16V | 840/AF1A/AG1A | E | 1242 | 188A4.000,188A5.000 | M | + | TSW | 09/00 ▸ 09/03 | 46763325 | **734238** | 630 322 | ALM |
| 1.2 i,1.2 i 16V | 840/AF1A/AG1A | E | 1242 | 188A4.000,188A5.000 | M | - | TSW | 09/00 ▸ 09/03 | 46763322 | **734237** | 577 322 | ALM |

## Y IPSILON (2003>)

| | | | | | | | | | | | | |
|---|---|---|---|---|---|---|---|---|---|---|---|---|
| 1.2 i 16V | 843AXB1A | E | 1242 | 188A5.000 | M | +/- | | 10/03 ▸ | 51706057 | **734363** | 580 316 | ALM |
| 1.2 i | 843AXA1A | E | 1242 | 188A4.000 | M | + | | 10/03 ▸ | 51706057 | **734363** | 580 316 | ALM |
| 1.2 i,1.2 i 16V | 843/AXA1A/AXB1A | E | 1242 | 188A4.000,188A5.000 | M | - | | 10/03 ▸ | 51737088 | | 580 316 | ALM |
| 1.4 i 16V | 843/AXC1A/AXC1B | E | 1368 | 843A1.000 | M | +/- | | 10/03 ▸ | 51706942 | **734362** | 580 305 | ALB |
| 1.4 i | 843AXG1A | E | 1368 | 350A1.000 | M | | | 01/06 ▸ | 51706942 | **734362** | 580 305 | ALB |
| 1.4 i 16V | 843AXC11 | E | 1368 | 843A1.000 | A | +/- | | 01/06 ▸ | 51706942 | **734362** | 580 305 | ALB |
| 1.3 MJTD 16V | 843/AXD1A/AXE1A | D | 1248 | 188A9.000,199A3.000 | M | +/- | | 10/03 ▸ | 46834067 | **734364** | 580 305 | ALB |
| 1.3 MJTD 16V | 843/AXE1A/AXF1A AXH1A | D | 1248 | 199A2.000,199A3.000 | M | | | 01/06 ▸ | 46834067 | **734364** | 580 305 | ALB |
| 1.3 MJTD 16V | 843AXD11 | D | 1248 | 188A9.000 | A | +/- | | 10/03 ▸ | 46834067 | **734364** | 580 305 | ALB |

## Y10

| | | | | | | | | | | | | |
|---|---|---|---|---|---|---|---|---|---|---|---|---|
| 1.0 | 156AA53W | E | 999 | 156A2.000 | M | +/- | TSW | 01/89 ▸ 09/92 | 46551216 | **811392** | 580 248 | ALM |
| 1.0,1.0 ie | 156/AA53A/AD53A AE53A | E | 999 | 156A2.000,156A2.100,156A2.246 | M | - | EXP, TSW | 01/89 ▸ 09/92 | 7711521 | **816707** | 519 248 | ALM |
| 1.0 ie | 156AE53W | E | 999 | 156A2.246 | M | - | TSW | 10/89 ▸ 09/92 | 46551216 | **811392** | 580 248 | ALM |
| 1.1 ie | 156/AG53A/AG53F AH53A/BG53A/BH53A/CG53A | E | 1108 | 156C.046,176B2.000 | M | + | EXP, TSW | 05/89 ▸ 10/95 | 7730497 | **816707** | 519 248 | ALM |
| 1.1 ie | 156/AC53W/AG53W | E | 1108 | 156C.000,156C.046 | M | - | TSW | 01/89 ▸ 09/92 | 46551216 | **811392** | 580 248 | ALM |
| 1.1 ie | 156/AC53A/AG53A AG53F/AH53A/AH53W/BG53A/BH53A/CG53A | E | 1108 | 156C.000,156C.046,176B2.000 | M | - | EXP, TSW | 01/89 ▸ 10/95 | 7711521 | **816707** | 519 248 | ALM |
| 1.1 ie | 156AH53W | E | 1108 | 176B2.000 | M | - | EXP, TSW | 01/95 ▸ 10/95 | 71735368 | **816707** | 519 248 | ALM |
| 1.1 ie | 156AG13A | E | 1108 | 156C.046 | A | + | EXP, TSW | 09/92 ▸ 12/94 | 7730497 | **816707** | 519 248 | ALM |
| 1.1 ie | 156/AC13A/AG13A AH13A | E | 1108 | 156C.000,156C.046,176B2.000 | A | - | EXP, TSW | 11/89 ▸ 10/95 | 7711521 | **816707** | 519 248 | ALM |
| 1.1 ie | 156AH13A | E | 1108 | 176B2.000 | A | - | EXP, TSW | 01/95 ▸ 10/95 | 71735368 | **816707** | 519 248 | ALM |
| 1.3 ie | 156AF53A | E | 1297 | 146A5.046 | M | +/- | | 09/92 ▸ 10/95 | 7755130 | | 519 232 | CBS |
| 1.3 ie | 156AF53A | E | 1297 | 146A5.046 | M | - | EXP, TSW | 01/89 ▸ 09/92 | 71735368 | **816707** | 519 248 | ALM |
| 1.3 ie | 156AF53A | E | 1297 | 146A5.046 | M | - | | 07/92 ▸ 09/92 | 7628800 | | 519 232 | CBS |
| 1.3 ie | 156AF53A | E | 1297 | 146A5.046 | M | | | 01/89 ▸ 09/92 | 7755130 | | 519 232 | CBS |
| 1.3 ie | 156AB53A | E | 1301 | 156B.000 | M | - | | 01/89 ▸ 09/92 | 7628800 | | 519 232 | CBS |
| 1.3 ie | 156AB53A | E | 1301 | 156B.000 | M | - | EXP, TSW | 01/89 ▸ 09/92 | 71735368 | **816707** | 519 248 | ALM |

## ZETA

| | | | | | | | | | | | | |
|---|---|---|---|---|---|---|---|---|---|---|---|---|
| 2.0 ie 16V | 220/AQ4/AQ5 | E | 1997 | EW10J4 | M | + | TSW | 01/01 ▸ 08/02 | 1475060080 | **731166** | 670 470 | ALM |
| 2.0 ie 16V | 220/AQ4/AQ5 | E | 1997 | EW10J4 | M | - | VCAP TSW | 01/01 ▸ 08/02 | 1485799080 | **731165** | 600 470 | ALM |
| 2.0 ie 16V | 220AQ4 | E | 1997 | EW10J4 | A | + | TSW | 01/01 ▸ 08/02 | 1475060080 | **731166** | 670 470 | ALM |
| 2.0 ie 16V | 220AQ4 | E | 1997 | EW10J4 | A | - | VCAP TSW | 01/01 ▸ 08/02 | 1485799080 | **731165** | 600 470 | ALM |
| 2.0 ie Turbo | 220/AD5/CD5 | E | 1998 | RGX | M | + | TSW | 10/94 ▸ 05/00 | 1475060080 | **731166** | 670 470 | ALM |
| 2.0 ie Turbo | 220AD5 | E | 1998 | RGX | M | + | TSW | 10/94 ▸ 11/96 | 1474401080 | **731166** | 670 470 | ALM |
| 2.0 ie 16V | 220AL5 | E | 1998 | RFV | M | + | TSW | 07/98 ▸ 12/00 | 1473910080 | **731166** | 670 470 | ALM |
| 2.0 ie Turbo | 220CD5 | E | 1998 | RGX | M | - | TSW | 12/96 ▸ 05/00 | 1474401080 | **731166** | 670 470 | ALM |
| 2.0 ie 16V | 220AL5 | E | 1998 | RFV | M | - | VCAP TSW | 07/98 ▸ 12/00 | 1485799080 | **731165** | 600 470 | ALM |
| 2.0 ie 16V | 220AL5 | E | 1998 | RFV | M | - | VCAP TSW | 07/98 ▸ 05/99 | 1471463080 | **731165** | 600 470 | ALM |
| ▸ 8211 | | | | | | | | | | | | |
| 2.0 JTD | 220AN5 | D | 1997 | DW10ATED | M | +/- | TSW | 01/00 ▸ 08/02 | 1482543080 | **732692** | 669 470 | ALB |
| 2.0 JTD 16V | 220AR500L | D | 1997 | DW10ATED4 | M | - | TSW | 01/00 ▸ 08/02 | 1475845080 | **731168** | 670 470 | ALM |
| 2.1 TD | 220AJ5 | D | 2088 | P8C | M | + | TSW | 03/96 ▸ 12/00 | 1475845080 | **731168** | 670 470 | ALM |

Radiator Radiateur Motorkühler Radiatore di raffreddamento Radiator Radyatör Radiador Радиатор vízhűtő Vodní chladič Radiator Ψυγείο



• **New** Nouveau **Nuevo** Novo **Nuovo** Nieuw **Neu** Nowość **Yeni** Новый Νέο **Novy**

| Type Ctr. | | CC | | AC | | | OE | Valeo | DIM. | TECH |
|---|---|---|---|---|---|---|---|---|---|---|
| **LANCIA (.../...)** | | | | | | | | | | |
| **ZETA (.../...)** | | | | | | | | | | |
| 2.1 TD 220AJ5 | D | 2088 | P8C | M | - | TSW | 03/96 ▸ 12/00 | 1475844080 | **731168** | 670 470 | ALM |
| **LAND ROVER** | | | | | | | | | | |
| **DEFENDER 90 - 110** | | | | | | | | | | |
| 2.5 LDH/AD7/AD8/HD7/HD8/MD7/MD8 ; LDV/AD7/AD8 BD7/BD8 | E | 2494 | 17H | M | | | 10/90 ▸ 02/94 | ESR77 | | 640 420 | CBS |
| 2.5 D LDH/AC7/AC8/HC7/HC8/MC7/MC8 ; LDV/AC7/AC8 BC7/BC8 | D | 2495 | 12J | M | | | 10/90 ▸ 02/94 | ESR77 | | 640 420 | CBS |
| **DISCOVERY (89>94)** | | | | | | | | | | |
| 3.9 i V8 LGJ/BM7/BM8/MM7/MM8 TA163100, TA501920 ▸ | E | 3947 | 36D | M | | | 09/93 ▸ 03/94 | ESR3688 | | 697 385 | CBS |
| 3.9 i V8 LGJ/BM7/BM8/MM7/MM8 ▸ TA163099, TA501919 | E | 3947 | 36D | M | | | 09/93 ▸ 03/94 | ESR2634 | | 697 385 | CBS |
| 2.5 TDi LJG/BF7/BF8/MF7/MF8 MA096448 ▸ | D | 2495 | 17L | M | | +Rad AUX | > ▸ 03/94 | ESR3275 | **731491** | 415 405 | CBS |
| 2.5 TDi LJG/BF7/BF8/MF7/MF8 | D | 2495 | 17L | M | | | 09/89 ▸ 03/94 | BTP2275 | | | |
| 2.5 TDi LJG/BF7/BF8/MF7/MF8 | D | 2495 | 12L | M | | | 09/89 ▸ 03/94 | BTP1823 | **731406** | 420 385 | CBS |
| 2.5 TDi LJG/BF3/BF4/MF3/MF4 MA096448 ▸ | D | 2495 | 19L | A | | +Rad AUX | > ▸ 03/94 | ESR3275 | **731491** | 415 405 | CBS |
| 2.5 TDi LJG/BF3/BF4/MF3/MF4 | D | 2495 | 19L | A | | | 10/92 ▸ 03/94 | BTP2275 | | | |
| 2.5 TDi LJG/BF7/BF8/MF7/MF8 ▸ MA096447 | D | 2495 | 17L | M | | | 09/89 ▸ | ESR2592 | | | |
| 2.5 TDi LJG/BF3/BF4/MF3/MF4 | D | 2495 | 19L | A | | | 10/92 ▸ | ESR2592 | | | |
| **FREELANDER (97>2003)** | | | | | | | | | | |
| 1.8 i 16V LNA/AA7/AA8/BA7/BA8 | E | 1796 | 18K4FK | M | | | 10/97 ▸ | ESR4197 | **732399** | 615 417 | ALB |
| 2.5 i V6 LNA/A.7/A.8/B.7/B.8 | E | 2497 | 25K6 | A | | | 03/00 ▸ 09/03 | PCC000320 | | 612 450 | ALB |
| 2.0 Td4 LNA/A.7/A.8/B.7/B.8 | D | 1951 | M47 | M | | | 09/00 ▸ 09/03 | PCC000320 | | 612 450 | ALB |
| 2.0 Td4 LNA/A.7/AE2/B.7/B.8 | D | 1951 | M47 | A | | | 09/00 ▸ 09/03 | PCC000320 | | 612 450 | ALB |
| 2.0 D LNA/AB7/AB8/BB7/BB8 | D | 1994 | 20L4D | M | | | 10/97 ▸ 09/00 | ESR4199 | **732400** | 485 420 | ALB |
| **FREELANDER 2 (2006>)** | | | | | | | | | | |
| 3.2 i V6 24V | E | 3192 | I6 | A | + | | 2007 ▸ | LR006715 | •**735600** | 670 472 | ALB |
| 2.2 SD4 190 16V,2.2 TD4 150 16V | D | 2179 | DW12 | A | + | | 2007 ▸ | LR006715 | •**735600** | 670 472 | ALB |
| **LAND 90 SERIES I - II - III** | | | | | | | | | | |
| 2.5 LDV/AD7/AD8/BD7/BD8 | E | 2494 | 17H | M | | TSW | 09/85 ▸ 09/90 | NRC6889 | **731235** | 660 424 | CBS |
| 3.5 V8 LDV/AV7/AV8/BV7/BV8 | E | 3528 | 15G | M | | TSW | 06/84 ▸ 09/90 | NRC6889 | **731235** | 660 424 | CBS |
| 2.5 TD LDV/AB7/AB8/BB7/BB8 ▸ EA357719 | D | 2494 | 19J | M | | TSW | 09/86 ▸ | NTC4839 | | 635 360 | CBS |
| 2.5 D LDV/AC7/AC8/BC7/BC8 | D | 2495 | 12J | M | | TSW | 07/84 ▸ 09/90 | NRC6889 | **731235** | 660 424 | CBS |
| **LAND 110 SERIES I - II - III** | | | | | | | | | | |
| 2.5 LDHMD8 FA389981 ▸ | E | 2494 | 17H | M | | | 09/86 ▸ 12/86 | ESR77 | | 640 420 | CBS |
| 3.5 V8 LDH/AV1/AV2/AV7/AV8 HV1/HV2/HV7/HV8/MV1/MV2/MV3/MV4 | E | 3528 | 15G | M | + | TSW | 10/83 ▸ 08/86 | NRC6889 | **731235** | 660 424 | CBS |
| 3.5 V8 LDH/AV1/AV2/AV7/AV8 HV1/HV2/HV7/HV8/MV1/MV2/MV3/MV4 ▸ FA418928 | E | 3528 | 15G | M | | TSW | 09/86 ▸ | ESR76 | **731235** | 660 424 | CBS |
| 3.5 V8 LDH/AV1/AV2/AV7/AV8 HV1/HV2/HV7/HV8/MV1/MV2/MV3/MV4 FA429128 ▸ JA922098 | E | 3528 | 15G | M | | | > ▸ | ESR204 | **734734** | 630 400 | CBS |
| 2.3 D LDH/AG7/AG8/HG7/HG8/MG7/MG8 | D | 2286 | 10J | M | + | TSW | 10/83 ▸ 1987 | NRC6889 | **731235** | 660 424 | CBS |
| 2.5 D LDH/AC7/AC8/HC7/HC8/MC7/MC8 | D | 2495 | 12J | M | + | TSW | 07/84 ▸ 08/86 | NRC6889 | **731235** | 660 424 | CBS |
| 2.5 D LDH/AC7/AC8/HC7/HC8/MC7/MC8 | D | 2495 | 12J | M | | | > ▸ 09/90 | ESR77 | | 640 420 | CBS |
| **RANGE ROVER (70>94)** | | | | | | | | | | |
| 3.5 V8 LHA/AV4/AV7/BV7/BV8 MV7/MV8 | E | 3528 | 11D | M | | | 07/81 ▸ 09/86 | 575971 | | 692 355 | CBS |
| 3.5 V8 LHA/AV3/AV4/BV3/BV4 | E | 3528 | 11D | A | | | 07/81 ▸ 09/86 | 575971 | | 692 355 | CBS |
| 3.5 i V8 LHA/BL7/BL8/ML7/ML8 | E | 3532 | 24D | M | | | 08/86 ▸ 10/89 | NTC6120 | | 740 420 | CBS |
| 3.5 V8,3.5 i V8 LHA/BL3/BL4/ML3/ML4 MV4/MV8 | E | 3532 | 25D,29D | A | | | 09/86 ▸ 10/89 | NTC6120 | | 740 420 | CBS |
| 3.9 i V8 LHA/BM3/BM4/MM4 ▸ JA624755 | E | 3947 | 36D | A | | | 10/89 ▸ 09/93 | ESR74 | | 697 385 | CBS |
| 3.9 i V8 16V LHA/BM8/MM8 | E | 3950 | 35D | M | | | 10/89 ▸ 09/94 | ESR75 | | 697 385 | CBS |

| | | | CC | | AC | | | OE | Valeo | DIM. | TECH |
|---|---|---|---|---|---|---|---|---|---|---|---|
| **LAND ROVER** (.../...) | | | | | | | | | | | |
| **RANGE ROVER (70>94) (.../...)** | | | | | | | | | | | |
| 4.2 i V8 ▸ JA624755 | LHB/M33/M34 | E | 4278 | 40D | A | | | 10/92 ▸ 09/93 | ESR74 | 697 385 | CBS |
| 2.4 TD FA361897 ▸ | LHA/AE7/AE8/BE7/BE8 ME7/ME8 | D | 2393 | HR492H1 | M | | | > ▸ 09/89 | BTP1742 | | |
| 2.5 TDi | LHA/AF7/AF8/BF7/BF8 MF7/MF8 | D | 2495 | 14L | M | | | 11/92 ▸ 09/94 | BTP1823 | **731406** 420 385 | CBS |
| 2.5 TD | LHA/AN7/AN8/BN7/BN8 MN7/MN8 | D | 2500 | 95A | M | | | 10/89 ▸ 10/92 | BTP1831 | 435 385 | CBS |
| **RANGE ROVER (94>2002)** | | | | | | | | | | | |
| 4.0 V8 | LPA/MM7/MM8 | E | 3947 | 42D | M | | | 09/94 ▸ | ESR2269 | **732402** 495 560 | ALB |
| 4.0 V8 | LPA/MM3/MM4 | E | 3947 | 42D | A | | | 09/94 ▸ | ESR2269 | **732402** 495 560 | ALB |
| 4.6 V8 | LPA/MJ7/MJ8 | E | 4552 | 46D | M | | | 09/94 ▸ | ESR2269 | **732402** 495 560 | ALB |
| 4.6 V8 | LPA/MJ3/MJ4 | E | 4552 | 46D | A | | | 09/94 ▸ | ESR2269 | **732402** 495 560 | ALB |
| 2.5 TD | LPA/MW7/MW8 | D | 2497 | 25/6TM | M | | | 09/94 ▸ | ESR2270 | 485 562 | ALB |
| 2.5 TD | LPA/MW3/MW4 | D | 2497 | 25/6TM | A | | | 10/95 ▸ | ESR2502 | | |
| **RANGE ROVER EVOQUE** | | | | | | | | | | | |
| 2.0 Si4 240 24V | VA1BG0 ; VA2BG2 | E | 1999 | 2.0L-LRE | A | +/- | | 03/11 ▸ | LR006715 | •**735600** 670 472 | ALB |
| 2.2 SD4 190 24V<br>2.2 TD4 150 24V | VA1/BEX ; VA2/BC2<br>BE7 | D | 2179 | DW12 | A | +/- | | 03/11 ▸ | LR006715 | •**735600** 670 472 | ALB |
| **LEXUS** | | | | | | | | | | | |
| **GS 300 (97>2004)** | | | | | | | | | | | |
| 3.0 i 24V | JZS16 | E | 2997 | 2JZ-GE-219,2JZ-GE-221 | A | | | 09/97 ▸ 12/00 | 1640046570 | | |
| **IS I (99>2005)** | | | | | | | | | | | |
| 2.0 i 24V | GXE10 | E | 1988 | 1G-FE | M | | | 03/99 ▸ 07/05 | 1640070630 | •**734498** 718 375 | |
| 2.0 i 24V | GXE10 | E | 1988 | 1G-FE | A | | | 03/99 ▸ 07/05 | 1640070620 | •**734499** 718 375 | ALB |
| **RX 400** | | | | | | | | | | | |
| 3.3 i V6 24V | MHU38 | E | 3311 | 3MZFE | A | | | 03/05 ▸ 12/08 | 1604120352 | •**735571** 675 472 | ALB |
| **MAZDA** | | | | | | | | | | | |
| **2 (2003>2005)** | | | | | | | | | | | |
| 1.25 i 16V | | E | 1242 | DHC | M | | | 03/03 ▸ 08/05 | C20115200 | **734273** 500 356 | ALB |
| 1.4 i 16V | | E | 1388 | ZH14 | M | | | 03/03 ▸ 08/05 | C20115200 | **734273** 500 356 | ALB |
| 1.6 i 16V | | E | 1596 | DURA16 | M | | | 03/03 ▸ 08/05 | C20115200 | **734273** 500 356 | ALB |
| 1.4 MZ-CD | DD63EM | D | 1399 | MZ14CD | M | | | 03/03 ▸ 08/05 | Y40115200 | **734274** 508 377,5 | ALB |
| **2 (2005>2006)** | | | | | | | | | | | |
| 1.25 i 16V | NB2WPJ | E | 1242 | DHC | M | | | 09/05 ▸ 01/08 | C40115200 | **734273** 500 356 | ALB |
| 1.4 i 16V | NC/2WPJ/AWPJ | E | 1388 | ZH14 | M | | | 09/05 ▸ 01/08 | C40115200 | **734273** 500 356 | ALB |
| 1.6 i 16V | ND2WPJ | E | 1596 | DURA16 | M | | | 09/05 ▸ 01/08 | C40115200 | **734273** 500 356 | ALB |
| 1.4 MZ-CD | NEAWPJ | D | 1399 | MZ14CD | M | | | 09/05 ▸ 01/08 | Y40215200 | **734274** 508 377,5 | ALB |
| **2 (2007>)** | | | | | | | | | | | |
| 1.3 i 16V | DE/14J2/14K2 | E | 1348 | MZR13 HP,MZR13 SP | M | +/- | | 06/07 ▸ | ZJ3815200A | •**735416** 350 555 | ALB |
| 1.5 MZR,1.5 MZR 16V | DE/1352/1452 | E | 1498 | MZR15 | M | +/- | | 06/07 ▸ | ZJ3815200A | •**735416** 350 555 | ALB |
| **3 (2003>2006)** | | | | | | | | | | | |
| 1.4 i 16V | BK/12J2/14J2 | E | 1349 | MZR14 | M | | | 06/03 ▸ 02/06 | Z60215200C | **734320** 670 377,5 | ALB |
| 1.6 i 16V | BK/12Z2/14Z2 | E | 1598 | MZR16 | M | | | 06/03 ▸ 02/06 | Z60215200C | **734320** 670 377,5 | ALB |
| 1.6 i 16V | BK14Z5 | E | 1598 | MZR16 | A | | | 06/03 ▸ 02/06 | Z60215200C | **734320** 670 377,5 | ALB |
| 2.0 i 16V | BK/12F2/14F2 | E | 1999 | MZR20 | M | | | 06/03 ▸ 02/06 | Z60215200C | **734320** 670 377,5 | ALB |
| 1.6 DE 16V | BK/1232/12Y2/1432 1462/14Y2 | D | 1560 | MZ-CD16,MZ16CD,MZ16CD/FAP | M | | | 06/03 ▸ 02/06 | Y60115200E | **734321** 670 377,5 | ALB |
| 1.6 DE 16V | BK/1232/12Y2/1432 14Y2 | D | 1560 | MZ16CD,MZ16CD/FAP | M | | | 11/03 ▸ | Y60115200B | **734321** 670 377,5 | ALB |
| **MAZDA 3 (FL) (2006>)** | | | | | | | | | | | |
| 1.4 i 16V | BK14J2 | E | 1349 | MZR14 | M | | | 03/06 ▸ 12/08 | Z60315200 | **734320** 670 377,5 | ALB |
| 1.6 i 16V | BK/12Z2/14Z2 | E | 1598 | MZR16 | M | | | 03/06 ▸ 12/08 | Z60315200 | **734320** 670 377,5 | ALB |
| 1.6 i 16V | BK/12Z5/14Z5 | E | 1598 | MZR16 | A | | | 03/06 ▸ 12/08 | Z60315200 | **734320** 670 377,5 | ALB |
| 2.0 i 16V | BK/12F6/14F6 | E | 1999 | MZR20 | M | | | 03/06 ▸ 12/08 | Z60215200C | **734320** 670 377,5 | ALB |





• **New** Nouveau **Nuevo** Novo **Nuovo** Nieuw **Neu** Nowość **Yeni** Новый Νέο **Nový**

## MAZDA 3 (FL) (2006>) (.../...)

| | | | | | | | | | | | | |
|---|---|---|---|---|---|---|---|---|---|---|---|---|
| 1.6 MZ-CD 16V | BK/12Y2/1462/14Y2 | D | 1560 | MZ-CD16,MZ16CD/FAP | M | | | 03/06 ▸ 12/08 | Y60115200E | 734321 | 670 377,5 | ALB |

## 5 (2005>2006)

| | | | | | | | | | | | | |
|---|---|---|---|---|---|---|---|---|---|---|---|---|
| 1.8 i 16V | CR1982 | E | 1798 | MZR18 | M | | | 02/05 ▸ 12/07 | LFB715200A | 734320 | 670 377,5 | ALB |
| 2.0 i 16V | CR19F6 | E | 1999 | MZR20 | M | | | 02/05 ▸ 12/07 | LFB715200A | 734320 | 670 377,5 | ALB |
| 2.0 CD 16V | CR/19R6/19T6 | D | 1998 | MZR-CD20 | M | | | 02/05 ▸ 12/07 | RF7N15200 | 734320 | 670 377,5 | ALB |

## 5 (2007>)

| | | | | | | | | | | | | |
|---|---|---|---|---|---|---|---|---|---|---|---|---|
| 1.8 i 16V | CR1982 | E | 1798 | MZR18 | M | | | 09/07 ▸ | LFB715200A | 734320 | 670 377,5 | ALB |
| 2.0 i 16V | CR19F6 | E | 1999 | MZR20 | M | | | 09/07 ▸ | LFB715200A | 734320 | 670 377,5 | ALB |
| 2.0 i 16V | CR19F7 | E | 1999 | MZR20 | A | | | 09/07 ▸ | LFB715200A | 734320 | 670 377,5 | ALB |
| 2.0 CD 16V | CR/19R6/19T6 | D | 1998 | MZR-CD20 | M | | | 09/07 ▸ | RF7N15200 | 734320 | 670 377,5 | ALB |

## 6 (2002>2005)

| | | | | | | | | | | | | |
|---|---|---|---|---|---|---|---|---|---|---|---|---|
| 1.8 i 16V | GY1982 ; GG/1282 1482 | E | 1798 | MZR18 | M | | | 06/02 ▸ 02/05 | LF1715200 | 735053 | 375 702 | ALB |
| 1.8 i 16V | GY1982 ; GG/1282 1482 | E | 1798 | MZR18 | M | | | 06/02 ▸ 02/05 | L32715200 | 734484 | 375 753 | ALB |
| 2.0 i 16V | GY19F6 ; GG/12F6 14F2 | E | 1999 | MZR20 | M | | | 06/02 ▸ 02/05 | L32715200 | 734484 | 375 753 | ALB |
| 2.0 i 16V | GY19F6 ; GG/12F6 14F2 | E | 1999 | MZR20 | M | | | 06/02 ▸ 02/05 | LF1715200 | 735053 | 375 702 | ALB |
| 2.0 i 16V | GY19F6 ; GG/12F5 14F5 | E | 1999 | MZR20 | A | | | 06/02 ▸ 02/05 | LF2115200 | 734483 | 375 702 | ALB |
| 2.3 i 16V | GY1936 | E | 2261 | L3 | M | | | 06/02 ▸ 02/05 | L32715200 | 734484 | 375 753 | ALB |
| 2.0 DiTD,2.0 DiTD 16V | GG/12R6/12T2/14R6 14T6 ; GY/19R2/19T2 | D | 1998 | MZR-CD20,RF-136 | M | | | 06/02 ▸ 08/03 | RF5C15200 | 734410 | 375 735 | ALB |

## 121 (DA) (88>90)

| | | | | | | | | | | | | |
|---|---|---|---|---|---|---|---|---|---|---|---|---|
| 1100 | DA/1321/1322/13B2 | E | 1139 | B1-15,B1-16 | M | | TSW 820235 | 01/88 ▸ 10/90 | B10215200 | 731042 | 322 385 | CBS |
| 1300 | DA1332 | E | 1324 | B3-A5 | M | | TSW 820235 | 01/88 ▸ 10/90 | B10215200 | 731042 | 322 385 | CBS |

## 121 (DB) (90>96)

| | | | | | | | | | | | | |
|---|---|---|---|---|---|---|---|---|---|---|---|---|
| 1.1 | DB12A2 | E | 1139 | B1-21 | M | | TSW 820824 | 11/90 ▸ 10/93 | B3C715200C | 731036 | 350 550 | CBS |
| 1.3,1.3 i | DB/12B2/12C2/12D2 | E | 1324 | B3-C9,B3-D1,B3-D2 | M | | TSW 820824 | 08/92 ▸ 02/96 | B3C715200D | 731036 | 350 550 | CBS |
| 1.3,1.3 i | DB/12C5/12D5 | E | 1324 | B3-D3 | A | | TSW 820824 | 08/92 ▸ 02/96 | B3C815200F | 734121 | 350 638 | ALB |

## 121 (JA/JB) (96>)

| | | | | | | | | | | | | |
|---|---|---|---|---|---|---|---|---|---|---|---|---|
| 1.2 | JATA ; JBTA | E | 1242 | DHA | M | + | TSW | 03/96 ▸ | 1E0515200 | 731736 | 525 377,5 | ALM |
| 1.2 | JATA ; JBTA | E | 1242 | DHA | M | + | TSW | 03/96 ▸ 01/02 | 1E0515200A | 731736 | 525 377,5 | ALM |
| 1.2 | JATA ; JBTA | E | 1242 | DHA | M | - | TSW | 03/96 ▸ 01/02 | 1E1015200B | 731735 | 530 285 | ALM |
| 1.2 | JATA ; JBTA | E | 1242 | DHA | M | - | TSW | 03/96 ▸ | 1E1015200 | 731735 | 530 285 | ALM |
| 1.2 | JATA ; JBTA | E | 1242 | DHA | M | - | | 03/96 ▸ | 1E1015200A | | 530 285 | ALM |
| 1.2 | JATA ; JBTA | E | 1242 | DHA | A | | | 03/96 ▸ 01/02 | 1E0615200 | | 500 360 | CBS |
| 1.3 | JA/SMJ4/TA ; JB/SMJ4/TA | E | 1299 | J4C,JJA | M | + | | 03/96 ▸ 01/02 | 1E0315200A | 731617 | 500 359 | ALM |
| 1.3 | JA/SMJ4/TA ; JB/SMJ4/TA | E | 1299 | J4C,JJA | M | + | | 03/96 ▸ | 1E0315200 | 731617 | 500 359 | ALM |
| 1.3 | JA/SMJ4/TA ; JB/SMJ4/TA | E | 1299 | J4C,JJA | M | - | | 03/96 ▸ 01/02 | 1E0415200 | 731734 | 500 303 | ALM |
| 1.8 D | JASMRT ; JBSMRT | D | 1753 | RTK | M | +/- | TSW | 03/96 ▸ 03/00 | 1E1615200A | 732003 | 525 377,5 | ALM |
| 1.8 D | JASMRT ; JBSMRT | D | 1753 | RTK | M | + | TSW | 03/96 ▸ 03/00 | 1E1615200 | 732003 | 525 377,5 | ALM |
| 1.8 D | JASMRT ; JBSMRT | D | 1753 | RTK | M | + | TSW | 03/96 ▸ | 1E0715200 | 732003 | 525 377,5 | ALM |
| 1.8 D | JASMRT ; JBSMRT | D | 1753 | RTK | M | - | TSW | 03/96 ▸ | 1E1215200 | 732003 | 525 377,5 | ALM |

## 323 (BD) (80>85)

| | | | | | | | | | | | | |
|---|---|---|---|---|---|---|---|---|---|---|---|---|
| 1.1 | BD/1011/1211/1301/1311/1411 | E | 1071 | E1 | M | | | 08/80 ▸ 08/84 | E30315200 | | 302 468 | CBS |
| 1.3 | BD/1031/1221/1222/1231/1232/1321/1322/1331 1332/1421/1422/1431/1432 | E | 1296 | E3 | M | | | 08/80 ▸ 08/84 | E30315200 | | 302 468 | CBS |

## 323 (BF) (85>89)

| | | | | | | | | | | | | |
|---|---|---|---|---|---|---|---|---|---|---|---|---|
| 1.1 | BF/1231/1331/1431 | E | 1071 | E1 | M | | TSW | 01/85 ▸ 1987 | E35615200A | 730436 | 302 457 | CBS |
| 1.3 | BF/1251/1252/1451/1452 | E | 1296 | E3 | M | | TSW | 01/85 ▸ 1987 | E35815200B | 730436 | 302 457 | CBS |
| 1.3 | BF/1353/1453 | E | 1296 | E3 | A | | TSW | 01/85 ▸ 1987 | B31615200 | 730437 | 352 574 | CBS |
| 1.3 | BF/12B2/13B2/14B2 | E | 1324 | B3-84 | M | | TSW | 09/87 ▸ 1989 | E5D915200B | 730436 | 302 457 | CBS |
| 1.3 | BF14B3 | E | 1324 | B3-84 | A | | TSW | 09/87 ▸ 1989 | B31615200 | 730437 | 352 574 | CBS |
| 1.5 | BF/1261/1262/1462 | E | 1490 | E5 | M | | TSW | 01/85 ▸ 1987 | E35815200B | 730436 | 302 457 | CBS |
| 1.5 | BF/12C2/14C2 | E | 1498 | B5 | M | | TSW | 09/87 ▸ 1989 | E35815200B | 730436 | 302 457 | CBS |
| 1.5 | BF13C2 | E | 1498 | B5 | A | | TSW | 09/87 ▸ 1989 | B31615200 | 730437 | 352 574 | CBS |
| 1.6,1.6 i Turbo | BF/1282/1382/8312 | E | 1598 | B6,B6T | M | | TSW | 07/85 ▸ 1989 | B63115200A | 731142 | 352 574 | CBS |

## 323 (BG) (89>94)

| | | | | | | | | | | | | |
|---|---|---|---|---|---|---|---|---|---|---|---|---|
| 1.3 | BG/1222/12C2/1322/13C2 | E | 1324 | B3-84,B3-86 | M | | TSW 820824 | 06/89 ▸ 05/94 | B61S15200C | 731461 | 388 563 | ALB |

# MAZDA (.../...)

## 323 (BG) (89>94) (.../...)

| | | | CC | | | AC | | | OE | Valeo | DIM. | TECH |
|---|---|---|---|---|---|---|---|---|---|---|---|---|
| 1.3 | BG/1223/12B3/1323/13B3 | E | 1324 | B3-84,B3-85,B3-87 | A | | | 06/89 ▸ 05/94 | B61L15200D | | 392 646 | CBS |
| 1.6 | BG/12E2/1442/14E2 | E | 1598 | B6,B6I | M | | TSW 820824 | 06/89 ▸ 05/94 | BP2815200B | **732326** | 352 646 | CBS |
| 1.6 | BG1442 | E | 1598 | B6 | M | | TSW 820824 | 06/89 ▸ | B63F15200C | **731072** | 360 643 | CBS |
| 1.6 | BG1442 | E | 1598 | B6 | M | | TSW 820824 | 06/89 ▸ 05/94 | B63F15200D | **731072** | 360 643 | CBS |
| 1.6 | BG/1242/1342/13E2 | E | 1598 | B6,B6I | M | | TSW 820824 | 06/89 ▸ 05/94 | B61S15200C | **731461** | 388 563 | ALB |
| 1.6 | BG/1443/14E5 | E | 1598 | B6,B6I | A | | TSW 820824 | 1989 ▸ | B54715200A | **732475** | 352 646 | CBS |
| ▸ 131680 | | | | | | | | | | | | |
| 1.8,1.8 i | BG/1472/14G2 | E | 1840 | BP,MAZDA01 | M | | TSW 820824 | 06/89 ▸ 05/94 | BP2815200B | **732326** | 352 646 | CBS |
| 1.8,1.8 i | BG/1372/13G2 | E | 1840 | BP,MAZDA01 | M | | TSW 820824 | 06/89 ▸ 05/94 | B61S15200C | **731461** | 388 563 | ALB |
| 1.8 i Turbo | BG/8362/83H2 | E | 1840 | BPT | M | | | 09/90 ▸ 05/94 | BP2615200D | | 390 675 | CBS |
| 1.8 i | BG83J2 | E | 1840 | BP-TH | M | | TSW 820824 | 03/91 ▸ 05/94 | B6S715200D | **732325** | 392 646 | CBS |

## 323 (BA) (94>96)

| | | | | | | | | | | | | |
|---|---|---|---|---|---|---|---|---|---|---|---|---|
| 1.3 i | BA/1232/1332 | E | 1324 | B3-C9 | M | +/- | | 06/94 ▸ 09/96 | B6BF15200G | **734120** | 325 678 | ALB |
| 1.5 i | BA/1252/1352/1452 | E | 1489 | Z5 | M | +/- | | 06/94 ▸ 09/96 | B6BF15200G | **734120** | 325 678 | ALB |
| 1.5 i | BA/1255/1355 | E | 1489 | Z5 | A | +/- | | 08/95 ▸ 09/96 | B59615200D | **732345** | 325 688 | ALB |
| 1.8 i 16V | BA/12P2/13P2/14P2 | E | 1840 | BP-ZE | M | +/- | | 08/94 ▸ 09/96 | BPD315200H | **734120** | 325 678 | ALB |
| 1.8 i 16V | BA/12P5/13P5 | E | 1840 | BP-ZE | A | + | | 08/94 ▸ 07/95 | BPM715200 | **735236** | 326 684 | ALB |
| 1.8 i 16V | BA/12P5/13P5/14P5 | E | 1840 | BP-ZE | A | + | | 08/95 ▸ 09/96 | BPE715200 | **732346** | 325 688 | ALB |
| 1.8 i 16V | BA/12P5/13P5 | E | 1840 | BP-ZE | A | - | | 08/94 ▸ 07/95 | BPG215200 | **735236** | 326 684 | ALB |
| 1.7 TD | BA1272 | D | 1686 | 4EE1 | M | + | | 08/95 ▸ 09/96 | B6FN15200 | **732345** | 325 688 | ALB |

## 323 (BA) (96>98)

| | | | | | | | | | | | | |
|---|---|---|---|---|---|---|---|---|---|---|---|---|
| 1.3 i 16V | BA/1232/1532 | E | 1324 | B3-ME | M | | | 10/96 ▸ 06/98 | B6BF15200G | **734120** | 325 678 | ALB |
| 1.5 i 16V | BA1252 | E | 1489 | Z5-DE | M | +/- | | 10/96 ▸ 06/98 | BPG215200 | **735236** | 326 684 | ALB |
| ▸ 559262 | | | | | | | | | | | | |
| 1.5 i 16V | BA1252 | E | 1489 | Z5-DE | M | + | | 10/96 ▸ 06/98 | B59615200D | **732345** | 325 688 | ALB |
| ▸ 559262 | | | | | | | | | | | | |
| 1.5 i 16V | BA/1352/1552 | E | 1489 | Z5-DE | M | - | | 10/96 ▸ | B6BF15200G | **734120** | 325 678 | ALB |
| 1.5 i 16V | BA/1255/1355/1555 | E | 1489 | Z5-DE | A | +/- | | 10/96 ▸ 06/98 | BPG215200 | **735236** | 326 684 | ALB |
| ▸ 559262 | | | | | | | | | | | | |
| 1.5 i 16V | BA1255 | E | 1489 | Z5-DE | A | | | 10/96 ▸ 06/98 | B6BF15200G | **734120** | 325 678 | ALB |
| ▸ 559262 | | | | | | | | | | | | |
| 1.5 i 16V | BA/1255/1355/1555 | E | 1489 | Z5-DE | A | + | | 10/96 ▸ | B59615200D | **732345** | 325 688 | ALB |
| ▸ 559262 | | | | | | | | | | | | |
| 1.6 i | BA1262 | E | 1598 | B6-DA | M | +/- | | 02/97 ▸ 06/98 | BPG215200 | **735236** | 326 684 | ALB |
| 1.6 i | BA1265 | E | 1598 | B6-DA | A | +/- | | 02/97 ▸ 06/98 | BPM715200 | **735236** | 326 684 | ALB |
| 1.8 i 16V | BA12P2 | E | 1840 | BP-ZE | M | +/- | | 10/96 ▸ 06/98 | BPG215200 | **735236** | 326 684 | ALB |
| 1.8 i 16V | BA/12P2/13P2 | E | 1840 | BP-ZE | M | | | 10/96 ▸ 06/98 | B6BF15200G | **734120** | 325 678 | ALB |
| 1.8 i 16V | BA/12P2/13P2 | E | 1840 | BP-ZE | M | | | 10/96 ▸ 06/98 | B6FN15200 | **732345** | 325 688 | ALB |
| 1.8 i 16V | BA12P5 | E | 1840 | BP-ZE | A | +/- | | 10/96 ▸ 06/98 | BPM715200 | **735236** | 326 684 | ALB |
| 1.8 i 16V | BA12P5 | E | 1840 | BP-ZE | A | + | | 10/96 ▸ 06/98 | B6FN15200 | **732345** | 325 688 | ALB |
| 1.8 i 16V | BA13P5 | E | 1840 | BP-ZE | A | +/- | | 10/96 ▸ 06/98 | BPE715200 | **732346** | 325 688 | ALB |
| 1.8 i 16V | BA/12P5/13P5 | E | 1840 | BP-ZE | A | | | 10/96 ▸ 06/98 | B6BF15200G | **734120** | 325 678 | ALB |
| 2.0 D | BA/1242/1542 | D | 1998 | RF-1G | M | - | | 03/97 ▸ 06/98 | B6FN15200 | **732345** | 325 688 | ALB |

## 323 (BJ) (98>2000)

| | | | | | | | | | | | | |
|---|---|---|---|---|---|---|---|---|---|---|---|---|
| 1.3 i 16V | BJ1432 | E | 1324 | B3-BJ | M | | | 08/98 ▸ 09/00 | ZL0115200A | **734123** | 325 678 | ALB |
| 1.3 i 16V | BJ//1432 | E | 1324 | B3-BJ | M | | | 08/98 ▸ 09/00 | ZL0115200C | **734123** | 325 678 | ALB |
| 1.5 i 16V | BJ12L2 | E | 1498 | ZL | M | | | 08/98 ▸ 09/00 | ZL0215200 | **734124** | 325 702 | ALB |
| 1.5 i 16V | BJ14L2 | E | 1498 | ZL | M | | | 08/98 ▸ 09/00 | ZL0515200B | **734123** | 325 678 | ALB |
| 1.5 i 16V | BJ/12L5/14L5 | E | 1498 | ZL | A | | | 08/98 ▸ 09/00 | ZL0215200 | **734124** | 325 702 | ALB |
| 1.8 i 16V | BJ14P2 | E | 1840 | FP-18 | M | | | 08/98 ▸ 09/00 | ZL0115200C | **734123** | 325 678 | ALB |
| 1.8 i 16V | BJ14P5 | E | 1840 | FP-18 | A | | | 08/98 ▸ 09/00 | ZL0215200 | **734124** | 325 702 | ALB |
| 2.0 Di | BJ14F2 | D | 1998 | RF-ID | M | + | | 08/98 ▸ 09/00 | RF1S15200B | **734122** | 350 678 | ALB |
| 2.0 Di | BJ14F2 | D | 1998 | RF-ID | M | - | | 08/98 ▸ 09/00 | RF2L15200B | **734122** | 350 678 | ALB |

## 323 (BJ) (2000>2003)

| | | | | | | | | | | | | |
|---|---|---|---|---|---|---|---|---|---|---|---|---|
| 1.6 i 16V | BJ/12M5/13M5 | E | 1598 | ZM-3 | A | +/- | | 10/00 ▸ 10/03 | FS7P15200B | **735240** | 327 686 | ALB |

## 323 WAGON (BW) (86>93)

| | | | | | | | | | | | | |
|---|---|---|---|---|---|---|---|---|---|---|---|---|
| 1.5 | BW1263 | E | 1490 | E5-J9 | A | | | 01/86 ▸ 12/87 | B63415200A | | 352 594 | CBS |
| 1.5 | BW/12C2/12J2 | E | 1498 | B5-05,B5-05C | M | | TSW | 09/89 ▸ 08/93 | E36015200A | **730436** | 302 457 | CBS |
| 1.5 | BW12J5 | E | 1498 | B5-05C | A | | TSW | 09/89 ▸ 08/91 | B31615200 | **730437** | 352 574 | CBS |
| 1.6,1.6 i | BW/12/1272/8272 | E | 1598 | B6-5M,B6-82,B6-88 | M | | TSW | 06/86 ▸ 08/93 | B63115200A | **731142** | 352 574 | CBS |
| 1.6 | BW1273 | E | 1598 | B6-89 | A | | | 06/86 ▸ 06/87 | B63415200A | | 352 594 | CBS |

## 626 (GC) (82>87)

| | | | | | | | | | | | | |
|---|---|---|---|---|---|---|---|---|---|---|---|---|
| 1600 | GC/1213/1413/1613 | E | 1587 | F6 | A | | | > ▸ 1987 | FE0615200C | | 350 650 | CBS |
| 1600 | GC/1213/1413/1613 | E | 1587 | F6 | A | | | 11/82 ▸ | FE0615200B | | 350 650 | CBS |

Radiator Radiateur Motorkühler Radiatore di raffreddamento Radiator Radyatör Radiador Радиатор vízhűtő Vodní chladič Radiator Ψυγείο



• **New** Nouveau **Nuevo** Novo **Nuovo** Nieuw **Neu** Nowość **Yeni** Новый Νέο **Nový**

# MAZDA (.../...)

| | Type Ctr. | | CC | | | AC | | | OE | Valeo | DIM. | | TECH |
|---|---|---|---|---|---|---|---|---|---|---|---|---|---|
| **626 (GC) (82>87) (.../...)** | | | | | | | | | | | | | |
| 1600 | GC/1213/1413/1613 | E | 1587 | F6 | A | | TSW | 11/82 ▸ 1987 | FE4515200 | **732538** | 400 | 648 | CBS |
| 1600 ▸ 531078 | GC/1211/1212/1411/1412/1612 | E | 1587 | F6 | M | | | 11/82 ▸ | FE0515200A | | 568 | 350 | CBS |
| 2000,2000 i | GC/1222/1242/1422 1442/1622/1642 | E | 1998 | FE,FE-EGI | M | | | 11/82 ▸ 1987 | FE1015200 | | 350 | 647 | CBS |
| 2000 | GC/1223/1623 | E | 1998 | FE | A | | TSW | 11/82 ▸ 1987 | FE4515200 | **732538** | 400 | 648 | CBS |
| 2000 | GC/1223/1623 | E | 1998 | FE | A | | | 11/82 ▸ 1987 | FE0615200C | | 350 | 650 | CBS |
| 2000,2000 i ▸ 531078 | GC/1222/1242/1422 1442/1622/1642 | E | 1998 | FE,FE-EGI | M | | | 11/82 ▸ | FE1615200A | | 350 | 650 | CBS |
| 2000 D | GC/1232/1431/1432 | D | 1998 | RF | M | | | 03/84 ▸ 1987 | RF0315200B | | 350 | 648 | CBS |
| **626 (GD) (87>92)** | | | | | | | | | | | | | |
| 1.6 | GD/1282/1482 | E | 1587 | F6-83 | M | | TSW | 10/87 ▸ 01/92 | F8C115200 | **730440** | 400 | 648 | CBS |
| 1.8 | GD/1212/1292/1412/1492 | E | 1789 | F8,F8-K9 | M | | TSW | 10/87 ▸ 01/92 | F8C715200 | **730440** | 400 | 648 | CBS |
| 1.8 | GD/1214/1294/1414/1494 | E | 1789 | F8,F8-K8 | A | | | 10/87 ▸ 01/92 | F8C815200A | | 400 | 648 | CBS |
| 2.0 i 16V | GD/1252/12E2/1452 1652/16E2/7252/72E2/7452/7652 | E | 1998 | FE-FL,FE-FN | M | | TSW | 10/87 ▸ 01/92 | FE5A15200 | **732538** | 400 | 648 | CBS |
| 2.0,2.0 i | GD/1232/12D2/1432 14D2/1632/16D2 | E | 1998 | FE-90,FE-FK,FE-GA | M | | | 10/87 ▸ 01/92 | FE4J15200A | | 400 | 647 | ALB |
| 2.0,2.0 i | GD/1232/12D2/1432 14D2/1632/16D2 | E | 1998 | FE-90,FE-FK,FE-GA | M | | TSW | 10/87 ▸ 01/92 | FE4J15200 | **732538** | 400 | 648 | CBS |
| 2.0,2.0 i | GD/1234/12D4/1434 14D4/1634 | E | 1998 | FE-90,FE-FJ,FE-FK,FE-GB | A | | TSW | 10/87 ▸ 01/92 | FE4K15200A | **731139** | 400 | 647 | ALB |
| 2.2 i | GD/12H2/14H2/16H2/72H2/74H2/76H2/82H2/84H2 | E | 2184 | F2-G2,F2-G4,F2-G7 | M | | TSW | 08/89 ▸ 01/92 | F2H115200 | **730440** | 400 | 648 | CBS |
| 2.2 i | GD/12H4/14H4/16H4 | E | 2184 | F2-G3,F2-G4 | A | | TSW | 08/89 ▸ 01/92 | F2H215200 | **734581** | 400 | 648 | CBS |
| **626 (GE) (91>97)** | | | | | | | | | | | | | |
| 1.8 i 16V | GE/12A2/14A2 | E | 1840 | FP-01,FP-16 | M | | TSW | 02/92 ▸ 05/97 | FS1915200E | **731073** | 690 | 336 | ALB |
| 1.8 i 16V | GE/12A5/14A5 | E | 1840 | FP-01 | A | | TSW | 09/91 ▸ 05/94 | FS2015200F | **731372** | 690 | 385 | ALB |
| 2.0 i 16V | 1Y/ZGE1 ; GE/12J2 14J2/86J2 | E | 1991 | FS-31,FS-84 | M | | TSW | 02/92 ▸ 05/97 | FS1915200E | **731073** | 690 | 336 | ALB |
| 2.0 i 16V | GE/12J5/14J5 | E | 1991 | FS-83 | A | | TSW | 09/91 ▸ 05/97 | FS2015200F | **731372** | 690 | 385 | ALB |
| 2.5 i | GE/14F2/74F2 | E | 2497 | KL-21 | M | | | 02/92 ▸ 05/97 | KL1915200F | **731466** | 690 | 340 | |
| 2.5 i | GE14F5 | E | 2497 | KL-22 | A | | | 02/92 ▸ 05/97 | KL2015200G | **731472** | 690 | 339 | ALB |
| 2.0 D | GE/1242/1442 | D | 1998 | RF-G5 | M | | | 03/92 ▸ 05/97 | RFG215200B | **731417** | 375 | 738 | CBS |
| **626 (GF) (97>99)** | | | | | | | | | | | | | |
| 1.8 i 16V | GF/12P2/14P2 | E | 1840 | FP | M | | | 06/97 ▸ 09/99 | FSJ315200A | | 690 | 336 | ALB |
| 1.8 i 16V | GF/12P2/14P2 | E | 1840 | FP | M | | TSW | 06/97 ▸ 09/99 | FSJ315200A | **731073** | 690 | 336 | ALB |
| 2.0 i 16V | GF/12F2/14F2/14S2 | E | 1991 | FS-115,FS-136 | M | | | 06/97 ▸ 09/99 | FSJ315200A | | 690 | 336 | ALB |
| 2.0 i 16V | GF/12F2/14F2/14S2 | E | 1991 | FS-115,FS-136 | M | | TSW | 06/97 ▸ 09/99 | FSJ315200A | **731073** | 690 | 336 | ALB |
| 2.0 i 16V | GF/12F5/14F5/14S5 | E | 1991 | FS-115,FS-136 | A | | | 06/97 ▸ 09/99 | FSJ215200 | | 690 | 385 | ALB |
| 2.0 i 16V | GF/12F5/14F5/14S5 | E | 1991 | FS-115,FS-136 | A | | TSW | 06/97 ▸ 09/99 | FSJ215200 | **731372** | 690 | 385 | ALB |
| **626 (GF) (99>2002)** | | | | | | | | | | | | | |
| 1.8 i 16V | GF/12P2/14P2 | E | 1840 | FP | M | | | 10/99 ▸ 05/02 | FSJ315200A | | 690 | 336 | ALB |
| 1.8 i 16V | GF/12P2/14P2 | E | 1840 | FP | M | | TSW | 10/99 ▸ 05/02 | FSJ315200A | **731073** | 690 | 336 | ALB |
| 2.0 i 16V | GF/12F2/14F2/14S2 | E | 1991 | FS-115,FS-136 | M | | | 06/00 ▸ 05/02 | FSJ315200A | | 690 | 336 | ALB |
| 2.0 i 16V | GF/12F2/14F2/14S2 | E | 1991 | FS-115,FS-136 | M | | TSW | 06/00 ▸ 05/02 | FS1915200F | **731073** | 690 | 336 | ALB |
| 2.0 i 16V | GF/12F5/12S5/14F5 14S5 | E | 1991 | FS-115,FS-136 | A | | | 09/00 ▸ 05/02 | FSJ215200 | | 690 | 385 | ALB |
| 2.0 i 16V | GF/12F5/12S5/14F5 14S5 | E | 1991 | FS-115,FS-136 | A | | TSW | 09/00 ▸ 05/02 | FS2015200H | **731372** | 690 | 385 | ALB |
| **626 (GV) (88>92)** | | | | | | | | | | | | | |
| 1800 | GV/1212/1292 | E | 1789 | F8-K9 | M | | TSW | 10/88 ▸ 02/92 | FEDG15200 | **732538** | 400 | 648 | CBS |
| 2000,2000 i | GV/1232/12D2 | E | 1998 | FE-FJ,FE-GA | M | | TSW | 10/88 ▸ 02/92 | FEDG15200 | **732538** | 400 | 648 | CBS |
| 2000 i 16V | GV12E2 | E | 1998 | FE-FN | M | | | 10/88 ▸ 02/92 | FEDC15200 | | 400 | 648 | CBS |
| 2000 | GV1232 | E | 1998 | FE-FJ | M | | TSW | 10/88 ▸ 1992 | FE4J15200 | **732538** | 400 | 648 | CBS |
| 2000 i 16V | GV1252 | E | 1998 | FE-FL | M | | TSW | 10/88 ▸ 02/92 | FEAM15200 | **732538** | 400 | 648 | CBS |
| 2000 | GV1234 | E | 1998 | FE-FK | A | | TSW | 10/88 ▸ 02/92 | FE4K15200A | **731139** | 400 | 647 | ALB |
| 2200 i | GV/12H2/72H2 | E | 2184 | F2-G2,F2-L1 | M | | TSW | 10/88 ▸ 02/92 | F2J215200 | **732538** | 400 | 648 | CBS |
| **626 (GV) (92>97)** | | | | | | | | | | | | | |
| 2.0 i | GV12D2 | E | 1998 | FE-Y8 | M | | TSW | 03/92 ▸ 10/97 | FEDG15200 | **732538** | 400 | 648 | CBS |
| 2.0 i 16V | GV12E2 | E | 1998 | FE-KD | M | | TSW | 03/92 ▸ 10/97 | FEAM15200 | **732538** | 400 | 648 | CBS |
| 2.2 i | GV/12H2/82H2 | E | 2184 | F2-G6,F2-Y4 | M | | TSW | 03/92 ▸ 10/97 | F2J215200 | **732538** | 400 | 648 | CBS |

| Type Ctr. | | CC | | AC | | 2+3 | OE | Valeo | DIM. | TECH |
|---|---|---|---|---|---|---|---|---|---|---|
| **MAZDA** (.../...) | | | | | | | | | | |
| **626 (GV) (92>97) (.../...)** | | | | | | | | | | |
| 2.2 i GV12H5 | E | 2184 | F2-M2 | A | | TSW | 03/92 ▸ 10/97 | F2H215200 | **734581** | 400 648 | CBS |
| **626 (GW) (97>99)** | | | | | | | | | | |
| 1.8 i 16V GW14P2 ▸ 115126 | E | 1840 | FP | M | | | 11/97 ▸ | FSJ315200A | | 690 336 | ALB |
| 1.8 i 16V GW14P2 ▸ 115126 | E | 1840 | FP | M | | TSW | 11/97 ▸ | FSJ315200A | **731073** | 690 336 | ALB |
| 2.0 i 16V GW/14S2/19S2 | E | 1991 | FS-115,FS-136 | M | | TSW | 11/97 ▸ 09/99 | FSJ315200A | **731073** | 690 336 | ALB |
| 2.0 i 16V GW/14S2/19S2 | E | 1991 | FS-115,FS-136 | M | | | 11/97 ▸ 09/99 | FSJ315200A | | 690 336 | ALB |
| 2.0 i 16V GW14S5 | E | 1991 | FS-115,FS-136 | A | | | 11/97 ▸ 09/99 | FSJ215200 | | 690 385 | ALB |
| 2.0 i 16V GW14S5 | E | 1991 | FS-115,FS-136 | A | | TSW | 11/97 ▸ 09/99 | FSJ215200 | **731372** | 690 385 | ALB |
| **626 (GW) (99>2002)** | | | | | | | | | | |
| 1.8 i 16V GW14P2 | E | 1840 | FP | M | | | 10/99 ▸ 05/02 | FSJ315200A | | 690 336 | ALB |
| 1.8 i 16V GW14P2 | E | 1840 | FP | M | | TSW | 10/99 ▸ 05/02 | FSJ315200A | **731073** | 690 336 | ALB |
| 2.0 i 16V GW14S2 | E | 1991 | FS-115,FS-136 | M | + | | 06/00 ▸ 05/02 | FSJ315200A | | 690 336 | ALB |
| 2.0 i 16V GW14S2 | E | 1991 | FS-115,FS-136 | M | + | TSW | 06/00 ▸ 05/02 | FSJ315200A | **731073** | 690 336 | ALB |
| 2.0 i 16V GW14S2 | E | 1991 | FS-115,FS-136 | M | | | 06/00 ▸ 05/02 | FS1915200F | | 690 336 | ALB |
| 2.0 i 16V GW14S2 | E | 1991 | FS-115,FS-136 | M | | TSW | 06/00 ▸ 05/02 | FS1915200F | **731073** | 690 336 | ALB |
| 2.0 i 16V GW14S5 | E | 1991 | FS-115,FS-136 | A | | | 09/00 ▸ 05/02 | FSJ215200 | | 690 385 | ALB |
| 2.0 i 16V GW14S5 | E | 1991 | FS-115,FS-136 | A | | TSW | 09/00 ▸ 05/02 | FS2015200H | **731372** | 690 385 | ALB |
| **CX-7** | | | | | | | | | | |
| 2.3 i Turbo 16V EH/42/43 | E | 2261 | MZR-DISI TURBO | A | | | 05/07 ▸ 09/09 | L33L15200 | •**735577** | 747 450 | ALB |
| **DEMIO** | | | | | | | | | | |
| 1.3 i DW/1/1922/1932 | E | 1324 | B3-2E,B3-2EL,B3-2ELP,B3-2EN | M | | | 05/98 ▸ 03/03 | B5C715200A | **732726** | 350 382 | ALB |
| **MPV** | | | | | | | | | | |
| 3.0 V6 LV12E2 | E | 2954 | JE-96 | M | | | 06/96 ▸ 10/99 | JEA315200B | **734207** | 503 643 | ALB |
| 3.0 V6 LV12J5 | E | 2954 | JE-96 | A | | | 06/96 ▸ 10/99 | JE9815200C | **734118** | 503 643 | ALB |
| 2.5 TD LV12L2 | D | 2499 | WL-01 | M | | | 12/95 ▸ 10/99 | JE9815200C | **734118** | 503 643 | ALB |
| **MX3** | | | | | | | | | | |
| 1.6 i,1.6 i 16V EC/13A2/13C2 | E | 1598 | B6-16V,B6-9J | M | | | 03/91 ▸ 02/98 | B66S15200B | | | |
| **MX5 (NA) (90>98)** | | | | | | | | | | |
| 1.6 i NA/18B2/18C2 | E | 1598 | B6-9J,B6-ZE | M | | | 04/90 ▸ 02/98 | BPE815200 | **731437** | 320 647 | ALB |
| 1.8 i NA18P2 | E | 1840 | BP-F1 | M | | | 09/93 ▸ 02/98 | BPE815200 | **731437** | 320 647 | ALB |
| **MX5 (NB) (98>2000)** | | | | | | | | | | |
| 1.6 i 16V NB1862 | E | 1598 | B6-4J | M | | | 03/98 ▸ 08/00 | BP4W15200A | **734119** | 320 643 | ALB |
| 1.6 i 16V NB1565 | E | 1598 | B6-4J | A | | | 03/98 ▸ 08/00 | BP4W15200A | **734119** | 320 643 | ALB |
| 1.8 i 16V NB/18P2/18P6 | E | 1840 | BP-ZE | M | | | 03/98 ▸ 08/00 | BP4W15200A | **734119** | 320 643 | ALB |
| 1.8 i 16V NB18P5 | E | 1840 | BP-ZE | A | | | 03/98 ▸ 08/00 | BP4W15200A | **734119** | 320 643 | ALB |
| **MX5 (2000>)** | | | | | | | | | | |
| 1.6 i 16V NB1862 | E | 1598 | B6-4J | M | | | 09/00 ▸ 08/02 | BP4W15200A | **734119** | 320 643 | ALB |
| 1.8 i 16V NB/18P2/18P6 | E | 1840 | BP-5C | M | | | 09/00 ▸ 08/02 | BP4W15200A | **734119** | 320 643 | ALB |
| **MX6** | | | | | | | | | | |
| 2.0 i GE16J2 | E | 1991 | FS-19 | M | | TSW | 07/91 ▸ 08/97 | FS1915200E | **731073** | 690 336 | ALB |
| 2.0 i GE16J5 | E | 1991 | FS-19 | A | | TSW | 09/91 ▸ 03/93 | FS2015200F | **731372** | 690 385 | ALB |
| 2.5 i V6 GE/16F2/76F2 | E | 2497 | KL-19 | M | | | 07/91 ▸ 08/97 | KL1915200F | **731466** | 690 340 | |
| 2.5 i V6 GE16F5 | E | 2497 | KL-20 | A | | | 09/91 ▸ 08/97 | KL2015200G | **731472** | 690 339 | ALB |
| **PREMACY (99>2001)** | | | | | | | | | | |
| 1.8 i 16V CP19 | E | 1840 | FP-18 | A | | | 06/99 ▸ 06/01 | FP8515200A | **734126** | 352 686 | ALB |
| **TRIBUTE** | | | | | | | | | | |
| 2.0 i 16V CU/06B/07B/08B/0SB | E | 1989 | YF | M | | | 01/00 ▸ 12/03 | YF0915200 | | 700 467 | ALB |
| 3.0 i V6 24V CU/061/081 | E | 2967 | AJ | A | | | 01/00 ▸ 06/04 | AJ0315200 | **734468** | 700 507 | ALB |
| **XEDOS 6** | | | | | | | | | | |
| 2.0 i V6 CA12B2 | E | 1995 | K8-ZE20 | M | | | 10/91 ▸ 11/99 | K81715200C | **731466** | 690 340 | |
| **MCC** | | | | | | | | | | |
| **CROSSBLADE** | | | | | | | | | | |
| 0.6 i 450418 | E | 599 | 160.910 | M | +/- | | 06/02 ▸ 12/03 | 0003428V006000000 | **734848** | 341 380 | ALB |

Radiator Radiateur Motorkühler Radiatore di raffreddamento Radiator Radyatör Radiador Радиатор vízhűtő Vodní chladič Radiator Ψυγείο



• **New** Nouveau **Nuevo** Novo **Nuovo** Nieuw **Neu** Nowość **Yeni** Новый Νέο **Novy**

| Type | Type Ctr. | | CC | | | AC | | | OE | Valeo | DIM. | TECH |
|---|---|---|---|---|---|---|---|---|---|---|---|---|
| **MCC (.../...)** | | | | | | | | | | | | |
| **FORFOUR** | | | | | | | | | | | | |
| 1.1 i | 454030 | E | 1124 | 134.910 | M | + | | 04/04 ▸ 06/06 | 4545001503 | **735055** | 640 402 | ALB |
| 1.1 i | 454033 | E | 1124 | 134.911 | M | | | 04/04 ▸ 06/06 | 4545001503 | **735055** | 640 402 | ALB |
| 1.3 i | 454031 | E | 1332 | 135.930 | M | + | | 04/04 ▸ 06/06 | 4545001503 | **735055** | 640 402 | ALB |
| 1.5 i | 454032 | E | 1499 | 135.950 | M | + | | 04/04 ▸ 06/06 | 4545001503 | **735055** | 640 402 | ALB |
| 1.5 Cdi | 454001 ; 454000 | D | 1493 | 639.939 | M | + | | 09/04 ▸ 06/06 | 4545001103 | **735056** | 640 402 | ALB |
| 1.5 Cdi | 454000 ; 454001 | D | 1493 | 639.939 | M | | | 09/04 ▸ 06/06 | 4545001103 | **735056** | 640 402 | ALB |
| **FORTWO (98>2006)** | | | | | | | | | | | | |
| 0.6 i | 450.34 ; 450.33 ; 450.44 ; 450.45 ; 450.41 MC01 ; 450.35 | E | 599 | 160.910 | M | +/- | | 10/98 ▸ 12/06 | 0003428V006000000 | **734848** | 341 380 | ALB |
| 0.6 i | 450.45 | E | 599 | 160.910 | M | | | 03/00 ▸ 12/06 | 0003428V006000000 | **734848** | 341 380 | ALB |
| 0.7 i | 450.33 ; 450335 ; 450.43 | E | 698 | 160.920 | M | +/- | | 02/03 ▸ 12/06 | 0003428V006000000 | **734848** | 341 380 | ALB |
| 0.8 CDI | 450.40 ; 450.30 450.36 | D | 799 | 660.940 | M | +/- | | 09/99 ▸ 12/06 | 0003428V006000000 | **734848** | 341 380 | ALB |
| **ROADSTER** | | | | | | | | | | | | |
| 0.7 i | 452434 ; 452337 ; 452432 ; 452437 ; 452334 | E | 698 | 160.921,160.922,160.923 | M | - | | 05/03 ▸ 11/05 | 0010033V003000000 | **735054** | 599 394 | |
| **MERCEDES** | | | | | | | | | | | | |
| **190 (201)** | | | | | | | | | | | | |
| 2.0 | 201/.022/.023 | E | 1997 | 102.921,102.924,102.938 | M | + | | 12/82 ▸ 1993 | 2015004103 | | 573 372 | ALB |
| 2.0 | 201/.022/.023 | E | 1997 | 102.921,102.924,102.938 | M | - | TSW | 12/82 ▸ 1993 | 2015004603 | **819368** | 292 340 | ALB |
| 2.0 | 201/.022/.023 | E | 1997 | 102.921,102.924,102.938 | M | - | TSW | 12/82 ▸ 1993 | 2015001903 | **883876** | 574 377,5 | ALM |
| 2.0 i | 201.024 | E | 1997 | 102.961-122 | M | | TSW | 12/82 ▸ 09/88 | 2015001903 | **883876** | 574 377,5 | ALM |
| 2.0 | 201.023 | E | 1997 | 102.924 | A | + | | 12/82 ▸ 1993 | 2015004103 | | 573 372 | ALB |
| 2.0 | 201.023 | E | 1997 | 102.924 | A | - | TSW | 12/82 ▸ 1993 | 2015004603 | **819368** | 292 340 | ALB |
| 2.3 i 16S | 201.034 | E | 2299 | 102.983 | M | + | | 08/84 ▸ 1989 | 2015008303 | | 575 445 | ALB |
| 2.3 i 16S | 201.034 | E | 2299 | 102.983 | M | + | TSW | 08/84 ▸ 1989 | 2015005303 | **819383** | 488 449 | CBS |
| 2.3 i 16S | 201.034 | E | 2299 | 102.983 | M | - | | 08/84 ▸ 1989 | 2015006103 | | 410 368 | ALB |
| 2.3 i 16S | 201.034 | E | 2299 | 102.983 | M | | TSW | 08/84 ▸ 1989 | 2015004303 | **730344** | 575 449 | CBS |
| 2.3 i 16S | 201.034 | E | 2299 | 102.983 | A | + | TSW | 08/84 ▸ 1989 | 2015005303 | **819383** | 488 449 | CBS |
| 2.3 i 16S | 201.034 | E | 2299 | 102.983 | A | - | | 08/84 ▸ 1989 | 2015006103 | | 410 368 | ALB |
| 2.5 i 16S F273282 ▸ | 201/.035/.036 | E | 2498 | 102.990,102.991 | A | + | TSW | > ▸ 1993 | 2015005303 | **819383** | 488 449 | CBS |
| 2.5 i 16S F273282 ▸ | 201.036 | E | 2498 | 102.991 | M | + | TSW | > ▸ 1993 | 2015005303 | **819383** | 488 449 | CBS |
| 2.5 i 16S | 201/.035/.036 | E | 2498 | 102.990,102.991 | M | + | | 09/88 ▸ 1993 | 2015008303 | | 575 445 | ALB |
| 2.5 i 16S | 201.035 | E | 2498 | 102.990 | M | + | TSW | 09/88 ▸ 1993 | 2015003503 | **730344** | 575 449 | CBS |
| 2.5 i 16S F273282 ▸ | 201.035 | E | 2498 | 102.990 | M | | TSW | > ▸ 1993 | 2015005303 | **819383** | 488 449 | CBS |
| 2.5 i 16S | 201/.035/.036 | E | 2498 | 102.990,102.991 | M | | TSW | 09/88 ▸ 1993 | 2015004303 | **730344** | 575 449 | CBS |
| 2.5 i 16S ▸ F723281 | 201/.035/.036 | E | 2498 | 102.990,102.991 | A | - | | 09/88 ▸ | 2015006103 | | 410 368 | ALB |
| 2.5 i 16S ▸ F723281 | 201/.035/.036 | E | 2498 | 102.990,102.991 | M | - | | 09/88 ▸ | 2015006103 | | 410 368 | ALB |
| 2.0 D | 201.122 | D | 1997 | 601.911 | M | + | | 12/83 ▸ 1993 | 2015008303 | | 575 445 | ALB |
| 2.0 D | 201.122 | D | 1997 | 601.911 | M | - | | 12/83 ▸ 1993 | 2015004103 | | 573 372 | ALB |
| 2.0 D | 201.122 | D | 1997 | 601.911 | M | - | TSW | 12/83 ▸ 1993 | 2015001903 | **883876** | 574 377,5 | ALM |
| 2.0 D | 201.122 | D | 1997 | 601.911 | A | + | | 12/83 ▸ 1993 | 2015008303 | | 575 445 | ALB |
| 2.0 D | 201.122 | D | 1997 | 601.911 | A | - | | 12/83 ▸ 1993 | 2015004103 | | 573 372 | ALB |
| 2.0 D | 201.122 | D | 1997 | 601.911 | M | + | | 12/83 ▸ 1993 | 2015008303 | | 575 445 | ALB |
| 2.0 D | 201.122 | D | 1997 | 601.911 | M | - | TSW | 12/83 ▸ 1993 | 2015001903 | **883876** | 574 377,5 | ALM |
| 2.0 D | 201.122 | D | 1997 | 601.911 | M | - | | 12/83 ▸ 1993 | 2015004103 | | 573 372 | ALB |
| 2.5 D Turbo | 201.128 | D | 2497 | 602.961 | A | +/- | | 07/86 ▸ 1993 | 2015009103 | **732090** | 590 478 | ALB |
| 2.5 D Turbo | 201.128 | D | 2497 | 602.961 | M | +/- | | 07/86 ▸ 1993 | 2015009103 | **732090** | 590 478 | ALB |
| **200/300 (123)** | | | | | | | | | | | | |
| 200 | 123.020 | E | 1988 | 115.938/39 | M | - | | 01/76 ▸ 07/80 | 1235015801 | | 416 492 | CBS |
| 200T | 123.280 | E | 1997 | 102.939 | M | +/- | | 11/80 ▸ 1985 | 1235015601 | | 419 502 | CBS |
| 200 | 123.220 | E | 1997 | 102.920,102.939 | M | + | | 01/76 ▸ 1985 | 1235015801 | | 416 492 | CBS |
| 200 | 123.220 | E | 1997 | 102.920,102.939 | A | + | | 01/76 ▸ 1985 | 1235015601 | | 419 502 | CBS |
| 230TE i | 123.283 | E | 2299 | 102.980 | M | +/- | | 06/80 ▸ 1985 | 1235015801 | | 416 492 | CBS |
| 230E i | 123.223 | E | 2299 | 102.980 | M | - | | 06/80 ▸ 1985 | 1235015801 | | 416 492 | CBS |
| 230CE i | 123.243 | E | 2299 | 102.980 | M | | | 06/80 ▸ 07/85 | 1235015601 | | 419 502 | CBS |
| 230TE i | 123.283 | E | 2299 | 102.980 | A | +/- | | 06/80 ▸ 1985 | 1235015601 | | 419 502 | CBS |
| 230E i | 123.223 | E | 2299 | 102.980 | A | - | | 06/80 ▸ 1985 | 1235015601 | | 419 502 | CBS |
| 230CE i | 123.243 | E | 2299 | 102.980 | A | | | 06/80 ▸ 07/85 | 1235015601 | | 419 502 | CBS |

# MERCEDES (.../...)

## 200/300 (123) (.../...)

| | | CC | | AC | | | OE | Valeo | DIM. | TECH |
|---|---|---|---|---|---|---|---|---|---|---|
| 230,230C,230T | 123/.000/.023/.043 .083 | E | 2307 | 115.954 | M | + | 01/76 ▸ 02/81 | 1235013301 | 417 573 | CBS |
| 230,230C | 123/.000/.023/.043 | E | 2307 | 115.954 | M | + | 01/76 ▸ 02/81 | 1235013401 | 417 574 | CBS |
| 230,230C,230T | 123/.000/.023/.043 .083 | E | 2307 | 115.954 | M | | 01/76 ▸ 02/81 | 1235015801 | 416 492 | CBS |
| 250,250L,250T | 123/.003/.026/.028 .086 078977, 003334 ▸ | E | 2525 | 123.920,123.921 | M | + | > ▸ 1985 | 1235012901 | 419 502 | CBS |
| 250,250L,250T | 123/.003/.026/.028 .086 | E | 2525 | 123.920,123.921 | M | - | 01/76 ▸ 1985 | 1235013301 | 417 573 | CBS |
| 250,250L | 123/.003/.026/.028 | E | 2525 | 123.920,123.921 | M | | 01/76 ▸ 1985 | 1235013401 | 417 574 | CBS |
| 250T | 123.086 | E | 2525 | 123.920,123.921 | M | | 04/78 ▸ 08/82 | 1235015801 | 416 492 | CBS |
| 250L | 123.028 078977 ▸ | E | 2525 | 123.920,123.921 | A | + | 01/76 ▸ 1985 | 1235012901 | 419 502 | CBS |
| 250L | 123.028 | E | 2525 | 123.920,123.921 | A | - | 01/76 ▸ 1985 | 1235013301 | 417 573 | CBS |
| 250L | 123.028 ▸ 078976 | E | 2525 | 123.920,123.921 | A | + | 01/76 ▸ | 1235014401 | 417 573 | CBS |
| 250,250L,250T | 123/.003/.026/.028 .086 ▸ 078976, 003333 | E | 2525 | 123.920,123.921 | M | + | 01/76 ▸ | 1235015403 | 417 574 | CBS |
| 250,250L,250T | 123/.003/.026/.028 .086 ▸ 078976, 079146 | E | 2525 | 123.920,123.921 | M | + | 01/76 ▸ | 1235014401 | 417 573 | CBS |
| 280CE i | 123.053 026710 ▸ | E | 2746 | 110.984,110.988 | M | +/- | > ▸ 07/85 | 1235013301 | 417 573 | CBS |
| 280,280CE i,280E,280E i 280EL i,280TE i | 123/.007/.030/.033 .050/.053/.093 | E | 2746 | 110.923,110.984,110.988 | M | + | 01/76 ▸ 07/85 | 1235012901 | 419 502 | CBS |
| 280E i,280EL i,280TE i | 123/.007/.033/.093 | E | 2746 | 110.984,110.988 | M | - | > ▸ 1985 | 1235013301 | 417 573 | CBS |
| 280,280CE i,280E,280E i 280EL i,280TE i | 123/.007/.030/.033 .050/.053/.093 | E | 2746 | 110.923,110.984,110.988 | M | | 01/76 ▸ 07/85 | 1235015801 | 416 492 | CBS |
| 280CE i | 123.053 026710 ▸ | E | 2746 | 110.984,110.988 | A | +/- | > ▸ 07/85 | 1235013301 | 417 573 | CBS |
| 280,280CE i,280E i | 123/.030/.033/.053 | E | 2746 | 110.923,110.984,110.988 | A | + | 01/76 ▸ 07/85 | 1235012901 | 419 502 | CBS |
| 280E i | 123.033 | E | 2746 | 110.988 | A | + | 01/76 ▸ 1985 | 1235011201 | 419 502 | CBS |
| 280E i | 123.033 | E | 2746 | 110.988 | A | - | 01/76 ▸ 1985 | 1235013301 | 417 573 | CBS |
| 280 | 123.030 | E | 2746 | 110.923 | A | - | 01/76 ▸ 07/81 | 1235011201 | 419 502 | CBS |
| 200D D | 123.120 146687 ▸ | D | 1998 | 615.940 | M | + | 01/76 ▸ 1985 | 1235015601 | 419 502 | CBS |
| 200D D | 123.120 | D | 1998 | 615.940 | M | - | 01/76 ▸ 1985 | 1235015801 | 416 492 | CBS |
| 200D D | 123.120 146687 ▸ | D | 1998 | 615.940 | A | + | 01/76 ▸ 1985 | 1235015601 | 419 502 | CBS |
| 200D D | 123.120 | D | 1998 | 615.940 | A | - | 01/76 ▸ 1985 | 1235011201 | 419 502 | CBS |
| 200D D | 123.120 | D | 1998 | 615.940 | A | | 01/76 ▸ 1985 | 1235011201 | 419 502 | CBS |
| 200D D | 123.120 ▸ 146686 | D | 1998 | 615.940 | M | + | 01/76 ▸ | 1235011201 | 419 502 | CBS |
| 200D D | 123.120 ▸ 146686 | D | 1998 | 615.940 | A | + | 01/76 ▸ | 1235011201 | 419 502 | CBS |
| 220D D | 123.126 146687 ▸ | D | 2197 | 615.941 | M | + | 01/76 ▸ 1979 | 1235015601 | 419 502 | CBS |
| 220D D | 123.126 | D | 2197 | 615.941 | M | | 01/76 ▸ 1979 | 1235015801 | 416 492 | CBS |
| 220D D | 123.126 146687 ▸ | D | 2197 | 615.941 | A | + | 01/76 ▸ 1979 | 1235015601 | 419 502 | CBS |
| 220D D | 123.126 | D | 2197 | 615.941 | A | | 01/76 ▸ 1979 | 1235011201 | 419 502 | CBS |
| 220D D | 123.126 ▸ 146686 | D | 2197 | 615.941 | M | + | 01/76 ▸ | 1235011201 | 419 502 | CBS |
| 220D D | 123.126 ▸ 146686 | D | 2197 | 615.941 | A | + | 01/76 ▸ | 1235011201 | 419 502 | CBS |
| 240D D,240DL D | 123/.102/.103/.123 .125 146687 ▸ | D | 2404 | 616.912 | M | + | 01/76 ▸ 1985 | 1235015601 | 419 502 | CBS |
| 240TD D | 123.183 | D | 2404 | 616.912 | M | + | 02/78 ▸ 1985 | 1235015403 | 417 574 | CBS |
| 240D D,240DL D,240TD D | 123/.102/.103/.123 .125/.183 | D | 2404 | 616.912 | M | | 01/76 ▸ 1985 | 1235015801 | 416 492 | CBS |
| 240D D,240DL D | 123/.102/.103/.123 .125 | D | 2404 | 616.912 | A | + | 01/76 ▸ | 1235011201 | 419 502 | CBS |
| 240D D,240DL D | 123/.102/.103/.123 .125 146687 ▸ | D | 2404 | 616.912 | A | + | 01/76 ▸ 1985 | 1235015601 | 419 502 | CBS |
| 240D D,240DL D | 123/.102/.123/.125 | D | 2404 | 616.912 | A | | 01/76 ▸ 1985 | 1235011201 | 419 502 | CBS |

Radiator Ψυγείο Vodní chladič Радиатор vízhűtő Radiador Radiator Radyatör Radiator Radiatore di raffreddamento Radiateur Motorkühler Radiator



• **New** Nouveau **Nuevo** Novo **Nuovo** Nieuw **Neu** Nowość **Yeni** Новый Νέο **Nový**

## 200/300 (123) (.../...)

| | | | CC | | AC | | | OE | Valeo | DIM. | TECH |
|---|---|---|---|---|---|---|---|---|---|---|---|
| 240D D,240DL D | 123/.102/.103/.123 .125 ▸ 146686 | D | 2404 | 616.912 | M | + | | 01/76 ▸ | 1235011201 | 419 502 | CBS |
| 300TD TD | 123.193 | D | 2998 | 617.952 | M | +/- | | 08/80 ▸ 1985 | 1265003503 | **819379** 428 538 | CBS |
| 300D D,300DL D,300TD D | 123/.105/.130/.132 .190 | D | 2998 | 617.912 | M | + | | 01/76 ▸ 1985 | 1235015403 | 417 574 | CBS |
| 300D D,300DL D,300TD D | 123/.105/.130/.132 .190 | D | 2998 | 617.912 | M | + | | 01/76 ▸ 1985 | 1235014401 | 417 573 | CBS |
| 300D D,300DL D,300TD D | 123/.105/.130/.132 .190 ▸ 164483, 164442 ▸ | D | 2998 | 617.912 | M | - | | > ▸ 1985 | 1235012901 | 419 502 | CBS |
| 300TD D | 123.190 ▸ 011486, 164442 ▸ | D | 2998 | 617.912 | M | | | > ▸ 1985 | 1235012901 | 419 502 | CBS |
| 300TD TD | 123.193 | D | 2998 | 617.952 | M | | | 08/80 ▸ 1985 | 1265000903 | **819379** 428 538 | CBS |
| 300D D,300DL D | 123/.105/.130 | D | 2998 | 617.912 | A | + | | 01/76 ▸ 1985 | 1235014401 | 417 573 | CBS |
| 300D D,300DL D | 123/.105/.130 ▸ 164483 ▸ | D | 2998 | 617.912 | A | - | | > ▸ 1985 | 1235012901 | 419 502 | CBS |
| 300D D,300DL D,300TD D | 123/.105/.130/.132 .190 ▸ 164441, 164482 | D | 2998 | 617.912 | M | | | 01/76 ▸ | 1235015801 | 416 492 | CBS |
| 300D D | 123.130 ▸ 164482 | D | 2998 | 617.912 | A | - | | 01/76 ▸ | 1235011201 | 419 502 | CBS |
| 300DL D | 123.105 | D | 2998 | 617.912 | A | | | 01/76 ▸ | 1235011201 | 419 502 | CBS |

## 200/300 (124)

| | | | | | | | | | | | |
|---|---|---|---|---|---|---|---|---|---|---|---|
| 200,200 CE i,200E i,200T 200TE i | 124/.020/.021/.041 .080/.081 | E | 1997 | 102.922,102.963 | M | | TSW | 12/84 ▸ 09/92 | 2015004603 | **819368** 292 340 | ALB |
| 200 | 124.020 | E | 1997 | 102.922 | A | - | TSW | 12/84 ▸ 02/90 | 2015004603 | **819368** 292 340 | ALB |
| 200E i,200TE i | 124/.021/.081 | E | 1997 | 102.963 | A | | TSW | 12/84 ▸ 09/92 | 2015002903 | **819201** 410 366 | ALB |
| 200 CE i,200T | 124/.041/.080 | E | 1997 | 102.922,102.963 | A | | TSW | 03/86 ▸ 1992 | 2015004603 | **819368** 292 340 | ALB |
| 200 CE i,200E i,200TE i | 124/.019/.040/.079 | E | 1998 | 111.940 | M | + | | 09/89 ▸ 06/93 | 1245006303 | **732460** 488 488 | ALB |
| 200E i | 124.019 | E | 1998 | 111.940 | M | + | | 10/92 ▸ 06/93 | 1245006203 | **732460** 488 488 | ALB |
| 200 CE i | 124.040 | E | 1998 | 111.940 | M | | | 09/89 ▸ 06/93 | 1245008403 | 292 340 | ALB |
| 200E i,200TE i | 124/.019/.079 | E | 1998 | 111.940 | M | | | 10/92 ▸ 06/93 | 1245008303 | 292 340 | ALB |
| 200E i | 124.019 | E | 1998 | 111.940 | M | | | 10/92 ▸ 06/93 | 1245007103 | 292 340 | ALB |
| 200 CE i,200E i,200TE i | 124/.019/.040/.079 | E | 1998 | 111.940 | A | + | | 09/89 ▸ 06/93 | 1245006303 | **732460** 488 488 | ALB |
| 200E i | 124.019 | E | 1998 | 111.940 | A | + | | 10/92 ▸ 06/93 | 1245006203 | **732460** 488 488 | ALB |
| 200 CE i,200E i,200TE i | 124/.019/.040/.079 | E | 1998 | 111.940 | A | | | 09/89 ▸ 06/93 | 1245008403 | 292 340 | ALB |
| 200 CE i,200E i | 124/.019/.040 | E | 1998 | 111.940 | A | | | 09/89 ▸ 06/93 | 1245005603 | 292 340 | ALB |
| 220 CE i | 124.042 | E | 2199 | 111.960 | M | + | | 10/92 ▸ 06/93 | 1245006303 | **732460** 488 488 | ALB |
| 220 CE i | 124.042 | E | 2199 | 111.960 | M | | | 10/92 ▸ 06/93 | 1245006003 | 410 368 | ALB |
| 220 CE i | 124.042 | E | 2199 | 111.960 | A | + | | 10/92 ▸ 06/93 | 1245006303 | **732460** 488 488 | ALB |
| 220 CE i | 124.042 | E | 2199 | 111.960 | A | | | 10/92 ▸ 06/93 | 1245006003 | 410 368 | ALB |
| 230 CE i,230E i,230TE i E230 i | 124/.023/.043/.083 | E | 2299 | 102.982 | M | | TSW | 12/84 ▸ 09/92 | 2015004603 | **819368** 292 340 | ALB |
| 230 CE i,230TE i,E230 i | 124/.023/.043/.083 | E | 2299 | 102.982 | A | | TSW | 12/84 ▸ 09/92 | 2015002903 | **819201** 410 366 | ALB |
| 260E i | 124/.026/.027/.226 | E | 2599 | 103.940,103.943 | M | + | | 01/85 ▸ 09/92 | 1245002803 | **819377** 533 487 | CBS |
| 260E i | 124/.026/.027/.226 | E | 2599 | 103.940,103.943 | M | | | 01/85 ▸ 09/92 | 1245001503 | 450 368 | ALB |
| 260E i | 124/.026/.027/.226 | E | 2599 | 103.940,103.943 | A | + | | 06/85 ▸ 09/92 | 1245002803 | **819377** 533 487 | CBS |
| 260E i | 124/.026/.027/.226 | E | 2599 | 103.940,103.943 | A | | | 06/85 ▸ 09/92 | 1245001503 | 450 368 | ALB |
| 260E i | 124/.026/.226 | E | 2599 | 103.940,103.943 | M | + | | 01/85 ▸ 09/92 | 1245002803 | **819377** 533 487 | CBS |
| 280EL i | 124.029 | E | 2799 | 104.942 | M | + | | 10/92 ▸ 06/93 | 1245002803 | **819377** 533 487 | CBS |
| 280EL i | 124.029 | E | 2799 | 104.942 | M | | | 10/92 ▸ 06/93 | 1245001503 | 450 368 | ALB |
| 280EL i | 124.029 | E | 2799 | 104.942 | A | + | | 10/92 ▸ 06/93 | 1245002803 | **819377** 533 487 | CBS |
| 280EL i | 124.029 | E | 2799 | 104.942 | A | | | 10/92 ▸ 06/93 | 1245001503 | 450 368 | ALB |
| 300 CE i,300E i,300TE i | 124/.030/.031/.050 .051/.061/.090/.091/.230/.290 | E | 2962 | 103.980,103.983,103.985 104.980 | M | + | | 03/85 ▸ 06/93 | 1245002803 | **819377** 533 487 | CBS |
| 300TE i | 124/.090/.091/.290 | E | 2962 | 103.983,103.985,104.980 | M | + | | 03/86 ▸ 06/93 | 1245009003 | **819377** 533 487 | CBS |
| 300 CE i,300E i,300TE i | 124/.030/.031/.050 .051/.061/.090/.091/.230/.290 | E | 2962 | 103.980,103.983,103.985 104.980 | M | | | 03/85 ▸ 06/93 | 1245001503 | 450 368 | ALB |
| 300 CE i,300E i,300TE i | 124/.030/.031/.050 .051/.061/.090/.091/.230/.290 | E | 2962 | 103.983,103.985,104.980 | A | + | | 03/85 ▸ 06/93 | 1245002803 | **819377** 533 487 | CBS |
| 300TE i | 124/.090/.091/.290 | E | 2962 | 103.983,103.985,104.980 | A | + | | 03/86 ▸ 06/93 | 1245009003 | **819377** 533 487 | CBS |
| 300 CE i,300E i,300TE i | 124/.030/.031/.050 .051/.061/.090/.091/.230/.290 | E | 2962 | 103.983,103.985,104.980 | A | | | 03/85 ▸ 06/93 | 1245001503 | 450 368 | ALB |
| 300E i | 124.230 | E | 2962 | 103.985 | M | + | | 11/86 ▸ 09/92 | 1245002803 | **819377** 533 487 | CBS |
| 300E i | 124.230 | E | 2962 | 103.985 | M | | | 11/86 ▸ 09/92 | 1245001503 | 450 368 | ALB |
| 320 CE i | 124.052 | E | 3199 | 104.992 | M | | | 10/92 ▸ 06/93 | 1245009003 | **819377** 533 487 | CBS |
| 320 CE i | 124.052 | E | 3199 | 104.992 | A | | | 10/92 ▸ 06/93 | 1245001503 | 450 368 | ALB |
| 400E i | 124.034 | E | 4196 | 119.975 | A | | | 10/92 ▸ 06/93 | 1245001402 | **732458** 612 488 | ALB |

# MERCEDES (.../...)

## 200/300 (124) (.../...)

| Type Ctr. | | CC | | AC | | | OE | Valeo | DIM. | TECH |
|---|---|---|---|---|---|---|---|---|---|---|
| 500E i 124.036 | E | 4973 | 119.974 | A | | | 06/90 ▸ 06/93 | 1245005103 | **732458** | 612 488 | ALB |
| 200D D,200TD D 124/.120/.180 | D | 1997 | 601.912 | M | + | TSW | 12/84 ▸ 06/93 | 1245004403 | **819387** | 533 488 | ALB |
| 200D D 124.120 | D | 1997 | 601.912 | M | | | > ▸ 06/93 | 1245009203 | | 533 495 | ALB |
| B280773 ▸ | | | | | | | | | | | |
| 200D D,200TD D 124/.120/.180 | D | 1997 | 601.912 | A | + | TSW | 12/84 ▸ 06/93 | 1245004403 | **819387** | 533 488 | ALB |
| 200D D,200TD D 124/.120/.180 | D | 1997 | 601.912 | A | | | > ▸ 06/93 | 1245009303 | | 533 495 | ALB |
| F149521, B280773 ▸ | | | | | | | | | | | |
| 200D D,200TD D 124/.120/.180 | D | 1997 | 601.912 | M | - | TSW | 12/84 ▸ | 1245004903 | **883860** | 533 377,5 | ALM |
| ▸ B280772 | | | | | | | | | | | |
| 200D D,200TD D 124/.120/.180 | D | 1997 | 601.912 | A | | TSW | 12/84 ▸ | 1245002403 | **819376** | 533 368 | ALB |
| ▸ B280772, F149520 | | | | | | | | | | | |
| 250D D,250TD D 124/.125/.185 | D | 2497 | 602.912 | M | + | TSW | 12/84 ▸ 06/93 | 1245009803 | **819387** | 533 488 | ALB |
| 250D D,250D TD,250DL D 124/.125/.127/.128 | D | 2497 | 602.912,602.962 | M | + | TSW | 12/84 ▸ 06/93 | 1245004403 | **819387** | 533 488 | ALB |
| 250TD D,250TD TD .185/.188 | | | | | | | | | | | |
| 250D D,250DL D,250TD D 124/.125/.127/.185 | D | 2497 | 602.912 | M | | | 09/89 ▸ 06/93 | 1245009203 | | 533 495 | ALB |
| B177052, F135871 ▸ | | | | | | | | | | | |
| 250D D,250TD D 124/.125/.185 | D | 2497 | 602.912 | A | + | TSW | 12/84 ▸ 06/93 | 1245009803 | **819387** | 533 488 | ALB |
| 250D D,250D TD,250DL D 124/.125/.127/.128 | D | 2497 | 602.912,602.962 | A | + | TSW | 12/84 ▸ 06/93 | 1245004403 | **819387** | 533 488 | ALB |
| 250TD D,250TD TD .185/.188 | | | | | | | | | | | |
| 250D D,250DL D,250TD D 124/.125/.127/.185 | D | 2497 | 602.912 | A | | | 09/89 ▸ 06/93 | 1245009303 | | 533 495 | ALB |
| B177052, F135871 ▸ | | | | | | | | | | | |
| 250D D,250TD D 124/.125/.185 | D | 2497 | 602.912 | A | | TSW | 12/84 ▸ 12/89 | 1245002403 | **819376** | 533 368 | ALB |
| ▸ B177051, F135870 | | | | | | | | | | | |
| 250D D,250TD D 124/.125/.185 | D | 2497 | 602.912 | M | - | TSW | 12/84 ▸ 12/89 | 1245004903 | **883860** | 533 377,5 | ALM |
| ▸ F135870, B177051 | | | | | | | | | | | |
| 300D D,300TD D 124/.130/.190/.330 | D | 2996 | 603.912,603.913 | M | + | TSW | 12/84 ▸ 06/93 | 1245004403 | **819387** | 533 488 | ALB |
| 300D D,300TD D 124/.130/.190/.330 | D | 2996 | 603.912,603.913 | M | | TSW | 12/84 ▸ 06/93 | 1245009803 | **819387** | 533 488 | ALB |
| 300D D,300TD D 124/.130/.190/.330 | D | 2996 | 603.912,603.913 | A | + | TSW | 12/84 ▸ 06/93 | 1245004403 | **819387** | 533 488 | ALB |
| 300D D,300TD D 124/.130/.190/.330 | D | 2996 | 603.912,603.913 | A | | TSW | 12/84 ▸ 06/93 | 1245009803 | **819387** | 533 488 | ALB |
| 300D TD,300TD TD 124/.133/.193/.333 .393 | D | 2996 | 603.960,603.963 | A | | | 03/86 ▸ 06/93 | 1245003103 | | 612 488 | ALB |

## A CLASS (168) (97>2003)

| | | | | | | | | | | |
|---|---|---|---|---|---|---|---|---|---|---|
| A140 i 168/.031/.131 | E | 1397 | 166.940 | M | +/- | | 05/97 ▸ 06/04 | 1685001602 | **732897** | 600 355 | ALM |
| A140 i 168/.031/.131 | E | 1397 | 166.940 | A | +/- | | 10/97 ▸ 06/04 | 1685001602 | **732897** | 600 355 | ALM |
| A140 i 168.031 | E | 1397 | 166.940 | A | + | | 10/97 ▸ 06/04 | 1685000602 | **732587** | 600 350 | ALB |
| A140 i 168.031 | E | 1397 | 166.940 | A | | | 10/97 ▸ 06/04 | 1685000302 | **732587** | 600 350 | ALB |
| A140 i 168.031 | E | 1397 | 166.940 | M | + | | 05/97 ▸ | 1685000602 | **732587** | 600 350 | ALB |
| ▸ J247148 | | | | | | | | | | |
| A140 i 168.031 | E | 1397 | 166.940 | M | | | 05/97 ▸ | 1685000002 | **•732588** | 400 375 | ALB |
| ▸ J247148 | | | | | | | | | | |
| A160 i 168/.033/.133 | E | 1598 | 166.960 | M | +/- | | 10/97 ▸ 06/04 | 1685001602 | **732897** | 600 355 | ALM |
| A160 i 168.033 | E | 1598 | 166.960 | M | + | | 05/97 ▸ 06/04 | 1685000602 | **732587** | 600 350 | ALB |
| A160 i 168.033 | E | 1598 | 166.960 | M | | | 05/97 ▸ 06/04 | 1685000002 | **•732588** | 400 375 | ALB |
| A160 i 168/.033/.133 | E | 1598 | 166.960 | A | +/- | | 03/01 ▸ 06/04 | 1685001602 | **732897** | 600 355 | ALM |
| A160 i 168.033 | E | 1598 | 166.960 | A | + | | 10/97 ▸ 06/04 | 1685000602 | **732587** | 600 350 | ALB |
| A160 i 168.033 | E | 1598 | 166.960 | A | | | 10/97 ▸ 06/04 | 1685000302 | **732587** | 600 350 | ALB |
| A190 i 168/.032/.132 | E | 1898 | 166.990 | M | +/- | | 04/99 ▸ 06/04 | 1685001602 | **732897** | 600 355 | ALM |
| A190 i 168.032 | E | 1898 | 166.990 | M | | | 04/99 ▸ 06/99 | 1685000602 | **732587** | 600 350 | ALB |
| A190 i 168/.032/.132 | E | 1898 | 166.990 | A | +/- | | 06/99 ▸ 06/04 | 1685001602 | **732897** | 600 355 | ALM |
| A190 i 168.032 | E | 1898 | 166.990 | A | | | 04/99 ▸ 06/99 | 1685000602 | **732587** | 600 350 | ALB |
| A210 i 168/.035/.135 | E | 2084 | 166.995 | M | +/- | | 01/02 ▸ 06/04 | 1685001602 | **732897** | 600 355 | ALM |
| J247149 ▸ | | | | | | | | | | |
| A210 i 168/.035/.135 | E | 2084 | 166.995 | A | +/- | | 01/02 ▸ 06/04 | 1685001602 | **732897** | 600 355 | ALM |
| J247149 ▸ | | | | | | | | | | |
| A160CDI CDI,A170CDI CDI 168/.006/.007/.008 .009/.109 | D | 1689 | 668.940,668.941,668.942 | M | +/- | | 05/98 ▸ 06/04 | 1685001602 | **732897** | 600 355 | ALM |
| A160CDI CDI,A170CDI CDI 168/.007/.008 | D | 1689 | 668.940,668.941 | M | + | | 05/98 ▸ 02/01 | 1685000602 | **732587** | 600 350 | ALB |
| A160CDI CDI,A170CDI CDI 168/.006/.007/.008 .009/.109 | D | 1689 | 668.940,668.941,668.942 | A | +/- | | 05/98 ▸ 06/04 | 1685001602 | **732897** | 600 355 | ALM |
| A160CDI CDI,A170CDI CDI 168/.007/.008 | D | 1689 | 668.940,668.941 | A | + | | 05/98 ▸ 02/01 | 1685000602 | **732587** | 600 350 | ALB |

## A CLASS (169) (2004>2008)

| | | | | | | | | | | |
|---|---|---|---|---|---|---|---|---|---|---|
| A150 i 169/.031/.331 | E | 1498 | 266.920 | M | + | | 07/04 ▸ 03/08 | 1695000003 | **734378** | 650 406 | ALB |
| A150 i 169/.031/.331 | E | 1498 | 266.920 | A | + | | 07/04 ▸ 03/08 | 1695000003 | **734378** | 650 406 | ALB |
| A150 i 169/.031/.331 | E | 1498 | 266.920 | A | - | | 07/04 ▸ | 1695000403 | **734379** | 650 408 | ALB |
| A150 i 169/.031/.331 | E | 1498 | 266.920 | A | | | 07/04 ▸ | 1695000403 | **734379** | 650 408 | ALB |
| A170 i 169/.032/.332 | E | 1699 | 266.940 | M | + | | 07/04 ▸ 03/08 | 1695000003 | **734378** | 650 406 | ALB |
| A170 i 169/.032/.332 | E | 1699 | 266.940 | A | + | | 07/04 ▸ 03/08 | 1695000003 | **734378** | 650 406 | ALB |
| A170 i 169/.032/.332 | E | 1699 | 266.940 | A | - | | 07/04 ▸ | 1695000403 | **734379** | 650 408 | ALB |

Radiator Radiateur Motorkühler Radiatore di raffreddamento Radiator Radyatör Radiador Радиатор vízhűtő Vodní chladič Radiator Ψυγείο



• **New** Nouveau **Nuevo** Novo **Nuovo** Nieuw **Neu** Nowość **Yeni** Новый Νέο **Novy**

## A CLASS (169) (2004>2008) (.../...)

| | | | CC | | | AC | | | OE | Valeo | DIM. | TECH |
|---|---|---|---|---|---|---|---|---|---|---|---|---|
| A170 i | 169/.032/.332 | E | 1699 | 266.940 | A | | | 07/04 ▸ | 1695000403 | **734379** | 650 408 | ALB |
| A200 i | 169/.033/.333 | E | 2034 | 266.960 | M | + | | 07/04 ▸ 03/08 | 1695000003 | **734378** | 650 406 | ALB |
| A200 i | 169/.033/.333 | E | 2034 | 266.960 | A | + | | 07/04 ▸ 03/08 | 1695000003 | **734378** | 650 406 | ALB |
| A200 i | 169/.033/.333 | E | 2034 | 266.960 | A | - | | 07/04 ▸ | 1695000403 | **734379** | 650 408 | ALB |
| A200 i | 169/.033/.333/.334 | E | 2034 | 266.960,266.980 | A | | | 07/04 ▸ | 1695000403 | **734379** | 650 408 | ALB |
| A160CDI CDi,A180CDI CDi A200CDI CDi | 169/.006/.007/.008 .306/.307/.308 | D | 1991 | 640.940,640.941,640.942 | M | + | | 07/04 ▸ 03/08 | 1695000003 | **734378** | 650 406 | ALB |
| A160CDI CDi,A180CDI CDi A200CDI CDi | 169/.006/.007/.008 .306/.307/.308 | D | 1991 | 640.940,640.941,640.942 | A | + | | 07/04 ▸ 03/08 | 1695000003 | **734378** | 650 406 | ALB |
| A160CDI CDi,A180CDI CDi A200CDI CDi | 169/.006/.007/.008 .306/.307/.308 | D | 1991 | 640.940,640.941,640.942 | A | - | | 07/04 ▸ | 1695000403 | **734379** | 650 408 | ALB |
| A160CDI CDi,A180CDI CDi A200CDI CDi | 169/.006/.007/.008 .306/.307/.308 | D | 1991 | 640.940,640.941,640.942 | A | | | 07/04 ▸ | 1695000403 | **734379** | 650 408 | ALB |

## B CLASS (2005>2008)

| | | | | | | | | | | | | |
|---|---|---|---|---|---|---|---|---|---|---|---|---|
| B150 i | 245.231 | E | 1498 | 266.920 | M | + | | 05/05 ▸ 03/08 | 1695000003 | **734378** | 650 406 | ALB |
| B150 i | 245.231 | E | 1498 | 266.920 | A | + | | 05/05 ▸ | 1695000403 | **734379** | 650 408 | ALB |
| B150 i | 245.231 | E | 1498 | 266.920 | A | | | 05/05 ▸ 03/08 | 1695000403 | **734379** | 650 408 | ALB |
| B170 i | 245.232 | E | 1699 | 266.940 | M | + | | 05/05 ▸ 03/08 | 1695000003 | **734378** | 650 406 | ALB |
| B170 i | 245.232 | E | 1699 | 266.940 | A | + | | 05/05 ▸ | 1695000403 | **734379** | 650 408 | ALB |
| B170 i | 245.232 | E | 1699 | 266.940 | A | | | 05/05 ▸ 03/08 | 1695000403 | **734379** | 650 408 | ALB |
| B200 i | 245/.233/.234 | E | 2034 | 266.960,266.980 | M | + | | 05/05 ▸ 03/08 | 1695000003 | **734378** | 650 406 | ALB |
| B200 i | 245/.233/.234 | E | 2034 | 266.960,266.980 | A | + | | 05/05 ▸ | 1695000403 | **734379** | 650 408 | ALB |
| B200 i | 245/.233/.234 | E | 2034 | 266.960,266.980 | A | | | 05/05 ▸ 03/08 | 1695000403 | **734379** | 650 408 | ALB |
| B180 CDi,B200 CDi | 245/.207/.208 | D | 1991 | 640.940,640.941 | M | + | | 05/05 ▸ 03/08 | 1695000003 | **734378** | 650 406 | ALB |
| B180 CDi,B200 CDi | 245/.207/.208 | D | 1991 | 640.940,640.941 | A | + | | 05/05 ▸ | 1695000403 | **734379** | 650 408 | ALB |
| B180 CDi,B200 CDi | 245/.207/.208 | D | 1991 | 640.940,640.941 | A | | | 05/05 ▸ 03/08 | 1695000403 | **734379** | 650 408 | ALB |

## C CLASS (202) (93>2001)

| | | | | | | | | | | | | |
|---|---|---|---|---|---|---|---|---|---|---|---|---|
| 1.8 i | 202/.018/.078 | E | 1799 | 111.921 | M | + | | 03/93 ▸ 02/01 | 2025002203 | **731805** | 615 432 | ALB |
| 1.8 i | 202/.018/.078 | E | 1799 | 111.921 | M | | | 03/93 ▸ 02/01 | 2025006103 | **731804** | 360 432 | ALM |
| 1.8 i | 202/.018/.078 | E | 1799 | 111.921 | A | + | | 03/93 ▸ 02/01 | 2025002203 | **731805** | 615 432 | ALB |
| 1.8 i | 202/.018/.078 | E | 1799 | 111.921 | A | | | 03/93 ▸ 02/01 | 2025006103 | **731804** | 360 432 | ALM |
| 2.0 i | 202.025 | E | 1998 | 111.944 | M | +/- | | 01/94 ▸ 02/00 | 2025005103 | **732451** | 520 418 | ALB |
| 2.0 i | 202/.020/.080/.081 | E | 1998 | 111.945,111.952 | M | + | | 01/94 ▸ 02/01 | 2025002203 | **731805** | 615 432 | ALB |
| 2.0 i | 202/.020/.080 | E | 1998 | 111.945 | M | | | 01/94 ▸ 02/01 | 2025006103 | **731804** | 360 432 | ALM |
| 2.0 i | 202.082 | E | 1998 | 111.944 | M | | | 06/97 ▸ 02/01 | 2025005203 | **732451** | 520 418 | ALB |
| 2.0 i | 202/.020/.080/.081 | E | 1998 | 111.945,111.952 | A | + | | 01/94 ▸ 02/01 | 2025002203 | **731805** | 615 432 | ALB |
| 2.0 i | 202/.020/.080 | E | 1998 | 111.945 | A | | | 01/94 ▸ 02/01 | 2025006103 | **731804** | 360 432 | ALM |
| 2.0 i | 202.082 | E | 1998 | 111.944 | A | | | 06/97 ▸ 02/01 | 2025005203 | **732451** | 520 418 | ALB |
| 2.2 i | 202.022 | E | 2199 | 111.961 | M | + | | 03/93 ▸ 02/00 | 2025002203 | **731805** | 615 432 | ALB |
| 2.2 i | 202.022 | E | 2199 | 111.961 | M | | | 03/93 ▸ 02/00 | 2025006103 | **731804** | 360 432 | ALM |
| 2.2 i | 202.022 | E | 2199 | 111.961 | A | + | | 03/93 ▸ 02/00 | 2025002203 | **731805** | 615 432 | ALB |
| 2.2 i | 202.022 | E | 2199 | 111.961 | A | | | 03/93 ▸ 02/00 | 2025006103 | **731804** | 360 432 | ALM |
| 2.3 i | 202.024 | E | 2295 | 111.975 | M | +/- | | 09/95 ▸ 02/00 | 2025005103 | **732451** | 520 418 | ALB |
| 2.3 i | 202/.023/.083 | E | 2295 | 111.974 | M | + | | 08/95 ▸ 02/01 | 2025002203 | **731805** | 615 432 | ALB |
| 2.3 i | 202/.023/.083 | E | 2295 | 111.974 | M | | | 08/95 ▸ 02/01 | 2025006103 | **731804** | 360 432 | ALM |
| 2.3 i | 202.085 | E | 2295 | 111.975 | M | | | 06/97 ▸ 02/01 | 2025005203 | **732451** | 520 418 | ALB |
| 2.3 i | 202/.023/.083 | E | 2295 | 111.974 | A | + | | 08/95 ▸ 02/01 | 2025002203 | **731805** | 615 432 | ALB |
| 2.3 i | 202/.023/.083 | E | 2295 | 111.974 | A | | | 08/95 ▸ 02/01 | 2025006103 | **731804** | 360 432 | ALM |
| 2.3 i | 202.085 | E | 2295 | 111.975 | A | | | 06/97 ▸ 02/01 | 2025005203 | **732451** | 520 418 | ALB |
| 2.4 i, 2.4 i V6 | 202.026/.086 | E | 2398 | 112.910 | M | + | | 06/97 ▸ 02/00 | 2025002203 | **731805** | 615 432 | ALB |
| 2.4 i,2.4 i V6 | 202/.026/.086 | E | 2398 | 112.910 | M | + | | 06/97 ▸ 02/01 | 2025003203 | **731808** | 615 422 | ALB |
| 2.4 i,2.4 i V6 | 202/.026/.086 | E | 2398 | 112.910 | A | + | | 06/97 ▸ 02/01 | 2025003203 | **731808** | 615 422 | ALB |
| 2.4 i, 2.4 i V6 | 202.026/.086 | E | 2398 | 112.910 | A | + | | 06/97 ▸ 02/00 | 2025002203 | **731805** | 615 432 | ALB |
| 2.6 i V6 | 202.088 | E | 2597 | 112.915 | M | | | 04/00 ▸ 02/01 | 2025002203 | **731805** | 615 432 | ALB |
| 2.6 i V6 | 202.088 | E | 2597 | 112.915 | A | | | 04/00 ▸ 02/01 | 2025002203 | **731805** | 615 432 | ALB |
| 2.8 i | 202.028 | E | 2799 | 104.941 | M | + | | 05/93 ▸ 02/00 | 2025004103 | **732450** | 615 420 | ALB |
| 2.8 i | 202.089/.029 | E | 2799 | 112.920 | M | + | | 06/97 ▸ 06/00 | 2025003203 | **731808** | 615 422 | ALB |
| 2.8 i | 202/.029/.089 | E | 2799 | 112.920 | M | | | 05/93 ▸ 02/01 | 2025002203 | **731805** | 615 432 | ALB |
| 2.8 i | 202.028 | E | 2799 | 104.941 | A | + | | 05/93 ▸ 02/00 | 2025004103 | **732450** | 615 420 | ALB |
| 2.8 i | 202.089/.029 | E | 2799 | 112.920 | A | + | | 06/97 ▸ 06/00 | 2025003203 | **731808** | 615 422 | ALB |
| 2.8 i | 202/.029/.089 | E | 2799 | 112.920 | A | | | 05/93 ▸ 02/01 | 2025002203 | **731805** | 615 432 | ALB |
| 3.6 i | 202.028 | E | 3606 | C36AMG | A | + | | 09/94 ▸ 02/00 | 2025004103 | **732450** | 615 420 | ALB |
| 2.0 D | 202.120 | D | 1997 | 601.913 | M | + | | 03/93 ▸ 02/00 | 2025003203 | **731808** | 615 422 | ALB |
| 2.0 D | 202.120 | D | 1997 | 601.913 | A | + | | 03/93 ▸ 02/00 | 2025003203 | **731808** | 615 422 | ALB |
| 2.0 D | 202/.122/.180 | D | 1998 | 604.915 | M | + | | 03/93 ▸ 02/01 | 2025003203 | **731808** | 615 422 | ALB |
| 2.0 D | 202/.122/.180 | D | 1998 | 604.915 | A | + | | 03/93 ▸ 02/01 | 2025003203 | **731808** | 615 422 | ALB |
| 2.2 CDI | 202/.133/.134/.193 .194 | D | 2151 | 611.960,611.960A | M | + | | 03/98 ▸ 02/00 | 2025006403 | | | ALB |

# MERCEDES (.../...)

## C CLASS (202) (93>2001) (.../...)

| Type Ctr. | | CC | | AC | | | OE | Valeo | DIM. | TECH |
|---|---|---|---|---|---|---|---|---|---|---|
| 2.2 CDI 202/.133/.134/.193 .194 | D | 2151 | 611.960,611.960A | A | + | | 03/98 ▸ 02/00 | 2025006403 | | | ALB |
| 2.2 D 202/.121/.182 | D | 2155 | 604.910 | M | + | | 08/93 ▸ 02/01 | 2025003203 | **731808** | 615 422 | ALB |
| 2.2 D 202/.121/.182 | D | 2155 | 604.910 | A | + | | 08/93 ▸ 02/01 | 2025003203 | **731808** | 615 422 | ALB |
| 2.5 D 202.125 | D | 2497 | 605.910 | M | + | | 05/93 ▸ 02/00 | 2025003203 | **731808** | 615 422 | ALB |
| 2.5 TD 202.128/.188 | D | 2497 | 605.960 | M | + | | 09/95 ▸ 02/00 | 2025005603 | | 615 422 | ALB |
| 2.5 D 202.125 | D | 2497 | 605.910 | A | + | | 05/93 ▸ 02/00 | 2025003203 | **731808** | 615 422 | ALB |
| 2.5 TD 202.128/.188 | D | 2497 | 605.960 | A | + | | 09/95 ▸ 02/00 | 2025005603 | | 615 422 | ALB |

## C CLASS (203) (2000>2003)

| | | | | | | | | | | | |
|---|---|---|---|---|---|---|---|---|---|---|---|
| 1.8 CGI 16V,1.8 i 16V 203/.042/.043/.046 .240/.242/.243/.246/.740/.742/.746 | E | 1796 | 271.940,271.942,271.946 271.948 | M | +/- | | 06/02 ▸ 12/03 | 2035001003 | **732741** | 649,4 414 | ALB |
| 1.8 CGI 16V,1.8 i 16V 203/.240/.242/.243 .246/.740/.742/.746 | E | 1796 | 271.940,271.942,271.946 271.948 | M | +/- | | 06/02 ▸ 12/03 | 2035003403 | **732741** | 649,4 414 | ALB |
| 1.8 CGI 16V,1.8 i 16V 203/.042/.043/.046 .240/.242/.243/.246/.740/.742/.746 | E | 1796 | 271.940,271.942,271.946 271.948 | M | + | | 06/02 ▸ 12/03 | 2035000503 | **732741** | 649,4 414 | ALB |
| 1.8 CGI 16V,1.8 i 16V 203/.240/.242/.243 .246/.740/.742/.746 | E | 1796 | 271.940,271.942,271.946 271.948 | A | +/- | | 06/02 ▸ 12/03 | 2035003403 | **732741** | 649,4 414 | ALB |
| 1.8 CGI 16V,1.8 i 16V 203/.042/.043/.046 .240/.242/.243/.246/.740/.742/.746 | E | 1796 | 271.940,271.942,271.946 271.948 | A | +/- | | 06/02 ▸ 12/03 | 2035000503 | **732741** | 649,4 414 | ALB |
| 2.0 i 203/.245/.735/.745 | E | 1998 | 111.951,111.955 | M | +/- | | 09/00 ▸ 12/03 | 2035001003 | **732741** | 649,4 414 | ALB |
| 2.0 i 203/.045/.735 | E | 1998 | 111.951,111.955 | M | + | | 04/00 ▸ 12/03 | 2035000503 | **732741** | 649,4 414 | ALB |
| 2.0 i 203.045 | E | 1998 | 111.955 | M | + | | 04/00 ▸ 12/03 | 2035001103 | **732740** | 649,4 414 | ALB |
| 2.0 i 203/.035/.735 | E | 1998 | 111.951 | M | | | 09/00 ▸ 12/03 | 2035000303 | **732741** | 649,4 414 | ALB |
| 2.0 i 203.235 | E | 1998 | 111.951 | M | | | 03/01 ▸ 12/03 | 2035000403 | | 649 403,3 | ALM |
| 2.0 i 203/.045/.245/.735/.745 | E | 1998 | 111.951,111.955 | A | +/- | | 04/00 ▸ 12/03 | 2035000503 | **732741** | 649,4 414 | ALB |
| 2.0 i 203/.245/.735/.745 | E | 1998 | 111.951,111.955 | A | +/- | | 09/00 ▸ 12/03 | 2035001003 | **732741** | 649,4 414 | ALB |
| 2.0 i 203.035 | E | 1998 | 111.951 | A | + | | 09/00 ▸ 12/03 | 2035000303 | **732741** | 649,4 414 | ALB |
| 2.0 i 203.235 | E | 1998 | 111.951 | A | | | 03/01 ▸ 12/03 | 2035000403 | | 649 403,3 | ALM |
| 2.3 i 203.747 | E | 2295 | 111.981 | M | +/- | | 09/00 ▸ 12/03 | 2035001003 | **732741** | 649,4 414 | ALB |
| 2.3 i 203.747 | E | 2295 | 111.981 | A | +/- | | 09/00 ▸ 12/03 | 2035000503 | **732741** | 649,4 414 | ALB |
| 2.6 i V6 18V 203/.061/.261 | E | 2597 | 112.912 | M | +/- | | 04/00 ▸ 12/03 | 2035003403 | **732741** | 649,4 414 | ALB |
| 2.6 i V6 18V 203.261 | E | 2597 | 112.912 | M | +/- | | 03/01 ▸ 12/03 | 2035001003 | **732741** | 649,4 414 | ALB |
| 2.6 i V6 18V 203/.061/.261 | E | 2597 | 112.912 | M | + | | 04/00 ▸ 12/03 | 2035000503 | **732741** | 649,4 414 | ALB |
| 2.6 i V6 18V 203.061 | E | 2597 | 112.912 | M | + | | 04/00 ▸ 12/03 | 2035001103 | **732740** | 649,4 414 | ALB |
| 2.6 i V6 18V 203/.061/.261 | E | 2597 | 112.912 | A | +/- | | 04/00 ▸ 12/03 | 2035003403 | **732741** | 649,4 414 | ALB |
| 2.6 i V6 18V 203/.081/.261/.281 | E | 2597 | 112.912,112.916 | A | +/- | | 03/01 ▸ 12/03 | 2035000503 | **732741** | 649,4 414 | ALB |
| 3.2 i V6 18V 203/.084/.264/.265 .284/.764 | E | 3199 | 112.946 | M | +/- | | 09/02 ▸ 12/03 | 2035001003 | **732741** | 649,4 414 | ALB |
| 3.2 i V6 18V 203.764 | E | 3199 | 112.946 | M | +/- | | 09/02 ▸ 12/03 | 2035003403 | **732741** | 649,4 414 | ALB |
| 3.2 i V6 18V 203.764 | E | 3199 | 112.946 | M | + | | 09/02 ▸ 12/03 | 2035002503 | **732743** | 649,4 414,5 | ALB |
| 3.2 i V6 18V 203.764 | E | 3199 | 112.946 | M | + | | 09/02 ▸ 12/03 | 2035000503 | **732741** | 649,4 414 | ALB |
| 3.2 i V6 18V 203/.064/.264/.284 .764 | E | 3199 | 112.946,112.953 | A | +/- | | 04/00 ▸ 12/03 | 2035003403 | **732741** | 649,4 414 | ALB |
| 3.2 i V6,3.2 i V6 18V 203/.084/.264/.265 .284/.764 | E | 3199 | 112.946,112.953,112.961 | A | +/- | | 03/01 ▸ 12/03 | 2035001003 | **732741** | 649,4 414 | ALB |
| 3.2 i V6 18V 203/.084/.264/.284 .764 | E | 3199 | 112.946,112.953 | A | +/- | | 03/01 ▸ 12/03 | 2035000503 | **732741** | 649,4 414 | ALB |
| 3.2 i V6 203.065 | E | 3199 | 112.961 | A | + | | 09/00 ▸ | 2035000703 | **732743** | 649,4 414,5 | ALB |
| 3.2 i V6,3.2 i V6 18V 203/.065/.265/.764 | E | 3199 | 112.946,112.961 | A | + | | 09/00 ▸ 12/03 | 2035002503 | **732743** | 649,4 414,5 | ALB |
| 3.2 i V6,3.2 i V6 18V 203/.065/.265/.764 | E | 3199 | 112.946,112.961 | A | + | | 09/00 ▸ 12/03 | 2035003903 | **732743** | 649,4 414,5 | ALB |
| 3.2 i V6 203.265 | E | 3199 | 112.961 | A | + | READ+ | 03/01 ▸ 12/03 | 2035000100 | •**735479** | 650 114 | ALB |
| 3.2 i V6 203.265 | E | 3199 | 112.961 | A | | | 03/01 ▸ 12/03 | 2035000703 | **732743** | 649,4 414,5 | ALB |
| 2.1 CDI,2.1 CDI 16V 203/.007/.204/.206 .207/.208/.706 | D | 2148 | 611.962,646.962,646.963 | M | +/- | | 09/00 ▸ 12/03 | 2035001003 | **732741** | 649,4 414 | ALB |
| 2.1 CDI,2.1 CDI 16V 203/.004/.006/.007 .204/.206/.207/.208/.706 | D | 2148 | 611.962,646.962,646.963 | M | + | | 04/00 ▸ 12/03 | 2035000503 | **732741** | 649,4 414 | ALB |
| 2.1 CDI 203/.004/.006 | D | 2148 | 611.962 | M | + | | 04/00 ▸ 12/03 | 2035001103 | **732740** | 649,4 414 | ALB |
| 2.1 CDI 16V 203/.207/.208 | D | 2148 | 646.962,646.963 | M | | | 01/03 ▸ 12/03 | 2035003403 | **732741** | 649,4 414 | ALB |
| 2.1 CDI,2.1 CDI 16V 203/.004/.006/.007 .204/.206/.207/.208/.706 | D | 2148 | 611.962,646.962,646.963 | A | +/- | | 04/00 ▸ 12/03 | 2035000503 | **732741** | 649,4 414 | ALB |
| 2.1 CDI,2.1 CDI 16V 203/.007/.204/.206 .207/.208/.706 | D | 2148 | 611.962,646.962,646.963 | A | +/- | | 09/00 ▸ 12/03 | 2035001003 | **732741** | 649,4 414 | ALB |
| 2.1 CDI 203/.004/.006 | D | 2148 | 611.962 | A | + | | 04/00 ▸ 12/03 | 2035001103 | **732740** | 649,4 414 | ALB |
| 2.1 CDI 203.004 | D | 2148 | 611.962 | A | | | 04/00 ▸ 12/03 | 2035000603 | **732740** | 649,4 414 | ALB |
| 2.1 CDI 16V 203/.207/.208 | D | 2148 | 646.962,646.963 | A | | | 01/03 ▸ 12/03 | 2035003403 | **732741** | 649,4 414 | ALB |
| 2.7 CDI 203.016 | D | 2685 | 612.962 | M | + | | 08/00 ▸ | 2035000803 | **732900** | 649 414,5 | ALB |
| 2.7 CDI 203/.016/.216 | D | 2685 | 612.962 | M | | | 08/00 ▸ 12/03 | 2035002303 | **732742** | 649 414 | ALB |
| 2.7 CDI 203.016 | D | 2685 | 612.962 | A | + | | 08/00 ▸ | 2035000803 | **732900** | 649 414,5 | ALB |
| 2.7 CDI 203/.016/.216 | D | 2685 | 612.962 | A | | | 08/00 ▸ 12/03 | 2035002303 | **732742** | 649 414 | ALB |

Radiator Radiateur Motorkühler Radiatore di raffreddamento Radyatör Radiator Radiador Радиатор vízhűtő Vodní chladič Radiator Ψυγείο



• **New** Nouveau **Nuevo** Novo **Nuovo** Nieuw **Neu** Nowość **Yeni** Новый Νέο **Nový**

## C CLASS (203) (2000>2003) (.../...)

| | | | CC | | AC | | | OE | Valeo | DIM. | TECH |
|---|---|---|---|---|---|---|---|---|---|---|---|
| 3.0 CDI 20V | 203/.018/.218/.718 | D | 2950 | 612.990 | A | + | | 09/02 ▸ 12/03 | 2035003903 | **732743** | 649,4 414,5 | ALB |
| 3.0 CDI 20V | 203/.018/.218/.718 | D | 2950 | 612.990 | A | | | 09/02 ▸ 12/03 | 2035002503 | **732743** | 649,4 414,5 | ALB |

## C CLASS (203) (2004>)

| | | | | | | | | | | | | |
|---|---|---|---|---|---|---|---|---|---|---|---|---|
| C180 i,C200 i,C200CGI CGI C220CGI CGI,C230 i | 203/.040/.042/.043 .046/.240/.242/.243 .246/.740/.742/.743/.746 | E | 1796 | 271.940,271.942,271.946 271.948 | M | + | | 01/04 ▸ 02/08 | 2035001003 | **732741** | 649,4 414 | ALB |
| C160 i,C180 i,C200 i C200CGI CGI,C220CGI CGI C230 i | 203/.040/.042/.043 .046/.240/.242/.243 .246/.730/.740/.742 .743/.746 | E | 1796 | 271.921,271.940,271.942 271.946,271.948 | M | | | 01/04 ▸ 02/08 | 2035003403 | **732741** | 649,4 414 | ALB |
| C160 i,C180 i,C200 i C220CGI CGI,C230 i | 203/.240/.242/.243 .246/.730 | E | 1796 | 271.921,271.940,271.942 271.946,271.948 | M | | | 01/04 ▸ 02/08 | 2035003903 | **732743** | 649,4 414,5 | ALB |
| C180 i,C200 i,C200CGI CGI C220CGI CGI,C230 i | 203/.040/.042/.043 .046/.240/.242/.243 .246/.740/.742/.743/.746 | E | 1796 | 271.940,271.942,271.946 271.948 | A | + | | 01/04 ▸ 02/08 | 2035000503 | **732741** | 649,4 414 | ALB |
| C180 i,C200 i,C200CGI CGI C220CGI CGI,C230 i | 203/.040/.042/.043 .046/.240/.242/.243 .740/.742/.743/.746 | E | 1796 | 271.940,271.942,271.946 271.948 | A | + | | 01/04 ▸ 02/08 | 2035003403 | **732741** | 649,4 414 | ALB |
| C180 i,C200 i,C200CGI CGI C220CGI CGI,C230 i | 203/.040/.042/.043 .046/.240/.242/.243 .246/.740/.742/.743/.746 | E | 1796 | 271.940,271.942,271.946 271.948 | A | + | | 01/04 ▸ 02/08 | 2035001003 | **732741** | 649,4 414 | ALB |
| C160 i,C180 i | 203/.246/.730 | E | 1796 | 271.921,271.946 | A | | | 01/04 ▸ 02/08 | 2035003403 | **732741** | 649,4 414 | ALB |
| C160 i,C180 i,C200 i C220CGI CGI,C230 i | 203/.240/.242/.243 .246/.730 | E | 1796 | 271.921,271.940,271.942 271.946,271.948 | A | | | 01/04 ▸ 02/08 | 2035003903 | **732743** | 649,4 414,5 | ALB |
| C230 i | 203/.052/.252 | E | 2496 | 272.920 | M | | | 01/04 ▸ 08/07 | 2035001003 | **732741** | 649,4 414 | ALB |
| C230 i | 203.752 | E | 2496 | 272.920 | M | + | | 01/05 ▸ 02/08 | 2035000100 | •**735479** | 650 114 | ALB |
| C230 i | 203.752 | E | 2496 | 272.920 | M | | | 01/05 ▸ 02/08 | 2035002503 | **732743** | 649,4 414,5 | ALB |
| C230 i | 203/.052/.252 | E | 2496 | 272.920 | A | | | 01/04 ▸ 08/07 | 2035001003 | **732741** | 649,4 414 | ALB |
| C230 i | 203.752 | E | 2496 | 272.920 | A | | | 01/05 ▸ 02/08 | 2035003403 | **732741** | 649,4 414 | ALB |
| C230 i | 203.752 | E | 2496 | 272.920 | A | | | 01/05 ▸ 02/08 | 2035003903 | **732743** | 649,4 414,5 | ALB |
| C240 i | 203/.061/.261 | E | 2597 | 112.916 | M | + | | 01/04 ▸ 08/07 | 2035003403 | **732741** | 649,4 414 | ALB |
| C240 i | 203/.061/.261 | E | 2597 | 112.916 | M | + | | 01/04 ▸ 08/07 | 2035001003 | **732741** | 649,4 414 | ALB |
| C240 i | 203/.061/.261 | E | 2597 | 112.916 | M | | | 01/04 ▸ 08/07 | 2035000503 | **732741** | 649,4 414 | ALB |
| C240 i | 203/.061/.081/.261 .281 | E | 2597 | 112.916 | A | + | | 01/04 ▸ 08/07 | 2035001003 | **732741** | 649,4 414 | ALB |
| C240 i | 203/.061/.081/.261 .281 | E | 2597 | 112.916 | A | + | | 01/04 ▸ 08/07 | 2035003403 | **732741** | 649,4 414 | ALB |
| C240 i | 203/.061/.261 | E | 2597 | 112.916 | A | | | 01/04 ▸ 08/07 | 2035000503 | **732741** | 649,4 414 | ALB |
| C280 i | 203.054 | E | 2996 | 272.940 | M | | | 07/05 ▸ 12/06 | 2035003403 | **732741** | 649,4 414 | ALB |
| C280 i | 203.054 | E | 2996 | 272.940 | M | | | 07/05 ▸ 12/06 | 2035003903 | **732743** | 649,4 414,5 | ALB |
| C280 i | 203/.054/.092/.254 .292 | E | 2996 | 272.940 | A | | | 06/05 ▸ 08/07 | 2035003403 | **732741** | 649,4 414 | ALB |
| C280 i | 203/.054/.092/.254 .292 | E | 2996 | 272.940 | A | | | 06/05 ▸ 08/07 | 2035003903 | **732743** | 649,4 414,5 | ALB |
| C320 i | 203.764 | E | 3199 | 112.946 | M | + | | 01/04 ▸ 02/08 | 2035002503 | **732743** | 649,4 414,5 | ALB |
| C320 i | 203.764 | E | 3199 | 112.946 | M | + | | 01/04 ▸ 02/08 | 2035001003 | **732741** | 649,4 414 | ALB |
| C320 i | 203.764 | E | 3199 | 112.946 | A | + | | 01/04 ▸ 02/08 | 2035002503 | **732743** | 649,4 414,5 | ALB |
| C320 i | 203/.064/.084/.264 .284/.764 | E | 3199 | 112.946,112.953 | A | + | | 01/04 ▸ 02/08 | 2035003403 | **732741** | 649,4 414 | ALB |
| C320 i | 203/.064/.084/.284 .764 | E | 3199 | 112.946,112.953 | A | + | | 01/04 ▸ 02/08 | 2035001003 | **732741** | 649,4 414 | ALB |
| C320 i | 203/.084/.284/.764 | E | 3199 | 112.946,112.953 | A | + | | 01/04 ▸ 02/08 | 2035000503 | **732741** | 649,4 414 | ALB |
| C320 i | 203.284 | E | 3199 | 112.953 | A | | | 01/04 ▸ 08/07 | 2035003903 | **732743** | 649,4 414,5 | ALB |
| C350 i | 203/.056/.256 | E | 3498 | 272.960 | M | | | 07/05 ▸ 08/07 | 2035002503 | **732743** | 649,4 414,5 | ALB |
| C350 i | 203/.056/.256 | E | 3498 | 272.960 | M | + | | 07/05 ▸ 08/07 | 2035000100 | •**735479** | 650 114 | ALB |
| C350 i | 203/.056/.087/.256 .287/.756 | E | 3498 | 272.960,272.970 | A | | | 01/05 ▸ 02/08 | 2035003403 | **732741** | 649,4 414 | ALB |
| C350 i | 203/.056/.087/.256 .287/.756 | E | 3498 | 272.960,272.970 | A | | | 01/05 ▸ 02/08 | 2035003903 | **732743** | 649,4 414,5 | ALB |
| C55AMG i | 203/.076/.276 | E | 5439 | 113.988 | A | + | | 01/04 ▸ 08/07 | 2035003903 | **732743** | 649,4 414,5 | ALB |
| C55AMG i | 203.276 | E | 5439 | 113.988 | A | | | 01/04 ▸ 08/07 | 2035003403 | **732741** | 649,4 414 | ALB |
| C200CDI CDI,C220CDI CDI | 203/.007/.008/.207 .208/.707/.708 | D | 2148 | 646.962,646.963 | M | + | | 01/04 ▸ 02/08 | 2035001003 | **732741** | 649,4 414 | ALB |
| C200CDI CDI,C220CDI CDI | 203/.007/.008/.707 .708 | D | 2148 | 646.962,646.963 | M | | | 01/04 ▸ 02/08 | 2035003403 | **732741** | 649,4 414 | ALB |
| C200CDI CDI,C220CDI CDI | 203/.207/.208 | D | 2148 | 646.962,646.963 | M | | | 01/04 ▸ 08/07 | 2035002503 | **732743** | 649,4 414,5 | ALB |
| C200CDI CDI,C220CDI CDI | 203/.207/.208 | D | 2148 | 646.962,646.963 | M | + | | 01/04 ▸ 08/07 | 2035000100 | •**735479** | 650 114 | ALB |
| C200CDI CDI,C220CDI CDI | 203/.007/.008/.207 .208/.707/.708 | D | 2148 | 646.962,646.963 | A | + | | 01/04 ▸ 02/08 | 2035000503 | **732741** | 649,4 414 | ALB |

# MERCEDES (.../...)

## C CLASS (203) (2004>) (.../...)

| | | CC | | AC | | | OE | Valeo | DIM. | TECH |
|---|---|---|---|---|---|---|---|---|---|---|
| C200CDI CDI,C220CDI CDI | 203/.007/.008/.207 .208/.707/.708 | D | 2148 | 646.962,646.963 | A | + | 01/04 ▸ 02/08 | 2035003403 | **732741** | 649,4 414 | ALB |
| C200CDI CDI,C220CDI CDI | 203/.207/.208 | D | 2148 | 646.962,646.963 | A | | 01/04 ▸ 08/07 | 2035003903 | **732743** | 649,4 414,5 | ALB |
| C270CDI CDI | 203.216 | D | 2685 | 612.962 | M | + | 01/04 ▸ 07/05 | 2035000100 | **•735479** | 650 114 | ALB |
| C270CDI CDI | 203/.016/.216 | D | 2685 | 612.962 | M | | 01/04 ▸ 07/05 | 2035002303 | **732742** | 649 414 | ALB |
| C270CDI CDI | 203.216 | D | 2685 | 612.962 | M | | 01/04 ▸ 07/05 | 2035002503 | **732743** | 649,4 414,5 | ALB |
| C270CDI CDI | 203.216 | D | 2685 | 612.962 | A | | 01/04 ▸ 07/05 | 2035003403 | **732741** | 649,4 414 | ALB |
| C270CDI CDI | 203/.016/.216 | D | 2685 | 612.962 | A | | 01/04 ▸ 07/05 | 2035002303 | **732742** | 649 414 | ALB |
| C270CDI CDI | 203.216 | D | 2685 | 612.962 | A | | 01/04 ▸ 07/05 | 2035003903 | **732743** | 649,4 414,5 | ALB |
| C30CDI CDI | 203/.018/.218/.718 | D | 2950 | 612.990 | A | + | 01/04 ▸ 02/08 | 2035003903 | **732743** | 649,4 414,5 | ALB |
| C30CDI CDI | 203/.018/.218/.718 | D | 2950 | 612.990 | A | | 01/04 ▸ 02/08 | 2035002503 | **732743** | 649,4 414,5 | ALB |
| C30CDI CDI | 203.218 | D | 2950 | 612.990 | A | | 01/04 ▸ 08/07 | 2035003403 | **732741** | 649,4 414 | ALB |
| C320CDI CDI | 203/.020/.220 | D | 2987 | 642.910 | M | + | 07/05 ▸ 08/07 | 2035002003 | **734941** | | |
| C320CDI CDI | 203/.020/.220 | D | 2987 | 642.910 | M | | 07/05 ▸ 08/07 | 2035002503 | **732743** | 649,4 414,5 | ALB |
| C320CDI CDI | 203/.020/.220 | D | 2987 | 642.910 | M | + | 07/05 ▸ 08/07 | 2035000100 | **•735479** | 650 114 | ALB |
| C320CDI CDI | 203/.020/.220 | D | 2987 | 642.910 | A | + | 07/05 ▸ 08/07 | 2035002003 | **734941** | | |
| C320CDI CDI | 203/.020/.220 | D | 2987 | 642.910 | A | | 07/05 ▸ 08/07 | 2035003903 | **732743** | 649,4 414,5 | ALB |
| C320CDI CDI | 203/.020/.220 | D | 2987 | 642.910 | A | | 07/05 ▸ 08/07 | 2035003403 | **732741** | 649,4 414 | ALB |

## C CLASS (204) (2007>)

| | | | | | | | | | | | |
|---|---|---|---|---|---|---|---|---|---|---|---|
| 1.6 BE 16V,1.6 i 16V | 204/.044/.045/.245 | E | 1597 | 271.910 | M | | 04/08 ▸ 02/11 | 2045002203 | **•735285** | 451,5 640 | ALB |
| 1.6 BE 16V,1.6 i 16V | 204/.044/.045/.245 | E | 1597 | 271.910 | A | + | 04/08 ▸ 02/11 | 2045000203 | **•735138** | 451,5 640 | ALB |
| 1.6 BE 16V,1.6 i 16V | 204/.044/.045/.245 | E | 1597 | 271.910 | M | + | 04/08 ▸ | 2045000303 | **•735139** | 451,5 640 | ALB |
| 1.8 CGI 16V,1.8 i 16V | 204/.041/.046/.048 .049/.241/.246/.248/.249 | E | 1796 | 271.820,271.950,271.952 | M | | 01/07 ▸ 02/11 | 2045002203 | **•735285** | 451,5 640 | ALB |
| 1.8 CGI 16V | 204/.047/.247 | E | 1796 | 271.860 | M | | 10/09 ▸ 02/11 | 2045002803 | **•735287** | 640 430 | ALB |
| 1.8 CGI 16V | 204/.048/.049/.248 .249 | E | 1796 | 271.820 | A | | 10/09 ▸ 02/11 | 2045002203 | **•735285** | 451,5 640 | ALB |
| 1.8 CGI 16V | 204/.047/.247 | E | 1796 | 271.860 | A | | 10/09 ▸ 02/11 | 2045002803 | **•735287** | 640 430 | ALB |
| 1.8 i 16V | 204/.041/.046/.241 .246 | E | 1796 | 271.950,271.952 | M | + | 01/07 ▸ | 2045000303 | **•735139** | 451,5 640 | ALB |
| 2.5 i V6 24V | 204/.052/.085/.252 | E | 2496 | 272.911,272.921 | M | | 01/07 ▸ 02/11 | 2045002203 | **•735285** | 451,5 640 | ALB |
| 2.5 i V6 24V | 204/.052/.085/.252 | E | 2496 | 272.911,272.921 | A | | 01/07 ▸ 02/11 | 2045002803 | **•735287** | 640 430 | ALB |
| 2.5 i V6 24V | 204/.052/.085/.252 | E | 2496 | 272.911,272.921 | M | + | 01/07 ▸ | 2045000303 | **•735139** | 451,5 640 | ALB |
| 3.0 i V6 24V | 204/.054/.254 | E | 2996 | 272.947 | M | | 01/07 ▸ 02/11 | 2045002203 | **•735285** | 451,5 640 | ALB |
| 3.0 i V6 24V | 204/.054/.081/.254 | E | 2996 | 272.947,272.948 | A | | 01/07 ▸ 02/11 | 2045002803 | **•735287** | 640 430 | ALB |
| 3.0 i V6 24V | 204/.054/.254 | E | 2996 | 272.947 | M | + | 01/07 ▸ | 2045000303 | **•735139** | 451,5 640 | ALB |
| 3.0 CGI BE V6 24V<br>3.5 i V6 24V | 204/.056/.065/.087 .256 | E | 3498 | 272.961,272.971,272.982 | A | | 01/07 ▸ 02/11 | 2045002803 | **•735287** | 640 430 | ALB |
| 2.15 CDI BE 16V<br>184731 ▸ | 204.003 | D | 2143 | 651.911 | M | + | 10/08 ▸ | 2045001203 | **•735292** | 438 640 | ALB |
| 2.15 CDI 16V<br>2.15 CDI BE 16V<br>2.15 CDI BE 204 16V | 204/.001/.002/.003 .201/.202/.203 | D | 2143 | 651.911,651.913 | M | | 10/08 ▸ | 2045003603 | **•735292** | 438 640 | ALB |
| 2.15 CDI BE 16V<br>184731 ▸ | 204.003 | D | 2143 | 651.911 | A | + | 10/08 ▸ | 2045001203 | **•735292** | 438 640 | ALB |
| 2.15 CDI 16V<br>2.15 CDI BE 16V<br>2.15 CDI BE 204 16V | 204/.001/.002/.003 .082/.201/.202/.203 .282 | D | 2143 | 651.911,651.912,651.913 | A | | 10/08 ▸ | 2045003603 | **•735292** | 438 640 | ALB |
| 2.15 CDI 16V<br>2.15 CDI BE 16V | 204/.006/.007/.008 .207/.208 | D | 2148 | 646.811,646.812 | M | | 01/07 ▸ 02/11 | 2045002203 | **•735285** | 451,5 640 | ALB |
| 2.15 CDI 16V<br>2.15 CDI BE 16V | 204/.006/.007/.008 .207/.208 | D | 2148 | 646.811,646.812 | A | | 01/07 ▸ 02/11 | 2045002803 | **•735287** | 640 430 | ALB |
| 2.15 CDI 16V | 204/.207/.208 | D | 2148 | 646.811 | M | + | 09/07 ▸ | 2045000303 | **•735139** | 451,5 640 | ALB |
| 3.0 CDI V6 24V<br>184731 ▸ | 204/.022/.222 | D | 2987 | 642.960 | M | + | 06/08 ▸ | 2045001203 | **•735292** | 438 640 | ALB |
| 3.0 CDI V6 24V | 204/.025/.225 | D | 2987 | 642.830 | M | | 10/09 ▸ | 2045003603 | **•735292** | 438 640 | ALB |
| 3.0 CDI V6 24V<br>184731 ▸ | 204/.022/.089/.222 .289 | D | 2987 | 642.960,642.961 | A | + | 06/08 ▸ | 2045001203 | **•735292** | 438 640 | ALB |
| 3.0 CDI V6 24V | 204/.025/.092/.225 .292 | D | 2987 | 642.830,642.832 | A | | 10/09 ▸ | 2045003603 | **•735292** | 438 640 | ALB |

## CLC CLASS (203)

| | | | | | | | | | | | |
|---|---|---|---|---|---|---|---|---|---|---|---|
| 1.8 i 16V | | | 1796 | 203.746,203.741 | M | | 05/00 ▸ | 2035004503 | **•735144** | 414,5 649,4 | ALB |
| 2.1 CDI 16V | | | 2148 | 646.962,646.963 | M | | 05/00 ▸ | 2035004503 | **•735144** | 414,5 649,4 | ALB |

## CLK (208) (97>2003)

| | | | | | | | | | | | |
|---|---|---|---|---|---|---|---|---|---|---|---|
| CLK200 i | 208/.335/.435 | E | 1998 | 111.945 | M | + | 06/97 ▸ 01/03 | 2025002203 | **731805** | 615 432 | ALB |
| CLK200 i | 208/.335/.435 | E | 1998 | 111.945 | M | - | 06/97 ▸ 01/03 | 2025006103 | **731804** | 360 432 | ALM |

Radiator Radiateur Motorkühler Radiatore di raffreddamento Radiator Radyatör Radiador Радиатор vízhűtő Vodní chladič Radiator Ψυγείο



• **New** Nouveau **Nuevo** Novo **Nuovo** Nieuw **Neu** Nowość **Yeni** Новый Νέο **Nový**

# MERCEDES (.../...)

## CLK (208) (97>2003) (.../...)

| | | | CC | | | AC | | | OE | Valeo | DIM. | TECH |
|---|---|---|---|---|---|---|---|---|---|---|---|---|
| CLK200K i | 208/.345/.445 | E | 1998 | 111.944 | M | | | 06/97 ▸ 06/00 | 2025005203 | **732451** | 520 418 | ALB |
| CLK200 i | 208/.335/.435 | E | 1998 | 111.945 | A | + | | 06/97 ▸ 01/03 | 2025002203 | **731805** | 615 432 | ALB |
| CLK200 i | 208/.335/.435 | E | 1998 | 111.945 | A | - | | 06/97 ▸ 01/03 | 2025006103 | **731804** | 360 432 | ALM |
| CLK200K i | 208/.345/.445 | E | 1998 | 111.944 | A | | | 06/97 ▸ 06/00 | 2025005203 | **732451** | 520 418 | ALB |
| CLK230K i | 208/.347/.447 | E | 2295 | 111.975 | M | | | 06/97 ▸ 01/03 | 2025005203 | **732451** | 520 418 | ALB |
| CLK230K i | 208/.347/.447 | E | 2295 | 111.975 | A | | | 06/97 ▸ 01/03 | 2025005203 | **732451** | 520 418 | ALB |
| CLK320 i | 208/.365/.465 | E | 3199 | 112.940 | A | | | 06/97 ▸ 01/03 | 2025002203 | **731805** | 615 432 | ALB |
| CLK430 i | 208.370 | E | 4266 | 113.943 | A | | | 06/98 ▸ 02/02 | 2025002203 | **731805** | 615 432 | ALB |
| CLK55 i | 208.374 | E | 5439 | 113.984 | A | | | 06/99 ▸ 02/02 | 2025002203 | **731805** | 615 432 | ALB |

## CLK (209) (2002>)

| | | | | | | | | | | | | |
|---|---|---|---|---|---|---|---|---|---|---|---|---|
| CLK 200,CLK 200 i | 209/.342/.343/.442 | E | 1796 | 271.940,271.942 | M | + | | 03/02 ▸ 06/09 | 2035003403 | **732741** | 649,4 414 | ALB |
| CLK 200 i | 209.342 | E | 1796 | 271.940 | M | | | 03/02 ▸ 06/09 | 2035002503 | **732743** | 649,4 414,5 | ALB |
| CLK 200,CLK 200 i | 209/.343/.442 | E | 1796 | 271.940,271.942 | M | | | 03/02 ▸ 06/09 | 2035001003 | **732741** | 649,4 414 | ALB |
| CLK 200,CLK 200 i | 209/.341/.441/.442 | E | 1796 | 271.940,271.955 | M | | | 02/03 ▸ 06/09 | 2035000503 | **732741** | 649,4 414 | ALB |
| CLK 200,CLK 200 i | 209/.341/.441 | E | 1796 | 271.955 | M | | | 06/06 ▸ 06/09 | 2035003403 | **732741** | 649,4 414 | ALB |
| CLK 200,CLK 200 i | 209/.342/.343/.442 | E | 1796 | 271.940,271.942 | A | + | | 03/02 ▸ 06/09 | 2035003403 | **732741** | 649,4 414 | ALB |
| CLK 200,CLK 200 i | 209/.342/.343/.442 | E | 1796 | 271.940,271.942 | A | | | 03/02 ▸ 06/09 | 2035001003 | **732741** | 649,4 414 | ALB |
| CLK 200,CLK 200 i | 209/.341/.342/.343 .441/.442 | E | 1796 | 271.940,271.942,271.955 | A | | | 03/02 ▸ 06/09 | 2035000503 | **732741** | 649,4 414 | ALB |
| CLK 200,CLK 200 i | 209/.341/.441 | E | 1796 | 271.955 | A | | | 06/06 ▸ 06/09 | 2035003403 | **732741** | 649,4 414 | ALB |
| CLK 240 i | 209/.361/.461 | E | 2597 | 112.912 | M | + | | 03/02 ▸ 05/05 | 2035003403 | **732741** | 649,4 414 | ALB |
| CLK 240 i | 209/.361/.461 | E | 2597 | 112.912 | M | | | 03/02 ▸ 05/05 | 2035001003 | **732741** | 649,4 414 | ALB |
| CLK 240 i | 209.461 | E | 2597 | 112.912 | M | | | 02/03 ▸ 05/05 | 2035000503 | **732741** | 649,4 414 | ALB |
| CLK 240 i | 209/.361/.461 | E | 2597 | 112.912 | A | + | | 03/02 ▸ 05/05 | 2035003403 | **732741** | 649,4 414 | ALB |
| CLK 240 i | 209/.361/.461 | E | 2597 | 112.912 | A | | | 03/02 ▸ 05/05 | 2035001003 | **732741** | 649,4 414 | ALB |
| CLK 280 i | 209/.354/.454 | E | 2996 | 272.940 | M | + | | 01/05 ▸ 06/09 | 2035003403 | **732741** | 649,4 414 | ALB |
| CLK 280 i | 209/.354/.454 | E | 2996 | 272.940 | M | | | 01/05 ▸ 06/09 | 2035000503 | **732741** | 649,4 414 | ALB |
| CLK 280 i | 209.354 | E | 2996 | 272.940 | M | | | 01/05 ▸ 06/09 | 2035003903 | **732743** | 649,4 414,5 | ALB |
| CLK 280 i | 209/.354/.454 | E | 2996 | 272.940 | A | + | | 01/05 ▸ 06/09 | 2035003403 | **732741** | 649,4 414 | ALB |
| CLK 280 i | 209/.354/.454 | E | 2996 | 272.940 | A | | | 01/05 ▸ 06/09 | 2035000503 | **732741** | 649,4 414 | ALB |
| CLK 280 i | 209.354 | E | 2996 | 272.940 | A | | | 01/05 ▸ 06/09 | 2035003903 | **732743** | 649,4 414,5 | ALB |
| CLK 320 i | 209/.365/.465 | E | 3199 | 112.955 | A | + | | 03/02 ▸ 05/05 | 2035003403 | **732741** | 649,4 414 | ALB |
| CLK 320 i | 209/.365/.465 | E | 3199 | 112.955 | A | | | 03/02 ▸ 05/05 | 2035001003 | **732741** | 649,4 414 | ALB |
| CLK 350 i | 209/.356/.456 | E | 3498 | 272.960 | M | + | | 01/05 ▸ 06/09 | 2035003403 | **732741** | 649,4 414 | ALB |
| CLK 350 i | 209.356 | E | 3498 | 272.960 | M | | | 01/05 ▸ 06/09 | 2035003903 | **732743** | 649,4 414,5 | ALB |
| CLK 350 i | 209/.356/.456 | E | 3498 | 272.960 | M | | | 01/05 ▸ 06/09 | 2035000503 | **732741** | 649,4 414 | ALB |
| CLK 350 i | 209/.356/.456 | E | 3498 | 272.960 | A | + | | 01/05 ▸ 06/09 | 2035003403 | **732741** | 649,4 414 | ALB |
| CLK 350 i | 209.356 | E | 3498 | 272.960 | A | | | 01/05 ▸ 06/09 | 2035003903 | **732743** | 649,4 414,5 | ALB |
| CLK 350 i | 209/.356/.456 | E | 3498 | 272.960 | A | | | 01/05 ▸ 06/09 | 2035000503 | **732741** | 649,4 414 | ALB |
| CLK 500 i | 209/.375/.475 | E | 4966 | 113.968 | A | | | 03/02 ▸ 06/09 | 2035003903 | **732743** | 649,4 414,5 | ALB |
| CLK 55 AMG i | 209/.376/.476 | E | 5439 | 113.987 | A | | | 03/02 ▸ 06/09 | 2035002503 | **732743** | 649,4 414,5 | ALB |
| CLK 500 i | 209/.372/.472 | E | 5461 | 273.967 | A | | | 04/06 ▸ 06/09 | 2035002003 | **734941** | | |
| CLK 220 CDI | 209.308 | D | 2148 | 646.966 | M | + | | 06/05 ▸ 06/09 | 2035003403 | **732741** | 649,4 414 | ALB |
| CLK 220 CDI | 209.308 | D | 2148 | 646.966 | M | | | 06/05 ▸ 06/09 | 2035000503 | **732741** | 649,4 414 | ALB |
| CLK 220 CDI | 209.308 | D | 2148 | 646.966 | A | + | | 06/05 ▸ 06/09 | 2035003403 | **732741** | 649,4 414 | ALB |
| CLK 220 CDI | 209.308 | D | 2148 | 646.966 | A | | | 06/05 ▸ 06/09 | 2035000503 | **732741** | 649,4 414 | ALB |
| CLK 270 CDI | 209.316 | D | 2685 | 612.967 | M | | | 03/02 ▸ 05/05 | 2035003903 | **732743** | 649,4 414,5 | ALB |
| CLK 270 CDI | 209.316 | D | 2685 | 612.967 | A | | | 03/02 ▸ 05/05 | 2035002503 | **732743** | 649,4 414,5 | ALB |
| CLK 320 CDI | 209.320 | D | 2987 | 642.910 | M | + | | 06/05 ▸ 06/09 | 2035002003 | **734941** | | |
| CLK 320 CDI | 209/.320/.420 | D | 2987 | 642.910 | A | + | | 06/05 ▸ 06/09 | 2035002003 | **734941** | | |

## CLS (2004>2010)

| | | | | | | | | | | | | |
|---|---|---|---|---|---|---|---|---|---|---|---|---|
| CLS350 i | 219.357 | E | 3498 | 272.985 | A | | | 07/04 ▸ 01/08 | 2115000102 | | 640 596 | |
| CLS350 i | 219/.356/.372 | E | 3498 | 272.964 | A | | | 07/04 ▸ 01/08 | 2115001302 | **734805** | 640 450 | ALB |
| CLS350 i | 219.372 | E | 3498 | 272.964 | A | | | 07/05 ▸ 01/08 | 2115003402 | **•735382** | 640 470 | ALB |
| CLS500 i | 219.375 | E | 4966 | 113.967 | A | | | 07/04 ▸ 01/08 | 2115003102 | **732849** | 640 470 | ALB |
| CLS55 i | 219.376 | E | 5439 | 113.990 | A | | | 01/05 ▸ 01/08 | 2115003202 | **732855** | 640 470 | ALB |
| CLS63 i | 219.377 | E | 6208 | 156.983 | A | | | 04/06 ▸ 01/08 | 2115003202 | **732855** | 640 470 | ALB |
| CLS 320CDI CDI | 219.322 | D | 2987 | 642.920 | A | | | 06/05 ▸ 01/08 | 2115003402 | **•735382** | 640 470 | ALB |
| CLS 320CDI CDI | 219.322 | D | 2987 | 642.920 | A | | | 06/05 ▸ 01/08 | 2115003502 | **•734938** | 782 488 | ALB |

## CLS (2008>)

| | | | | | | | | | | | | |
|---|---|---|---|---|---|---|---|---|---|---|---|---|
| 3.0 i V6 24V | 219.354 | E | 2996 | 272.943 | A | | | 02/08 ▸ 06/09 | 2115001302 | **734805** | 640 450 | ALB |
| 3.5 i V6 24V | 219.357 | E | 3498 | 272.985 | A | | | 02/08 ▸ 01/11 | 2115002302 | **732870** | 640 476 | ALM |
| 5.5 i V8 32V | 219.372 | E | 5461 | 273.960 | A | | | 02/08 ▸ 01/11 | 2115003402 | **•735382** | 640 470 | ALB |
| 6.2 i V8 32V | 219.377 | E | 6208 | 156.983 | A | | | 02/08 ▸ 01/11 | 2115003202 | **732855** | 640 470 | ALB |
| 3.0 CDI V6 24V | 219.322 | D | 2987 | 642.920 | A | | | 02/08 ▸ 06/09 | 2115003402 | **•735382** | 640 470 | ALB |

## CLS (218) (2010>)

| | | | | | | | | | | | | |
|---|---|---|---|---|---|---|---|---|---|---|---|---|
| 2.5 CGI V6-306 24V | 218.359 | E | 2498 | 276.952 | A | | | 09/10 ▸ | 2045003603 | **•735292** | 438 640 | ALB |

# MERCEDES (.../...)

## CLS (218) (2010>) (.../...)

| | | | CC | | | AC | | | OE | Valeo | DIM. | TECH |
|---|---|---|---|---|---|---|---|---|---|---|---|---|
| 4.7 ti V8-408 32V | 218/.373/.391 | E | 4663 | 278.922 | A | | | 01/11 ▸ | 2115003102 | **732849** | 640 470 | ALB |
| 5.5 ti V8-525 32V<br>5.5 ti V8-557 32V | 218.374 | E | 5461 | 157.980,157.981 | A | | | 01/11 ▸ | 2115003102 | **732849** | 640 470 | ALB |
| 3.0 CDI V6-265 24V | 218.323 | D | 2987 | 642.853 | A | | | 09/10 ▸ | 2045003603 | **•735292** | 438 640 | ALB |

## E CLASS (124)

| | | | | | | | | | | | | |
|---|---|---|---|---|---|---|---|---|---|---|---|---|
| E200 i,E200T i | 124/.019/.040/.060<br>.079 | E | 1998 | 111.940 | M | + | | 07/93 ▸ 03/98 | 1245006303 | **732460** | 488 488 | ALB |
| E200 i,E200T i | 124/.019/.040/.060<br>.079 | E | 1998 | 111.940 | M | | | 07/93 ▸ 03/98 | 1245008403 | | 292 340 | ALB |
| E200 i,E200T i | 124/.019/.040/.079 | E | 1998 | 111.940 | M | | | 07/93 ▸ 06/97 | 1245008303 | | 292 340 | ALB |
| E200 i,E200T i | 124/.019/.040/.060<br>.079 | E | 1998 | 111.940 | A | + | | 07/93 ▸ 03/98 | 1245006303 | **732460** | 488 488 | ALB |
| E200 i,E200T i | 124/.019/.040/.060<br>.079 | E | 1998 | 111.940 | A | | | 07/93 ▸ 03/98 | 1245008403 | | 292 340 | ALB |
| E220 i | 124/.042/.062 | E | 2199 | 111.960 | M | + | | 07/93 ▸ 03/98 | 1245006303 | **732460** | 488 488 | ALB |
| E220 i | 124/.042/.062 | E | 2199 | 111.960 | M | | | 07/93 ▸ 03/98 | 1245006003 | | 410 368 | ALB |
| E220 i | 124/.042/.062 | E | 2199 | 111.960 | A | + | | 07/93 ▸ 03/98 | 1245006303 | **732460** | 488 488 | ALB |
| E220 i | 124/.042/.062 | E | 2199 | 111.960 | A | | | 07/93 ▸ 03/98 | 1245006003 | | 410 368 | ALB |
| E280L i | 124.029 | E | 2799 | 104.942 | M | + | | 07/93 ▸ 09/95 | 1245009003 | **819377** | 533 487 | CBS |
| E280L i | 124.029 | E | 2799 | 104.942 | M | | | 07/93 ▸ 09/95 | 1245001503 | | 450 368 | ALB |
| E280L i | 124.029 | E | 2799 | 104.942 | A | + | | 07/93 ▸ 09/95 | 1245009003 | **819377** | 533 487 | CBS |
| E280L i | 124.029 | E | 2799 | 104.942 | A | | | 07/93 ▸ 09/95 | 1245001503 | | 450 368 | ALB |
| E300 i,E300T i | 124/.230/.290 | E | 2962 | 103.985 | M | + | | 07/93 ▸ 02/96 | 1245009003 | **819377** | 533 487 | CBS |
| E300 i,E300T i | 124/.230/.290 | E | 2962 | 103.985 | M | | | 07/93 ▸ 02/96 | 1245001503 | | 450 368 | ALB |
| E300 i,E300T i | 124/.230/.290 | E | 2962 | 103.985 | A | + | | 07/93 ▸ 02/96 | 1245009003 | **819377** | 533 487 | CBS |
| E300 i,E300T i | 124/.230/.290 | E | 2962 | 103.985 | A | | | 07/93 ▸ 02/96 | 1245001503 | | 450 368 | ALB |
| E320 i,E320T i | 124/.052/.066/.092 | E | 3199 | 104.992 | M | + | | 07/93 ▸ 03/98 | 1245009003 | **819377** | 533 487 | CBS |
| E320 i,E320T i | 124/.052/.066/.092 | E | 3199 | 104.992 | M | | | 07/93 ▸ 03/98 | 1245001503 | | 450 368 | ALB |
| E320 i,E320T i | 124/.052/.066/.092 | E | 3199 | 104.992 | A | + | | 07/93 ▸ 03/98 | 1245009003 | **819377** | 533 487 | CBS |
| E320 i,E320T i | 124/.052/.066/.092 | E | 3199 | 104.992 | A | | | 07/93 ▸ 03/98 | 1245001503 | | 450 368 | ALB |
| E36 i | 124/.052/.066 | E | 3606 | C36AMG | M | + | | 05/94 ▸ 03/98 | 1245009003 | **819377** | 533 487 | CBS |
| E36 i | 124/.052/.066 | E | 3606 | C36AMG | M | | | 05/94 ▸ 03/98 | 1245001503 | | 450 368 | ALB |
| E420 i | 124.034 | E | 4196 | 119.975 | A | | | 07/93 ▸ 09/95 | 1245001402 | **732458** | 612 488 | ALB |
| E500 i | 124.036 | E | 4973 | 119.974 | A | | | 07/93 ▸ 09/95 | 1245000302 | **732458** | 612 488 | ALB |
| E200D D | 124.120 | D | 1997 | 601.912 | M | + | TSW | 07/93 ▸ 09/95 | 1245009803 | **819387** | 533 488 | ALB |
| E200D D | 124.120 | D | 1997 | 601.912 | M | | TSW | 07/93 ▸ 09/95 | 1245004903 | **883860** | 533 377,5 | ALM |
| E200D D | 124.120 | D | 1997 | 601.912 | A | | TSW | 07/93 ▸ 09/95 | 1245009803 | **819387** | 533 488 | ALB |
| E250D D,E250DL D,E250TD D | 124/.126/.129/.186 | D | 2497 | 605.911 | M | | | 07/93 ▸ 02/96 | 1245002002 | **732591** | 533 485 | ALB |
| E250TD TD | 124/.128/.188 | D | 2497 | 602.962 | M | | TSW | 07/93 ▸ 02/96 | 1245009803 | **819387** | 533 488 | ALB |
| E250D D,E250DL D,E250TD D | 124/.126/.129/.186 | D | 2497 | 605.911 | A | | | 07/93 ▸ 02/96 | 1245002002 | **732591** | 533 485 | ALB |
| E250TD TD | 124/.128/.188 | D | 2497 | 602.962 | A | | TSW | 07/93 ▸ 02/96 | 1245009803 | **819387** | 533 488 | ALB |
| E300TD D | 124.191 | D | 2996 | 606.910 | M | | | 07/93 ▸ 02/96 | 1245002002 | **732591** | 533 485 | ALB |
| E300TD TD | 124/.133/.193/.333<br>.393 | D | 2996 | 603.960,603.963 | A | | | 07/93 ▸ 02/96 | 1245000002 | | 612 488 | ALB |
| E300TD D | 124.191 | D | 2996 | 606.910 | A | | | 07/93 ▸ 02/96 | 1245002002 | **732591** | 533 485 | ALB |

## E CLASS (210)

| | | | | | | | | | | | | |
|---|---|---|---|---|---|---|---|---|---|---|---|---|
| E200 i | 210.035 | E | 1998 | 111.942 | M | +/- | | 04/95 ▸ 03/02 | 2105003003 | **731294** | 641 488,5 | ALM |
| E200 i,E200L i | 210/.045/.048/.245<br>.248 | E | 1998 | 111.947,111.957 | M | + | | 04/95 ▸ 03/03 | 2105006003 | | 640 456 | ALM |
| E200 i | 210/.045/.245 | E | 1998 | 111.947 | M | + | | 04/95 ▸ | 2105004603 | | 640 456 | ALM |
| E200 i | 210.235 | E | 1998 | 111.942 | M | + | | 03/96 ▸ 03/03 | 2105003003 | **731294** | 641 488,5 | ALM |
| E200 i | 210.235 | E | 1998 | 111.942 | M | + | | 03/96 ▸ 03/03 | 2025006103 | **731804** | 360 432 | ALM |
| E200 i | 210.235 | E | 1998 | 111.942 | M | + | | 03/97 ▸ 06/99 | 2025002203 | **731805** | 615 432 | ALB |
| E200 i | 210.035 | E | 1998 | 111.942 | M | - | | 04/95 ▸ 03/02 | 2025006103 | **731804** | 360 432 | ALM |
| E200 i | 210.235 | E | 1998 | 111.942 | M | | | 03/96 ▸ 03/97 | 2025003203 | **731808** | 615 422 | ALB |
| E200 i | 210.235 | E | 1998 | 111.942 | M | | | 03/96 ▸ 03/03 | 2025002203 | **731805** | 615 432 | ALB |
| E200 i | 210.235 | E | 1998 | 111.942 | M | | | 03/96 ▸ 06/99 | 2105003203 | **732462** | 641 488 | ALB |
| E200 i | 210.035 | E | 1998 | 111.942 | A | +/- | | 04/95 ▸ 03/02 | 2105003003 | **731294** | 641 488,5 | ALM |
| E200 i | 210/.045/.245 | E | 1998 | 111.947 | A | + | | 04/95 ▸ | 2105004603 | | 640 456 | ALM |
| E200 i,E200L i | 210/.045/.048/.245<br>.248 | E | 1998 | 111.947,111.957 | A | + | | 04/95 ▸ 03/03 | 2105006003 | | 640 456 | ALM |
| E200 i | 210/.035/.235 | E | 1998 | 111.942 | A | + | | 04/95 ▸ 03/03 | 2105003003 | **731294** | 641 488,5 | ALM |
| E200 i | 210.235 | E | 1998 | 111.942 | A | + | | 03/96 ▸ 03/03 | 2025006103 | **731804** | 360 432 | ALM |
| E200 i | 210.035 | E | 1998 | 111.942 | A | - | | 04/95 ▸ 03/02 | 2025006103 | **731804** | 360 432 | ALM |
| E200 i | 210.235 | E | 1998 | 111.942 | A | | | 03/96 ▸ 03/97 | 2025003203 | **731808** | 615 422 | ALB |
| E200 i | 210.235 | E | 1998 | 111.942 | A | | | 03/97 ▸ 03/03 | 2025002203 | **731805** | 615 432 | ALB |
| E230 i | 210.037 | E | 2295 | 111.970 | M | +/- | | 04/95 ▸ 06/99 | 2105003003 | **731294** | 641 488,5 | ALM |
| E230 i | 210.237 | E | 2295 | 111.970 | M | + | | 03/96 ▸ 03/97 | 2025003203 | **731808** | 615 422 | ALB |

Radiator Radiateur Motorkühler Radiatore di raffreddamento Radiator Radyatör Radiador Радиатор vízhűtő Vodní chladič Radiator Ψυγείο



• **New** Nouveau **Nuevo** Novo **Nuovo** Nieuw **Neu** Nowość **Yeni** Новый Νέο **Nový**

## E CLASS (210) (.../...)

| Type Ctr. | | | CC | | | AC | | | OE | Valeo | DIM. | TECH |
|---|---|---|---|---|---|---|---|---|---|---|---|---|
| E230 i | 210.237 | E | 2295 | 111.970 | M | + | | 03/96 ▸ 06/99 | 2105003003 | 731294 | 641 488,5 | ALM |
| E230 i | 210.237 | E | 2295 | 111.970 | M | + | | 03/96 ▸ 06/99 | 2025006103 | 731804 | 360 432 | ALM |
| E230 i | 210.237 | E | 2295 | 111.970 | M | + | | 03/97 ▸ 06/99 | 2025002203 | 731805 | 615 432 | ALB |
| E230 i | 210.037 | E | 2295 | 111.970 | M | - | | 04/95 ▸ 06/99 | 2025006103 | 731804 | 360 432 | ALM |
| E230 i | 210.037 | E | 2295 | 111.970 | A | +/- | | 04/95 ▸ 06/99 | 2105003003 | 731294 | 641 488,5 | ALM |
| E230 i | 210/.037/.237 | E | 2295 | 111.970 | A | + | | 04/95 ▸ 06/99 | 2105003003 | 731294 | 641 488,5 | ALM |
| E230 i | 210.237 | E | 2295 | 111.970 | A | + | | 03/96 ▸ 06/99 | 2025006103 | 731804 | 360 432 | ALM |
| E230 i | 210.237 | E | 2295 | 111.970 | A | + | | 03/96 ▸ 03/97 | 2025003203 | 731808 | 615 422 | ALB |
| E230 i | 210.237 | E | 2295 | 111.970 | A | + | | 03/97 ▸ 06/99 | 2025002203 | 731805 | 615 432 | ALB |
| E230 i | 210.037 | E | 2295 | 111.970 | A | - | | 04/95 ▸ 06/99 | 2025006103 | 731804 | 360 432 | ALM |
| E240 i | 210/.061/.261 | E | 2398 | 112.911 | M | + | | 04/95 ▸ 03/03 | 2105002803 | 731294 | 641 488,5 | ALM |
| E240 i | 210/.061/.261 | E | 2398 | 112.911 | A | + | | 04/95 ▸ 06/99 | 2105002803 | 731294 | 641 488,5 | ALM |
| E240 i | 210/.062/.262 | E | 2597 | 112.914 | M | + | | 06/99 ▸ 03/03 | 2105002803 | 731294 | 641 488,5 | ALM |
| E240 i | 210/.062/.262 | E | 2597 | 112.914 | A | + | | 06/99 ▸ 03/03 | 2105002803 | 731294 | 641 488,5 | ALM |
| E280 i,E280L i | 210/.063/.263/.663 | E | 2799 | 112.921 | M | + | | 04/95 ▸ 03/03 | 2105002803 | 731294 | 641 488,5 | ALM |
| E280 i | 210.053 | E | 2799 | 104.945 | M | + | | 04/95 ▸ 06/99 | 2105000903 | 731292 | 641 488,5 | ALM |
| E280 i,E280L i | 210/.063/.081/.263 .281/.663 | E | 2799 | 112.921 | A | + | | 04/95 ▸ 03/03 | 2105002803 | 731294 | 641 488,5 | ALM |
| E280 i | 210.053 | E | 2799 | 104.945 | A | + | | 04/95 ▸ 06/99 | 2105000903 | 731292 | 641 488,5 | ALM |
| E320 i | 210/.065/.082/.265 .282 | E | 3199 | 112.941 | A | + | | 04/95 ▸ 03/03 | 2105002803 | 731294 | 641 488,5 | ALM |
| E320 i | 210.055 | E | 3199 | 104.995 | A | + | | 04/95 ▸ 06/99 | 2105000903 | 731292 | 641 488,5 | ALM |
| E420 i | 210/.072/.272 | E | 4196 | 119.985 | A | + | | 04/95 ▸ 06/99 | 2105001203 | 732446 | 641 489 | ALB |
| E430 i | 210/.070/.083/.270 .283 | E | 4266 | 113.940 | A | + | | 03/96 ▸ 03/02 | 2105001203 | 732446 | 641 489 | ALB |
| E430 i B089547, X037741 ▸ | 210/.083/.283 | E | 4266 | 113.940 | A | + | | 06/99 ▸ 03/03 | 2105006803 | | 641 496 | ALB |
| E430 i B089547, X037741 ▸ | 210/.070/.083/.270 .283 | E | 4266 | 113.940 | A | | | > ▸ 03/03 | 2105006803 | | 641 496 | ALB |
| E430 i ▸ B089546, X037740 | 210/.070/.083/.270 .283 | E | 4266 | 113.940 | A | | | 06/99 ▸ | 2105005503 | | 641 496 | ALB |
| E430 i ▸ X037740, B089546 | 210/.083/.283 | E | 4266 | 113.940 | A | + | | 07/99 ▸ | 2105005503 | | 641 496 | ALB |
| E50 i | 210.072 | E | 4973 | 119.AMG | A | + | | 03/96 ▸ 06/99 | 2105001203 | 732446 | 641 489 | ALB |
| E55 i | 210.274 | E | 5439 | 113.980 | A | + | | 03/96 ▸ 06/99 | 2105001203 | 732446 | 641 489 | ALB |
| E200D D | 210.003 | D | 1998 | 604.917 | M | + | | 04/95 ▸ 06/99 | 2105000803 | 731293 | 641 488,5 | ALM |
| E200D D | 210.003 | D | 1998 | 604.917 | M | | | 04/95 ▸ 06/99 | 2105002803 | 731294 | 641 488,5 | ALM |
| E200D D | 210.003 | D | 1998 | 604.917 | A | + | | 04/95 ▸ 06/99 | 2105002803 | 731294 | 641 488,5 | ALM |
| E200 CDI,E220 CDI | 210/.006/.007/.206 | D | 2148 | 611.961 | M | + | | 03/96 ▸ | 2105005303 | | 641 496 | ALB |
| E200 CDI,E220 CDI | 210/.006/.007/.206 | D | 2148 | 611.961 | A | + | | 03/96 ▸ | 2105005303 | | 641 496 | ALB |
| E220D D | 210.004 | D | 2155 | 604.912 | M | + | | 04/95 ▸ 06/99 | 2105002803 | 731294 | 641 488,5 | ALM |
| E220D D | 210.004 | D | 2155 | 604.912 | A | + | | 04/95 ▸ 06/99 | 2105002803 | 731294 | 641 488,5 | ALM |
| E250D D,E250DL D | 210/.010/.210/.610 | D | 2497 | 605.912 | M | + | | 04/95 ▸ 06/99 | 2105002803 | 731294 | 641 488,5 | ALM |
| E250TD TD | 210/.015/.215 | D | 2497 | 605.962 | M | + | | 04/95 ▸ 06/99 | 2105004903 | | 641 488 | ALB |
| E250D D,E250DL D | 210/.010/.210/.610 | D | 2497 | 605.912 | A | + | | 04/95 ▸ 06/99 | 2105002803 | 731294 | 641 488,5 | ALM |
| E270 CDI | 210/.016/.216 | D | 2685 | 612.961 | M | + | | 06/99 ▸ 03/03 | 2105005803 | 734803 | 641 488 | ALB |
| E270 CDI | 210/.216/.616 | D | 2685 | 612.961 | A | + | | 06/99 ▸ 03/03 | 2105005803 | 734803 | 641 488 | ALB |
| E290TD TD,E290TDL TD | 210/.017/.217/.617 | D | 2874 | 602.982 | M | + | | 04/95 ▸ 06/99 | 2105003403 | 735231 | 640 485 | ALB |
| E290TD TD,E290TDL TD | 210/.017/.217/.617 | D | 2874 | 602.982 | A | + | | 04/95 ▸ 06/99 | 2105003403 | 735231 | 640 485 | ALB |
| E300D D | 210.020 | D | 2996 | 606.912 | M | + | | 04/95 ▸ 06/99 | 2105001203 | 732446 | 641 489 | ALB |
| E300TD TD | 210/.025/.225 | D | 2996 | 606.962 | A | + | | 04/95 ▸ 06/99 | 2105003203 | 732462 | 641 488 | ALB |
| E300D D | 210.020 | D | 2996 | 606.912 | A | + | | 04/95 ▸ 06/99 | 2105006503 | 735231 | 640 485 | ALB |
| E300D D | 210.020 | D | 2996 | 606.912 | A | + | | 04/95 ▸ 06/99 | 2105001203 | 732446 | 641 489 | ALB |
| E300D D | 210.020 | D | 2996 | 606.912 | A | | | 04/95 ▸ 06/99 | 2105001203 | 732446 | 641 489 | ALB |
| E320 CDI | 210/.026/.226 | D | 3224 | 613.961 | A | + | | 06/99 ▸ 03/03 | 2105005803 | 734803 | 641 488 | ALB |

## E CLASS (211) (2002>2006)

| | | | | | | | | | | | | |
|---|---|---|---|---|---|---|---|---|---|---|---|---|
| E 200 i | 211/.042/.242 | E | 1796 | 271.941 | M | + | | 09/02 ▸ 03/06 | 2115002302 | 732870 | 640 476 | ALM |
| E 200 i | 211/.042/.242 | E | 1796 | 271.941 | M | | | 09/02 ▸ | 2115000202 | 732849 | 640 470 | ALB |
| E 200 i | 211.242 | E | 1796 | 271.941 | M | | | 01/03 ▸ 03/06 | 2115003102 | 732849 | 640 470 | ALB |
| E 200 i | 211/.042/.242 | E | 1796 | 271.941 | A | + | | 09/02 ▸ 03/06 | 2115002302 | 732870 | 640 476 | ALM |
| E 200 i | 211/.042/.242 | E | 1796 | 271.941 | A | | | 09/02 ▸ | 2115000202 | 732849 | 640 470 | ALB |
| E 200 i | 211.242 | E | 1796 | 271.941 | A | | | 01/03 ▸ 03/06 | 2115003102 | 732849 | 640 470 | ALB |
| E 240 i | 211/.061/.261 | E | 2597 | 112.913 | M | + | | 03/02 ▸ 05/05 | 2115000102 | | 640 596 | |
| E 240 i | 211/.061/.080/.261 .280 | E | 2597 | 112.913,112.917 | A | + | | 03/02 ▸ 06/05 | 2115000102 | | 640 596 | |
| E 280 i | 211/.054/.254 | E | 2996 | 272.943 | M | + | | 06/05 ▸ 03/06 | 2115001302 | 734805 | 640 450 | ALB |

# MERCEDES (.../...)

## E CLASS (211) (2002>2006) (.../...)

| Type Ctr. | | CC | | AC | | 2+3 | OE | Valeo | DIM. | TECH |
|---|---|---|---|---|---|---|---|---|---|---|
| E 280 i 211/.054/.092/.254 .292 | E | 2996 | 272.943,272.944 | A | + | 06/05 ▸ 03/06 | 2115001302 | **734805** | 640 450 | ALB |
| E 320 i 211/.065/.082/.265 .282 | E | 3199 | 112.949,112.954 | A | + | 03/02 ▸ 03/06 | 2115000102 | | 640 596 | |
| E 320 i 211.065 | E | 3199 | 112.949 | A | | 03/02 ▸ | 2115000202 | **732849** | 640 470 | ALB |
| E 350 i 211.056 | E | 3498 | 272.964 | M | + | 07/04 ▸ 03/06 | 2115000102 | | 640 596 | |
| E 350 i 211/.056/.087/.256 .287 | E | 3498 | 272.964,272.972 | A | + | 07/04 ▸ 03/06 | 2115000102 | | 640 596 | |
| E 350 i 211/.087/.287 | E | 3498 | 272.972 | A | | 07/04 ▸ 03/06 | 2115001302 | **734805** | 640 450 | ALB |
| E 500 i 211/.070/.083/.270 .283 | E | 4966 | 113.967,113.969 | A | + | 03/02 ▸ 03/06 | 2115003102 | **732849** | 640 470 | ALB |
| E 500 i 211.070 | E | 4966 | 113.967 | A | | 03/02 ▸ | 2115000202 | **732849** | 640 470 | ALB |
| E 55 i 211/.076/.276 | E | 5439 | 113.990 | A | + | 07/02 ▸ 03/06 | 2115003202 | **732855** | 640 470 | ALB |
| E 55 i 211/.076/.276 | E | 5439 | 113.990 | A | | 07/02 ▸ | 2115000802 | **732855** | 640 470 | ALB |
| E 200 CDI,E 220 CDI 211/.004/.006/.206 .606 | D | 2148 | 646.951,646.961 | M | + | 03/02 ▸ 03/06 | 2115001302 | **734805** | 640 450 | ALB |
| E 200 CDI 211.004 | D | 2148 | 646.951 | M | | 07/02 ▸ 03/06 | 2115001302 | **734805** | 640 450 | ALB |
| E 200 CDI,E 220 CDI 211/.004/.006/.206 .606 | D | 2148 | 646.951,646.961 | A | + | 03/02 ▸ 03/06 | 2115001302 | **734805** | 640 450 | ALB |
| E 200 CDI 211.004 | D | 2148 | 646.951 | A | | 07/02 ▸ 03/06 | 2115001302 | **734805** | 640 450 | ALB |
| E 270 CDI 211/.016/.216/.616 | D | 2685 | 647.961 | M | + | 03/02 ▸ 05/05 | 2115003102 | **732849** | 640 470 | ALB |
| E 270 CDI 211/.016/.216/.616 | D | 2685 | 647.961 | M | | 03/02 ▸ | 2115000202 | **732849** | 640 470 | ALB |
| E 270 CDI 211/.016/.216/.616 | D | 2685 | 647.961 | A | + | 03/02 ▸ 05/05 | 2115003102 | **732849** | 640 470 | ALB |
| E 270 CDI 211/.016/.216/.616 | D | 2685 | 647.961 | A | | 03/02 ▸ | 2115000202 | **732849** | 640 470 | ALB |
| E 280 CDI 211/.020/.220 | D | 2987 | 642.920 | M | + | 06/05 ▸ 03/06 | 2115003402 | •**735382** | 640 470 | ALB |
| E 280 CDI,E 320 CDI 211/.084/.089/.284 .289 | D | 2987 | 642.921 | A | + | 06/05 ▸ 03/06 | 2115003202 | **732855** | 640 470 | ALB |
| E 280 CDI,E 320 CDI 211/.020/.022/.220 .222/.620 | D | 2987 | 642.920 | A | + | 06/05 ▸ 03/06 | 2115003402 | •**735382** | 640 470 | ALB |
| E 280 CDI,E 320 CDI 211/.084/.089/.284 .289 | D | 2987 | 642.921 | A | | 06/05 ▸ 03/06 | 2115003402 | •**735382** | 640 470 | ALB |
| E 280 CDI,E 320 CDI 211/.023/.026/.223 .226 | D | 3222 | 648.961 | A | + | 03/02 ▸ 05/05 | 2115003202 | **732855** | 640 470 | ALB |
| E 280 CDI,E 320 CDI 211/.023/.026/.223 .226 | D | 3222 | 648.961 | A | | 03/02 ▸ | 2115000802 | **732855** | 640 470 | ALB |
| E 400 CDI 211.028 | D | 3996 | 628.961 | A | + | 03/04 ▸ 03/06 | 2115003202 | **732855** | 640 470 | ALB |
| E 400 CDI 211.028 | D | 3996 | 628.961 | A | | 03/04 ▸ | 2115000802 | **732855** | 640 470 | ALB |

## E CLASS (211) (2006>2009)

| | | | | | | | | | | |
|---|---|---|---|---|---|---|---|---|---|---|
| 1.8 i 16V 211.042 | F | 1796 | 271.941 | A | | 04/06 ▸ 03/09 | 2115002302 | **732870** | 640 476 | ALM |
| 1.8 i 16V 211/.041/.241 | E | 1796 | 271.956 | M | + | 04/06 ▸ 11/09 | 2115002302 | **732870** | 640 476 | ALM |
| 1.8 i 16V 211/.041/.241 | E | 1796 | 271.956 | A | + | 04/06 ▸ 11/09 | 2115002302 | **732870** | 640 476 | ALM |
| 3.0 i V6 24V 211/.054/.092/.254 .292 | E | 2996 | 272.943,272.944 | A | | 04/06 ▸ 11/09 | 2115001302 | **734805** | 640 450 | ALB |
| 3.5 CGI V6 24V 211.057 | E | 3498 | 272.985 | A | | 09/07 ▸ 03/09 | 2115003102 | **732849** | 640 470 | ALB |
| 5.4 i V8 32V 211/.072/.090/.272 .290 | E | 5461 | 273.960,273.962 | A | | 04/06 ▸ 11/09 | 2115003402 | •**735382** | 640 470 | ALB |
| 6.2 i V8 32V 211/.077/.277 | E | 6208 | 156.983 | A | + | 04/06 ▸ 11/09 | 2115003202 | **732855** | 640 470 | ALB |
| 2.1 CDI 16V 211.007 | D | 2148 | 646.820 | M | + | 04/06 ▸ 03/09 | 2115001302 | **734805** | 640 450 | ALB |
| 2.1 CDI 16V 211/.008/.208 | D | 2148 | 646.821 | M | + | 04/06 ▸ 11/09 | 2115002302 | **732870** | 640 476 | ALM |
| 2.1 CDI 16V 211.207 | D | 2148 | 646.820 | M | | 04/06 ▸ 11/09 | 2115001302 | **734805** | 640 450 | ALB |
| 2.1 CDI 16V 211/.008/.208/.608 | D | 2148 | 646.821 | A | + | 04/06 ▸ 11/09 | 2115002302 | **732870** | 640 476 | ALM |
| 2.1 CDI 16V 211.007 | D | 2148 | 646.820 | A | + | 04/06 ▸ 03/09 | 2115001302 | **734805** | 640 450 | ALB |
| 2.1 CDI 16V 211.207 | D | 2148 | 646.820 | A | | 04/06 ▸ 11/09 | 2115001302 | **734805** | 640 450 | ALB |
| 3.0 CDI V6 24V 211/.020/.220 | D | 2987 | 642.920 | M | | 04/06 ▸ 11/09 | 2115003402 | •**735382** | 640 470 | ALB |
| 3.0 CDI V6 24V 211/.020/.022/.024 .084/.089/.220/.222/.284/.289 | D | 2987 | 642.920,642.921 | A | | 04/06 ▸ 11/09 | 2115003402 | •**735382** | 640 470 | ALB |
| 4.0 CDI V8 32V 211.029 | D | 3996 | 629.910 | A | + | 04/06 ▸ 03/09 | 2115003202 | **732855** | 640 470 | ALB |

## E CLASS (212) (2009>)

| | | | | | | | | | | |
|---|---|---|---|---|---|---|---|---|---|---|
| 1.8 CGI 184 16V 1.8 CGI 204 16V 207/.347 ; 212/.047 .048/.247/.248 | E | 1796 | 271.820,271.860 | M | | 03/09 ▸ | 2045002803 | •**735287** | 640 430 | ALB |
| 1.8 CGI 184 16V 1.8 CGI 204 16V 207/.347 ; 212/.047 .048/.247/.248 | E | 1796 | 271.820,271.860 | A | | 03/09 ▸ | 2045002803 | •**735287** | 640 430 | ALB |
| 3.5 CGI V6 24V 3.5 i V6 24V 207/.356/.357 ; 212 .056/.087 | E | 3498 | 272.977,272.980,272.982 272.988 | A | | 03/09 ▸ | 2045003603 | •**735292** | 438 640 | ALB |
| 3.5 CGI V6 24V 3.5 i V6 24V 207/.356/.357 ; 212 .056/.057/.087/.256 .257/.287 | E | 3498 | 272.977,272.980,272.982 272.983,272.988 | A | | 03/09 ▸ | 2045002803 | •**735287** | 640 430 | ALB |

Radiator Radiateur Motorkühler Radiatore di raffreddamento Radiator Radyatör Radiador Радиатор vízhűtő Vodní chladič Radiator Ψυγείο



• **New** Nouveau **Nuevo** Novo **Nuovo** Nieuw **Neu** Nowość **Yeni** Новый Νέο **Novy**

| | | CC | | AC | | | OE | Valeo | DIM. | TECH |
|---|---|---|---|---|---|---|---|---|---|---|
| **E CLASS (212) (2009>) (.../...)** | | | | | | | | | | |
| 5.5 i V8 32V 207/.372 ; 212/.072 .090/.272 | E | 5461 | 273.966,273.970,273.971 | A | | | 03/09 ▸ | 2045003603 | •735292 | 438 640 | ALB |
| 2.1 CDI 136 16V 207/.302/.303 ; 212 .002/.003/.005/.202 .203/.205<br>2.1 CDI 170 16V<br>2.1 CDI 204 16V | D | 2143 | 651.911,651.924,651.925 | M | | | 03/09 ▸ | 2045003603 | •735292 | 438 640 | ALB |
| 2.1 CDI 136 16V 207/.302/.303 ; 212 .002/.003/.005/.202 .203/.205<br>2.1 CDI 170 16V<br>2.1 CDI 204 16V | D | 2143 | 651.911,651.924,651.925 | A | | | 03/09 ▸ | 2045003603 | •735292 | 438 640 | ALB |
| 3.0 CDI V6 24V 212/.024/.025/.225 | D | 2987 | 642.850 | M | | | 03/09 ▸ | 2045003603 | •735292 | 438 640 | ALB |
| 3.0 CDI V6 24V 207/.322 ; 212/.024 .025/.224/.225/.289 | D | 2987 | 642.836,642.850,642.856 | A | | | 03/09 ▸ | 2045003603 | •735292 | 438 640 | ALB |
| 3.0 CDI V6 24V 212.089 | D | 2987 | 642.856 | A | | | 10/09 ▸ | 2045002803 | •735287 | 640 430 | ALB |
| **G CLASS (460)** | | | | | | | | | | |
| 2.0 i 460/.216/.236/.237 | E | 1997 | 102.964 | M | - | | 05/86 ▸ 1989 | 4605002503 | | 634 463 | CBS |
| 2.3 i 460/.218/.227/.228/.229/.238/.239/.249 | E | 2299 | 102.987,102.998 | M | - | | 06/82 ▸ 1989 | 4605002503 | | 634 463 | CBS |
| 2.3 i 460.229 | E | 2299 | 102.998 | A | - | | 11/79 ▸ 1989 | 4605002503 | | 634 463 | CBS |
| 2.3 460/.210/.220/.221/.230/.231/.241 | E | 2307 | 115.973 | M | +/- | | 03/79 ▸ 08/85 | 4605001103 | | 634 463 | CBS |
| 2.4 D 460/.310/.320/.321/.330/.331/.341 | D | 2399 | 616.936 | M | +/- | | 11/79 ▸ 1989 | 4605001103 | | 634 463 | CBS |
| 2.4 D 460/.310/.320/.321/.330/.331/.341 | D | 2399 | 616.936 | A | +/- | | 11/79 ▸ 1989 | 4605001103 | | 634 463 | CBS |
| **G CLASS (463) (89>)** | | | | | | | | | | |
| 2.0 i 463/.200/.220/.221 | E | 1997 | 102.965 | M | + | TSW | 09/89 ▸ | 4635001200 | 732459 | 538 568 | ALB |
| 2.3 i 461/.238/.239 ; 463/.204/.224/.225 | E | 2299 | 102.979,102.989 | M | + | TSW | 06/90 ▸ | 4635001200 | 732459 | 538 568 | ALB |
| 2.3 i 463/.204/.225 | E | 2299 | 102.989 | A | + | TSW | 06/90 ▸ 06/93 | 4635001200 | 732459 | 538 568 | ALB |
| 3.0 i 463/.207/.227/.228 | E | 2962 | 103.987 | M | + | TSW | 09/89 ▸ | 4635001200 | 732459 | 538 568 | ALB |
| 3.0 i 463/.207/.227/.228 | E | 2962 | 103.987 | A | + | TSW | 09/89 ▸ | 4635001200 | 732459 | 538 568 | ALB |
| 3.2 i,3.2 i V6 18V 463/.208/.230/.231 .232/.233/.244/.245/.250 | E | 3199 | 104.996,112.945 | A | + | TSW | 09/94 ▸ | 4635001200 | 732459 | 538 568 | ALB |
| 5.0 i V8 24V 463/.206/.240/.241 .247/.248/.254 | E | 4966 | 113.962 | A | + | TSW | 04/98 ▸ | 4635001200 | 732459 | 538 568 | ALB |
| 5.0 i V8 24V 463/.247/.249/.254 | E | 4966 | 113.962 | A | | TSW | 09/06 ▸ | 4635001200 | 732459 | 538 568 | ALB |
| 5.0 i 463.228 | E | 4973 | 117.965 | A | + | TSW | 01/92 ▸ 07/93 | 4635001200 | 732459 | 538 568 | ALB |
| 5.4 i V8 24V 463.243 | E | 5439 | 113.982 | A | + | TSW | 04/99 ▸ | 4635001200 | 732459 | 538 568 | ALB |
| 2.5 D 463/.304/.324/.325 | D | 2497 | 602.931 | M | + | TSW | 09/89 ▸ | 4635001200 | 732459 | 538 568 | ALB |
| 2.7 CDI 463/.322/.323 | D | 2685 | 612.965 | A | | TSW | 10/01 ▸ | 4635001200 | 732459 | 538 568 | ALB |
| 2.9 D 461/.323/.328/.329/.337/.338/.341/.367/.368 | D | 2874 | 602.942 | M | + | TSW | 01/92 ▸ | 4635001200 | 732459 | 538 568 | ALB |
| 2.9 D 461/.335/.336 | D | 2874 | 602.983 | A | + | TSW | 07/97 ▸ | 4635001200 | 732459 | 538 568 | ALB |
| 3.0 TD 463/.307/.327/.328 | D | 2996 | 603.931 | M | + | TSW | 09/89 ▸ | 4635001200 | 732459 | 538 568 | ALB |
| 3.0 TD 463/.307/.308/.327 .328/.330/.331 | D | 2996 | 603.931,606.964 | A | + | TSW | 09/89 ▸ | 4635001200 | 732459 | 538 568 | ALB |
| 3.5 TD 463/.300/.320/.321 | D | 3449 | 603.972 | A | + | TSW | 09/91 ▸ 09/97 | 4635001200 | 732459 | 538 568 | ALB |
| 3.5 TD 463/.300/.320/.321 | D | 3449 | 603.972 | A | | TSW | 09/91 ▸ 09/97 | 4635000400 | 732459 | 538 568 | ALB |
| 4.0 CDI V8 32V 463/.309/.332/.333 | D | 3996 | 628.962 | A | + | TSW | 12/00 ▸ | 4635001200 | 732459 | 538 568 | ALB |
| **GLK** | | | | | | | | | | |
| 3.5 i V6 24V 204.987 | E | 3498 | 272.971 | A | | | 07/08 ▸ | 2045002803 | •735287 | 640 430 | ALB |
| **M CLASS (163)** | | | | | | | | | | |
| ML230 i 163.136 | E | 2295 | 111.977 | M | | | 03/98 ▸ | 1635000404 | 732315 | 610 546 | ALB |
| ML320 i 163.154 | E | 3199 | 112.942 | A | | | 03/98 ▸ | 1635002204 | 732315 | 610 546 | ALB |
| ML430 i 163.172 | E | 4266 | 113.942 | A | | | 03/98 ▸ | 1635002204 | 732315 | 610 546 | ALB |
| ML55 i 163.174<br>A174243 ▸ | E | 5439 | 113.981 | A | | | > ▸ 08/04 | 1635000303 | 732706 | 610 544 | ALB |
| ML270CDi CDi 163.113 | D | 2668 | 612.963 | M | + | | 07/99 ▸ 03/05 | 1635000103 | 732736 | 610 544 | ALB |
| ML270CDi CDi 163.113 | D | 2668 | 612.963 | A | | | 07/99 ▸ 03/05 | 1635000103 | 732736 | 610 544 | ALB |
| **S CLASS (126)** | | | | | | | | | | |
| 380 SE i,380 SEL i 126/.032/.033<br>021545 ▸ | E | 3818 | 116.961 | A | | | 09/81 ▸ 09/85 | 1265013303 | •819378 | 428 663 | CBS |
| 380 SEC i 126.043 | E | 3839 | 116.963 | A | + | | 09/81 ▸ 08/85 | 1265003303 | •819378 | 428 663 | CBS |
| 420 SE i,420 SEC i 126/.034/.035/.046<br>420 SEL i | E | 4196 | 116.965 | A | + | | 09/85 ▸ 12/91 | 1265003303 | •819378 | 428 663 | CBS |
| 500 SEC i 126.044 | E | 4973 | 117.963 | A | + | | 09/81 ▸ 07/89 | 1265003303 | •819378 | 428 663 | CBS |
| 500 SE i,500 SEL i 126/.036/.037 | E | 4973 | 117.961 | A | | | 09/85 ▸ 06/91 | 1265013303 | •819378 | 428 663 | CBS |
| 560 SE i,560 SEL i 126/.038/.039 | E | 5547 | 117.968 | A | | | 09/85 ▸ 12/91 | 1265013303 | •819378 | 428 663 | CBS |
| 560 SEC i 126.045 | E | 5547 | 117.968 | A | + | | 09/85 ▸ 12/91 | 1265003303 | •819378 | 428 663 | CBS |
| **S CLASS (140)** | | | | | | | | | | |
| 300 140.028 | E | 2799 | 104.944 | M | | | 10/92 ▸ 06/93 | 1405002103 | 734631 | 665 475 | ALB |

# MERCEDES (.../...)

## S CLASS (140) (.../...)

| | | | CC | | AC | | | OE | Valeo | DIM. | TECH |
|---|---|---|---|---|---|---|---|---|---|---|---|
| 2.8 i | 140.028 | E | 2799 | 104.944 | M | | 07/93 ▸ 08/98 | 1405002103 | **734631** | 665 475 | ALB |
| 300 | 140.028 | E | 2799 | 104.944 | A | | 10/92 ▸ 06/93 | 1405002103 | **734631** | 665 475 | ALB |
| 2.8 i | 140.028 | E | 2799 | 104.944 | A | | 07/93 ▸ 08/98 | 1405002103 | **734631** | 665 475 | ALB |
| 300 A144704 ▸ | 140/.032/.033 | E | 3199 | 104.990 | M | | > ▸ 06/93 | 1405002103 | **734631** | 665 475 | ALB |
| 300 A144704 ▸ | 140/.032/.033 | E | 3199 | 104.990 | A | | > ▸ 06/93 | 1405002103 | **734631** | 665 475 | ALB |
| 3.2 i | 140/.032/.033 | E | 3199 | 104.994 | A | | 07/93 ▸ 08/98 | 1405002103 | **734631** | 665 475 | ALB |
| 300 ▸ A144703 | 140/.032/.033 | E | 3199 | 104.990 | M | | 03/91 ▸ | 1405000403 | **734793** | 665 470 | ALB |
| 300 ▸ A144703 | 140/.032/.033 | E | 3199 | 104.990 | A | | 03/91 ▸ | 1405000403 | **734793** | 665 470 | ALB |
| 3.0 TD | 140.135 | D | 2996 | 606.961 | A | TSW | 08/96 ▸ 08/98 | 1405002303 | **732447** | 668 471 | ALB |
| 300 TD | 140.134 | D | 3449 | 603.971 | A | TSW | 03/92 ▸ 06/93 | 1405002303 | **732447** | 668 471 | ALB |
| 3.5 TD | 140.134 | D | 3449 | 603.971 | A | TSW | 07/93 ▸ 08/98 | 1405002303 | **732447** | 668 471 | ALB |

## S CLASS (220)

| | | | | | | | | | | | |
|---|---|---|---|---|---|---|---|---|---|---|---|
| S280 i | 220.063 | E | 2799 | 112.922 | A | + | 03/99 ▸ 09/04 | 2205002403 | | 641 480 | ALB |
| S280 i | 220.063 | E | 2799 | 112.922 | A | + | 03/99 ▸ | 2205001403 | | 641 480 | ALB |
| S280L i | 220.163 | E | 2799 | 112.922 | A | | 03/99 ▸ 09/04 | 2205002403 | | 641 480 | ALB |
| S280 i | 220.063 | E | 2799 | 112.922 | A | | 10/99 ▸ 09/04 | 2205001403 | | 641 480 | ALB |
| S280 i ▸ A074047 | 220.063 | E | 2799 | 112.922 | A | | 03/99 ▸ | 2205000003 | **734801** | 645 462 | ALB |
| S320 i,S320L i | 220/.065/.165 | E | 3199 | 112.944 | A | + | 09/98 ▸ | 2205001403 | | 641 480 | ALB |
| S320 i,S320L i | 220/.065/.165 | E | 3199 | 112.944 | A | + | 09/98 ▸ 09/04 | 2205002403 | | 641 480 | ALB |
| S320 i,S320L i | 220/.065/.165 | E | 3199 | 112.944 | A | | 10/99 ▸ 09/04 | 2205001403 | | 641 480 | ALB |
| S320 i,S320L i ▸ A074047 | 220/.065/.165 | E | 3199 | 112.944 | A | | 09/98 ▸ | 2205000003 | **734801** | 645 462 | ALB |
| S350 i,S350L i | 220/.067/.087/.167 .187 | E | 3724 | 112.972,112.975 | A | + | 09/02 ▸ 09/04 | 2205002403 | | 641 480 | ALB |
| S430 i,S430L i | 220/.070/.083/.183 | E | 4266 | 113.941,113.948 | A | + | TSW 09/98 ▸ 09/04 | 2205000903 | **735234** | 640 475 | ALB |
| S430L i 074048 ▸ | 220.170 | E | 4266 | 113.941 | A | | TSW 09/98 ▸ 09/04 | 2205000903 | **735234** | 640 475 | ALB |
| S500 i,S500L i | 220/.075/.084/.175 .184/.875 | E | 4966 | 113.960,113.966 | A | + | TSW 09/98 ▸ 09/04 | 2205000903 | **735234** | 640 475 | ALB |
| S55 i 074048 ▸ | 220/.073/.173 | E | 5439 | 113.986 | A | + | TSW 01/00 ▸ 09/04 | 2205000903 | **735234** | 640 475 | ALB |
| S55 i | 220/.074/.174 | E | 5439 | 113.991 | A | + | TSW 06/02 ▸ 09/04 | 2205002003 | **735230** | 640 475 | ALB |
| S600L i | 220.176 | E | 5513 | 275.950 | A | + | TSW 09/02 ▸ 09/04 | 2205002003 | **735230** | 640 475 | ALB |
| S600L i | 220/.178/.878 | E | 5786 | 137.970 | A | + | TSW 01/00 ▸ 09/04 | 2205002003 | **735230** | 640 475 | ALB |
| S65 i | 220.179 | E | 5980 | 275.980 | A | + | TSW 01/04 ▸ 09/04 | 2205002003 | **735230** | 640 475 | ALB |
| S320CDI CDI,S320CDIL CDI | 220/.025/.125 | D | 3222 | 648.960 | A | + | TSW 09/02 ▸ 09/04 | 2205002003 | **735230** | 640 475 | ALB |
| S320CDI CDI,S320CDIL CDI | 220/.026/.126 | D | 3224 | 613.960 | A | + | TSW 01/00 ▸ 09/02 | 2205002003 | **735230** | 640 475 | ALB |
| S400CDI CDI | 220/.028/.128 | D | 3996 | 628.960 | A | + | TSW 04/00 ▸ 09/04 | 2205002003 | **735230** | 640 475 | ALB |

## S CLASS (221)

| | | | | | | | | | | | |
|---|---|---|---|---|---|---|---|---|---|---|---|
| 3.5 i V6 24V | 221/.056/.156 | E | 3498 | 272.965 | A | + | 10/04 ▸ 06/09 | 2215002603 | | 640 470 | ALB |
| 3.5 i V6 24V | 221/.056/.156 | E | 3498 | 272.965 | A | | 10/04 ▸ | 2215000503 | | 640 470 | ALB |
| 3.5 i V6 24V | 221/.056/.156 | E | 3498 | 272.965 | A | | 10/04 ▸ 06/09 | 2215003103 | •**735298** | 462 640 | ALB |
| 3.5 i V6 24V | 221/.056/.156 | E | 3498 | 272.965 | A | | 10/04 ▸ | 2215000003 | **734447** | 640 451 | ALM |
| 4.7 i V8 32V | 221/.070/.084/.170 .184 | E | 4663 | 273.922,273.924 | A | | 01/06 ▸ 06/09 | 2215003203 | •**735299** | 462 640 | ALB |
| 4.7 i V8 32V | 221/.070/.084/.170 .184 | E | 4663 | 273.922,273.924 | A | | 01/06 ▸ 06/09 | 2215002603 | | 640 470 | ALB |
| 4.7 i V8 32V | 221/.070/.084/.170 .184 | E | 4663 | 273.922,273.924 | A | | 01/06 ▸ | 2215000503 | | 640 470 | ALB |
| 5.5 i V8 32V | 221/.071/.086/.171 .186 | E | 5461 | 273.961,273.968 | A | | 10/04 ▸ 06/09 | 2215003203 | •**735299** | 462 640 | ALB |
| 5.5 i V8 32V | 221/.071/.086/.171 .186 | E | 5461 | 273.961,273.968 | A | | 10/04 ▸ | 2215000503 | | 640 470 | ALB |
| 5.5 i V8 32V | 221/.071/.086/.171 .186 | E | 5461 | 273.961,273.968 | A | | 10/04 ▸ 06/09 | 2215002603 | | 640 470 | ALB |
| 5.5 i V12 36V | 221.176 | E | 5513 | 275.953 | A | | 01/06 ▸ | 2215000103 | **734420** | 650 285 | ALM |
| 5.5 i V12 36V | 221.176 | E | 5513 | 275.953 | A | | 01/06 ▸ 06/09 | 2215002603 | | 640 470 | ALB |
| 5.5 i V12 36V | 221.176 | E | 5513 | 275.953 | A | | 01/06 ▸ 06/09 | 2215003203 | •**735299** | 462 640 | ALB |
| 5.5 i V12 36V | 221.176 | E | 5513 | 275.953 | A | | 01/06 ▸ | 2215000503 | | 640 470 | ALB |
| 6.0 i V12 36V | 221.179 | E | 5980 | 275.982 | A | | 01/06 ▸ | 2215000203 | **734945** | | |
| 6.0 i V12 36V | 221.179 | E | 5980 | 275.982 | A | | 01/06 ▸ 06/09 | 2215003203 | •**735299** | 462 640 | ALB |
| 6.0 i V12 36V | 221.179 | E | 5980 | 275.982 | A | | 04/06 ▸ 06/09 | 2215002603 | | 640 470 | ALB |
| 6.2 i V8 24V | 221.177 | E | 6208 | 156-984 | A | | 01/06 ▸ | 2215000203 | **734945** | | |

Radiator Radiateur Motorkühler Radiatore di raffreddamento Radiator Radyatör Radiador Радиатор vízhűtő Vodní chladič Radiator Ψυγείο



• **New** Nouveau **Nuevo** Novo **Nuovo** Nieuw **Neu** Nowość **Yeni** Новый Νέο **Novy**

| Type | | CC | | | AC | | | OE | Valeo | DIM. | TECH |
|---|---|---|---|---|---|---|---|---|---|---|---|
| **MERCEDES (.../...)** | | | | | | | | | | | |
| **S CLASS (221) (.../...)** | | | | | | | | | | | |
| 6.2 i V8 24V | 221.177 | E | 6208 | 156-984 | A | | | 01/06 ▸ 06/09 | 2215002603 | | 640 470 | ALB |
| 3.0 CDI V6 24V | 221/.022/.122 | D | 2987 | 642.930 | A | + | | 01/06 ▸ 06/09 | 2215002603 | | 640 470 | ALB |
| 3.0 CDI V6 24V | 221/.080/.180 | D | 2987 | 642.932 | A | | | 01/06 ▸ 06/09 | 2215002603 | | 640 470 | ALB |
| 3.0 CDI V6 24V | 221/.022/.080/.122 .180 | D | 2987 | 642.930,642.932 | A | | | 01/06 ▸ 06/09 | 2215003103 | •735298 | 462 640 | ALB |
| 3.0 CDI V6 24V | 221/.022/.080/.122 .180 | D | 2987 | 642.930,642.932 | A | | | 01/06 ▸ | 2215000203 | 734945 | | |
| 4.0 CDI V8 32V | 221/.028/.128 | D | 3996 | 629-911 | A | | | 01/06 ▸ 06/09 | 2215003203 | •735299 | 462 640 | ALB |
| 4.0 CDI V8 32V | 221/.028/.128 | D | 3996 | 629-911 | A | | | 01/06 ▸ | 2215000203 | 734945 | | |
| 4.0 CDI V8 32V | 221/.028/.128 | D | 3996 | 629-911 | A | | | 01/06 ▸ 06/09 | 2215002603 | | 640 470 | ALB |
| 4.0 CDI V8 32V | 221/.028/.128 | D | 3996 | 629-911 | A | | | 01/06 ▸ | 2215000103 | 734420 | 650 285 | ALM |
| **SL (129) (89>2001)** | | | | | | | | | | | |
| SL280 i ▸ F102095 | 129.058 | E | 2799 | 104.943 | M | | | 08/93 ▸ 07/01 | 1295000703 | 732454 | 667 374 | ALB |
| SL280 i ▸ F102095 | 129.058 | E | 2799 | 104.943 | A | | | 08/93 ▸ 07/01 | 1295000703 | 732454 | 667 374 | ALB |
| 300 i | 129.061 | E | 2960 | 104.981 | M | | | 03/89 ▸ 07/93 | 1295000703 | 732454 | 667 374 | ALB |
| 300 i | 129.061 | E | 2960 | 104.981 | A | | | 03/89 ▸ 07/93 | 1295000703 | 732454 | 667 374 | ALB |
| 300 i | 129.060 | E | 2962 | 103.984 | M | | | 03/89 ▸ 07/93 | 1295000703 | 732454 | 667 374 | ALB |
| 300 i | 129.060 | E | 2962 | 103.984 | A | | | 03/89 ▸ 07/93 | 1295000703 | 732454 | 667 374 | ALB |
| SL320 i ▸ F102095 | 129.063 | E | 3199 | 104.991 | A | | | 08/93 ▸ 07/01 | 1295000703 | 732454 | 667 374 | ALB |
| 500 i,SL500 i | 129/.066/.067 | E | 4973 | 119.960,119.972,119.982 | A | | | 03/89 ▸ 07/01 | 1295001003 | 734798 | 667 480 | ALB |
| 600 i,SL600 i | 129.076 | E | 5987 | 120.981,120.983 | A | | | 06/92 ▸ 07/01 | 1295001003 | 734798 | 667 480 | ALB |
| **SL (230) (2001>2008)** | | | | | | | | | | | |
| SL55 AMG Kompressor i SL55 AMG i | 230/.472/.474 | E | 5439 | 113.962,113.992,113.993 | A | | TSW | 08/01 ▸ 01/08 | 2205002003 | 735230 | 640 475 | ALB |
| SL65 AMG i | 230.479 | E | 5980 | 275.981 | A | | TSW | 01/04 ▸ 01/08 | 2205002003 | 735230 | 640 475 | ALB |
| **SL (230) (2008>)** | | | | | | | | | | | |
| 6.0 i V12 36V | 230.479 | E | 5980 | 275.981 | A | | TSW | 02/08 ▸ | 2205002003 | 735230 | 640 475 | ALB |
| 6.2 i V8 32V | 230.470 | E | 6208 | 156.981 | A | | TSW | 02/08 ▸ | 2205002003 | 735230 | 640 475 | ALB |
| **SLK (96>2003))** | | | | | | | | | | | |
| SLK200K i | 170.445 | E | 1998 | 111.943 | M | + | | 08/96 ▸ 03/00 | 2025003203 | 731808 | 615 422 | ALB |
| SLK200 i | 170.435 | E | 1998 | 111.946 | M | + | | 08/96 ▸ 03/00 | 2025002203 | 731805 | 615 432 | ALB |
| SLK200K i | 170.445 | E | 1998 | 111.943 | M | | | 08/96 ▸ 03/00 | 2025002203 | 731805 | 615 432 | ALB |
| SLK200 i | 170.435 | E | 1998 | 111.946 | M | | | 08/96 ▸ 03/00 | 1705000402 | | 360 432 | ALB |
| SLK200K i | 170.444 | E | 1998 | 111.958 | M | | | 04/00 ▸ 12/03 | 2025003203 | 731808 | 615 422 | ALB |
| SLK200 i | 170.435 | E | 1998 | 111.946 | A | + | | 08/96 ▸ 03/00 | 2025002203 | 731805 | 615 432 | ALB |
| SLK200 i | 170.435 | E | 1998 | 111.946 | A | | | 08/96 ▸ 03/00 | 1705000402 | | 360 432 | ALB |
| SLK200K i | 170.444 | E | 1998 | 111.958 | A | | | 04/00 ▸ 12/03 | 2025003203 | 731808 | 615 422 | ALB |
| SLK230K i | 170.447 | E | 2295 | 111.973 | M | + | | 08/96 ▸ 03/00 | 2025003203 | 731808 | 615 422 | ALB |
| SLK230K i | 170.447 | E | 2295 | 111.973 | M | | | 08/96 ▸ 03/00 | 2025002203 | 731805 | 615 432 | ALB |
| SLK230K i | 170.449 | E | 2295 | 111.983 | M | | | 06/99 ▸ 12/03 | 2025003203 | 731808 | 615 422 | ALB |
| SLK230K i | 170.447 | E | 2295 | 111.973 | A | + | | 08/96 ▸ 03/00 | 2025003203 | 731808 | 615 422 | ALB |
| SLK230K i | 170.447 | E | 2295 | 111.973 | A | | | 08/96 ▸ 03/00 | 2025002203 | 731805 | 615 432 | ALB |
| SLK230K i | 170.449 | E | 2295 | 111.983 | A | | | 06/99 ▸ 12/03 | 2025003203 | 731808 | 615 422 | ALB |
| **SLK (2004>2007)** | | | | | | | | | | | |
| SLK i | 171442 | E | 1796 | 271.944 | M | | | 03/04 ▸ 12/07 | 2035001003 | 732741 | 649,4 414 | ALB |
| SLK i | 171442 | E | 1796 | 271.944 | A | | | 01/04 ▸ 12/07 | 2035003403 | 732741 | 649,4 414 | ALB |
| SLK i | 171454 | E | 2996 | 272.940 | M | | | 01/05 ▸ 12/07 | 2035003903 | 732743 | 649,4 414,5 | ALB |
| SLK i | 171454 | E | 2996 | 272.940 | M | | | 01/05 ▸ 12/07 | 2035004203 | | 649 414 | ALB |
| SLK i | 171454 | E | 2996 | 272.940 | A | | | 01/05 ▸ 12/07 | 2035004203 | | 649 414 | ALB |
| SLK i | 171454 | E | 2996 | 272.940 | A | | | 01/05 ▸ 12/07 | 2035003903 | 732743 | 649,4 414,5 | ALB |
| SLK i | 171456 | E | 3498 | 272.963 | M | | | 01/04 ▸ 12/07 | 2035003903 | 732743 | 649,4 414,5 | ALB |
| SLK i | 171456 | E | 3498 | 272.963 | A | | | 01/04 ▸ 12/07 | 2035004203 | | 649 414 | ALB |
| SLK i | 171456 | E | 3498 | 272.963 | A | | | 01/04 ▸ 12/07 | 2035003903 | 732743 | 649,4 414,5 | ALB |
| SLK i | 171473 | E | 5439 | 113.989 | A | | | 01/04 ▸ 12/07 | 1715000003 | •734318 | 406,3 649,4 | ALB |
| **SLK (171) (2008>)** | | | | | | | | | | | |
| 1.8 i 16V | 171.445 | E | 1796 | 271.954 | M | + | | 01/08 ▸ | 2025003203 | 731808 | 615 422 | ALB |
| 1.8 i 16V | 171.445 | E | 1796 | 271.954 | M | - | | 01/08 ▸ | 2025002203 | 731805 | 615 432 | ALB |
| 1.8 i 16V | 171.445 | E | 1796 | 271.954 | A | + | | 01/08 ▸ | 2025003203 | 731808 | 615 422 | ALB |
| 1.8 i 16V | 171.445 | E | 1796 | 271.954 | A | - | | 01/08 ▸ | 2025002203 | 731805 | 615 432 | ALB |

# MERCEDES (.../...)

## SLK (171) (2008>) (.../...)

| | | | CC | | | AC | | | OE | Valeo | DIM. | TECH |
|---|---|---|---|---|---|---|---|---|---|---|---|---|
| 5.4 i V8 24V | 171.473 | E | 5439 | 113.989 | A | | | 01/08 ▸ | 1715000003 | •734318 | 406,3 649,4 | ALB |

## V CLASS (638/2)

| | | | | | | | | | | | | |
|---|---|---|---|---|---|---|---|---|---|---|---|---|
| V200 | 638/.214/.294 | E | 1998 | 111.948,111.950 | M | + | TSW | 10/96 ▸ 12/02 | 6385012701 | 734749 | 570 558 | ALB |
| V200 | 638.214 | E | 1998 | 111.948 | M | + | TSW | 10/96 ▸ 12/02 | 6385012201 | 734806 | 570 558 | ALB |
| V200 | 638.294 | E | 1998 | 111.950 | M | - | TSW | 10/96 ▸ 12/02 | 6385013001 | 734669 | 570 555 | ALM |
| V200 | 638.214 | E | 1998 | 111.948 | M | - | TSW | 10/96 ▸ 12/02 | 6385011601 | 734674 | 570 555 | ALB |
| V200 | 638.214 | E | 1998 | 111.948 | M | | TSW | 10/96 ▸ 12/02 | 6385012001 | 732471 | 558 570 | ALB |
| V200 | 638.294 | E | 1998 | 111.950 | A | + | TSW | 10/96 ▸ 12/02 | 6385012801 | 734668 | 570 558 | ALB |
| V200 | 638.214 | E | 1998 | 111.948 | A | + | TSW | 10/96 ▸ 12/02 | 6385012201 | 734806 | 570 558 | ALB |
| V200 | 638/.214/.294 | E | 1998 | 111.948,111.950 | A | - | TSW | 10/96 ▸ 12/02 | 6385012001 | 732471 | 558 570 | ALB |
| V230 | 638.234 | E | 2295 | 111.978 | M | + | TSW | 10/96 ▸ 12/02 | 6385012201 | 734806 | 570 558 | ALB |
| V230 | 638/.234/.294 | E | 2295 | 111.978,111.980 | M | - | TSW | 10/96 ▸ 12/02 | 6385011601 | 734674 | 570 555 | ALB |
| V230 | 638.294 | E | 2295 | 111.980 | M | | TSW | 10/96 ▸ 12/02 | 6385012201 | 734806 | 570 558 | ALB |
| V230 | 638.234 | E | 2295 | 111.978 | M | | TSW | 10/96 ▸ 12/02 | 6385012001 | 732471 | 558 570 | ALB |
| V230 | 638.234 | E | 2295 | 111.978 | A | + | TSW | 10/96 ▸ 12/02 | 6385012201 | 734806 | 570 558 | ALB |
| V230 | 638/.234/.294 | E | 2295 | 111.978,111.980 | A | - | TSW | 10/96 ▸ 12/02 | 6385012001 | 732471 | 558 570 | ALB |
| V230 | 638.294 | E | 2295 | 111.980 | A | | TSW | 10/96 ▸ 12/02 | 6385012201 | 734806 | 570 558 | ALB |
| V280 | 638.294 | E | 2792 | 104.900 | M | +/- | TSW 820207 | 10/96 ▸ 12/02 | 6385012401 | 734807 | 570 558 | ALB |
| V280 | 638/.244/.294 | E | 2792 | 104.900 | A | +/- | TSW 820207 | 10/96 ▸ 12/02 | 6385012401 | 734807 | 570 558 | ALB |
| V200 CDI,V220 CDI | 638.294 | D | 2151 | 611.980 | M | + | TSW | 01/99 ▸ 12/02 | 6385012701 | 734749 | 570 558 | ALB |
| V200 CDI | 638.294 | D | 2151 | 611.980 | M | - | TSW | 01/99 ▸ 12/02 | 6385013001 | 734669 | 570 555 | ALM |
| V220 CDI | 638.294 | D | 2151 | 611.980 | A | + | TSW | 01/99 ▸ 12/02 | 6385012201 | 734806 | 570 558 | ALB |
| V220 CDI | 638.294 | D | 2151 | 611.980 | A | + | TSW | 01/99 ▸ 12/02 | 6385012801 | 734668 | 570 558 | ALB |
| V200 CDI,V220 CDI | 638.294 | D | 2151 | 611.980 | A | + | TSW | 01/99 ▸ 12/02 | 6385012701 | 734749 | 570 558 | ALB |
| V200 CDI | 638.294 | D | 2151 | 611.980 | A | - | TSW | 01/99 ▸ 12/02 | 6385013001 | 734669 | 570 555 | ALM |
| V220 CDI ▸ 246705 | 638.294 | D | 2151 | 611.980 | M | + | TSW | 01/99 ▸ 12/02 | 6385012201 | 734806 | 570 558 | ALB |
| V220 CDI ▸ 246705 | 638.294 | D | 2151 | 611.980 | M | + | TSW | 01/99 ▸ 12/02 | 6385013001 | 734669 | 570 555 | ALM |
| V220 CDI ▸ 246705 | 638.294 | D | 2151 | 611.980 | M | - | TSW | 01/99 ▸ 12/02 | 6385011601 | 734674 | 570 555 | ALB |
| V220 CDI ▸ 246705 | 638.294 | D | 2151 | 611.980 | A | + | TSW | 01/99 ▸ 12/02 | 6385013001 | 734669 | 570 555 | ALM |
| V220 CDI ▸ 246705 | 638.294 | D | 2151 | 611.980 | A | - | TSW | 01/99 ▸ 12/02 | 6385012001 | 732471 | 558 570 | ALB |
| V230TD TD | 638.274 | D | 2299 | 601.970 | M | + | TSW | 10/96 ▸ 12/02 | 6385012201 | 734806 | 570 558 | ALB |
| V230TD TD | 638.274 | D | 2299 | 601.970 | M | - | TSW | 10/96 ▸ 12/02 | 6385011601 | 734674 | 570 555 | ALB |
| V230TD TD | 638.274 | D | 2299 | 601.970 | M | | TSW | 10/96 ▸ 12/02 | 6385012001 | 732471 | 558 570 | ALB |
| V230TD TD | 638.274 | D | 2299 | 601.970 | A | + | TSW | 10/96 ▸ 12/02 | 6385012201 | 734806 | 570 558 | ALB |
| V230TD TD | 638.274 | D | 2299 | 601.970 | A | - | TSW | 10/96 ▸ 12/02 | 6385012001 | 732471 | 558 570 | ALB |

## VANEO (414)

| | | | | | | | | | | | | |
|---|---|---|---|---|---|---|---|---|---|---|---|---|
| 1.6 i | 414.700 | E | 1598 | 166.960,166.961 | M | +/- | | 10/01 ▸ 07/05 | 1685001602 | 732897 | 600 355 | ALM |
| 1.6 i | 414.700 | E | 1598 | 166.961 | A | +/- | | 10/01 ▸ 07/05 | 1685001602 | 732897 | 600 355 | ALM |
| 1.9 i | 414.700 | E | 1898 | 166.991 | M | +/- | | 10/01 ▸ 07/05 | 1685001602 | 732897 | 600 355 | ALM |
| 1.9 i | 414.700 | E | 1898 | 166.991 | A | +/- | | 10/01 ▸ 07/05 | 1685001602 | 732897 | 600 355 | ALM |
| 1.7 CDI | 414.700 | D | 1689 | 668.914 | M | +/- | | 10/01 ▸ 07/05 | 1685001602 | 732897 | 600 355 | ALM |
| 1.7 CDI | 414.700 | D | 1689 | 668.914 | A | +/- | | 10/01 ▸ 07/05 | 1685001602 | 732897 | 600 355 | ALM |

# MERCEDES

## MB100

| | | | | | | | | | | | | |
|---|---|---|---|---|---|---|---|---|---|---|---|---|
| 2.0 D | 631/307/308/309 | D | 1998 | 615.970 | M | +/- | | 09/89 ▸ 01/96 | 6315000502 | 732442 | 410 489 | CBS |
| 2.4 D,2.4 D 56,2.4 D 72 | 631/312/313/314/317 318/319/332/333/334/340/342/343/344/350/352 353/354/360/362/364/365/366/370/372/373/374 | D | 2399 | 616.963 | M | +/- | | 09/89 ▸ 01/96 | 6315000502 | 732442 | 410 489 | CBS |
| 2.4 D 56 | 631333 | D | 2399 | 616.963 | M | | | 09/89 ▸ 01/96 | 1245003103 | | 612 488 | ALB |

## SPRINTER (95>)

| | | | | | | | | | | | | |
|---|---|---|---|---|---|---|---|---|---|---|---|---|
| 2.3 i | 904.012 | E | 2295 | 111.979 | M | +/- | | 02/95 ▸ | 9015002800 | 732472 | 680 406 | ALB |
| 2.3 i | 901/.061/.062 ; 902/.011/.012/.061/.062/.071 .072 ; 903/.011/.012/.013/.022/.061/.062 .063/.071/.072/.073 ; 904/.012/.013/.062 .063 | E | 2295 | 111.979 | M | + | | 02/95 ▸ 02/06 | 9015002800 | 732472 | 680 406 | ALB |
| 2.2 D | 901/.611/.612/.621/.661/.662 ; 902/.611/.612 .621/.622/.661/.662/.671/.672 ; 903/.611 .612/.613/.621/.622/.623/.661/.662/.663 .673 ; 904/.612/.613/.622/.623/.662/.663 | D | 2151 | 611DE22LA | M | + | | 11/99 ▸ 02/06 | 9015003600 | 734689 | 680 406 | ALB |

Radiator Radiateur Motorkühler Radiatore di raffreddamento Radiator Radyatör Radiador Радиатор vízhűtő Vodní chladič Radiator Ψυγείο



• **New** Nouveau **Nuevo** Novo **Nuovo** Nieuw **Neu** Nowość **Yeni** Новый Νέο **Nový**

## SPRINTER (95>) (.../...)

| Type Ctr. | | CC | | AC | | OE | Valeo | DIM. | TECH |
|---|---|---|---|---|---|---|---|---|---|
| 2.2 D | 901/.611/.612/.621/.661/.662 ; 902/.611/.612 .621/.622/.661/.662/.671/.672 ; 903/.611 .612/.613/.621/.622/.623/.661/.662/.663 .673 ; 904/.612/.613/.622/.623/.662/.663 | D | 2151 | 611DE22LA | M | - | 11/99 ▸ 02/06 | 9015003500 | **734689** | 680 406 | ALB |
| 2.3 D | 901/.311/.312/.321/.361/.362/.371 ; 902/.311 .312/.321/.322/.361/.362/.371/.372 ; 903 .311/.312/.313/.321/.322/.323/.361/.362/.363 .371/.372/.373 ; 904/.312/.313/.322/.323 .362/.363 | D | 2299 | 601.943 | M | + | 02/95 ▸ 02/06 | 9015003400 | **732472** | 680 406 | ALB |
| 2.7 D | 902/.611/.612/.621/.622/.661/.662/.671/.672 903/.611/.612/.613/.621/.622/.623/.661/.662 .663 ; 904/.612/.613/.622/.623/.662/.663 905/.612/.613/.622/.623 | D | 2686 | 612.981,612DE27LA | M | - | 11/99 ▸ 02/06 | 9015003500 | **734689** | 680 406 | ALB |
| 2.7 D | 905/.612/.613/.622/.623 | D | 2686 | 612.981 | A | - | 06/01 ▸ 02/06 | 9015003500 | **734689** | 680 406 | ALB |
| 2.7 D | 902/.611/.612/.621/.622/.661/.662/.671/.672 903/.611/.612/.613/.621/.622/.623/.661/.662 .663 ; 904/.612/.613/.622/.623/.662/.663 905/.612/.613/.622/.623 ▸ R337626 | D | 2686 | 612.981,612DE27LA | M | + | 11/99 ▸ | 9015003600 | **734689** | 680 406 | ALB |
| 2.7 D | 905/.612/.613/.622/.623 ▸ R337626 | D | 2686 | 612.981 | A | + | 06/01 ▸ | 9015003600 | **734689** | 680 406 | ALB |
| 2.9 D | 902.412 | D | 2874 | 602.980 | M | +/- | 02/95 ▸ | 9015002800 | **732472** | 680 406 | ALB |
| 2.9 D | 902.412 | D | 2874 | 602.980 | M | +/- | 02/95 ▸ 02/06 | 9015003400 | **732472** | 680 406 | ALB |
| 2.9 D | 901/.421/.461/.462 ; 902/.411/.412/.421/.422 .461/.462/.471/.472 ; 903/.411/.412/.413 .421/.422/.423/.461/.462/.463/.471/.472 .473 ; 904/.412/.413/.422/.423/.462/.463 | D | 2874 | 602.980 | M | + | 02/95 ▸ 02/06 | 9015002800 | **732472** | 680 406 | ALB |
| 2.9 D | 901/.421/.461/.462 ; 902/.411/.421/.422/.461 .462/.471/.472 ; 903/.411/.412/.413/.421 .422/.423/.461/.462/.463/.471/.472/.473 904/.412/.413/.422/.423/.462/.463 | D | 2874 | 602.980 | M | + | 02/95 ▸ 02/06 | 9015003400 | **732472** | 680 406 | ALB |
| 2.9 D | 901/.421/.461/.462 ; 902/.411/.412/.421/.422 .461/.462/.471/.472 ; 903/.411/.412/.413 .421/.422/.423/.461/.462/.463/.471/.472/.473 | D | 2874 | 602.980 | M | - | 02/95 ▸ 02/06 | 9015003100 | | | |

## SPRINTER II (2006>)

| | | | | | | | | | | | |
|---|---|---|---|---|---|---|---|---|---|---|---|
| 3.5 i | 906/.113/.133/.135/.213/.233/.235/.613/.633 .635/.637/.713/.733/.735 | E | 3498 | 272.979 | M | + | 02/06 ▸ | 9065000402 | **734929** | 680 414,5 | ALM |
| 3.5 i | 906/.113/.133/.135/.213/.233/.235/.613/.633 .635/.637/.713/.733/.735 | E | 3498 | 272.979 | M | + | 02/06 ▸ | 9065000302 | **735089** | 680 414,7 | ALB |
| 3.5 i | 906/.113/.133/.135/.213/.233/.235/.613/.633 .635/.637/.713/.733/.735 | E | 3498 | 272.979 | M | | 02/06 ▸ | 9065000002 | **734926** | 680 414,5 | ALM |
| 3.5 i | 906/.113/.133/.135/.213/.233/.235/.613/.633 .635/.637/.713/.733/.735 | E | 3498 | 272.979 | M | | 02/06 ▸ | 9065000102 | **735088** | 680 414,75 | ALB |
| 3.5 i | 906/.113/.133/.135/.213/.233/.235/.613/.633 .635/.637/.713/.733/.735 | E | 3498 | 272.979 | M | | 02/06 ▸ | 9065000202 | **734928** | 680 414,5 | ALM |
| 3.5 i | 906/.113/.133/.135/.213/.233/.235/.613/.633 .635/.637/.713/.733/.735 | E | 3498 | 272.979 | A | + | 02/06 ▸ | 9065000302 | **735089** | 680 414,7 | ALB |
| 3.5 i | 906/.113/.133/.135/.213/.233/.235/.613/.633 .635/.637/.713/.733/.735 | E | 3498 | 272.979 | A | + | 02/06 ▸ | 9065000402 | **734929** | 680 414,5 | ALM |
| 3.5 i | 906/.113/.133/.135/.213/.233/.235/.613/.633 .635/.637/.713/.733/.735 | E | 3498 | 272.979 | A | | 02/06 ▸ | 9065000202 | **734928** | 680 414,5 | ALM |
| 3.5 i | 906/.113/.133/.135/.213/.233/.235/.613/.633 .635/.637/.713/.733/.735 | E | 3498 | 272.979 | A | | 02/06 ▸ | 9065000002 | **734926** | 680 414,5 | ALM |
| 3.5 i | 906/.113/.133/.135/.213/.233/.235/.613/.633 .635/.637/.713/.733/.735 | E | 3498 | 272.979 | A | | 02/06 ▸ | 9065000102 | **735088** | 680 414,75 | ALB |
| 2.2 D | 906.235 | D | 2148 | 646.984 | M | +/- | 02/06 ▸ | 9065000402 | **734929** | 680 414,5 | ALM |
| 2.2 D | 906/.131/.635 | D | 2148 | 646,646.DE22LA | M | +/- | 02/06 ▸ | 9065000302 | **735089** | 680 414,7 | ALB |
| 2.2 D | 906/.111/.113/.131/.133/.135/.153/.155/.211 .213/.231/.233/.235/.253/.255/.611/.613/.631 .633/.635/.637/.653/.655/.657/.711/.713/.731 .733/.735 | D | 2148 | 646,646.984,646.DE22LA | M | + | 02/06 ▸ | 9065000402 | **734929** | 680 414,5 | ALM |
| 2.2 D | 906/.111/.113/.131/.133/.135/.153/.155/.211 .213/.231/.233/.235/.253/.255/.611/.613/.631 .633/.635/.637/.653/.655/.657/.711/.713/.731 .733/.735 | D | 2148 | 646 | M | + | 02/06 ▸ | 9065000202 | **734928** | 680 414,5 | ALM |
| 2.2 D | 906/.111/.113/.131/.133/.135/.153/.155/.211 .213/.231/.233/.235/.253/.255/.611/.613/.631 .633/.635/.637/.653/.655/.657/.711/.713/.731 .733/.735 | D | 2148 | 646,646.984,646.DE22LA | M | + | 02/06 ▸ | 9065000302 | **735089** | 680 414,7 | ALB |

# MERCEDES (.../...)

## SPRINTER II (2006>) (.../...)

| | | CC | | AC | | | OE | Valeo | DIM. | TECH |
|---|---|---|---|---|---|---|---|---|---|---|
| 2.2 D | 906/.111/.113/.211/.213/.611/.613/.711/.713 | D | 2148 | 646,646.984,646.DE22LA | M | - | 02/06 ▸ | 9065000002 | **734926** | 680 414,5 | ALM |
| 2.2 D | 906/.111/.113/.131/.133/.135/.153/.155/.211 .213/.231/.233/.235/.253/.255/.611/.613/.631 .633/.635/.637/.653/.655/.657/.713/.731/.733 .735 | D | 2148 | 646,646.984,646.DE22LA | M | | 02/06 ▸ | 9065000002 | **734926** | 680 414,5 | ALM |
| 2.2 D | 906/.111/.113/.131/.133/.135/.153/.155/.211 .213/.231/.233/.235/.253/.255/.611/.613/.631 .633/.635/.637/.653/.655/.657/.711/.713/.731 .733/.735 | D | 2148 | 646,646.984,646.DE22LA | M | | 02/06 ▸ | 9065000202 | **734928** | 680 414,5 | ALM |
| 2.2 D | 906/.111/.113/.131/.133/.135/.153/.155/.211 .213/.231/.233/.235/.253/.255/.611/.613/.631 .633/.635/.637/.653/.655/.657/.711/.713/.731 .733/.735 | D | 2148 | 646,646.984,646.DE22LA | M | | 02/06 ▸ | 9065000102 | **735088** | 680 414,75 | ALB |
| 2.2 D | 906/.111/.255/.631 | D | 2148 | 646 | A | +/- | 02/06 ▸ | 9065000402 | **734929** | 680 414,5 | ALM |
| 2.2 D | 906.733 | D | 2148 | 646.DE22LA | A | +/- | 02/06 ▸ | 9065000302 | **735089** | 680 414,7 | ALB |
| 2.2 D | 906/.111/.113/.131/.133/.135/.153/.155/.211 .213/.231/.233/.235/.253/.255/.611/.613/.631 .633/.635/.637/.653/.655/.657/.711/.713/.731 .733/.735 | D | 2148 | 646,646.984,646.DE22LA | A | + | 02/06 ▸ | 9065000402 | **734929** | 680 414,5 | ALM |
| 2.2 D | 906/.111/.113/.131/.133/.135/.153/.155/.211 .213/.231/.233/.235/.253/.255/.611/.613/.631 .633/.635/.637/.653/.655/.657/.711/.713/.731 .733/.735 | D | 2148 | 646,646.984,646.DE22LA | A | + | 02/06 ▸ | 9065000302 | **735089** | 680 414,7 | ALB |
| 2.2 D | 906/.111/.113/.211/.213/.611/.613/.711/.713 | D | 2148 | 646,646.984,646.DE22LA | A | - | 02/06 ▸ | 9065000002 | **734926** | 680 414,5 | ALM |
| 2.2 D | 906/.111/.113/.131/.133/.135/.153/.155/.211 .213/.231/.233/.235/.253/.255/.611/.613/.631 .633/.635/.637/.653/.655/.657/.711/.713/.731 .733/.735 | D | 2148 | 646,646.984,646.DE22LA | A | | 02/06 ▸ | 9065000202 | **734928** | 680 414,5 | ALM |
| 2.2 D | 906/.111/.113/.131/.133/.135/.153/.155/.211 .213/.231/.233/.235/.253/.255/.611/.613/.631 .633/.635/.637/.653/.655/.657/.711/.713/.731 .733/.735 | D | 2148 | 646,646.984,646.DE22LA | A | | 02/06 ▸ | 9065000102 | **735088** | 680 414,75 | ALB |
| 2.2 D | 906/.111/.113/.131/.133/.135/.153/.155/.211 .213/.231/.233/.235/.253/.255/.611/.613/.631 .633/.635/.637/.653/.655/.657/.731/.733/.735 | D | 2148 | 646,646.984,646.DE22LA | A | | 02/06 ▸ | 9065000002 | **734926** | 680 414,5 | ALM |
| 3.0 D V6 24V | 906/.111/.113/.131 .133/.135/.153/.155/.211/.213/.231/.233/.235 .253/.255/.611/.613/.631/.633/.635/.637/.653 .655/.657/.711/.713 | D | 2987 | 642.992 | M | + | 02/06 ▸ | 9065000402 | **734929** | 680 414,5 | ALM |
| 3.0 D V6 24V | 906/.111/.113/.131 .133/.135/.153/.155/.211/.213/.231/.233/.235 .253/.255/.611/.613/.631/.633/.635/.637/.653 .655/.657/.711/.713 | D | 2987 | 642.992 | M | + | 02/06 ▸ | 9065000302 | **735089** | 680 414,7 | ALB |
| 3.0 D V6 24V | 906/.111/.113/.131 .133/.135/.153/.155/.211/.213/.231/.233/.235 .253/.255/.611/.613/.631/.633/.635/.637/.653 .655/.657/.711/.713 | D | 2987 | 642.992 | M | - | 02/06 ▸ | 9065000202 | **734928** | 680 414,5 | ALM |
| 3.0 D V6 24V | 906/.111/.113/.131 .133/.135/.153/.155/.211/.213/.231/.233/.235 .253/.255/.611/.613/.631/.633/.635/.637/.653 .655/.657/.711/.713 | D | 2987 | 642.992 | M | - | 02/06 ▸ | 9065000102 | **735088** | 680 414,75 | ALB |
| 3.0 D V6 24V | 906/.111/.113/.131 .133/.135/.153/.155/.211/.213/.231/.233/.235 .253/.255/.611/.613/.631/.633/.635/.637/.653 .655/.657/.711/.713 | D | 2987 | 642.992 | M | | 02/06 ▸ | 9065000002 | **734926** | 680 414,5 | ALM |
| 3.0 D 24V,3.0 D V6 24V | 906/.111/.113/.131 .133/.135/.153/.155/.211/.213/.231/.233/.235 .253/.255/.611/.613/.631/.633/.635/.637/.653 .655/.657/.711/.713 | D | 2987 | 642.992 | A | + | 02/06 ▸ | 9065000302 | **735089** | 680 414,7 | ALB |
| 3.0 D 24V,3.0 D V6 24V | 906/.111/.113/.131 .133/.135/.153/.155/.211/.213/.231/.233/.235 .253/.255/.611/.613/.631/.633/.635/.637/.653 .655/.657/.711/.713 | D | 2987 | 642.992 | A | + | 02/06 ▸ | 9065000402 | **734929** | 680 414,5 | ALM |
| 3.0 D 24V,3.0 D V6 24V | 906/.111/.113/.131 .133/.135/.153/.155/.211/.213/.231/.233/.235 .253/.255/.611/.613/.631/.633/.635/.637/.653 .655/.657/.711/.713 | D | 2987 | 642.992 | A | | 02/06 ▸ | 9065000002 | **734926** | 680 414,5 | ALM |

Radiator Radiateur Motorkühler Radiatore di raffreddamento Radiator Radyatör Radiator Radiador Радиатор vízhűtő Vodní chladič Radiator Ψυγείο



• **New** Nouveau **Nuevo** Novo **Nuovo** Nieuw **Neu** Nowość **Yeni** Новый Νέο **Novy**

# MERCEDES (.../...)

## SPRINTER II (2006>) (.../...)

| | | CC | | AC | | | OE | Valeo | DIM. | TECH |
|---|---|---|---|---|---|---|---|---|---|---|
| 3.0 D 24V,3.0 D V6 24V 906/.111/.113/.131 .133/.135/.153/.155/.211/.213/.231/.233/.235 .253/.255/.611/.613/.631/.633/.635/.637/.653 .655/.657/.711/.713 | D | 2987 | 642.992 | A | | | 02/06 ▸ | 9065000102 | **735088** | 680 414,75 | ALB |
| 3.0 D 24V,3.0 D V6 24V 906/.111/.113/.131 .133/.135/.153/.155/.211/.213/.231/.233/.235 .253/.255/.611/.613/.631/.633/.635/.637/.653 .655/.657/.711/.713 | D | 2987 | 642.992 | A | | | 02/06 ▸ | 9065000202 | **734928** | 680 414,5 | ALM |

## TRANSPORTER 207-410

| | | | | | | | | | | | |
|---|---|---|---|---|---|---|---|---|---|---|---|
| 2.3 601/.011/.012/.016/.018/.021/.022/.061/.062 .066/.067/.071/.076/.077 ; 602/.011/.013 .016/.018/.021/.023/.026/.028/.061/.062/.066 .067/.071/.072/.076/.077/.082/.116/.117/.166 .167/.176/.177 763830 ▸ | E | 2299 | 102.942,102.945 | M | | | 03/82 ▸ | 6015008403 | **731741** | 475 496 | CBS |
| 2.3 601/.011/.012/.016/.018/.021/.022/.061/.062 .066/.067/.071/.076/.077 ; 602/.011/.013 .016/.018/.021/.023/.026/.028/.061/.062/.066 .067/.071/.072/.076/.077/.082/.116/.117/.166 .167/.176/.177 ; 611/.017/.018/.067/.068 763830 ▸ | E | 2299 | 102.942,102.945 | M | | | 03/82 ▸ | 6015007803 | **731741** | 475 496 | CBS |
| 2.3 611/.017/.018/.067/.068 ▸ 763829 | E | 2299 | 102.942,102.945 | M | | | 03/82 ▸ 11/85 | 0005018101 | | 477 503 | CBS |
| 2.3 601/.011/.012/.016/.018/.021/.022/.061/.062 .066/.067/.071/.076/.077 ; 602/.011/.013 .016/.018/.021/.023/.026/.028/.061/.062/.066 .067/.071/.072/.076/.077/.082/.116/.117/.166 .167/.176/.177 ▸ 763829 | E | 2299 | 102.942,102.945 | M | | | 03/82 ▸ 11/85 | 6015006703 | | 420 630 | CBS |
| 2.3 601/.011/.012/.016/.018/.021/.022/.026/.028 .061/.062/.066/.067/.071/.072/.076/.077 602/.011/.013/.016/.018/.021/.023/.026/.028 .061/.062/.066/.067/.071/.072/.076/.077/.082 | E | 2307 | 115.955,115.972 | M | | | 04/77 ▸ 02/82 | 6015006703 | | 420 630 | CBS |
| 2.3 D 601/.311/.312/.316/.318/.321/.322/.326/.328 .361/.362/.368/.371/.376/.377 ; 602/.311 .313/.316/.318/.321/.323/.326/.328/.361/.362 .366/.367/.371/.372/.376/.377 ; 611/.317 .318/.367/.368 | D | 2299 | 601.940 | M | | | 09/88 ▸ 02/96 | 6015007803 | **731741** | 475 496 | CBS |
| 2.3 D 601/.311/.312/.316/.318/.321/.322/.326/.328 .361/.362/.368/.371/.376/.377 ; 602/.311 .313/.316/.318/.321/.323/.326/.328/.361/.362 .366/.367/.371/.372/.376/.377 ; 611/.317 .318/.367/.368 | D | 2299 | 601.940 | M | | | 09/88 ▸ 02/96 | 6015008103 | **730883** | 475 491 | CBS |
| 2.3 D,2.4 D 601/.311/.312/.316 .318/.321/.322/.326/.328/.361/.362/.366/.367 .371/.372/.376/.377 ; 602/.311/.313/.316 .318/.321/.323/.326/.328/.361/.362/.366/.367 .371/.372/.376/.377/.382 ; 611/.317/.318 .367/.368 763830 ▸ | D | 2404 | 616.913,616.917,616.934 616.937,616.939 | M | | | 06/81 ▸ | 6015007803 | **731741** | 475 496 | CBS |
| 2.3 D,2.4 D 601/.311/.312/.316 .318/.321/.322/.326/.328/.361/.362/.366/.367 .371/.372/.376/.377 ; 602/.311/.313/.316 .318/.321/.323/.326/.328/.361/.362/.366/.367 .371/.372/.376/.377/.382 ; 611/.317/.318 .367/.368 763830 ▸ | D | 2404 | 616.913,616.917,616.934 616.937,616.939 | M | | | 06/81 ▸ | 6015008103 | **730883** | 475 491 | CBS |
| 2.3 D,2.4 D 601/.311/.312/.316 .318/.321/.322/.326/.328/.361/.362/.366/.367 .371/.372/.376/.377 ; 602/.311/.313/.316 .318/.321/.323/.326/.328/.361/.362/.366/.367 .371/.372/.376/.377/.382 ; 611/.317/.318 .367/.368 ▸ 763829 | D | 2404 | 616.913,616.917,616.934 616.937,616.939 | M | | | 04/77 ▸ 11/85 | 6015006703 | | 420 630 | CBS |
| 2.9 D 601/.411/.412/.416/.418/.421/.422/.426/.428 .461/.462/.466/.467/.476/.477 ; 611/.417 .418/.467/.468 | D | 2874 | 602.940 | M | | | 09/88 ▸ 02/96 | 6015007803 | **731741** | 475 496 | CBS |

# MERCEDES (.../...)

## TRANSPORTER 207-410 (.../...)

| | | CC | | AC | | | OE | Valeo | DIM. | TECH |
|---|---|---|---|---|---|---|---|---|---|---|
| 2.9 D 602/.411/.412/.416/.418/.421/.422/.426/.428 .461/.462/.466/.467/.471/.472/.476/.477/.478 .487 | D | 2874 | 602.940 | M | | | 09/88 ▸ | 6015007003 | **730883** | 475 491 | CBS |
| 3.0 D 602/.411/.413/.416/.418/.421/.423/.426/.428 .471/.472/.476/.477/.487 763830 ▸ | D | 2998 | 617.913 | M | | | 03/82 ▸ 01/90 | 6015006903 | **730883** | 475 491 | CBS |
| 3.0 D 601/.411/.412/.416/.418/.421/.422/.426/.428 .461/.462/.466/.467/.476/.477 ; 611/.417 .418/.467/.468 763830 ▸ | D | 2998 | 617.913 | M | | | 03/82 ▸ 01/90 | 6015007803 | **731741** | 475 496 | CBS |
| 3.0 D 602/.411/.413/.416/.418/.421/.423/.426/.428 .471/.472/.476/.477/.487 ; 611/.417/.418 .467/.468 | D | 2998 | 617.913 | M | | | 03/82 ▸ 11/85 | 0005018101 | | 477 503 | CBS |

## VITO (96>2003)

| | | CC | | AC | | | OE | Valeo | DIM. | TECH |
|---|---|---|---|---|---|---|---|---|---|---|
| 2.0 i 638/.094/.194 | E | 1998 | 111.950 | M | +/- | TSW | 03/99 ▸ 09/03 | 6385012201 | **734806** | 570 558 | ALB |
| 2.0 i 638/.014/.114 | E | 1998 | 111.948 | M | + | TSW | 01/96 ▸ 09/03 | 6385012201 | **734806** | 570 558 | ALB |
| 2.0 i 638/.014/.094/.114/.194 | E | 1998 | 111.948,111.950 | M | - | TSW | 01/96 ▸ 09/03 | 6385011601 | **734674** | 570 555 | ALB |
| 2.0 i 638/.014/.094/.114/.194 | E | 1998 | 111.948,111.950 | M | - | TSW | 01/96 ▸ 09/03 | 6385012001 | **732471** | 558 570 | ALB |
| 2.0 i 638/.014/.094/.114/.194 | E | 1998 | 111.948,111.950 | A | +/- | TSW | 01/96 ▸ 09/03 | 6385012201 | **734806** | 570 558 | ALB |
| 2.0 i 638/.014/.094/.194 | E | 1998 | 111.948,111.950 | A | - | TSW | 01/96 ▸ 09/03 | 6385012001 | **732471** | 558 570 | ALB |
| 2.0 i 638.114 | E | 1998 | 111.948 | A | | TSW | 01/96 ▸ 09/03 | 6385012001 | **732471** | 558 570 | ALB |
| 2.3 i 638/.034/.094/.134/.194 | E | 2295 | 111.978,111.980 | M | +/- | TSW | 12/96 ▸ 09/03 | 6385012201 | **734806** | 570 558 | ALB |
| 2.3 i 638/.094/.194 | E | 2295 | 111.980 | M | - | TSW | 12/96 ▸ 09/03 | 6385012001 | **732471** | 558 570 | ALB |
| 2.3 i 638/.034/.094/.134/.194 | E | 2295 | 111.978,111.980 | M | - | TSW | 12/96 ▸ 09/03 | 6385011601 | **734674** | 570 555 | ALB |
| 2.3 i 638/.034/.134 | E | 2295 | 111.978 | M | | TSW | 12/96 ▸ 09/03 | 6385012001 | **732471** | 558 570 | ALB |
| 2.3 i 638/.034/.094/.134/.194 | E | 2295 | 111.978,111.980 | A | +/- | TSW | 12/96 ▸ 09/03 | 6385012201 | **734806** | 570 558 | ALB |
| 2.3 i 638/.034/.094/.194 | E | 2295 | 111.978,111.980 | A | - | TSW | 12/96 ▸ 09/03 | 6385012001 | **732471** | 558 570 | ALB |
| 2.3 i 638.134 | E | 2295 | 111.978 | A | | TSW | 12/96 ▸ 09/03 | 6385012001 | **732471** | 558 570 | ALB |
| 2.2 CDI 638/.094/.194 | D | 2151 | 611.980 | M | +/- | TSW | 03/99 ▸ 09/03 | 6385012201 | **734806** | 570 558 | ALB |
| 2.2 CDI 638/.094/.194 | D | 2151 | 611.980 | M | - | TSW | 03/99 ▸ 09/03 | 6385011601 | **734674** | 570 555 | ALB |
| 2.2 CDI 638/.094/.194 | D | 2151 | 611.980 | M | | TSW | 03/99 ▸ 09/03 | 6385013001 | **734669** | 570 555 | ALM |
| 2.2 CDI 638/.094/.194 | D | 2151 | 611.980 | M | | TSW | 03/99 ▸ 09/03 | 6385012801 | **734668** | 570 558 | ALB |
| 2.2 CDI 638/.094/.194 | D | 2151 | 611.980 | M | | TSW | 03/99 ▸ 09/03 | 6385012701 | **734749** | 570 558 | ALB |
| 2.2 CDI 638/.094/.194 | D | 2151 | 611.980 | M | | TSW | 03/99 ▸ 09/03 | 6385012001 | **732471** | 558 570 | ALB |
| 2.2 CDI 638/.094/.194 | D | 2151 | 611.980 | A | +/- | TSW | 03/99 ▸ 09/03 | 6385012201 | **734806** | 570 558 | ALB |
| 2.2 CDI 638/.094/.194 | D | 2151 | 611.980 | A | - | TSW | 03/99 ▸ 09/03 | 6385011601 | **734674** | 570 555 | ALB |
| 2.2 CDI 638/.094/.194 | D | 2151 | 611.980 | A | | TSW | 03/99 ▸ 09/03 | 6385012801 | **734668** | 570 558 | ALB |
| 2.2 CDI 638/.094/.194 | D | 2151 | 611.980 | A | | TSW | 03/99 ▸ 09/03 | 6385012701 | **734749** | 570 558 | ALB |
| 2.2 CDI 638/.094/.194 | D | 2151 | 611.980 | A | | TSW | 03/99 ▸ 09/03 | 6385012001 | **732471** | 558 570 | ALB |
| 2.3 D,2.3 TD 638/.064/.068/.074 .078/.164/.174 | D | 2299 | 601.942,601.970 | M | + | TSW | 01/96 ▸ 09/03 | 6385012201 | **734806** | 570 558 | ALB |
| 2.3 D,2.3 TD 638/.064/.068/.074 .078/.164/.174 | D | 2299 | 601.942,601.970 | M | - | TSW | 01/96 ▸ 09/03 | 6385011601 | **734674** | 570 555 | ALB |
| 2.3 D,2.3 TD 638/.064/.068/.074 .078/.164/.174 | D | 2299 | 601.942,601.970 | M | - | TSW | 01/96 ▸ 09/03 | 6385012001 | **732471** | 558 570 | ALB |

# MG

## MG F

| | | CC | | AC | | | OE | Valeo | DIM. | TECH |
|---|---|---|---|---|---|---|---|---|---|---|
| 1.6 i 16V RDWB | E | 1589 | 16K4F4 | M | | | 02/00 ▸ 03/02 | PCC105740 | **731811** | 625 295 | CBS |
| 1.8 i VVC 16V RDWB | E | 1795 | 18K4K | M | | | 10/01 ▸ 03/02 | PCC105740 | **731811** | 625 295 | CBS |
| 1.8 i 16V,1.8 i VVC 16V RDWB | E | 1796 | 18K4F,18K4K | M | | | 03/95 ▸ 03/02 | PCC105740 | **731811** | 625 295 | CBS |

## MG TF

| | | CC | | AC | | | OE | Valeo | DIM. | TECH |
|---|---|---|---|---|---|---|---|---|---|---|
| 1.6 i 16V ▸ 600100 | E | 1589 | 16K4F4 | M | | | 03/02 ▸ | PCC105740 | **731811** | 625 295 | CBS |
| 1.8 i VVC 16V ▸ 600100 | E | 1795 | 18K4K | M | | | 03/02 ▸ | PCC105740 | **731811** | 625 295 | CBS |
| 1.8 i 16V ▸ 600100 | E | 1796 | 18K4F | M | | | 03/02 ▸ | PCC105740 | **731811** | 625 295 | CBS |
| 1.8 i 16V | E | 1796 | 18K4F | A | | | 03/02 ▸ | PCC105740 | **731811** | 625 295 | CBS |

## MG XPOWER

| | | CC | | AC | | | OE | Valeo | DIM. | TECH |
|---|---|---|---|---|---|---|---|---|---|---|
| 4.6 V8 32V | E | 4601 | 46K8-320 | M | | | 09/03 ▸ | PCC000960 | **734829** | 648 447 | CBS |

## MG ZR

| | | CC | | AC | | | OE | Valeo | DIM. | TECH |
|---|---|---|---|---|---|---|---|---|---|---|
| 1.4 i 16V | E | 1396 | 14K4F4 | M | +/- | | 06/01 ▸ 04/05 | PCC001660 | **734354** | 522 396 | ALB |

Radiator Radiateur Motorkühler Radiatore di raffreddamento Radiator Radyatör Radiador Радиатор vízhűtő Vodní chladič Radiator Ψυγείο



• **New** Nouveau **Nuevo** Novo **Nuovo** Nieuw **Neu** Nowość **Yeni** Новый Νέο **Nový**

| Type Ctr. | | CC | | AC | | | OE | Valeo | DIM. | TECH |
|---|---|---|---|---|---|---|---|---|---|---|
| **MG (.../...)** | | | | | | | | | | |
| **MG ZR (.../...)** | | | | | | | | | | |
| 1.4 i 16V<br>728653 ▸ | E | 1396 | 14K4F4 | M | + | | 06/01 ▸ | PCC107681 | **734354** | 522 396 | ALB |
| 1.4 i 16V<br>▸ 728652 | E | 1396 | 14K4F4 | M | - | | 06/01 ▸ | PCC001480 | **731815** | 430 377,5 | ALM |
| 1.4 i 16V<br>▸ 728653, 728652 | E | 1396 | 14K4F4 | M | + | | 06/01 ▸ | PCC107680 | **734354** | 522 396 | ALB |
| 1.8 i VVC 16V | E | 1795 | 18K4K | M | +/- | | 06/01 ▸ 04/05 | PCC001660 | **734354** | 522 396 | ALB |
| 1.8 i VVC 16V<br>728653 ▸ | E | 1795 | 18K4K | M | + | | 06/01 ▸ 07/04 | PCC107681 | **734354** | 522 396 | ALB |
| 1.8 i VVC 16V<br>728653 ▸ | E | 1795 | 18K4K | M | - | | 06/01 ▸ 07/04 | PCC001480 | **731815** | 430 377,5 | ALM |
| 1.8 i VVC 16V<br>▸ 728653 | E | 1795 | 18K4K | M | | | 06/01 ▸ | PCC107680 | **734354** | 522 396 | ALB |
| 1.8 i 16V | E | 1796 | 18K4F | M | +/- | | 06/01 ▸ 04/05 | PCC001660 | **734354** | 522 396 | ALB |
| 1.8 i 16V<br>728653 ▸ | E | 1796 | 18K4F | M | + | | 06/01 ▸ 07/04 | PCC107681 | **734354** | 522 396 | ALB |
| 1.8 i 16V<br>728653 ▸ | E | 1796 | 18K4F | M | - | | 06/01 ▸ 07/04 | PCC001480 | **731815** | 430 377,5 | ALM |
| 1.8 i 16V | E | 1796 | 18K4F | A | +/- | | 06/01 ▸ 04/05 | PCC001660 | **734354** | 522 396 | ALB |
| 1.8 i 16V<br>728653 ▸ | E | 1796 | 18K4F | A | + | | 06/01 ▸ 07/04 | PCC107681 | **734354** | 522 396 | ALB |
| 1.8 i 16V<br>728653 ▸ | E | 1796 | 18K4F | A | - | | 06/01 ▸ 07/04 | PCC001480 | **731815** | 430 377,5 | ALM |
| 1.8 i 16V<br>▸ 728652 | E | 1796 | 18K4F | A | | | 06/01 ▸ | PCC107680 | **734354** | 522 396 | ALB |
| 1.8 i 16V | E | 1796 | 18K4F | M | | | 06/01 ▸ | PCC107680 | **734354** | 522 396 | ALB |
| **MG ZS** | | | | | | | | | | |
| 1.6 i 16V<br>644945 ▸ | E | 1588 | 16K4F4 | M | +/- | | 2005 ▸ 04/05 | PCC001610 | **731818** | 525 377,5 | ALM |
| 1.6 i 16V | E | 1588 | 16K4F4 | M | + | | 07/01 ▸ | PCC107410 | **731818** | 525 377,5 | ALM |
| 1.6 i 16V<br>728653 ▸ | E | 1588 | 16K4F4 | M | | | 07/01 ▸ 06/04 | PCC107411 | **731818** | 525 377,5 | ALM |
| 1.6 i 16V<br>▸ 644944 | E | 1588 | 16K4F4 | M | + | | 07/04 ▸ 2005 | PCC107401 | **731818** | 525 377,5 | ALM |
| 1.8 i 16V | E | 1796 | 18K4F | M | +/- | | 07/04 ▸ 04/05 | PCC107411 | **731818** | 525 377,5 | ALM |
| 1.8 i 16V<br>644945 ▸ | E | 1796 | 18K4F | M | +/- | | 2005 ▸ 04/05 | PCC001610 | **731818** | 525 377,5 | ALM |
| 1.8 i 16V<br>728653 ▸ | E | 1796 | 18K4F | M | | | 07/01 ▸ 06/04 | PCC107411 | **731818** | 525 377,5 | ALM |
| 1.8 i 16V | E | 1796 | 18K4F | A | +/- | | 07/01 ▸ 06/04 | PCC107410 | **731818** | 525 377,5 | ALM |
| 1.8 i 16V | E | 1796 | 18K4F | A | +/- | | 07/04 ▸ 04/05 | PCC107411 | **731818** | 525 377,5 | ALM |
| 1.8 i 16V<br>▸ 644944 | E | 1796 | 18K4F | M | + | | 07/04 ▸ 2005 | PCC107401 | **731818** | 525 377,5 | ALM |
| 1.8 i 16V<br>▸ 728652 | E | 1796 | 18K4F | M | +/- | | 07/01 ▸ | PCC107410 | **731818** | 525 377,5 | ALM |
| 2.0 TD | D | 1994 | 20T2N | M | +/- | TSW | 05/02 ▸ 04/05 | PCC105520 | **734290** | 322 503 | ALM |
| 2.0 TD | D | 1996 | 20T2N | M | +/- | TSW | 05/02 ▸ 04/05 | PCC105520 | **734290** | 322 503 | ALM |
| **MG ZT** | | | | | | | | | | |
| 1.8 i Turbo 16V<br>208518 ▸ | E | 1795 | 18K4T | M | | | 06/01 ▸ | PCC000960 | **734829** | 648 447 | CBS |
| 1.8 i 16V | E | 1796 | 18K4F | M | | | 06/01 ▸ | PCC000960 | **734829** | 648 447 | CBS |
| 2.5 i V6 24V<br>208518 ▸ | E | 2497 | 25K6,25KV6-177 | M | | | 10/01 ▸ | PCC000960 | **734829** | 648 447 | CBS |
| 4.6 i V8 32V | E | 4601 | 46K8-260 | M | | | 09/03 ▸ | PCC000960 | **734829** | 648 447 | CBS |
| 2.0 CDT 16V,2.0 CDTi 16V | D | 1951 | 204D2,M47R | M | | | 12/02 ▸ | PCC000960 | **734829** | 648 447 | CBS |
| **MINI** | | | | | | | | | | |
| **MINI (2001>)** | | | | | | | | | | |
| 1.6 i 16V RE31 ; RH31 | E | 1598 | W11B16A-163,W11B16A-170 | M | + | | 04/02 ▸ | 17101475554 | **734328** | 578 399 | ALB |
| 1.6 i 16V RA30 ; RA31 ; RC31 | E | 1598 | W10B16A-115,W10B16A-90 | M | - | | 09/01 ▸ 07/04 | 17101475552 | **734326** | 539 359 | ALB |
| 1.6 i 16V RA31 ; RC31 ; RA30 | E | 1598 | W10B16A-115,W10B16A-90 | A | +/- | | 09/01 ▸ | 17101475550 | **734327** | 578 399 | ALB |
| 1.6 i 16V RA31 ; RF32 ; RA30 RC31 | E | 1598 | W10B16A-115,W10B16A-90 | A | | | 09/01 ▸ 07/04 | 17101475552 | **734326** | 539 359 | ALB |
| 1.4 d RB10 ; RB11 | D | 1364 | 1ND | M | +/- | | 05/03 ▸ 11/06 | 17117788753 | **734329** | 450 366 | ALB |
| **MINI 2 LCI (R56/R57) (2009>)** | | | | | | | | | | |
| 1.4 i 16V,1.4 i 75 16V | E | 1397 | N12B14A | M | | | 03/09 ▸ | 17117535099 | •**735480** | 600 420 | ALB |

| Type Ctr. | | CC | | AC | | | OE | Valeo | DIM. | TECH |
|---|---|---|---|---|---|---|---|---|---|---|
| **MINI (.../...)** | | | | | | | | | | |
| **MINI 2 LCI (R56/R57) (2009>) (.../...)** | | | | | | | | | | |
| 1.4 i 16V | E | 1397 | N12B14A | A | | | 03/09 ▸ | 17117535099 | •735480 | 600 420 ALB |
| 1.6 i 16V | E | 1598 | N12B16A | M | | | 05/09 ▸ | 17117535099 | •735480 | 600 420 ALB |
| 1.6 i Turbo 16V ZP32 ; ZP31<br>1.6 i Turbo 184 16V | E | 1598 | N18B16AM0 | M | | | 06/09 ▸ | 17112751275 | •735481 | 592 334 ALB |
| 1.6 i 16V | E | 1598 | N12B16A | A | | | 05/09 ▸ | 17117535099 | •735480 | 600 420 ALB |
| 1.6 i Turbo 16V ZP41 ; ZP42<br>1.6 i Turbo 184 16V | E | 1598 | N18B16AM0 | A | | | 06/09 ▸ | 17112751276 | •735481 | 592 334 ALB |
| **MINI (R56) (2006>)** | | | | | | | | | | |
| 1.4 i 16V ME31 ; ME32 | E | 1397 | N12B14A | M | + | | 03/07 ▸ | 17117535099 | •735480 | 600 420 ALB |
| 1.4 i 16V ME41 ; ME42 | E | 1397 | N12B14A | A | + | | 03/07 ▸ | 17117535099 | •735480 | 600 420 ALB |
| 1.6 i 16V MF31 ; MF32 ; MR31<br>MR32 | E | 1598 | N12B16A | M | | | 11/06 ▸ | 17117535099 | •735480 | 600 420 ALB |
| 1.6 i Turbo 16V MF91 ; MF92 ; MS31<br>MF71 ; MS32 ; MS91 | E | 1598 | N12B16A,N14B16A,N14B16C | M | | | 04/07 ▸ | 17112751275 | •735481 | 592 334 ALB |
| 1.6 i Turbo 16V MF82 ; MF81 | E | 1598 | N14B16A | A | | | 11/06 ▸ | 17112751276 | •735481 | 592 334 ALB |
| 1.6 i 16V MF42 ; MF41 | E | 1598 | N12B16A | A | | | 11/06 ▸ | 17117535099 | •735480 | 600 420 ALB |
| 1.6 D 16V MG31 ; MG32 | D | 1560 | 9HZ | M | + | | 03/07 ▸ | 17112751275 | •735481 | 592 334 ALB |
| **MINI CLUBMAN** | | | | | | | | | | |
| 1.4 i 16V MH32 ; MH31 | E | 1397 | N12B14A | M | | | 08/07 ▸ 03/09 | 17117535099 | •735480 | 600 420 ALB |
| 1.6 i 16V ML32 ; ML31 | E | 1598 | N12B16A | M | | | 08/07 ▸ 03/09 | 17117535099 | •735480 | 600 420 ALB |
| 1.6 i 16V,1.6 i Turbo 16V MM32 ; MM31 ; MM91<br>MM92 | E | 1598 | N14B16A,N14B16C,W11B16A-163 | M | | | 08/07 ▸ | 17112751275 | •735481 | 592 334 ALB |
| 1.6 i 16V ML42 ; ML41 | E | 1598 | N12B16A | A | | | 08/07 ▸ 03/09 | 17117535099 | •735480 | 600 420 ALB |
| 1.6 i 16V MM42 ; MM41 | E | 1598 | N14B16A | A | | | 08/07 ▸ 03/09 | 17112751276 | •735481 | 592 334 ALB |
| 1.6 D 16V MN52 ; MN51 | D | 1560 | 9HZ | M | | | 08/07 ▸ | 17112751275 | •735481 | 592 334 ALB |
| 1.6 D 16V MN61 ; MN62 | D | 1560 | 9HZ | A | | | 08/07 ▸ | 17112751275 | •735481 | 592 334 ALB |
| **MINI LCI CLUBMAN (R55) (2009>)** | | | | | | | | | | |
| 1.4 i 16V | E | 1397 | N12B14A | M | | | 03/09 ▸ | 17117535099 | •735480 | 600 420 ALB |
| 1.6 i 16V | E | 1598 | N14B16A | M | | | 03/09 ▸ | 17112751275 | •735481 | 592 334 ALB |
| 1.6 i 16V | E | 1598 | N12B16A | M | | | 03/09 ▸ | 17117535099 | •735480 | 600 420 ALB |
| 1.6 i 16V | E | 1598 | N14B16A | A | | | 03/09 ▸ | 17112751276 | •735481 | 592 334 ALB |
| 1.6 i 16V | E | 1598 | N12B16A | A | | | 03/09 ▸ | 17117535099 | •735480 | 600 420 ALB |
| **MITSUBISHI** | | | | | | | | | | |
| **3000 GT** | | | | | | | | | | |
| 3.0 i Turbo Z11AMNP | E | 2972 | 6G72-4H | M | | | 04/90 ▸ 05/93 | MB605455 | 731641 | 375 742 CBS |
| **CARISMA** | | | | | | | | | | |
| 1.6 i DA1/ALRD/ALRJ/ASRD/ASRJ | E | 1597 | 4G92-21L,4G92-23 | A | + | | 05/95 ▸ 04/97 | MB925638 | 734480 | 400 678 |
| 1.8 i 16V DA2/ALRJ/ALRP/ASRJ<br>ASRP | E | 1834 | 4G93-23 | A | + | | 05/95 ▸ 04/97 | MB925638 | 734480 | 400 678 |
| 1.9 TD DA4/ALND/ALNJ/ALNP<br>ALNX/ASND/ASNJ/ASNP/ASNX | D | 1870 | F8Q | M | + | | 05/96 ▸ 02/99 | MR187415 | 732525 | 400 674 ALB |
| 1.9 TD DA4/ALND/ALNJ/ALNP<br>ASND/ASNJ/ASNP | D | 1870 | F8Q | M | + | | 05/96 ▸ 02/99 | MB925662 | 732525 | 400 674 ALB |
| 1.9 TD DA4/ALNS/ALNU/ASNS<br>ASNU | D | 1870 | F8Q | M | + | | 03/99 ▸ 06/00 | MB925662 | 732525 | 400 674 ALB |
| **CHALLENGER** | | | | | | | | | | |
| 3.0 i V6 24V K96WGNH | E | 2972 | 6G72-8-GG | M | | | 10/98 ▸ 12/08 | MR239627 | 734144 | 425 638 ALB |
| 2.5 TD K94/WGNH/WNUF/WNUP | D | 2477 | 4D56T-4P | M | | | 10/98 ▸ 02/09 | MR258669 | 734143 | 500 638 ALB |
| **COLT II (84>87)** | | | | | | | | | | |
| 1200 C15/ALFD/ALND/AMFD/AMFM/AMND | E | 1198 | 4G16 | M | | | 01/84 ▸ 06/88 | MB222073 | 730449 | 325 420 CBS |
| 1300 C11/ALND/AMNM | E | 1299 | G13B | M | | | 06/86 ▸ 06/88 | MB222073 | 730449 | 325 420 CBS |
| 1500 C12/ALNJ/AMND/AMNJ | E | 1468 | 4G15,G15B | M | | | 01/84 ▸ 02/89 | MB222073 | 730449 | 325 420 CBS |
| 1500 C12/ALKJ/AMKJ | E | 1468 | 4G15,G15B | A | | | 01/84 ▸ 02/89 | MB356688 | | 350 490 CBS |
| 1600 Turbo C13AMNJ | E | 1597 | 4G32T | M | | | 01/84 ▸ 06/88 | MB356083 | | 400 418 CBS |
| 1800 D C14/ALND/ALNM/AMND<br>AMNM | D | 1796 | 4D65 | M | | | 01/84 ▸ 06/88 | MB222074 | | 400 418 CBS |
| **COLT III (87>91)** | | | | | | | | | | |
| 1300 C51/AMFM/AMND/AMNM/VMFM/VMNM | E | 1299 | 4G13,4G13-ESI | M | | | 04/88 ▸ 05/92 | MB660386 | 731646 | 377 438 CBS |
| 1500 C52/AMND/AMNJ | E | 1468 | 4G15,4G15-MPI,4G15-MPIC | M | | | 04/88 ▸ 05/92 | MB660386 | 731646 | 377 438 CBS |
| 1500 C52/AMKJ/AMRD/AMRJ | E | 1468 | 4G15,4G15-MPIC | A | | | 04/88 ▸ 05/92 | MB538548 | 731642 | 377 668 CBS |

Radiator Radiateur Motorkühler Radiatore di raffreddamento Radiator Radyatör Radiator Радиатор vízhűtő Vodní chladič Radiator Ψυγείο



• **New** Nouveau **Nuevo** Novo **Nuovo** Nieuw **Neu** Nowość **Yeni** Новый Νέο **Nový**

# MITSUBISHI (.../...)

| Type Ctr. | | CC | | | AC | | | OE | Valeo | DIM. | | TECH |
|---|---|---|---|---|---|---|---|---|---|---|---|---|
| **COLT III (87>91) (.../...)** | | | | | | | | | | | | |
| 1600 16V | C53AMNG | E | 1595 | 4G61-MPIC | M | | | 04/88 ▸ 05/90 | MB660364 | **731646** | 377 438 | CBS |
| 1600 16V | C53AMNG | E | 1596 | 4G61-MPI | M | | | 04/88 ▸ 05/90 | MB660364 | **731646** | 377 438 | CBS |
| 1800 16V | C58AMNG | E | 1836 | 4G67,4G67-C | M | | | 11/89 ▸ 05/92 | MB660364 | **731646** | 377 438 | CBS |
| 1800 D | C54/AMND/AMNM | D | 1796 | 4D65,4D65-C | M | | | 04/88 ▸ 05/92 | MB660364 | **731646** | 377 438 | CBS |
| **COLT IV (91>96)** | | | | | | | | | | | | |
| 1.3 | CA1/AMND/AMNJ/AMNM | E | 1299 | 4G13-2J | M | | | 12/91 ▸ 12/96 | MB660558 | **731647** | 377 438 | CBS |
| 1.6 | CA4AMNJ ; CC4AMNJ | E | 1597 | 4G92 | M | | | 12/91 ▸ 11/93 | MB660566 | **731451** | 375 658 | ALB |
| 1.6 | CA4/AMND/AMNJ | E | 1597 | 4G92 | M | | | 12/91 ▸ 11/93 | MB660562 | **732539** | 375 661 | CBS |
| 1.6 | CC4AMNJ | E | 1597 | 4G92 | M | | | 12/93 ▸ 12/96 | MB890506 | **731649** | 375 684 | CBS |
| 1.6 | CA4/AMND/AMNJ | E | 1597 | 4G92 | M | | | 12/93 ▸ 12/96 | MB924972 | **732327** | 375 682 | ALB |
| 1.6 | CA4/AMRD/AMRJ | E | 1597 | 4G92 | A | | | 12/91 ▸ 11/93 | MB660567 | **731649** | 375 684 | CBS |
| 1.6 | CA4/AMRD/AMRJ | E | 1597 | 4G92 | A | | | 12/93 ▸ 12/96 | MB890506 | **731649** | 375 684 | CBS |
| 1.8 16V | CA5AMNG | E | 1834 | 4G93-1 | M | | | 12/91 ▸ 11/93 | MB660566 | **731451** | 375 658 | ALB |
| 1.8 16V | CA5AMNG | E | 1834 | 4G93-1 | M | | | 12/93 ▸ 12/96 | MB890506 | **731649** | 375 684 | CBS |
| **COLT V (96>2003)** | | | | | | | | | | | | |
| 1.3 i | CJ1/AMND/AMNJ | E | 1299 | 4G13-38,4G13-380 | M | | | 11/95 ▸ | MR299619 | **732613** | 375 658 | ALB |
| 1.3 i,1.3 i 12V,1.3 i 16V | CJ1/AMND/AMNJ | E | 1299 | 4G13-38,4G13-380,4G13-6 | M | | | 11/95 ▸ 06/03 | MR187964 | **732613** | 375 658 | ALB |
| 1.3 i 12V | CJ1AMRJ | E | 1299 | 4G13-38 | A | | | 11/95 ▸ 05/00 | MR187964 | **732613** | 375 658 | ALB |
| 1.6 i | CJ4/AMND/AMNJ/AMNU | E | 1597 | 4G92-103,4G92-31,4G92-38 | M | | | 11/95 ▸ | MR299618 | **732612** | 376 657 | ALB |
| 1.6 i | CJ4/AMND/AMNJ/AMNU | E | 1597 | 4G92-103,4G92-31,4G92-38 | M | | | 11/95 ▸ 06/03 | MR187964 | **732613** | 375 658 | ALB |
| 1.6 i | CJ4/AMRJ/AMRU | E | 1597 | 4G92-103,4G92-31,4G92-38 | A | | | 11/95 ▸ 06/03 | MR187964 | **732613** | 375 658 | ALB |
| **COLT VI (2004>2008)** | | | | | | | | | | | | |
| 1.1 i | Z32/AMNL/AMNX/AXNL/AXNX | E | 1124 | 3A91 | M | | | 08/04 ▸ | MN130393 | **735055** | 640 402 | ALB |
| 1.3 i Mivec | Z34/AMJL/AMNL/AMNX AXJL/AXNL/AXNX | E | 1332 | 4A90 | M | | | 04/04 ▸ 09/08 | MN130393 | **735055** | 640 402 | ALB |
| 1.5 i Turbo | Z37/ABNH/AMNM | E | 1468 | 4G15MIVEC | M | | | 06/05 ▸ 09/08 | MN135879 | **735057** | 640 402 | ALB |
| 1.5 i Mivec 16V | Z36/ABNM/AMNL/AMNX AXJL/AXNL/AXNX | E | 1499 | 4A91 | M | | | 04/04 ▸ 09/08 | MN130393 | **735055** | 640 402 | ALB |
| 1.5 DI-D | Z38/AMNL/AXNL ; Z39 AMNL/AMNX/AXJL/AXNL/AXNX/VMNL | D | 1493 | D3-EA | M | | | 08/04 ▸ 09/08 | MN130395 | **735056** | 640 402 | ALB |
| **ECLIPSE** | | | | | | | | | | | | |
| 2.0 i 16V | D22AMNH ; D27AMNG | E | 1997 | 4G63-5D | M | | | 12/89 ▸ 03/94 | MB538509 | **731639** | 352 668 | CBS |
| 2.0 i 16V,2.0 i Turbo 16V | D27AMNG ; D22/AMNH AMNP | E | 1997 | 4G63-5B,4G63-5D,4G63-5L 4G63-78 | M | | | 01/90 ▸ 04/99 | MB538506 | **731638** | 352 668 | CBS |
| 2.0 i 16V | D22AMRH | E | 1997 | 4G63-5D | A | | | 12/89 ▸ 03/94 | MB538506 | **731638** | 352 668 | CBS |
| **GALANT II (84>87)** | | | | | | | | | | | | |
| 2.0 | E15ASNH | E | 1997 | 4G63-C | M | | | 07/83 ▸ 07/88 | MB222442 | | 375 598 | CBS |
| 2.0 | E15/ASNH/ASNJ | E | 1997 | 4G63-C,G63B | M | | | 05/84 ▸ 11/87 | MB222443 | | 375 600 | CBS |
| 2.0 Turbo | E15ASNG | E | 1997 | 4G63T | M | | | 05/86 ▸ 07/88 | MB356594 | | 375 648 | CBS |
| 2.0 Turbo | E15ASNG | E | 1997 | 4G63T | M | | | 06/86 ▸ 11/87 | MB356849 | | 375 648 | CBS |
| 2.0 | E15ASRH | E | 1997 | 4G63-C | A | | | 06/86 ▸ 11/87 | MB356849 | | 375 648 | CBS |
| 2.4 | E16ASNH | E | 2351 | G64B | M | | | 06/86 ▸ 11/87 | MB356849 | | 375 648 | CBS |
| 2.4 | E16ASRH | E | 2351 | G64B | A | | | 07/85 ▸ 11/87 | MB356849 | | 375 648 | CBS |
| 1.8 TD | E14/ASNJ/ASNU | D | 1796 | 4D65T | M | | | 05/86 ▸ 07/88 | MB356594 | | 375 648 | CBS |
| 1.8 TD | E14/ASNJ/ASNU | D | 1796 | 4D65T | M | | | 06/86 ▸ 11/87 | MB356849 | | 375 648 | CBS |
| 1.8 TD | E14ASRU | D | 1796 | 4D65T | A | | | 06/86 ▸ 11/87 | MB356849 | | 375 648 | CBS |
| **GALANT III (87>92)** | | | | | | | | | | | | |
| 1.6 | E31/ASND/ASNJ | E | 1597 | 4G32 | M | | TSW 820301 | 12/87 ▸ 10/92 | MB356521 | **731056** | 380 440 | CBS |
| 1.6 | E31ASNJ | E | 1597 | 4G32 | M | | TSW 820301 | 06/90 ▸ 10/92 | MB660472 | **731054** | 377 688 | CBS |
| 1.6 | E31ASRH | E | 1597 | 4G32 | A | | TSW 820301 | 06/90 ▸ 10/92 | MB660472 | **731054** | 377 688 | CBS |
| 1.8 | E32/ALNH/ALNJ/ASNH/ASNJ/ASNU | E | 1755 | 4G37,4G37-7F,4G37-7J | M | | TSW 820301 | 12/87 ▸ 10/92 | MB660472 | **731054** | 377 688 | CBS |
| 1.8 | E32/ALRH/ASRH | E | 1755 | 4G37,4G37-7F,4G37-7J | A | | TSW 820301 | 12/87 ▸ 10/92 | MB660472 | **731054** | 377 688 | CBS |
| 2.0,2.0 16V | E33/ALNG/ALNH/ALNJ ALNU/ASNG/ASNH/ASNJ ; E38/ALNH/ASNH ; E39 ALNG/ALNH/ASNG/ASNH | E | 1997 | 4G63,4G63-3L,4G63-3P,4G63-5 4G63-5B,4G63-5F | M | | TSW 820301 | 12/87 ▸ 10/92 | MB660472 | **731054** | 377 688 | CBS |
| 2.0 | E33/ALRH/ALRU/ASRH/ASRU | E | 1997 | 4G63,4G63-3L | A | | TSW 820301 | 12/87 ▸ 10/92 | MB660472 | **731054** | 377 688 | CBS |
| 1.8 TD | E34/ALNH/ALNJ/ASNH ASNJ | D | 1796 | 4D65-1D,4D65-1T | M | | TSW 820301 | 12/87 ▸ 10/92 | MB660472 | **731054** | 377 688 | CBS |
| 1.8 TD | E34/ALRH/ASRH | D | 1796 | 4D65-1D,4D65-1T | A | | TSW 820301 | 11/88 ▸ 10/92 | MB660472 | **731054** | 377 688 | CBS |
| **GALANT IV (92>96)** | | | | | | | | | | | | |
| 1.8 | E52/ASNH/ASNJ | E | 1834 | 4G93-OM3 | M | | | 11/92 ▸ 05/96 | MB845792 | **732539** | 375 661 | CBS |
| 2.0 16V,2.0 V6 24V | E54/ALNG/ASNG ; E55 ALNH/ALNJ/ASNH/ASNJ ; E64/ALNG/ASNG | E | 1997 | 4G63-68,6A12-0 | M | | TSW | 11/92 ▸ 05/96 | MB845797 | **734132** | 375 658 | ALB |

# MITSUBISHI (.../...)

## GALANT IV (92>96) (.../...)

| | | | CC | | | AC | | | OE | Valeo | DIM. | TECH |
|---|---|---|---|---|---|---|---|---|---|---|---|---|
| 2.0 16V | E75/ALNH/ASNH | E | 1997 | 4G63-68 | M | | | 11/92 ▸ 05/96 | MB845814 | **734142** | 375 718 | ALB |
| 2.0 16V,2.0 24V | E54/ASRG ; E55/ALRH ASRH | E | 1997 | 4G63-6M,6A12-0 | A | | TSW | 11/92 ▸ 05/96 | MB845797 | **734132** | 375 658 | ALB |
| 2.0 V6 24V | E54/ALRG/ASRG ; E64 ALRG/ASRG | E | 1997 | 6A12-0 | A | | | 11/92 ▸ 05/96 | MB845814 | **734142** | 375 718 | ALB |
| 2.0 16V | E55ASRH | E | 1997 | 4G63-6M | A | | TSW | 11/92 ▸ 09/96 | MB845796 | **734132** | 375 658 | ALB |
| 2.5 V6 24V | E88/ALNG/ASNG | E | 2497 | 6G73 | M | | | 11/92 ▸ 05/96 | MB845814 | **734142** | 375 718 | ALB |
| 2.0 TD | E57/ALNH/ALNJ/ASNH ASNJ | D | 1998 | 4D68T-1 | M | | | 11/92 ▸ 09/96 | MR161362 | **734128** | 375 718 | ALB |

## GALANT V (96>2003)

| | | | | | | | | | | | | |
|---|---|---|---|---|---|---|---|---|---|---|---|---|
| 2.0 i 16V | EA2/ASNH/ASNJ/WLNH WLNJ | E | 1997 | 4G63-6G,4G63-6T | M | | | 10/96 ▸ 11/97 | MR212449 | **734481** | 375 718 | ALB |
| 2.0 i 16V | EA2/ASRH/WLRH | E | 1997 | 4G63-6G,4G63-6M,4G63-6T | A | | | 10/96 ▸ 11/97 | MR212449 | **734481** | 375 718 | ALB |
| 2.0 i 16V | EA2/ASRH/WLRH | E | 1997 | 4G63-6G,4G63-6GR,4G63-6M 4G63-6T | A | | | 12/97 ▸ 06/99 | MR281668 | **734129** | 375 718 | ALB |
| 2.4 GDI,2.4 i | EA3/ASNH/ASNJ/WLNH WLNJ | E | 2351 | 4G64-41,4G64-418,4G64-41R 4G64-43 | M | | | 12/98 ▸ 05/03 | MR281668 | **734129** | 375 718 | ALB |
| 2.4 GDI,2.4 i | EA3/ASRH/ASRJ/WLRH WLRJ | E | 2351 | 4G64-41,4G64-418,4G64-41R 4G64-43 | A | | | 12/98 ▸ 05/03 | MR281668 | **734129** | 375 718 | ALB |
| 2.5 i V6 24V | EA5/ASNG/WLNG | E | 2497 | 6A13-41,6A13-48 | M | | | 10/96 ▸ 11/97 | MR281668 | **734129** | 375 718 | ALB |
| 2.5 i V6 24V | EA5/ASNG/WLNG | E | 2497 | 6A13-41,6A13-48,6A13-4F | M | | | 12/97 ▸ 05/03 | MR212455 | **734129** | 375 718 | ALB |
| 2.5 i V6 24V | EA5/ASRG/WLRG | E | 2497 | 6A13-41,6A13-48 | A | | | 10/96 ▸ 11/97 | MR281668 | **734129** | 375 718 | ALB |
| 2.5 i V6 24V | EA5/ASRG/WLRG | E | 2497 | 6A13-41,6A13-48,6A13-4E | A | | | 12/97 ▸ 05/03 | MR212455 | **734129** | 375 718 | ALB |
| 2.0 TD | EA6/ASNH/WLNH | D | 1998 | 4D68-4E,4D68-4E0 | M | | | 10/96 ▸ 02/00 | MR212455 | **734129** | 375 718 | ALB |

## GRANDIS

| | | | | | | | | | | | | |
|---|---|---|---|---|---|---|---|---|---|---|---|---|
| 2.4 i | NA4/WLRH/WLRU | E | 2378 | 4G69 | A | | | 01/04 ▸ | MN171217 | •**735576** | 425 728 | ALB |

## LANCER (CB/CD4) (92>96)

| | | | | | | | | | | | | |
|---|---|---|---|---|---|---|---|---|---|---|---|---|
| 1.6 i | CB4/WLND/WLNJ | E | 1597 | 4G92-01,4G92-0H | M | | | 06/92 ▸ 2000 | MB924972 | **732327** | 375 682 | ALB |
| 1.6 i | CB4/WLND/WLNJ ; CD4/WLND/WLNJ | E | 1597 | 4G92-01 | M | | | 06/92 ▸ 2000 | MB660562 | **732539** | 375 661 | CBS |
| 1.6 i | CB4/WLND ; CD4/WLND/WLNJ | E | 1597 | 4G92-01 | M | | | 06/92 ▸ 11/93 | MB660566 | **731451** | 375 658 | ALB |
| 1.6 i | CD4/WLND/WLNJ | E | 1597 | 4G92-01,4G92-0G,4G92-0H | M | | | 12/93 ▸ 2000 | MB890506 | **731649** | 375 684 | CBS |
| 1.6 i | CB4WLRJ | E | 1597 | 4G92-01,4G92-0H | A | | | 06/92 ▸ 2000 | MB890506 | **731649** | 375 684 | CBS |
| 1.6 i | CB4WLRJ | E | 1597 | 4G92-01 | A | | | 06/92 ▸ 11/93 | MB660567 | **731649** | 375 684 | CBS |

## LANCER (CK1/CP) (96>)

| | | | | | | | | | | | | |
|---|---|---|---|---|---|---|---|---|---|---|---|---|
| 1.3 i | CK1/ASND/ASNJ | E | 1299 | 4G13-38 | M | | | 11/95 ▸ 2000 | MR187964 | **732613** | 375 658 | ALB |
| 1.3 i | CK1/ASND/ASNJ | E | 1299 | 4G13-38 | M | | | 11/95 ▸ | MR299619 | **732613** | 375 658 | ALB |
| 1.3 i | CK1ASRJ | E | 1299 | 4G13-38 | A | | | 11/95 ▸ | MR299619 | **732613** | 375 658 | ALB |
| 1.3 i | CK1ASRJ | E | 1299 | 4G13-38 | A | | | 11/95 ▸ 2000 | MR187964 | **732613** | 375 658 | ALB |
| 1.6 i | CK4ASNJ | E | 1597 | 4G92-38 | M | | | 12/97 ▸ | MR299618 | **732612** | 376 657 | ALB |
| 1.6 i | CK4ASNJ | E | 1597 | 4G92-38 | M | | | 12/97 ▸ 2001 | MR187964 | **732613** | 375 658 | ALB |

## LANCER F (C1) (84>88)

| | | | | | | | | | | | | |
|---|---|---|---|---|---|---|---|---|---|---|---|---|
| 1200 | C15/ASFD/ASFM/ASND | E | 1198 | 4G16 | M | | | 01/84 ▸ 06/88 | MB222073 | **730449** | 325 420 | CBS |
| 1500 | C12ASNJ | E | 1468 | 4G15,G15B | M | | | 01/84 ▸ 06/88 | MB222073 | **730449** | 325 420 | CBS |
| 1500 | C12ASKJ | E | 1468 | 4G15,G15B | A | | | 01/84 ▸ 06/88 | MB356688 | | 350 490 | CBS |
| 1800 D | C14/ASND/ASNM | D | 1796 | 4D65 | M | | | 01/84 ▸ 06/88 | MB222074 | | 400 418 | CBS |

## LANCER F (C6/7) (88>95)

| | | | | | | | | | | | | |
|---|---|---|---|---|---|---|---|---|---|---|---|---|
| 1200 | C65ASND | E | 1198 | 4G16 | M | | | 04/88 ▸ 05/92 | MB660386 | **731646** | 377 438 | CBS |
| 1300 | C61/ALND/ASFM/ASND/ASNJ/ASNM | E | 1299 | 4G13,4G13-ESI,4G13-MPI | M | | | 04/88 ▸ 07/95 | MB660386 | **731646** | 377 438 | CBS |
| 1300 | C61ASND | E | 1299 | 4G13 | M | | | 04/88 ▸ 05/93 | MB538548 | **731642** | 377 668 | CBS |
| 1300 | C61/ASKD/ASKJ | E | 1299 | 4G13 | A | | | 04/88 ▸ 05/92 | MB538548 | **731642** | 377 668 | CBS |
| 1500 | C62/ALND/ALNJ/ASND/ASNJ | E | 1468 | 4G15,4G15-MPI | M | | | 04/88 ▸ 07/95 | MB660386 | **731646** | 377 438 | CBS |
| 1500 | C62/ASNJ/ASNM | E | 1468 | 4G15,4G15-ECI | M | | | 04/88 ▸ 05/93 | MB538548 | **731642** | 377 668 | CBS |
| 1500 | C62/ALKJ/ALRJ/ASKJ/ASRJ/ASRM | E | 1468 | 4G15,4G15-ECI,4G15-MPI | A | | | 04/88 ▸ 05/93 | MB538548 | **731642** | 377 668 | CBS |
| 1600 16V | C63ALNG | E | 1595 | 4G61-MPIC | M | | | 04/88 ▸ 05/90 | MB660364 | **731646** | 377 438 | CBS |
| 1600 16V | C63/ALNG/ASNG | E | 1596 | 4G61-MPI | M | | | 04/88 ▸ 05/90 | MB660364 | **731646** | 377 438 | CBS |
| 1600 | C66/ALND/ALNJ | E | 1597 | 4G92 | M | | | 06/92 ▸ 07/95 | MB538543 | **732540** | 377 688 | CBS |
| 1600 | C66ALRJ | E | 1597 | 4G92 | A | | | 06/92 ▸ 07/95 | MB660364 | **731646** | 377 438 | CBS |
| 1800 | C77LNJE | E | 1755 | 4G37-7G | M | | | 05/89 ▸ 05/92 | MB660364 | **731646** | 377 438 | CBS |
| 1800 16V | C69ALNG | E | 1834 | 4G93-1 | M | | | 06/92 ▸ 07/95 | MB660364 | **731646** | 377 438 | CBS |
| 1800 16V | C68/ALNG/ASNG | E | 1836 | 4G67,4G67-C | M | | | 11/89 ▸ 05/92 | MB660364 | **731646** | 377 438 | CBS |
| 1800 D | C64/ALND/ALNJ/ASND ASNJ/ASNM/ASNU | D | 1796 | 4D65,4D65-C | M | | | 04/88 ▸ 05/92 | MB660364 | **731646** | 377 438 | CBS |

Radiator Ψυγείο Vodní chladič Радиатор vízhűtő Radiador Radiator Radyatör Radiator Radiatore di raffreddamento Motorkühler Radiateur Radiator



• **New** Nouveau **Nuevo** Novo **Nuovo** Nieuw **Neu** Nowość **Yeni** Новый Νέο **Novy**

| Type Ctr. | | CC | | | AC | | | OE | Valeo | DIM. | | TECH |
|---|---|---|---|---|---|---|---|---|---|---|---|---|

# MITSUBISHI (.../...)

## LANCER F (C6/7) (88>95) (.../...)

| | | | | | | | | | | | | | |
|---|---|---|---|---|---|---|---|---|---|---|---|---|---|
| 2000 D | C67/ALND/ALNJ | D | 1998 | 4D68,4D68-0F | M | | | 06/92 ▸ 07/95 | MB660364 | **731646** | 377 | 438 | CBS |

## LANCER F (CB/CD) (92>96)

| | | | | | | | | | | | | | |
|---|---|---|---|---|---|---|---|---|---|---|---|---|---|
| 1.3 | CB1/ASND/ASNJ/ASNM | E | 1299 | 4G13-2J | M | | | 12/91 ▸ 12/96 | MB660558 | **731647** | 377 | 438 | CBS |
| 1.5 | CB2ASNJ | E | 1468 | 4G15 | M | | | 12/91 ▸ 10/96 | MB660558 | **731647** | 377 | 438 | CBS |
| 1.5 | CB2ASKJ | E | 1468 | 4G15 | A | | | 12/91 ▸ 10/96 | MB660561 | **731648** | 375 | 660 | ALB |
| 1.6 | CD4ASNJ ; CB4/ASND/ASNJ | E | 1597 | 4G92 | M | | | 05/92 ▸ 11/93 | MB660562 | **732539** | 375 | 661 | CBS |
| 1.6 | CB4ASNJ ; CD4ASNJ | E | 1597 | 4G92 | M | | | 05/92 ▸ 11/93 | MB660566 | **731451** | 375 | 658 | ALB |
| 1.6 | CB4/ASND/ASNJ | E | 1597 | 4G92 | M | | | 12/93 ▸ 12/96 | MB924972 | **732327** | 375 | 682 | ALB |
| 1.6 | CB4/ASRD/ASRJ | E | 1597 | 4G92 | A | | | 05/92 ▸ 11/93 | MB660567 | **731649** | 375 | 684 | CBS |
| 1.6 | CB4/ASRD/ASRJ | E | 1597 | 4G92 | A | | | 12/93 ▸ 12/96 | MB890506 | **731649** | 375 | 684 | CBS |
| 1.8 16V | CB5ASNG | E | 1834 | 4G93-1 | M | | | 05/92 ▸ 11/93 | MB660566 | **731451** | 375 | 658 | ALB |
| 1.8 16V | CB5ASNG | E | 1834 | 4G93-1 | M | | | 12/93 ▸ 12/96 | MB890506 | **731649** | 375 | 684 | CBS |

## LANCER F (CV)

| | | | | | | | | | | | | | |
|---|---|---|---|---|---|---|---|---|---|---|---|---|---|
| 1500 | C12/VLND/VLNJ | E | 1468 | 4G15,G15B | M | | | 07/85 ▸ 03/92 | MB222073 | **730449** | 325 | 420 | CBS |
| 1500 | C12VLKJ | E | 1468 | 4G15,4G15-MPI,G15B | A | | | 07/87 ▸ 03/92 | MB356688 | | 350 | 490 | CBS |
| 1800 | C37/VLND/VLNJ | E | 1755 | 4G37,G37B | M | | | 11/86 ▸ 03/92 | MB356083 | | 400 | 418 | CBS |
| 1800 D | C14VLND | D | 1796 | 4D65 | M | | | 07/85 ▸ 03/92 | MB222074 | | 400 | 418 | CBS |

## LANCER (CS) (2003>)

| | | | | | | | | | | | | | |
|---|---|---|---|---|---|---|---|---|---|---|---|---|---|
| 2.0 i 16V | CS9/ASNH/WLNH/WLNJ | E | 1997 | 4G63-7 | M | | | 06/03 ▸ | MR968857 | **735198** | 375 | 686 | ALB |

## LANCER EVOLUTION

| | | | | | | | | | | | | | |
|---|---|---|---|---|---|---|---|---|---|---|---|---|---|
| 2.0 MIVEC Turbo 16V | CZ4/ASMG/ASNG | E | 1998 | 4B11 | M | | | 08/07 ▸ | 1350A050 | **735200** | 700 | 402 | ALB |

## LANCER (2007>)

| | | | | | | | | | | | | | |
|---|---|---|---|---|---|---|---|---|---|---|---|---|---|
| 1.5 MIVEC 16V | CY2ASNS | E | 1499 | 4A91 | M | +/- | | 03/07 ▸ 06/10 | 1350A297 | •**735575** | 700 | 402 | ALB |
| 1.5 MIVEC 16V | CY2/ASNL/ASNS | E | 1499 | 4A91 | M | +/- | | 06/07 ▸ 03/09 | MN156092 | •**735575** | 700 | 402 | ALB |
| 1.8 MIVEC 16V | CY3/ASNS/ASNX | E | 1798 | 4B10 | M | +/- | | 01/08 ▸ | 1350A297 | •**735575** | 700 | 402 | ALB |
| 1.8 MIVEC 16V | CY3/ASTS/ASTX | E | 1798 | 4B10 | A | +/- | | 01/08 ▸ | 1350A297 | •**735575** | 700 | 402 | ALB |
| 2.0 MIVEC 16V | CY4/AS/ASNS/ASNX | E | 1998 | 4B11 | M | +/- | | 03/07 ▸ | 1350A297 | •**735575** | 700 | 402 | ALB |
| 2.0 MIVEC 16V | CY4/AS/ASTS/ASTX | E | 1998 | 4B11 | A | +/- | | 03/07 ▸ | 1350A297 | •**735575** | 700 | 402 | ALB |
| 2.0 MIVEC 16V | CY4ASMU | E | 1999 | 4B11-T/C | M | +/- | | 06/08 ▸ | 1350A297 | •**735575** | 700 | 402 | ALB |
| 2.0 DI-D 16V | CY8/ASJS/ASJX | D | 1968 | BSY,BSY/F | M | +/- | | 06/07 ▸ 06/10 | MN156092 | •**735575** | 700 | 402 | ALB |

## LANCER SPORTBACK (CX) (2008>)

| | | | | | | | | | | | | | |
|---|---|---|---|---|---|---|---|---|---|---|---|---|---|
| 1.8 MIVEC 16V | CX3A-LN | E | 1798 | 4B10 | M | +/- | | 07/08 ▸ 06/10 | MN156092 | •**735575** | 700 | 402 | ALB |
| 1.8 MIVEC 16V | CX3A-LN | E | 1798 | 4B10 | M | +/- | | 07/08 ▸ | 1350A297 | •**735575** | 700 | 402 | ALB |
| 1.8 MIVEC 16V | CX3A-LT | E | 1798 | 4B10 | A | +/- | | 07/08 ▸ | 1350A297 | •**735575** | 700 | 402 | ALB |
| 2.0 DI-D 16V | CX8/A-LJ/ALJX | D | 1968 | BSY,BSY/F | M | +/- | | 08/08 ▸ 06/10 | MN156092 | •**735575** | 700 | 402 | ALB |

## MONTERO

| | | | | | | | | | | | | | |
|---|---|---|---|---|---|---|---|---|---|---|---|---|---|
| 2.8 TD | V26/WGNX/WNHF ; V46 WGNX/WNDF/WNHF | D | 2835 | 4M40-0A | M | | | 11/93 ▸ 05/97 | MB890957 | **732748** | 500 | 603 | CBS |
| 2.8 TD | V46WGRX | D | 2835 | 4M40-0A | A | | | 11/93 ▸ 05/97 | MB890957 | **732748** | 500 | 603 | CBS |

## MONTERO SPORT

| | | | | | | | | | | | | | |
|---|---|---|---|---|---|---|---|---|---|---|---|---|---|
| 3.0 i V6 24V | K96WGNH | E | 2972 | 6G72-8-GG | M | | | 08/98 ▸ 08/99 | MR239627 | **734144** | 425 | 638 | ALB |
| 2.5 TD | K94/WGNH/WNUF/WNUP | D | 2477 | 4D56T-4P | M | | | 08/98 ▸ 02/09 | MR258669 | **734143** | 500 | 638 | ALB |

## OUTLANDER

| | | | | | | | | | | | | | |
|---|---|---|---|---|---|---|---|---|---|---|---|---|---|
| 2.0 i 16V | CU2/WXNH/WXNM | E | 1997 | 4G63,4G63-7T3 | M | | | 06/03 ▸ 12/08 | MR993742 | **735201** | 425 | 686 | ALB |
| 2.0 i Turbo 16V | CU2WXNX | E | 1997 | 4G63-7TU | M | | | 07/04 ▸ 12/08 | MN156535 | **735203** | 425 | 686 | ALB |
| 2.4 i 16V | CU5/WXNH/WXNM | E | 2378 | 4G69-2 | M | | | 09/03 ▸ 12/08 | MR993742 | **735201** | 425 | 686 | ALB |
| 2.4 i 16V | CU5/WXNH/WXNM | E | 2378 | 4G69-2 | M | | | 09/03 ▸ 12/08 | MN156535 | **735203** | 425 | 686 | ALB |
| 2.4 i 16V | CU5/WXRH/WXRM | E | 2378 | 4G69-2 | A | | | 09/03 ▸ 12/08 | MN156319 | **735202** | 425 | 696 | ALB |

## OUTLANDER (2006>)

| | | | | | | | | | | | | | |
|---|---|---|---|---|---|---|---|---|---|---|---|---|---|
| 2.0 i 16V | CW4/WXNH/WXNS | E | 1998 | 4B11 | M | +/- | | 06/09 ▸ | MN156092 | •**735575** | 700 | 402 | ALB |
| 2.4 MIVEC 16V,2.4 i 16V | CW5/W-XN/W-XS | E | 2360 | 4B12 | M | +/- | | 06/07 ▸ | MN156092 | •**735575** | 700 | 402 | ALB |
| 3.0 V6 | CW6W-XL | E | 2998 | 6B31 | A | | | 11/06 ▸ 05/09 | 1350A050 | **735200** | 700 | 402 | ALB |
| 2.0 DI-D | CW8W-XJ | D | 1968 | BSY,BSY/F | M | | | 11/06 ▸ 08/09 | 1350A050 | **735200** | 700 | 402 | ALB |
| 2.0 DI-D | CW8W-XJ | D | 1968 | BSY,BSY/F | M | +/- | | 09/09 ▸ | MN156092 | •**735575** | 700 | 402 | ALB |

## PAJERO I (82>91)

| | | | | | | | | | | | | | |
|---|---|---|---|---|---|---|---|---|---|---|---|---|---|
| 3.0 i V6 | L14/1GVN/6GWM | E | 2972 | 6G72 | M | | | 11/88 ▸ 06/91 | MB538806 | **734809** | 425 | 598 | CBS |
| 3.0 i V6 | L146GWM | E | 2972 | 6G72 | A | | | 11/88 ▸ 06/91 | MB538806 | **734809** | 425 | 598 | CBS |
| 2.3 TD | L04/3GNT/3GVN/8GWN | D | 2346 | 4D55T | M | | | 09/84 ▸ 04/86 | MB356156 | **730454** | 425 | 595 | CBS |

# MITSUBISHI (.../...)

## PAJERO I (82>91) (.../...)

| | | | | | | | | | | | | |
|---|---|---|---|---|---|---|---|---|---|---|---|---|
| 2.5 TD | L04/4GNF/4GNT/4GVN 9GVM/9GWM/9GWN ; L14/4GNF/4GVN/9GWM/9GWN | D | 2477 | 4D56T | M | | | 05/86 ▸ 06/91 | MB356156 | **730454** | 425 595 | CBS |
| 2.5 TD | L04/4GVR/9GWM/9GWR L14/4GVR/9GWM | D | 2477 | 4D56T | A | | | 05/86 ▸ 06/91 | MB356156 | **730454** | 425 595 | CBS |

## PAJERO II (91>99)

| | | | | | | | | | | | | |
|---|---|---|---|---|---|---|---|---|---|---|---|---|
| 3.0 i V6 | V23/CGNH/WGNX ; V43 WGNX/WNDE | E | 2972 | 6G72-1 | M | | | 12/90 ▸ 05/94 | MB660077 | **734809** | 425 598 | CBS |
| 3.0 i V6 | V23/CGNH/WGNX/WNHV V43/WGNX/WNHV | E | 2972 | 6G72-8H | M | | | 06/94 ▸ 05/01 | MR188432 | **735060** | 432 595 | CBS |
| 3.0 i V6 | V43WGRX ; V23/CGRH WGRX | E | 2972 | 6G72-1 | A | | | 12/90 ▸ 05/94 | MB660077 | **734809** | 425 598 | CBS |
| 3.0 i V6 | V23/CGRH/WGRX ; V43 WGRX/WRHV | E | 2972 | 6G72-8H | A | | | 06/94 ▸ 05/01 | MR188433 | **734809** | 425 598 | CBS |
| 3.5 i V6,3.5 i V6 24V | V25WGNX ; V45WGNX | E | 3497 | 6G74,6G74-B | M | | | 11/93 ▸ 02/00 | MB890951 | **735059** | 500 697 | ALB |
| 3.5 i V6,3.5 i V6 24V | V25WGRX ; V45WGRX | E | 3497 | 6G74,6G74-B | A | | | 11/93 ▸ 02/00 | MB890951 | **735059** | 500 697 | ALB |
| 2.5 D,2.5 TD | V14/CNSR/VNDR ; V24 CNSF/CNSG/WGNC/WGND/WGNH/WGNX/WNAF/WNBF/WNDF WNDG/WNHF/WNHG ; V44/WGND/WGNX/WNDF/WNDG WNHF/WNHG | D | 2477 | 4D56,4D56T-1,4D56T-2D,4D56T-4 4D56T-4P | M | | | 12/90 ▸ 05/01 | MB924487 | | 375 603 | CBS |
| 2.5 TD | V44/WGRX/WRHF | D | 2477 | 4D56T-1 | A | | | 12/90 ▸ 05/01 | MB924487 | | 375 603 | CBS |
| 2.8 TD | V26/WGNC/WGNX/WNHF V46/WGNC/WGNX/WNAF/WNBF/WNDF/WNHF | D | 2835 | 4M40-0A | M | | | 11/93 ▸ 05/97 | MB890957 | **732748** | 500 603 | CBS |
| 2.8 TD | V26/WGNX ; V46/WGNX WNHF | D | 2835 | 4M40-0A | M | | | 11/93 ▸ 05/97 | MB890955 | **732748** | 500 603 | CBS |
| 2.8 TD | V26/WGNX ; V46/WGNX WNHF/WNHG | D | 2835 | 4M40-0A,4M40-2A | M | | | 06/97 ▸ 05/01 | MR340051 | **732748** | 500 603 | CBS |
| 2.8 TD | V46/WGRC/WGRX/WRBF WRHF | D | 2835 | 4M40-0A | A | | | 11/93 ▸ 05/97 | MB890957 | **732748** | 500 603 | CBS |
| 2.8 TD | V46/WGRX/WRHF | D | 2835 | 4M40-0A | A | | | 11/93 ▸ 05/97 | MB890955 | **732748** | 500 603 | CBS |
| 2.8 TD | V46/WGRX/WRHF/WRHG | D | 2835 | 4M40-0A,4M40-2A | A | | | 06/97 ▸ 05/01 | MR340051 | **732748** | 500 603 | CBS |

## PAJERO III (2000>)

| | | | | | | | | | | | | |
|---|---|---|---|---|---|---|---|---|---|---|---|---|
| 3.5 GDI V6 24V | V65/WMYH/WMYX ; V75 WLYH/WLYX | E | 3497 | 6G74-B | A | | | 02/00 ▸ 05/01 | MR968056 | **735059** | 500 697 | ALB |
| 3.5 GDI V6 24V | V65/WMYH/WMYX ; V75 WLYH/WLYX | E | 3497 | 6G74-B | A | | | 02/00 ▸ 08/06 | MR968286 | **735059** | 500 697 | ALB |
| 3.2 DI-D | V68/WMYC/WMYH/WMYX V78/WLYB/WLYC/WLYH/WLYX | D | 3200 | 4M41,4M410A | A | | | 02/00 ▸ 08/06 | MR968289 | **735058** | 525 705 | ALB |

## PAJERO IV (2006>)

| | | | | | | | | | | | | |
|---|---|---|---|---|---|---|---|---|---|---|---|---|
| 3.2 DI-D 16V | V88/WMYH/WMYX ; V98 WLYH/WLYX | D | 3200 | 4M41,4M41-4/F | A | | | 11/06 ▸ | 1350A155 | **735058** | 525 705 | ALB |

## PAJERO SPORT (98>2009)

| | | | | | | | | | | | | |
|---|---|---|---|---|---|---|---|---|---|---|---|---|
| 3.0 i V6 24V | K96WGNH | E | 2972 | 6G72-8-GG | M | +/- | | 08/98 ▸ | MR239626 | **734144** | 425 638 | ALB |
| 3.0 i V6 24V | K96WGNH | E | 2972 | 6G72-8-GG | M | | | 08/98 ▸ 08/99 | MR239627 | **734144** | 425 638 | ALB |
| 2.5 TD | K94/WGNH/WNUF | D | 2477 | 4D56T-4P | M | +/- | | 08/98 ▸ | MR258668 | **734424** | 500 638 | ALB |
| 2.5 TD | K94/WGNH/WNUF/WNUP | D | 2477 | 4D56T-4P,4D56T-4P-115 | M | | | 08/98 ▸ 02/09 | MR258669 | **734143** | 500 638 | ALB |

## PAJERO PININ (99>)

| | | | | | | | | | | | | |
|---|---|---|---|---|---|---|---|---|---|---|---|---|
| 1.8 GDI 16V,1.8 i 16V | H76WLND ; H66/WMND WMNJ | E | 1834 | 4G93-D,4G93-H | M | | | 08/99 ▸ 02/05 | MR431239 | **734198** | 425 658 | ALB |
| 1.8 GDI 16V | H66WMRJ | E | 1834 | 4G93-H | A | | | 08/99 ▸ 04/00 | MR373172 | **734197** | 425 658 | ALB |
| 2.0 GDI 16V | H67WMNJ ; H77WLNJ | E | 1999 | 4G94-H | M | | | 07/00 ▸ 02/05 | MR431239 | **734198** | 425 658 | ALB |
| 2.0 GDI 16V | H67WMRJ ; H77WLRJ | E | 1999 | 4G94-H | A | | | 07/00 ▸ 02/05 | MR373172 | **734197** | 425 658 | ALB |

## SHOGUN 1 (L0/1)

| | | | | | | | | | | | | |
|---|---|---|---|---|---|---|---|---|---|---|---|---|
| 3.0 i V6 | L146GWM | E | 2972 | 6G72-1F | M | | | 11/88 ▸ 06/91 | MB538806 | **734809** | 425 598 | CBS |
| 3.0 i V6 | L146GWM | E | 2972 | 6G72-1F | A | | | 11/88 ▸ 06/91 | MB538806 | **734809** | 425 598 | CBS |
| 2.3 TD | L04/3GNT/3GVN/8GWN | D | 2346 | 4D55T | M | | | 09/84 ▸ 04/86 | MB356156 | **730454** | 425 595 | CBS |
| 2.5 TD | L04/4GVN/9GWM/9GWN L14/4GVN/9GWM/9GWN | D | 2477 | 4D56-05,4D56-09,4D56-14 | M | | | 05/86 ▸ 06/91 | MB356156 | **730454** | 425 595 | CBS |
| 2.5 TD | L149GWM ; L04/9GWM 9GWR | D | 2477 | 4D56-05,4D56-09,4D56-14 | A | | | 05/86 ▸ 06/91 | MB356156 | **730454** | 425 595 | CBS |

## SHOGUN 2 (V2:4)

| | | | | | | | | | | | | |
|---|---|---|---|---|---|---|---|---|---|---|---|---|
| 3.0 i V6 | V23WGNX ; V43WGNX | E | 2972 | 6G72-1 | M | | | 12/90 ▸ 05/94 | MB660077 | **734809** | 425 598 | CBS |
| 3.0 i V6 | V23/CGNH/WGNX ; V43 WGNX/WNHV | E | 2972 | 6G72-8H | M | | | 06/94 ▸ 05/01 | MR188432 | **735060** | 432 595 | CBS |

Radiator Radiateur Motorkühler Radiatore di raffreddamento Radiator Radyatör Радиатор Radiador Radiator vízhűtő Vodní chladič Radiator Ψυγείο



• **New** Nouveau **Nuevo** Novo **Nuovo** Nieuw **Neu** Nowość **Yeni** Новый Νέο **Novy**

# MITSUBISHI (.../...)

| | | | CC | | AC | | | OE | Valeo | DIM. | | TECH |
|---|---|---|---|---|---|---|---|---|---|---|---|---|
| **SHOGUN 2 (V2:4) (.../...)** | | | | | | | | | | | | |
| 3.0 i V6 | V23WGRX ; V43WGRX | E | 2972 | 6G72-1 | A | | | 12/90 ▸ 05/94 | MB660077 | **734809** | 425 | 598 CBS |
| 3.0 i V6 | V23/CGRH/WGRX ; V43 WGRX/WRHV | E | 2972 | 6G72-8H | A | | | 06/94 ▸ 05/01 | MR188433 | **734809** | 425 | 598 CBS |
| 3.5 i V6 | V25WGNX ; V45WGNX | E | 3497 | 6G74 | M | | | 11/93 ▸ 05/01 | MB890951 | **735059** | 500 | 697 ALB |
| 3.5 i V6 | V25WGRX ; V45WGRX | E | 3497 | 6G74 | A | | | 11/93 ▸ 05/01 | MB890951 | **735059** | 500 | 697 ALB |
| 2.5 D,2.5 TD | V14/CNSR/VNDR ; V24 WGNX/WNHF/WNHG ; V44/WGNX/WNHF | D | 2477 | 4D56,4D56T-1,4D56T-4P | M | | | 12/90 ▸ 05/01 | MB924487 | | 375 | 603 CBS |
| 2.5 TD | V44/WGRX/WRHF | D | 2477 | 4D56T-1 | A | | | 12/90 ▸ 05/01 | MB924487 | | 375 | 603 CBS |
| 2.8 TD | V26/WGNX ; V46/WGNX WNHF | D | 2835 | 4M40-0A | M | | | 11/93 ▸ 05/97 | MB890955 | **732748** | 500 | 603 CBS |
| 2.8 TD | V26/WGNX ; V46/WGNX WNHF/WNHG | D | 2835 | 4M40-0A,4M40-2A | M | | | 06/97 ▸ 05/01 | MR340051 | **732748** | 500 | 603 CBS |
| 2.8 TD | V46/WGRX/WRHF | D | 2835 | 4M40-0A | A | | | 11/93 ▸ 05/97 | MB890955 | **732748** | 500 | 603 CBS |
| 2.8 TD | V46/WGRX/WRHF/WRHG | D | 2835 | 4M40-0A,4M40-2A | A | | | 06/97 ▸ 05/01 | MR340051 | **732748** | 500 | 603 CBS |
| **SHOGUN 3 (V6/7)** | | | | | | | | | | | | |
| 3.5 GDI V6 24V | V65/WMYH/WMYX ; V75 WLYH/WLYX | E | 3497 | 6G74-B | A | | | 02/00 ▸ 05/01 | MR968056 | **735059** | 500 | 697 ALB |
| 3.5 GDI V6 24V | V65/WMYH/WMYX ; V75 WLYH/WLYX | E | 3497 | 6G74-B | A | | | 02/00 ▸ 08/06 | MR968286 | **735059** | 500 | 697 ALB |
| 3.2 DI-D | V68/WMYC/WMYH/WMYX V78/WLYB/WLYC/WLYH/WLYX | D | 3200 | 4M410A | A | | | 02/00 ▸ 08/06 | MR968289 | **735058** | 525 | 705 ALB |
| **SHOGUN 4 (2006>)** | | | | | | | | | | | | |
| 3.2 DI-D 16V | V88/WMYH/WMYX ; V98 WLYH/WLYX | D | 3200 | 4M41-4/F | A | | | 11/06 ▸ | 1350A155 | **735058** | 525 | 705 ALB |
| **SHOGUN PININ (99>)** | | | | | | | | | | | | |
| 1.8 GDI 16V,1.8 i 16V | H76WLND ; H66/WMND WMNJ | E | 1834 | 4G93-D,4G93-H | M | | | 08/99 ▸ 2005 | MR431239 | **734198** | 425 | 658 ALB |
| 1.8 GDI 16V | H66WMRJ | E | 1834 | 4G93-H | A | | | 08/99 ▸ 2005 | MR373172 | **734197** | 425 | 658 ALB |
| 2.0 GDI 16V | H67WMNJ ; H77WLNJ | E | 1999 | 4G94-H | M | | | 07/00 ▸ 2005 | MR431239 | **734198** | 425 | 658 ALB |
| 2.0 GDI 16V | H67WMRJ ; H77WLRJ | E | 1999 | 4G94-H | A | | | 07/00 ▸ 2005 | MR373172 | **734197** | 425 | 658 ALB |
| **SPACE GEAR** | | | | | | | | | | | | |
| 2.0 i 16V | PA3/WNLN/WNLZ | E | 1997 | 4G63-6F | M | | | 12/94 ▸ 02/98 | MR127283 | **734146** | 500 | 588 ALB |
| 2.0 i 16V | PA3WNLE | E | 1997 | 4G63-6M | A | | | 12/94 ▸ 02/98 | MR127283 | **734146** | 500 | 588 ALB |
| 2.4 i 16V | PD4WNLN ; PA4/WHSN WNLN/WNSN | E | 2351 | 4G64-2 | M | | | 12/94 ▸ 11/98 | MR127283 | **734146** | 500 | 588 ALB |
| 2.4 i 16V | PA4/WHSE/WNSE | E | 2351 | 4G64-2 | A | | | 12/94 ▸ 11/98 | MR127283 | **734146** | 500 | 588 ALB |
| 2.5 TD | PC5WHSZ ; PD5WNLN PA5/WNLN/WNLZ | D | 2477 | 4D56T-2E,4D56T-4 | M | | | 12/94 ▸ 07/97 | MR127889 | **734145** | 500 | 588 ALB |
| **SPACE RUNNER** | | | | | | | | | | | | |
| 1.8 i | N21WSNU ; N11/WSNJ/WSNU | E | 1834 | 4G93,4G93-0M3 | M | | | 06/91 ▸ 2002 | MB660213 | **731462** | 375 | 658 ALB |
| 1.8 i | N21WSNU ; N11/WSNJ/WSNU | E | 1834 | 4G93 | M | | | 09/94 ▸ 2002 | MB924249 | **734138** | 375 | 658 ALB |
| 1.8 i | N21WSNU | E | 1834 | 4G93 | M | | | 06/97 ▸ 2002 | MB924254 | **734139** | 375 | 658 ALB |
| 1.8 i | N11WSRU | E | 1834 | 4G93,4G93-0M3 | A | | | 06/91 ▸ 2002 | MB660213 | **731462** | 375 | 658 ALB |
| 1.8 i | N11WSRU | E | 1834 | 4G93 | A | | | 06/91 ▸ 05/93 | MB906097 | **734136** | 375 | 658 ALB |
| 1.8 i | N11WSRU | E | 1834 | 4G93 | A | | | 06/91 ▸ 08/94 | MB906098 | **734137** | 375 | 658 ALB |
| 1.8 i | N11WSRU | E | 1834 | 4G93 | A | | | 09/94 ▸ 2002 | MB924249 | **734138** | 375 | 658 ALB |
| 2.0 TD | N18/WSNJ/WSNU | D | 1998 | 4D68T | M | | | 06/92 ▸ 05/96 | MB906093 | **734141** | 400 | 661 CBS |
| 2.0 TD | N18/WSNJ/WSNU | D | 1998 | 4D68T | M | | | 06/97 ▸ 2002 | MR187435 | | 400 | 718 ALB |
| **SPACE WAGON (91>98)** | | | | | | | | | | | | |
| 1.8 | N31/WLNS/WLNU ; N41/WLNS/WLNU | E | 1834 | 4G93,4G93-0M3 | M | | | 05/91 ▸ 05/92 | MB660213 | **731462** | 375 | 658 ALB |
| 1.8 | N31/WLRS/WLRU ; N41/WLRS/WLRU | E | 1834 | 4G93,4G93-0M3 | A | | | 05/91 ▸ 05/92 | MB660213 | **731462** | 375 | 658 ALB |
| 2.0 16V | N33/WLNS/WLNU ; N43 WLNS/WLNU | E | 1997 | 4G63-6 | M | | | 06/92 ▸ 05/93 | MB660213 | **731462** | 375 | 658 ALB |
| 2.0 16V | N33/WLNS/WLNU ; N43 WLNS/WLNU | E | 1997 | 4G63-6 | M | | | 06/93 ▸ 11/00 | MB924249 | **734138** | 375 | 658 ALB |
| 2.0 16V | N33/WLRS/WLRU ; N43 WLRS/WLRU | E | 1997 | 4G63-6 | A | | | 06/92 ▸ 05/93 | MB906097 | **734136** | 375 | 658 ALB |
| 2.0 16V | N33/WLRS/WLRU | E | 1997 | 4G63-6 | A | | | 06/93 ▸ 11/00 | MB924249 | **734138** | 375 | 658 ALB |
| 2.0 16V | N43/WLRS/WLRU | E | 1997 | 4G63-6 | A | | | 06/93 ▸ 11/00 | MB924254 | **734139** | 375 | 658 ALB |
| 2.4 | N34WLNU | E | 2351 | 4G64 | M | | | 06/92 ▸ 05/93 | MB660216 | **734135** | 375 | 658 ALB |
| 2.4 | N34WLNU | E | 2351 | 4G64 | M | | | 06/93 ▸ 05/96 | MB924254 | **734139** | 375 | 658 ALB |
| 2.4 | N34WLRU | E | 2351 | 4G64 | A | | | 06/92 ▸ 05/93 | MB906098 | **734137** | 375 | 658 ALB |
| 2.4 | N34WLRU | E | 2351 | 4G64 | A | | | 06/93 ▸ 05/96 | MB924254 | **734139** | 375 | 658 ALB |
| 1.8 TD | N35WLNU | D | 1796 | 4D65T | M | | | 05/91 ▸ 05/92 | MB660216 | **734135** | 375 | 658 ALB |

| | | | CC | | | AC | | | OE | Valeo | DIM. | | TECH |
|---|---|---|---|---|---|---|---|---|---|---|---|---|---|
| **MITSUBISHI (.../...)** | | | | | | | | | | | | | |
| **SPACE WAGON (91>98) (.../...)** | | | | | | | | | | | | | |
| 2.0 TD | N38/WLNS/WLNU | D | 1998 | 4D68T | M | | | 06/92 ▸ 1997 | MB906093 | **734141** | 400 | 661 | CBS |
| 2.0 TD | N38/WLNS/WLNU | D | 1998 | 4D68T | M | | | 1997 ▸ 11/00 | MR187436 | **731462** | 375 | 658 | ALB |
| **SPACE WAGON (98>)** | | | | | | | | | | | | | |
| 2.0 i | N83/WLNF/WLNH/WLNU | E | 1997 | 4G63-MPI | M | | | 06/00 ▸ 01/04 | MR312099 | **734196** | 450 | 718 | ALB |
| 2.4 GDi | N84WLRU | E | 2351 | 4G64-412 | A | | | 07/98 ▸ 04/02 | MR312099 | **734196** | 450 | 718 | ALB |
| **MITSUBISHI** | | | | | | | | | | | | | |
| **L200 (K6/7)** | | | | | | | | | | | | | |
| 2.5 TD | K74/TCEN/TEND/TGCE TGJE/TJEN/TYND/TZND | D | 2477 | 4D56T,4D56T-5 | M | | | 01/96 ▸ 12/07 | MR281023 | •**735428** | 603 | 425 | CBS |
| 2.5 TD | K74/TCEN/TEND/TGCE TGJE/TJEN | D | 2477 | 4D56T,4D56T+,4D56T-5 | M | | | 07/01 ▸ 12/07 | MR571147 | •**735420** | 600 | 500 | ALB |
| 2.5 TD | K74TJER | D | 2477 | 4D56T | A | | | 01/96 ▸ 03/98 | MR281024 | •**735437** | 603 | 425 | CBS |
| **L 200 II (K84T) (2006>)** | | | | | | | | | | | | | |
| 2.5 TD | KB4/TGCN/TGJN/TNCN TNEN/TNJN | D | 2477 | 4D56 | M | +/- | | 01/06 ▸ | 1350A182 | •**735441** | 632 | 525 | ALB |
| **L400 (PA/PB/PD)** | | | | | | | | | | | | | |
| 2.0 i 16V | PA3/VGLZ/VNLN/VNLZ PB3/VHLZ/VJLZ | E | 1997 | 4G63-6F,4G63-AF | M | | | 12/94 ▸ 2001 | MR127283 | **734146** | 500 | 588 | ALB |
| 2.4 i 16V | PD4VNLN | E | 2351 | 4G64-2 | M | | | 12/94 ▸ 2001 | MR127283 | **734146** | 500 | 588 | ALB |
| 2.5 TD | PA5/VGLZ/VNLZ PD5VGLN ; PB5/VHLZ/VJLZ | D | 2477 | 4D56T-2D | M | | | 12/94 ▸ 2001 | MR127889 | **734145** | 500 | 588 | ALB |
| **NISSAN** | | | | | | | | | | | | | |
| **100 NX COUPÉ (90>95)** | | | | | | | | | | | | | |
| 1.6,1.6 i 16V | GAYALUA ; HAYALUA | E | 1597 | GA16DE,GA16DS | A | | | 10/90 ▸ 10/94 | 2146065Y02 | **731662** | 320 | 647 | ALB |
| 1.6,1.6 i 16V | GAYALUF ; HAYALUF | E | 1597 | GA16DE,GA16DS | M | | | 10/90 ▸ 10/94 | 2141062C01 | **731664** | 320 | 647 | ALB |
| 2.0 i 16V | GBYALWF ; HBYALWF | E | 1998 | SR20DEB | M | | TSW | 10/90 ▸ 10/94 | 2141059Y01 | **731202** | 646 | 322 | ALB |
| **200 SX (S14) (94>)** | | | | | | | | | | | | | |
| 2.0 Turbo 16V | GBYALRA | E | 1998 | SR20DET | A | | | 04/94 ▸ 12/99 | 2146069F00 | **734149** | 360 | 647 | ALB |
| **MAXIMA (J30)** | | | | | | | | | | | | | |
| 3.0 | HLJ30GF | E | 2960 | VG30E | M | | | 12/88 ▸ 10/91 | 2141085E00 | | 400 | 691 | ALB |
| 3.0 | HLJ30GA | E | 2960 | VG30E | A | | | 12/88 ▸ 09/94 | 2146085E01 | **731134** | 400 | 691 | ALB |
| 3.0 | HLJ30GA | E | 2960 | VG30E | A | | | 12/88 ▸ 10/91 | 2146085E00 | **731134** | 400 | 691 | ALB |
| **MAXIMA QX (A32)** | | | | | | | | | | | | | |
| 2.0 i V6 24V | CLFULVA | E | 1995 | VQ20DE | A | + | | 10/99 ▸ 12/99 | 214601L015 | **734150** | 400 | 686 | ALB |
| **PULSAR (N12)** | | | | | | | | | | | | | |
| 1.0 | RBLN12L | E | 988 | E10 | M | | | 04/82 ▸ 07/86 | 2140001A10 | | 330 | 340 | CBS |
| 1.3 | PLN12/YF ; RPLN1/2L/2Y | E | 1270 | E13 | M | | | 04/82 ▸ 07/86 | 2140001A10 | | 330 | 340 | CBS |
| 1.5 | HLN12/HF ; RHLN1/2H/2L | E | 1488 | E15 | M | | TSW | 04/82 ▸ 07/86 | 2140005A00 | **819219** | 330 | 410 | CBS |
| **ALMERA (95>2000)** | | | | | | | | | | | | | |
| 1.4 i 16V | BAVARBF | E | 1392 | GA14DE | M | + | | 10/99 ▸ 01/00 | 214100M203 | **734151** | 320 | 647 | ALB |
| 1.4 i 16V | BAVAL/DF/FF EAVARBF ; EAVAL/DF/FF/QF ; FAVAL/BF/DY/FF QF | E | 1392 | GA14DE | M | + | | 10/99 ▸ 01/00 | 214100M204 | **734155** | 320 | 647 | ALB |
| 1.4 i 16V | BAVARBF ; BAVAL/DF FF ; EAVARBF ; EAVAL/DF/FF/QF ; FAVAL/BF/DY FF/QF | E | 1392 | GA14DE | M | | | 07/95 ▸ 10/99 | 214100M003 | **732405** | 320 | 526 | ALB |
| 1.4 i 16V | BAVARBF ; BAVAL/DF FF ; EAVARBF ; EAVAL/DF/FF/QF ; FAVAL/BF/DY FF/QF | E | 1392 | GA14DE | M | | | 07/95 ▸ 06/98 | 214100M100 | **732405** | 320 | 526 | ALB |
| 1.4 i 16V | BAVARBF | E | 1392 | GA14DE | M | | | 10/99 ▸ 01/00 | 214100M204 | **734155** | 320 | 647 | ALB |
| 1.4 i 16V | BAVAL/DF/FF EAVARBF ; EAVAL/DF/FF/QF ; FAVAL/BF/DY/FF QF | E | 1392 | GA14DE | M | | | 10/99 ▸ 01/00 | 214100M203 | **734151** | 320 | 647 | ALB |
| 1.6 i 16V | BAYAL/DF/FF/QF EAYAL/DF/FF/QF ; FAYAL/DF/FF/QF | E | 1597 | GA16DE | M | + | | 10/99 ▸ 01/00 | 214100M204 | **734155** | 320 | 647 | ALB |

Radiator Radiateur Motorkühler Radiatore di raffreddamento Radiator Radyatör Radiador Радиатор vízhűtő Vodní chladič Radiator Ψυγείο



• **New** Nouveau **Nuevo** Novo **Nuovo** Nieuw **Neu** Nowość **Yeni** Новый Νέο **Nový**

# NISSAN (.../...)

| Type | Ctr. | CC | | | AC | | | OE | Valeo | DIM. | TECH |
|---|---|---|---|---|---|---|---|---|---|---|---|
| **ALMERA (95>2000) (.../...)** | | | | | | | | | | | |
| 1.6 i 16V | BAYAL/DF/FF/QF EAYAL/DF/FF/QF ; FAYAL/DF/FF/QF | E | 1597 | GA16DE | M | | | 07/95 ▸ 10/99 | 214100M003 | **732405** | 320 526 | ALB |
| 1.6 i 16V | BAYAL/DF/FF/QF EAYAL/DF/FF/QF ; FAYAL/DF/FF/QF | E | 1597 | GA16DE | M | | | 07/95 ▸ 06/98 | 214100M100 | **732405** | 320 526 | ALB |
| 1.6 i 16V | BAYAL/DF/FF/QF EAYAL/DF/FF/QF ; FAYAL/DF/FF/QF | E | 1597 | GA16DE | M | | | 10/99 ▸ 01/00 | 214100M203 | **734151** | 320 647 | ALB |
| 2.0 i 16V | EBYALUF | E | 1998 | SR20DEB | M | | TSW | 04/96 ▸ 01/98 | 214100M400 | **731202** | 646 322 | ALB |
| 2.0 i 16V | EBYALUF | E | 1998 | SR20DEB | M | | | 01/98 ▸ 01/00 | 214100M403 | **734151** | 320 647 | ALB |
| **ALMERA (2000>2003)** | | | | | | | | | | | |
| 1.5 i 16V | N16 | E | 1497 | QG15DE | M | | | 02/00 ▸ 01/03 | 21410BM402 | **734736** | 360 695 | ALB |
| 1.5 i 16V | N16 | E | 1497 | QG15DE | M | | | 02/00 ▸ 01/03 | 21410BM400 | **734736** | 360 695 | ALB |
| 1.8 i 16V | N16 | E | 1769 | QG18DE | M | | | 02/00 ▸ 01/03 | 21410BM400 | **734736** | 360 695 | ALB |
| 1.8 i 16V | N16 | E | 1769 | QG18DE | M | | | 02/00 ▸ 01/03 | 21410BM402 | **734736** | 360 695 | ALB |
| 1.8 i 16V | N16 | E | 1769 | QG18DE | A | | | 02/00 ▸ 01/03 | 21460BM702 | **734473** | 360 695 | ALB |
| 1.8 i 16V | N16 | E | 1769 | QG18DE | A | | | 02/00 ▸ 01/03 | 21460BM700 | **734473** | 360 695 | ALB |
| 1.5 dCi | N16 | D | 1461 | K9K.7 | M | | | 09/02 ▸ 01/03 | 21410BN700 | **734737** | 360 690 | ALB |
| 2.2 TDi 16V,2.2 VDi 16V | N16 | D | 2184 | YD22-110 | M | | | 02/00 ▸ 01/03 | 21410BN301 | **734708** | 360 689 | ALB |
| 2.2 TDi 16V,2.2 VDi 16V | N16 | D | 2184 | YD22-110 | M | | | 02/00 ▸ 01/03 | 21410BN300 | **734708** | 360 689 | ALB |
| **ALMERA TINO (2000>2003)** | | | | | | | | | | | |
| 1.8 i 16V | V10M | E | 1769 | QG18DE | M | | | 08/00 ▸ 01/03 | 21410BU001 | **734729** | 400 695 | ALB |
| 2.0 i 16V | V10M | E | 1998 | SR20DE | A | | | 08/00 ▸ 01/03 | 21410BU001 | **734729** | 400 695 | ALB |
| 2.2 VDi 16V | TVHALCF | D | 2184 | YD22DDTI-114 | M | | | 08/00 ▸ 01/03 | 21410BU001 | **734729** | 400 695 | ALB |
| **ALMERA TINO (2003>2005)** | | | | | | | | | | | |
| 1.8 i 16V | FV10EG | E | 1769 | QG18DE | M | | | 02/03 ▸ 11/05 | 21410BU001 | **734729** | 400 695 | ALB |
| **BLUEBIRD (T12) (86>88)** | | | | | | | | | | | |
| 1.6 | FLT12/DF/F/FQ/SF ; KLT12/DF/FQ/SF ; LT12D/F FQ ; LT12SFQ ; LT12F//Q | E | 1598 | CA16S | M | | | 12/85 ▸ 12/90 | 21410D4702 | | 410 648 | CBS |
| 2.0 | FHLT1/2A/2D/2F ; HLT12/AQ/DF/F/FR ; KHLT1/2D 2F | E | 1973 | CA20S | M | | | 12/85 ▸ 12/90 | 21410D4702 | | 410 648 | CBS |
| 2.0 D | FSLT12D ; SLT12DF | D | 1952 | LD20 | M | | | 12/85 ▸ 12/90 | 21410D4701 | | 410 648 | CBS |
| **BLUEBIRD (T72) (88>90)** | | | | | | | | | | | |
| 1.6 | LT72DFQ ; LT72FQ ; LT72SFQ ; FLT72/DF/FQ | E | 1598 | CA16S | M | + | | 09/88 ▸ 12/90 | 21410D4702 | | 410 648 | CBS |
| 1.6 | LT72DFQ ; LT72FQ ; LT72SFQ ; FLT72/DF/FQ | E | 1598 | CA16S | M | | TSW 820832 | 09/88 ▸ 12/90 | 21410Q9000 | **731087** | 603 430 | CBS |
| 1.8 Turbo,1.8 i Turbo | FPLT72D ; PLT72DF | E | 1809 | CA18ET,CA18T | M | | TSW 820832 | 09/88 ▸ 12/90 | 21410Q9000 | **731087** | 603 430 | CBS |
| 1.8 i | FRLT72F ; RLT72FE | E | 1809 | CA18DE | M | | TSW 820832 | 02/89 ▸ 12/90 | 21410Q9001 | **731087** | 603 430 | CBS |
| 2.0 | FHLT7/2D/2F/2X ; HLT72/DF/FQ/XF | E | 1973 | CA20S | M | + | | 09/88 ▸ 12/90 | 21410D4702 | | 410 648 | CBS |
| 2.0,2.0 i | FHLT7/2A/2D/2F/2X HLT72/DF/FE/FQ/XF | E | 1973 | CA20E,CA20S | M | | TSW 820832 | 12/85 ▸ 12/90 | 21410Q9000 | **731087** | 603 430 | CBS |
| 2.0,2.0 i | FHLT7/2A/2X ; HLT72 AE/AQ/XA | E | 1973 | CA20E,CA20S | A | | | 09/88 ▸ 12/90 | 21460Q9000 | | 615 440 | CBS |
| 2.0 D | FLT72/DF/FQ ; SLT72/DF/FQ | D | 1952 | LD20 | M | | TSW 820832 | 09/88 ▸ 12/90 | 21410Q9000 | **731087** | 603 430 | CBS |
| **BLUEBIRD (U11) (84>86)** | | | | | | | | | | | |
| 1.8 | WLJU11D ; WLU11HF | E | 1809 | CA18S | M | | | 10/83 ▸ 1987 | 21410D4702 | | 410 648 | CBS |
| 1.8 | LU11HFJ ; LU11D/FJ ; WLU11/DF/HF | E | 1809 | CA18S | M | | | 10/83 ▸ 1987 | 2140005E60 | | 410 648 | CBS |
| 1.8 | LU11D//F/FQ ; LU11H/F/FQ | E | 1809 | CA18S | M | | | 10/83 ▸ 1987 | 2140002E00 | | 410 647 | CBS |
| 1.8 | MU11HAU | E | 1809 | CA18N | A | | | 06/86 ▸ 1987 | 21410D4702 | | 410 648 | CBS |
| 2.0 | WYLU1/1G/1H ; YLU11/GF/HF | E | 1973 | CA20S | M | | | 10/83 ▸ 1987 | 2140005E60 | | 410 648 | CBS |
| 2.0 | WYLU1/1D/1G/1H ; YLU11/GF/HF | E | 1973 | CA20S | M | | | 10/83 ▸ 1987 | 2140002E00 | | 410 647 | CBS |
| 2.0 | WYLU1/1G/1H | E | 1973 | CA20S | M | | | 10/83 ▸ 1987 | 21410D4702 | | 410 648 | CBS |
| 2.0 D | ELU11/DF/HF | D | 1952 | LD20 | M | | | 10/83 ▸ 1987 | 2140005E60 | | 410 648 | CBS |
| 2.0 D | WELJU/11 ; WELU1/1D/1G/1H | D | 1952 | LD20 | M | | | 10/83 ▸ 1987 | 21410D4701 | | 410 648 | CBS |
| **CHERRY (N12) (82>86)** | | | | | | | | | | | |
| 1.0 | RBN12 ; RBLN1/2L/2S/2Y | E | 988 | E10 | M | | | 04/82 ▸ 12/86 | 2140001A10 | | 330 340 | CBS |
| 1.3 | RPN12 ; RPLN1/2H/2L/2Y | E | 1270 | E13 | M | | | 04/82 ▸ 12/86 | 2140001A10 | | 330 340 | CBS |
| 1.5 | ORHN1/2 ; RHLN1/2H/2L ; RHN12//L | E | 1488 | E15 | M | | TSW | 04/82 ▸ 12/86 | 2140005A00 | **819219** | 330 410 | CBS |
| **LAUREL (C32)** | | | | | | | | | | | |
| 2.0 | C32 | E | 1973 | CA20S | M | | | 02/87 ▸ 06/90 | 2141055S00 | **731654** | 410 647 | CBS |
| 2.4 i | C32 | E | 2393 | L24E | M | | | 02/87 ▸ 06/90 | 2140043L00 | **731654** | 410 647 | CBS |
| 3.0 i | C32KUJA | E | 2960 | VG30S | A | | | 03/86 ▸ 06/90 | 2145059L00 | | 410 672 | CBS |
| **MICRA (K11) (92>2000)** | | | | | | | | | | | |
| 1.0 i 16V | EAEAL/BF/DF/FF FREAL/BF/DF/FF | E | 998 | CG10DE | M | +/- | TSW | 08/92 ▸ 02/98 | 2141097B00 | **732718** | 390 377,5 | ALM |

# NISSAN (.../...)

| Type Ctr. | | CC | | AC | | 2+3 | OE | Valeo | DIM. | TECH |
|---|---|---|---|---|---|---|---|---|---|---|
| **MICRA (K11) (92>2000) (.../...)** | | | | | | | | | | |
| 1.0 i 16V EAEAL/BF/DF/FF FREAL/BF/DF/FF | E | 998 | CG10DE | M | +/- | TSW | 08/92 ▸ 06/00 | 2141098B00 | **732718** | 390 377,5 | ALM |
| 1.0 i 16V EAEAL/BF/DF/FF FREAL/BF/DF/FF | E | 998 | CG10DE | M | + | TSW 820037 | 08/92 ▸ 06/00 | 2146097B00 | **731287** | 380 359 | ALB |
| 1.0 i 16V EAEAL/BF/DF/FF FREAL/BF/DF/FF | E | 998 | CG10DE | M | | TSW | 08/92 ▸ 02/98 | 2141097B00 | **732718** | 390 377,5 | ALM |
| 1.0 i 16V EAEAL/BF/DF/FF FREAL/BF/DF/FF | E | 998 | CG10DE | M | | TSW | 02/98 ▸ 06/00 | 2141098B00 | **732718** | 390 377,5 | ALM |
| 1.0 i 16V EAEALFZ ; FAEALFZ | E | 998 | CG10DE | A | + | TSW 820037 | 08/92 ▸ 06/00 | 2146097B00 | **731287** | 380 359 | ALB |
| 1.0 i 16V EAEALFZ ; FAEALFZ | E | 998 | CG10DE | A | | TSW | 08/92 ▸ 02/98 | 2141097B00 | **732718** | 390 377,5 | ALM |
| 1.0 i 16V EAEALFZ ; FAEALFZ | E | 998 | CG10DE | A | | TSW | 02/98 ▸ 06/00 | 2141098B00 | **732718** | 390 377,5 | ALM |
| 1.3 i EANAL/DF/FF/TF ; FANAL/DF/FF | E | 1275 | CG13DE | M | +/- | TSW | 08/92 ▸ 02/98 | 2141097B00 | **732718** | 390 377,5 | ALM |
| 1.3 i EANAL/DF/FF/TF ; FANAL/DF/FF | E | 1275 | CG13DE | M | +/- | TSW | 02/98 ▸ 06/00 | 2141098B00 | **732718** | 390 377,5 | ALM |
| 1.3 i EANAL/DF/FF/TF ; FANAL/DF/FF | E | 1275 | CG13DE | M | + | TSW 820037 | 08/92 ▸ 06/00 | 2146097B00 | **731287** | 380 359 | ALB |
| 1.3 i EANAL/DF/FF/TF ; FANAL/DF/FF | E | 1275 | CG13DE | M | | TSW | 08/92 ▸ 02/98 | 2141097B00 | **732718** | 390 377,5 | ALM |
| 1.3 i EANAL/DF/FF/TF ; FANAL/DF/FF | E | 1275 | CG13DE | M | | TSW | 02/98 ▸ 06/00 | 2141098B00 | **732718** | 390 377,5 | ALM |
| 1.3 i EANAL/DZ/FZ ; FANAL/DZ/FZ | E | 1275 | CG13DE | A | + | TSW 820037 | 08/92 ▸ 06/00 | 2146097B00 | **731287** | 380 359 | ALB |
| 1.3 i EANAL/DZ/FZ ; FANAL/DZ/FZ | E | 1275 | CG13DE | A | | TSW | 08/92 ▸ 02/98 | 2141097B00 | **732718** | 390 377,5 | ALM |
| 1.3 i EANAL/DZ/FZ ; FANAL/DZ/FZ | E | 1275 | CG13DE | A | | TSW | 02/98 ▸ 06/00 | 2141098B00 | **732718** | 390 377,5 | ALM |
| 1.5 D ECAK11U ; FCAK11U | D | 1527 | TD15 | M | +/- | TSW | 04/98 ▸ 06/00 | 214106F600 | **732718** | 390 377,5 | ALM |
| **MICRA (K11) (2000>2002)** | | | | | | | | | | |
| 1.0 i 16V K11 | E | 998 | CG10DE | M | | TSW | 07/00 ▸ 09/00 | 2141098B00 | **732718** | 390 377,5 | ALM |
| 1.0 i 16V K11 | E | 998 | CG10DE | M | | TSW | 10/00 ▸ 12/02 | 214101F520 | **732718** | 390 377,5 | ALM |
| 1.4 i 16V K11 | E | 1348 | CGA3 | M | | TSW | 07/00 ▸ 09/00 | 214101F515 | **732718** | 390 377,5 | ALM |
| 1.4 i 16V K11 | E | 1348 | CGA3 | M | | TSW | 10/00 ▸ 12/02 | 214101F520 | **732718** | 390 377,5 | ALM |
| 1.5 D K11 | D | 1527 | TD15 | M | | TSW | 07/00 ▸ 12/02 | 214106F600 | **732718** | 390 377,5 | ALM |
| **MICRA (K12) (2003>)** | | | | | | | | | | |
| 1.0 i 16V EAAK12 ; FAAK12 | E | 998 | CG10DE | M | | | 01/03 ▸ 05/05 | 21400AX600 | **734246** | 380 445 | ALB |
| 1.2 i 16V EBAK12 ; FBAK12 | E | 1240 | CG12DE | M | | | 01/03 ▸ 05/05 | 21410AX600 | **734246** | 380 445 | ALB |
| 1.2 i 16V EBAK12 ; FBAK12 | E | 1240 | CG12DE | A | | | 01/03 ▸ 05/05 | 21460AX800 | **734247** | 380 445 | ALB |
| 1.4 i 16V ECAK12 ; FCAK12 | E | 1386 | CGA3DE | M | | | 01/03 ▸ 05/05 | 21400AX600 | **734246** | 380 445 | ALB |
| 1.4 i 16V ECAK12 ; FCAK12 | E | 1386 | CGA3DE | A | | | 01/03 ▸ 05/05 | 21400AX600 | **734246** | 380 445 | ALB |
| 1.5 dCi EDAK12 ; FDAK12 | D | 1461 | K9K.7 | M | | | 01/03 ▸ 05/05 | 21410AY600 | **732903** | 494 403 | ALM |
| **MICRA (2005>)** | | | | | | | | | | |
| 1.2 i 16V EBAK12 ; FBAK12 | E | 1240 | CR12DE | M | | | 06/05 ▸ | 21400AX600 | **734246** | 380 445 | ALB |
| 1.2 i 16V | E | 1240 | CR12DE | A | | | 06/05 ▸ | 21460AX800 | **734247** | 380 445 | ALB |
| 1.4 i 16V | E | 1386 | CR14DE | A | | | 06/05 ▸ | 21460AX800 | **734247** | 380 445 | ALB |
| 1.6 i 16V | E | 1598 | HR16DE | A | +/- | | 08/05 ▸ 04/09 | 21460AX800 | **734247** | 380 445 | ALB |
| 1.5 dCi | D | 1461 | K9K.7 | M | +/- | | 06/05 ▸ 09/07 | 21410BC500 | •**734437** | 510 377,7 | ALB |
| 1.5 dCi | D | 1461 | K9K.7 | M | +/- | | 09/07 ▸ | 21410BC510 | •**734436** | 510 377,7 | ALB |
| 1.5 dCi | D | 1461 | K9K.7 | M | - | | 06/05 ▸ | 21410AY601 | **732903** | 494 403 | ALM |
| 1.5 dCi | D | 1461 | K9K.7 | M | - | | 06/05 ▸ | 21410BC500 | •**734437** | 510 377,7 | ALB |
| 1.5 dCi | D | 1461 | K9K.7 | M | | | 06/05 ▸ | 21410AY602 | **732903** | 494 403 | ALM |
| 1.5 dCi | D | 1461 | K9K.7 | M | | | 06/05 ▸ | 21410BC510 | •**734436** | 510 377,7 | ALB |
| **MURANO (2005>2008)** | | | | | | | | | | |
| 3.5 i V6 24V Z50L35E | E | 3498 | VQ35DE | A | | | 02/05 ▸ 06/08 | 21460CA010 | **735204** | 450 729 | ALB |
| **NOTE (2005>2007)** | | | | | | | | | | |
| 1.4 i 16V | E | 1386 | CR14DE | M | + | | 09/05 ▸ 12/07 | 21410AX600 | **734246** | 380 445 | ALB |
| 1.6 i 16V | E | 1598 | HR16DE | M | + | | 09/05 ▸ 12/07 | 21460AX800 | **734247** | 380 445 | ALB |
| 1.6 i 16V | E | 1598 | HR16DE | A | + | | 09/05 ▸ 12/07 | 21460AX800 | **734247** | 380 445 | ALB |
| 1.5 dCi | D | 1461 | K9K.7 | M | + | | 09/05 ▸ 12/07 | 21410BC510 | •**734436** | 510 377,7 | ALB |
| 1.5 dCi | D | 1461 | K9K.7 | M | - | | 09/05 ▸ 12/07 | 21410BC500 | •**734437** | 510 377,7 | ALB |
| **NOTE (2008>)** | | | | | | | | | | |
| 1.5 dCi 106,1.5 dCi 68 FTKAL/-F/-Y ; FTKAR<br>1.5 dCi 86 -F/-Y | D | 1461 | K9K.7,K9K.7/F | M | | | 01/08 ▸ | 21410BC510 | •**734436** | 510 377,7 | ALB |
| **PATHFINDER (D21)** | | | | | | | | | | |
| 2.4 WNLYD21 | E | 2389 | Z24 | M | | | 08/86 ▸ 02/98 | 2140015G01 | **731085** | 430 648 | CBS |
| **PATROL 160 (80>85)** | | | | | | | | | | |
| 2.8 WMLG160 ; KML16/0F/0Q | E | 2753 | L28 | M | | | 07/80 ▸ 1988 | 21400C6400 | | 640 430 | CBS |
| 3.3 D TRL160L ; URLG160 ; WRLG160 ; KRL16/0Q | D | 3246 | SD33 | M | | | 07/80 ▸ 07/85 | 21400C6011 | **732596** | 640 436 | CBS |

Radiator Radiateur Motorkühler Radiatore di raffreddamento Radiator Radyatör Radiador Радиатор vízhűtő Vodní chladič Radiator Ψυγείο



• **New** Nouveau **Nuevo** Novo **Nuovo** Nieuw **Neu** Nowość **Yeni** Новый Νέο **Novy**

# NISSAN (.../...)

| | | | CC | | AC | | | OE | Valeo | DIM. | | TECH |
|---|---|---|---|---|---|---|---|---|---|---|---|---|
| **PATROL 160 (80>85) (.../...)** | | | | | | | | | | | | |
| 3.3 TD | KRL160F ; TRL160L WRLG160 ; CRLG1/60 | D | 3246 | SD33T | M | | | 08/83 ▸ 1988 | 21400C8200 | **732596** | 640 | 436 | CBS |
| **PATROL 260 (84>)** | | | | | | | | | | | | |
| 2.8 | WMLG260 ; KML26/0F/0Q/0X | E | 2753 | L28 | M | | | 11/84 ▸ 02/89 | 21400G9600 | | 640 | 430 | CBS |
| 3.0 | KSL260F ; WSLG260 | E | 2962 | RB30S | M | | | 01/90 ▸ 03/96 | 21400G9802 | **734819** | 740 | 454 | ALB |
| 2.8 D | APLG2/60 ; KPL260X ; TPL260Q ; JPL26/0Q/0X | D | 2820 | A428 | M | | | 11/84 ▸ 02/89 | 21400G9605 | | 640 | 440 | CBS |
| 2.8 TD | CYLG260 ; KYL260F PYL260G ; TYL260L ; WYLG260 ; AYLG2/60 | D | 2826 | RD28T | M | +/- | | 04/90 ▸ 03/96 | 21400G9803 | **732589** | 740 | 449 | ALB |
| 2.8 TD | CYLG260 ; KYL260F PYL260G ; TYL260L ; WYLG260 ; AYLG2/60 | D | 2826 | RD28T | M | + | | 04/90 ▸ | 21400G9806 | **732589** | 740 | 449 | ALB |
| 2.8 D | JYL260F ; KYL260F ; TYL260L ; WYLG260 AYLG2/60 | D | 2826 | RD28 | M | | | 01/90 ▸ 03/96 | 21400G9802 | **734819** | 740 | 454 | ALB |
| 3.3 TD | KRL260F ; PRL260L TRL260L ; WRLG260 ; CRLG2/60 | D | 3246 | SD33T | M | | | 11/84 ▸ 01/88 | 21400C8200 | **732596** | 640 | 436 | CBS |
| 3.3 D | GRL260X ; JRL260X ; KRL260F ; TRL260L WRLG260 ; ARLG2/60 | D | 3246 | SD33 | M | | | 11/84 ▸ 03/86 | 21400C6011 | **732596** | 640 | 436 | CBS |
| 3.3 D | GRL260X ; JRL260X ; KRL260F ; TRL260L WRLG260 ; ARLG2/60 | D | 3246 | SD33 | M | | | 03/86 ▸ 02/89 | 21400G9603 | **732596** | 640 | 436 | CBS |
| 3.3 TD | KRL260F ; PRL260L TRL260L ; WRLG260 ; CRLG2/60 | D | 3246 | SD33T | M | | | 01/88 ▸ 02/89 | 21400G9604 | **732596** | 640 | 436 | CBS |
| **PRAIRIE (M10) (82>88)** | | | | | | | | | | | | |
| 1.5 | BLM10HF | E | 1488 | E15S | M | | TSW | 09/82 ▸ 02/85 | 2140005A00 | **819219** | 330 | 410 | CBS |
| 1.5 | BLM10HF | E | 1488 | E15S | M | | TSW | 02/85 ▸ 09/88 | 2140035A00 | **819219** | 330 | 410 | CBS |
| 1.8 | PLM10/HF/TH | E | 1809 | CA18,CA18S | M | | | 09/82 ▸ 09/88 | 2140021R00 | | 670 | 322 | CBS |
| 1.8 | PLM10HF | E | 1809 | CA18,CA18S | M | | | 09/82 ▸ 02/85 | 2140004R00 | | | | |
| 1.8 | PLM10/HA/TH | E | 1809 | CA18 | A | | | 09/82 ▸ 09/88 | 2140021R00 | | 670 | 322 | CBS |
| **PRAIRIE (M11) (88>95)** | | | | | | | | | | | | |
| 2.0 i | LM11TJE ; LM11J/EQ ; LNM11/JE/TJ | E | 1973 | CA20E | M | + | | 10/90 ▸ 03/92 | 2141044R01 | **731656** | 380 | 691 | ALB |
| 2.0 | LM11Q ; LM11J/Q ; LM11T/JQ/Q ; LNM11/JQ/TJ | E | 1973 | CA20S | M | - | | 10/88 ▸ 09/90 | 2141032R00 | | | | |
| 2.0 i | LM11TJE ; LM11J/EQ ; LNM11/JE/TJ | E | 1973 | CA20E | M | - | | 10/88 ▸ 09/90 | 2141051E00 | **731656** | 380 | 691 | ALB |
| 2.0 i | LM11TJE ; LM11J/EQ ; LNM11/JE/TJ | E | 1973 | CA20E | M | - | | 10/88 ▸ 1992 | 2141051E01 | **731656** | 380 | 691 | ALB |
| 2.0 i | LM11TJA ; LM11J/AE ; LNM11/JA/TJ | E | 1973 | CA20E | A | + | | 10/90 ▸ 03/92 | 2141044R01 | **731656** | 380 | 691 | ALB |
| 2.0 i | LM11TJA ; LM11J/AE ; LNM11/JA/TJ | E | 1973 | CA20E | A | - | | 1990 ▸ 1992 | 2141051E01 | **731656** | 380 | 691 | ALB |
| 2.0 i | LM11TJA ; LM11J/AE ; LNM11/JA/TJ | E | 1973 | CA20E | A | | | 10/88 ▸ 09/90 | 2146044R00 | **731657** | 380 | 691 | ALB |
| 2.0 i | LM11TJA ; LM11J/AE ; LNM11/JA/TJ | E | 1973 | CA20E | A | | | 10/88 ▸ 03/92 | 2146044R01 | **731657** | 380 | 691 | ALB |
| **PRIMERA (P10) (90>96)** | | | | | | | | | | | | |
| 1.6 | TAYAL/DF/FF | E | 1597 | GA16DEC | M | + | | 04/93 ▸ 01/98 | 2141081N00 | | 340 | 648 | CBS |
| 1.6 | 0AYAL/FF ; BAYAL/BF/DF/FF ; BBYALFF ; BAYAR BF/DF ; FAYAL/BF/DF/FF ; FAYAR/BF/DF | E | 1597 | GA16DS | M | | | 02/90 ▸ 04/93 | 2141070J00 | **731090** | 340 | 648 | ALB |
| 1.6 | TAYLDFW ; TAYAL/DF/FF | E | 1597 | GA16DS | M | | | 07/90 ▸ 04/93 | 2141081N00 | | 340 | 648 | CBS |
| 1.6 | 0AYAL/FF ; BAYAL/BF/DF/FF ; BBYALFF ; BAYAR BF/DF ; FAYAL/BF/DF/FF ; FAYAR/BF/DF | E | 1597 | GA16DS | M | | | 11/91 ▸ 05/96 | 2141070J01 | **731090** | 340 | 648 | ALB |
| 1.6 | TAYAL/DF/FF | E | 1597 | GA16DEC | M | | | 01/95 ▸ 01/98 | 2141053J00 | **731659** | 340 | 647 | ALB |
| 2.0,2.0 16V,2.0 e 16V 2.0 i,2.0 i 16V | BBYARUF ; BBYAL/UF VF ; FBYALVF FBYARUF ; FBYNLFF ; BBYNL/FF/UF | E | 1998 | SR20DE,SR20DI | M | | | 02/90 ▸ 05/96 | 2141072J00 | **731090** | 340 | 648 | ALB |
| 2.0,2.0 i | BBYAL/DF/FF/GF BBYAR/DF/GE ; FBYAL/DF/FF/GF ; FBYAR/DF/FF GE | E | 1998 | SR20DI | M | | | 02/90 ▸ 11/91 | 2141071J00 | **731090** | 340 | 648 | ALB |
| 2.0,2.0 16V,2.0 e 16V 2.0 i,2.0 i 16V | BBYARUF ; BBYAL/UF VF ; FBYALVF FBYARUF ; FBYNLFF ; BBYNL/FF/UF | E | 1998 | SR20DE,SR20DI | M | | | 06/90 ▸ 05/96 | 2141072J01 | **731090** | 340 | 648 | ALB |
| 2.0 | TBYAL/DF/FF/GF | E | 1998 | SR20DI | M | | | 07/90 ▸ 01/98 | 2141062J00 | | 340 | 648 | CBS |
| 2.0,2.0 i | BBYAL/FA/GA ; BBYAR DA/FA/GA ; FBYAL/FA/GA ; FBYAR/DA/FA/GA | E | 1998 | SR20DI | A | | | 02/90 ▸ 11/91 | 2146071J00 | | 340 | 648 | CBS |
| 2.0 | TBYAL/DA/DF/FA/FF/GA/GF | E | 1998 | SR20DI | A | | | 07/90 ▸ 01/98 | 2146062J01 | **734152** | 340 | 647 | ALB |
| 2.0 D | TVCAL/DF/FF | D | 1974 | CD20 | M | | | 07/90 ▸ 05/96 | 2141074N00 | **731674** | 360 | 691 | ALB |
| 2.0 D | | D | 1974 | CD20 | M | | | 09/90 ▸ 05/96 | 2141072J20 | **731193** | 340 | 650 | CBS |
| **PRIMERA (P11) (96>2001)** | | | | | | | | | | | | |
| 1.6 i 16V | BAYAL/DF/FF ; FAYAL DF/FF | E | 1597 | GA16DEB | M | | | 06/96 ▸ 02/02 | 214102F000 | **732528** | 360 | 665 | ALB |
| 1.6 i 16V | BAYAL/DF/FF ; FAYAL DF/FF ; WAYAL/BF/DF/FF/GF/TF ; WAYAR/DF/TF | E | 1597 | GA16DEB,GA16DEF | M | | | 06/96 ▸ 02/02 | 214109F502 | **732528** | 360 | 665 | ALB |
| 1.6 i 16V | WAYAL/BF/DF/FF/GF TF ; WAYAR/DF/TF | E | 1597 | GA16DEB,GA16DEF | M | | | 01/98 ▸ 02/02 | 214109F500 | **732528** | 360 | 665 | ALB |

| Type Ctr. | | CC | | AC | | 2+3 | OE | Valeo | DIM. | TECH |
|---|---|---|---|---|---|---|---|---|---|---|
| **NISSAN** (.../...) | | | | | | | | | | |
| **PRIMERA (P11) (96>2001) (.../...)** | | | | | | | | | | |
| 2.0 i 16V BBYAL/DF/FF/GF/TF UF ; WBYAEGF ; FBYAL/DF/FF/GF/TF/UF ; WBYAL DF/FF/GF/TF ; WBYAR/DF/FF | E | 1998 | SR20DE | M | | 06/96 ▸ 02/02 | 214109F502 | **732528** | 360 665 | ALB |
| 2.0 i 16V BBYAL/DF/FF/GF/TF UF ; FBYAL/DF/FF/GF/TF/UF | E | 1998 | SR20DE | M | | 06/96 ▸ 02/02 | 214102F000 | **732528** | 360 665 | ALB |
| 2.0 i 16V WBYAE/GF ; WBYAL/DF FF/GF/TF ; WBYAR/DF/FF | E | 1998 | SR20DE | M | | 01/98 ▸ 08/01 | 214109F500 | **732528** | 360 665 | ALB |
| 2.0 i 16V WBYALFW ; WBYARFW | E | 1998 | SR20DEF | M | | 07/01 ▸ 02/02 | 214109F511 | **732528** | 360 665 | ALB |
| 2.0 i 16V BBYAL/DA/GA ; FBYAL DA/GA | E | 1998 | SR20DE | A | | 06/96 ▸ 02/02 | 214609F511 | **734215** | 360 695 | ALB |
| 2.0 i 16V | E | 1998 | SR20DE,SR20DEF | A | | 07/01 ▸ 02/02 | 214109F511 | **732528** | 360 665 | ALB |
| 2.0 TD BVCAL/DF/FF ; FVCAL DF/FF ; WVCAL/DF/FF/GF ; WVCAR/DF/FF | D | 1974 | CD20T | M | | 06/96 ▸ 02/02 | 214102F600 | **732529** | 360 709 | ALB |
| **PRIMERA (P12) (2001>)** | | | | | | | | | | |
| 1.6 i 16V | E | 1596 | QG16DE | M | | 03/02 ▸ 2006 | 21410BM402 | **734736** | 360 695 | ALB |
| 1.8 i 16V | E | 1769 | QG18DE | M | | 03/02 ▸ 2006 | 21410BM402 | **734736** | 360 695 | ALB |
| 1.8 i 16V | E | 1769 | QG18DE | A | | 03/02 ▸ 2006 | 21460AV700 | **734473** | 360 695 | ALB |
| 2.0 i 16V BDAAR/BZ/SZ ; TDAAR BZ/SZ ; TDANR/BA/SA | E | 1998 | QR20DE | A | | 02/01 ▸ 2006 | 21460AV600 | **734706** | 360 689 | ALB |
| 1.9 dCi | D | 1870 | F9Q | M | | 01/03 ▸ 2006 | 21410BV010 | **735061** | 360 689 | ALB |
| 2.2 VDi 16V,2.2 dCi 16V | D | 2184 | YD22DDT | M | | 02/02 ▸ 2006 | 21410BN301 | **734708** | 360 689 | ALB |
| **QASHQAI (2007>2010)** | | | | | | | | | | |
| 1.6 i FDTAL-F ; FDTAR-F | E | 1598 | HR16DE | M | | 03/07 ▸ 01/10 | 21400JD000 | **735119** | 590 451,5 | ALM |
| 2.0 i FDRAR-Y ; FDRNL-Y ; FDRNR-Y ; FDRAL/-Y | E | 1997 | MR20DE | M | | 03/07 ▸ 01/10 | 21400JD200 | **735118** | 590 451,5 | ALM |
| 2.0 i FDRNL-Z ; FDRNR-Z | E | 1997 | MR20DE | A | | 03/07 ▸ 01/10 | 21400JD900 | **735116** | 590 450,7 | ALB |
| 1.5 dCi | D | 1461 | K9K.7.64 | M | | 03/07 ▸ | 21400JD50A | **735114** | 590 451,5 | ALB |
| **QASHQAI** | | | | | | | | | | |
| 1.5 dCi | D | 1461 | K9K-1.5/F,K9K.7.64 | M | | 12/09 ▸ 01/10 | 21410JD50C | •**735381** | 590 451,5 | |
| **QASHQAI (2007>2010)** | | | | | | | | | | |
| 2.0 dCi FTYAR-Y ; FTYNL-Y FTYNR-Y ; FTYAL/-Y | D | 1995 | M9R/F | M | | 03/07 ▸ 01/10 | 21400JD70A | **735115** | 628 438,2 | ALB |
| 2.0 dCi FTYNL-M ; FTYNR-M | D | 1995 | M9R/F | A | | 03/07 ▸ 01/10 | 21400JD70A | **735115** | 628 438,2 | ALB |
| **SERENA (C23M)** | | | | | | | | | | |
| 1.6 i AAYVL/EF/GF ; EAYVL/EF/GF | E | 1597 | GA16DEE | M | | 07/92 ▸ 12/97 | 214109C001 | **732484** | 423 685 | CBS |
| 1.6 i AAYVL/EF/GF ; EAYVL/EF/GF | E | 1597 | GA16DEE | M | | 12/97 ▸ 11/01 | 214107C002 | **734446** | 420 684 | ALB |
| 2.0 i EBYALGF ; ABYAL/GF/HF | E | 1998 | SR20DEA | M | | 07/92 ▸ 12/97 | 214109C001 | **732484** | 423 685 | CBS |
| 2.0 i EBYALGF ; ABYAL/GF/HF | E | 1998 | SR20DEA | M | | 12/97 ▸ 11/01 | 214107C002 | **734446** | 420 684 | ALB |
| 2.0 D AVEAL/HF ; AVEVL/EF/GF/HF ; EVEVL/EF/GF | D | 1952 | LD20 | M | | 07/92 ▸ 09/94 | 214109C101 | **732484** | 423 685 | CBS |
| 2.0 D AVEAL/HF ; AVEVL/EF/GF/HF ; EVEVL/EF/GF | D | 1952 | LD20 | M | | 07/92 ▸ 09/94 | 214109C002 | **734671** | 423 685 | ALB |
| 2.3 D AVFVLEF ; AVFAL/HF ; EVFVL/EF/GF | D | 2283 | LD23 | M | | 09/94 ▸ 11/01 | 214107C002 | **734446** | 420 684 | ALB |
| 2.3 D AVFVLEF ; AVFAL/HF ; EVFVL/EF/GF | D | 2283 | LD23 | M | | 09/94 ▸ 1996 | 214109C602 | **734446** | 420 684 | ALB |
| **SUNNY (B11) (82>86)** | | | | | | | | | | |
| 1.3 B11/ ; LB11 ; LB115K ; KLB11//F/FG/FQ/G LB11G ; LB11F//G/Q/QG ; LB11Q//G ; LB11R/FG FQ/Q/QG/S/SQ ; TLB11RS ; TVLB11R ; LB11S//K VLB11//G/Q/QG/RS/S/SQ ; WL131/1/1F/1G | E | 1270 | E13,E13S | M | | 10/81 ▸ 1986 | 2140001A10 | | 330 340 | CBS |
| 1.5 HB11/ ; KHB11 ; KHLB11F ; OHB11 ; OKHB11 OWHB11 ; WHB11 ; HLB11//F/FG/FK/FQ/G/Q/QG RF/RQ | E | 1488 | E15,E15S | M | TSW | 10/81 ▸ 1986 | 2140005A00 | **819219** | 330 410 | CBS |
| 1.5 KHLB11A | E | 1488 | E15S | A | TSW | 03/82 ▸ 1986 | 2140005A00 | **819219** | 330 410 | CBS |
| **SUNNY (N13) (86>90)** | | | | | | | | | | |
| 1.0 FMLN13D | E | 988 | E10S | M | | 06/86 ▸ 10/88 | 2141059A00 | | 590 349 | CBS |
| 1.0 FMLN13L ; RMLN13L | E | 988 | E10S | M | TSW | 06/86 ▸ 10/87 | 2141050A11 | **730404** | 490 348 | CBS |
| 1.0 FMLN13L ; RMLN13L | E | 988 | E10S | M | TSW | 10/87 ▸ 10/88 | 2141050A20 | **730404** | 490 348 | CBS |
| 1.3 BLN13/DF/HF ; FBLN1/3D/3H ; RBLN1/3H/3L | E | 1270 | E13S | M | | 06/86 ▸ 10/90 | 2141059A00 | | 590 349 | CBS |
| 1.3 BLN13/DF/HF/LQ ; FBLN1/3D/3H ; RBLN1/3D/3F 3H/3L | E | 1270 | E13S | M | TSW | 06/86 ▸ 10/88 | 2141050A20 | **730404** | 490 348 | CBS |
| 1.3 BLN13/DF/HF/LQ ; FBLN1/3D/3H ; RBLN1/3D/3F 3H | E | 1270 | E13S | M | TSW | 06/86 ▸ 10/87 | 2141050A11 | **730404** | 490 348 | CBS |
| 1.3 BLN13/DA ; FBLN1/3D/3H ; RBLN1/3D/3H | E | 1270 | E13S | A | TSW 820827 | 06/86 ▸ 10/90 | 2146059A00 | **731082** | 590 349 | CBS |
| 1.3 BLN13/DA/HA ; FBLN1/3D/3H ; RBLN1/3D/3H | E | 1270 | E13S | A | TSW 820827 | 06/86 ▸ 10/88 | 2146052A00 | **731082** | 590 349 | CBS |
| 1.4 ULN13DF ; FULN1/3D/3H | E | 1392 | GA14S | M | | 10/88 ▸ 10/90 | 2141083A00 | **730407** | 500 349 | CBS |

Radiator Radiateur Motorkühler Radiatore di raffreddamento Radiator Radyatör Radiador Радиатор vízhűtő Vodní chladič Radiator Ψυγείο



• **New** Nouveau **Nuevo** Novo **Nuovo** Nieuw **Neu** Nowość **Yeni** Новый Νέο **Nový**

## SUNNY (N13) (86>90) (.../...)

| | | | | | | | | | | | | | |
|---|---|---|---|---|---|---|---|---|---|---|---|---|---|
| 1.4 | FULN1/3D/3H ; RULN1/3D/3H/3L ; ULN13/DF/HF LF | E | 1392 | GA14S | M | | TSW | 10/88 ▸ 10/90 | 2141077A00 | **730406** | 490 | 348 | CBS |
| 1.4 | FULN1/3H ; ULN13HA ; RULN1/3D/3H | E | 1392 | GA14S | A | | TSW | 10/88 ▸ 10/90 | 2146078A00 | **731083** | 590 | 349 | CBS |
| 1.5 | HLN13HF ; RHLN13H ; FHLN1/3H | E | 1488 | E15S | M | | | 06/86 ▸ 10/88 | 2141059A00 | | 590 | 349 | CBS |
| 1.5 | HLN13HF ; FHLN1/3H ; RHLN1/3D/3H | E | 1488 | E15S | M | | TSW | 06/86 ▸ 10/87 | 2141050A11 | **730404** | 490 | 348 | CBS |
| 1.5 | HLN13HF ; FHLN1/3H ; RHLN1/3D/3H | E | 1488 | E15S | M | | TSW | 10/87 ▸ 10/88 | 2141050A20 | **730404** | 490 | 348 | CBS |
| 1.5 | HLN13HA ; RHLN13H | E | 1488 | E15S | A | | TSW 820827 | 06/86 ▸ 10/88 | 2146052A00 | **731082** | 590 | 349 | CBS |
| 1.5 | FHLN13H ; HLN13HA | E | 1488 | E15S | A | | TSW 820827 | 06/86 ▸ 10/88 | 2146059A00 | **731082** | 590 | 349 | CBS |
| 1.6 | GLN13HF ; GLNN13H | E | 1597 | GA16S | M | | | 10/88 ▸ 10/90 | 2141083A00 | **730407** | 500 | 349 | CBS |
| 1.6 i | FGLN1/3D/3H/3W ; GLNN13H ; GLN13/DF/HF/WF RGLN1/3D/3H | E | 1597 | GA16I | M | | TSW | 10/88 ▸ 10/90 | 2141077A00 | **730406** | 490 | 348 | CBS |
| 1.6,1.6 i | FGLN1/3H/3W RGLN13H ; GLN13/HA/WA | E | 1597 | GA16I,GA16S | A | | TSW | 10/88 ▸ 10/90 | 2146078A00 | **731083** | 590 | 349 | CBS |
| 1.6 | GLN13HA | E | 1597 | GA16S | A | | | 10/88 ▸ 10/90 | 2146083A00 | **731661** | 590 | 349 | CBS |
| 1.6 i | PLNN13H | E | 1598 | E16I | M | | | 06/86 ▸ 10/90 | 2141070A00 | | 590 | 349 | CBS |
| 1.6,1.6 i | FPLN1/3D/3H/3W PLNN13H ; RHLN13H ; RPLN13H ; PLN13/DF/HF WF | E | 1598 | E16I,E16S | M | | TSW | 06/86 ▸ 10/87 | 2141050A11 | **730404** | 490 | 348 | CBS |
| 1.6 i | PLN13HF ; RPLN13H ; FPLN1/3H | E | 1598 | E16I | M | | | 08/86 ▸ 10/90 | 2141059A00 | | 590 | 349 | CBS |
| 1.6,1.6 i | FPLN1/3D/3H/3W PLNN13H ; RHLN13H ; RPLN13H ; PLN13/DF/HF WF | E | 1598 | E16I,E16S | M | | TSW | 08/86 ▸ 10/88 | 2141050A20 | **730404** | 490 | 348 | CBS |
| 1.6,1.6 16V | ELN13WF ; RELN13S | E | 1598 | CA16D | M | | | 02/87 ▸ 10/88 | 2141058A00 | **731147** | 590 | 349 | CBS |
| 1.6,1.6 i | FPLN1/3H ; RPLN13H PLN13/HA/WA | E | 1598 | E16I,E16S | A | | TSW 820827 | 06/86 ▸ 10/88 | 2146052A00 | **731082** | 590 | 349 | CBS |
| 1.6 i | PLN13HA | E | 1598 | E16I | A | | TSW 820827 | 08/86 ▸ 10/90 | 2146059A00 | **731082** | 590 | 349 | CBS |
| 1.8 16V | FCLN13S ; RCLN13S | E | 1809 | CA18D | M | | | 10/88 ▸ 10/90 | 2141058A00 | **731147** | 590 | 349 | CBS |
| 1.7 D | FSLN1/3D/3H ; RSLN1/3D/3H ; SLN13/DF/HF | D | 1681 | CD17 | M | | | 06/86 ▸ 10/90 | 2141054A00 | **730408** | 590 | 349 | CBS |
| 1.7 D | SLN13HA | D | 1681 | CD17 | A | | | 06/86 ▸ 10/88 | 2146054A00 | | 590 | 351 | CBS |

## SUNNY (B12) (86>90)

| | | | | | | | | | | | | | |
|---|---|---|---|---|---|---|---|---|---|---|---|---|---|
| 1.5 | KHLB12H ; WHLB12H | E | 1488 | E15S | M | | TSW | 06/86 ▸ 06/87 | 2141050A11 | **730404** | 490 | 348 | CBS |
| 1.6 i | WGLNB12 | E | 1597 | GA16I,GA16S | M | | | 10/88 ▸ 05/90 | 2141069A00 | | | | |
| 1.6,1.6 i | KGLB1/2H/2J ; WGLB1 2F/2H/2J | E | 1597 | GA16I,GA16S | M | | TSW | 10/88 ▸ 05/90 | 2141077A00 | **730406** | 490 | 348 | CBS |
| 1.6,1.6 i | KGLB1/2H/2J ; WGLB1 2H/2J | E | 1597 | GA16I,GA16S | A | | TSW | 10/88 ▸ 05/90 | 2146078A00 | **731083** | 590 | 349 | CBS |
| 1.6 16V | KELB12H | E | 1598 | CA16D | M | | | 06/86 ▸ 09/88 | 2141058A00 | **731147** | 590 | 349 | CBS |
| 1.6 | WPLB12F | E | 1598 | E16S | M | | | 06/86 ▸ 09/88 | 2141059A00 | | 590 | 349 | CBS |
| 1.6,1.6 i | KPLB1/2H/2J ; WPLB1 2F/2H/2J | E | 1598 | E16I,E16S | M | | TSW | 06/86 ▸ 09/88 | 2141050A11 | **730404** | 490 | 348 | CBS |
| 1.6 | WPLNB12 | E | 1598 | E16I,E16S | M | | | 09/86 ▸ 09/88 | 2141069A00 | | | | |
| 1.6,1.6 i | KPLB1/2H/2J ; WPLB1 2H/2J | E | 1598 | E16I | A | | TSW | 06/86 ▸ 09/88 | 2141050A11 | **730404** | 490 | 348 | CBS |
| 1.6 | KPLB1/2H/2J ; WPLB1/2H/2J | E | 1598 | E16S | A | | TSW 820827 | 06/86 ▸ 09/88 | 2146052A00 | **731082** | 590 | 349 | CBS |
| 1.8 i 16V | KULB12J | E | 1809 | CA18D | M | | | 10/88 ▸ 05/90 | 2141058A00 | **731147** | 590 | 349 | CBS |
| 1.7 D | WSLB1/2F/2H | D | 1681 | CD17 | M | | | 06/86 ▸ 05/90 | 2141054A00 | **730408** | 590 | 349 | CBS |

## SUNNY (N14) (90>95)

| | | | | | | | | | | | | | |
|---|---|---|---|---|---|---|---|---|---|---|---|---|---|
| 1.4,1.4 i 16V | BAVAL/BF/DF/FF EAVAL/BD/BF/DF/FF ; VAVALDF ; FAVAL/DF/FF | E | 1392 | GA14DE,GA14DS | M | | | 10/90 ▸ 05/95 | 2141062C01 | **731664** | 320 | 647 | ALB |
| 1.4 | EAVALDA ; FAVALFA ; VAVALDA ; BAVAL/FA | E | 1392 | GA14DS | A | | | 10/90 ▸ 10/92 | 2146065Y02 | **731662** | 320 | 647 | ALB |
| 1.6 | EAYALFF ; FAYALFF ; BAYAL/FF | E | 1597 | GA16DS | M | + | TSW | 10/90 ▸ 05/95 | 2141057Y02 | **731665** | 320 | 647 | ALB |
| 1.6,1.6 i | EAYALFF ; FAYALFF BAYAL/DF/FF | E | 1597 | GA16DEE,GA16DS | M | | | 10/90 ▸ 05/95 | 2141062C01 | **731664** | 320 | 647 | ALB |
| 1.6,1.6 i | BAYNLFF | E | 1597 | GA16DEE,GA16DS | M | | | 10/90 ▸ 09/93 | 2141062Y01 | **731670** | 320 | 647 | ALB |
| 1.6 i | BAYNLFF | E | 1597 | GA16DEE | M | | | 09/93 ▸ 05/95 | 2141062Y02 | **731670** | 320 | 647 | ALB |
| 1.6 | EAYALFA ; FAYALFA ; BAYAL/FA | E | 1597 | GA16DS | A | | | 10/90 ▸ 10/92 | 2146065Y02 | **731662** | 320 | 647 | ALB |
| 2.0 16V | EBYAL/UF ; FBYAL/UF UN | E | 1998 | SR20DEB | M | | TSW | 10/90 ▸ 09/93 | 2141059Y01 | **731202** | 646 | 322 | ALB |
| 2.0 16V | EBYALUF | E | 1998 | SR20DEB | M | | TSW | 09/93 ▸ 05/95 | 2141059Y02 | **731665** | 320 | 647 | ALB |
| 2.0 16V | FBYAL/UF/UN | E | 1998 | SR20DEB | M | | TSW | 09/93 ▸ 05/95 | 2141057Y02 | **731665** | 320 | 647 | ALB |
| 2.0 D | BVCAL/DF/FF ; EVCAL/DF/FF ; FVCAL/DF/FF | D | 1974 | CD20 | M | | TSW | 10/90 ▸ 05/95 | 2141065C01 | **731202** | 646 | 322 | ALB |

## SUNNY (Y10) (90>96)

| | | | | | | | | | | | | | |
|---|---|---|---|---|---|---|---|---|---|---|---|---|---|
| 1.6,1.6 i 16V | TAYNLFF ; WAYALBF TAYAL/DF/FF | E | 1597 | GA16DE,GA16DS | M | | | 10/90 ▸ 12/96 | 2141062Y01 | **731670** | 320 | 647 | ALB |
| 1.7 D | WVAALBF | D | 1681 | CD17 | M | | TSW | 05/92 ▸ 04/96 | 2141059Y02 | **731665** | 320 | 647 | ALB |

| Type Ctr. | | CC | | AC | | 2+3 | OE | Valeo | DIM. | TECH |
|---|---|---|---|---|---|---|---|---|---|---|
| **NISSAN (.../...)** | | | | | | | | | | |
| **SUNNY (Y10) (90>96) (.../...)** | | | | | | | | | | |
| 1.7 D WVAALBF | D | 1681 | CD17 | M | | TSW | 05/92 ▸ 10/93 | 2141059Y01 | **731202** | 646 322 | ALB |
| **TERRANO (WD21) (87>93)** | | | | | | | | | | |
| 2.4 i WNLYFEQ ; WNLYJFE ; WNLYD/21 | E | 2389 | Z24I | M | | | 08/87 ▸ 02/93 | 2140015G01 | **731085** | 430 648 | CBS |
| 3.0 V6 WHYD21A | E | 2960 | VG30 | A | | | 01/90 ▸ 02/93 | 2146083G00 | | 430 647 | ALB |
| 2.7 TD WBLYF ; WBLYJFT WBLYD/21 | D | 2663 | TD27 | M | | | 08/87 ▸ 01/90 | 2140015G01 | **731085** | 430 648 | CBS |
| **TERRANO II (R20) (93>2001)** | | | | | | | | | | |
| 2.4 i KBFNL/QF/UF/VF ; TBFUL/QF/UF/VF | E | 2389 | KA24E-1 | M | | | 03/93 ▸ 06/96 | 214107F400 | | 502 564 | |
| 2.7 TD JVPNL/QF ; KVPNL/QF UF/VF ; TVPUL/QF/UF/VF | D | 2663 | TD27T | M | | | 03/93 ▸ 05/96 | 214100F121 | **732592** | 453 646 | ALB |
| 2.7 TD JVPNL/QF ; KVPNL/QF UF/VF ; TVPUL/QF/UF/VF | D | 2663 | TD27T | M | | | 05/96 ▸ 02/04 | 214107F000 | **731785** | 500 655 | ALB |
| 2.7 TDi | D | 2664 | TD27TI | M | | | 05/96 ▸ 02/04 | 214107F000 | **731785** | 500 655 | ALB |
| 2.7 TDi | D | 2664 | TD27TI | A | | | 07/98 ▸ 02/04 | 214107F000 | **731785** | 500 655 | ALB |
| **TERRANO III (2002>)** | | | | | | | | | | |
| 2.7 Di | D | 2664 | TD27TI | M | | | 02/04 ▸ 12/06 | 214107F000 | **731785** | 500 655 | ALB |
| 2.7 Di | D | 2664 | TD27TI | A | | | 02/04 ▸ 12/06 | 214107F000 | **731785** | 500 655 | ALB |
| **X-TRAIL (2001>2003)** | | | | | | | | | | |
| 2.0 i 16V | E | 1998 | QR20DE | M | | | 06/01 ▸ 09/03 | 214108H900 | **735063** | 450 686 | ALB |
| 2.0 i 16V | E | 1998 | QR20DE | A | | | 06/01 ▸ 09/03 | 214608H900 | **735064** | 450 686 | ALB |
| 2.2 Di | D | 2184 | YD22ETI-114 | M | | | 06/01 ▸ 09/03 | 214108H801 | **735062** | 450 686 | ALB |
| 2.2 Di | D | 2184 | YD22ETI-114 | M | | | 06/01 ▸ 09/03 | 214108H800 | **735081** | 450 686 | ALB |
| **X-TRAIL (2003>2007)** | | | | | | | | | | |
| 2.0 16V | E | 1998 | QR20DE | M | | | 09/03 ▸ 03/07 | 214108H900 | **735063** | 450 686 | ALB |
| 2.2 dCi 16V | D | 2184 | YD22DDTI | M | | | 09/03 ▸ 03/07 | 214108H800 | **735081** | 450 686 | ALB |
| **X-TRAIL (2007>)** | | | | | | | | | | |
| 2.0 16V | E | 1997 | MR20DE | M | | | 03/07 ▸ 07/10 | 21400JG300 | **735205** | 450 686 | ALB |
| 2.0 16V | E | 1997 | MR20DE | A | | | 03/07 ▸ 07/10 | 21400JG300 | **735205** | 450 686 | ALB |
| 2.5 16V | E | 2488 | QR25DE | M | | | 03/07 ▸ 07/10 | 21400JG300 | **735205** | 450 686 | ALB |
| 2.5 16V | E | 2488 | QR25DE | A | | | 03/07 ▸ 07/10 | 21400JG300 | **735205** | 450 686 | ALB |
| 2.0 dCi 16V | D | 1995 | M9R/F | M | | | 03/07 ▸ 07/10 | 21400JG700 | **735206** | 452 686 | ALB |
| 2.0 dCi 16V | D | 1995 | M9R/F | A | | | 03/07 ▸ 07/10 | 21400JG80A | **735206** | 452 686 | ALB |
| **NISSAN** | | | | | | | | | | |
| **D21 PICK-UP** | | | | | | | | | | |
| 2.0 FLGD21S ; KFLGD21 ; PLGD21H ; UFLGD21 FLD21/SR | E | 1952 | Z20 | M | | | 09/85 ▸ 08/86 | 2140001G00 | **731085** | 430 648 | CBS |
| 2.0 FLGD21S ; KFLGD21 ; PLGD21H ; UFLGD21 FLD21/SR/XR | E | 1952 | Z20 | M | | | 08/86 ▸ 10/93 | 2140015G01 | **731085** | 430 648 | CBS |
| 2.0 FLGD21S ; KFLGD21 ; PLGD21H ; UFLGD21 FLD21/SR/XR | E | 1952 | Z20 | M | | | 10/93 ▸ 05/94 | 2141073P00 | **731085** | 430 648 | CBS |
| 2.4 KNLMD21 ; NLD21R ; NLG21R ; NLMD21S NLYD21S ; UNLGD21 ; UNLMD21 ; KLNGD/21 | E | 2389 | Z24 | M | | | 09/85 ▸ 08/86 | 2140001G00 | **731085** | 430 648 | CBS |
| 2.4,2.4 i KNLMD21 ; NLD21R NLG21R ; NLMD21S ; UNLGD21 ; UNLMD21 KLNGD/21 | E | 2389 | Z24,Z24E | M | | | 08/86 ▸ 04/92 | 2140015G01 | **731085** | 430 648 | CBS |
| 2.4 NLD21KR | E | 2389 | Z24 | A | | | 09/85 ▸ 08/86 | 2140001G00 | **731085** | 430 648 | CBS |
| 2.4 KNLGD21 ; NLD21KR | E | 2389 | Z24 | A | | | 08/86 ▸ 04/92 | 2140015G01 | **731085** | 430 648 | CBS |
| 2.3 D ALD21/S ; KALGD21 ; UALGD21 ; ALGD2/1H/1S | D | 2289 | SD23 | M | | | 09/85 ▸ 10/87 | 2140080G00 | | | |
| 2.5 D JLMD21S ; KJLMD21 ; UJLGD21 ; UJLMD21 JLGD2/1H/1S | D | 2488 | SD25 | M | | | 09/85 ▸ 10/87 | 2140080G00 | | | |
| 2.5 D KRLGD21 ; KRLMD21 ; RLG ; RLGD21S ; RLMD21S URLMD21 ; KRL | D | 2494 | TD25-75,TD25-80 | M | | | 10/87 ▸ 10/93 | 2140080G00 | | | |
| **D22 PICK-UP** | | | | | | | | | | |
| 2.5 TD | D | 2494 | TD25TI | M | | | 05/98 ▸ | 214102S810 | **735350** | 686 450 | ALB |
| **INTERSTAR** | | | | | | | | | | |
| 1.9 dCi | D | 1870 | F9Q.7.72 | M | +/- | TSW | 09/02 ▸ 01/03 | 2140000QAJ | **732918** | 730 414,5 | ALM |
| 1.9 dCi | D | 1870 | F9Q.7.72 | M | +/- | TSW | 09/02 ▸ 01/03 | 2140000QAM | **732919** | 730 414,5 | ALB |
| 1.9 dCi | D | 1870 | F9Q.7.72 | M | + | TSW | 09/02 ▸ 01/03 | 2140000QAH | **732918** | 730 414,5 | ALM |
| 1.9 dCi | D | 1870 | F9Q.7.72 | M | + | TSW | 01/03 ▸ 11/03 | 2140000QAK | **732919** | 730 414,5 | ALB |

Radiator Radiateur Motorkühler Radiatore di raffreddamento Radiator Radyatör Radiator Радиатор vízhűtő Vodní chladič Radiator Ψυγείο



• **New** Nouveau **Nuevo** Novo **Nuovo** Nieuw **Neu** Nowość **Yeni** Новый Νέο **Nový**

| Type Ctr. | | CC | | AC | | | OE | Valeo | DIM. | TECH |
|---|---|---|---|---|---|---|---|---|---|---|
| **NISSAN (.../...)** | | | | | | | | | | |
| **INTERSTAR (.../...)** | | | | | | | | | | |
| 1.9 dCi | D | 1870 | F9Q.7.72 | M | | READ+ TSW | 09/02 ▸ 11/03 | 2141000QAA | **732917** | 730 414,5 ALM |
| 2.2 dCi | D | 2188 | G9T.7.22 | M | +/- | TSW | 09/02 ▸ 01/03 | 2140000QAM | **732919** | 730 414,5 ALB |
| 2.2 dCi | D | 2188 | G9T.7.22 | M | +/- | TSW | 09/02 ▸ 01/03 | 2140000QAJ | **732918** | 730 414,5 ALM |
| 2.2 dCi | D | 2188 | G9T.7.22 | M | + | TSW | 09/02 ▸ 01/03 | 2140000QAH | **732918** | 730 414,5 ALM |
| 2.2 dCi FDBNH5 | D | 2188 | G9T.7.22 | M | + | TSW | 01/03 ▸ 11/03 | 2140000QAK | **732919** | 730 414,5 ALB |
| 2.5 dCi FDAUD5 ; FDBUH5 FD0U | D | 2464 | G9U.7.20 | M | +/- | TSW | 09/02 ▸ 01/03 | 2140000QAM | **732919** | 730 414,5 ALB |
| 2.5 dCi FDAUD5 ; FDBUH5 FD0U | D | 2464 | G9U.7.20 | M | +/- | TSW | 09/02 ▸ 01/03 | 2140000QAJ | **732918** | 730 414,5 ALM |
| 2.5 dCi FDAUD5 ; FDBUH5 FD0U | D | 2464 | G9U.7.20 | M | + | TSW | 09/02 ▸ 01/03 | 2140000QAH | **732918** | 730 414,5 ALM |
| 2.5 dCi F3BVD5 ; F3BVE5 F3CVD5 ; F3CVE5 ; F3CVH5 ; F3CVJ5 ; F3CVL5 F3CVM5 ; FD0U ; FDAUD5 ; FDBUH5 ; F3AVD/5 | D | 2464 | G9U.7.20,G9U.7.50 | M | + | TSW | 01/03 ▸ 09/06 | 2140000QAK | **732919** | 730 414,5 ALB |
| 3.0 dCi F3CSE6 ; F3CSL6 F3CSM6 ; F3CSD/6 | D | 2953 | ZD3-136 | M | + | TSW | 01/04 ▸ 09/06 | 2140000QAK | **732919** | 730 414,5 ALB |
| **INTERSTAR II (2006>)** | | | | | | | | | | |
| 2.5 dCi F3A2D6 ; F3B2H6 | D | 2464 | G9U.6.30,G9U.7.20,G9U.7.50 | M | + | TSW | 09/06 ▸ | 2140000QAK | **732919** | 730 414,5 ALB |
| 2.5 dCi F3A2D6 ; F3B2H6 | D | 2464 | G9U.6.30,G9U.7.20,G9U.7.50 | M | | TSW | 09/06 ▸ | 2140000QAJ | **732918** | 730 414,5 ALM |
| **KUBISTAR** | | | | | | | | | | |
| 1.2 E,1.2 E 16V F10WAF ; FSNBLBR F10FA/F | E | 1149 | D4F.712,D7F.7.26,D7F.7.64 | M | | TSW | 09/03 ▸ | 2140000QAV | **732389** | 430 377,5 ALM |
| 1.2 E 16V | E | 1149 | D4F.712 | M | | | 09/03 ▸ | 2140000QAA | **732717** | 460 470 ALM |
| 1.2 E 16V | E | 1149 | D4F.712 | M | | TSW | 09/03 ▸ | 2140000QAX | **732621** Cesse | 480 414,5 ALM |
| 1.2 E 16V F10WAF | E | 1149 | D4F.712 | M | | TSW | 09/03 ▸ | 2140000QAZ | **731378** Cesse | 430 377,5 ALM |
| 1.2 E F10FAF ; FSNBLBR | E | 1149 | D7F.7.26,D7F.7.64 | M | | TSW | 09/03 ▸ 01/06 | 2140000QAY | **732523** | 480 414,5 ALM |
| 1.4 E | E | 1390 | K7J.7.00 | M | | | 09/03 ▸ 01/04 | 2140000QAA | **732717** | 460 470 ALM |
| 1.4 E | E | 1390 | K7J.7.00 | M | | TSW | 09/03 ▸ 01/04 | 2140000QAZ | **731378** | 430 377,5 ALM |
| 1.4 E | E | 1390 | K7J.7.01 | A | | | 09/03 ▸ 01/04 | 2140000QAA | **732717** | 460 470 ALM |
| 1.4 E | E | 1390 | K7J.7.01 | A | | TSW | 09/03 ▸ 01/04 | 2140000QAZ | **731378** | 430 377,5 ALM |
| 1.6 E 16V | E | 1598 | K4M.7.52 | M | | TSW | 01/04 ▸ | 2140000QAX | **732621** Cesse | 480 414,5 ALM |
| 1.6 E 16V | E | 1598 | K4M.7.52 | A | | TSW | 01/04 ▸ | 2140000QAX | **732621** Cesse | 480 414,5 ALM |
| 1.5 dCi,1.5 dCi 60 X76-F/SP/SQ/SR 1.5 dCi 70,1.5 dCi 85 | D | 1461 | K9K.7,K9K.7.02,K9K.7.10 K9K.7.16,K9K.7.18 | M | | | 09/03 ▸ | 2140000QAA | **732717** | 460 470 ALM |
| 1.5 dCi,1.5 dCi 60 X76-F/SP/SQ/SR 1.5 dCi 70,1.5 dCi 85 | D | 1461 | K9K.7,K9K.7.02,K9K.7.10 K9K.7.16,K9K.7.18 | M | | TSW | 09/03 ▸ | 2140000QAZ | **731378** Cesse | 430 377,5 ALM |
| 1.5 dCi | D | 1461 | K9K.7,K9K.7.02 | M | | TSW | 09/03 ▸ 04/06 | 2140000QAX | **732621** | 480 414,5 ALM |
| 1.5 dCi | D | 1461 | K9K.7,K9K.7.02 | M | | TSW | 09/03 ▸ 04/06 | 2140000QAV | **732389** | 430 377,5 ALM |
| **PRIMASTAR (2002>2006)** | | | | | | | | | | |
| 2.0 i | E | 1998 | F4R.7.20 | M | + | | 09/02 ▸ 09/06 | 2140000QAN | **732853** | 561 470 ALM |
| 1.9 dCi | D | 1870 | F9Q.7.60 | M | + | | 09/02 ▸ 09/06 | 2140000QAN | **732853** | 561 470 ALM |
| 1.9 dCi | D | 1870 | F9Q.7.60 | M | - | | 09/02 ▸ 09/06 | 2140000QAS | **732846** | 560 469 ALB |
| 2.5 dCi | D | 2464 | G9U.7.30 | M | + | | 09/02 ▸ 09/06 | 2140000QAN | **732853** | 561 470 ALM |
| 2.5 dCi | D | 2464 | G9U.7.30 | M | - | | 09/02 ▸ 09/06 | 2140000QAS | **732846** | 560 469 ALB |
| 2.5 dCi | D | 2464 | G9U.7.30 | M | - | | 09/02 ▸ 09/06 | 2140000QAT | **732902** | 781,4 470 ALM |
| **PRIMASTAR (2006>)** | | | | | | | | | | |
| 2.5 dCi X83-BTT ; X83-CTT X83-DTT ; X83-ETT ; X83-GTT ; X83-JTT X83-NTT ; X83-A/TT | D | 2464 | G9U.6.30 | M | | | 09/06 ▸ | 2140000QAT | **732902** | 781,4 470 ALM |
| **VANETTE CARGO (C23M) (95>)** | | | | | | | | | | |
| 1.6 i MAYVLDF | E | 1597 | GA16DEE | M | - | | 07/92 ▸ 12/97 | 214109C001 | **732484** | 423 685 CBS |
| 1.6 i MAYVLDF | E | 1597 | GA16DEE | M | - | | 12/97 ▸ 11/01 | 214107C002 | **734446** | 420 684 ALB |
| 2.0 D MVEVLDF | D | 1952 | LD20 | M | - | | 07/92 ▸ 08/94 | 214109C002 | **734671** | 423 685 ALB |
| 2.0 D MVEVLDF | D | 1952 | LD20 | M | | | 07/92 ▸ 08/94 | 214109C101 | **732484** | 423 685 CBS |
| 2.0 D MVEVLDF | D | 1952 | LD20 | M | | | 07/92 ▸ 08/94 | 214109C002 | **734671** | 423 685 ALB |
| 2.3 D MAVFLDF ; MVFVLDF | D | 2283 | LD23 | M | - | | 09/94 ▸ 06/96 | 214109C602 | **734446** | 420 684 ALB |
| 2.3 D MAVFLDF ; MVFVLDF | D | 2283 | LD23 | M | - | | 06/96 ▸ 11/01 | 214107C002 | **734446** | 420 684 ALB |
| **OPEL** | | | | | | | | | | |
| **AGILA (2000>2007)** | | | | | | | | | | |
| 1.0 i 12V | E | 973 | Z10XE | M | +/- | | 03/00 ▸ 07/03 | 1300220 | **732694** | 375 377,5 ALB |
| 1.0 i 12V | E | 973 | Z10XE | M | +/- | | 01/02 ▸ 07/03 | 4707764 | **734331** | 375 377,5 ALB |

# OPEL (.../...)

## AGILA (2000>2007) (.../...)

| | | CC | | | AC | | | OE | Valeo | DIM. | TECH |
|---|---|---|---|---|---|---|---|---|---|---|---|
| 1.0 i Twinport 12V HF68CG | E | 998 | Z10XEP | M | | | 08/03 ▸ 12/07 | 1300220 | **732694** | 375 377,5 | ALB |
| 1.0 i Twinport 12V HF68CG<br>5G00001 ▸ | E | 998 | Z10XEP | M | | | 2005 ▸ 12/07 | 4707764 | **734331** | 375 377,5 | ALB |
| 1.2 i 16V HL68EG | E | 1199 | Z12XE | M | +/- | | 03/00 ▸ 08/04 | 1300220 | **732694** | 375 377,5 | ALB |
| 1.2 i 16V HL68EG | E | 1199 | Z12XE | M | +/- | | 01/02 ▸ 08/04 | 4707764 | **734331** | 375 377,5 | ALB |
| 1.2 i Twinport 16V | E | 1229 | Z12XEP | M | | | 2005 ▸ 12/07 | 4707764 | **734331** | 375 377,5 | ALB |

## AGILA (2007>)

| | | | | | | | | | | | |
|---|---|---|---|---|---|---|---|---|---|---|---|
| 1.0 i 12V | E | 997 | K10B | M | +/- | | 12/07 ▸ | 4709362 | •**735383** | 375 479 | ALB |
| 1.2 i 16V | E | 1242 | K12B | M | +/- | | 12/07 ▸ | 4709362 | •**735383** | 375 479 | ALB |

## ASCONA B (75>81)

| | | | | | | | | | | | |
|---|---|---|---|---|---|---|---|---|---|---|---|
| 1.2 | E | 1196 | 12N,12S | M | - | | 08/75 ▸ 07/79 | 1302095 | | 325 383 | CBS |
| 1.3,1.3 S | E | 1297 | 13N,13S | M | - | | 03/79 ▸ 07/81 | 1302164 | | 325 383 | CBS |
| 1.6,1.6 S | E | 1584 | 16N,16S-CVH | A | - | | 08/75 ▸ 07/81 | 1302119 | | 354 452,5 | CBS |
| 1.9 | E | 1897 | 19N | M | - | | 08/75 ▸ 07/81 | 1302121 | | 354 452,5 | CBS |
| 2.0,2.0 E<br>C6067586 ▸ | E | 1979 | 20E,20S | M | - | | 08/78 ▸ 07/81 | 1302012 | | 354 452,5 | CBS |
| 2.0,2.0 E | E | 1979 | 20E,20S | M | - | | 08/78 ▸ | 1302121 | | 354 452,5 | CBS |

## ASCONA C (81>88)

| | | | | | | | | | | | |
|---|---|---|---|---|---|---|---|---|---|---|---|
| 1300,1300 S J94/11/68/69 ; J98<br>11/68/69 ; JC9/481/484/486/487/488/489/588<br>881/884/886/887/889/8A8<br>H1015205, H6019509 ▸ | E | 1297 | 13N,13S | M | - | TSW | 08/81 ▸ 08/88 | 1302189 | **883751** | 530 285 | ALM |
| 1300,1300 S J94/11/68/69 ; J98<br>11/68/69 ; JC9/481/484/486/487/488/489/588<br>881/884/886/887/889/8A8 | E | 1297 | 13N,13S | M | - | TSW | 08/81 ▸ 08/88 | 1302181 | **883751** | 530 285 | ALM |
| 1300 S J94/11/68/69 ; J98<br>11/68/69 ; JC9/481/484/486/487/489/8A8<br>H6019509, H1015205 ▸ | E | 1297 | 13S | M | | TSW | 08/83 ▸ 08/88 | 1302189 | **883751** | 530 285 | ALM |
| 1300,1300 S J95/11/68/69 ; JC9<br>581/584/586/587/589 | E | 1297 | 13N,13S | A | - | TSW | 07/82 ▸ 08/88 | 1302189 | **883751** | 530 285 | ALM |
| 1300,1300 S J94/11/68/69 ; J98<br>11/68/69 ; JC9/481/484/486/487/488/489/588<br>881/886/887/889/8A8<br>▸ C5999999 | E | 1297 | 13N,13S | M | - | | 08/81 ▸ | 1302199 | | 420 285 | ALM |
| 1300,1300 S J95/11/68/69 ; JC9<br>581/584/586/587/589<br>▸ C5999999, C1999999 | E | 1297 | 13N,13S | A | - | | 08/81 ▸ | 1302194 | | 530 414 | ALM |
| 1300,1300 S J94/11/68/69 ; J98<br>11/68/69 ; JC9/481/484/486/487/488/489/588<br>881/884/886/887/889/8A8<br>▸ H1015204, H6019508 | E | 1297 | 13N,13S | M | - | | 08/81 ▸ | 1302192 | | 530 414 | ALM |
| 1300,1300 S J94/11/68/69 ; J98<br>11/68/69 ; JC9/481/484/486/487/488/489/588<br>881/884/886/887/889/8A8<br>▸ H1015204, H6019508 | E | 1297 | 13N,13S | M | - | | 08/81 ▸ | 1302187 | | 530 414 | ALM |
| 1300,1300 S J94/11/68/69 ; J98<br>11/68/69 ; JC9/481/484/486/487/488/489/588<br>881/884/886/887/889/8A8<br>▸ H6019508, H1015204 | E | 1297 | 13N,13S | M | | TSW | 08/81 ▸ | 1300205 | **732607** | 680 285 | ALM |
| 1300 S J94/11 ; J98/11/68<br>JC9/481/486/487/8A8<br>▸ H6019508, H1015204 | E | 1297 | 13S | M | | | 08/83 ▸ | 1302187 | | 530 414 | ALM |
| 1600 JC | E | 1584 | 16N | M | - | | 08/81 ▸ 08/83 | 1302187 | | 530 414 | ALM |
| 1600 JC | E | 1584 | 16N | M | - | | 08/81 ▸ 08/83 | 1302192 | | 530 414 | ALM |
| 1600 JC | E | 1584 | 16N | M | | TSW | 08/81 ▸ 08/83 | 1300205 | **732607** | 680 285 | ALM |
| 1600,1600 S JC/ ; JC4/381/384<br>386/481/484/486/487/488/4A8/4AR/8A8<br>JCU467 ; JCC/438/488 ; JU4/11/68/69/GT1/GT8<br>GT9 ; JU8/11/68/69 | E | 1598 | 16SH,C16NZ | M | - | | 08/81 ▸ 08/88 | 1302187 | | 530 414 | ALM |
| 1600 JC | E | 1598 | C16NZ | M | - | TSW | 08/86 ▸ 08/88 | 1300205 | **732607** | 680 285 | ALM |
| 1600 S,1600 i JC ; JC4484 | E | 1598 | 16SH,E16NZ | M | | | 08/81 ▸ 08/88 | 1302192 | | 530 414 | ALM |
| 1600,1600 S,1600 i JC/ ; JC4/381/384<br>386/481/484/486/487/488/4A8/4AR/8A8<br>JCU467 ; JCC/438/488 ; JU4/11/68/69/GT1/GT8<br>GT9 ; JU8/11/68/69 | E | 1598 | 16SH,E16NZ | M | | TSW | 08/81 ▸ 08/88 | 1300205 | **732607** | 680 285 | ALM |
| 1600 i JC | E | 1598 | E16NZ | M | | | 09/87 ▸ 08/88 | 1302187 | | 530 414 | ALM |

Radiator Radiateur Motorkühler Radiatore di raffreddamento Radiator Radyatör Radiador Радиатор vízhűtő Vodní chladič Radiator Ψυγείο



• **New** Nouveau **Nuevo** Novo **Nuovo** Nieuw **Neu** Nowość **Yeni** Новый Νέο **Nový**

# OPEL (.../...)

## ASCONA C (81>88) (.../...)

| | | CC | | | AC | | | OE | Valeo | DIM. | TECH |
|---|---|---|---|---|---|---|---|---|---|---|---|
| 1600,1600 S JCC458 ; JCU567 JC4/581/584/586/587/588/589/5R8 ; JU5/11/68 69/GT1/GT8/GT9 | E | 1598 | 16SH | A | - | | 08/81 ▸ 08/88 | 1302194 | | 530 414 | ALM |
| 1600 i JC | E | 1598 | E16NZ | A | | TSW | 09/87 ▸ 08/88 | 1300205 | 732607 | 680 285 | ALM |
| 1600 i JC | E | 1598 | E16NZ | A | | | 09/87 ▸ 08/88 | 1302192 | | 530 414 | ALM |
| 1600 i JC | E | 1598 | E16NZ | A | | | 09/87 ▸ 08/88 | 1302187 | | 530 414 | ALM |
| 1800 E,1800 i JCCW38 ; JC/ ; JCW/3 381/384/386/4A8/4AC/4C8 | E | 1796 | 18E,C18NE,E18NV,S18NV | M | - | | 08/82 ▸ 08/88 | 1302187 | | 530 414 | ALM |
| 1800 E,1800 i JCCW38 ; JC/ ; JCW/3 381/384/386/4A8/4AC/4C8 | E | 1796 | 18E,C18NE,E18NV,S18NV | M | - | | 08/82 ▸ 08/88 | 1302192 | | 530 414 | ALM |
| 1800 E,1800 i JCCW38 ; JC/ ; JCW/3 381/384/386/4A8/4AC/4C8 | E | 1796 | 18E,C18NE,E18NV,S18NV | M | | TSW | 08/82 ▸ 08/88 | 1300205 | 732607 | 680 285 | ALM |
| 1800 E,1800 i JCW/581/587/588/589 5C8/5R8 | E | 1796 | 18E | A | - | | 08/81 ▸ 08/86 | 1302194 | | 530 414 | ALM |
| 2000 i JB3/GT1/GT8/GT9 JCB367 ; JCK367 ; JB4/68/69 ; JK3/GT1/GT8 GT9 | E | 1998 | 20NE,20SEH | M | - | TSW | 08/85 ▸ 08/88 | 1302015 | 883771 | 530 285 | ALM |
| 2000 i JB3/GT1/GT8/GT9 JCB367 ; JCK367 ; JB4/68/69 ; JK3/GT1/GT8 GT9 | E | 1998 | 20NE,20SEH | M | - | TSW | 08/85 ▸ 08/88 | 1300016 | 883920 | 530 229 | ALM |
| 2000 i JCB567 ; JB5/68/69 GT1/GT8/GT9 | E | 1998 | 20NE,20SEH | A | - | | 08/85 ▸ 08/88 | 1300114 | | 525 310 | |
| 1600 D JCT/484/486/489/4A8 881/884/886/887/889 ; JT4/11/68/69 ; JT8/11 68/69 | D | 1598 | 1600D | M | - | | 08/81 ▸ 08/88 | 1302006 | | 530 414 | ALM |

## ASTRA F (91>98)

| | | CC | | | AC | | | OE | Valeo | DIM. | TECH |
|---|---|---|---|---|---|---|---|---|---|---|---|
| 1.4,1.4 i,1.4 i 16V TA1/308/319/368 TA3/240/246 ; TA4/306/308/319/368/408/419 435/468 ; TAC/408/419/468 ; TAK/136/436 | E | 1389 | 14NV,14SE,C14NZ,C14SE,X14NZ X14XE | M | + | DA+, TSW | 09/91 ▸ 02/01 | 1300148 | 734429 | 590 365 | ALB |
| 1.4,1.4 i TA3/240/246 ; TA4 306/308/319/368/408/419/435/468 ; TAK436 TAC/408/419/468 P27268892, P2768892 ▸ | E | 1389 | 14NV,14SE,C14NZ,C14SE,X14NZ | M | - | TSW | 06/93 ▸ 02/01 | 1300154 | 730975 | 525 322 | ALM |
| 1.4, 1.4 i TAK436 | E | 1389 | 14NV, C14SE | M | - | TSW | 09/91 ▸ 01/98 | 1300140 | 730975 | 525 322 | ALM |
| 1.4 i 16V TAK136 ; TA1/308/319 368 | E | 1389 | X14XE | M | - | TSW | 07/95 ▸ 02/01 | 1300132 | 730994 | 540 377,5 | ALM |
| 1.4 i 16V TA1/308/319/368 | E | 1389 | X14XE | M | | TSW | 07/95 ▸ 01/98 | | 731551 | 540 377,5 | ALM |
| 1.4 i,1.4 i 16V TA6/308/319/368 | E | 1389 | 14SE,C14SE,X14XE | A | + | DA+, TSW | 09/91 ▸ 02/01 | 1300148 | 734429 | 590 365 | ALB |
| 1.4 i 16V | E | 1389 | X14XE | A | - | TSW | 07/95 ▸ 02/01 | 1300132 | 730994 | 540 377,5 | ALM |
| 1.4,1.4 i TA4/306/308/319/368 408/419/435/468 ; TAK436 ; TAC/408/419/468 NA0001, NA00001 ▸ NA003552, NE127462 | E | 1389 | 14NV,14SE,C14NZ,C14SE | M | - | | > ▸ | 1300114 | | 525 310 | |
| 1.4,1.4 i TA4/306/308/319/368 408/419/435/468 ; TAK436 ; TAC/408/419/468 NA003553, NE127463 ▸ P8212506, P2768891 | E | 1389 | 14NV,14SE,C14NZ,C14SE | M | - | TSW | 03/92 ▸ | 1300112 | 730975 | 525 322 | ALM |
| 1.6 i,1.6 i 16V TAM/301/306/308/319 368 ; TAN/408/419/468 | E | 1598 | 16LZ2,C16NZ,C16SE,X16SZ X16SZR,X16XEL | M | + | DA+, TSW | 09/91 ▸ 02/01 | 1300148 | 734429 | 590 365 | ALB |
| 1.6 i,1.6 i 16V TAM/301/306/308/319 368 | E | 1598 | 16LZ2,X16XEL | M | - | TSW | 09/91 ▸ 02/01 | 1300132 | 730994 | 540 377,5 | ALM |
| 1.6 i,1.6 i 16V | E | 1598 | 16LZ2,X16XEL | M | - | DA+, TSW | 09/93 ▸ 01/98 | 1300148 | 734429 | 590 365 | ALB |
| 1.6 i | E | 1598 | X16SZ | M | | TSW | 06/93 ▸ 06/95 | 1300112 | 730975 | 525 322 | ALM |
| 1.6 i 16V TAM/301/306/308/319 368 | E | 1598 | X16XEL | M | | TSW | 07/94 ▸ 01/98 | | 731551 | 540 377,5 | ALM |
| 1.6 i,1.6 i 16V TAM/608/619/668 TAN/608/619/668 | E | 1598 | C16NZ,C16SE,X16SZ,X16SZR X16XEL | A | + | DA+, TSW | 09/91 ▸ 02/01 | 1300148 | 734429 | 590 365 | ALB |
| 1.6 i N5000001 ▸ | E | 1598 | X16SZ,X16SZR | A | - | | > ▸ 02/01 | 1300114 | | 525 310 | |
| 1.6 i 16V TAM/608/619/668 | E | 1598 | X16XEL | A | - | TSW | 06/94 ▸ 02/01 | 1300132 | 730994 | 540 377,5 | ALM |
| 1.6 i | E | 1598 | X16SZ | A | | TSW | 06/93 ▸ 06/95 | 1300112 | 730975 | 525 322 | ALM |
| 1.6 i TAN/408/419/468 NA000001, N5000001 ▸ NA003552, N4145017 | E | 1598 | C16NZ,C16SE,X16SZ,X16SZR | M | - | | > ▸ | 1300114 | | 525 310 | |
| 1.8 i | E | 1796 | C18NZ | M | + | DA+, TSW | 09/91 ▸ 08/94 | 1300148 | 734429 | 590 365 | ALB |
| 1.8 i | E | 1796 | C18NZ | M | - | TSW | 09/91 ▸ 08/94 | 1300132 | 730994 | 540 377,5 | ALM |
| 1.8 i | E | 1796 | C18NZ | M | | TSW | 09/91 ▸ 01/98 | | 731551 | 540 377,5 | ALM |
| 1.8 i | E | 1796 | C18NZ | A | + | DA+, TSW | 09/91 ▸ 08/94 | 1300148 | 734429 | 590 365 | ALB |
| 1.8 i | E | 1796 | C18NZ | A | - | TSW | 09/91 ▸ 08/94 | 1300132 | 730994 | 540 377,5 | ALM |
| 1.8 i 16V TAKU46 | E | 1799 | C18XE,C18XEL,X18XE | M | + | DA+, TSW | 07/93 ▸ 02/01 | 1300148 | 734429 | 590 365 | ALB |
| 1.8 i 16V | E | 1799 | C18XE,C18XEL,X18XE | M | - | TSW | 07/93 ▸ 02/01 | 1300132 | 730994 | 540 377,5 | ALM |
| 1.8 i 16V | E | 1799 | C18XE,C18XEL | M | | TSW | 07/93 ▸ 01/98 | | 731551 | 540 377,5 | ALM |

# OPEL (.../...)

## ASTRA F (91>98) (.../...)

| | | CC | | AC | | | OE | Valeo | DIM. | TECH |
|---|---|---|---|---|---|---|---|---|---|---|
| 1.8 i 16V | E | 1799 | X18XE | M | | DA+, TSW | 07/95 ▸ 01/98 | 1300148 | 734429 | 590 365 | ALB |
| 1.8 i 16V | E | 1799 | X18XE | A | + | DA+, TSW | 08/94 ▸ 02/01 | 1300148 | 734429 | 590 365 | ALB |
| 1.8 i 16V | E | 1799 | X18XE | A | - | TSW | 08/94 ▸ 02/01 | 1300132 | 730994 | 540 377,5 | ALM |
| 2.0 i,2.0 i 16V TAD/3G0 ; TAKD46 TAJ/3G0/3G1/3G6 ; TAW/300/401/406 | E | 1998 | C20NE,C20XE,X20XEV | M | + | DA+, TSW | 09/91 ▸ 02/01 | 1300148 | 734429 | 590 365 | ALB |
| 2.0 i,2.0 i 16V TAD/3G0 ; TAKD46 TAJ/3G0/3G1/3G6 ; TAW/300/401/406 | E | 1998 | C20NE,C20XE,X20XEV | M | - | TSW | 09/91 ▸ 02/01 | 1300132 | 730994 | 540 377,5 | ALM |
| 2.0 i,2.0 i 16V TAD/3G0 ; TAJ/3G0 3G1/3G6 ; TAW/401/406 | E | 1998 | C20NE,C20XE,X20XEV | M | | TSW | 09/91 ▸ 01/98 | | 731551 | 540 377,5 | ALM |
| 2.0 i,2.0 i 16V TAW/600/601/606 | E | 1998 | C20NE,X20XEV | A | + | DA+, TSW | 09/91 ▸ 02/01 | 1300148 | 734429 | 590 365 | ALB |
| 2.0 i 16V TAW/600/601/606 | E | 1998 | X20XEV | A | - | TSW | 07/94 ▸ 01/98 | 1300132 | 730994 | 540 377,5 | ALM |
| 1.7 TD Turbo TA9/419/468/4E0/4E1 4E6 | D | 1686 | 17TD | M | + | DA+, TSW | 09/91 ▸ 01/98 | 1300148 | 734429 | 590 365 | ALB |
| 1.7 TD Turbo ▸ v2127271 | D | 1686 | 17TD | M | | TSW 820037 | 09/91 ▸ | 1300103 | 731022 | 540 377,5 | ALM |
| 1.7 TD Turbo TA9/419/468/4E0/4E1 4E6 ▸ V8059680, V2127271 | D | 1686 | 17TD | M | - | TSW 820037 | 09/91 ▸ | 1300103 | 731022 | 540 377,5 | ALM |
| 1.7 D,1.7 TD TAA/408/419/468 1.7 TD Ecoturbo TAF/408/419/435/468 | D | 1699 | 17D,17DR,X17DTL | M | + | DA+, TSW | 09/91 ▸ 01/98 | 1300148 | 734429 | 590 365 | ALB |
| 1.7 D,1.7 TD TAF/408/419/435/468 | D | 1699 | 17D,17DR,X17DTL | M | - | TSW | 09/91 ▸ 01/98 | 1300134 | 730993 | 540 377,5 | ALM |
| 1.7 TD,1.7 TD Ecoturbo TAA/408/419/468 | D | 1699 | X17DTL | M | | TSW | 07/94 ▸ 01/98 | 6302011 | 731421 | 502 348 | ALB |
| 1.7 TD | D | 1699 | X17DTL | M | | TSW 820037 | 07/94 ▸ | 1300103 | 731022 | 540 377,5 | ALM |

## ASTRA G (98>2005)

| | | CC | | AC | | | OE | Valeo | DIM. | TECH |
|---|---|---|---|---|---|---|---|---|---|---|
| 1.6 i GNV | G | 1598 | Z16YNG | M | + | | 03/03 ▸ 02/04 | 1300257 | 732549 | 610 377,5 | ALM |
| 1.6 i GNV | G | 1598 | Z16YNG | M | | | 03/03 ▸ 02/04 | 1300213 | 732724 | 540 377,5 | ALM |
| 1.2 i 16V | E | 1199 | X12XE,Z12XE | M | + | | 02/98 ▸ | 1300212 | 732551 | 610 377,5 | ALM |
| 1.2 i 16V | E | 1199 | X12XE | M | - | | 02/98 ▸ 02/04 | 1300211 | 732723 | 540 377,5 | ALM |
| 1.2 i 16V | E | 1199 | X12XE,Z12XE | M | | | 09/98 ▸ 09/04 | 1300211 | 732723 | 540 377,5 | ALM |
| 1.2 i 16V ▸ Y2302987 | E | 1199 | X12XE | M | | | 02/98 ▸ 2000 | 1300186 | 732723 | 540 377,5 | ALM |
| 1.2 i 16V ▸ Y8144150, Y6129876 | E | 1199 | X12XE | M | - | | 02/98 ▸ 2000 | 1300186 | 732723 | 540 377,5 | ALM |
| 1.4 i 16V | E | 1389 | X14XE,Z14XE | M | + | | 02/98 ▸ 02/04 | 1300257 | 732549 | 610 377,5 | ALM |
| 1.4 i 16V Y5291301, Y8144151 ▸ | E | 1389 | X14XE | M | + | | 2000 ▸ 02/04 | 93277988 | 732795 | 540 377,5 | ALM |
| 1.4 i 16V Y6129877, Y2279350 ▸ | E | 1389 | X14XE | M | + | | 2000 ▸ | | 732729 | 610 377,5 | ALM |
| 1.4 i 16V | E | 1389 | X14XE | M | - | | 02/98 ▸ 02/04 | 90570725 | 732724 | 540 377,5 | ALM |
| 1.4 i 16V | E | 1389 | X14XE,Z14XE | M | | | 02/98 ▸ 02/04 | 1300213 | 732724 | 540 377,5 | ALM |
| 1.4 i 16V | E | 1389 | X14XE,Z14XE | A | +/- | | 02/98 ▸ 02/04 | 90570725 | 732724 | 540 377,5 | ALM |
| 1.4 i 16V | E | 1389 | X14XE,Z14XE | A | + | | 02/98 ▸ 02/04 | 1300257 | 732549 | 610 377,5 | ALM |
| 1.4 i 16V | E | 1389 | X14XE,Z14XE | A | - | | 02/98 ▸ 02/04 | 1300213 | 732724 | 540 377,5 | ALM |
| 1.4 i 16V ▸ Y2284093, Y8144150 | E | 1389 | X14XE | M | | | 02/98 ▸ | 1300214 | 732549 | 610 377,5 | ALM |
| 1.4 i 16V ▸ Y5291300, Y6132349 | E | 1389 | X14XE | M | - | | 02/98 ▸ 2000 | 1300187 | 732724 | 540 377,5 | ALM |
| 1.4 i 16V ▸ Y5291300, Y8144150 | E | 1389 | X14XE | A | | | 02/98 ▸ | 1300214 | 732549 | 610 377,5 | ALM |
| 1.4 i 16V ▸ Y5291300, Y8144150 | E | 1389 | X14XE | A | + | | 02/98 ▸ 2000 | 1300196 | 732549 | 610 377,5 | ALM |
| 1.4 i 16V ▸ Y6129876, Y5291300 | E | 1389 | X14XE | M | + | | 02/98 ▸ 2000 | 1300196 | 732549 | 610 377,5 | ALM |
| 1.4 i 16V ▸ Y6129876, Y8144150 | E | 1389 | X14XE | M | + | | 02/98 ▸ | 1300214 | 732549 | 610 377,5 | ALM |
| 1.4 i 16V ▸ Y6132349, Y8144150 | E | 1389 | X14XE | A | - | | 02/98 ▸ 2000 | 1300187 | 732724 | 540 377,5 | ALM |
| 1.4 i 16V Y2281475, Y6129877 ▸ Y8144150, Y6129876 | E | 1389 | X14XE | A | + | | 02/98 ▸ | 1300214 | 732549 | 610 377,5 | ALM |
| 1.6 i,1.6 i 16V | E | 1598 | X16SZR,X16XEL,Z16SE/E2,Z16SE/E4,Z16XE Z16XEP | M | + | | 02/98 ▸ 12/05 | 1300257 | 732549 | 610 377,5 | ALM |
| 1.6 i,1.6 i 16V | E | 1598 | X16SZR,X16XEL | M | + | | 02/98 ▸ 02/04 | 1300189 | 732729 | 610 377,5 | ALM |
| 1.6 i,1.6 i 16V Y2279350, Y8144151 ▸ | E | 1598 | X16SZR,X16XEL | M | + | | 2000 ▸ | | 732729 | 610 377,5 | ALM |
| 1.6 i,1.6 i 16V Y6129877, Y5291301 ▸ | E | 1598 | X16SZR,X16XEL | M | + | | 2000 ▸ 02/04 | 90570725 | 732724 | 540 377,5 | ALM |
| 1.6 i,1.6 i 16V Y8144151, Y2279350 ▸ | E | 1598 | X16SZR,X16XEL | M | + | | 2000 ▸ 02/04 | 93277988 | 732795 | 540 377,5 | ALM |
| 1.6 i 16V | E | 1598 | X16XEL | M | - | | 02/98 ▸ 02/04 | 90570725 | 732724 | 540 377,5 | ALM |

Radiator Ψυγείο Vodní chladič Радиатор vízhűtő Radiador Radiator Radyatör Radiator Radiatore di raffreddamento Motorkühler Radiateur Radiator



• **New** Nouveau **Nuevo** Novo **Nuovo** Nieuw **Neu** Nowość **Yeni** Новый Νέο **Nový**

# OPEL (.../...)

## ASTRA G (98>2005) (.../...)

| | | CC | | AC | | | OE | Valeo | DIM. | TECH |
|---|---|---|---|---|---|---|---|---|---|---|
| 1.6 i,1.6 i 16V | E | 1598 | X16SZR,X16XEL,Z16SE/E2,Z16SE/E4,Z16XE | M | | | 02/98 ▸ 12/05 | 1300213 | 732724 | 540 377,5 | ALM |
| 1.6 i,1.6 i 16V | E | 1598 | X16SZR,X16XEL,Z16SE/E4,Z16XE,Z16XEP | A | +/- | | 02/98 ▸ 02/04 | 90570725 | 732724 | 540 377,5 | ALM |
| 1.6 i,1.6 i 16V | E | 1598 | X16SZR,X16XEL,Z16SE/E4,Z16XE,Z16XEP | A | + | | 02/98 ▸ 02/04 | 1300257 | 732549 | 610 377,5 | ALM |
| 1.6 i,1.6 i 16V | E | 1598 | X16SZR,X16XEL,Z16SE/E4,Z16XE,Z16XEP | A | - | | 02/98 ▸ 02/04 | 1300213 | 732724 | 540 377,5 | ALM |
| 1.6 i,1.6 i 16V<br>▸ Y2279349, Y6129876 | E | 1598 | X16SZR,X16XEL | M | + | | 02/98 ▸ 2000 | 1300214 | 732549 | 610 377,5 | ALM |
| 1.6 i,1.6 i 16V<br>▸ Y2281474, Y5291300 | E | 1598 | X16SZR,X16XEL | A | + | | 02/98 ▸ 2000 | 1300196 | 732549 | 610 377,5 | ALM |
| 1.6 i,1.6 i 16V<br>▸ Y2284093, Y5291300 | E | 1598 | X16SZR,X16XEL | M | - | | 02/98 ▸ 2000 | 1300187 | 732724 | 540 377,5 | ALM |
| 1.6 i,1.6 i 16V<br>▸ Y2284093, Y5291300 | E | 1598 | X16SZR,X16XEL | M | | | 02/98 ▸ | 1300214 | 732549 | 610 377,5 | ALM |
| 1.6 i,1.6 i 16V<br>Y2281475, Y6129877 ▸ Y5291300, Y8144150 | E | 1598 | X16SZR,X16XEL | A | + | | 02/98 ▸ | 1300214 | 732549 | 610 377,5 | ALM |
| 1.6 i,1.6 i 16V<br>▸ Y6129876, Y2279349 | E | 1598 | X16SZR,X16XEL | M | + | | 02/98 ▸ 2000 | 1300196 | 732549 | 610 377,5 | ALM |
| 1.6 i,1.6 i 16V<br>▸ Y6132349, Y5291300 | E | 1598 | X16SZR,X16XEL | A | - | | 02/98 ▸ 2000 | 1300187 | 732724 | 540 377,5 | ALM |
| 1.6 i,1.6 i 16V<br>▸ Y6132349, Y5291300 | E | 1598 | X16SZR,X16XEL | A | | | 02/98 ▸ | 1300214 | 732549 | 610 377,5 | ALM |
| 1.8 i 16V | E | 1796 | X18XE1 | M | + | | 02/98 ▸ 08/00 | 1300189 | 732729 | 610 377,5 | ALM |
| 1.8 i 16V | E | 1796 | X18XE1,Z18XE,Z18XEL | M | + | | 02/98 ▸ 12/05 | 1300257 | 732549 | 610 377,5 | ALM |
| 1.8 i 16V 0BP07K<br>Y5291301, Y2279350 ▸ | E | 1796 | X18XE1,Z18XEL | M | + | | 02/00 ▸ 02/05 | 93277988 | 732795 | 540 377,5 | ALM |
| 1.8 i 16V<br>Y8144151, Y2279350 ▸ | E | 1796 | X18XE1,Z18XEL | M | + | | 02/00 ▸ 02/05 | 90570725 | 732724 | 540 377,5 | ALM |
| 1.8 i 16V 0BP07K<br>Y6129877, Y2279350 ▸ | E | 1796 | X18XE1,Z18XEL | M | + | | 02/00 ▸ | | 732729 | 610 377,5 | ALM |
| 1.8 i 16V | E | 1796 | X18XE1 | M | - | | 02/98 ▸ 08/00 | 90570725 | 732724 | 540 377,5 | ALM |
| 1.8 i 16V | E | 1796 | X18XE1,Z18XE,Z18XEL | M | | | 02/98 ▸ 12/05 | 1300213 | 732724 | 540 377,5 | ALM |
| 1.8 i 16V | E | 1796 | X18XE1,Z18XE | A | +/- | | 02/98 ▸ 02/04 | 90570725 | 732724 | 540 377,5 | ALM |
| 1.8 i 16V | E | 1796 | X18XE1,Z18XE | A | + | | 02/98 ▸ 02/04 | 1300257 | 732549 | 610 377,5 | ALM |
| 1.8 i 16V | E | 1796 | X18XE1,Z18XE | A | - | | 02/98 ▸ 02/04 | 1300213 | 732724 | 540 377,5 | ALM |
| 1.8 i 16V<br>Y6129877, Y2281475 ▸ Y2281474, Y5291300 | E | 1796 | X18XE1 | A | + | | 02/98 ▸ | 1300214 | 732549 | 610 377,5 | ALM |
| 1.8 i 16V<br>▸ Y5291300, Y2279349 | E | 1796 | X18XE1 | M | + | | 02/98 ▸ 2000 | 1300196 | 732549 | 610 377,5 | ALM |
| 1.8 i 16V<br>▸ Y5291300, Y2284093 | E | 1796 | X18XE1 | M | | | 02/98 ▸ | 1300214 | 732549 | 610 377,5 | ALM |
| 1.8 i 16V<br>▸ Y5291300, Y8144150 | E | 1796 | X18XE1 | A | + | | 02/98 ▸ 2000 | 1300196 | 732549 | 610 377,5 | ALM |
| 1.8 i 16V<br>▸ Y5291300, Y8144150 | E | 1796 | X18XE1 | A | | | 02/98 ▸ | 1300214 | 732549 | 610 377,5 | ALM |
| 1.8 i 16V<br>▸ Y6129876, Y2279349 | E | 1796 | X18XE1 | M | + | | 02/98 ▸ 2000 | 1300214 | 732549 | 610 377,5 | ALM |
| 1.8 i 16V<br>▸ Y6132349, Y2284093 | E | 1796 | X18XE1 | M | - | | 02/98 ▸ 2000 | 1300187 | 732724 | 540 377,5 | ALM |
| 1.8 i 16V<br>▸ Y8144150, Y5291300 | E | 1796 | X18XE1 | A | - | | 02/98 ▸ 2000 | 1300187 | 732724 | 540 377,5 | ALM |
| 2.0 i 16V | E | 1998 | X20XEV | M | +/- | | 02/98 ▸ 12/99 | 1300241 | 732548 | 610 377,5 | ALM |
| 2.0 i 16V,2.0 i Turbo 16V | E | 1998 | X20XEV,Z20LET | M | + | | 03/98 ▸ 02/04 | 1300241 | 732548 | 610 377,5 | ALM |
| 2.0 i 16V | E | 1998 | X20XEV | M | - | | 03/98 ▸ 12/99 | 1300257 | 732549 | 610 377,5 | ALM |
| 2.0 i 16V,2.0 i Turbo 16V | E | 1998 | X20XEV,Z20LET | M | | | 02/98 ▸ 02/04 | 1300241 | 732548 | 610 377,5 | ALM |
| 2.0 i 16V | E | 1998 | X20XEV | A | + | | 02/98 ▸ 12/99 | 1300241 | 732548 | 610 377,5 | ALM |
| 2.0 i 16V | E | 1998 | X20XEV | A | - | | 02/98 ▸ 12/99 | 1300257 | 732549 | 610 377,5 | ALM |
| 2.0 i 16V<br>Y5291301, Y2276807 ▸ Y2276806, Y5291300 | E | 1998 | X20XEV | M | +/- | | 02/98 ▸ 12/99 | 1300216 | 732548 | 610 377,5 | ALM |
| 2.0 i 16V<br>▸ Y2276806, Y8144150 | E | 1998 | X20XEV | M | | | 02/98 ▸ | 1300216 | 732548 | 610 377,5 | ALM |
| 2.0 i 16V<br>▸ Y2281474, Y2276806 | E | 1998 | X20XEV | A | | | 02/98 ▸ | 1300216 | 732548 | 610 377,5 | ALM |
| 2.0 i 16V<br>▸ Y2281474, Y5291300 | E | 1998 | X20XEV | A | | | 02/98 ▸ | 1300214 | 732549 | 610 377,5 | ALM |
| 2.0 i 16V<br>▸ Y2281474, Y8144150 | E | 1998 | X20XEV | M | | | 02/98 ▸ 02/04 | 1300214 | 732549 | 610 377,5 | ALM |
| 2.0 i 16V<br>Y8144151, Y5291301 ▸ Y5291300, Y2302738 | E | 1998 | X20XEV | M | + | | 03/98 ▸ 12/99 | 1300216 | 732548 | 610 377,5 | ALM |
| 2.0 i 16V<br>▸ Y5291300, Y6129876 | E | 1998 | X20XEV | A | - | | 02/98 ▸ 12/99 | 1300196 | 732549 | 610 377,5 | ALM |

# OPEL (.../...)

## ASTRA G (98>2005) (.../...)

| | | CC | | | AC | | | OE | Valeo | DIM. | TECH |
|---|---|---|---|---|---|---|---|---|---|---|---|
| 2.0 i 16V<br>Y8144151, Y6129877 ▸ Y5291300, Y8144150 | E | 1998 | X20XEV | A | - | | 02/98 ▸ 12/99 | 1300214 | 732549 | 610 377,5 | ALM |
| 2.0 i 16V<br>Y5291301, Y8144151 ▸ Y5291300, Y8144150 | E | 1998 | X20XEV | A | + | | 02/98 ▸ 12/99 | 1300216 | 732548 | 610 377,5 | ALM |
| 2.0 i 16V<br>Y6129877, Y8144151 ▸ Y6129876, Y5291300 | E | 1998 | X20XEV | M | - | | 03/98 ▸ 12/99 | 1300214 | 732549 | 610 377,5 | ALM |
| 2.0 i 16V<br>▸ Y8144150, Y2276806 | E | 1998 | X20XEV | M | +/- | | 02/98 ▸ 12/99 | 1300197 | 732548 | 610 377,5 | ALM |
| 2.0 i 16V<br>▸ Y8144150, Y2276806 | E | 1998 | X20XEV | M | + | | 02/98 ▸ | 1300197 | 732548 | 610 377,5 | ALM |
| 2.0 i 16V<br>▸ Y8144150, Y2281474 | E | 1998 | X20XEV | M | - | | 03/98 ▸ 12/99 | 1300196 | 732549 | 610 377,5 | ALM |
| 2.0 i 16V<br>▸ Y8144150, Y5291300 | E | 1998 | X20XEV | A | + | | 02/98 ▸ 12/99 | 1300197 | 732548 | 610 377,5 | ALM |
| 2.2 i 16V 0BP07P ; BF67P1 | E | 2198 | Z22SE | M | + | | 10/99 ▸ 06/05 | 1300241 | 732548 | 610 377,5 | ALM |
| 2.2 i 16V | E | 2198 | Z22SE | M | + | | 10/99 ▸ 02/04 | 1300257 | 732549 | 610 377,5 | ALM |
| 2.2 i 16V 0BP07P | E | 2198 | Z22SE | M | + | | 02/00 ▸ 02/05 | 93277988 | 732795 | 540 377,5 | ALM |
| 2.2 i 16V 0BP07P | E | 2198 | Z22SE | M | + | | 02/00 ▸ | 1300216 | 732548 | 610 377,5 | ALM |
| 2.2 i 16V 0BP07P | E | 2198 | Z22SE | M | - | | 02/00 ▸ | | 732729 | 610 377,5 | ALM |
| 2.2 i 16V 0BP07P | E | 2198 | Z22SE | M | - | | 02/00 ▸ 02/05 | 90570725 | 732724 | 540 377,5 | ALM |
| 2.2 i 16V 0BP07P ; BF67P1 | E | 2198 | Z22SE | M | - | | 02/00 ▸ 06/05 | 1300257 | 732549 | 610 377,5 | ALM |
| 2.2 i 16V 0BP07P ; BF67P1 | E | 2198 | Z22SE | A | + | | 10/99 ▸ 12/05 | 1300241 | 732548 | 610 377,5 | ALM |
| 2.2 i 16V 0BP07P | E | 2198 | Z22SE | A | + | | 02/00 ▸ | 1300216 | 732548 | 610 377,5 | ALM |
| 2.2 i 16V 0BP07P ; BF67P1 | E | 2198 | Z22SE | A | - | | 10/99 ▸ 12/05 | 1300257 | 732549 | 610 377,5 | ALM |
| 2.2 i 16V 0BP07P | E | 2198 | Z22SE | A | - | | 02/00 ▸ | 1300214 | 732549 | 610 377,5 | ALM |
| 1.7 CDTI,1.7 DTi 16V TU3/5JA/5JF | D | 1686 | Y17DT,Z17DTL | M | +/- | | 02/00 ▸ 02/04 | 1300209 | 734322 | 600 369 | ALB |
| 1.7 TD,1.7 TD Ecoturbo | D | 1699 | X17DTL | M | +/- | | 02/98 ▸ 08/00 | 1300215 | 732550 | 610 377 | CBS |
| 1.7 TD,1.7 TD Ecoturbo | D | 1699 | X17DTL | M | | | 02/98 ▸ 08/00 | 1300215 | 732550 | 610 377 | CBS |
| 1.7 TD,1.7 TD Ecoturbo<br>▸ Y8144150, Y5291300 | D | 1699 | X17DTL | M | +/- | | 02/98 ▸ 2000 | 1300198 | 732550 | 610 377 | CBS |
| 2.0 DTi 16V,2.0 Di 16V<br>X8046786, X5112267 ▸ | D | 1995 | X20DTL,Y20DTH,Y20DTL | M | + | | 02/98 ▸ | 1300208 | 732550 | 610 377 | CBS |
| 2.0 DTi 16V | D | 1995 | Y20DTH | M | - | | 08/99 ▸ | 1300210 | 734388 | 600 368 | |
| 2.0 DTi 16V,2.0 Di 16V | D | 1995 | X20DTL,Y20DTH,Y20DTL | M | | | 02/98 ▸ 02/04 | 1300241 | 732548 | 610 377,5 | ALM |
| 2.0 Di 16V | D | 1995 | X20DTL,Y20DTL | A | + | | 02/98 ▸ 02/04 | 1300241 | 732548 | 610 377,5 | ALM |
| 2.0 DTi 16V | D | 1995 | Y20DTH | A | - | | 08/99 ▸ | 1300210 | 734388 | 600 368 | |
| 2.0 DTi 16V | D | 1995 | Y20DTH | A | | | 08/99 ▸ 02/04 | 1300241 | 732548 | 610 377,5 | ALM |
| 2.0 Di 16V<br>▸ X2117327, X5112266 | D | 1995 | X20DTL | M | + | | 02/98 ▸ 2000 | 1300197 | 732548 | 610 377,5 | ALM |
| 2.0 Di 16V<br>▸ X5112266, X8046785 | D | 1995 | X20DTL | M | + | | 02/98 ▸ 2000 | 1300216 | 732548 | 610 377,5 | ALM |
| 2.0 Di 16V<br>▸ Y2276806, Y5291300 | D | 1995 | X20DTL,Y20DTL | M | | | 02/98 ▸ | 1300216 | 732548 | 610 377,5 | ALM |
| 2.0 Di 16V<br>▸ Y5291300, Y2302738 | D | 1995 | X20DTL,Y20DTL | A | | | 02/98 ▸ | 1300216 | 732548 | 610 377,5 | ALM |
| 2.0 Di 16V<br>▸ Y5291300, Y8144150 | D | 1995 | X20DTL | A | +/- | | 02/98 ▸ 2000 | 1300197 | 732548 | 610 377,5 | ALM |
| 2.0 Di 16V<br>▸ Y8144150, Y2276806 | D | 1995 | X20DTL | M | - | | 02/98 ▸ 2000 | 1300197 | 732548 | 610 377,5 | ALM |
| 2.0 Di 16V<br>Y5291301, Y2276807 ▸ Y8144150, Y5291300 | D | 1995 | X20DTL | M | - | | 02/98 ▸ | 1300216 | 732548 | 610 377,5 | ALM |
| 2.0 Di 16V<br>Y5291301, Y2302739 ▸ Y8144150, Y5291300 | D | 1995 | X20DTL | A | +/- | | 02/98 ▸ | 1300216 | 732548 | 610 377,5 | ALM |
| 2.2 DTI 16V | D | 2171 | Y22DTR | M | + | | 03/01 ▸ 12/05 | 1300241 | 732548 | 610 377,5 | ALM |
| 2.2 DTI 16V BF67PG | D | 2171 | Y22DTR | M | - | | 03/01 ▸ | 1300210 | 734388 | 600 368 | |

## ASTRA H (2004>)

| | | | | | | | | | | | |
|---|---|---|---|---|---|---|---|---|---|---|---|
| 1.4 i GPL 16V | F | 1364 | A14XEL | M | | | 03/05 ▸ 09/10 | 1300265 | 734381 | 600 370 | |
| 1.2 i Twinport 16V | E | 1229 | Z12XEP | M | +/- | | 03/04 ▸ | 1300265 | 734381 | 600 370 | |
| 1.4 i Twinport 16V | E | 1364 | Z14XEL | M | +/- | | 03/04 ▸ | 1300265 | 734381 | 600 370 | |
| 1.4 i Twinport 16V | E | 1364 | Z14XEP | M | | | 03/04 ▸ | 1300265 | 734381 | 600 370 | |
| 1.6 i 16V,1.6 i Twinport 16V | E | 1598 | Z16XEP,Z16XER | M | +/- | | 03/05 ▸ | 1300266 | 734382 | 600 370 | ALB |
| 1.6 i Twinport 16V | E | 1598 | Z16XEP,Z16XER | M | | | 03/04 ▸ | 1300266 | 734382 | 600 370 | ALB |
| 1.6 i Twinport 16V | E | 1598 | Z16XEP,Z16XER | A | +/- | | 03/05 ▸ | 1300266 | 734382 | 600 370 | ALB |
| 1.6 i Twinport 16V | E | 1598 | Z16XEP,Z16XER | A | | | 03/04 ▸ | 1300266 | 734382 | 600 370 | ALB |
| 1.8 i 16V | E | 1796 | Z18XER | M | +/- | | 08/05 ▸ | 1300266 | 734382 | 600 370 | ALB |
| 1.8 i 16V | E | 1796 | Z18XE | M | +/- | | 09/05 ▸ | 1300265 | 734381 | 600 370 | |
| 1.8 i 16V | E | 1796 | Z18XE,Z18XER | M | | | 03/04 ▸ | 1300265 | 734381 | 600 370 | |
| 1.8 i 16V | E | 1796 | Z18XER | M | | | 02/07 ▸ | 1300266 | 734382 | 600 370 | ALB |
| 1.8 i 16V | E | 1796 | Z18XE | A | | | 03/04 ▸ | 1300265 | 734381 | 600 370 | |

Radiator Radiateur Motorkühler Radiatore di raffreddamento Radiator Radyatör Radiador Радиатор vízhűtő Vodní chladič Radiator Ψυγείο



• **New** Nouveau **Nuevo** Novo **Nuovo** Nieuw **Neu** Nowość **Yeni** Новый Νέο **Novy**

# OPEL (.../...)

## ASTRA H (2004>) (.../...)

| Type Ctr. | | CC | | | AC | | | OE | Valeo | DIM. | TECH |
|---|---|---|---|---|---|---|---|---|---|---|---|
| 1.8 i 16V | E | 1796 | Z18XER | A | | | 08/05 ▸ | 1300266 | **734382** | 600 370 | ALB |
| 2.0 i Turbo 16V | E | 1998 | Z20LEH,Z20LER | M | +/- | | 07/04 ▸ | 1300271 | **735080** | 600 370 | ALB |
| 2.0 i Turbo 16V | E | 1998 | Z20LEL | M | +/- | | 09/05 ▸ | 1300267 | **734432** | 600 370 | ALB |
| 2.0 i Turbo 16V | E | 1998 | Z20LEL,Z20LER | M | | | 03/04 ▸ | 1300267 | **734432** | 600 370 | ALB |
| 2.2 i 16V | E | 2198 | Z22YH | M | | | 11/04 ▸ 02/06 | 1300267 | **734432** | 600 370 | ALB |
| 1.3 CDTI 16V<br>65016700 ▸ | D | 1248 | Z13DTH | M | +/- | | 08/05 ▸ | 1300269 | **734380** | 600 370 | |
| 1.3 CDTI 16V<br>65025596 ▸ | D | 1248 | Z13DTH | M | | | > ▸ | 1300269 | **734380** | 600 370 | |
| 1.3 CDTI 16V<br>▸ 65016699 | D | 1248 | Z13DTH | M | +/- | | 08/05 ▸ | 1300271 | **735080** | 600 370 | ALB |
| 1.3 CDTI 16V<br>▸ 65025595 | D | 1248 | Z13DTH | M | | | 08/05 ▸ | 1300271 | **735080** | 600 370 | ALB |
| 1.7 CDTI,1.7 CDTI 16V<br>5200000, 52000001 ▸ | D | 1686 | Z17DTH,Z17DTL | M | +/- | | > ▸ | 1300269 | **734380** | 600 370 | |
| 1.7 CDTI,1.7 CDTI 16V<br>52000001, 82000001 ▸ | D | 1686 | A17DTJ/F,Z17DTH,Z17DTJ/F,Z17DTL | M | | | > ▸ | 1300269 | **734380** | 600 370 | |
| 1.7 CDTI 16V<br>▸ 45999999 | D | 1686 | Z17DTH | M | + | | 03/04 ▸ | 1300269 | **734380** | 600 370 | |
| 1.7 CDTI 16V<br>▸ 45999999, 49999999 | D | 1686 | Z17DTH | M | - | | 03/04 ▸ | 1300268 | **734383** | 600 370 | |
| 1.7 CDTI 16V<br>▸ 72999999 | D | 1686 | A17DTJ/F,A17DTR/F,Z17DTJ/F,Z17DTR/F | M | | | 02/07 ▸ | 1300271 | **735080** | 600 370 | ALB |
| 1.9 CDTI 16V | D | 1910 | Z19DTH,Z19DTJ | M | +/- | | 07/04 ▸ | 1300271 | **735080** | 600 370 | ALB |
| 1.9 CDTI | D | 1910 | Z19DT,Z19DTL | M | +/- | | 03/05 ▸ | 1300269 | **734380** | 600 370 | |
| 1.9 CDTI 16V | D | 1910 | Z19DTJ | M | | | 07/04 ▸ | 1300269 | **734380** | 600 370 | |
| 1.9 CDTI 16V | D | 1910 | Z19DTJ | A | +/- | | 11/06 ▸ 08/08 | 1300271 | **735080** | 600 370 | ALB |

## CALIBRA

| | | | | | | | | | | | |
|---|---|---|---|---|---|---|---|---|---|---|---|
| 2.0 i 16V JM07IC<br>M1000325 ▸ | E | 1998 | X20XEV | M | + | TSW | > ▸ 07/97 | 1300122 | **730395** | 540 377,5 | ALM |
| 2.0 i,2.0 i 16V JM0/71A/71C/7DA/7DC 7IC<br>M1000325 ▸ | E | 1998 | C20NE,C20XE,X20XEV | M | + | TSW | 10/89 ▸ 07/97 | 1300133 | **731175** | 620 377,5 | ALM |
| 2.0 i,2.0 i 16V JM0/71A/71C/7DA/7DC 7IC | E | 1998 | C20NE,C20XE,X20XEV | M | - | TSW | 09/89 ▸ 07/97 | 1300135 | **731174** | 620 377,5 | ALM |
| 2.0 i,2.0 i 16V JM07DB<br>M1000325 ▸ | E | 1998 | C20NE,X20XEV | A | + | TSW | 10/89 ▸ 07/97 | 1300133 | **731175** | 620 377,5 | ALM |
| 2.0 i 16V | E | 1998 | X20XEV | A | + | TSW | 06/94 ▸ 07/97 | 1300122 | **730395** | 540 377,5 | ALM |
| 2.0 i,2.0 i 16V JM07DB | E | 1998 | C20NE,X20XEV | A | - | TSW | 09/89 ▸ 07/97 | 1300135 | **731174** | 620 377,5 | ALM |
| 2.0 i,2.0 i 16V JM0/71A/71C/7DA/7DC<br>▸ M1000324 | E | 1998 | C20NE,C20XE | M | + | TSW | 09/89 ▸ 10/89 | 1300135 | **731174** | 620 377,5 | ALM |
| 2.0 i JM07DB<br>▸ M1000324 | E | 1998 | C20NE | A | + | TSW | 09/89 ▸ 10/89 | 1300135 | **731174** | 620 377,5 | ALM |
| 2.5 i V6 24V | E | 2498 | C25XE,X25XE-170 | M | +/- | | 05/93 ▸ 07/97 | 1300146 | **734604** | 617 374 | ALB |
| 2.5 i V6 24V | E | 2498 | C25XE,X25XE-170 | A | +/- | | 05/93 ▸ 07/97 | 1300146 | **734604** | 617 374 | ALB |

## CORSA A (82>93)

| | | | | | | | | | | | |
|---|---|---|---|---|---|---|---|---|---|---|---|
| 1.0 S24/08 ; S28/08/68 ; SC2/491/492/493/494/4B9 891/892/893/894/8B9 ; SC4/249/24B/289/28B SC5/249/289 | E | 993 | 10S | M | - | TSW | 10/82 ▸ 1993 | 1302014 | **883767** | 530 299 | ALM |
| 1.2 S64/GV/GV0/GV6/NC/NC0/NC6 | E | 1195 | 12NC,E12GV | M | - | TSW | 01/85 ▸ 10/89 | 1302014 | **883767** | 530 299 | ALM |
| 1.2 i | E | 1195 | C12NZ | M | - | TSW | 07/91 ▸ 1993 | 1302016 | **883920** | 530 229 | ALM |
| 1.2 i S7408 | E | 1195 | C12NZ | M | - | TSW | 07/91 ▸ 1993 | 1300016 | **883920** | 530 229 | ALM |
| 1.2 | E | 1195 | 12NC,E12GV | M | | TSW | 02/86 ▸ 04/89 | 1302014 | **883767** | 530 299 | ALM |
| 1.2 i | E | 1195 | C12NZ | M | | TSW | 07/91 ▸ 1993 | 1300016 | **883920** | 530 229 | ALM |
| 1.2 S64/08/19/68/NV0/NV1/NV6 ; S68/08/68 ; SC4 649/64B/689/68B ; SC5/649/689 ; SM808 ; SC6 491/492/493/494/4B9/893/8A9/8AB<br>F4253976 ▸ | E | 1196 | 12NV,12ST | M | - | TSW | > ▸ 1993 | 1300016 | **883920** | 530 229 | ALM |
| 1.2 S64/08/19/68 ; S68/08/68 ; SC4/649/64B/689 68B ; SC5/649/689 ; SM808 ; SC6/491/492/493 494/4B9/893/8A9/8AB<br>F4253976 ▸ | E | 1196 | 12ST | M | - | TSW | > ▸ 1993 | 1302016 | **883920** | 530 229 | ALM |
| 1.2 | E | 1196 | 12S | M | | TSW | 10/82 ▸ 08/90 | 1302015 | **883771** | 530 285 | ALM |
| 1.2 S64/08/19/68 ; S68/08/68 ; SC4/649/64B/689 68B ; SC5/649/689 ; SM808 ; SC6/491/492/493 494/4B9/893/8A9/8AB<br>▸ F4253975 | E | 1196 | 12ST | M | - | TSW | 10/82 ▸ | 1302015 | **883771** | 530 285 | ALM |

# OPEL (.../...)

## CORSA A (82>93) (.../...)

| | | CC | | AC | | | OE | Valeo | DIM. | TECH |
|---|---|---|---|---|---|---|---|---|---|---|
| 1.3,1.3 i SA4/08/19/68/GT8 SC5A49 ; SC4/A49/A4B ; SCA/491/492/493/494 4B9/4R9 J4327959, F4253976 ▸ | E | 1297 | 13SB,C13N | M | - | TSW | > ▸ 09/90 | 1300016 | **883920** | 530 229 | ALM |
| 1.3,1.3 i SA4/08/19/68/GT8 SC5A49 ; SC4/A49/A4B ; SCA/491/492/493/494 4B9/4R9 J4327959, J4327959/88 ▸ | E | 1297 | 13SB,C13N | M | - | TSW | > ▸ 09/90 | 1302016 | **883920** | 530 229 | ALM |
| 1.3 i | E | 1297 | 13NB | M | | TSW | > ▸ 10/89 | 1300016 | **883920** | 530 229 | ALM |
| 1.3,1.3 i SA4/08/19/68/GT8 SC5A49 ; SC4/A49/A4B ; SCA/491/492/493/494 4B9/4R9 ▸ J4327958 | E | 1297 | 13SB,C13N | M | - | TSW | 10/82 ▸ | 1302015 | **883771** | 530 285 | ALM |
| 1.3 i ▸ J4327958, F4253975 | E | 1297 | 13NB,C13N | M | | TSW | 09/85 ▸ | 1302015 | **883771** | 530 285 | ALM |
| 1.4,1.4 i S4308 ; S34/08/11/19 68/GT8/SP0 ; SC4/08/19/68 | E | 1389 | 14NV,C14NZ,C14SE | M | - | TSW | 09/89 ▸ 1993 | 1300016 | **883920** | 530 229 | ALM |
| 1.4,1.4 i S4308 ; S34/SP0 SC4/08/19/68 | E | 1389 | C14NZ,C14SE | M | - | TSW | 07/91 ▸ 1993 | 1302015 | **883771** | 530 285 | ALM |
| 1.6 i S ; SP308 | E | 1598 | C16NZ,C16SE,C16SEI,E16SE | M | - | TSW | 03/88 ▸ 03/93 | 1302015 | **883771** | 530 285 | ALM |
| 1.6 i S ; SP308 | E | 1598 | C16NZ,C16SE,C16SEI,E16SE | M | - | TSW | 03/88 ▸ 03/93 | 1300016 | **883920** | 530 229 | ALM |
| 1.6 i S | E | 1598 | C16NZ | M | | TSW | 1990 ▸ 03/93 | 1302015 | **883771** | 530 285 | ALM |
| 1.5 D SF4/08/19/68 | D | 1488 | 4EC1 | M | - | TSW | 09/87 ▸ 1993 | 1300051 | **819388** | 690 268 | ALB |
| 1.5 TD SB4/08/19/68 ; SG4 08/19/68 | D | 1488 | T4EC1 | M | - | TSW | 03/88 ▸ 1993 | 1300081 | **819389** | 690 268 | ALB |

## CORSA B (93>2000)

| | | CC | | AC | | | OE | Valeo | DIM. | TECH |
|---|---|---|---|---|---|---|---|---|---|---|
| 1.0 i 12V S93/CN1/DN1 | E | 973 | X10XE | M | + | TSW | 03/97 ▸ 08/00 | 1300152 | **732032** | 680 273 | ALM |
| 1.0 i 12V S93/CN1/DN1 | E | 973 | X10XE | M | + | TSW | 03/97 ▸ 08/00 | 1300192 | **732607** | 680 285 | ALM |
| 1.0 i 12V S93/CN1/DN1 | E | 973 | X10XE | M | + | TSW | 03/97 ▸ 08/00 | 1300153 | **734271** | 680 273 | ALB |
| 1.0 i 12V S93/CN1/DN1 | E | 973 | X10XE | M | + | TSW | 1998 ▸ 08/00 | 1300205 | **732607** | 680 285 | ALM |
| 1.0 i 12V S93/CN1/DN1 | E | 973 | X10XE | M | - | TSW | 03/97 ▸ 08/00 | 1300173 | **732606** | 530 285 | ALB |
| 1.2,1.2 i S93/CB1/DB1 | E | 1195 | 12NZ,C12NZ,X12SZ | M | + | TSW | 03/93 ▸ 08/00 | 1300152 | **732032** | 680 273 | ALM |
| 1.2,1.2 i S93/CB1/DB1 | E | 1195 | 12NZ,C12NZ,X12SZ | M | + | TSW | 03/93 ▸ 08/00 | 1300153 | **734271** | 680 273 | ALB |
| 1.2,1.2 i S93/CB1/DB1 | E | 1195 | 12NZ,C12NZ,X12SZ | M | - | TSW | 03/93 ▸ 08/00 | 1300149 | **731013** | 530 285 | ALM |
| 1.2,1.2 i S93/CB1/DB1 | E | 1195 | 12NZ,C12NZ,X12SZ | M | - | TSW | 03/93 ▸ 08/00 | 1300150 | **731178** | 530 285 | ALM |
| 1.2,1.2 i S93/CB1/DB1 T4257028 ▸ W4158793, S4276216 | E | 1195 | 12NZ,C12NZ,X12SZ | M | +/- | TSW | 03/93 ▸ 1998 | 1300149 | **731013** | 530 285 | ALM |
| 1.2 i 16V | E | 1199 | X12XE | M | + | TSW | 03/98 ▸ 08/00 | 1300152 | **732032** | 680 273 | ALM |
| 1.2 i 16V | E | 1199 | X12XE | M | + | TSW | 03/98 ▸ 08/00 | 1300205 | **732607** | 680 285 | ALM |
| 1.2 i 16V | E | 1199 | X12XE | M | + | TSW | 03/98 ▸ 08/00 | 1300153 | **734271** | 680 273 | ALB |
| 1.2 i 16V | E | 1199 | X12XE | M | - | TSW | 03/98 ▸ 08/00 | 1300173 | **732606** | 530 285 | ALB |
| 1.2 i 16V | E | 1199 | X12XE | A | +/- | | 03/98 ▸ 08/00 | 1300206 | | 680 285 | ALM |
| 1.2 i 16V | E | 1199 | X12XE | A | + | TSW | 03/98 ▸ 08/00 | 1300153 | **734271** | 680 273 | ALB |
| 1.2 i 16V | E | 1199 | X12XE | A | - | TSW | 03/98 ▸ 08/00 | 1300150 | **731178** | 530 285 | ALM |
| 1.4 i,1.4 i 16V S93/CJ1/CM1/DJ1/DM1 | E | 1389 | C14NZ,C14SE,X14SZ,X14XE | M | + | TSW | 03/93 ▸ 08/00 | 1300153 | **734271** | 680 273 | ALB |
| 1.4 i,1.4 i 16V S93/CJ1/CM1/DJ1/DM1 | E | 1389 | C14NZ,C14SE,X14SZ,X14XE | M | + | TSW | 03/93 ▸ 08/00 | 1300152 | **732032** | 680 273 | ALM |
| 1.4 i,1.4 i 16V S93/CJ1/CM1/DJ1/DM1 | E | 1389 | C14NZ,C14SE,X14SZ,X14XE | M | - | TSW | 03/93 ▸ 08/00 | 1300150 | **731178** | 530 285 | ALM |
| 1.4 i,1.4 i 16V S93/CJ1/CM1/DJ1/DM1 | E | 1389 | C14NZ,X14SZ,X14XE | A | + | TSW | 09/93 ▸ 08/00 | 1300153 | **734271** | 680 273 | ALB |
| 1.4 i,1.4 i 16V S93/CJ1/CM1/DJ1/DM1 | E | 1389 | C14NZ,X14SZ,X14XE | A | - | TSW | 09/93 ▸ 08/00 | 1300150 | **731178** | 530 285 | ALM |
| 1.4 i T4257028 ▸ W4158793 | E | 1389 | C14NZ | M | +/- | TSW | 1996 ▸ 1998 | 1300149 | **731013** | 530 285 | ALM |
| 1.4 i,1.4 i 16V S93/CJ1/CM1/DJ1/DM1 ▸ W4158793 | E | 1389 | C14NZ,C14SE,X14SZ,X14XE | M | - | TSW | 03/93 ▸ 08/00 | 1300149 | **731013** | 530 285 | ALM |
| 1.6 i,1.6 i 16V | E | 1598 | C16SEL,C16XE,X16XE | M | + | TSW | 03/93 ▸ 08/00 | 1300153 | **734271** | 680 273 | ALB |
| 1.6 i,1.6 i 16V | E | 1598 | C16SEL,C16XE,X16XE | M | + | TSW | 03/93 ▸ 08/00 | 1300152 | **732032** | 680 273 | ALM |
| 1.6 i 16V | E | 1598 | X16XE | M | - | TSW | 03/93 ▸ 08/00 | 1300050 | **731217** | 520 370 | CBS |
| 1.6 i,1.6 i 16V | E | 1598 | C16SEL,C16XE,X16XE | M | - | TSW | 03/93 ▸ 08/00 | 1300150 | **731178** | 530 285 | ALM |
| 1.5 D,1.5 TD | D | 1488 | 15D,15TD | M | +/- | TSW | 03/93 ▸ 08/00 | 1300151 | **731179** | 650 266 | ALB |
| 1.7 D S93/CL1/DL1 | D | 1686 | X17D | M | +/- | TSW | 03/93 ▸ 08/00 | 1300151 | **731179** | 650 266 | ALB |

## CORSA C (2000>2003)

| | | CC | | AC | | | OE | Valeo | DIM. | TECH |
|---|---|---|---|---|---|---|---|---|---|---|
| 1.0 i 12V 0AB/08C/68C | E | 973 | Z10XE | M | + | | 09/00 ▸ 08/03 | 1300236 | **732825** | 540 377,5 | ALM |
| 1.0 i 12V 0AB/08C/68C | E | 973 | Z10XE | M | - | | 09/00 ▸ 08/03 | 1300250 | **732825** | 540 377,5 | ALM |
| 1.2 i 16V | E | 1199 | Z12XE | M | +/- | | 09/00 ▸ 08/03 | 1300236 | **732825** | 540 377,5 | ALM |
| 1.2 i 16V 0AB/08E/68E ; 0AE 08E/68E ; 0AS/08E/68E | E | 1199 | Z12XE | M | - | | 09/00 ▸ 08/03 | 1300236 | **732825** | 540 377,5 | ALM |
| 1.4 i 16V 0AE/08G/68G ; 0AS 08G/68G | E | 1389 | Z14XE | M | - | | 09/00 ▸ 08/03 | 1300237 | **732826** | 540 377,5 | ALM |
| 1.4 i 16V 0AE/08G/68G | E | 1389 | Z14XE | A | | | 09/00 ▸ 08/03 | 1300237 | **732826** | 540 377,5 | ALM |

Radiator Ψυγείο Vodní chladič Радиатор vízhűtő Radiador Radiator Radyatör Radiator Radiatore di raffreddamento Motorkühler Radiateur Radiator



• **New** Nouveau **Nuevo** Novo **Nuovo** Nieuw **Neu** Nowość **Yeni** Новый Νέο **Nový**

# OPEL (.../...)

## CORSA C (2000>2003) (.../...)

| | | | | | | | | | | | | |
|---|---|---|---|---|---|---|---|---|---|---|---|---|
| 1.8 i 16V | 0AG08K ; 0AE/08K 0AS/08K/68K | E | 1796 | Z18XE | M | - | | 09/00 ▸ 08/03 | 1300237 | **732826** | 540 377,5 | ALM |
| 1.7 DI 16V,1.7 DTi 16V | 0AB/08J/68J ; 0AE 08J/68J ; 0AS/08J/68J | D | 1686 | Y17DT,Y17DTL | M | +/- | | 09/00 ▸ 08/03 | 1300233 | **732824** | 628 377,5 | ALM |

## CORSA C (2003>)

| | | | | | | | | | | | | |
|---|---|---|---|---|---|---|---|---|---|---|---|---|
| 1.0 i Twinport 12V | AB68CF ; AC08CF AC68CF ; AB0/8CF | E | 998 | Z10XEP | M | + | | 09/03 ▸ 07/06 | 1300236 | **732825** | 540 377,5 | ALM |
| 1.0 i Twinport 12V | AB68CF ; AC08CF AC68CF ; AB0/8CF | E | 998 | Z10XEP | M | - | | 09/03 ▸ 07/06 | 1300250 | **732825** | 540 377,5 | ALM |
| 1.2 i 16V | AB68EE ; AB0/8EE AC0/8EB/8EE ; AC6/8EB/8EE ; AE0/8EB/8EE AE6/8EB/8EE ; AS0/8EB/8EE ; AS6/8EB/8EE | E | 1199 | Z12XE | M | +/- | | 09/03 ▸ 08/04 | 1300236 | **732825** | 540 377,5 | ALM |
| 1.2 i 16V | AB68EE ; AB0/8EE AC0/8EB/8EE ; AC6/8EB/8EE ; AE0/8EB/8EE AE6/8EB/8EE ; AS0/8EB/8EE ; AS6/8EB/8EE | E | 1199 | Z12XE | M | - | | 09/03 ▸ 08/04 | 1300250 | **732825** | 540 377,5 | ALM |
| 1.2 i Twinport 16V | 0AM08 | E | 1229 | Z12XEP | M | +/- | | 09/03 ▸ 07/06 | 1300236 | **732825** | 540 377,5 | ALM |
| 1.4 i Twinport 16V | F08/GAB/GS5 ; F68 GAB/GS5 | E | 1364 | Z14XEP | M | +/- | | 09/03 ▸ 07/06 | 1300236 | **732825** | 540 377,5 | ALM |
| 1.4 i Twinport 16V | F08/GAB/GS5 ; F68 GAB/GS5 | E | 1364 | Z14XEP | M | - | | 09/03 ▸ 07/06 | 1300250 | **732825** | 540 377,5 | ALM |
| 1.4 i Twinport 16V | F08/GAB/GS5 ; F68 GAB/GS5 | E | 1364 | Z14XEP | M | - | | 09/03 ▸ 07/06 | 1300237 | **732826** | 540 377,5 | ALM |
| 1.8 i 16V | AS08KE ; AS68KE | E | 1796 | Z18XE | M | - | | 09/03 ▸ 07/06 | 1300237 | **732826** | 540 377,5 | ALM |
| 1.3 CDTI 16V | AB68FA ; AC08FA AC68FA ; AE08FA ; AE68FA ; AS08FA ; AS68FA AB0/8FA | D | 1248 | Z13DT | M | + | | 09/03 ▸ 07/06 | 1300259 | **734464** | 600 350 | ALM |
| 1.3 CDTI 16V | AB68FA ; AC08FA AC68FA ; AE08FA ; AE68FA ; AS08FA ; AS68FA AB0/8FA | D | 1248 | Z13DT | M | - | | 09/03 ▸ 07/06 | 1300261 | **734464** | 600 350 | ALM |
| 1.3 CDTI 16V | AB68FA ; AC08FA AC68FA ; AE08FA ; AE68FA ; AS08FA ; AS68FA AB0/8FA | D | 1248 | Z13DT | M | | | 09/03 ▸ 07/06 | 1300233 | **732824** | 628 377,5 | ALM |
| 1.7 DI 16V | | D | 1686 | Y17DTL | M | +/- | | 09/03 ▸ 07/04 | 1300233 | **732824** | 628 377,5 | ALM |
| 1.7 CDTI 16V | AE68JK ; AS08JK AS68JK ; AE0/8JK | D | 1686 | Z17DTH | M | + | | 09/03 ▸ 07/06 | 1300259 | **734464** | 600 350 | ALM |
| 1.7 CDTI 16V | AE68JK ; AS08JK AS68JK ; AE0/8JK | D | 1686 | Z17DTH | M | - | | 09/03 ▸ 07/06 | 1300261 | **734464** | 600 350 | ALM |
| 1.7 DI 16V | | D | 1686 | Y17DTL | M | | | 09/03 ▸ 07/04 | 1300259 | **734464** | 600 350 | ALM |
| 1.7 CDTI 16V | AE68JK ; AS08JK AS68JK ; AE0/8JK | D | 1686 | Z17DTH | M | | | 09/03 ▸ 07/06 | 1300233 | **732824** | 628 377,5 | ALM |

## CORSA D (2006>)

| | | | | | | | | | | | | |
|---|---|---|---|---|---|---|---|---|---|---|---|---|
| 1.0 i Twinport 65 12V | | E | 997 | A10XEP | M | | | 01/10 ▸ | 1300279 | **735097** | 540 377,5 | ALM |
| 1.0 i Twinport 12V | | E | 998 | Z10XEP | M | +/- | | 07/06 ▸ | 1300279 | **735097** | 540 377,5 | ALM |
| 1.2 i Twinport 16V | | E | 1229 | Z12XEP | M | +/- | | 07/06 ▸ | 1300279 | **735097** | 540 377,5 | ALM |
| 1.4 i Twinport 16V | | E | 1364 | Z14XEP | M | +/- | | 07/06 ▸ | 1300279 | **735097** | 540 377,5 | ALM |
| 1.4 i Twinport 16V | | E | 1364 | Z14XEP | A | +/- | | 07/06 ▸ | 1300279 | **735097** | 540 377,5 | ALM |
| 1.6 i Turbo 16V | | E | 1598 | Z16LER | M | +/- | | 02/07 ▸ | 1300287 | **735041** | 620 414,5 | ALB |
| 1.6 i Turbo 16V | | E | 1598 | A16LEL,A16LER,Z16LEL | M | | | 02/07 ▸ | 1300287 | **735041** | 620 414,5 | ALB |
| 1.3 CDTI 90 16V | | D | 1248 | Z13DTH | M | +/- | | 07/06 ▸ | 1300287 | **735041** | 620 414,5 | ALB |
| 1.3 CDTI 75 16V | | D | 1248 | Z13DTJ,Z13DTJ/F | M | +/- | | 07/06 ▸ | 1300415 | **735040** | 620 395 | ALB |
| 1.3 CDTI 90 16V,1.3 CDTI 95 16V | 940000001 ▸ | D | 1248 | A13DTE/F,A13DTR,Z13DTE,Z13DTH | M | | | > ▸ | 1300287 | **735041** | 620 414,5 | ALB |
| 1.7 CDTI 125 FAP 16V | | D | 1686 | Z17DTR/F | M | +/- | | 09/06 ▸ | 1300287 | **735041** | 620 414,5 | ALB |
| 1.7 CDTI 130 16V | | D | 1686 | A17DTS/F | M | | | 01/10 ▸ | 1300287 | **735041** | 620 414,5 | ALB |

## FRONTERA (91>98)

| | | | | | | | | | | | | |
|---|---|---|---|---|---|---|---|---|---|---|---|---|
| 2.0 i | 52SUD2 | E | 1998 | C20NE | M | | TSW | 03/91 ▸ 04/95 | 6302002 | **735229** | 500 620 | |
| 2.0 i | 55SUD2 | E | 1998 | X20SE | M | | TSW | 04/95 ▸ 09/98 | 1302058 | **731236** | 425 595 | CBS |
| 2.2 i 16V | 54MWL4 | E | 2198 | X22XE | M | | TSW | 04/95 ▸ 09/98 | 1302058 | **731236** | 425 595 | CBS |
| 2.4 i | 53MWL4 | E | 2410 | C24NE | M | | TSW | 03/91 ▸ 04/95 | 6302002 | **735229** | 500 620 | |
| 2.3 TD | 5JM/UL4/WL4 | D | 2260 | 23DTR | M | | | 03/91 ▸ 04/95 | 6302003 | **731237** | 423 585 | ALB |
| 2.5 TDS | 5KMWL4 ; 5KSUD2 | D | 2499 | 25TDS | M | | | 06/96 ▸ 09/98 | 6302020 | **734353** | 410 610 | ALB |
| 2.8 TDi | 5BMWL4 ; 5BSUD2 | D | 2771 | 4JB1-TC | M | | | 05/95 ▸ 07/96 | 1300157 | **731237** | 423 585 | ALB |

## INSIGNIA

| | | | | | | | | | | | | |
|---|---|---|---|---|---|---|---|---|---|---|---|---|
| 1.6 i 115 16V,1.6 i 16V,1.6 i 180 16V | | E | 1598 | A16LET,A16XER | M | + | | 01/09 ▸ | 1300292 | •**735485** | 680 398 | ALB |
| 1.8 i 140 16V,1.8 i 16V | | E | 1796 | A18XER | M | + | | 01/09 ▸ | 1300292 | •**735485** | 680 398 | ALB |
| 2.0 i 16V,2.0 i 220 16V | | E | 1998 | A20NHT | M | + | | 01/09 ▸ | 1300293 | •**735483** | 680 398 | ALB |

# OPEL (.../...)

## INSIGNIA (.../...)

| | | CC | | AC | | | OE | Valeo | DIM. | TECH |
|---|---|---|---|---|---|---|---|---|---|---|
| 2.0 i 16V,2.0 i 220 16V | E | 1998 | A20NHT | A | + | | 01/09 ▸ | 1300294 | •735484 | 680 398 | ALB |
| 2.8 i V6 24V | E | 2792 | A28NER,A28NET | M | + | | 01/09 ▸ | 1300289 | •735488 | 680 398 | ALB |
| 2.8 i V6 24V | E | 2792 | A28NET | A | + | | 01/09 ▸ | 1300288 | •735487 | 680 398 | ALB |
| 2.0 CDTI 16V,2.0 CDTI BiTurbo 190 16V | D | 1956 | A20DTH/F,A20DTR | M | + | | 07/09 ▸ | 1300291 | •735482 | 680 398 | ALB |
| 2.0 CDTI 16V | D | 1956 | A20DTH/F,A20DTJ/F | A | + | | 01/09 ▸ | 1300290 | •735486 | 680 398 | ALB |
| 2.0 CDTI 16V | D | 1956 | A20DTJ/F | A | + | | 09/09 ▸ | 1300291 | •735482 | 680 398 | ALB |

## KADETT C (73>79)

| | | | | | | | | | | | |
|---|---|---|---|---|---|---|---|---|---|---|---|
| 1000,1000 S | E | 993 | 10N,10S | M | - | | 08/73 ▸ 07/79 | 1302099 | | 298 291 | CBS |
| 1000,1000 S | E | 993 | 10N,10S | M | | | 08/73 ▸ 07/79 | 1302099 | | 298 291 | CBS |
| 1200 N,1200 S | E | 1196 | 12N,12S | M | - | | 08/73 ▸ 07/79 | 1302099 | | 298 291 | CBS |
| 1200 N,1200 S | E | 1196 | 12N,12S | M | | | 08/73 ▸ 07/79 | 1302099 | | 298 291 | CBS |
| 1900 | E | 1897 | 19E | M | - | | 08/75 ▸ 12/77 | 1302091 | | 352 460 | CBS |
| 2000,2000 E | E | 1979 | 20E,20EH | M | - | | 10/77 ▸ 07/79 | 1302091 | | 352 460 | CBS |

## KADETT D (79>84)

| | | | | | | | | | | | |
|---|---|---|---|---|---|---|---|---|---|---|---|
| 1.0 | E | 993 | 10N,10S | M | - | | 08/79 ▸ 07/82 | 1302197 | | 420 285 | ALM |
| 1.2 T82/50/80 ; T83/50/58/80 ; T84/50/58/80/88 | E | 1196 | 12N,12S | M | - | | 08/79 ▸ 07/84 | 1302197 | | 420 285 | ALM |
| 1.2 T83/58A ; T84/543/544/584/58A | E | 1196 | 12S | M | - | | 07/82 ▸ 07/84 | 1302199 | | 420 285 | ALM |
| 1.3 T33/274/278 ; T34/274/278 ; T46/274/278/294 298 ; T84/90A/943/94R | E | 1297 | 13N,13S | M | - | TSW | 08/79 ▸ 08/84 | 1302189 | 883751 | 530 285 | ALM |
| 1.3 T34278 ; T33/278 ; T46/278/298 ; T84/90/94 | E | 1297 | 13N,13S | A | - | TSW | 08/79 ▸ 08/84 | 1302189 | 883751 | 530 285 | ALM |
| 1.6 T84/4/44A/4AR | E | 1598 | 16SH | M | +/- | | 09/81 ▸ 08/84 | 1302192 | | 530 414 | ALM |
| 1.6 T84/4/44A/4AR | E | 1598 | 16SH | M | | TSW | 09/81 ▸ 08/84 | 1300205 | 732607 | 680 285 | ALM |
| 1.6 T844 | E | 1598 | 16SH | A | - | | 09/81 ▸ 08/84 | 1302194 | | 530 414 | ALM |
| 1.8 i T82/W33/W43 | E | 1796 | 18E | M | +/- | | 05/83 ▸ 08/84 | 1302192 | | 530 414 | ALM |
| 1.8 i T82/W33/W43 | E | 1796 | 18E | M | | TSW | 05/83 ▸ 08/84 | 1300205 | 732607 | 680 285 | ALM |
| 1.8 i T82W | E | 1796 | 18E | A | - | | 05/83 ▸ 08/84 | 1302194 | | 530 414 | ALM |
| 1.6 D T84T43 | D | 1598 | D16 | M | - | | 04/82 ▸ 08/84 | 1302192 | | 530 414 | ALM |
| 1.6 D T83/T43/T44/T83/T84 ; T84/T43/T44/T83/T84 | D | 1598 | D16 | M | - | | 04/82 ▸ 08/84 | 1302006 | | 530 414 | ALM |
| 1.6 D T84T43 | D | 1598 | D16 | M | | TSW | 04/82 ▸ 08/84 | 1300205 | 732607 | 680 285 | ALM |

## KADETT E (84>91)

| | | | | | | | | | | | |
|---|---|---|---|---|---|---|---|---|---|---|---|
| 1.2 S E83/543/544/583/584/58B ; E84/543/544/54B 583/584/58B ; T54/08/19/48 ; T58/08/19/48 | E | 1196 | 12S,12ST | M | - | TSW | 08/84 ▸ | 1302049 | 883856 | 530 285 | ALM |
| 1.2 S T54/08/19/35/48 ; T58/08/19/35/48 | E | 1196 | 12S | M | - | TSW | 09/84 ▸ 1991 | 1302074 | 883857 | 530 285 | ALM |
| 1.3,1.3 N,1.3 S E83/943/944/94B/983 984/98B ; E84/943/944/94B/94R/983/984/98B T94/08/19/35/48/GT ; TN448 ; T98/08/19/35 48 | E | 1297 | 13N,13S,C13N | M | - | TSW | 08/84 ▸ 08/91 | 1302074 | 883857 | 530 285 | ALM |
| 1.3,1.3 N,1.3 S T94/08/19/35/48/GT TN448 ; T98/08/19/35/48 | E | 1297 | 13N,13S,C13N | M | - | TSW | 09/84 ▸ 08/91 | 1302057 | 883880 | 525 322 | ALM |
| 1.3 S T95/08/19/48 | E | 1297 | 13S | A | - | TSW | 09/86 ▸ 1991 | 1302057 | 883880 | 525 322 | ALM |
| 1.3 S E84/953/954/95B | E | 1297 | 13S | A | | TSW | 08/84 ▸ 1986 | 1302057 | 883880 | 525 322 | ALM |
| 1.3 S E83/953/954/95B ; E84/953/954/95B ; T95/08 19/35/48 ▸ L2538336, L5053351 | E | 1297 | 13S | A | - | TSW | 08/84 ▸ 1991 | 1302074 | 883857 | 530 285 | ALM |
| 1.4 S TC448 ; T34/08/19/48/67 LB524411, L2538337 ▸ | E | 1389 | 14NV | M | - | TSW | 09/89 ▸ | 1300126 | 730125 | 635 322 | ALM |
| 1.4 S,1.4 i T34/08/19/35/48/67 TC4/19/48 | E | 1389 | 14NV,C14NZ | M | - | TSW | 09/89 ▸ 1991 | 1302057 | 883880 | 525 322 | ALM |
| 1.4 S,1.4 i TC448 ; T34/08/19/48 67 ▸ L2358336, LB524410 | E | 1389 | 14NV,C14NZ | M | - | TSW | 09/89 ▸ 1990 | 1302074 | 883857 | 530 285 | ALM |
| 1.6 S,1.6 i TU4/08/19/35/48/67 GT ; TU8/08/19/35/48 | E | 1598 | 16SV,C16LZ,C16NZ,E16NZ | M | - | TSW | > ▸ 08/91 | 1300100 | 883881 | 525 322 | ALM |
| 1.6 S,1.6 i E83/443/444/44B/483 484/48B ; TU435 ; TU835 ; E84/433/443/444 44B/483/484/48B/4CR | E | 1598 | 16S-OHC,16SV,E16NZ | M | - | TSW | 08/84 ▸ 03/89 | 1302029 | 883858 | 630 322 | ALM |
| 1.6 i | E | 1598 | C16NZ | M | - | TSW | 09/86 ▸ 02/91 | 1300277 | •735083 | 650 414,5 | ALB |
| 1.6 S TU4/08/19/48/67/GT ; TU8/08/19/48 | E | 1598 | 16SV,C16LZ | M | | TSW | 09/86 ▸ 03/89 | 1302029 | 883858 | 630 322 | ALM |
| 1.6,1.6 S,1.6 i TU3/19 ; TU5/08/19 48/GT L258337, L5053352 ▸ | E | 1598 | 16SV,C16NZ | A | - | TSW | > ▸ | 1300100 | 883881 | 525 322 | ALM |
| 1.6,1.6 i TU319 | E | 1598 | 16SV,C16NZ | A | | TSW | 09/86 ▸ 03/89 | 1302029 | 883858 | 630 322 | ALM |
| 1.6 TU3/08/48 | E | 1598 | 16SV | M | - | TSW | 04/89 ▸ 1991 | 1300100 | 883881 | 525 322 | ALM |
| 1.6 TU3/08/48 | E | 1598 | 16SV | M | | TSW | 01/89 ▸ 03/89 | 1302029 | 883858 | 630 322 | ALM |
| 1.6,1.6 i ▸ L2538336 | E | 1598 | 16SV,C16NZ | A | - | TSW | 09/86 ▸ 1990 | 1302077 | 883858 | 630 322 | ALM |

Radiator Ψυγείο Vodní chladič Radiator vízhűtő Радиатор Radiador Radiator Radyatör Radiator Radiatore di raffreddamento Motorkühler Radiateur Radiator



• **New** Nouveau **Nuevo** Novo **Nuovo** Nieuw **Neu** Nowość **Yeni** Новый Νέο **Nový**

# OPEL (.../...)

## KADETT E (84>91) (.../...)

| | | | | | | | | | | | | |
|---|---|---|---|---|---|---|---|---|---|---|---|---|
| 1.6 S | TU4/08/19/48/67/GT ; TU8/08/19/48 ▸ L5053351, L2538336 | E | 1598 | 16SV,C16LZ | M | - | TSW | 09/86 ▸ 1990 | 1302077 | **883858** | 630 322 | ALM |
| 1.6 | TU3/08/48 ▸ L5053351, LB524410 | E | 1598 | 16SV | M | - | TSW | 01/89 ▸ 1990 | 1302077 | **883858** | 630 322 | ALM |
| 1.8 E,1.8 i | E82/W34 ; TW3/08/19 48/T19/T35/T48 | E | 1796 | 18E,18SE | M | + | TSW | 08/84 ▸ 1991 | 1300126 | **730125** | 635 322 | ALM |
| 1.8,1.8 E,1.8 i | E82/W34 ; TW3/08/19 48/T08/T19/T35/T48 | E | 1796 | 18E,18SE,S18NV | M | - | TSW | 08/84 ▸ 1991 | 1302029 | **883858** | 630 322 | ALM |
| 1.8 i | TW3T08 | E | 1796 | 18SE | M | - | TSW | 07/89 ▸ 1991 | 1300126 | **730125** | 635 322 | ALM |
| 1.8 i | | E | 1796 | C18NE | A | + | TSW | 09/86 ▸ 1991 | 1300126 | **730125** | 635 322 | ALM |
| 1.8 i | | E | 1796 | C18NE | A | - | TSW | 09/86 ▸ 1991 | 1302029 | **883858** | 630 322 | ALM |
| 2.0 i | TB367 ; TK308 | E | 1998 | 20NE,20SEH | M | + | TSW | 09/86 ▸ 1991 | 1300126 | **730125** | 635 322 | ALM |
| 2.0 i | TB367 ; TK308 | E | 1998 | 20NE,20SEH | M | - | TSW | 09/86 ▸ 1991 | 1302029 | **883858** | 630 322 | ALM |
| 2.0 i | TD367 ; TK348 | E | 1998 | 20SEH,C20NE | M | - | TSW | 09/86 ▸ 1991 | 1300126 | **730125** | 635 322 | ALM |
| 2.0 i 16V | TH3/08/48 | E | 1998 | 20XE,C20XE | M | - | TSW | 09/86 ▸ 1991 | 1300124 | **731217** | 520 370 | CBS |
| 1.5 TD | TG4/08/19/35/48 | D | 1488 | TC4EC1 | M | - | TSW 820037 | 1988 ▸ 1991 | 1300103 | **731022** | 540 377,5 | ALM |
| 1.6 D | E83/T43/T44/T83/T84/TT4 ; E84/T43/T44/T4B T83/T84/T8B ; TT4/08/19/35/48 ; TT8/08/19/35 48 | D | 1598 | 16D | M | - | TSW | 08/84 ▸ 12/88 | 1300126 | **730125** | 635 322 | ALM |
| 1.6 D | TT4/08/19/35/48 ; TT8/08/19/35/48 | D | 1598 | 16D | M | - | TSW | 1989 ▸ 1989 | 1300050 | **731217** | 520 370 | CBS |
| 1.6 D | TT535 ; E83/T53/T54 | D | 1598 | 16D | A | - | TSW | 08/84 ▸ 1989 | 1300126 | **730125** | 635 322 | ALM |
| 1.6 D | E84/T53/T54/T5B ; TT5/08/19/48 | D | 1598 | 16D | A | - | | 08/84 ▸ 1989 | 1302028 | | 630 316 | CBS |
| 1.7 D | TF4/08/19/35 | D | 1699 | 17DV | M | - | TSW | 01/89 ▸ 1991 | 1300124 | **731217** | 520 370 | CBS |

## MANTA B (75>88)

| | | | | | | | | | | | | |
|---|---|---|---|---|---|---|---|---|---|---|---|---|
| 1200 N,1200 S | | E | 1196 | 12N,12S | M | - | | 08/75 ▸ 07/79 | 1302095 | | 325 383 | CBS |
| 1300 N,1300 S | 582984 ; 532/984 M98/53/55/58/59/B53/B58 | E | 1297 | 13N,13S | M | - | | 03/79 ▸ 07/86 | 1302164 | | 325 383 | CBS |
| 2.0 S | MB453 ; MB853 | E | 1979 | 20S | M | - | | 12/77 ▸ 07/84 | 1302121 | | 354 452,5 | CBS |
| 2.0 S | MB553 | E | 1979 | 20S | A | - | | 12/77 ▸ | 1302119 | | 354 452,5 | CBS |

## MERIVA

| | | | | | | | | | | | | |
|---|---|---|---|---|---|---|---|---|---|---|---|---|
| 1.4 i Twinport 16V | | E | 1364 | Z14XEP | M | +/- | | 09/04 ▸ 05/10 | 1300252 | **734384** | 608 375 | |
| 1.6 i,1.6 i 16V | | E | 1598 | Z16SE/E4,Z16XE | M | + | | 05/03 ▸ 08/04 | 1300252 | **734384** | 608 375 | |
| 1.6 i,1.6 i 16V | | E | 1598 | Z16SE/E4,Z16XE | M | - | | 05/03 ▸ 08/04 | 1300253 | **734384** | 608 375 | |
| 1.8 i 16V | | E | 1796 | Z18XE | M | + | | 05/03 ▸ 04/09 | 1300252 | **734384** | 608 375 | |
| 1.8 i 16V | | E | 1796 | Z18XE | M | - | | 05/03 ▸ 04/09 | 1300253 | **734384** | 608 375 | |
| 1.3 CDTi,1.3 CDTi 16V | | D | 1248 | Y13DT,Z13DT,Z13DTJ | M | +/- | | 08/03 ▸ 07/10 | 1300260 | **734386** | 600 370 | |
| 1.7 DTi 16V | | D | 1686 | Y17DT | M | +/- | | 05/03 ▸ 04/05 | 1300254 | **734385** | 607 370 | |
| 1.7 CDTi 16V | | D | 1686 | Z17DTH | M | +/- | | 08/03 ▸ 10/09 | 1300260 | **734386** | 600 370 | |

## MONTEREY (91>98)

| | | | | | | | | | | | | |
|---|---|---|---|---|---|---|---|---|---|---|---|---|
| 3.2 i V6 24V | UBS25D | E | 3165 | 6VDI | M | | | 04/92 ▸ 06/98 | 1300137 | | | |
| 3.2 i V6 24V | UBS/25D/25G | E | 3165 | 6VDI | A | | | 04/92 ▸ 06/98 | 1300137 | | | |

## MOVANO (2006>)

| | | | | | | | | | | | | |
|---|---|---|---|---|---|---|---|---|---|---|---|---|
| 2.5 CDTi 16V | ED0/1/2/Y ; FD0/1/2 3/Y ; HD0/1/2/Y ; JD0/1/Y ; UD0/1/2/Y | D | 2464 | G9U.6.50 | M | + | TSW | 10/06 ▸ | 4415068 | **732919** | 730 414,5 | ALB |
| 2.5 CDTi 16V | FD02 ; HD02 ; UD02 ED0/2 | D | 2464 | G9U.6.50 | M | +/- | TSW | 10/06 ▸ | 4415066 | **732919** | 730 414,5 | ALB |
| 2.5 CDTi 16V | ED0/1/2/Y ; FD0/1/2 3/Y ; HD0/1/2/Y ; JD0/1/Y ; UD0/1/2/Y | D | 2464 | G9U.6.50 | M | - | TSW | 10/06 ▸ | 4415064 | **732917** | 730 414,5 | ALM |

## OMEGA B (94>)

| | | | | | | | | | | | | |
|---|---|---|---|---|---|---|---|---|---|---|---|---|
| 2.0 i,2.0 i 16V | M35 ; VBP406 ; F35/ VBW/406/469 | E | 1998 | 20SE,X20SE,X20XEV | M | + | TSW | 02/94 ▸ 07/03 | 6302007 | **731840** | 655 464 | CBS |
| 2.0 i,2.0 i 16V | M35 ; VBP406 ; F35/ VBW/406/469 | E | 1998 | 20SE,X20SE,X20XEV | M | - | TSW | 02/94 ▸ 07/03 | 6302008 | **731839** | 535 370 | ALB |
| 2.0 i,2.0 i 16V | VBP606 ; M35/ ; VBW 606/669 | E | 1998 | 20SE,X20SE,X20XEV | A | +/- | TSW | 02/94 ▸ 07/03 | 52463043 | **731839** | 535 370 | ALB |
| 2.0 i,2.0 i 16V | VBP606 ; M35/ ; VBW 606/669 | E | 1998 | 20SE,X20SE,X20XEV | A | + | TSW | 02/94 ▸ 07/03 | 6302007 | **731840** | 655 464 | CBS |
| 2.0 i,2.0 i 16V | VBP606 ; M35/ ; VBW 606/669 | E | 1998 | 20SE,X20SE,X20XEV | A | - | TSW | 02/94 ▸ 07/03 | 6302008 | **731839** | 535 370 | ALB |
| 2.0 i 16V | M35 | E | 1998 | X20XEV | A | - | TSW | 07/97 ▸ 08/99 | 6302007 | **731840** | 655 464 | CBS |
| 2.2 i 16V | | E | 2198 | Z22XE | M | +/- | TSW | 08/99 ▸ 07/03 | 6302007 | **731840** | 655 464 | CBS |
| 2.2 i 16V | | E | 2198 | Z22XE | A | + | TSW | 08/99 ▸ 07/03 | 6302007 | **731840** | 655 464 | CBS |
| 2.2 i 16V | ▸ Y1999999 | E | 2198 | Z22XE | A | - | TSW | 08/99 ▸ 06/00 | 6302007 | **731840** | 655 464 | CBS |
| 2.5 i V6 24V | M35 ; VBY406 | E | 2498 | X25XE-170 | M | - | TSW | 02/94 ▸ 06/95 | 6302007 | **731840** | 655 464 | CBS |

# OPEL (.../...)

## OMEGA B (94>) (.../...)

| Type Ctr. | | CC | | AC | | | OE | Valeo | DIM. | TECH |
|---|---|---|---|---|---|---|---|---|---|---|
| 2.5 i V6 24V M35 ; VBY406 | E | 2498 | X25XE-170 | M | - | | 07/95 ▸ | 1300165 | **735065** | 653 445 | ALB |
| T1000001 ▸ | | | | | | | | | | |
| 2.5 i V6 24V M35 ; VBY606 | E | 2498 | X25XE-170 | A | - | TSW | 02/94 ▸ 07/03 | 6302007 | **731840** | 655 464 | CBS |
| 3.0 i V6 24V M35 ; VBZ406 | E | 2962 | X30XE | M | - | TSW | 02/94 ▸ 06/95 | 6302007 | **731840** | 655 464 | CBS |
| 3.0 i V6 24V M35 ; VBZ406 | E | 2962 | X30XE | M | - | | 07/95 ▸ | 1300165 | **735065** | 653 445 | ALB |
| 3.0 i V6 24V M35/ ; VBZ/606/6E0 | E | 2962 | X30XE | A | - | TSW | 02/94 ▸ 07/03 | 6302007 | **731840** | 655 464 | CBS |
| 2.0 DTi 16V | D | 1995 | X20DTH | M | | | 09/97 ▸ 09/00 | 1300194 | | 655 370 | ALB |
| 2.2 DTi 16V | D | 2171 | Y22DTH(120) | M | +/- | | 09/00 ▸ 07/03 | 1300194 | | 655 370 | ALB |
| 2.2 DTi 16V | D | 2171 | Y22DTH(120) | M | - | | 09/00 ▸ 07/03 | 1300194 | | 655 370 | ALB |
| 2.5 TD M35/ ; VB9/406/469 | D | 2497 | U25TD,X25TD | M | + | TSW | 02/94 ▸ 07/03 | 6302004 | **731843** | 653 460 | ALB |
| 2.5 TD M35/ ; VB9/406/606 669 | D | 2497 | U25TD,X25TD | A | + | TSW | 02/94 ▸ 07/03 | 6302004 | **731843** | 653 460 | ALB |

## SENATOR B (87>93)

| | | | | | | | | | | |
|---|---|---|---|---|---|---|---|---|---|---|
| 2.5 i VJ419 | E | 2490 | 25NE | M | | | 02/87 ▸ 08/90 | 1300129 | | 562 475 | CBS |
| 2.5 i VJ6/19 ; VJA/601/619 | E | 2490 | 25NE | A | | | 02/87 ▸ 08/90 | 1300129 | | 562 475 | CBS |
| 2.6 i VP19L | E | 2594 | C26NE | M | | | 08/90 ▸ 06/93 | 1300129 | | 562 475 | CBS |
| 2.6 i VP19LA | E | 2594 | C26NE | A | | | 08/90 ▸ 06/93 | 1300129 | | 562 475 | CBS |
| 3.0 i,3.0 i 24V VNA419 ; VQ419 VSR419 ; VN4/19 | E | 2968 | 30NE,C30LE,C30NE,C30SE | M | | | 02/87 ▸ 06/93 | 1300129 | | 562 475 | CBS |
| 3.0 i,3.0 i 24V VNA619 ; VQ619 ; VN6 19 ; VSR/061/619 | E | 2968 | 30NE,C30LE,C30NE,C30SE | A | | | 02/87 ▸ 06/93 | 1300129 | | 562 475 | CBS |
| 3.0 i,3.0 i 24V VNA619 ; VQ619 ; VN6 19 ; VSR/061/619 | E | 2968 | 30NE,C30LE,C30NE,C30SE | A | | | 02/87 ▸ 08/93 | 1300098 | | 562 475 | CBS |

## SIGNUM

| | | | | | | | | | | |
|---|---|---|---|---|---|---|---|---|---|---|
| 1.8 i 16V ONK48 ; ONU48 | E | 1796 | Z18XE | M | | | 06/03 ▸ 09/05 | 1300244 | **732879** | 649,4 403,3 | ALM |
| 2.0 i Turbo 16V ONP48 ; ONS48 ONU48 ; ONK/48 | E | 1998 | Z20NET | M | +/- | | 06/03 ▸ 09/05 | 1300245 | **732876** | 650 414,5 | ALB |
| 2.2 DIG 16V ONP48 ; ONS48 ONU48 ; ONK/48 | E | 2198 | Z22YH | M | + | | 06/03 ▸ 09/05 | 1300246 | **732877** | 650 414,5 | ALB |
| 2.2 DIG 16V ONP48 ; ONS48 ONU48 ; ONK/48 | E | 2198 | Z22YH | M | - | | 06/03 ▸ 09/05 | 1300245 | **732876** | 650 414,5 | ALB |
| 2.2 DIG 16V ONP48 ; ONS48 ONU48 ; ONK/48 | E | 2198 | Z22YH | A | - | | 06/03 ▸ 09/05 | 1300245 | **732876** | 650 414,5 | ALB |
| 2.2 DIG 16V ONP48 ; ONS48 ONU48 ; ONK/48 | E | 2198 | Z22YH | A | | | 06/03 ▸ 09/05 | 1300247 | **732878** | 650 414,5 | ALB |
| 3.2 i V6 24V ONP48 ; ONS48 ONU48 ; ONK/48 | E | 3175 | Z32SE | M | +/- | | 06/03 ▸ 09/05 | 1300245 | **732876** | 650 414,5 | ALB |
| 3.2 i V6 24V ONP48 ; ONS48 ONU48 ; ONK/48 | E | 3175 | Z32SE | A | +/- | | 06/03 ▸ 09/05 | 1300245 | **732876** | 650 414,5 | ALB |
| 3.2 i V6 24V ONP48 ; ONS48 ONU48 ; ONK/48 | E | 3175 | Z32SE | A | | | 06/03 ▸ 09/05 | 1300247 | **732878** | 650 414,5 | ALB |
| 1.9 CDTI 16V | D | 1910 | Z19DTH | M | + | | 04/04 ▸ 09/05 | 1300264 | **734339** | 649 414,5 | ALB |
| 1.9 CDTI,1.9 CDTI 16V | D | 1910 | Z19DT,Z19DTH | M | - | | 04/04 ▸ 09/05 | 1300273 | **734339** | 649 414,5 | ALB |
| 2.0 DTi 16V ONK48 ; ONU48 | D | 1995 | Y20DTH | M | + | | 06/03 ▸ 09/05 | 1300246 | **732877** | 650 414,5 | ALB |
| 2.0 DTi 16V ONK48 ; ONU48 | D | 1995 | Y20DTH | M | - | | 06/03 ▸ 09/05 | 1300245 | **732876** | 650 414,5 | ALB |
| 2.2 DTI 16V ONP48 ; ONS48 ONU48 ; ONK/48 | D | 2171 | Y22DTR | M | + | | 06/03 ▸ 09/05 | 1300246 | **732877** | 650 414,5 | ALB |
| 2.2 DTI 16V ONP48 ; ONS48 ONU48 ; ONK/48 | D | 2171 | Y22DTR | M | - | | 06/03 ▸ 09/05 | 1300245 | **732876** | 650 414,5 | ALB |
| 2.2 DTI 16V ONP48 ; ONS48 ONU48 ; ONK/48 | D | 2171 | Y22DTR | A | - | | 06/03 ▸ 09/05 | 1300245 | **732876** | 650 414,5 | ALB |
| 2.2 DTI 16V ONP48 ; ONS48 ONU48 ; ONK/48 | D | 2171 | Y22DTR | A | | | 06/03 ▸ 09/05 | 1300247 | **732878** | 650 414,5 | ALB |
| 3.0 CDTi V6 24V ONP48 ; ONS48 ONU48 ; ONK/48 | D | 2958 | Y30DT | M | | | 06/03 ▸ 09/05 | 1300251 | **734302** | 649 414,5 | ALB |
| 3.0 CDTi V6 24V ONP48 ; ONS48 ONU48 ; ONK/48 | D | 2958 | Y30DT | A | + | | 06/03 ▸ 09/05 | 1300251 | **734302** | 649 414,5 | ALB |

## SIGNUM B (2005>)

| | | | | | | | | | | |
|---|---|---|---|---|---|---|---|---|---|---|
| 1.8 i 16V | E | 1796 | Z18XE | M | +/- | | 10/05 ▸ 11/08 | 1300244 | **732879** | 649,4 403,3 | ALM |
| 1.8 i 16V | E | 1796 | Z18XER | M | +/- | | 10/05 ▸ 11/08 | 1300284 | **734981** | 650 403 | ALM |
| 2.0 i Turbo 16V | E | 1998 | Z20NET | M | +/- | | 10/05 ▸ 11/08 | 1300245 | **732876** | 650 414,5 | ALB |
| 2.2 DIG 16V | E | 2198 | Z22YH | M | + | | 10/05 ▸ 11/08 | 1300246 | **732877** | 650 414,5 | ALB |
| 2.2 DIG 16V | E | 2198 | Z22YH | M | - | | 10/05 ▸ 11/08 | 1300245 | **732876** | 650 414,5 | ALB |
| 2.2 DIG 16V | E | 2198 | Z22YH | A | +/- | | 10/05 ▸ 11/08 | 1300247 | **732878** | 650 414,5 | ALB |
| 2.8 i V6 Turbo 24V | E | 2792 | Z28NEL,Z28NET | M | | TSW | 10/05 ▸ 12/07 | 1300277 | •**735083** | 650 414,5 | ALB |
| 2.8 i V6 Turbo 24V | E | 2792 | Z28NEL,Z28NET | A | | TSW | 10/05 ▸ 12/07 | 1300277 | •**735083** | 650 414,5 | ALB |
| 1.9 CDTI | D | 1910 | Z19DTL | M | +/- | | 10/05 ▸ 11/08 | 1300273 | **734339** | 649 414,5 | ALB |

Radiator Radiateur Motorkühler Radiatore di raffreddamento Radiator Radyatör Radiador Радиатор vízhűtő Vodní chladič Radiator Ψυγείο



• **New** Nouveau **Nuevo** Novo **Nuovo** Nieuw **Neu** Nowość **Yeni** Новый Νέο **Nový**

| Type Ctr. | | CC | | AC | | | OE | Valeo | DIM. | TECH |
|---|---|---|---|---|---|---|---|---|---|---|

# OPEL (.../...)

## SIGNUM B (2005>) (.../...)

| | | | | | | | | | | | |
|---|---|---|---|---|---|---|---|---|---|---|---|
| 1.9 CDTI 16V | | D | 1910 | Z19DTH | M | + | | 10/05 ▸ 11/08 | 1300264 | **734339** | 649 414,5 ALB |
| 1.9 CDTI,1.9 CDTI 16V | | D | 1910 | Z19DT,Z19DTH | M | - | | 10/05 ▸ 11/08 | 1300273 | **734339** | 649 414,5 ALB |
| 1.9 CDTI 16V | | D | 1910 | Z19DTH | A | | | 10/05 ▸ 11/08 | 1300412 | **734345** | 649 414,5 ALB |
| 3.0 CDTi V6 24V | | D | 2958 | Z30DT | M | +/- | | 10/05 ▸ 11/08 | 1300251 | **734302** | 649 414,5 ALB |
| 3.0 CDTi V6 24V | | D | 2958 | Z30DT | A | +/- | | 10/05 ▸ 11/08 | 1300251 | **734302** | 649 414,5 ALB |

## TIGRA (94>2003)

| | | | | | | | | | | | |
|---|---|---|---|---|---|---|---|---|---|---|---|
| 1.4 i,1.4 i 16V | F07 | E | 1389 | C14SE,X14XE | M | + | TSW | 10/94 ▸ 01/01 | 1300153 | **734271** | 680 273 ALB |
| 1.4 i 16V | F07 | E | 1389 | X14XE | M | - | TSW | 10/94 ▸ | 1300149 | **731013** | 530 285 ALM |
| 1.4 i | F07 | E | 1389 | C14SE | M | - | TSW | 08/97 ▸ 01/01 | 1300150 | **731178** | 530 285 ALM |
| 1.4 i 16V | F07 | E | 1389 | X14XE | M | | TSW | 10/94 ▸ 01/01 | 1300150 | **731178** | 530 285 ALM |
| 1.4 i 16V | F07 | E | 1389 | X14XE | A | + | TSW | 10/94 ▸ 01/01 | 1300153 | **734271** | 680 273 ALB |
| 1.4 i 16V | F07 | E | 1389 | X14XE | A | - | TSW | 10/94 ▸ 01/01 | 1300150 | **731178** | 530 285 ALM |
| 1.6 i,1.6 i 16V | F07 | E | 1598 | C16SEL,X16XE | M | + | TSW | 10/94 ▸ 01/01 | 1300153 | **734271** | 680 273 ALB |
| 1.6 i 16V | F07 | E | 1598 | X16XE | M | - | TSW | 10/94 ▸ | 1300149 | **731013** | 530 285 ALM |
| 1.6 i | F07 | E | 1598 | C16SEL | M | - | TSW | 08/97 ▸ 08/98 | 1300150 | **731178** | 530 285 ALM |
| 1.6 i 16V | F07 | E | 1598 | X16XE | M | | TSW | 10/94 ▸ 01/01 | 1300150 | **731178** | 530 285 ALM |

## TIGRA TWINTOP (2004>2008)

| | | | | | | | | | | | |
|---|---|---|---|---|---|---|---|---|---|---|---|
| 1.4 i Twinport 16V | | E | 1364 | Z14XEP | M | +/- | | 07/04 ▸ 07/08 | 1300236 | **732825** | 540 377,5 ALM |
| 1.8 i 16V<br>5E0000001 ▸ | | E | 1796 | Z18XE | M | + | | > ▸ 07/08 | 1300237 | **732826** | 540 377,5 ALM |
| 1.8 i 16V | | E | 1796 | Z18XE | M | - | | 07/04 ▸ 07/08 | 1300236 | **732825** | 540 377,5 ALM |

## TIGRA TWINTOP (2008>)

| | | | | | | | | | | | |
|---|---|---|---|---|---|---|---|---|---|---|---|
| 1.4 i Twinport 16V | | E | 1364 | Z14XEP | M | +/- | | 07/08 ▸ 08/09 | 1300236 | **732825** | 540 377,5 ALM |
| 1.8 i 16V | | E | 1796 | Z18XE | M | +/- | | 07/08 ▸ 08/09 | 1300237 | **732826** | 540 377,5 ALM |
| 1.3 CDTi 16V | | D | 1248 | Z13DT | M | + | | 07/08 ▸ 08/09 | 1300259 | **734464** | 600 350 ALM |
| 1.3 CDTi 16V | | D | 1248 | Z13DT | M | - | | 07/08 ▸ 08/09 | 1300261 | **734464** | 600 350 ALM |

## VECTRA A (88>95)

| | | | | | | | | | | | |
|---|---|---|---|---|---|---|---|---|---|---|---|
| 1.4 | JV3/419/468 | E | 1389 | 14NV | M | + | TSW | 09/88 ▸ 07/92 | 1300088 | **883878** | 525 322 ALM |
| 1.4 | JV3/419/468 | E | 1389 | 14NV | M | - | TSW | 09/88 ▸ 07/92 | 90264491 | **883877** | 525 322 ALM |
| 1.6 S,1.6 i | JV/ ; JVQ/419/468<br>JVR/419/468 ; JVU/419/468 | E | 1598 | 16SV,C16NZ,E16NZ,X16SZ | M | + | TSW | 09/88 ▸ 09/95 | 1300088 | **883878** | 525 322 ALM |
| 1.6 S,1.6 i | | E | 1598 | 16LZ2,C16NZ2 | M | + | TSW | 09/88 ▸ 09/95 | 1300133 | **731175** | 620 377,5 ALM |
| 1.6 S,1.6 i | | E | 1598 | 16LZ2,C16NZ2 | M | - | TSW | 09/88 ▸ 09/95 | 1300122 | **730395** | 540 377,5 ALM |
| 1.6 S,1.6 i | JVQ/419/468 ; JVR<br>419/468 ; JVU/419/468 | E | 1598 | 16SV,C16NZ,E16NZ | M | - | TSW | 09/88 ▸ 09/95 | 90264491 | **883877** | 525 322 ALM |
| 1.6 i | JVQ/419/468 ; JVR/419/468 | E | 1598 | C16NZ,E16NZ,X16SZ | M | | TSW | 09/88 ▸ 09/95 | 1300122 | **730395** | 540 377,5 ALM |
| 1.6 i | | E | 1598 | C16NZ2 | A | + | TSW | 09/88 ▸ 09/95 | 1300133 | **731175** | 620 377,5 ALM |
| 1.6 S,1.6 i | JVR619 ; JV/ ; JVU<br>619/668 | E | 1598 | 16SV,C16NZ,X16SZ | A | + | TSW | 09/88 ▸ 09/95 | 1300088 | **883878** | 525 322 ALM |
| 1.6 i | | E | 1598 | C16NZ2 | A | - | TSW | 09/88 ▸ 09/95 | 1300122 | **730395** | 540 377,5 ALM |
| 1.8,1.8 i<br>M1000325, M5000001 ▸ | JVT/419/468 | E | 1796 | 18SV,C18NZ,E18NVR | M | + | TSW | > ▸ 09/95 | 1300133 | **731175** | 620 377,5 ALM |
| 1.8,1.8 i | JVT/419/468 | E | 1796 | 18SV,C18NZ,E18NVR | M | - | TSW | 09/88 ▸ 09/95 | 1300122 | **730395** | 540 377,5 ALM |
| 1.8,1.8 i | JVT/419/468 | E | 1796 | C18NZ,E18NVR | M | - | TSW | 09/88 ▸ 09/95 | 1300125 | **730395** | 540 377,5 ALM |
| 1.8,1.8 i | JVT/419/468 | E | 1796 | C18NZ,E18NVR | M | - | TSW | 09/88 ▸ 09/95 | 1300084 | **730396** | 538 365 ALB |
| 1.8 i<br>M5000001, MV000001 ▸ | JVT419 | E | 1796 | C18NZ | M | | TSW | > ▸ 09/95 | 1300133 | **731175** | 620 377,5 ALM |
| 1.8,1.8 i | JVT619 | E | 1796 | 18SV,C18NZ,E18NVR | A | + | TSW | > ▸ 09/95 | 1300133 | **731175** | 620 377,5 ALM |
| 1.8,1.8 i | | E | 1796 | C18NZ,E18NVR | A | - | TSW | 09/88 ▸ 09/95 | 1300125 | **730395** | 540 377,5 ALM |
| 1.8,1.8 i | | E | 1796 | 18SV,C18NZ,E18NVR | A | - | TSW | 09/88 ▸ 09/95 | 1300122 | **730395** | 540 377,5 ALM |
| 1.8 i<br>M1000325, M5000001 ▸ | JVT619 | E | 1796 | C18NZ | A | | TSW | > ▸ 09/95 | 1300133 | **731175** | 620 377,5 ALM |
| 1.8 i<br>▸ L5999999, M1000324 | JVT619 | E | 1796 | C18NZ | A | + | TSW | 09/88 ▸ | 1300135 | **731174** | 620 377,5 ALM |
| 1.8,1.8 i<br>▸ L5999999, M1000324 | JVT/419/468 | E | 1796 | C18NZ,E18NVR | M | + | TSW | 09/88 ▸ | 1300135 | **731174** | 620 377,5 ALM |
| 1.8 i<br>▸ LV999999 | JVT619 | E | 1796 | C18NZ | A | | TSW | 09/88 ▸ | 1300135 | **731174** | 620 377,5 ALM |
| 1.8 i<br>▸ M1000324, LV999999 | JVT419 | E | 1796 | C18NZ | M | | TSW | 09/88 ▸ | 1300135 | **731174** | 620 377,5 ALM |
| 2.0 i,2.0 i 16V,2000 i<br>2000 i 16V | JV/ ; JVB/041/046<br>419/468 ; JVH319<br>JVD/041/319/419/468/668/E04/E41 ; JVJ//031<br>319 ; JVT319 ; JVK/319/368 ; JVW/031/036/041<br>319/368/468 ; JXK319 ; JXJ/031/319 | E | 1998 | 20NE,20SEH,20XE,C20NE,C20XE<br>X20XEV | M | + | TSW | 09/88 ▸ 09/95 | 1300133 | **731175** | 620 377,5 ALM |

# OPEL (.../...)

## VECTRA A (88>95) (.../...)

| Type Ctr. | | CC | | AC | | | OE | Valeo | DIM. | TECH |
|---|---|---|---|---|---|---|---|---|---|---|
| 2.0 i,2.0 i 16V,2000 i<br>2000 i 16V<br>JV/ ; JVB/041/046<br>419/468 ; JVH319<br>JVD/041/319/419/468/668/E04/E41 ; JVJ//031<br>319 ; JVT319 ; JVK/319/368 ; JVW/031/036/041<br>319/368/468 ; JXK319 ; JXJ/031/319 | E | 1998 | 20NE,20SEH,20XE,C20NE,C20XE<br>X20XEV | M | - | TSW | 09/88 ▸ 09/95 | 1300122 | **730395** | 540 377,5 | ALM |
| 2.0 i,2.0 i 16V<br>JVB/061/066/619/668<br>JVD/061/066/619/668/E06/E61 ; JVW/061/066 | E | 1998 | 20NE,C20NE,X20XEV | A | + | TSW | 09/88 ▸ 09/95 | 1300133 | **731175** | 620 377,5 | ALM |
| 2.0 i,2.0 i 16V<br>JVB/061/066/619/668<br>JVD/061/066/619/668/E06/E61 ; JVW/061/066 | E | 1998 | 20NE,C20NE,X20XEV | A | - | TSW | 09/88 ▸ 09/95 | 1300122 | **730395** | 540 377,5 | ALM |
| 2.0 i | E | 1998 | 20SEH | A | | TSW | 09/88 ▸ 07/92 | 1300133 | **731175** | 620 377,5 | ALM |
| 2.0 i<br>JVB/061/066/619/668 ; JVD/061/066/619/668<br>▸ L5999999, LV999999 | E | 1998 | 20NE,C20NE | A | + | TSW | 09/88 ▸ 1991 | 1300135 | **731174** | 620 377,5 | ALM |
| 2.0 i,2.0 i 16V,2000 i<br>2000 i 16V<br>JVB/041/046/419/468<br>JVH319 ; JVD/041<br>319/419/468/668/E04 ; JVJ//031/319 ; JVT319<br>JVW368 ; JVK/319/368 ; JXK319 ; JXJ/031/319<br>▸ L5999999, M1000324 | E | 1998 | 20NE,20SEH,20XE,C20NE,C20XE<br>X20XEV | M | + | TSW | 09/88 ▸ 1991 | 1300135 | **731174** | 620 377,5 | ALM |
| 2.5 i V6 24V<br>JVX/301/306/319 | E | 2498 | C25XE | M | +/- | | 05/93 ▸ 09/95 | 1300146 | **734604** | 617 374 | ALB |
| 2.5 i V6 24V<br>JVX/601/606 | E | 2498 | C25XE | A | +/- | | 05/93 ▸ 09/95 | 1300146 | **734604** | 617 374 | ALB |
| 1.7 TD<br>JV9/401/406/419/468 | D | 1686 | 17TD | M | +/- | TSW | 07/91 ▸ 09/95 | 1300104 | **731170** | 600 377,5 | ALM |
| 1.7 D<br>JV8/419/468 ; JVF/419/468 | D | 1699 | 17D,17DR | M | - | TSW | 09/88 ▸ 09/95 | 1300125 | **730395** | 540 377,5 | ALM |

## VECTRA B (95>99)

| | | | | | | | | | | | |
|---|---|---|---|---|---|---|---|---|---|---|---|
| 1.6 i,1.6 i 16V<br>F19 ; F68 | E | 1598 | 16LZ2,X16SZR,X16XEL | M | + | TSW | 10/95 ▸ 01/99 | 1300180 | **731847** | 628 377,5 | ALM |
| 1.6 i,1.6 i 16V<br>F19 ; F68 | E | 1598 | 16LZ2,X16SZR,X16XEL | M | - | TSW | 10/95 ▸ 01/99 | 90528302 | **731525** | 540 377 | ALM |
| 1.6 i,1.6 i 16V<br>F19 ; F68 | E | 1598 | 16LZ2,X16SZR,X16XEL | M | - | TSW | 10/95 ▸ 01/99 | 1300158 | **731393** | 540 377 | ALM |
| 1.6 i 16V | E | 1598 | X16XEL | A | + | TSW | 10/95 ▸ 01/99 | 1300160 | **731847** | 628 377,5 | ALM |
| 1.6 i 16V | E | 1598 | X16XEL | A | - | TSW | 10/95 ▸ 01/99 | 1300158 | **731393** | 540 377 | ALM |
| 1.8 i 16V<br>F19 ; F68 | E | 1799 | X18XE | M | + | TSW | 10/95 ▸ 01/99 | 1300180 | **731847** | 628 377,5 | ALM |
| 1.8 i 16V<br>F19 ; F68 | E | 1799 | X18XE | M | - | TSW | 10/95 ▸ 01/99 | 1300158 | **731393** | 540 377 | ALM |
| 1.8 i 16V<br>F19 ; F68 | E | 1799 | X18XE | M | - | TSW | 10/95 ▸ 01/99 | 90528302 | **731525** | 540 377 | ALM |
| 1.8 i 16V | E | 1799 | X18XE | A | + | TSW | 10/96 ▸ 01/99 | 1300160 | **731847** | 628 377,5 | ALM |
| 1.8 i 16V | E | 1799 | X18XE | A | - | TSW | 10/96 ▸ 01/99 | 1300158 | **731393** | 540 377 | ALM |
| 2.0 i,2.0 i 16V<br>F19 ; F68 | E | 1998 | 20NEJ,X20XEV | M | + | TSW | 10/95 ▸ 01/99 | 1300160 | **731847** | 628 377,5 | ALM |
| 2.0 i,2.0 i 16V<br>F19 ; F68 | E | 1998 | 20NEJ,X20XEV | M | - | TSW | 10/95 ▸ 01/99 | 1300158 | **731393** | 540 377 | ALM |
| 2.0 i,2.0 i 16V<br>F19 ; F68 | E | 1998 | 20NEJ,X20XEV | M | - | TSW | 10/95 ▸ 01/99 | 90528302 | **731525** | 540 377 | ALM |
| 2.0 i,2.0 i 16V<br>F19 ; F68 | E | 1998 | 20NEJ,X20XEV | A | + | TSW | 10/95 ▸ 01/99 | 1300180 | **731847** | 628 377,5 | ALM |
| 2.0 i,2.0 i 16V<br>F19 ; F68 | E | 1998 | 20NEJ,X20XEV | A | - | TSW | 10/95 ▸ 01/99 | 1300158 | **731393** | 540 377 | ALM |
| 2.5 i V6 24V<br>0JX19S ; F68 | E | 2498 | X25XE-170,X25XE-195 | M | + | TSW | 10/95 ▸ 01/99 | 1300181 | **732348** | 628 377,5 | ALM |
| 2.5 i V6 24V<br>0JX19S ; F68 | E | 2498 | X25XE-170,X25XE-195 | M | - | TSW | 10/95 ▸ 01/99 | 1300180 | **731847** | 628 377,5 | ALM |
| 2.5 i V6 24V | E | 2498 | X25XE-170 | M | - | TSW | 10/95 ▸ 01/99 | 1300182 | **731847** | 628 377,5 | ALM |
| 2.5 i V6 24V | E | 2498 | X25XE-170 | A | + | TSW | 10/95 ▸ 01/99 | 1300181 | **732348** | 628 377,5 | ALM |
| 2.5 i V6 24V | E | 2498 | X25XE-170 | A | - | TSW | 10/95 ▸ 01/99 | 1300182 | **731847** | 628 377,5 | ALM |
| 1.7 TD | D | 1686 | X17DT | M | + | | 10/95 ▸ 01/99 | 1300184 | **731846** | 500 348 | ALB |
| 1.7 TD | D | 1686 | X17DT | M | - | | 10/95 ▸ 01/99 | 1300183 | | 500 348 | ALB |
| 2.0 TDi 16V | D | 1995 | X20DTH | M | +/- | | 09/97 ▸ 01/99 | 1300178 | **732349** | 500 348 | ALB |
| 2.0 Di 16V | D | 1995 | X20DTL | M | + | TSW | 10/96 ▸ 01/99 | 1300185 | **732347** | 628 377,5 | ALM |
| 2.0 Di 16V | D | 1995 | X20DTL | M | + | | 10/96 ▸ 01/99 | 1300185 | | 628 377,5 | ALM |
| 2.0 Di 16V | D | 1995 | X20DTL | M | - | TSW | 10/96 ▸ 01/99 | 1300182 | **731847** | 628 377,5 | ALM |

## VECTRA B (99>2002)

| | | | | | | | | | | | |
|---|---|---|---|---|---|---|---|---|---|---|---|
| 1.6 i 16V<br>0JK/68I ; 0JU/19I<br>35I/68I | E | 1598 | Z16XE | M | + | TSW | 02/99 ▸ 06/03 | 1300180 | **731847** | 628 377,5 | ALM |
| 1.6 i 16V<br>0JK/68I ; 0JU/19I<br>35I/68I | E | 1598 | Z16XE | M | - | TSW | 02/99 ▸ 06/03 | 90528302 | **731525** | 540 377 | ALM |
| 1.6 i 16V<br>0JK/68I ; 0JU/19I<br>35I/68I | E | 1598 | Z16XE | M | | TSW | 02/99 ▸ 06/03 | 1300158 | **731393** | 540 377 | ALM |
| 1.6 i 16V<br>0JU/19I/35I/68I | E | 1598 | Z16XE | A | + | TSW | 02/99 ▸ 06/03 | 1300180 | **731847** | 628 377,5 | ALM |
| 1.6 i 16V<br>0JU/19I/35I/68I | E | 1598 | Z16XE | A | - | TSW | 02/99 ▸ 06/03 | 1300158 | **731393** | 540 377 | ALM |
| 1.8 i 16V<br>0JU/19K/35K/68K<br>0JX/19K/35K/68K | E | 1796 | Z18XE | M | + | TSW | 02/99 ▸ 06/03 | 1300180 | **731847** | 628 377,5 | ALM |
| 1.8 i 16V<br>0JU/19K/35K/68K<br>0JX/19K/35K/68K | E | 1796 | Z18XE | M | - | TSW | 02/99 ▸ 06/03 | 1300158 | **731393** | 540 377 | ALM |
| 1.8 i 16V<br>0JU/19K/35K/68K<br>0JX/19K/35K/68K | E | 1796 | Z18XE | M | - | TSW | 02/99 ▸ 06/03 | 90528302 | **731525** | 540 377 | ALM |
| 1.8 i 16V<br>0JU/19K/35K/68K<br>0JX/19K/35K/68K | E | 1796 | Z18XE | A | + | TSW | 02/99 ▸ 06/03 | 1300180 | **731847** | 628 377,5 | ALM |
| 1.8 i 16V<br>0JU/19K/35K/68K<br>0JX/19K/35K/68K | E | 1796 | Z18XE | A | - | TSW | 02/99 ▸ 06/03 | 1300158 | **731393** | 540 377 | ALM |

Radiator Radiateur Motorkühler Radiatore di raffreddamento Radiator Radyatör Radiador Радиатор vízhűtő Vodní chladič Radiator Ψυγείο



• **New** Nouveau **Nuevo** Novo **Nuovo** Nieuw **Neu** Nowość **Yeni** Новый Νέο **Nový**

# OPEL (.../...)

## VECTRA B (99>2002) (.../...)

| Type Ctr. | | CC | | | AC | | | OE | Valeo | DIM. | TECH |
|---|---|---|---|---|---|---|---|---|---|---|---|
| 2.2 i 16V | 0JU/19P/35P/68P 0JX/19P/35P/68P | E | 2198 | Z22SE | M | + | | 02/99 ▸ 06/03 | 1300240 | | 628 377,5 | ALM |
| 2.2 i 16V | 0JU/19P/35P/68P 0JX/19P/35P/68P | E | 2198 | Z22SE | M | - | TSW | 02/99 ▸ 06/03 | 1300221 | **731393** | 540 377 | ALM |
| 2.2 i 16V | 0JU/19P/35P/68P 0JX/19P/35P/68P | E | 2198 | Z22SE | A | + | | 02/99 ▸ 06/03 | 1300240 | | 628 377,5 | ALM |
| 2.2 i 16V | 0JU/19P/35P/68P 0JX/19P/35P/68P | E | 2198 | Z22SE | A | - | TSW | 02/99 ▸ 06/03 | 1300221 | **731393** | 540 377 | ALM |
| 2.6 i V6 24V | 0JU/19T/35T/68T 0JX/19T/35T/68T | E | 2597 | Y26SE | M | + | TSW | 09/00 ▸ 06/03 | 1300181 | **732348** | 628 377,5 | ALM |
| 2.6 i V6 24V | 0JU/19T/35T/68T 0JX/19T/35T/68T | E | 2597 | Y26SE | M | - | TSW | 09/00 ▸ | 1300182 | **731847** | 628 377,5 | ALM |
| 2.6 i V6 24V | 0JU/19T/35T/68T 0JX/19T/35T/68T | E | 2597 | Y26SE | M | - | TSW | 09/00 ▸ 06/03 | 1300180 | **731847** | 628 377,5 | ALM |
| 2.6 i V6 24V | 0JU/19T/35T/68T 0JX/19T/35T/68T | E | 2597 | Y26SE | A | + | TSW | 09/00 ▸ 06/03 | 1300181 | **732348** | 628 377,5 | ALM |
| 2.6 i V6 24V | 0JU/19T/35T/68T 0JX/19T/35T/68T | E | 2597 | Y26SE | A | - | TSW | 09/00 ▸ | 1300182 | **731847** | 628 377,5 | ALM |
| 2.6 i V6 24V | 0JU/19T/35T/68T 0JX/19T/35T/68T | E | 2597 | Y26SE | A | - | TSW | 09/00 ▸ 06/03 | 1300180 | **731847** | 628 377,5 | ALM |
| 2.0 DTi 16V | 0JK/68M ; 0JU/19M 35M/68M ; 0JX/19M/35M/68M | D | 1995 | Y20DTH | M | +/- | | 02/99 ▸ 06/03 | 1300178 | **732349** | 500 348 | ALB |
| 2.2 DTI 16V | 0JU/19P/35P/68P 0JX/19P/35P/68P | D | 2171 | Y22DTR | M | +/- | | 09/00 ▸ 06/03 | 1300242 | | 628 377,5 | ALM |

## VECTRA C (2002>2005)

| | | | | | | | | | | | |
|---|---|---|---|---|---|---|---|---|---|---|---|
| 1.8 i GPL 16V | | G | 1796 | Z18GPL | M | | | 04/02 ▸ 09/05 | 1300244 | **732879** | 649,4 403,3 | ALM |
| 1.6 i 16V | | E | 1598 | Z16XE | M | +/- | | 04/04 ▸ 09/05 | 1300244 | **732879** | 649,4 403,3 | ALM |
| 1.6 i 16V | | E | 1598 | Z16XEP | M | +/- | | 04/04 ▸ 09/05 | 1300283 | **734982** | 650 403 | ALM |
| 1.8 i 16V | 0JK69K ; 0JU69K 0JV68 ; JV6/8KE | E | 1796 | Z18XE,Z18XEL | M | +/- | | 04/02 ▸ 09/05 | 1300244 | **732879** | 649,4 403,3 | ALM |
| 1.8 i 16V | | E | 1796 | Z18XER | M | +/- | | 04/02 ▸ 09/05 | 1300284 | **734981** | 650 403 | ALM |
| 1.8 i 16V | JK35KE ; JW68KE | E | 1796 | Z18XE | M | | | 06/02 ▸ 09/05 | 1300244 | **732879** | 649,4 403,3 | ALM |
| 1.8 i 16V | JK35 | E | 1796 | Z18XE | A | | | 07/03 ▸ 09/05 | 1300244 | **732879** | 649,4 403,3 | ALM |
| 2.0 i Turbo 16V | JS35MY ; JW68MY | E | 1998 | Z20NET | M | +/- | | 03/03 ▸ 09/05 | 1300245 | **732876** | 650 414,5 | ALB |
| 2.2 DIG 16V,2.2 i 16V | JW68P1 ; 0JK69P 0JU69P ; JU3/5P3 | E | 2198 | Z22SE,Z22YH | M | + | | 04/02 ▸ 09/05 | 1300246 | **732877** | 650 414,5 | ALB |
| 2.2 DIG 16V,2.2 i 16V | JW68P1 ; 0JK69P 0JU69P ; JU3/5P3 | E | 2198 | Z22SE,Z22YH | M | - | | 04/02 ▸ 09/05 | 1300245 | **732876** | 650 414,5 | ALB |
| 2.2 DIG 16V,2.2 i 16V | JW68P1 ; 0JK69P 0JU69P ; JU3/5P2 | E | 2198 | Z22SE,Z22YH | A | +/- | | 04/02 ▸ 09/05 | 1300247 | **732878** | 650 414,5 | ALB |
| 3.2 i V6 24V | 0JV/35Z/68Z | E | 3175 | Z32SE | M | +/- | | 06/02 ▸ 09/05 | 1300245 | **732876** | 650 414,5 | ALB |
| 3.2 i V6 24V | 0JV68Z | E | 3175 | Z32SE | M | + | | 06/02 ▸ 09/05 | 1300246 | **732877** | 650 414,5 | ALB |
| 3.2 i V6 24V | 0JV/35Z/68Z | E | 3175 | Z32SE | A | +/- | | 06/02 ▸ 09/05 | 1300247 | **732878** | 650 414,5 | ALB |
| 1.9 CDTI 16V | | D | 1910 | Z19DTH | M | + | | 04/04 ▸ 09/05 | 1300264 | **734339** | 649 414,5 | ALB |
| 1.9 CDTI | | D | 1910 | Z19DT | M | + | | 04/04 ▸ 09/05 | 1300273 | **734339** | 649 414,5 | ALB |
| 1.9 CDTI 16V | | D | 1910 | Z19DTH | M | - | | 04/04 ▸ 09/05 | 1300273 | **734339** | 649 414,5 | ALB |
| 1.9 CDTI | | D | 1910 | Z19DT | M | | | 04/04 ▸ 09/05 | 1300264 | **734339** | 649 414,5 | ALB |
| 1.9 CDTI 16V | | D | 1910 | Z19DTH | A | +/- | | 04/04 ▸ 09/05 | 1300412 | **734345** | 649 414,5 | ALB |
| 2.0 DTi 16V | JK35MV ; JV68 ; 0J 0JK69M ; 0JU69M ; JK | D | 1995 | Y20DTH | M | + | | 04/02 ▸ 03/05 | 1300246 | **732877** | 650 414,5 | ALB |
| 2.0 DTi 16V | JK35MV ; JV68 ; 0J 0JK69M ; 0JU69M ; JK | D | 1995 | Y20DTH | M | - | | 04/02 ▸ 03/05 | 1300245 | **732876** | 650 414,5 | ALB |
| 2.2 DTI 16V | JS35PP ; JU35PP JV68PP ; JW68PP ; 0JK69P ; 0JU69P ; 0JV68 JK3/5PP | D | 2171 | Y22DTR | M | + | | 04/02 ▸ 09/05 | 1300246 | **732877** | 650 414,5 | ALB |
| 2.2 DTI 16V | JS35PP ; JU35PP JV68PP ; JW68PP ; 0JK69P ; 0JU69P ; 0JV68 JK3/5PP | D | 2171 | Y22DTR | M | - | | 04/02 ▸ 09/05 | 1300245 | **732876** | 650 414,5 | ALB |
| 2.2 DTI 16V | JS35PP ; JU35PP JV68PP ; JW68PP ; 0JK69P ; 0JU69P ; JK3/5PP | D | 2171 | Y22DTR | A | +/- | | 04/02 ▸ 09/05 | 1300247 | **732878** | 650 414,5 | ALB |
| 3.0 CDTI V6 24V | JU35XG ; JU69XG JW68XH ; JS3/5XG | D | 2958 | Y30DT | M | + | | 06/03 ▸ 09/05 | 1300251 | **734302** | 649 414,5 | ALB |
| 3.0 CDTI V6 24V | JU35XH ; JU69XH JW68XH ; JS3/5XH | D | 2958 | Y30DT | A | + | | 06/03 ▸ 09/05 | 1300251 | **734302** | 649 414,5 | ALB |

## VECTRA C (2005>)

| | | | | | | | | | | | |
|---|---|---|---|---|---|---|---|---|---|---|---|
| 1.6 i 16V | | E | 1598 | Z16XE | M | +/- | | 10/05 ▸ 02/09 | 1300244 | **732879** | 649,4 403,3 | ALM |
| 1.6 i 16V | | E | 1598 | Z16XEP | M | +/- | | 01/06 ▸ 02/09 | 1300283 | **734982** | 650 403 | ALM |
| 1.6 i 16V | | E | 1598 | Z16XE | M | | | 10/05 ▸ 02/09 | 1300283 | **734982** | 650 403 | ALM |

# OPEL (.../...)

## VECTRA C (2005>) (.../...)

| | | CC | | | AC | | | OE | Valeo | DIM. | TECH |
|---|---|---|---|---|---|---|---|---|---|---|---|
| 1.8 i 16V | E | 1796 | Z18XE,Z18XER | M | +/- | | 10/05 ▸ 02/09 | 1300284 | **734981** | 650 403 | ALM |
| 1.8 i 16V | E | 1796 | Z18XE | M | | | 10/05 ▸ 02/09 | 1300244 | **732879** | 649,4 403,3 | ALM |
| 1.8 i 16V | E | 1796 | Z18XER | M | | | 10/05 ▸ 02/09 | 1300284 | **734981** | 650 403 | ALM |
| 2.0 i Turbo 16V | E | 1998 | Z20NET | M | +/- | | 10/05 ▸ 02/09 | 1300245 | **732876** | 650 414,5 | ALB |
| 2.2 DIG 16V | E | 2198 | Z22YH | M | + | | 10/05 ▸ 02/09 | 1300246 | **732877** | 650 414,5 | ALB |
| 2.2 DIG 16V | E | 2198 | Z22YH | M | - | | 10/05 ▸ 02/09 | 1300245 | **732876** | 650 414,5 | ALB |
| 2.2 DIG 16V | E | 2198 | Z22YH | A | +/- | | 10/05 ▸ 02/09 | 1300247 | **732878** | 650 414,5 | ALB |
| 2.2 DIG 16V | E | 2198 | Z22YH | A | | | 10/05 ▸ 02/09 | 1300245 | **732876** | 650 414,5 | ALB |
| 2.8 i V6 Turbo 24V | E | 2792 | Z28NEL,Z28NET | M | +/- | TSW | 10/05 ▸ 02/09 | 1300277 | •**735083** | 650 414,5 | ALB |
| 2.8 i V6 Turbo 24V | E | 2792 | Z28NET | M | | TSW | 09/06 ▸ 02/09 | 1300277 | •**735083** | 650 414,5 | ALB |
| 2.8 i V6 Turbo 24V | E | 2792 | Z28NEL,Z28NET | A | +/- | TSW | 10/05 ▸ 02/09 | 1300277 | •**735083** | 650 414,5 | ALB |
| 2.8 i V6 Turbo 24V | E | 2792 | Z28NET | A | | TSW | 09/06 ▸ 02/09 | 1300277 | •**735083** | 650 414,5 | ALB |
| 1.9 CDTI | D | 1910 | Z19DTL | M | +/- | | 10/05 ▸ 02/09 | 1300273 | **734339** | 649 414,5 | ALB |
| 1.9 CDTI | D | 1910 | Z19DT | M | + | | 10/05 ▸ 02/09 | 1300273 | **734339** | 649 414,5 | ALB |
| 1.9 CDTI 16V | D | 1910 | Z19DTH | M | + | | 10/05 ▸ 02/09 | 1300264 | **734339** | 649 414,5 | ALB |
| 1.9 CDTI 16V | D | 1910 | Z19DTH | M | - | | 10/05 ▸ 02/09 | 1300273 | **734339** | 649 414,5 | ALB |
| 1.9 CDTI 16V | D | 1910 | Z19DTH | A | + | | 10/05 ▸ 02/09 | 1300412 | **734345** | 649 414,5 | ALB |
| 3.0 CDTI V6 24V | D | 2958 | Z30DT | M | | | 10/05 ▸ 02/09 | 1300251 | **734302** | 649 414,5 | ALB |
| 3.0 CDTI V6 24V | D | 2958 | Z30DT | A | | | 10/05 ▸ 02/09 | 1300251 | **734302** | 649 414,5 | ALB |

## ZAFIRA (98>2003)

| | | | | | | | | | | | |
|---|---|---|---|---|---|---|---|---|---|---|---|
| 1.6 i 16V WOLOTG | E | 1598 | X16XEL,Z16XE,Z16XE/D3 | M | + | | 01/99 ▸ 06/03 | 1300257 | **732549** | 610 377,5 | ALM |
| 1.6 i 16V WOLOTG | E | 1598 | X16XEL,Z16XE,Z16XE/D3 | M | - | | 01/99 ▸ 06/03 | 90570725 | **732724** | 540 377,5 | ALM |
| 1.6 i 16V WOLOTG<br>Y5291301, Y8144151 ▸ | E | 1598 | X16XEL | M | | | 2000 ▸ | | **732729** | 610 377,5 | ALM |
| 1.6 i 16V WOLOTG<br>Y2279350 ▸ | E | 1598 | X16XEL | M | | | 2000 ▸ 06/03 | 93277988 | **732795** | 540 377,5 | ALM |
| 1.6 i 16V WOLOTG | E | 1598 | X16XEL,Z16XE | A | +/- | | 01/99 ▸ 06/03 | 90570725 | **732724** | 540 377,5 | ALM |
| 1.6 i 16V WOLOTG | E | 1598 | X16XEL,Z16XE | A | + | | 01/99 ▸ 06/03 | 1300257 | **732549** | 610 377,5 | ALM |
| 1.6 i 16V WOLOTG | E | 1598 | X16XEL,Z16XE | A | - | | 01/99 ▸ 06/03 | 1300213 | **732724** | 540 377,5 | ALM |
| 1.6 i 16V WOLOTG<br>▸ Y5291300, Y2279349 | E | 1598 | X16XEL,Z16XE,Z16XE/D3 | M | + | | 01/99 ▸ | 1300196 | **732549** | 610 377,5 | ALM |
| 1.6 i 16V WOLOTG<br>▸ Y5291300, Y8144150 | E | 1598 | X16XEL,Z16XE,Z16XE/D3 | M | + | | 01/99 ▸ | 1300214 | **732549** | 610 377,5 | ALM |
| 1.6 i 16V WOLOTG<br>▸ Y5291300, Y8144150 | E | 1598 | X16XEL | A | + | | 01/99 ▸ 2000 | 1300196 | **732549** | 610 377,5 | ALM |
| 1.6 i 16V WOLOTG<br>▸ Y5291300, Y8144150 | E | 1598 | X16XEL,Z16XE,Z16XE/D3 | M | - | | 01/99 ▸ 2000 | 1300187 | **732724** | 540 377,5 | ALM |
| 1.6 i 16V WOLOTG<br>Y2281475, Y8144151 ▸ Y6129876, Y5291300 | E | 1598 | X16XEL,Z16XE | A | + | | 01/99 ▸ | 1300214 | **732549** | 610 377,5 | ALM |
| 1.6 i 16V WOLOTG<br>▸ Y6132349, Y8144150 | E | 1598 | X16XEL | A | - | | 01/99 ▸ 2000 | 1300187 | **732724** | 540 377,5 | ALM |
| 1.8 i 16V WOLOTG | E | 1796 | X18XE1,Z18XE | M | + | | 01/99 ▸ 06/03 | 1300257 | **732549** | 610 377,5 | ALM |
| 1.8 i 16V WOLOTG | E | 1796 | X18XE1,Z18XE | M | - | | 01/99 ▸ 06/03 | 1300213 | **732724** | 540 377,5 | ALM |
| 1.8 i 16V WOLOTG<br>Y5291301, Y8144151 ▸ | E | 1796 | X18XE1 | M | | | 2000 ▸ 09/00 | 93277988 | **732795** | 540 377,5 | ALM |
| 1.8 i 16V WOLOTG<br>Y6129877, Y8144151 ▸ | E | 1796 | X18XE1 | M | | | 2000 ▸ | | **732729** | 610 377,5 | ALM |
| 1.8 i 16V WOLOTG | E | 1796 | X18XE1,Z18XE | A | +/- | | 01/99 ▸ 06/03 | 90570725 | **732724** | 540 377,5 | ALM |
| 1.8 i 16V WOLOTG | E | 1796 | X18XE1,Z18XE | A | + | | 01/99 ▸ 06/03 | 1300257 | **732549** | 610 377,5 | ALM |
| 1.8 i 16V WOLOTG | E | 1796 | X18XE1,Z18XE | A | - | | 01/99 ▸ 06/03 | 1300213 | **732724** | 540 377,5 | ALM |
| 1.8 i 16V WOLOTG<br>▸ Y5291300, Y6129876 | E | 1796 | X18XE1 | A | + | | 01/99 ▸ 2000 | 1300196 | **732549** | 610 377,5 | ALM |
| 1.8 i 16V WOLOTG<br>▸ Y5291300, Y6132349 | E | 1796 | X18XE1 | A | - | | 01/99 ▸ 2000 | 1300187 | **732724** | 540 377,5 | ALM |
| 1.8 i 16V WOLOTG<br>Y8144151, Y2281475 ▸ Y5291300, Y8144150 | E | 1796 | X18XE1,Z18XE | A | + | | 01/99 ▸ | 1300214 | **732549** | 610 377,5 | ALM |
| 1.8 i 16V WOLOTG<br>▸ Y6132349, Y2284093 | E | 1796 | X18XE1 | M | - | | 01/99 ▸ | 1300187 | **732724** | 540 377,5 | ALM |
| 1.8 i 16V WOLOTG<br>▸ Y8144150, Y2279349 | E | 1796 | X18XE1 | M | + | | 01/99 ▸ 2000 | 1300196 | **732549** | 610 377,5 | ALM |
| 1.8 i 16V WOLOTG<br>▸ Y8144150, Y5291300 | E | 1796 | X18XE1,Z18XE | M | + | | 01/99 ▸ | 1300214 | **732549** | 610 377,5 | ALM |
| 2.0 i Turbo 16V WOLOTG | E | 1998 | Z20LET | M | | | 09/01 ▸ 06/03 | 1300241 | **732548** | 610 377,5 | ALM |
| 2.2 i 16V WOLOTG | E | 2198 | Z22SE | M | + | | 01/99 ▸ | 1300216 | **732548** | 610 377,5 | ALM |
| 2.2 i 16V WOLOTG | E | 2198 | Z22SE | M | + | | 01/99 ▸ 06/03 | 1300241 | **732548** | 610 377,5 | ALM |
| 2.2 i 16V WOLOTG | E | 2198 | Z22SE | M | - | | 01/99 ▸ | 1300214 | **732549** | 610 377,5 | ALM |
| 2.2 i 16V WOLOTG | E | 2198 | Z22SE | M | - | | 01/99 ▸ 06/03 | 1300257 | **732549** | 610 377,5 | ALM |
| 2.2 i 16V WOLOTG | E | 2198 | Z22SE | A | + | | 01/99 ▸ 06/03 | 1300241 | **732548** | 610 377,5 | ALM |
| 2.2 i 16V WOLOTG | E | 2198 | Z22SE | A | + | | 01/99 ▸ | 1300216 | **732548** | 610 377,5 | ALM |

Radiator Radiateur Motorkühler Radiatore di raffreddamento Radiator Radyatör Radiador Радиатор vízhűtő Vodní chladič Radiator Ψυγείο



• **New** Nouveau **Nuevo** Novo **Nuovo** Nieuw **Neu** Nowość **Yeni** Новый Νέο **Nový**

# OPEL (.../...)

## ZAFIRA (98>2003) (.../...)

| | | | CC | | | AC | | | OE | Valeo | DIM. | TECH |
|---|---|---|---|---|---|---|---|---|---|---|---|---|
| 2.2 i 16V | WOL0TG | E | 2198 | Z22SE | A | - | | 01/99 ▸ 06/03 | 1300257 | 732549 | 610 377,5 | ALM |
| 2.2 i 16V | WOL0TG | E | 2198 | Z22SE | A | - | | 01/99 ▸ | 1300214 | 732549 | 610 377,5 | ALM |
| 2.0 DTi 16V | WOL0TG | D | 1995 | Y20DTH | M | +/- | | 01/99 ▸ | 1300210 | 734388 | 600 368 | |
| 2.0 DT 16V | WOL0TG | D | 1995 | X20DTL | M | + | | 01/99 ▸ 06/03 | 1300208 | 732550 | 610 377 | CBS |
| 2.0 DT 16V<br>Y2276807 ▸ | WOL0TG | D | 1995 | X20DTL | M | - | | 01/99 ▸ | 1300216 | 732548 | 610 377,5 | ALM |
| 2.0 DT 16V<br>Y2276807 ▸ | WOL0TG | D | 1995 | X20DTL | M | - | | 2000 ▸ 06/03 | 1300241 | 732548 | 610 377,5 | ALM |
| 2.0 DTI 16V | | D | 1995 | Y20DTL | M | | | 01/99 ▸ 06/03 | 1300241 | 732548 | 610 377,5 | ALM |
| 2.0 DT 16V,2.0 DTI 16V | WOL0TG | D | 1995 | X20DTL,Y20DTL | A | +/- | | 01/99 ▸ | 1300216 | 732548 | 610 377,5 | ALM |
| 2.0 DT 16V,2.0 DTI 16V | WOL0TG | D | 1995 | X20DTL,Y20DTL | A | +/- | | 01/99 ▸ 2000 | 1300197 | 732548 | 610 377,5 | ALM |
| 2.0 DTI 16V | WOL0TG | D | 1995 | Y20DTL | A | +/- | | 01/99 ▸ 06/03 | 1300241 | 732548 | 610 377,5 | ALM |
| 2.0 DT 16V | WOL0TG | D | 1995 | X20DTL | A | - | | 01/99 ▸ 06/03 | 1300241 | 732548 | 610 377,5 | ALM |
| 2.0 DT 16V<br>▸ Y2276806 | WOL0TG | D | 1995 | X20DTL | M | - | | 01/99 ▸ 2000 | 1300197 | 732548 | 610 377,5 | ALM |
| 2.0 DT 16V<br>▸ Y2276806 | WOL0TG | D | 1995 | X20DTL | M | | | 01/99 ▸ | 1300216 | 732548 | 610 377,5 | ALM |
| 2.0 DT 16V | WOL0TG | D | 1995 | X20DTL | A | | | 01/99 ▸ | 1300216 | 732548 | 610 377,5 | ALM |

## ZAFIRA (2003>2005)

| | | | | | | | | | | | | |
|---|---|---|---|---|---|---|---|---|---|---|---|---|
| 1.6 i GNV 16V | QG75IB ; QM75IB | G | 1598 | Z16YNG | M | + | | 07/03 ▸ 06/05 | 1300257 | 732549 | 610 377,5 | ALM |
| 1.6 i GNV 16V | QG75IB ; QM75IB | G | 1598 | Z16YNG | M | - | | 07/03 ▸ 06/05 | 1300213 | 732724 | 540 377,5 | ALM |
| 1.6 i 16V | QG75IX ; QM75IX | E | 1598 | Z16XE,Z16XE/D4 | M | +/- | | 07/03 ▸ 06/05 | 1300241 | 732548 | 610 377,5 | ALM |
| 1.6 i 16V | QG75IX ; QM75IX | E | 1598 | Z16XE,Z16XE/D4 | M | | | 07/03 ▸ 06/05 | 1300213 | 732724 | 540 377,5 | ALM |
| 1.8 i 16V | QD75KH ; QX75KH | E | 1796 | Z18XE | M | +/- | | 07/03 ▸ 06/05 | 1300241 | 732548 | 610 377,5 | ALM |
| 1.8 i 16V | QD75KH ; QX75KH | E | 1796 | Z18XE | M | | | 07/03 ▸ 06/05 | 1300213 | 732724 | 540 377,5 | ALM |
| 1.8 i 16V | QX75KH | E | 1796 | Z18XE | A | +/- | | 07/03 ▸ 06/05 | 90570725 | 732724 | 540 377,5 | ALM |
| 1.8 i 16V | QX75KH | E | 1796 | Z18XE | A | +/- | | 07/03 ▸ 06/05 | 1300241 | 732548 | 610 377,5 | ALM |
| 1.8 i 16V | QX75KH | E | 1796 | Z18XE | A | | | 07/03 ▸ 06/05 | 1300213 | 732724 | 540 377,5 | ALM |
| 2.0 i Turbo 16V | QD75MY | E | 1998 | Z20LET | M | | | 07/03 ▸ 06/05 | 1300241 | 732548 | 610 377,5 | ALM |
| 2.2 i 16V | QD75P1 | E | 2198 | Z22SE | M | +/- | | 07/03 ▸ 06/05 | 1300257 | 732549 | 610 377,5 | ALM |
| 2.2 i 16V | QD75P1 | E | 2198 | Z22SE | A | +/- | | 07/03 ▸ 06/05 | 1300257 | 732549 | 610 377,5 | ALM |
| 2.0 DTI 16V | QG75MR ; QM75MR<br>QX75MR ; QD7/5MR | D | 1995 | Y20DTH | M | + | | 07/03 ▸ 06/05 | 1300208 | 732550 | 610 377 | CBS |
| 2.0 DTI 16V | QM75MI ; QX75MI<br>QG7/5MI | D | 1995 | Y20DTH | A | + | | 07/03 ▸ 06/05 | 1300241 | 732548 | 610 377,5 | ALM |
| 2.2 DTI 16V | QD7/5PR/5PW ; QX7<br>5PR/5PW | D | 2171 | Y22DTR | M | - | | 07/03 ▸ | 1300210 | 734388 | 600 368 | |

## ZAFIRA II (2005>)

| | | | | | | | | | | | | |
|---|---|---|---|---|---|---|---|---|---|---|---|---|
| 1.6 i GNV 16V | | F | 1598 | Z16YNG | M | +/- | | 01/06 ▸ 07/08 | 1300265 | 734381 | 600 370 | |
| 1.6 i 16V | | E | 1598 | Z16XEP | M | +/- | | 07/05 ▸ 07/08 | 1300266 | 734382 | 600 370 | ALB |
| 1.6 i VVT 16V | | E | 1598 | Z16XER | M | | | 12/07 ▸ 07/08 | 1300266 | 734382 | 600 370 | ALB |
| 1.8 i 16V | | E | 1796 | Z18XER | M | | | 09/05 ▸ 07/08 | 1300266 | 734382 | 600 370 | ALB |
| 2.0 i Turbo 16V | | E | 1998 | Z20LER | M | +/- | | 07/05 ▸ 07/08 | 1300267 | 734432 | 600 370 | ALB |
| 2.2 i 16V | | E | 2198 | Z22YH | M | +/- | | 07/05 ▸ 07/08 | 1300267 | 734432 | 600 370 | ALB |
| 1.7 CDTI 16V | | D | 1686 | A17DTJ/F,Z17DTJ/F | M | | | 01/08 ▸ 07/08 | 1300269 | 734380 | 600 370 | |
| 1.9 CDTI | | D | 1910 | Z19DT,Z19DTL | M | +/- | | > ▸ 07/08 | 1300269 | 734380 | 600 370 | |

## ZAFIRA II (2007>)

| | | | | | | | | | | | | |
|---|---|---|---|---|---|---|---|---|---|---|---|---|
| 1.6 i GNV 16V | | F | 1598 | Z16YNG | M | | | 07/08 ▸ | 1300265 | 734381 | 600 370 | |
| 1.6 i 16V | | E | 1598 | Z16XER | M | +/- | | 07/08 ▸ | 1300266 | 734382 | 600 370 | ALB |
| 1.8 i 16V | | E | 1796 | Z18XER | M | +/- | | 07/08 ▸ | 1300266 | 734382 | 600 370 | ALB |
| 2.0 i Turbo 16V | | E | 1998 | Z20LER | M | +/- | | 07/08 ▸ | 1300267 | 734432 | 600 370 | ALB |
| 2.2 i 16V | | E | 2198 | Z22YH | M | +/- | | 07/08 ▸ | 1300267 | 734432 | 600 370 | ALB |
| 1.7 CDTI 16V | | D | 1686 | A17DTJ/F | M | +/- | | 07/08 ▸ | 1300269 | 734380 | 600 370 | |
| 1.9 CDTI 16V | | D | 1910 | Z19DT/F,Z19DTL/F | M | | | 07/08 ▸ | 1300269 | 734380 | 600 370 | |

# OPEL

## ARENA

| | | | | | | | | | | | | |
|---|---|---|---|---|---|---|---|---|---|---|---|---|
| 1.9 D | TF1/J/L ; THB/J/L | D | 1870 | F8Q.6.00,F8Q.6.06 | M | | TSW | 01/98 ▸ 08/01 | 4400916 | 732940 | 650 395 | CBS |
| 2.5 D | TF1 ; THB | D | 2499 | S8U.7.58 | M | +/- | TSW | 01/98 ▸ 08/01 | 4401893 | 730944 | 655 398 | CBS |

## COMBO (85>93)

| | | | | | | | | | | | | |
|---|---|---|---|---|---|---|---|---|---|---|---|---|
| 1.3,1.3 i<br>J4327959 ▸ | PBV783 | E | 1297 | 13S,C13N | M | - | TSW | 1988 ▸ 03/93 | 1302016 | 883920 | 530 229 | ALM |

# OPEL (.../...)

| Type Ctr. | | CC | | AC | | 2+3 | OE | Valeo | DIM. | TECH |
|---|---|---|---|---|---|---|---|---|---|---|
| **COMBO (85>93) (.../...)** | | | | | | | | | | |
| 1.3,1.3 i PBV/783/983 L5053352, LB524411 ▸ | E | 1297 | 13N,13S,C13N | M | | TSW | 07/85 ▸ 03/93 | 1302057 | **883880** | 525 322 | ALM |
| 1.3 J4327959 ▸ | E | 1297 | 13S | A | - | TSW | 1988 ▸ 06/90 | 1302016 | **883920** | 530 229 | ALM |
| 1.3 L2538337, L5053352 ▸ | E | 1297 | 13S | A | | TSW | 07/85 ▸ 06/90 | 1302057 | **883880** | 525 322 | ALM |
| 1.3 PBV783 ▸ J4327958 | E | 1297 | 13S | M | - | TSW | 07/85 ▸ 1988 | 1302015 | **883771** | 530 285 | ALM |
| 1.3 PBV783 ▸ J4327958 | E | 1297 | 13S | M | - | TSW | 07/85 ▸ 1988 | 1300016 | **883920** | 530 229 | ALM |
| 1.3 ▸ J4327958 | E | 1297 | 13S | A | - | TSW | 07/85 ▸ 1988 | 1300016 | **883920** | 530 229 | ALM |
| 1.3 ▸ J4327958 | E | 1297 | 13S | A | - | TSW | 07/85 ▸ 1988 | 1302015 | **883771** | 530 285 | ALM |
| 1.3,1.3 i PBV/783/983 ▸ L2538336, LB524410 | E | 1297 | 13N,13S,C13N | M | | TSW | 07/85 ▸ | 1302074 | **883857** | 530 285 | ALM |
| 1.3 ▸ LB524410, L2538336 | E | 1297 | 13S | A | | TSW | 07/85 ▸ | 1302074 | **883857** | 530 285 | ALM |
| 1.4 i L4242423 ▸ | E | 1389 | C14NZ | M | - | TSW | 09/89 ▸ 03/93 | 1300016 | **883920** | 530 229 | ALM |
| 1.4,1.4 i PBV382 | E | 1389 | 14NV,C14NZ | M | - | TSW | 09/89 ▸ 06/91 | 1302016 | **883920** | 530 229 | ALM |
| 1.4 i L4242423 ▸ | E | 1389 | C14NZ | M | - | TSW | 1990 ▸ 03/93 | 1302015 | **883771** | 530 285 | ALM |
| 1.4,1.4 i PBV382 L2538337, LB524411 ▸ | E | 1389 | 14NV,C14NZ | M | | TSW | 09/89 ▸ 06/91 | 1302057 | **883880** | 525 322 | ALM |
| 1.4,1.4 i ▸ L5053351, L2538336 | E | 1389 | 14NV,C14NZ | M | | TSW | 09/89 ▸ | 1302074 | **883857** | 530 285 | ALM |
| 1.6,1.6 i L5053352, L2538337 ▸ | E | 1598 | C16LZ,E16NZ | M | | TSW | 08/86 ▸ 03/93 | 1300100 | **883881** | 525 322 | ALM |
| 1.6 L2538337, LB524411 ▸ | E | 1598 | C16LZ | A | | TSW | 08/86 ▸ 03/93 | 1300100 | **883881** | 525 322 | ALM |
| 1.6,1.6 i ▸ LB524410, L2538336 | E | 1598 | C16LZ,E16NZ | M | | TSW | 08/86 ▸ | 1302077 | **883858** | 630 322 | ALM |
| 1.6 D E5T433 | D | 1598 | 16D | M | | TSW | 07/85 ▸ 06/90 | 1300126 | **730125** | 635 322 | ALM |
| 1.7 D PBV438 ; T3448 | D | 1699 | 17D | M | | TSW | 08/90 ▸ 03/93 | 1300124 | **731217** | 520 370 | CBS |
| **COMBO (93>2001)** | | | | | | | | | | |
| 1.2,1.2 i | E | 1195 | 12NZ,C12NZ,X12SZ | M | + | TSW | 03/93 ▸ 09/01 | 1300153 | **734271** | 680 273 | ALB |
| 1.2,1.2 i | E | 1195 | 12NZ,C12NZ,X12SZ | M | - | TSW | 03/93 ▸ 09/01 | 1300149 | **731013** | 530 285 | ALM |
| 1.2,1.2 i | E | 1195 | 12NZ,C12NZ,X12SZ | M | | TSW | 03/93 ▸ 09/01 | 1300150 | **731178** | 530 285 | ALM |
| 1.4 i | E | 1389 | C14NZ,C14SE,X14SZ | M | + | TSW | 03/93 ▸ 09/01 | 1300153 | **734271** | 680 273 | ALB |
| 1.4 i | E | 1389 | C14NZ,C14SE,X14SZ | M | - | TSW | 03/93 ▸ 09/01 | 1300149 | **731013** | 530 285 | ALM |
| 1.4 i | E | 1389 | C14NZ,C14SE,X14SZ | M | | TSW | 03/93 ▸ 09/01 | 1300150 | **731178** | 530 285 | ALM |
| 1.7 D | D | 1686 | X17D | M | + | TSW | 07/95 ▸ 09/01 | 1300153 | **734271** | 680 273 | ALB |
| 1.7 D | D | 1686 | X17D | M | - | TSW | 07/95 ▸ 09/01 | 1300151 | **731179** | 650 266 | ALB |
| 1.7 D | D | 1699 | 17D | M | + | TSW | 03/93 ▸ 09/01 | 1300153 | **734271** | 680 273 | ALB |
| 1.7 D | D | 1699 | 17D | M | - | TSW | 03/93 ▸ 09/01 | 1300151 | **731179** | 650 266 | ALB |
| **COMBO (2001>2004)** | | | | | | | | | | |
| 1.6 i DC25I1 ; DF25I1 | E | 1598 | Z16SE/E4 | M | - | | 10/01 ▸ 06/04 | 1300237 | **732826** | 540 377,5 | ALM |
| 1.7 DI 16V,1.7 DTi 16V DC2/5JC/5JD ; DF2 5JC/5JD | D | 1686 | Y17DT,Y17DTL | M | | | 10/01 ▸ 06/04 | 1300233 | **732824** | 628 377,5 | ALM |
| **COMBO (2004>)** | | | | | | | | | | |
| 1.6 i GNV | G | 1598 | Z16YNG | M | | | 04/05 ▸ | 1300237 | **732826** | 540 377,5 | ALM |
| 1.4 i Twinport 16V DF25G0 | E | 1364 | Z14XEP | M | | | 07/04 ▸ | 1300236 | **732825** | 540 377,5 | ALM |
| 1.3 CDTI 16V | D | 1248 | Z13DT,Z13DTJ | M | + | | 07/04 ▸ | 1300259 | **734464** | 600 350 | ALM |
| 1.3 CDTI 16V DF25FB | D | 1248 | Z13DT,Z13DTJ | M | - | | 07/04 ▸ | 1300261 | **734464** | 600 350 | ALM |
| 1.7 CDTI 16V DF25JK | D | 1686 | Z17DTH | M | + | | 07/04 ▸ | 1300259 | **734464** | 600 350 | ALM |
| 1.7 CDTI 16V DF25JK | D | 1686 | Z17DTH | M | - | | 07/04 ▸ | 1300261 | **734464** | 600 350 | ALM |
| **COMBO TOUR (2002>2004)** | | | | | | | | | | |
| 1.6 i DF06I1 ; DG06I1 | E | 1598 | Z16SE/E4 | M | - | | 04/02 ▸ 06/04 | 1300237 | **732826** | 540 377,5 | ALM |
| 1.7 DI 16V,1.7 DTi 16V DG06JC ; DF06JD DF06JC ; DG06JD | D | 1686 | Y17DT,Y17DTL | M | | | 04/02 ▸ 06/04 | 1300233 | **732824** | 628 377,5 | ALM |
| **COMBO TOUR (2004>)** | | | | | | | | | | |
| 1.6 i GNV | G | 1598 | Z16YNG | M | - | | 04/05 ▸ | 1300237 | **732826** | 540 377,5 | ALM |
| 1.4 i Twinport 16V DF06G0 | E | 1364 | Z14XEP | M | | | 07/04 ▸ | 1300236 | **732825** | 540 377,5 | ALM |
| 1.4 i Twinport 16V DF06G0 | E | 1364 | Z14XEP | M | | | 07/04 ▸ | 1300236 | **732825** | 540 377,5 | ALM |

Radiator Ψυγείο Vodní chladič vízhűtő Радиатор Radiador Radiator Radyatör Radiator Radiatore di raffreddamento Motorkühler Radiateur Radiator



• **New** Nouveau **Nuevo** Novo **Nuovo** Nieuw **Neu** Nowość **Yeni** Новый Νέο **Novy**

| Type Ctr. | | CC | | AC | | | OE | Valeo | DIM. | TECH |
|---|---|---|---|---|---|---|---|---|---|---|

# OPEL (.../...)

## COMBO TOUR (2004>) (.../...)

| | | | | | | | | | | | | |
|---|---|---|---|---|---|---|---|---|---|---|---|---|
| 1.3 CDTI 16V | DF06FB | D | 1248 | Y13DT,Z13DT,Z13DTJ | M | + | | 07/04 ▸ | 1300259 | **734464** | 600 350 | ALM |
| 1.3 CDTI 16V | DF06FB | D | 1248 | Y13DT,Z13DT,Z13DTJ | M | - | | 07/04 ▸ | 1300261 | **734464** | 600 350 | ALM |
| 1.7 CDTI 16V | DF06JK | D | 1686 | Z17DTH | M | - | | 07/04 ▸ | 1300261 | **734464** | 600 350 | ALM |
| 1.7 CDTI 16V | DF06JK | D | 1686 | Z17DTH | M | + | | 07/04 ▸ | 1300259 | **734464** | 600 350 | ALM |

## MOVANO

| | | | | | | | | | | | | |
|---|---|---|---|---|---|---|---|---|---|---|---|---|
| 1.9 DTi | FD0P ; JD0P | D | 1870 | F9Q.7.72 | M | + | TSW | 10/03 ▸ 10/06 | 4414972 | **732918** | 730 414,5 | ALM |
| 1.9 DTi | FD0P ; JD0P | D | 1870 | F9Q.7.74 | M | + | TSW | 10/03 ▸ 10/06 | 4415066 | **732919** | 730 414,5 | ALB |
| 1.9 DTi | FD/ ; JD ; FD0/L/P JD0/L/P | D | 1870 | F9Q.7.70,F9Q.7.72 | M | - | TSW | 08/00 ▸ 10/06 | 4403216 | **732798** | 728 414,5 | ALB |
| 1.9 DTi | FD0P ; JD0P | D | 1870 | F9Q.7.74 | M | - | TSW | 10/03 ▸ 10/06 | 4415064 | **732917** | 730 414,5 | ALM |
| 1.9 DTi ▸ B425049 | FD/ ; JD ; FD0/L/P JD0/L/P | D | 1870 | F9Q.7.70,F9Q.7.72 | M | + | TSW | 08/00 ▸ | 4501137 | **732050** | 730 396 | CBS |
| 2.2 Dti 16V | ED/ ; ED0G ; FD ED0/G/N ; FD0/G/N ; JD ; HD0/G/N ; UD ; JD0 G/N ; UD0/G/N ; UD4/G/N | D | 2188 | G9T.7.20,G9T.7.22 | M | +/- | TSW | 09/00 ▸ 10/06 | 4403216 | **732798** | 728 414,5 | ALB |
| 2.2 Dti 16V | FD ; JD ; UD ; ED | D | 2188 | G9T.7.20 | M | + | TSW | 09/00 ▸ 09/03 | 4501137 | **732050** | 730 396 | CBS |
| 2.2 DTi 16V | FD0N ; JD0N | D | 2188 | G9T.7.50 | M | + | TSW | 10/03 ▸ 10/05 | 4415066 | **732919** | 730 414,5 | ALB |
| 2.2 DTi 16V | FD0N ; JD0N | D | 2188 | G9T.7.50 | M | - | TSW | 10/03 ▸ 10/05 | 4415064 | **732917** | 730 414,5 | ALM |
| 2.5 CDTi 16V,2.5 Dti 16V ▸ B425014 | ED0/E/U ; FD0/E/U HD0/E/U ; JD0/E/U ; UD0/E/U ; UD4/E/U | D | 2464 | G9U.7.20,G9U.7.24 | M | + | TSW | > ▸ 10/06 | 4414972 | **732918** | 730 414,5 | ALM |
| 2.5 CDTi,2.5 DTi 2.5 Dti 16V ▸ B534610, B748443 | ED0/M/U/V/W ; FD0/M U/V/W ; HD0V ; HD0/M V/W ; JD0/M/V/W ; UD0/M/U/V/W ; UD4/M/V/W | D | 2464 | G9U.7.50,G9U.7.54 | M | + | TSW | > ▸ | 4415066 | **732919** | 730 414,5 | ALB |
| 2.5 CDTi 16V,2.5 DTi 16V | ED0/E/U ; FD0/E/U HD0/E/U ; JD0/E/U ; UD0/E/U ; UD4/E/U | D | 2464 | G9U.7.20,G9U.7.24 | M | + | TSW | 10/01 ▸ | 4501137 | **732050** | 730 396 | CBS |
| 2.5 CDTi 16V,2.5 Dti 16V | ED0/E/U ; FD0/E/U HD0/E/U ; JD0/E/U ; UD0/E/U ; UD4/E/U | D | 2464 | G9U.7.20,G9U.7.24 | M | - | TSW | 10/01 ▸ 10/06 | 4403216 | **732798** | 728 414,5 | ALB |
| 2.5 CDTi,2.5 DTi 2.5 DTi 16V | ED0/U/V ; FD0/U/V HD0V ; JD0V ; HD0/U V ; UD4V ; UD0/U/V | D | 2464 | G9U.7.54 | M | - | TSW | 10/03 ▸ | 4415064 | **732917** | 730 414,5 | ALM |
| 2.5 CDTi,2.5 DTi 2.5 Dti 16V ▸ B534609 | ED0/M/U/V/W ; FD0/M U/V/W ; HD0V ; HD0/M U/V/W ; JD0/M/V/W ; UD0/M/U/V/W ; UD4/M/V/W | D | 2464 | G9U.7.50,G9U.7.54 | M | + | TSW | 10/01 ▸ | 4415068 | **732919** | 730 414,5 | ALB |
| 2.5 D | FD ; JD ; UD ; ED | D | 2499 | S8U.7.72 | M | + | TSW | 10/98 ▸ 10/01 | 4501137 | **732050** | 730 396 | CBS |
| 2.8 Dti | FD0C ; JD0F ; UD0C ED0/C | D | 2800 | S9W.7.00,S9W.7.02 | M | +/- | TSW | 10/98 ▸ 10/01 | 4501137 | **732050** | 730 396 | CBS |
| 2.8 Dti ▸ B000779, B049873 | FD0C ; JD0F ; UD0C ED0/C | D | 2800 | S9W.7.00,S9W.7.02 | M | - | TSW | > ▸ 10/01 | 4403216 | **732798** | 728 414,5 | ALB |
| 3.0 CDTi 16V,3.0 Dti 16V | FD0S ; JD0T ; UD0S ED0/S | D | 2953 | ZD3.2.00,ZD3.2.02 | M | + | TSW | 10/03 ▸ 01/06 | 4415068 | **732919** | 730 414,5 | ALB |
| 3.0 CDTi 16V,3.0 Dti 16V | FD0S ; JD0T ; UD0S ED0/S | D | 2953 | ZD3.2.00,ZD3.2.02 | M | - | TSW | 10/03 ▸ 01/06 | 4415066 | **732919** | 730 414,5 | ALB |

## VIVARO (2001>2006)

| | | | | | | | | | | | | |
|---|---|---|---|---|---|---|---|---|---|---|---|---|
| 2.0 i 16V | 1F05MD ; 1G05MD | E | 1998 | F4R.7.20 | M | +/- | | 05/01 ▸ 07/06 | 4408645 | **732846** | 560 469 | ALB |
| 1.9 DI,1.9 DTI | 1F0/5LD/5LE ; 1G0 3LD/3LE/5LD/5LE | D | 1870 | F9Q.7.60,F9Q.7.62 | M | + | | 05/01 ▸ 07/06 | 4408645 | **732846** | 560 469 | ALB |
| 1.9 DI,1.9 DTI | 1F0/5LD/5LE ; 1G0 3LD/3LE/5LD/5LE | D | 1870 | F9Q.7.60,F9Q.7.62 | M | - | | 05/01 ▸ 07/06 | 4414161 | **732853** | 561 470 | ALM |
| 2.5 DTI | 1F0/5SA/6SA ; 1G0 3SA/5SA/6SA | D | 2464 | G9U.7.30 | M | + | | 05/03 ▸ 07/06 | 4412816 | **732911** | 780 479 | ALB |
| 2.5 DTI | 1F0/5SA/6SA ; 1G0 3SA/5SA/6SA | D | 2464 | G9U.7.30 | M | - | | 05/03 ▸ 07/06 | 4412817 | **732902** | 781,4 470 | ALM |
| 2.5 DTI | 1F0/5SA/6SA ; 1G0 3SA/5SA/6SA | D | 2464 | G9U.7.30 | M | - | | 05/03 ▸ | 4414578 | **732902** | 781,4 470 | ALM |

## VIVARO (2006>)

| | | | | | | | | | | | | |
|---|---|---|---|---|---|---|---|---|---|---|---|---|
| 2.0 i 16V | | E | 1998 | F4R-820 | M | +/- | | 07/06 ▸ | 4408645 | **732846** | 560 469 | ALB |
| 2.0 CDTI | | D | 1995 | M9R.7.80 | M | +/- | | 07/06 ▸ | 4416948 | **734946** | 558 462,2 | ALB |

# PEUGEOT

## 106 (91>96)

| | | | | | | | | | | | | |
|---|---|---|---|---|---|---|---|---|---|---|---|---|
| 1.0 i | 1AC/DY1/DY2/DZ1/DZ2 ; 1CC/DY1/DY2/DZ1/DZ2 1SC/DY1/DZ2 | E | 954 | TU9M,TU9MPR | M | + | TSW | 06/92 ▸ 03/96 | 1301D0 | **730368** | 530 322 | ALB |

# PEUGEOT (.../...)

## 106 (91>96) (.../...)

| Type Ctr. | | CC | | AC | | 2+3 | OE | Valeo | DIM. | | TECH |
|---|---|---|---|---|---|---|---|---|---|---|---|
| 1.0,1.0 i 1AC/1A1/DY1/DY2/DZ1 DZ2 ; 1CC/1A1/1A2/DY1/DY2/DZ1/DZ2 ; 1SC/1A1 DY1/DZ2 | E | 954 | TU9,TU9M,TU9MPR | M | - | TSW 819752 | 09/91 ▸ 03/96 | 1301B0 | 730372 | 390 | 322 | ALM |
| 1.1,1.1 i 1AH/1A1/1A2/DY2/DZ1 DZ2/DZ8 ; 1CH/1A1/1A2/DY1/DY2/DZ1/DZ2/DZ8 1SH/1A1/1A2/3A1/DZ2 | E | 1124 | TU1,TU1M,TU1TR | M | + | TSW | 09/91 ▸ 03/96 | 1301D0 | 730368 | 530 | 322 | ALB |
| 1.1,1.1 i 1AH/1A1/1A2/3A1/3A2 DY2/DZ1/DZ2/DZ8 ; 1CH/1A1/1A2/3A1/DY1/DY2 DZ1/DZ2/DZ8 ; 1SH/1A1/1A2/3A1/DZ2 | E | 1124 | TU1,TU1M,TU1TR | M | - | TSW 819752 | 09/91 ▸ 03/96 | 1301B0 | 730372 | 390 | 322 | ALM |
| 1.3 i 1CMFZ2 | E | 1294 | TU2J2 | M | - | TSW | 06/93 ▸ 03/96 | 1301V6 | 730515 | 530 | 322 | ALM |
| 1.4,1.4 i 1AK/2D2/DX8/DY2 1CK/2D2/6B2/DX2/DX8/DY2/FZ2 | E | 1360 | TU3.2,TU3FJ2,TU3FMC,TU3J2 TU3M | M | + | TSW | 09/91 ▸ 03/96 | 1301D0 | 730368 | 530 | 322 | ALB |
| 1.4,1.4 i 1AK/2D2/3A2/DX8/DY2 1CK/2D2/3A2/DX2/DX8/DY2 | E | 1360 | TU3,TU3.2,TU3FMC,TU3M | M | - | TSW 819752 | 09/91 ▸ 03/96 | 1301B0 | 730372 | 390 | 322 | ALM |
| 1.4 i 1CK/6B2/FZ2 | E | 1360 | TU3FJ2,TU3J2 | M | - | TSW | 09/91 ▸ 03/96 | 1301V8 | 730515 | 530 | 322 | ALM |
| 1.6 i 1AN/FZ2 ; 1CN/FY2/FZ2 | E | 1587 | TU5J2,TU5JP | M | + | TSW | 06/93 ▸ 03/96 | 1301D0 | 730368 | 530 | 322 | ALB |
| 1.6 i 1AN/FZ2 ; 1CN/FY2/FZ2 | E | 1587 | TU5J2,TU5JP | M | - | TSW | 06/93 ▸ 03/96 | 1301V8 | 730515 | 530 | 322 | ALM |
| 1.6 i 1ANFZ4 ; 1CNFZ4 | E | 1587 | TU5JP | A | + | TSW | 06/93 ▸ 03/96 | 1301D0 | 730368 | 530 | 322 | ALB |
| 1.6 i 1ANFZ4 ; 1CNFZ4 | E | 1587 | TU5JP | A | - | VCAP TSW | 06/93 ▸ 03/96 | 1301HX | 731527 | 530 | 322 | ALM |
| 1.4 D 1AK/9B1/9B2/9B9/9Y2 ; 1CK/9B1/9B2/9Y2 ; 1SK 9B1/9B2/9B9/9Y2 | D | 1360 | TUD3 | M | + | TSW | 06/92 ▸ 03/96 | 1301D0 | 730368 | 530 | 322 | ALB |
| 1.4 D 1AK/9B1/9B2/9B9/9Y2 ; 1CK/9B1/9B2/9Y2 ; 1SK 9B1/9B2/9B9/9Y2 | D | 1360 | TUD3 | M | - | TSW | 06/92 ▸ 03/96 | 1301L7 | 731176 | 610 | 377,5 | ALM |
| 1.4 D 1AK/9B1/9B2/9B9/9Y2 ; 1CK/9B1/9B2/9Y2 ; 1SK 9B1/9B2/9B9/9Y2 | D | 1360 | TUD3 | M | - | TSW 819752 | 06/92 ▸ 03/96 | 1301L5 | 730569 | 530 | 322 | ALM |
| 1.5 D 1AV/JY2/JZ2 ; 1SVJY2 ; 1CV/JY2/JZ2 | D | 1527 | TUD5 | M | + | TSW | 07/94 ▸ 03/96 | 1301D0 | 730368 | 530 | 322 | ALB |
| 1.5 D 1AV/JY2/JZ2 ; 1SVJY2 ; 1CV/JY2/JZ2 | D | 1527 | TUD5 | M | - | TSW | 07/94 ▸ 03/96 | 133005 | 731186 | 525 | 322 | ALM |

## 106 (96>2003)

| | | | | | | | | | | | | |
|---|---|---|---|---|---|---|---|---|---|---|---|---|
| 1.0 i 1AC/DYE/DZD/DZE/DZW ; 1CC/DYE/DZD/DZE/DZW 1SC/DZD/DZE | E | 954 | TU9M | M | +/- | TSW | 03/96 ▸ 07/03 | 1301SQ | 731498 | 390 | 322 | ALM |
| 1.1,1.1 i 1AH/3A2/3A8/DYE/DZD DZE ; 1CH/3A2/DYE/DZD/DZE | E | 1124 | TU1M+,TU1TR | M | + | TSW | 03/96 ▸ 12/96 | 133001 | 731526 | 530 | 322 | ALM |
| 1.1,1.1 i,1.1 i GPL 1AH/3A2/3A8/DYE/DZD DZE/FXF ; 1SHFXF ; 1CH/3A2/DYE/DZD/DZE/FXF | E | 1124 | TU1JP,TU1M+,TU1TR | M | + | TSW | 12/96 ▸ 07/03 | 133029 | 731526 | 530 | 322 | ALM |
| 1.1 i 1CHFXF ; 1SHFXF ; 1AH/FXF | E | 1124 | TU1JP | M | + | VCAP TSW | 03/01 ▸ 07/03 | 1330A8 | 731527 | 530 | 322 | ALM |
| 1.1,1.1 i,1.1 i GPL 1AH/3A2/3A8/DYE/DZD DZE ; 1CH/3A2/DYE/DZD/DZE ; 1SH/DZD/DZE | E | 1124 | TU1M+,TU1TR | M | - | TSW | 03/96 ▸ 07/03 | 1301SQ | 731498 | 390 | 322 | ALM |
| 1.1 i 1CHFXF ; 1SHFXF ; 1AH/FXF | E | 1124 | TU1JP | M | - | TSW 819752 | 09/00 ▸ 03/01 | 133087 | 732794 | 530 | 322 | ALM |
| 1.1 i 1CHFXF ; 1SHFXF ; 1AH/FXF | E | 1124 | TU1JP | M | - | TSW 819752 | 03/01 ▸ 07/03 | 1330A7 | 732882 | 530 | 322 | ALM |
| 1.4,1.4 i 1AK/5A2/FXS/FXT 1CK/5A2/FXD/FXE/FXS/FXT | E | 1360 | TU3.2,TU3JP | M | + | TSW | 03/96 ▸ 12/96 | 133001 | 731526 | 530 | 322 | ALM |
| 1.4,1.4 i 1AK/5A2/FWF/FXE/FXS FXT/FXU ; 1CK/5A2/FWF/FWU/FXD/FXE/FXS/FXT FXU | E | 1360 | TU3.2,TU3JP | M | + | TSW | 12/96 ▸ 07/03 | 133029 | 731526 | 530 | 322 | ALM |
| 1.4 i 1AK/FWF/FXU ; 1CK/FWF/FWU/FXU | E | 1360 | TU3JP | M | + | VCAP TSW | 03/01 ▸ 07/03 | 1330A8 | 731527 | 530 | 322 | ALM |
| 1.4,1.4 i 1AK/5A2/FXE/FXS/FXT 1CK/5A2/FXD/FXE/FXS/FXT | E | 1360 | TU3.2,TU3JP | M | - | TSW | 03/96 ▸ 07/03 | 1301SQ | 731498 | 390 | 322 | ALM |
| 1.4 i 1AK/FWF/FXU ; 1CK/FWF/FWU/FXU | E | 1360 | TU3JP | M | - | TSW 819752 | 05/98 ▸ 03/01 | 133087 | 732794 | 530 | 322 | ALM |
| 1.4 i 1AK/FWF/FXU ; 1CK/FWF/FWU/FXU | E | 1360 | TU3JP | M | - | TSW 819752 | 03/01 ▸ 07/03 | 1330A7 | 732882 | 530 | 322 | ALM |
| 1.4 i 1AKFXL ; 1CKFXL | E | 1360 | TU3JP | A | +/- | TSW | 05/97 ▸ 07/03 | 133029 | 731526 | 530 | 322 | ALM |
| 1.6 i,1.6 i 16V 1CN/FWE/FX2/FXE/FXF | E | 1587 | TU5J2,TU5J4 | M | +/- | TSW | 03/96 ▸ 03/01 | 133029 | 731526 | 530 | 322 | ALM |
| 1.6 i,1.6 i 16V 1CN/FWE/FX2/FXE | E | 1587 | TU5J2,TU5J4 | M | +/- | TSW | 03/96 ▸ 12/96 | 133001 | 731526 | 530 | 322 | ALM |
| 1.6 i,1.6 i 16V 1CN/FWE/FX2/FXE/FXF | E | 1587 | TU5J2,TU5J4 | M | +/- | VCAP TSW | 03/01 ▸ 07/03 | 1330A8 | 731527 | 530 | 322 | ALM |
| 1.6 i 1ANFZE ; 1CNFZE | E | 1587 | TU5JP | M | + | TSW | 03/96 ▸ 12/96 | 133001 | 731526 | 530 | 322 | ALM |
| 1.6 i 1AN/FZE/FZT ; 1CN/FZE/FZT | E | 1587 | TU5JP | M | + | TSW | 12/96 ▸ 07/03 | 133029 | 731526 | 530 | 322 | ALM |
| 1.6 i 1AN/FZE/FZT ; 1CN/FZE/FZT | E | 1587 | TU5JP | M | - | VCAP TSW | 03/96 ▸ 07/03 | 1301TA | 731528 | 390 | 322 | ALM |
| 1.6 i 1ANFZL ; 1CNFZL | E | 1587 | TU5JP | A | +/- | TSW | 03/96 ▸ 07/03 | 133001 | 731526 | 530 | 322 | ALM |
| 1.5 D 1AV/JYE/JYF/JZD/JZE/JZF ; 1CV/JYE/JYF/JZD JZE/JZF ; 1SV/JYE/JZD/JZE | D | 1527 | TUD5 | M | +/- | TSW | 03/96 ▸ 07/00 | 1301VT | 731530 | 529 | 286 | ALB |
| 1.5 D 1AV/JUF/JXF/JYE/JYF/JZD/JZE/JZF ; 1CV/JUF JXF/JYE/JYF/JZD/JZE/JZF ; 1SV/JXF/JYE/JZD JZE | D | 1527 | TUD5,TUD5B | M | +/- | TSW | 01/99 ▸ 07/03 | 133092 | 731530 | 529 | 286 | ALB |

## 107

| | | | | | | | | | | | | |
|---|---|---|---|---|---|---|---|---|---|---|---|---|
| 1.0 i 12V PMCFAC ; PNCFAC | E | 998 | 384(CFA) | M | + | | 06/05 ▸ | 1330P5 | 735069 | 374 | 326 | ALB |

Radiator Ψυγείο Vodní chladič Radiator vízhűtő Радиатор Radiador Radiator Radyatör Radiator Radiatore di raffreddamento Motorkühler Radiateur



• **New** Nouveau **Nuevo** Novo **Nuovo** Nieuw **Neu** Nowość **Yeni** Новый Νέο **Nový**

# PEUGEOT (.../...)

## 107 (.../...)

| | Type Ctr. | | CC | | AC | | | OE | Valeo | DIM. | TECH |
|---|---|---|---|---|---|---|---|---|---|---|---|
| 1.0 i 12V | PMCFAC ; PNCFAC | E | 998 | 384(CFA) | M | - | | 06/05 ▸ | 1330P4 | **735072** | 374 340 | ALB |
| 1.4 HDi | PM8HTC ; PN8HTC | D | 1398 | DV4TD | M | + | | 06/05 ▸ | 1330P3 | **735070** | 374 326 | ALB |
| 1.4 HDi | PM8HTC ; PN8HTC | D | 1398 | DV4TD | M | - | | 06/05 ▸ | 1330P2 | **735070** | 374 326 | ALB |

## 205

| | | | | | | | | | | | | |
|---|---|---|---|---|---|---|---|---|---|---|---|---|
| 1.0 | 20AN11 | E | 954 | XV8 | M | +/- | TSW | 08/87 ▸ 07/88 | 1300K6 | **730018** | 610 270 | CBS |
| 1.0,1.0 i | 20A/C11/C12/CD1/CD2 N12 ; 20SC11 ; 20C/C11/C12/CD1/CD2/L11/N11 N12 ; 741/A01/A07/C01/C07 | E | 954 | TU9,TU9M,XV8 | M | + | TSW | 02/83 ▸ 09/98 | 1300K6 | **730018** | 610 270 | CBS |
| 1.0,1.0 i | 20A/C11/C12/CD1/CD2 N11/N12 ; 20SC11 ; 20C/C11/C12/CD1/CD2/L11 N11/N12 ; 741/A01/A07/C01/C07 | E | 954 | TU9,TU9M,XV8 | M | - | TSW | 02/83 ▸ 09/98 | 1300K7 | **810892** | 480 285 | ALM |
| 1.0 | 741/A01/A07/C01/C07 | E | 954 | XV8 | M | | TSW | 02/83 ▸ 07/87 | | **810892** | 480 285 | ALM |
| 1.1 | 20S/E11/E12 ; 742/A11/A17/C11 | E | 1118 | E1 | M | - | TSW | 07/84 ▸ 07/88 | 133034 | **730534** | 470 287 | CBS |
| 1.1 | 742/A11/A17/C11 | E | 1118 | E1 | M | | TSW | 07/84 ▸ 07/87 | 1300A3 | **730534** | 470 287 | CBS |
| 1.1 | 20S/E11/E12 | E | 1118 | E1 | M | | TSW | 08/87 ▸ 07/88 | 1300J6 | **730534** | 470 287 | CBS |
| 1.1,1.1 i | 20D/H12/HD2 ; 741 B17/C17 | E | 1124 | TU1,TU1M,XW7 | M | +/- | TSW | 02/83 ▸ 12/94 | 1300K6 | **730018** | 610 270 | CBS |
| 1.1,1.1 i | 20D/H12/HD2 | E | 1124 | TU1,TU1M | M | +/- | TSW | 08/87 ▸ 12/94 | 1300K7 | **810892** | 480 285 | ALM |
| 1.1,1.1 i | 20A/H11/H12/H31/H32 HD2/L11/L12 ; 20C/H11/H12/H31/HD2/L11/L12 M11 ; 20S/H11/H12/HD2 ; 741/A11/A17/C11/S11 S17 | E | 1124 | TU1,TU1M,TU1TR,XW7 | M | + | TSW | 02/83 ▸ 09/98 | 1300K6 | **730018** | 610 270 | CBS |
| 1.1 | 20DH12 | E | 1124 | TU1 | M | + | TSW | 03/90 ▸ 12/94 | 133035 | **730018** | 610 270 | CBS |
| 1.1 | 20AF12 ; 742A27 | E | 1124 | F1 | M | - | TSW | 07/84 ▸ | 133034 | **730534** | 470 287 | CBS |
| 1.1 | 741/A11/A17/C11/C17/S11/S17 | E | 1124 | XW7 | M | | TSW | 02/83 ▸ 07/87 | | **810892** | 480 285 | ALM |
| 1.1 | 742A27 | E | 1124 | F1 | M | | TSW | 07/84 ▸ 07/87 | 1300A3 | **730534** | 470 287 | CBS |
| 1.1 | 20AF12 | E | 1124 | F1 | M | | TSW | 07/89 ▸ 06/93 | 1300J6 | **730534** | 470 287 | CBS |
| 1.3 | 20CM22 | E | 1294 | TU24 | M | + | TSW | 08/87 ▸ 06/93 | 1300K6 | **730018** | 610 270 | CBS |
| 1.3 | 20CG12 ; 20SG12 ; 20A/G12 ; 742/A47/C47 | E | 1294 | G1,G1A | M | - | TSW | 07/84 ▸ | 133034 | **730534** | 470 287 | CBS |
| 1.3 | 20CM22 | E | 1294 | TU24 | M | - | TSW | 08/87 ▸ 06/93 | 1300K7 | **810892** | 480 285 | ALM |
| 1.3 | 742/A47/C47 | E | 1294 | G1 | M | | TSW | 07/84 ▸ 07/87 | 1300A3 | **730534** | 470 287 | CBS |
| 1.3 | 20CG12 ; 20SG12 ; 20A/G12 | E | 1294 | G1,G1A | M | | TSW | 08/87 ▸ 06/93 | 1300J6 | **730534** | 470 287 | CBS |
| 1.4,1.4 i | 20D/K12/K22/KA2/KD2 T12 ; 741/A37/B57 | E | 1360 | TU3,TU3.2,TU3CP,TU3M,TU3S XY6B,XY7,XY8 | M | +/- | TSW | 02/83 ▸ 12/94 | 1300K6 | **730018** | 610 270 | CBS |
| 1.4,1.4 i | 20A/K11/K12/K22/K31 K32/KA2/KD2/KH1 ; 20C/K12/K22/KA2/KD2 ; 20S K11/K12/K31/L11/L12 ; 741/A41/A47/A57/C37 C47/C57/S41/S47 | E | 1360 | TU3,TU3.2,TU3A,TU3A1,TU3M TU3S,XY6B,XY7,XY7CP,XY8 | M | + | TSW | 02/83 ▸ 09/98 | 1300K6 | **730018** | 610 270 | CBS |
| 1.4 | 20DT12 | E | 1360 | XY7 | M | + | TSW | 03/90 ▸ 12/94 | 133035 | **730018** | 610 270 | CBS |
| 1.4,1.4 i | 20A/K11/K12/K22/K31 K32/KA2/KD2/KH1 ; 20C/K12/K22/KA2/KD2 ; 20D K12/K22/KA2/KD2/T12 ; 20S/K11/K12/K31/L11 L12 ; 741/A37/A41/A47/A57/B57/C37/C47/C57 S41/S47 | E | 1360 | TU3,TU3.2,TU3A,TU3A1,TU3CP TU3M,TU3S,XY6B,XY7,XY7CP,XY8 | M | - | | 02/83 ▸ | 1300K7 | **810892** | 480 285 | ALM |
| 1.4 | 20AK12 | E | 1360 | TU3A | M | - | TSW | 08/87 ▸ 06/93 | 1300K6 | **730018** | 610 270 | CBS |
| 1.4 | 20DK12 | E | 1360 | TU3A1 | M | | TSW | 08/87 ▸ 12/94 | 1300K6 | **730018** | 610 270 | CBS |
| 1.4 | 742/A52/A57 | E | 1442 | Y2 | M | - | TSW | 07/84 ▸ 07/87 | 133034 | **730534** | 470 287 | CBS |
| 1.4 | 742/A52/A57 | E | 1442 | Y2 | M | | TSW | 07/84 ▸ 07/87 | 1300A3 | **730534** | 470 287 | CBS |
| 1.6 i | 20DB62 | E | 1580 | XU5JA | M | +/- | TSW | 08/87 ▸ 07/89 | 133035 | **730018** | 610 270 | CBS |
| 1.6,1.6 i | 20A/BD2 ; 20C/B62 BD2 ; 20D/B62/BA2/BD2 | E | 1580 | XU51C,XU5J1,XU5JA,XU5M | M | + | | 08/89 ▸ 09/98 | 133035 | **730018** | 610 270 | CBS |
| 1.6 i | 20CB62 | E | 1580 | XU5JA | M | + | TSW | 08/89 ▸ 09/98 | 1300K8 | **730018** | 610 270 | CBS |
| 1.6,1.6 i | 20CB62 ; 20DBA2 20A/C27 ; 741/A27/C27 | E | 1580 | XU51C,XU5CP,XU5JA | M | - | | 02/83 ▸ 06/90 | 1300K7 | **810892** | 480 285 | ALM |
| 1.6 i | 20A/BD2 ; 20C/B62/BD2 ; 20D/B62/BD2 ; 741 B66/C66 | E | 1580 | XU5J,XU5J1,XU5JA,XU5M | M | - | TSW | 02/83 ▸ 09/98 | 1300K5 | **810827** | 610 287 | CBS |
| 1.6,1.6 i | 20A/BD2/C27 ; 20C B62/BD2 ; 20D/B62/BA2/BD2 ; 741/A27/B66/C27 C66 | E | 1580 | XU51C,XU5CP,XU5J,XU5J1,XU5JA XU5M | M | | TSW | 02/83 ▸ 09/98 | 1300K6 | **730018** | 610 270 | CBS |
| 1.6,1.6 i | 20A/B14/BD4 ; 20C B14/BD4 | E | 1580 | XU51C,XU52C,XU5M | A | + | TSW | 08/87 ▸ 09/98 | 133035 | **730018** | 610 270 | CBS |
| 1.6 i | 20ABD4 ; 20CBD4 | E | 1580 | XU5M | A | - | TSW | 06/90 ▸ 09/98 | 1300K5 | **810827** | 610 287 | CBS |
| 1.6 | 20CB14 ; 20A/B14 ; 741/A28/C28 | E | 1580 | XU51C,XU52C,XU5CP | A | | TSW | 02/83 ▸ 06/93 | 1300K7 | **810892** | 480 285 | ALM |
| 1.6,1.6 i | 20A/B14/BD4 ; 20C B14/BD4 ; 741/A28/C28 | E | 1580 | XU51C,XU52C,XU5CP,XU5M | A | | TSW | 02/83 ▸ 09/98 | 1300K6 | **730018** | 610 270 | CBS |
| 1.6 | 20CJ22 ; 742C67 | E | 1592 | J2 | M | - | TSW | 07/84 ▸ | 133034 | **730534** | 470 287 | CBS |
| 1.6 | 742C67 | E | 1592 | J2 | M | | TSW | 07/84 ▸ 07/87 | 1300A3 | **730534** | 470 287 | CBS |
| 1.6 | 20CJ22 | E | 1592 | J2 | M | | TSW | 07/89 ▸ 06/93 | 1300J6 | **730534** | 470 287 | CBS |
| 1.8 | 741R76 | E | 1775 | XU8T | M | - | TSW | 1983 ▸ 07/87 | 1300K5 | **810827** | 610 287 | CBS |

# PEUGEOT (.../...)

## 205 (.../...)

| | | | CC | | AC | | | | Valeo | DIM. | TECH |
|---|---|---|---|---|---|---|---|---|---|---|---|
| 1.9 i | 20C/D62/DF2/DK2 ; 20D/DF2/HF2 | E | 1905 | XU9J1,XU9JA,XU9JAZ | M | + | | 08/87 ▸ 09/98 | 133035 | **730018** | 610 270 | CBS |
| 1.9 i | 20C/D62/DF2/DK2 | E | 1905 | XU9JA,XU9JAZ | M | + | TSW | 08/89 ▸ 09/98 | 1300K8 | **730018** | 610 270 | CBS |
| 1.9 i | 20C/D62/DF2/DK2 ; 20D/DF2/HF2 ; 741/B86/C86 | E | 1905 | XU9J1,XU9JA,XU9JAZ | M | - | TSW | 02/83 ▸ 09/98 | 1300K5 | **810827** | 610 287 | CBS |
| 1.9 i | 20C/D62/DF2 | E | 1905 | XU9JA | M | - | TSW | 08/87 ▸ 05/90 | 1300K7 | **810892** | 480 285 | ALM |
| 1.9 i | 20C/D62/DF2/DK2 ; 20D/DF2/HF2 ; 741/B86/C86 | E | 1905 | XU9J1,XU9JA,XU9JAZ | M | | TSW | 02/83 ▸ 09/98 | 1300K6 | **730018** | 610 270 | CBS |
| 1.9 i | 20A/DF4 ; 20C/DF4/DK4 | E | 1905 | XU9JA,XU9JAZ | A | + | TSW | 06/90 ▸ 09/98 | 1300K8 | **730018** | 610 270 | CBS |
| 1.9 i | 20ADF4 ; 20CDK4 | E | 1905 | XU9JA,XU9JAZ | A | + | | 06/90 ▸ 09/98 | 133035 | **730018** | 610 270 | CBS |
| 1.9 i | 20C/DK4 ; 20D/DF4/DK4 | E | 1905 | XU9JA,XU9JAZ | A | - | TSW | 06/90 ▸ 12/94 | 1300K5 | **810827** | 610 287 | CBS |
| 1.9 i | 20A/DF4 ; 20C/DF4/DK4 ; 20D/DF4/DK4 | E | 1905 | XU9JA,XU9JAZ | A | | TSW | 06/90 ▸ 09/98 | 1300K6 | **730018** | 610 270 | CBS |
| 1.7 TD | 20CA82 ; 20SA82<br>20A/A82 | D | 1769 | XUD7T | M | +/- | TSW | 10/90 ▸ 09/98 | 1301C1 | **730898** | 650 303 | CBS |
| 1.7 D,1.7 TD | 20A/A82/A91/A92<br>20C/A82/A91/A92 ; 20TA92 ; 20S/A82/A91/A92 | D | 1769 | XUD7,XUD7T | M | + | TSW | 08/87 ▸ 09/98 | 1300K8 | **730018** | 610 270 | CBS |
| 1.7 D | 20A/A91/A92 ; 20C/A91/A92 ; 20TA92 ; 20S/A91<br>A92 | D | 1769 | XUD7 | M | + | | 07/89 ▸ 09/98 | 133035 | **730018** | 610 270 | CBS |
| 1.7 D | 20A/A91/A92 ; 20C/A91/A92 ; 20TA92 ; 20S/A91<br>A92 ; 741/A90/A98/C90/C98/S90/S98 | D | 1769 | XUD7 | M | - | TSW | 08/83 ▸ 09/98 | 1300K5 | **810827** | 610 287 | CBS |
| 1.7 D | 20A/A91/A92 ; 20C/A91/A92 ; 20S/A91/A92<br>741/A90/A98/C90/C98/S90/S98 | D | 1769 | XUD7 | M | | TSW | 08/83 ▸ 09/98 | 1300K6 | **730018** | 610 270 | CBS |
| 1.9 D | 20CDJ2 ; 20SDJ2 ; 20A/DJ2 | D | 1905 | XUD9 | M | + | TSW | 08/89 ▸ 09/98 | 1300K8 | **730018** | 610 270 | CBS |
| 1.9 D | 20SDJ2 | D | 1905 | XUD9 | M | + | TSW | 08/89 ▸ 09/98 | 133035 | **730018** | 610 270 | CBS |
| 1.9 D | 20CDJ2 ; 20SDJ2 ; 20A/DJ2 | D | 1905 | XUD9 | M | - | TSW | 08/89 ▸ 09/98 | 1300K5 | **810827** | 610 287 | CBS |
| 1.9 D | 20CDJ2 ; 20SDJ2 ; 20A/DJ2 | D | 1905 | XUD9 | M | | TSW | 08/89 ▸ 09/98 | 1300K6 | **730018** | 610 270 | CBS |

## 206

| | | | | | | | | | | | | |
|---|---|---|---|---|---|---|---|---|---|---|---|---|
| 1.1 i | 2AH/FXF/FYE/FZ2/FZE/FZW ; 2CH/FXA/FXF/FYE<br>FZ2/FZE/FZW ; 2SH/FXU/FZW | E | 1124 | TU1JP | M | + | TSW | 09/98 ▸ 03/01 | 1330H5 | **732886** | 380 551,3 | ALM |
| 1.1 i | 2AH/FXA/FXF/FYE/FZ2/FZE/FZW ; 2EHFXF ; 2CH<br>FXA/FXF/FYE/FZ2/FZE/FZW ; 2SH/FXU/FZW | E | 1124 | TU1JP | M | + | TSW | 02/01 ▸ 10/05 | 1330F8 | **732886** | 380 551,3 | ALM |
| 1.1 i | 2AH/FXF/FYE/FZ2/FZE/FZW ; 2EHFXF ; 2CH/FXF<br>FYE/FZ2/FZE/FZW ; 2SH/FXU/FZW | E | 1124 | TU1JP | M | + | TSW | 11/02 ▸ 10/05 | 1330F9 | **732885** | 380 403,3 | ALM |
| 1.1 i | 2AH/FXF/FYE/FZ2/FZE/FZW ; 2CH/FXA/FXF/FYE<br>FZ2/FZE/FZW ; 2SH/FXU/FZW | E | 1124 | TU1JP | M | - | TSW | 09/98 ▸ 03/01 | 1330H2 | **732885** | 380 403,3 | ALM |
| 1.1 i | 2AH/FXA/FXF/FYE/FZ2/FZE/FZW ; 2EHFXF ; 2CH<br>FXA/FXF/FYE/FZ2/FZE/FZW ; 2SH/FXU/FZW | E | 1124 | TU1JP | M | - | TSW | 02/01 ▸ 10/05 | 1330F9 | **732885** | 380 403,3 | ALM |
| 1.1 i | 2AH/FXF/FYE/FZ2/FZE/FZW ; 2EHFXF ; 2CH/FXF<br>FYE/FZ2/FZE/FZW ; 2SH/FXU/FZW | E | 1124 | TU1JP | M | - | TSW | 11/02 ▸ 10/05 | 1330F8 | **732886** | 380 551,3 | ALM |
| 1.1 i | 2AH/FXF/FYE/FZ2/FZE/FZW ; 2CH/FXF/FYE/FZ2<br>FZE/FZW ; 2SH/FXU/FZW<br>▸ 8882 | E | 1124 | TU1JP | M | + | TSW | 09/98 ▸ 03/01 | 133038 | **732886** | 380 551,3 | ALM |
| 1.1 i | 2AH/FXF/FYE/FZ2/FZE/FZW ; 2CH/FXF/FYE/FZ2<br>FZE/FZW ; 2SH/FXU/FZW<br>▸ 8882 | E | 1124 | TU1JP | M | - | TSW | 09/98 ▸ 03/01 | 133037 | **732885** | 380 403,3 | ALM |
| 1.1 i | 2AH/FXF/FYE/FZ2/FZE/FZW ; 2EHFXF ; 2CH/FXF<br>FYE/FZ2/FZE/FZW ; 2SH/FXU/FZW<br>8883 ▸ 9491 | E | 1124 | TU1JP | M | + | TSW | 03/01 ▸ 11/02 | 1330B3 | **732886** | 380 551,3 | ALM |
| 1.1 i | 2AH/FXF/FYE/FZ2/FZE/FZW ; 2EHFXF ; 2CH/FXF<br>FYE/FZ2/FZE/FZW ; 2SH/FXU/FZW<br>8883 ▸ 9491 | E | 1124 | TU1JP | M | - | TSW | 03/01 ▸ 11/02 | 1330B4 | **732885** | 380 403,3 | ALM |
| 1.4 i | 2AK/6C2/6C8/FWF/FXE/FXF/FXW ; 2CK/6C2/FWF<br>FXE/FXW | E | 1360 | TU3JP | M | + | TSW | 09/98 ▸ 03/01 | 1330H5 | **732886** | 380 551,3 | ALM |
| 1.4 i,1.4 i 16V | 2AK/6C2/6C8/FUA/FUF<br>FWF/FXE/FXF/FXW ; 2CK/6C2/FUF/FWF/FXE/FXW<br>2EK/FUF/FWA/FWF ; 2HK/FUA/FUF ; 2KK/FUA/FUF | E | 1360 | ET3J4,TU3JP | M | + | TSW | 09/98 ▸ 02/09 | 1330F8 | **732886** | 380 551,3 | ALM |
| 1.4 i | 2AK/6C2/6C8/FWF/FXE/FXW ; 2CK/6C2/FWF/FXE<br>FXW | E | 1360 | TU3JP | M | + | TSW | 09/98 ▸ | 133038 | **732886** | 380 551,3 | ALM |
| 1.4 i | 2AK/6C2/6C8/FWF ; 2CK/6C2/FWF/FXE ; 2EK/FWA<br>FWF | E | 1360 | TU3JP | M | + | TSW | 11/02 ▸ 02/09 | 1330F9 | **732885** | 380 403,3 | ALM |
| 1.4 i,1.4 i 16V | 2AK/6C2/6C8/FUA/FUF<br>FWA/FWF/FXE/FXF/FXW ; 2DKFWA ; 2CK/6C2/FUF<br>FWA/FWF/FXE/FXW ; 2EK/FUF/FWA/FWF ; 2HK/FUA<br>FUF ; 2KK/FUA/FUF | E | 1360 | ET3J4,TU3A,TU3JP | M | - | TSW | 09/98 ▸ 2010 | 1330F9 | **732885** | 380 403,3 | ALM |
| 1.4 i | 2AK/6C2/6C8/FWF/FXE/FXF/FXW ; 2CK/6C2/FWF<br>FXE/FXW | E | 1360 | TU3JP | M | - | TSW | 09/98 ▸ 03/01 | 1330H2 | **732885** | 380 403,3 | ALM |
| 1.4 i | 2CKFWA ; 2DKFWA ; 2EKFWA ; 2AK/FWA | E | 1360 | TU3A | M | | TSW | 10/05 ▸ 2010 | 1330F8 | **732886** | 380 551,3 | ALM |
| 1.4 i | 2AK/FWR/FX4/FXP ; 2CK/FWR/FXP | E | 1360 | TU3JP | A | + | DN6, TSW | 03/99 ▸ 03/01 | 1330H6 | **732910** | 378,6 562,8 | ALB |
| 1.4 i | 2AK/FWR/FX4/FXP ; 2CK/FWR/FXP | E | 1360 | TU3JP | A | + | DN6, TSW | 03/99 ▸ 11/02 | 1330G1 | **732910** | 378,6 562,8 | ALB |
| 1.4 i | 2AK/FWR/FX4/FXP ; 2CK/FWR/FXP | E | 1360 | TU3JP | A | + | DN6, TSW | 03/99 ▸ 10/04 | 133313 | **732904** | 379 562,5 | ALB |
| 1.4 i | 2AK/FWR/FX4/FXP ; 2CK/FWR/FXP | E | 1360 | TU3JP | A | - | TSW | 03/99 ▸ 03/01 | 1330H5 | **732886** | 380 551,3 | ALM |
| 1.4 i | 2AK/FWR/FX4/FXP ; 2CK/FWR/FXP | E | 1360 | TU3JP | A | - | TSW | 03/99 ▸ 10/04 | 1330F8 | **732886** | 380 551,3 | ALM |

Radiator Ψυγείο Vodní chladič Радиатор vízhűtő Radiador Radiator Radyatör Radiator Radiatore di raffreddamento Motorkühler Radiateur Radiator



• **New** Nouveau **Nuevo** Novo **Nuovo** Nieuw **Neu** Nowość **Yeni** Новый Νέο **Nový**

# PEUGEOT (.../...)

## 206 (.../...)

| Type Ctr. | | | CC | | AC | | | OE | Valeo | DIM. | TECH |
|---|---|---|---|---|---|---|---|---|---|---|---|
| 1.4 i | 2AK/FWR/FX4/FXP ; 2CK/FWR/FXP | E | 1360 | TU3JP | A | - | TSW | 03/01 ▸ | 1330B3 | 732886 | 380 551,3 | ALM |
| 1.4 i | 2AKFWB ; 2CKFWB | E | 1360 | TU3A | A | - | TSW | 05/01 ▸ 02/09 | 1330F9 | 732885 | 380 403,3 | ALM |
| 1.4 i | 2AK/FWR/FX4/FXP ; 2CK/FWR/FXP | E | 1360 | TU3JP | A | - | DN6 LEx+ | 10/04 ▸ 02/09 | 1330F6 | 732893 | 378 562,8 | ALB |
| 1.4 i | 2AKFWB ; 2CKFWB | E | 1360 | TU3A | A | | TSW | 05/01 ▸ 02/09 | 1330F8 | 732886 | 380 551,3 | ALM |
| 1.4 i | 2AK/6C2/6C8/FWF/FXE/FXW ; 2CK/6C2/FWF/FXE FXW<br>▸ 8882 | E | 1360 | TU3JP | M | - | TSW | 09/98 ▸ 03/01 | 133037 | 732885 | 380 403,3 | ALM |
| 1.4 i | 2AK/FWR/FX4/FXP ; 2CK/FWR/FXP<br>▸ 8882 | E | 1360 | TU3JP | A | - | TSW | 03/99 ▸ 03/01 | 133038 | 732886 | 380 551,3 | ALM |
| 1.4 i | 2AK/6C2/6C8/FWF/FXE/FXW ; 2CK/6C2/FWF/FXE FXW ; 2EK/FWA/FWF<br>8883 ▸ 9491 | E | 1360 | TU3JP | M | + | TSW | 03/01 ▸ 11/02 | 1330B3 | 732886 | 380 551,3 | ALM |
| 1.4 i | 2AK/6C2/6C8/FWF/FXE/FXW ; 2CK/6C2/FWF/FXE FXW ; 2EK/FWA/FWF<br>8883 ▸ 9491 | E | 1360 | TU3JP | M | - | TSW | 03/01 ▸ 11/02 | 1330B4 | 732885 | 380 403,3 | ALM |
| 1.4 i | 2AK/FWR/FX4/FXP ; 2CK/FWR/FXP<br>8883 ▸ 9491 | E | 1360 | TU3JP | A | + | DN6, TSW | 03/01 ▸ 11/02 | 1330B0 | 732910 | 378,6 562,8 | ALB |
| 1.6 i | 2AN/FZE/FZW ; 2CN/FZE/FZW | E | 1587 | TU5JP | M | +/- | TSW | 09/98 ▸ 03/01 | 1330H5 | 732886 | 380 551,3 | ALM |
| 1.6 i | 2AN/FZE/FZW ; 2CN/FZE/FZW<br>8883 ▸ | E | 1587 | TU5JP | M | +/- | TSW | 03/01 ▸ | 1330B3 | 732886 | 380 551,3 | ALM |
| 1.6 i | 2AN/FZE/FZW ; 2CN/FZE/FZW | E | 1587 | TU5JP | M | +/- | TSW | 03/01 ▸ 02/09 | 1330F8 | 732886 | 380 551,3 | ALM |
| 1.6 i,1.6 i 16V | 2AN/FUF/FUU/FZE/FZW 2DNFUF ; 2CN/FUF/FUU/FZE/FZW | E | 1587 | TU5JP,TU5JP4 | M | + | DN6, TSW | 09/98 ▸ 03/01 | 1330H6 | 732910 | 378,6 562,8 | ALB |
| 1.6 i,1.6 i 16V | 2AN/FUF/FUU/FZE/FZW 2DNFUF ; 2KNFUF ; 2CN/FUF/FUU/FZE/FZW | E | 1587 | TU5JP,TU5JP4 | M | + | DN6, TSW | 09/00 ▸ 02/09 | 1330G1 | 732910 | 378,6 562,8 | ALB |
| 1.6 i,1.6 i 16V | 2AN/FUF/FUU/FZE/FZW 2DNFUF ; 2KNFUF ; 2CN/FUF/FUU/FZE/FZW<br>8883, 8882 ▸ | E | 1587 | TU5JP,TU5JP4 | M | + | DN6, TSW | 03/01 ▸ | 1330B0 | 732910 | 378,6 562,8 | ALB |
| 1.6 i 16V | 2AN/FUF/FUU ; 2CN FUF/FUU ; 2HNFUA ; 2DN/FU/FUA/FUF ; 2JN/FUA FUF ; 2KN/FUA/FUF | E | 1587 | TU5JP4 | M | + | DN6, TSW | 11/02 ▸ 2010 | 1330G0 | 732904 | 379 562,5 | ALB |
| 1.6 i,1.6 i 16V | 2AN/FUF/FUU/FZE/FZW 2DNFUF ; 2CN/FUF/FUU/FZE/FZW | E | 1587 | TU5JP,TU5JP4 | M | - | TSW | 09/98 ▸ 03/01 | 1330H2 | 732885 | 380 403,3 | ALM |
| 1.6 i 16V | 2AN/FUF/FUU 2DNFUF ; 2CN/FUF/FUU | E | 1587 | TU5JP4 | M | - | TSW | 09/00 ▸ 03/01 | 1330H5 | 732886 | 380 551,3 | ALM |
| 1.6 i,1.6 i 16V | 2AN/FUF/FUU/FZE/FZW 2CN/FUF/FUU/FZE/FZW ; 2HNFUA ; 2DN/FU/FUA FUF ; 2JN/FUA/FUF ; 2KN/FUA/FUF | E | 1587 | TU5JP,TU5JP4 | M | - | TSW | 03/01 ▸ 2010 | 1330F9 | 732885 | 380 403,3 | ALM |
| 1.6 i | 2AN/FZE/FZW ; 2CN/FZE/FZW<br>8883 ▸ | E | 1587 | TU5JP | M | - | TSW | 03/01 ▸ | 1330B4 | 732885 | 380 403,3 | ALM |
| 1.6 i 16V | 2AN/FUF/FUU ; 2CN FUF/FUU ; 2HNFUA ; 2DN/FU/FUA/FUF ; 2JN/FUA FUF ; 2KN/FUA/FUF | E | 1587 | TU5JP4 | M | - | TSW | 03/01 ▸ 2010 | 1330F8 | 732886 | 380 551,3 | ALM |
| 1.6 i 16V | 2CNFUR ; 2DNFUR 2JNFUR ; 2KNFUR ; 2AN/FUR | E | 1587 | TU5JP4 | A | +/- | DN6, TSW | 09/00 ▸ 10/04 | 1330G1 | 732910 | 378,6 562,8 | ALB |
| 1.6 i 16V | 2CNFUR ; 2DNFUR 2AN/FUR | E | 1587 | TU5JP4 | A | +/- | DN6, TSW | 09/00 ▸ 03/01 | 1330H6 | 732910 | 378,6 562,8 | ALB |
| 1.6 i,1.6 i 16V | 2AN/FUR/FZP ; 2CN FUR/FZP ; 2DN/FU/FUB/FUR ; 2HN/FUB/FUR 2KNFUB ; 2JN/FUB/FUR<br>10920, 8883 ▸ | E | 1587 | TU5JP,TU5JP4 | A | +/- | TSW | 03/01 ▸ | 1330F8 | 732886 | 380 551,3 | ALM |
| 1.6 i 16V | 2CNFUR ; 2AN/FUR 2DN/FU/FUB/FUR ; 2HN/FUB/FUR ; 2JN/FUB/FUR 2KN/FUB/FUR | E | 1587 | TU5JP4 | A | +/- | DN6 LEx+ | 04/04 ▸ 2010 | 1330F6 | 732893 | 378 562,8 | ALB |
| 1.6 i 16V | 2CNFUR ; 2AN/FUR 2DN/FU/FUB/FUR ; 2HN/FUB/FUR ; 2KNFUB ; 2JN FUB/FUR | E | 1587 | TU5JP4 | A | +/- | TSW | 01/07 ▸ | 1330S7 | •735597 | 378,6 568,8 | ALB |
| 1.6 i | 2ANFZP ; 2CNFZP | E | 1587 | TU5JP | A | + | DN6, TSW | 03/99 ▸ 10/04 | 1330G1 | 732910 | 378,6 562,8 | ALB |
| 1.6 i | 2ANFZP ; 2CNFZP | E | 1587 | TU5JP | A | + | DN6, TSW | 03/99 ▸ 03/01 | 1330H6 | 732910 | 378,6 562,8 | ALB |
| 1.6 i 16V | 2ANFUR | E | 1587 | TU5JP4 | A | + | DN6, TSW | 03/01 ▸ | 1330B0 | 732910 | 378,6 562,8 | ALB |
| 1.6 i 16V | 2ANFUR | E | 1587 | TU5JP4 | A | - | TSW | 09/00 ▸ 03/01 | 133038 | 732886 | 380 551,3 | ALM |
| 1.6 i 16V | 2ANFUR | E | 1587 | TU5JP4 | A | - | TSW | 03/01 ▸ | 1330B3 | 732886 | 380 551,3 | ALM |
| 1.6 i | 2ANFZP ; 2CNFZP<br>8883 ▸ | E | 1587 | TU5JP | A | - | TSW | 03/01 ▸ 02/09 | 1330F9 | 732885 | 380 403,3 | ALM |
| 1.6 i | 2ANFZP ; 2CNFZP | E | 1587 | TU5JP | A | | DN6, TSW | 03/99 ▸ 03/01 | 1331Y5 | 732910 | 378,6 562,8 | ALB |
| 1.6 i | 2ANFZP ; 2CNFZP | E | 1587 | TU5JP | A | | DN6 LEx+ | 10/04 ▸ 02/09 | 1330F6 | 732893 | 378 562,8 | ALB |

# PEUGEOT (.../...)

## 206 (.../...)

| | | CC | | | AC | | | OE | Valeo | DIM. | TECH |
|---|---|---|---|---|---|---|---|---|---|---|---|
| 1.6 i<br>▸ 8882 | 2AN/FZE/FZW ; 2CN/FZE/FZW | E | 1587 | TU5JP | M | +/- | TSW | 09/98 ▸ 03/01 | 133038 | 732886 | 380 551,3 | ALM |
| 1.6 i 16V<br>▸ 8882 | 2DNFUF | E | 1587 | TU5JP4 | M | + | DN6, TSW | 02/01 ▸ 03/01 | 133053 | 732910 | 378,6 562,8 | ALB |
| 1.6 i<br>▸ 8882 | 2AN/FZE/FZW ; 2CN/FZE/FZW | E | 1587 | TU5JP | M | - | TSW | 09/98 ▸ 03/01 | 133037 | 732885 | 380 403,3 | ALM |
| 1.6 i 16V<br>▸ 8882 | 2AN/FUF/FUU<br>2DNFUF ; 2CN/FUF/FUU | E | 1587 | TU5JP4 | M | - | TSW | 09/00 ▸ 03/01 | 133038 | 732886 | 380 551,3 | ALM |
| 1.6 i<br>▸ 8882 | 2ANFZP ; 2CNFZP | E | 1587 | TU5JP | A | +/- | TSW | 03/99 ▸ 03/01 | 1330H5 | 732886 | 380 551,3 | ALM |
| 1.6 i 16V<br>▸ 8882 | 2CNFUR ; 2DNFUR<br>2AN/FUR | E | 1587 | TU5JP4 | A | +/- | DN6, TSW | 09/00 ▸ 03/01 | 133040 | 732910 | 378,6 562,8 | ALB |
| 1.6 i<br>▸ 8882 | 2ANFZP ; 2CNFZP | E | 1587 | TU5JP | A | - | TSW | 03/99 ▸ 03/01 | 1330H2 | 732885 | 380 403,3 | ALM |
| 1.6 i,1.6 i 16V<br>8883, 8882 ▸ 9491 | 2AN/FUF/FUU/FZE/FZW<br>2DNFUF ; 2KNFUF ; 2CN/FUF/FUU/FZE/FZW | E | 1587 | TU5JP,TU5JP4 | M | + | DN6, TSW | 03/01 ▸ | 1330E8 | 732910 | 378,6 562,8 | ALB |
| 1.6 i 16V<br>▸ 9491 | 2AN/FUF/FUU<br>2DNFUF ; 2KNFUF ; 2CN/FUF/FUU | E | 1587 | TU5JP4 | M | - | TSW | 03/01 ▸ 11/02 | 1330B3 | 732886 | 380 551,3 | ALM |
| 1.6 i 16V<br>8883 ▸ 9491 | 2DNFUR ; 2KNFUR | E | 1587 | TU5JP4 | A | +/- | DN6, TSW | 03/01 ▸ 11/02 | 1330B1 | 732910 | 378,6 562,8 | ALB |
| 2.0 i 16V | 2DRFNF ; 2ERFNF<br>2CR/FKA/FNF/FRE | E | 1997 | EW10J4,EW10J4S | M | +/- | DN6 | 04/99 ▸ 02/09 | 1330G6 | 732906 | 378,6 562,5 | ALB |
| 2.0 i 16V | 2DRFNF ; 2CR/FNF/FRE | E | 1997 | EW10J4 | M | +/- | DN6, TSW | 04/99 ▸ 03/01 | 1330H6 | 732910 | 378,6 562,8 | ALB |
| 2.0 i 16V | 2DRFNF ; 2ERFNF<br>2CR/FNF/FRE | E | 1997 | EW10J4 | M | +/- | DN6, TSW | 10/00 ▸ 09/02 | 1330G1 | 732910 | 378,6 562,8 | ALB |
| 2.0 i 16V<br>9457 ▸ | 2CRFRE | E | 1997 | EW10J4 | M | +/- | DN6, TSW | 09/02 ▸ | 133313 | 732904 | 379 562,5 | ALB |
| 2.0 i 16V | 2DRFNF ; 2CR/FNF/FRE | E | 1997 | EW10J4 | M | + | DN6, TSW | 04/99 ▸ 03/01 | 1331Y5 | 732910 | 378,6 562,8 | ALB |
| 2.0 i 16V | 2CR/FNF/FRE | E | 1997 | EW10J4 | M | + | DN6, TSW | 04/99 ▸ 03/01 | 133040 | 732910 | 378,6 562,8 | ALB |
| 2.0 i 16V | 2DRFNF | E | 1997 | EW10J4 | M | + | DN6, TSW | 09/02 ▸ 11/02 | 1330E8 | 732910 | 378,6 562,8 | ALB |
| 2.0 i 16V | 2DRFNF ; 2ERFNF<br>2CR/FNF | E | 1997 | EW10J4 | M | + | DN6, TSW | 09/02 ▸ 02/09 | 1330G1 | 732910 | 378,6 562,8 | ALB |
| 2.0 i 16V | 2DRFNF ; 2CR/FNF/FRE | E | 1997 | EW10J4 | M | - | DN6, TSW | 03/01 ▸ | 1330E8 | 732910 | 378,6 562,8 | ALB |
| 2.0 i 16V | 2CRFRE | E | 1997 | EW10J4 | M | - | DN6, TSW | 03/01 ▸ | 1330G1 | 732910 | 378,6 562,8 | ALB |
| 2.0 i 16V | 2DRFNF ; 2ERFNF<br>2CR/FNF | E | 1997 | EW10J4 | M | - | DN6, TSW | 09/02 ▸ 02/09 | 133313 | 732904 | 379 562,5 | ALB |
| 2.0 i 16V | 2DRFNF | E | 1997 | EW10J4 | M | | DN6, TSW | 10/00 ▸ 03/01 | 133040 | 732910 | 378,6 562,8 | ALB |
| 2.0 i 16V | 2ERFNF | E | 1997 | EW10J4 | M | | DN6, TSW | 05/02 ▸ 09/02 | 1330B1 | 732910 | 378,6 562,8 | ALB |
| 2.0 i 16V<br>▸ 8729 | 2DRFNF | E | 1997 | EW10J4 | M | - | DN6, TSW | 10/00 ▸ 10/00 | 133053 | 732910 | 378,6 562,8 | ALB |
| 2.0 i 16V<br>8730 ▸ 8882 | 2DRFNF | E | 1997 | EW10J4 | M | | DN6, TSW | 10/00 ▸ 03/01 | 133065 | 732910 | 378,6 562,8 | ALB |
| 2.0 i 16V<br>▸ 9302 | 2CRFRE ; 2DRFNF | E | 1997 | EW10J4 | M | +/- | DN6 | 10/00 ▸ | 1330B2 | 732906 | 378,6 562,5 | ALB |
| 2.0 i 16V<br>8882 ▸ 9456 | 2DRFNF | E | 1997 | EW10J4 | M | + | DN6, TSW | 03/01 ▸ 09/02 | 1330B1 | 732910 | 378,6 562,8 | ALB |
| 2.0 i 16V<br>8883 ▸ 9456 | 2DRFNF ; 2CR/FNF/FRE | E | 1997 | EW10J4 | M | - | DN6, TSW | 03/01 ▸ | 1330B0 | 732910 | 378,6 562,8 | ALB |
| 2.0 i 16V<br>▸ 9491 | 2DRFNF ; 2ERFNF | E | 1997 | EW10J4 | M | +/- | DN6 | 04/02 ▸ 11/02 | 1330F2 | 732906 | 378,6 562,5 | ALB |
| 2.0 i 16V<br>9457 ▸ 9491 | 2DRFNF | E | 1997 | EW10J4 | M | - | DN6, TSW | 09/02 ▸ 11/02 | 1330F3 | 732904 | 379 562,5 | ALB |
| 1.4 HDi | 2A8/HXF/HZA/HZF<br>2C8/HXF/HZA/HZF ; 2S8HXF ; 2E8/HXF/HZA/HZF | D | 1398 | DV4TD | M | +/- | DN6, TSW | 03/02 ▸ 02/09 | 1330G1 | 732910 | 378,6 562,8 | ALB |
| 1.4 HDi | 2C8HXF ; 2E8HXF<br>2A8/HXF | D | 1398 | DV4TD | M | +/- | DN6, TSW | 03/02 ▸ | 1330E8 | 732910 | 378,6 562,8 | ALB |
| 1.4 HDi | 2E8HXF | D | 1398 | DV4TD | M | +/- | DN6, TSW | 05/02 ▸ | 1330B0 | 732910 | 378,6 562,8 | ALB |
| 1.4 HDi | 2A8/HXF/HZA/HZF<br>2C8/HXF/HZA/HZF ; 2S8HXF ; 2E8/HXF/HZA/HZF | D | 1398 | DV4TD | M | +/- | DN6, TSW | 08/02 ▸ 02/09 | 1330G0 | 732904 | 379 562,5 | ALB |
| 1.4 HDi | 2B8/HZA/HZF ; 2S8<br>HZA/HZF | D | 1398 | DV4TD | M | | DN6, TSW | 10/05 ▸ 2010 | 1330G0 | 732904 | 379 562,5 | ALB |
| 1.4 HDi | 2B8/HZA/HZF ; 2S8<br>HZA/HZF | D | 1398 | DV4TD | M | | DN6, TSW | 10/05 ▸ 2010 | 1330G1 | 732910 | 378,6 562,8 | ALB |
| 1.4 HDi<br>▸ 9401 | 2A8HXF ; 2C8HXF | D | 1398 | DV4TD | M | | DN6, TSW | 03/02 ▸ 08/02 | 1330B0 | 732910 | 378,6 562,8 | ALB |

Radiator Radiateur Motorkühler Radiatore di raffreddamento Radiator Radyatör Radiador Радиатор vízhűtő Vodní chladič Radiator Ψυγείο



• **New** Nouveau **Nuevo** Novo **Nuovo** Nieuw **Neu** Nowość **Yeni** Новый Νέο **Nový**

# PEUGEOT (.../...)

## 206 (.../...)

| | | | | | | | | | | | | | |
|---|---|---|---|---|---|---|---|---|---|---|---|---|---|
| 1.9 D | 2AW/JYF/JZT/JZW ; 2CW/JYF/JZT/JZW ; 2SW/JYU JZW ; 2TW/JYU/JZW | D | 1868 | DW8,DW8B | M | +/- | DN6, TSW | 09/98 ▸ 03/01 | 1330H6 | 732910 | 378,6 | 562,8 | ALB |
| 1.9 D | 2AW/JYF/JZT/JZW ; 2CW/JYF/JZT/JZW ; 2SW/JYU JZW ; 2TW/JYU/JZW | D | 1868 | DW8,DW8B | M | +/- | DN6, TSW | 09/98 ▸ 02/09 | 1330G1 | 732910 | 378,6 | 562,8 | ALB |
| 1.9 D | 2AW/JYF/JZT/JZW ; 2CW/JYF/JZT/JZW ; 2SW/JYU JZW ; 2TW/JYU/JZW 88883, 8883 ▸ | D | 1868 | DW8,DW8B | M | +/- | DN6, TSW | 03/01 ▸ | 1330B5 | 732910 | 378,6 | 562,8 | ALB |
| 1.9 D | 2AW/JYF/JZT/JZW ; 2CW/JYF/JZT/JZW ; 2SW/JYU JZW ; 2TW/JYU/JZW | D | 1868 | DW8,DW8B | M | + | DN6, TSW | 09/98 ▸ 02/09 | 1331Y5 | 732910 | 378,6 | 562,8 | ALB |
| 1.9 D | 2CWJYF ; 2SWJYU ; 2TWJYU ; 2AW/JYF/JYU | D | 1868 | DW8B | M | + | DN6, TSW | 10/02 ▸ 02/09 | 1330G1 | 732910 | 378,6 | 562,8 | ALB |
| 1.9 D | 2CWJYF ; 2SWJYU ; 2TWJYU ; 2AW/JYF | D | 1868 | DW8B | M | - | DN6, TSW | 03/01 ▸ | 1330B0 | 732910 | 378,6 | 562,8 | ALB |
| 1.9 D | 2CWJYF ; 2SWJYU ; 2TWJYU ; 2AW/JYF/JYU | D | 1868 | DW8B | M | - | DN6, TSW | 10/02 ▸ 02/09 | 133313 | 732904 | 379 | 562,5 | ALB |
| 1.9 D | 2CWJYF ; 2SWJYU ; 2TWJYU ; 2AW/JYF 9067 ▸ 9491 | D | 1868 | DW8B | M | +/- | DN6, TSW | 09/01 ▸ 11/02 | 1330E8 | 732910 | 378,6 | 562,8 | ALB |
| 2.0 HDi | 2AR/HYE/HYF/HYU 2HRHYF ; 2SRHYE ; 2CR/HYE/HYF/HYU/HYX | D | 1997 | DW10TD | M | +/- | DN6, TSW | 09/99 ▸ 03/01 | 1330H6 | 732910 | 378,6 | 562,8 | ALB |
| 2.0 HDi | 2AR/HYE ; 2SRHYE 2CR/HYE/HYF | D | 1997 | DW10TD | M | +/- | DN6, TSW | 03/01 ▸ 10/05 | 1330G1 | 732910 | 378,6 | 562,8 | ALB |
| 2.0 HDi | 2AR/HYE/HYF/HYU 2ERHYF ; 2HRHYF ; 2JRHYF ; 2KRHYF ; 2SRHYE 2CR/HYE/HYF/HYU/HYX | D | 1997 | DW10TD | M | + | DN6, TSW | 03/01 ▸ 07/06 | 1330G1 | 732910 | 378,6 | 562,8 | ALB |
| 2.0 HDi | 2AR/HYE/HYF/HYU 2SRHYE ; 2CR/HYE/HYF/HYU/HYX | D | 1997 | DW10TD | M | - | DN6, TSW | 03/00 ▸ 10/00 | 1331Y5 | 732910 | 378,6 | 562,8 | ALB |
| 2.0 HDi | 2AR/HYF/HYU 2ERHYF ; 2HRHYF ; 2CR/HYF/HYU/HYX | D | 1997 | DW10TD | M | - | DN6, TSW | 03/01 ▸ 11/02 | 1330G1 | 732910 | 378,6 | 562,8 | ALB |
| 2.0 HDi | 2AR/HYE/HYF/HYU 2ERHYF ; 2HRHYF ; 2KRHYF ; 2SRHYE ; 2CR/HYE HYF/HYU/HYX | D | 1997 | DW10TD | M | - | DN6, TSW | 03/01 ▸ 06/08 | 133313 | 732904 | 379 | 562,5 | ALB |
| 2.0 HDi | 2AR/HYE/HYF/HYU 2ERHYF ; 2KRHYF ; 2SRHYE ; 2CR/HYE/HYF/HYU HYX | D | 1997 | DW10TD | M | +/- | DN6, TSW | 03/01 ▸ 11/02 | 1330B5 | 732910 | 378,6 | 562,8 | ALB |

## 206+ (2009>)

| | | | | | | | | | | | | | |
|---|---|---|---|---|---|---|---|---|---|---|---|---|---|
| 1.1 i | 2LHFXA ; 2MHFXA | E | 1124 | TU1A | M | + | TSW | 03/09 ▸ | 1330F8 | 732886 | 380 | 551,3 | ALM |
| 1.1 i | 2LHFXA ; 2MHFXA | E | 1124 | TU1A | M | - | TSW | 03/09 ▸ | 1330F9 | 732885 | 380 | 403,3 | ALM |
| 1.4 i | 2LKFWA ; 2MKFWA | E | 1360 | TU3A | M | + | TSW | 03/09 ▸ | 1330F8 | 732886 | 380 | 551,3 | ALM |
| 1.4 i | 2LKFWA ; 2MKFWA | E | 1360 | TU3A | M | - | TSW | 03/09 ▸ | 1330F9 | 732885 | 380 | 403,3 | ALM |
| 1.4 HDi | 2L8HZA ; 2M8HZA | D | 1398 | DV4TD | M | + | DN6, TSW | 03/09 ▸ | 1330G1 | 732910 | 378,6 | 562,8 | ALB |
| 1.4 HDi | 2L8HZA ; 2M8HZA | D | 1398 | DV4TD | M | - | DN6, TSW | 03/09 ▸ | 1330G0 | 732904 | 379 | 562,5 | ALB |
| 1.4 HDi | 2L8HZA ; 2M8HZA | D | 1398 | DV4TD | M | | DN6, TSW | 03/09 ▸ | 133313 | 732904 | 379 | 562,5 | ALB |
| 1.4 HDi | 2L8HZA | D | 1398 | DV4TD | M | | DN6, TSW | 04/10 ▸ | 1330G0 | 732904 | 379 | 562,5 | ALB |
| 1.4 HDi | 2L8HZA | D | 1398 | DV4TD | M | | DN6, TSW | 04/10 ▸ | 1330G1 | 732910 | 378,6 | 562,8 | ALB |

## 207

| | | | | | | | | | | | | | |
|---|---|---|---|---|---|---|---|---|---|---|---|---|---|
| 1.4 e | WCKFVC ; WEKFVC ; WAK/FVC | E | 1360 | TU3A | M | +/- | | 03/06 ▸ | 1330C0 | 732831 | 380 | 403,3 | ALM |
| 1.4 e 16V | WAKFUC ; WCKFUC | E | 1360 | ET3J4 | M | + | LEx+ | 03/06 ▸ | 1330S1 | 732930 | 378,6 | 405,5 | ALB |
| 1.4 e 16V | WAKFUC ; WCKFUC | E | 1360 | ET3J4 | M | - | | 03/06 ▸ | 1330C0 | 732831 | 380 | 403,3 | ALM |
| 1.4 VTi 16V | WC8FSC ; WE8FSC WA8/FSC | E | 1397 | EP3 | M | +/- | | 07/07 ▸ | 1330S4 | 735125 | 380 | 414,5 | ALM |
| 1.6 e 16V | WANFUC ; WCNFUC | E | 1587 | TU5JP4 | M | + | LEx+ | 03/06 ▸ | 1330S1 | 732930 | 378,6 | 405,5 | ALB |
| 1.6 e 16V | WANFUC ; WCNFUC | E | 1587 | TU5JP4 | M | - | | 03/06 ▸ | 1330Q0 | 734921 | 380 | 414,5 | ALM |
| 1.6 e 16V | WAN/FUC/FUF | E | 1587 | TU5JP4 | A | + | LEx+ | 03/06 ▸ | 1330S1 | 732930 | 378,6 | 405,5 | ALB |
| 1.6 e 16V | WAN/FUC/FUF | E | 1587 | TU5JP4 | A | - | | 03/06 ▸ | 1330Q0 | 734921 | 380 | 414,5 | ALM |
| 1.6 THP 16V | WB5FXC ; WC5FXC WE5FYC ; WM5FYC ; WA5/FXC | E | 1598 | EP6DT,EP6DTS | M | +/- | | 12/06 ▸ | 1330P8 | 734398 | 378 | 558 | ALB |
| 1.6 VTi 16V,1.6 e 16V | WB5FWC ; WC5FWC WE5FWC ; WA5/FWC | E | 1598 | EP6 | M | + | | 01/07 ▸ | 1330P9 | •735608 | 378 | 536 | ALB |
| 1.6 THP 16V | WM5FYC | E | 1598 | EP6DTS | M | + | | 04/07 ▸ | 1330P8 | 734398 | 378 | 558 | ALB |
| 1.6 VTi 16V,1.6 e 16V | WB5FWC ; WC5FWC WE5FWC ; WA5/FWC | E | 1598 | EP6 | M | - | | 01/07 ▸ | 1330S4 | 735125 | 380 | 414,5 | ALM |
| 1.6 VTi 16V,1.6 e 16V | WB5FWF ; WC5FWF WE5FWF ; WA5/FWF | E | 1598 | EP6 | A | + | | 01/07 ▸ | 1330P9 | •735608 | 378 | 536 | ALB |
| 1.6 VTi 16V,1.6 e 16V | WB5FWF ; WC5FWF WE5FWF ; WA5/FWF | E | 1598 | EP6 | A | - | | 01/07 ▸ | 1330S4 | 735125 | 380 | 414,5 | ALM |
| 1.6 VTi 16V | WC5/FS9 ; WE5/FS9 FWF | E | 1598 | EP6,EP6C | A | + | | 07/07 ▸ | 1330P9 | •735608 | 378 | 536 | ALB |
| 1.4 HDi | WA8HZC ; WC8HZC | D | 1398 | DV4TD | M | +/- | LEx+ | 03/06 ▸ | 1330Q5 | 732930 | 378,6 | 405,5 | ALB |
| 1.4 HDi | WA8HZC ; WC8HZC | D | 1398 | DV4TD | M | + | LEx+ | 03/06 ▸ | 1330Q5 | 732930 | 378,6 | 405,5 | ALB |
| 1.4 HDi 68 | WA8HR0 ; WC8HR0 | D | 1398 | DV4C | M | | LEx+ | 10/10 ▸ | 1330Q5 | 732930 | 378,6 | 405,5 | ALB |

# PEUGEOT (.../...)

## 207 (.../...)

| | | CC | | AC | | | OE | Valeo | DIM. | TECH |
|---|---|---|---|---|---|---|---|---|---|---|
| 1.6 HDi 16V WB9HZC ; WA9/HYC HZC ; WC9/HYC/HZC ; WE9/HYC/HZC | D | 1560 | DV6TED4 | M | +/- | | 03/06 ▸ | 1330P8 | **734398** | 378 558 | ALB |
| 1.6 HDi 16V WC9HXC ; WE9HXC WA9/HXC | D | 1560 | DV6ATED4 | M | +/- | | 03/06 ▸ | 1330P9 | •**735608** | 378 536 | ALB |
| 1.6 HDi 16V WB9HZC ; WA9/HYC HZC ; WC9/HYC/HZC | D | 1560 | DV6TED4 | M | + | | 03/06 ▸ | 1330P8 | **734398** | 378 558 | ALB |
| 1.6 HDi 16V WA9/HVL/HXC/HZC WC9/HVC/HVL/HXC ; WU9HXC ; WE9/HXC/HYC/HZC | D | 1560 | DV6ATED4,DV6TED4,DV6TED4B | M | | | 03/06 ▸ | 1330P8 | **734398** | 378 558 | ALB |
| 1.6 HDi,1.6 HDi 16V WA9/HR8/HVL/HYC/HZC WB9/HR8/HZC ; WC9/HR8/HVL/HYC/HZC ; WE9/HP0 HR8/HXC/HYC/HZC ; WU9/HP0/HR8/HXC | D | 1560 | DV6ATED4,DV6C,DV6DTED,DV6TED4 DV6TED4B | M | +/- | | 03/06 ▸ | 1330P9 | •**735608** | 378 536 | ALB |

## 306 (93>97)

| | | CC | | AC | | | OE | Valeo | DIM. | TECH |
|---|---|---|---|---|---|---|---|---|---|---|
| 1.1 i 7AH/DY2/DZ2 ; 7CH/DY2/DZ2 ; 7SH/DY2/DZ2 | E | 1124 | TU1M,TU1M+ | M | + | TSW | 02/93 ▸ 06/95 | 1331CS | **730630** | 610 377,5 | ALM |
| 1.1 i 7AH/DY2/DZ2 ; 7CH/DY2/DZ2 ; 7SH/DY2/DZ2 | E | 1124 | TU1M,TU1M+ | M | + | TSW | 02/93 ▸ 02/97 | 133045 | **732535** | 610 377,5 | ALM |
| 1.1 i 7CHDZ2 ; 7SHDZ2 ; 7AH/DZ2 | E | 1124 | TU1M,TU1M+ | M | + | TSW | 02/93 ▸ 06/95 | 133195 | **730630** | 610 377,5 | ALM |
| 1.1 i 7AH/DY2/DZ2 ; 7CH/DY2/DZ2 ; 7SH/DY2/DZ2 | E | 1124 | TU1M,TU1M+ | M | - | TSW | 02/93 ▸ 02/97 | 133051 | **732534** | 460 377,5 | ALM |
| 1.1 i 7AH/DY2/DZ2 ; 7CH/DY2/DZ2 ; 7SH/DY2/DZ2 | E | 1124 | TU1M,TU1M+ | M | - | TSW | 02/93 ▸ 02/97 | 1301TG | **816715** | 460 377,5 | ALM |
| 1.4 7BK/2D9/3A2 | E | 1360 | TU3,TU3.2 | M | +/- | TSW | 08/94 ▸ 06/95 | 1331CS | **730630** | 610 377,5 | ALM |
| 1.4,1.4 i 7AK/2D2/DX2/DX9 7BK/2D2/DX2/DX9/FX2 ; 7CK/2D2/DX2/DX9 ; 7SK 2D2/DX2 | E | 1360 | TU3.2,TU3JP,TU3MC | M | + | TSW | 02/93 ▸ 02/97 | 1331CS | **730630** | 610 377,5 | ALM |
| 1.4,1.4 i 7AK/2D2/DX2 ; 7BK 2D2/2D9/FX2 ; 7CK/2D2/DX2 ; 7SK/2D2/DX2 | E | 1360 | TU3.2,TU3JP,TU3MC | M | + | TSW | 02/93 ▸ 02/97 | 133045 | **732535** | 610 377,5 | ALM |
| 1.4 i 7BKDX2 ; 7CKDX2 ; 7SKDX2 ; 7AK/DX2 | E | 1360 | TU3MC | M | + | TSW | 02/93 ▸ 06/95 | 133195 | **730630** | 610 377,5 | ALM |
| 1.4,1.4 i 7AK/2D2/DX2/DX9 7BK/2D2/2D9/3A2/DX2/DX9/FX2 ; 7CK/2D2/DX2 DX9 ; 7SK/2D2/DX2 | E | 1360 | TU3,TU3.2,TU3JP,TU3MC | M | - | TSW | 02/93 ▸ 02/97 | 133051 | **732534** | 460 377,5 | ALM |
| 1.4,1.4 i 7AK/2D2/DX2/DX9 7BK/2D2/2D9/3A2/DX2/DX9/FX2 ; 7CK/2D2/DX2 DX9 ; 7SK/2D2/DX2 | E | 1360 | TU3,TU3.2,TU3JP,TU3MC | M | - | TSW | 02/93 ▸ 02/97 | 1301TG | **816715** | 460 377,5 | ALM |
| 1.4,1.4 i 7AK/3A2/DX9 7CKDX9 ; 7BK/3A2/DX2/DX9 | E | 1360 | TU3,TU3MC | M | | TSW | 02/93 ▸ 02/97 | 133045 | **732535** | 610 377,5 | ALM |
| 1.6 i 7CNFZ2 ; 7DNFZ2 ; 7BN/FZ2/FZ9 | E | 1587 | TU5JP | M | +/- | TSW | 09/93 ▸ 02/97 | 1331CS | **730630** | 610 377,5 | ALM |
| 1.6 i 7AN/FZ2/FZ9 ; 7CNFZ9 ; 7BN/FZ2/FZ9 | E | 1587 | TU5JP | M | + | TSW | 02/93 ▸ 06/95 | 1331CS | **730630** | 610 377,5 | ALM |
| 1.6 i 7AN/FZ2/FZ9 ; 7CN/FZ2/FZ9 | E | 1587 | TU5JP | M | - | TSW | 02/93 ▸ 02/97 | 1301TG | **816715** | 460 377,5 | ALM |
| 1.6 i 7AN/FZ2/FZ9 ; 7CN/FZ2/FZ9 | E | 1587 | TU5JP | M | - | TSW | 02/93 ▸ 02/97 | 133051 | **732534** | 460 377,5 | ALM |
| 1.6 i 7BNFZ2 ; 7CNFZ2 ; 7DNFZ2 ; 7AN/FZ2 | E | 1587 | TU5JP | M | | TSW | 02/93 ▸ 06/95 | 133195 | **730630** | 610 377,5 | ALM |
| 1.6 i 7AN/FZ2/FZ9 ; 7BN/FZ2/FZ9 ; 7DNFZ2 ; 7CN/FZ2 FZ9 | E | 1587 | TU5JP | M | | TSW | 02/93 ▸ 02/97 | 133045 | **732535** | 610 377,5 | ALM |
| 1.8 i 7AL/6A2/6A9/FZ2/FZ8/FZ9 ; 7BL/6A2/6A9/FZ2 FZ8/FZ9 ; 7CL/FZ2/FZ8/FZ9 ; 7DL/6A2/FZ2/FZ8 | E | 1761 | XU7JP | M | +/- | TSW | 02/93 ▸ 11/95 | 1331RY | **730927** | 610 377,5 | ALM |
| 1.8 i 7AL/6A2/6A9/FZ2/FZ8/FZ9 ; 7BL/6A2/6A9/FZ2 FZ8/FZ9 ; 7CL/FZ2/FZ8/FZ9 ; 7DL/6A2/FZ2/FZ8 | E | 1761 | XU7JP | M | +/- | TSW | 06/95 ▸ 02/97 | 1331CS | **730630** | 610 377,5 | ALM |
| 1.8 i 7AL/FZ2/FZ8 ; 7BL/FZ2/FZ8 ; 7CL/FZ2/FZ8 7DL/6A2/FZ8 | E | 1761 | XU7JP | M | | TSW | 11/95 ▸ 02/97 | 1301TV | **816715** | 460 377,5 | ALM |
| 1.8 i 7AL/6A2/6A9/FZ2/FZ8/FZ9 ; 7BL/6A2/6A9/FZ2 FZ8/FZ9 ; 7CL/FZ2/FZ8/FZ9 ; 7DL/6A2/FZ2/FZ8 | E | 1761 | XU7JP | M | | TSW | 11/95 ▸ 02/97 | 133045 | **732535** | 610 377,5 | ALM |
| 1.8 i 7AL/6A4/FZ4 ; 7CLFZ4 ; 7BL/6A4/FZ4 ; 7DL/6A4 FZ4 | E | 1761 | XU7JP | A | +/- | TSW | 06/93 ▸ 11/95 | 1301TL | **730983** | 610 377,5 | ALM |
| 1.8 i 7AL/6A4/FZ4 ; 7CLFZ4 ; 7BL/6A4/FZ4 ; 7DL/6A4 FZ4 | E | 1761 | XU7JP | A | +/- | TSW | 11/95 ▸ 02/97 | 1331CS | **730630** | 610 377,5 | ALM |
| 1.8 i 7DL6A4 | E | 1761 | XU7JP | A | +/- | TSW | 11/95 ▸ 02/97 | 133045 | **732535** | 610 377,5 | ALM |
| 1.8 i 7AL/6A4/FZ4 ; 7CLFZ4 ; 7DLFZ4 ; 7BL/6A4/FZ4 | E | 1761 | XU7JP | A | | TSW | 11/95 ▸ 02/97 | 133045 | **732535** | 610 377,5 | ALM |
| 2.0 i 7AR6D2 | E | 1998 | XU10J2C | M | +/- | TSW | 06/93 ▸ 02/97 | 1331CS | **730630** | 610 377,5 | ALM |
| 2.0 i,2.0 i 16V 7AR/6D2/FT2/FV2/FX2 FX8/FY2 ; 7BR/FX2/FX8 ; 7CR/6D2/FT2/FV2/FX2 FX8/FY2 ; 7DR/6D2/FX2 | E | 1998 | XU10J2,XU10J2C,XU10J4,XU10J4R | M | +/- | TSW | 06/93 ▸ 02/97 | 1301TK | **730985** | 610 377,5 | ALM |
| 2.0 i 7AR/6D2/FT2/FX2/FX8/FY2 ; 7BR/FX2/FX8 7DRFX2 ; 7CR/6D2/FT2/FX2/FX8/FY2 | E | 1998 | XU10J2,XU10J2C,XU10J4 | M | +/- | TSW | 06/93 ▸ 06/95 | 1301L2 | **730985** | 610 377,5 | ALM |
| 2.0 i 7AR/6D2/FX2/FX8 ; 7BR/FX2/FX8 ; 7CR/6D2/FX2 FX8 ; 7DR/6D2/FX2 | E | 1998 | XU10J2,XU10J2C | M | +/- | TSW | 11/95 ▸ 02/97 | 133003 | **731389** | 610 377,5 | ALM |
| 2.0 i 16V 7CRFS2 | E | 1998 | XU10J4RS | M | +/- | TSW | 03/96 ▸ 02/97 | 1331H9 | **731391** | 610 377,5 | ALM |
| 2.0 i 7BRFX8 ; 7AR/6D2/FX2/FX8 ; 7CR/6D2/FX2/FX8 7DR/6D2/FX2 | E | 1998 | XU10J2,XU10J2C | M | | TSW | 06/93 ▸ 02/97 | 133045 | **732535** | 610 377,5 | ALM |
| 2.0 i 7BRFX4 ; 7CRFX4 ; 7DRFX4 ; 7AR/FX4 | E | 1998 | XU10J2,XU10J2C | A | +/- | TSW | 09/93 ▸ 11/95 | 1301TL | **730983** | 610 377,5 | ALM |
| 2.0 i 7BRFX4 ; 7CRFX4 ; 7DRFX4 ; 7AR/FX4 | E | 1998 | XU10J2,XU10J2C | A | +/- | TSW | 11/94 ▸ 02/97 | 1331CS | **730630** | 610 377,5 | ALM |
| 2.0 i 7DRFX4 | E | 1998 | XU10J2 | A | +/- | TSW | 11/95 ▸ 02/97 | 133045 | **732535** | 610 377,5 | ALM |
| 2.0 i 7BRFX4 ; 7CRFX4 ; 7DRFX4 ; 7AR/FX4 | E | 1998 | XU10J2,XU10J2C | A | | TSW | 11/95 ▸ 02/97 | 133045 | **732535** | 610 377,5 | ALM |
| 1.8 D 7CA9A2 ; 7SA9A2 ; 7AA/9A2 | D | 1769 | XUD7 | M | + | TSW | 06/93 ▸ 12/93 | 1301TK | **730985** | 610 377,5 | ALM |

Radiator Radiateur Motorkühler Radiatore di raffreddamento Radyatör Radiator Радиатор Radiador Vodní chladič Radiator Ψυγείο



• **New** Nouveau **Nuevo** Novo **Nuovo** Nieuw **Neu** Nowość **Yeni** Новый Νέο **Nový**

# PEUGEOT (.../...)

## 306 (93>97) (.../...)

| | | | | | | | | | | | | |
|---|---|---|---|---|---|---|---|---|---|---|---|---|
| 1.8 D | 7CA9A2 ; 7SA9A2 ; 7AA/9A2 | D | 1769 | XUD7 | M | + | TSW | 12/93 ▸ 02/97 | 1301JY | **731181** | 610 377,5 | ALM |
| 1.8 D | 7CA9A2 ; 7SA9A2 ; 7AA/9A2 | D | 1769 | XUD7 | M | - | TSW | 06/93 ▸ 12/93 | 1331RY | **730927** | 610 377,5 | ALM |
| 1.8 D | 7CA9A2 ; 7SA9A2 ; 7AA/9A2 | D | 1769 | XUD7 | M | - | TSW | 12/93 ▸ 02/97 | 1301JV | **731010** | 610 377,5 | ALM |
| 1.9 TD | 7AD/8A2/HY2 ; 7CD 8A2/HY2 | D | 1905 | XUD9TE | M | +/- | TSW | 06/93 ▸ 12/93 | 1301L8 | **730984** | 610 377,5 | ALM |
| 1.9 TD | 7AD/8A2/HY2 ; 7BD 8A2/HY2 ; 7CD/8A2/HY2 | D | 1905 | XUD9TE | M | +/- | TSW | 12/93 ▸ 02/97 | 1301KG | **731176** | 610 377,5 | ALM |
| 1.9 D | 7AD/9B2/JY2/JZ2 ; 7CD/9B2/JY2/JZ2 ; 7SD/9B2 JY2/JZ2 | D | 1905 | XUD9,XUD9A | M | + | TSW | 06/93 ▸ 12/93 | 1301TK | **730985** | 610 377,5 | ALM |
| 1.9 D | 7AD/9B2/JY2/JZ2 ; 7BD/9B2/JY2 ; 7CD/9B2/JY2 JZ2 ; 7SD/9B2/JY2/JZ2 | D | 1905 | XUD9,XUD9A | M | + | TSW | 12/93 ▸ 02/97 | 1301JY | **731181** | 610 377,5 | ALM |
| 1.9 D | 7AD/9B2/JY2/JZ2 ; 7CD/9B2/JY2/JZ2 ; 7SD/9B2 JY2/JZ2 | D | 1905 | XUD9,XUD9A | M | - | TSW | 06/93 ▸ 12/93 | 1331RY | **730927** | 610 377,5 | ALM |
| 1.9 D | 7AD/9B2/JY2/JZ2 ; 7BD/9B2/JY2 ; 7CD/9B2/JY2 JZ2 ; 7SD/9B2/JY2/JZ2 | D | 1905 | XUD9,XUD9A | M | - | TSW | 12/93 ▸ 02/97 | 1301JV | **731010** | 610 377,5 | ALM |

## 306 (97>2002)

| | | | | | | | | | | | | |
|---|---|---|---|---|---|---|---|---|---|---|---|---|
| 1.4 | 7AK5A2 ; 7CK5A2 | E | 1360 | TU3.2 | M | +/- | TSW | 03/97 ▸ 02/02 | 133045 | **732535** | 610 377,5 | ALM |
| 1.4,1.4 i,1.4 i GPL | 7AK/FWF/FXE/FXT/FXW 7BK/5A2/FWF/FXE/FXT/FXW ; 7CK/FWF/FXE/FXT FXW ; 7SKFXE ; 7EK/FWF/FXE/FXT/FXW | E | 1360 | TU3.2,TU3JP | M | + | TSW | 03/97 ▸ 03/02 | 1331CS | **730630** | 610 377,5 | ALM |
| 1.4 i,1.4 i GPL | 7AK/FXE/FXT 7CKFXE ; 7BK/FXE/FXT ; 7SKFXE ; 7EK/FXE/FXT | E | 1360 | TU3JP | M | + | TSW | 03/97 ▸ 09/98 | 1301TV | **816715** | 460 377,5 | ALM |
| 1.4,1.4 i,1.4 i GPL | 7AK/FWF/FXE/FXT/FXW 7BK/5A2/FWF/FXE/FXT/FXW ; 7CK/FWF/FXE/FXT FXW ; 7SKFXE ; 7EK/FWF/FXE/FXT/FXW | E | 1360 | TU3.2,TU3JP | M | + | TSW | 03/97 ▸ 02/02 | 133045 | **732535** | 610 377,5 | ALM |
| 1.4 i,1.4 i GPL | 7AK/FWF/FXE/FXT/FXW 7BK/FWF/FXE/FXT/FXW ; 7CK/FWF/FXE/FXT/FXW 7SKFXE ; 7EK/FWF/FXE/FXT/FXW | E | 1360 | TU3JP | M | - | TSW | 03/97 ▸ 03/02 | 133051 | **732534** | 460 377,5 | ALM |
| 1.4 | 7EK5A2 | E | 1360 | TU3.2 | M | - | TSW | 04/97 ▸ 03/02 | 133045 | **732535** | 610 377,5 | ALM |
| 1.6 i | 7AN/FTF/FZE/FZW ; 7CNFZE ; 7BN/FTF/FZ8/FZE FZW ; 7DN/FTF/FZE ; 7EN/FTF/FZE/FZW | E | 1587 | TU5JP,TU5JP+ | M | + | TSW | 03/97 ▸ 03/01 | 133045 | **732535** | 610 377,5 | ALM |
| 1.6 i | 7AN/FTF/FZE/FZW ; 7CNFZE ; 7BN/FTF/FZ8/FZE FZW ; 7DN/FTF/FZE ; 7EN/FTF/FZE/FZW | E | 1587 | TU5JP,TU5JP+ | M | + | TSW | 03/97 ▸ 03/02 | 1331CS | **730630** | 610 377,5 | ALM |
| 1.6 i | 7BNFZE ; 7CNFZE ; 7DNFZE ; 7ENFZE ; 7AN/FZE | E | 1587 | TU5JP,TU5JP+ | M | + | TSW | 03/97 ▸ 09/98 | 1301TV | **816715** | 460 377,5 | ALM |
| 1.6 i | 7AN/FTF/FZE/FZW ; 7CNFZE ; 7BN/FTF/FZ8/FZE FZW ; 7DN/FTF/FZE ; 7EN/FTF/FZE/FZW | E | 1587 | TU5JP,TU5JP+ | M | - | TSW | 03/97 ▸ 09/02 | 133051 | **732534** | 460 377,5 | ALM |
| 1.6 i | 7BNFTR ; 7DNFTR ; 7ENFTR ; 7AN/FTR | E | 1587 | TU5JP | A | +/- | PIP+ Plug + | 01/00 ▸ 09/02 | 133049 | **732520** | 610 366 | CBS |
| 1.6 i | 7ENFZP | E | 1587 | TU5JP | A | | PIP+ Plug + | 04/97 ▸ 03/02 | 133049 | **732520** | 610 366 | CBS |
| 1.8 i 16V,1.8 i GPL 16V | 7AL/FYE/FYT/FYW 7CLFYE ; 7DLFYT ; 7BL/FYE/FYT/FYW ; 7EL/FYE FYT/FYW | E | 1761 | XU7JP4 | M | +/- | TSW | 03/97 ▸ 09/99 | 1331CS | **730630** | 610 377,5 | ALM |
| 1.8 i 16V,1.8 i GPL 16V | 7AL/FYE/FYT/FYW 7CLFYE ; 7BL/FYE/FYT/FYW ; 7DL/FYE/FYT 7EL/FYE/FYT/FYW | E | 1761 | XU7JP4 | M | +/- | TSW | 03/97 ▸ 09/98 | 133045 | **732535** | 610 377,5 | ALM |
| 1.8 i 16V,1.8 i GPL 16V | 7AL/FYE/FYF/FYT/FYW 7BL/FYE/FYF/FYT/FYW ; 7CL/FYE/FYF ; 7DL/FYE FYT ; 7EL/FYE/FYF/FYT/FYW | E | 1761 | XU7JP4 | M | +/- | PIP+ Plug + | 09/98 ▸ 09/02 | 133049 | **732520** | 610 366 | CBS |
| 1.8 i | 7AL/6A2 ; 7CL6A2 ; 7EL6A2 ; 7BL/6A2/FZW | E | 1761 | XU7JP | M | + | TSW | 03/97 ▸ 03/01 | 1331CS | **730630** | 610 377,5 | ALM |
| 1.8 i | 7AL/6A2 ; 7CL6A2 ; 7DL6A2 ; 7EL6A2 ; 7BL/6A2 FZW | E | 1761 | XU7JP | M | + | TSW | 03/97 ▸ 03/01 | 133045 | **732535** | 610 377,5 | ALM |
| 1.8 i | 7AL/6A2 ; 7CL6A2 ; 7DL6A2 ; 7EL6A2 ; 7BL/6A2 FZW | E | 1761 | XU7JP | M | - | TSW | 03/97 ▸ 09/02 | 133045 | **732535** | 610 377,5 | ALM |
| 1.8 i | 7AL/6A2 ; 7CL6A2 ; 7DL6A2 ; 7EL6A2 ; 7BL/6A2 FZW | E | 1761 | XU7JP | M | - | TSW | 03/97 ▸ 09/02 | 1331CS | **730630** | 610 377,5 | ALM |
| 1.8 i 16V,1.8 i GPL 16V | 7AL/FYE/FYT 7CLFYE ; 7BL/FYE/FYT ; 7EL/FYE/FYT | E | 1761 | XU7JP4 | M | | TSW | 03/97 ▸ 09/98 | 1301TV | **816715** | 460 377,5 | ALM |
| 1.8 i 16V | 7DLFYF | E | 1761 | XU7JP4 | M | | PIP+ Plug + | 10/00 ▸ 09/02 | 133049 | **732520** | 610 366 | CBS |
| 1.8 i | 7AL/6A4/FZP ; 7CLFZP ; 7DLFZP ; 7ELFZP ; 7BL 6A4/FZ4/FZP | E | 1761 | XU7JP | A | +/- | PIP+ Plug + | 03/97 ▸ 09/02 | 133046 | **732520** | 610 366 | CBS |
| 1.8 i | 7EL6A4 | E | 1761 | XU7JP | A | +/- | TSW | 04/97 ▸ 03/02 | 133045 | **732535** | 610 377,5 | ALM |
| 1.8 i | 7EL6A4 | E | 1761 | XU7JP | A | | PIP+ Plug + | 04/97 ▸ 03/02 | 133046 | **732520** | 610 366 | CBS |
| 2.0 i 16V | 7CRFSH | E | 1998 | XU10J4RS | M | +/- | TSW | 03/97 ▸ 09/98 | 1331H9 | **731391** | 610 377,5 | ALM |
| 2.0 i 16V | 7BRFVE ; 7AR/FVE 7CR/6E2/FVE ; 7ERFVE ; 7DR/6E2/FVE | E | 1998 | XU10J4R | M | +/- | PIP+ Plug + | 03/97 ▸ 09/02 | 133049 | **732520** | 610 366 | CBS |
| 2.0 i 16V | 7CRFSH | E | 1998 | XU10J4RS | M | | TSW | 03/97 ▸ 02/02 | 1331H9 | **731391** | 610 377,5 | ALM |

# PEUGEOT (.../...)

## 306 (97>2002) (.../...)

| Type Ctr. | | CC | | AC | | | OE | Valeo | DIM. | TECH |
|---|---|---|---|---|---|---|---|---|---|---|
| 2.0 i 16V 7AR/FVP ; 7CRFVP 7BR/FVP/FVW ; 7DR/FVP/FVW ; 7ER/FVP/FVW | E | 1998 | XU10J4R | A | + | QC+, TSW | 03/97 ▸ 09/02 | 133076 | **734445** | 610 366 | CBS |
| 2.0 i 16V 7BR/FVP/FVW ; 7DR FVP/FVW ; 7ER/FVP/FVW | E | 1998 | XU10J4R | A | + | PIP+ Plug + | 07/99 ▸ 09/02 | 133046 | **732520** | 610 366 | CBS |
| 2.0 i 16V 7AR/FVP ; 7CRFVP 7BR/FVP/FVW ; 7DR/FVP/FVW ; 7ER/FVP/FVW | E | 1998 | XU10J4R | A | - | PIP+ Plug + | 03/97 ▸ 07/99 | 133046 | **732520** | 610 366 | CBS |
| 2.0 i 16V 7ARFVW | E | 1998 | XU10J4R | A | | PIP+ Plug + | 07/98 ▸ 07/99 | 133046 | **732520** | 610 366 | CBS |
| 2.0 i 16V 7ARFVW | E | 1998 | XU10J4R | A | | QC+, TSW | 07/99 ▸ 02/02 | 133076 | **734445** | 610 366 | CBS |
| 1.8 D 7SA9AE | D | 1769 | XUD7 | M | + | TSW | 03/97 ▸ 09/98 | 1331Q7 | **731743** | 670 377,5 | ALM |
| 1.8 D 7CA9AT ; 7SA9AE ; 7AA/9AT | D | 1769 | XUD7 | M | + | TSW | 03/97 ▸ 09/98 | 133024 | **731743** | 670 377,5 | ALM |
| 1.8 D 7CA9AT ; 7SA9AE ; 7AA/9AT | D | 1769 | XUD7 | M | + | TSW | 03/97 ▸ 01/99 | 133042 | **732577** | 670 377,5 | ALM |
| 1.8 D 7CA9AT ; 7SA9AE ; 7AA/9AT | D | 1769 | XUD7 | M | + | TSW | 01/99 ▸ 02/02 | 133058 | **732620** | 668,8 377,5 | ALB |
| 1.8 D 7SA9AE | D | 1769 | XUD7 | M | - | TSW | 03/97 ▸ 09/98 | 1331S0 | **731744** | 670 377 | ALM |
| 1.8 D 7CA9AT ; 7SA9AE ; 7AA/9AT | D | 1769 | XUD7 | M | - | PIP+ TSW | 03/97 ▸ 02/02 | 133041 | **732517** | 670 377,5 | ALM |
| 1.8 D 7CA9AT ; 7SA9AE ; 7AA/9AT | D | 1769 | XUD7 | M | - | TSW | 03/97 ▸ 09/98 | 133023 | **731744** | 670 377 | ALM |
| 1.9 D 7AW/JYF/JZT ; 7BW/JYF/JZT ; 7CW/JYF/JZT 7SWJYF ; 7EW/JYF/JZT | D | 1868 | DW8,DW8B | M | + | TSW | 11/98 ▸ 07/01 | 133058 | **732620** | 668,8 377,5 | ALB |
| 1.9 D 7BWJZT ; 7CWJZT ; 7EWJZT ; 7AW/JZT | D | 1868 | DW8 | M | + | TSW | 11/98 ▸ 01/99 | 1331CW | **732577** | 670 377,5 | ALM |
| 1.9 D 7AW/JYF/JZT ; 7BW/JYF/JZT ; 7CW/JYF/JZT 7SWJYF ; 7EW/JYF/JZT | D | 1868 | DW8,DW8B | M | + | TSW | 07/01 ▸ 03/02 | 1330E2 | **734456** | 669 365 | ALB |
| 1.9 D 7AW/JYF/JZT ; 7BW/JYF/JZT ; 7CW/JYF/JZT 7SWJYF ; 7EW/JYF/JZT | D | 1868 | DW8,DW8B | M | - | PIP+ TSW | 11/98 ▸ 07/01 | 133041 | **732517** | 670 377,5 | ALM |
| 1.9 D 7AW/JYF/JZT ; 7BW/JYF/JZT ; 7CW/JYF/JZT 7SWJYF ; 7EW/JYF/JZT | D | 1868 | DW8,DW8B | M | - | PIP+ TSW | 07/01 ▸ 03/02 | 1330E1 | **732517** | 670 377,5 | ALM |
| 1.9 SD,1.9 TD 7AD/8AD/HVE/HYE 7BD/8AD/HVE/HYE ; 7CD/HVE/HYE ; 7ED/HVE/HYE | D | 1905 | XUD9BSD,XUD9TE | M | + | TSW | 03/97 ▸ 03/02 | 133055 | **732518** | 670 366 | CBS |
| 1.9 D,1.9 SD 7AD/9BD/HVE/JYE/JYT 7BD/9BD/HVE/JYE/JYT ; 7CD/HVE/JYE/JYT ; 7ED 9BD/JYE/JYT ; 7SD/JYE/JYT | D | 1905 | XUD9A,XUD9BSD | M | + | TSW | 03/97 ▸ 02/02 | 1331CW | **732577** | 670 377,5 | ALM |
| 1.9 D,1.9 SD 7AD/9BD/HVE/JYE/JYT 7BD/9BD/HVE/JYE/JYT ; 7CD/HVE/JYE/JYT ; 7ED 9BD/HVE/JYE/JYT ; 7SD/JYE/JYT | D | 1905 | XUD9A,XUD9BSD | M | + | TSW | 03/97 ▸ 02/02 | 133042 | **732577** | 670 377,5 | ALM |
| 1.9 D 7AD/9BD/JYE/JYT ; 7CDJYE ; 7BD/9BD/JYE/JYT 7ED/9BD/JYE/JYT ; 7SD/JYE/JYT | D | 1905 | XUD9A | M | + | TSW | 03/97 ▸ 09/98 | 133024 | **731743** | 670 377,5 | ALM |
| 1.9 D 7AD/JYE/JYT ; 7CDJYE ; 7BD/JYE/JYT ; 7ED/JYE JYT ; 7SD/JYE/JYT | D | 1905 | XUD9A | M | + | TSW | 03/97 ▸ 09/98 | 1331Q7 | **731743** | 670 377,5 | ALM |
| 1.9 D 7AD/9BD/JYE/JYT ; 7BD/9BD/JYE/JYT ; 7CD/JYE JYT ; 7ED/9BD/JYE/JYT ; 7SD/JYE/JYT | D | 1905 | XUD9A | M | + | TSW | 07/98 ▸ 03/02 | 133058 | **732620** | 668,8 377,5 | ALB |
| 1.9 D 7ED/9BD/JYE | D | 1905 | XUD9A | M | + | TSW | 01/99 ▸ 03/02 | 133052 | **732564** | 460 377 | ALM |
| 1.9 D,1.9 SD 7AD/9BD/HVE/JYE/JYT 7BD/9BD/HVE/JYE/JYT ; 7CD/HVE/JYE/JYT ; 7ED 9BD/HVE/JYE/JYT ; 7SD/JYE/JYT | D | 1905 | XUD9A,XUD9BSD | M | - | PIP+ TSW | 03/97 ▸ 03/02 | 133041 | **732517** | 670 377,5 | ALM |
| 1.9 D,1.9 SD 7AD/9BD/HVE/JYE/JYT 7BD/9BD/HVE/JYE/JYT ; 7CD/HVE/JYE ; 7ED/9BD HVE/JYE/JYT ; 7SD/JYE/JYT | D | 1905 | XUD9A,XUD9BSD | M | - | TSW | 03/97 ▸ 09/98 | 133023 | **731744** | 670 377 | ALM |
| 1.9 D 7AD/JYE/JYT ; 7CDJYE ; 7BD/JYE/JYT ; 7ED/JYE JYT ; 7SD/JYE/JYT | D | 1905 | XUD9A | M | - | TSW | 03/97 ▸ 09/98 | 1331S0 | **731744** | 670 377 | ALM |
| 1.9 SD,1.9 TD 7AD/8AD/HVE/HYE 7BD/8AD/HVE/HYE ; 7CD/HVE/HYE ; 7ED/HVE/HYE | D | 1905 | XUD9BSD,XUD9TE | M | - | TSW | 03/97 ▸ 02/99 | 133042 | **732577** | 670 377,5 | ALM |
| 1.9 SD,1.9 TD 7AD/8AD/HVE/HYE 7BD/8AD/HVE/HYE ; 7CD/HVE/HYE ; 7ED/HVE/HYE | D | 1905 | XUD9BSD,XUD9TE | M | - | TSW | 03/97 ▸ 09/98 | 133024 | **731743** | 670 377,5 | ALM |
| 1.9 SD,1.9 TD 7AD/HVE/HYE 7CDHYE ; 7EDHYE ; 7BD/HVE/HYE | D | 1905 | XUD9BSD,XUD9TE | M | - | TSW | 03/97 ▸ 09/98 | 1331Q7 | **731743** | 670 377,5 | ALM |
| 1.9 SD,1.9 TD 7AD/8AD/HVE/HYE 7BD/8AD/HVE/HYE ; 7CD/HVE/HYE ; 7ED/HVE/HYE | D | 1905 | XUD9BSD,XUD9TE | M | - | TSW | 03/99 ▸ 03/02 | 133058 | **732620** | 668,8 377,5 | ALB |
| 2.0 HDi 7AR/HYE/HYF 7CRHYE ; 7BR/HYE/HYF ; 7HRHYF ; 7ER/HYE/HYF | D | 1997 | DW10TD | M | +/- | TSW | 03/99 ▸ 03/02 | 1330C9 | **732620** | 668,8 377,5 | ALB |
| 2.0 HDi 7HRHYE ; 7JRHYF | D | 1997 | DW10TD | M | | TSW | 04/99 ▸ 02/02 | 1330C9 | **732620** | 668,8 377,5 | ALB |

## 307(2001>2005)

| | | | | | | | | | | |
|---|---|---|---|---|---|---|---|---|---|---|
| 1.4 i 16V 3CKFUB ; 3EKFUB 3AK/FUB | E | 1360 | ET3J4 | M | +/- | DN6, TSW | 10/03 ▸ 06/05 | 1330F4 | **732892** | 378 562,8 | ALB |
| 1.4 i 16V 3CKFUB ; 3EKFUB 3AK/FUB | E | 1360 | ET3J4 | M | +/- | DN6, TSW | 10/03 ▸ 12/03 | 1330G2 | **732908** | 380 551,3 | ALM |
| 1.4 i 16V 3CKFUB ; 3EKFUB 3AK/FUB | E | 1360 | ET3J4 | M | +/- | | 12/03 ▸ 06/05 | 1330N5 | **734346** | 380 551 | ALM |
| 1.4 i 3CKFWB ; 3EKFWB ; 3AK/6DY/FWB | E | 1360 | TU3JP | M | + | DN6, TSW | 09/01 ▸ 06/05 | 1330G2 | **732908** | 380 551,3 | ALM |
| 1.4 i 3AK/6DY/FWB | E | 1360 | TU3JP | M | + | DN6, TSW | 07/02 ▸ 11/02 | 133083 | **732908** | 380 551,3 | ALM |

Radiator Radiateur Motorkühler Radiatore di raffreddamento Radiator Radyatör Radiator Radiador Радиатор vízhűtő Vodní chladič Radiator Ψυγείο



• **New** Nouveau **Nuevo** Novo **Nuovo** Nieuw **Neu** Nowość **Yeni** Новый Νέο **Novy**

# PEUGEOT (.../...)

## 307(2001>2005) (.../...)

| | | CC | | | AC | | | | OE | Valeo | DIM. | TECH |
|---|---|---|---|---|---|---|---|---|---|---|---|---|
| 1.4 i | 3AK6DY | E | 1360 | TU3JP | M | + | DN6, TSW | 07/02 ▸ 06/05 | 1330F4 | **732892** | 378 562,8 | ALB |
| 1.4 i | 3CKFWB ; 3EKFWB ; 3AK/6DY/FWB | E | 1360 | TU3JP | M | - | DN6, TSW | 07/02 ▸ 06/05 | 1330G2 | **732908** | 380 551,3 | ALM |
| 1.4 i | 3CKFWB ; 3EKFWB ; 3AK/FWB | E | 1360 | TU3JP | M | | DN6, TSW | 07/02 ▸ 06/05 | 1330F4 | **732892** | 378 562,8 | ALB |
| 1.4 i<br>9378 ▸ 9492 | 3CKFWB ; 3AK/6DY/FWB | E | 1360 | TU3JP | M | + | DN6, TSW | 07/02 ▸ 11/02 | 133082 | **732892** | 378 562,8 | ALB |
| 1.4 i<br>9378 ▸ 9492 | 3CKFWB ; 3AK/6DY/FWB | E | 1360 | TU3JP | M | - | DN6, TSW | 07/02 ▸ 11/02 | 133083 | **732908** | 380 551,3 | ALM |
| 1.6 i,1.6 i 16V | 3BNFU ; 3AN/6A5/FUB<br>3ENFUB ; 3HNFUB ; 3CN/6A5/FUB | E | 1587 | TU5JP4 | M | +/- | DN6, TSW | 03/01 ▸ 06/05 | 1330F4 | **732892** | 378 562,8 | ALB |
| 1.6 i,1.6 i 16V | 3BNFU ; 3AN/6A5/FUB<br>3ENFUB ; 3HNFUB ; 3CN/6A5/FUB | E | 1587 | TU5JP4 | M | +/- | DN6, TSW | 03/01 ▸ 06/05 | 1330G2 | **732908** | 380 551,3 | ALM |
| 1.6 i 16V | 3ENFUC ; 3HNFUC | E | 1587 | TU5JP4 | M | | DN6, TSW | 03/02 ▸ 06/05 | 1330F4 | **732892** | 378 562,8 | ALB |
| 1.6 i 16V | 3ENFUC ; 3HNFUC | E | 1587 | TU5JP4 | M | | DN6, TSW | 03/02 ▸ 06/05 | 1330G2 | **732908** | 380 551,3 | ALM |
| 1.6 i 16V | 3CNFUE ; 3ENFUE<br>3HNFUE ; 3AN/FUE | E | 1587 | TU5JP4 | A | +/- | DN6<br>LEx+ | 03/01 ▸ 11/02 | 1330G4 | **732891** | 378 562,5 | ALB |
| 1.6 i 16V | 3CNFUE ; 3ENFUE<br>3HNFUE ; 3AN/FUE | E | 1587 | TU5JP4 | A | +/- | DN6<br>LEx+ | 03/01 ▸ | 133085 | **732891** | 378 562,5 | ALB |
| 1.6 i 16V | 3CNFUE ; 3ENFUE<br>3AN/FUE ; 3HN/FUE/FUN | E | 1587 | TU5JP4 | A | +/- | DN6<br>LEx+ | 11/02 ▸ 06/05 | 1330F6 | **732893** | 378 562,8 | ALB |
| 1.6 i 16V | 3HNFUN | E | 1587 | TU5JP4 | A | | DN6<br>LEx+ | 03/02 ▸ 11/02 | 1330G4 | **732891** | 378 562,5 | ALB |
| 1.6 i,1.6 i 16V<br>▸ 9492 | 3AN/6A5/FUB<br>3ENFUB ; 3HNFUB ; 3CN/6A5/FUB | E | 1587 | TU5JP4 | M | +/- | DN6, TSW | 03/01 ▸ 11/02 | 133083 | **732908** | 380 551,3 | ALM |
| 1.6 i 16V<br>▸ 9492 | 3CNFUE ; 3ENFUE<br>3HNFUE ; 3AN/FUE | E | 1587 | TU5JP4 | A | +/- | DN6, TSW | 03/01 ▸ 11/02 | 133082 | **732892** | 378 562,8 | ALB |
| 1.6 i 16V<br>▸ 9492 | 3HNFUN | E | 1587 | TU5JP4 | A | | DN6, TSW | 03/02 ▸ 11/02 | 1330F4 | **732892** | 378 562,8 | ALB |
| 2.0 i 16V | 3BRFKC | E | 1997 | EW10J4S | M | +/- | DN6<br>LEx+ | 09/03 ▸ 06/05 | 1330G9 | **732894** | 378 562,8 | ALB |
| 2.0 i 16V | 3ERFJC ; 3HRFJC<br>3AR/FJC | E | 1997 | EW10A | M | +/- | | 03/05 ▸ 06/05 | 1330W4 | **734338** | 378,6 568,8 | ALB |
| 2.0 i 16V | 3AR/FN8/FNB ; 3CR<br>FN8/FNB/FNC ; 3ER/FNB/FNC ; 3HR/FNB/FNC | E | 1997 | EW10J4 | M | + | DN6, TSW | 03/01 ▸ 06/05 | 1330F4 | **732892** | 378 562,8 | ALB |
| 2.0 i 16V | 3AR/FN8/FNB ; 3CR<br>FN8/FNB ; 3ER/FNB/FNC ; 3HR/FNB/FNC | E | 1997 | EW10J4 | M | - | DN6, TSW | 03/01 ▸ 07/02 | 1330G3 | **732890** | 378 562,5 | ALB |
| 2.0 i 16V | 3BRFNC ; 3AR/FN8<br>FNB ; 3CR/FN8/FNB/FNC ; 3ER/FNB/FNC ; 3HR<br>FNB/FNC | E | 1997 | EW10J4 | M | - | DN6, TSW | 03/01 ▸ 06/05 | 1330G2 | **732908** | 380 551,3 | ALM |
| 2.0 i 16V | 3BRFNC ; 3AR/FN8<br>FNB ; 3CR/FN8/FNB/FNC ; 3ER/FNB/FNC ; 3HR<br>FNB/FNC | E | 1997 | EW10J4 | M | - | DN6, TSW | 07/02 ▸ 06/05 | 1330F4 | **732892** | 378 562,8 | ALB |
| 2.0 i 16V | 3BRFNF ; 3AR/FNE<br>3CR/FNE/FNF ; 3ER/FNE/FNF ; 3HR/FNE/FNF | E | 1997 | EW10J4 | A | +/- | DN6<br>LEx+ | 03/01 ▸ 06/05 | 1330F7 | **732895** | 378 562,8 | ALB |
| 2.0 i 16V | 3BRFNF ; 3AR/FNE<br>3CR/FNE/FNF ; 3ER/FNE/FNF ; 3HR/FNE/FNF | E | 1997 | EW10J4 | A | +/- | DN6<br>LEx+ | 03/01 ▸ 06/05 | 1330F6 | **732893** | 378 562,8 | ALB |
| 2.0 i 16V | 3ERFJF ; 3HRFJF<br>3AR/FJF | E | 1997 | EW10A | A | +/- | | 03/05 ▸ 06/05 | 1330W4 | **734338** | 378,6 568,8 | ALB |
| 2.0 i 16V<br>▸ 9491 | 3CRFNE ; 3AR/FNE<br>3ER/FNE/FNF ; 3HR/FNE/FNF | E | 1997 | EW10J4 | A | +/- | DN6<br>LEx+ | 03/01 ▸ 11/02 | 133096 | **732895** | 378 562,8 | ALB |
| 2.0 i 16V<br>▸ 9491 | 3CRFNE ; 3HRFNE<br>3AR/FNE | E | 1997 | EW10J4 | A | +/- | DN6<br>LEx+ | 03/01 ▸ 11/02 | 133086 | **732893** | 378 562,8 | ALB |
| 2.0 i 16V<br>▸ 9491 | 3HRFNF ; 3ER/FNE/FNF | E | 1997 | EW10J4 | A | | DN6<br>LEx+ | 03/02 ▸ 11/02 | 133086 | **732893** | 378 562,8 | ALB |
| 1.4 HDi | 3A8/HZB ; 3E8HZB<br>3C8/HZB/HZM | D | 1398 | DV4TD | M | +/- | DN6, TSW | 02/02 ▸ 06/05 | 1330F4 | **732892** | 378 562,8 | ALB |
| 1.4 HDi | 3A8/HZB ; 3C8/HZB<br>HZM | D | 1398 | DV4TD | M | +/- | DN6, TSW | 02/02 ▸ | 133082 | **732892** | 378 562,8 | ALB |
| 1.6 HDi,1.6 HDi 16V | 3A9/HXC/HYB/HZB<br>3C9/HYB/HZB ; 3E9/HYB/HZB ; 3H9/HYB/HZB | D | 1560 | DV6ATED4,DV6TED4 | M | +/- | | 07/04 ▸ 06/05 | 1330F5 | •**735608** | 378 536 | ALB |
| 1.6 HDi,1.6 HDi 16V | 3A9/HXC/HYB/HZB<br>3C9/HYB/HZB ; 3E9/HYB/HZB ; 3H9/HYB/HZB | D | 1560 | DV6ATED4,DV6TED4 | M | +/- | | 07/04 ▸ 06/05 | 1330W2 | **734338** | 378,6 568,8 | ALB |
| 2.0 HDi | 3ERHSB ; 3HRHSB<br>3AR/HSB | D | 1997 | DW10ATED | M | +/- | DN6<br>LEx+ | 09/01 ▸ 06/05 | 1330G8 | **732896** | 378 562,8 | ALB |
| 2.0 HDi 16V | 3CRHRH ; 3ERHRH<br>3HRHRH ; 3AR/HRH | D | 1997 | DW10BTED4 | M | +/- | | 04/04 ▸ 06/05 | 1330F5 | •**735608** | 378 536 | ALB |

# PEUGEOT (.../...)

## 307(2001>2005) (.../...)

| Type Ctr. | | CC | | | AC | | | OE | Valeo | DIM. | TECH |
|---|---|---|---|---|---|---|---|---|---|---|---|
| 2.0 HDi | 3AR/HYB/HYM<br>3ERHYB ; 3HRHYB ; 3CR/HYB/HYM | D | 1997 | DW10TD | M | + | DN6<br>LEx+ | 03/01 ▸ 03/05 | 1330G9 | **732894** | 378 562,8 | ALB |
| 2.0 HDi | 3AR/HYB/HYM<br>3ERHYB ; 3HRHYB ; 3CR/HYB/HYM | D | 1997 | DW10TD | M | - | DN6, TSW | 03/01 ▸ 03/05 | 1330F4 | **732892** | 378 562,8 | ALB |
| 2.0 HDi | 3AR/HYB/HYM<br>3ERHYB ; 3HRHYB ; 3CR/HYB/HYM<br>9491 ▸ | D | 1997 | DW10TD | M | - | DN6, TSW | 11/02 ▸ | 1331LS | **732892** | 378 562,8 | ALB |
| 2.0 HDi | 3CRHSB ; 3ERHSB | D | 1997 | DW10ATED | M | | DN6<br>LEx+ | 09/01 ▸ 06/05 | 1330G8 | **732896** | 378 562,8 | ALB |
| 2.0 HDi 16V | 3CRHRH ; 3ERHRH<br>3HRHRH ; 3AR/HRH | D | 1997 | DW10BTED4 | M | | | 04/04 ▸ 06/05 | 1330W2 | **734338** | 378,6 568,8 | ALB |
| 2.0 HDi | 3AR/HYB/HYM<br>3ERHYB ; 3HRHYB ; 3CR/HYB/HYM<br>▸ 9491 | D | 1997 | DW10TD | M | +/- | DN6, TSW | 03/01 ▸ 11/02 | 133082 | **732892** | 378 562,8 | ALB |
| 2.0 HDi | 3ERHSB ; 3HRHSB<br>3AR/HSB<br>▸ 9491 | D | 1997 | DW10ATED | M | +/- | DN6<br>LEx+ | 09/01 ▸ 11/02 | 1330E0 | **732896** | 378 562,8 | ALB |
| 2.0 HDi | 3AR/HYB/HYM<br>3ERHYB ; 3HRHYB ; 3CR/HYB/HYM<br>▸ 9491 | D | 1997 | DW10TD | M | + | DN6<br>LEx+ | 03/01 ▸ 11/02 | 1330A2 | **732894** | 378 562,8 | ALB |
| 2.0 HDi | 3AR/HYB/HYM<br>3HRHYB ; 3CR/HYB/HYM | D | 1997 | DW10TD | M | - | DN6, TSW | 03/01 ▸ 11/02 | 133082 | **732892** | 378 562,8 | ALB |

## 307 (2005>)

| | | | | | | | | | | | |
|---|---|---|---|---|---|---|---|---|---|---|---|
| 1.6 i 16V | 3ENFUC ; 3HNFUC | F | 1587 | TU5JP4 | M | +/- | DN6, TSW | 07/07 ▸ 11/07 | 1330F4 | **732892** | 378 562,8 | ALB |
| 1.6 i 16V | 3ENFUC ; 3HNFUC | F | 1587 | TU5JP4 | M | | | 07/07 ▸ 06/08 | 1330V5 | •**735090** | 378 562,5 | ALB |
| 1.4 i 16V | 3CKFUC ; 3EKFUC<br>3GKFUC ; 3AK/FUC | E | 1360 | ET3J4 | M | +/- | | 06/05 ▸ 01/08 | 1330N5 | **734346** | 380 551 | ALM |
| 1.4 i 16V | 3CKFUC ; 3EKFUC<br>3GKFUC ; 3AK/FUC | E | 1360 | ET3J4 | M | +/- | | 06/05 ▸ 01/08 | 1330S8 | **735091** | 378,6 562,6 | ALB |
| 1.4 i 16V | 3CKFUC ; 3EKFUC<br>3GKFUC ; 3AK/FUC | E | 1360 | ET3J4 | M | +/- | DN6, TSW | 06/05 ▸ 03/07 | 1330F4 | **732892** | 378 562,8 | ALB |
| 1.4 i 16V | 3CKFUC ; 3EKFUC<br>3GKFUC ; 3AK/FUC | E | 1360 | ET3J4 | M | +/- | | 10/07 ▸ 11/07 | 1330F5 | •**735608** | 378 536 | ALB |
| 1.4 i 16V | 3CKFUC ; 3EKFUC<br>3GKFUC ; 3AK/FUC | E | 1360 | ET3J4 | M | | | 06/05 ▸ 11/07 | 1330W2 | **734338** | 378,6 568,8 | ALB |
| 1.4 i 16V | 3CKFUC ; 3EKFUC<br>3AK/FUC | E | 1360 | ET3J4 | M | | | 06/05 ▸ 01/08 | 1330S8 | **735091** | 378,6 562,6 | ALB |
| 1.6 i 16V | 3BNFUC ; 3CNFUL<br>3ENFUC ; 3HNFUC ; 3AN/FUL | E | 1587 | TU5JP4 | M | +/- | DN6, TSW | 06/05 ▸ 11/07 | 1330F4 | **732892** | 378 562,8 | ALB |
| 1.6 i 16V | 3BNFUC ; 3CNFUL<br>3ENFUC ; 3HNFUC ; 3AN/FUL | E | 1587 | TU5JP4 | M | +/- | DN6, TSW | 06/05 ▸ 10/05 | 1330G2 | **732908** | 380 551,3 | ALM |
| 1.6 i 16V | 3BNFUC ; 3CNFUL<br>3ENFUC ; 3HNFUC ; 3AN/FUL | E | 1587 | TU5JP4 | M | +/- | | 10/05 ▸ 03/09 | 1330V5 | •**735090** | 378 562,5 | ALB |
| 1.6 i 16V | 3CNFUL ; 3ENFUC<br>3HNFUC ; 3AN/FUL | E | 1587 | TU5JP4 | M | | DN6, TSW | 06/05 ▸ 10/05 | 1330G2 | **732908** | 380 551,3 | ALM |
| 1.6 i 16V | 3CNFUF ; 3ENFUF<br>3HNFUF ; 3AN/FUF | E | 1587 | TU5JP4 | A | +/- | DN6<br>LEx+ | 06/05 ▸ 02/07 | 1330F6 | | 378 562,8 | ALB |
| 1.6 i 16V | 3CNFUF ; 3ENFUF<br>3HNFUF ; 3AN/FUF | E | 1587 | TU5JP4 | A | +/- | DN6<br>LEx+ | 06/05 ▸ 02/07 | 1330F6 | **732893** | 378 562,8 | ALB |
| 1.6 i 16V | 3CNFUF ; 3ENFUF<br>3HNFUF ; 3AN/FUF | E | 1587 | TU5JP4 | A | +/- | TSW | 06/05 ▸ 03/07 | 1330S7 | •**735597** | 378,6 568,8 | ALB |
| 1.6 i 16V | 3CNFUF ; 3ENFUF<br>3HNFUF ; 3AN/FUF | E | 1587 | TU5JP4 | A | +/- | | 03/07 ▸ 06/08 | 1330T5 | •**735598** | 378,6 568,8 | ALB |
| 2.0 i 16V | 3BRFJC ; 3CRFJC<br>3ERFJC ; 3HRFJC ; 3AR/FJC | E | 1997 | EW10A | M | +/- | | 06/05 ▸ 03/09 | 1330W4 | **734338** | 378,6 568,8 | ALB |
| 2.0 i 16V | 3BRFKC ; 3CRFKC<br>3AR/FKC | E | 1997 | EW10J4S | M | +/- | DN6<br>LEx+ | 06/05 ▸ 07/07 | 1330G9 | **732894** | 378 562,8 | ALB |
| 2.0 i 16V | 3BRFKC ; 3CRFKC<br>3AR/FKC | E | 1997 | EW10J4S | M | | | 07/07 ▸ 03/09 | 1330W2 | **734338** | 378,6 568,8 | ALB |
| 2.0 i 16V | 3BRFJF ; 3ERFJF<br>3HRFJF ; 3AR/FJF | E | 1997 | EW10A | A | +/- | | 06/05 ▸ 03/09 | 1330W4 | **734338** | 378,6 568,8 | ALB |
| 2.0 i 16V | 3BRFJC ; 3CRFJC<br>3ERFJC ; 3HRFJC ; 3AR/FJC<br>▸ 10996 | E | 1997 | EW10A | M | +/- | | 06/05 ▸ 12/06 | 1330K1 | | 380 562 | ALB |
| 2.0 i 16V | 3BRFJF ; 3ERFJF<br>3HRFJF ; 3AR/FJF<br>▸ 10996 | E | 1997 | EW10A | A | +/- | | 06/05 ▸ 12/06 | 1330K1 | | 380 562 | ALB |

Radiator Radiateur Motorkühler Radiatore di raffreddamento Radiator Radyatör Radiador Радиатор vízhűtő Vodní chladič Radiator Ψυγείο



• **New** Nouveau **Nuevo** Novo **Nuovo** Nieuw **Neu** Nowość **Yeni** Новый Νέο **Novy**

| Type Ctr. | | CC | | AC | | | OE | Valeo | DIM. | TECH |
|---|---|---|---|---|---|---|---|---|---|---|

# PEUGEOT (.../...)

## 307 (2005>) (.../...)

| | | | | | | | | | | | |
|---|---|---|---|---|---|---|---|---|---|---|---|
| 1.6 HDi 16V | 3A9/HV/HV//HXC/HYB HYC/HZB/HZC ; 3C9/HV/HXC/HYB/HZB/HZC ; 3E9 HV/HXC/HYB/HZB/HZC ; 3G9/HXC/HYB ; 3H9/HV HXC/HYB/HZB | D | 1560 | DV6ATED4,DV6TED4 | M | +/- | | 06/05 ▸ | 1330F5 | •735608 | 378 536 | ALB |
| 1.6 HDi 16V | 3C9HXC ; 3E9HXC 3G9HXC ; 3H9HXC ; 3A9/HXC | D | 1560 | DV6ATED4 | M | +/- | | 06/05 ▸ | 1330J7 | •735608 | 378 536 | ALB |
| 1.6 HDi 16V | 3A9/HXC/HYB/HYC/HZB HZC ; 3C9/HXC/HYB/HYC/HZB/HZC ; 3E9/HXC/HYB HYC/HZB/HZC ; 3G9/HXC/HYB ; 3H9/HXC/HYB/HYC HZB | D | 1560 | DV6ATED4,DV6TED4 | M | | | 06/05 ▸ 06/08 | 1330W2 | 734338 | 378,6 568,8 | ALB |
| 2.0 HDi 16V | 3BRHRH ; 3CRHRH 3ERHRH ; 3HRHRH ; 3AR/HRH | D | 1997 | DW10BTED4 | M | +/- | | 06/05 ▸ | 1330F5 | •735608 | 378 536 | ALB |
| 2.0 HDi | 3CRHY ; 3ERHY 3HRHY ; 3AR/HY | D | 1997 | DW10TD | M | +/- | DN6 LEx+ | 12/06 ▸ 06/08 | 1330G9 | 732894 | 378 562,8 | ALB |
| 2.0 HDi 16V | 3BRHRH ; 3CRHRH 3ERHRH ; 3HRHRH ; 3AR/HRH | D | 1997 | DW10BTED4 | M | | | 06/05 ▸ 03/09 | 1330W2 | 734338 | 378,6 568,8 | ALB |
| 2.0 HDi 16V | 3CRHRJ ; 3HRHRJ 3AR/HRJ | D | 1997 | DW10BTED4 | A | +/- | | 12/06 ▸ 12/07 | 1330S5 | 734338 | 378,6 568,8 | ALB |
| 2.0 HDi 16V | 3CRHRJ ; 3HRHRJ 3AR/HRJ | D | 1997 | DW10BTED4 | A | +/- | | 01/08 ▸ | 1330W2 | 734338 | 378,6 568,8 | ALB |
| 2.0 HDi 16V | 3CRHRJ ; 3HRHRJ 3AR/HRJ | D | 1997 | DW10BTED4 | A | | | 12/06 ▸ | 1330W2 | 734338 | 378,6 568,8 | ALB |
| 2.0 HDi 16V | 3CRHRJ ; 3HRHRJ 3AR/HRJ | D | 1997 | DW10BTED4 | A | | | 12/06 ▸ 12/07 | 1330S5 | 734338 | 378,6 568,8 | ALB |

## 308

| | | | | | | | | | | | |
|---|---|---|---|---|---|---|---|---|---|---|---|
| 1.6i 16V | 4CNFUC ; 4HNFUC | F | 1587 | TU5JP4 | M | | | 04/10 ▸ 10/10 | 1330V5 | •735090 | 378 562,5 | ALB |
| 1.4 VTi 16V | 4C8FSC ; 4E8FSC 4A8/FSC | E | 1397 | EP3 | M | + | | 09/07 ▸ | 1330S8 | 735091 | 378,6 562,6 | ALB |
| 1.4 VTi 16V | 4C8FR0 | E | 1397 | EP3C | M | | | 04/10 ▸ | 1330S8 | 735091 | 378,6 562,6 | ALB |
| 1.6 THP 16V,1.6 VTi 16V | 4A5/FWC/FXC/FYH 4E5FWC ; 4C5/FWC/FXC/FYH ; 4H5/FWC/FXH/FYH | E | 1598 | EP6,EP6DT,EP6DTS | M | + | | 09/07 ▸ | 1330S8 | 735091 | 378,6 562,6 | ALB |
| 1.6 THP 156 16V<br>1.6 THP 16V<br>1.6 VTi 120 16V<br>1.6 VTi 16V | 4A5/FXH ; 4B5/FS0 FSC/FV8/FVA/FXH 4C5/FV8/FWC/FXH 4H5/FV8/FWC | E | 1598 | EP6,EP6C,EP6CDT,EP6DT | M | | | 09/07 ▸ | 1330S8 | 735091 | 378,6 562,6 | ALB |
| 1.6 THP 16V | 4C5FYH ; 4H5FYH | E | 1598 | EP6DTS | M | | | 03/08 ▸ | 1330W2 | 734338 | 378,6 568,8 | ALB |
| 1.6 THP 16V,1.6 VTi 16V | 4A5/FTF/FWF 4E5FWF ; 4C5/FTF/FWF ; 4H5/FTF/FWF | E | 1598 | EP6,EP6DT | A | + | | 01/08 ▸ | 1330W2 | 734338 | 378,6 568,8 | ALB |
| 11376 ▸ | | | | | | | | | | | | |
| 1.6 THP 156 16V<br>1.6 THP 16V | 4A5/FTF ; 4B5/FTF FVA ; 4H5FVA ; 4C5 FTF/FVA | E | 1598 | EP6CDT,EP6DT | A | | | 09/07 ▸ | 1330W2 | 734338 | 378,6 568,8 | ALB |
| 1.6 THP 16V | 4C5FTF ; 4H5FTF 4A5/FTF | E | 1598 | EP6DT | A | | | 09/07 ▸ 12/08 | 1330S5 | 734338 | 378,6 568,8 | ALB |
| 1.6 VTi 16V | 4C5FWF ; 4E5FWF 4H5FWF ; 4A5/FWF | E | 1598 | EP6 | A | | | 09/07 ▸ | 1330S8 | 735091 | 378,6 562,6 | ALB |
| 1.6 THP 16V,1.6 VTi 16V | 4A5/FTF/FWF 4E5FWF ; 4C5/FTF/FWF ; 4H5/FTF/FWF | E | 1598 | EP6,EP6DT | A | + | | 09/07 ▸ 12/08 | 1330S5 | 734338 | 378,6 568,8 | ALB |
| ▸ 11375 | | | | | | | | | | | | |
| 1.6 HDi 16V | 4A9/HVC/HXC/HZC/HZH 4C9/HVC/HXC/HZC/HZH | D | 1560 | DV6ATED4,DV6TED4,DV6TED4B | M | + | | 09/07 ▸ 12/07 | 1330S5 | 734338 | 378,6 568,8 | ALB |
| 1.6 HDi 16V | 4A9/HVC/HXC/HZC/HZH 4C9/HVC/HXC/HZC/HZH ; 4E9/HXC/HZH ; 4H9/HXC HZH | D | 1560 | DV6ATED4,DV6TED4,DV6TED4B | M | + | | 01/08 ▸ | 1330W2 | 734338 | 378,6 568,8 | ALB |
| 1.6 HDi,1.6 HDi 16V | 4ARHRJ ; 4B9HR8 4A9/HVC/HXC/HZC/HZH ; 4C9/HR8/HVC/HXC/HZC 4H9/HXC/HZH | D | 1560 | DV6ATED4,DV6C,DV6TED4 DV6TED4B | M | | | 09/07 ▸ | 1330W2 | 734338 | 378,6 568,8 | ALB |
| 1.6 HDi 16V | 4ARHRJ ; 4A9/HVC/HXC HZC ; 4C9/HVC/HXC/HZC | D | 1560 | DV6ATED4,DV6TED4,DV6TED4B | M | | | 09/07 ▸ 12/07 | 1330S5 | 734338 | 378,6 568,8 | ALB |
| 1.6 HDi 92 | 4C9HP0 | D | 1560 | DV6DTED | M | | | 04/10 ▸ | 1330S8 | 735091 | 378,6 562,6 | ALB |
| 2.0 HDi 16V | 4ARHRH ; 4CRHRH | D | 1997 | DW10BTED4 | M | +/- | | 09/07 ▸ 12/07 | 1330S5 | 734338 | 378,6 568,8 | ALB |
| 2.0 HDi 16V | 4ARHRH ; 4CRHRH | D | 1997 | DW10BTED4 | M | + | | 09/07 ▸ 12/07 | 1330S5 | 734338 | 378,6 568,8 | ALB |
| 2.0 HDi 16V | 4CRHRH ; 4HRHRH 4AR/HRH | D | 1997 | DW10BTED4 | M | + | | 01/08 ▸ | 1330W2 | 734338 | 378,6 568,8 | ALB |
| 2.0 HDi 16V | 4ARHRH ; 4CRHRH | D | 1997 | DW10BTED4 | M | | | 09/07 ▸ 12/07 | 1330S5 | 734338 | 378,6 568,8 | ALB |
| 2.0 HDi 16V | 4BRHF8 ; 4AR/HRH 4HRHF8 ; 4CR/HF8/HRH | D | 1997 | DW10BTED4 | M | | | 09/07 ▸ | 1330W2 | 734338 | 378,6 568,8 | ALB |
| 2.0 HDi 16V | 4ARHRJ ; 4CRHRJ | D | 1997 | DW10BTED4 | A | + | | 09/07 ▸ 12/07 | 1330S5 | 734338 | 378,6 568,8 | ALB |

# PEUGEOT (.../...)

## 308 (.../...)

| | | | CC | | | AC | | | OE | Valeo | DIM. | TECH |
|---|---|---|---|---|---|---|---|---|---|---|---|---|
| 2.0 HDi 16V | 4CRHRJ ; 4HRHRJ 4AR/HRJ | D | 1997 | DW10BTED4 | A | + | | 01/08 ▸ | 1330W2 | **734338** | 378,6 568,8 | ALB |
| 2.0 HDi 16V | 4BRHRJ ; 4CRHRJ 4AR/HRJ | D | 1997 | DW10BTED4 | A | | | 09/07 ▸ | 1330W2 | **734338** | 378,6 568,8 | ALB |
| 2.0 HDi 16V | 4ARHRJ ; 4CRHRJ | D | 1997 | DW10BTED4 | A | | | 09/07 ▸ 12/07 | 1330S5 | **734338** | 378,6 568,8 | ALB |

## 309 (85>89)

| | | | | | | | | | | | | |
|---|---|---|---|---|---|---|---|---|---|---|---|---|
| 1.1 | 10A/E11/E12 ; 10C/E11/E12/G10 | E | 1118 | E1 | M | + | TSW | 09/85 ▸ 06/89 | 1300H2 | **730015** | 610 360 | CBS |
| 1.1 | 10A/E11/E12 ; 10C/E11/E12/G10 | E | 1118 | E1 | M | - | TSW | 09/85 ▸ 06/89 | 1300N8 | **816700** | 390 377,5 | ALM |
| 1.1 | 10A/E11/E12 ; 10C/E11/E12/G10 | E | 1118 | E1 | M | - | TSW | 09/85 ▸ 06/89 | 1300N9 | **816555** | 390 377,5 | ALM |
| 1.3 | 10A/G12/G22 ; 10C/D22/G12/G27 ; 10S/E11/E12 G11/G12 | E | 1294 | G1A,G1B,G2,G2S | M | + | TSW | 09/85 ▸ 07/89 | 1300L5 | **730015** | 610 360 | CBS |
| 1.3 | 10CG12 ; 10A/G12 ; 10S/E11/E12/G11/G12 | E | 1294 | G1A,G1B | M | + | TSW | 09/85 ▸ 07/89 | 1300H2 | **730015** | 610 360 | CBS |
| 1.3 | 10A/G12/G22 ; 10C/D22/G12/G27 ; 10S/E11/E12 G11/G12 | E | 1294 | G1A,G1B,G2,G2S | M | - | TSW | 09/85 ▸ 07/89 | 1300N8 | **816700** | 390 377,5 | ALM |
| 1.4 i | 10AKD2 ; 10CKD2 | E | 1360 | TU3M | M | +/- | TSW | > ▸ 07/89 | 1300N1 | **816555** | 390 377,5 | ALM |
| 2963251 ▸ | | | | | | | | | | | | |
| 1.4 | 10A/K12/K22 ; 10C/K12/K22 | E | 1360 | TU3,TU3S | M | + | TSW | 08/88 ▸ 07/89 | 1300N3 | **730015** | 610 360 | CBS |
| 1.4 | 10A/K12/K22 ; 10C/K12/K22 | E | 1360 | TU3,TU3S | M | - | TSW | > ▸ 07/89 | 1300N1 | **816555** | 390 377,5 | ALM |
| 2963251 ▸ | | | | | | | | | | | | |
| 1.4 i | 10AKD2 ; 10CKD2 | E | 1360 | TU3M | M | +/- | TSW | 08/88 ▸ | 1300N9 | **816555** | 390 377,5 | ALM |
| ▸ 2963150 | | | | | | | | | | | | |
| 1.4 i | 10AKD2 ; 10CKD2 | E | 1360 | TU3M | M | +/- | TSW | 08/88 ▸ | 1300N8 | **816700** | 390 377,5 | ALM |
| ▸ 2963150 | | | | | | | | | | | | |
| 1.4 | 10A/K12/K22 ; 10C/K12/K22 | E | 1360 | TU3,TU3S | M | - | TSW | 08/88 ▸ | 1300N9 | **816555** | 390 377,5 | ALM |
| ▸ 2963150 | | | | | | | | | | | | |
| 1.4 | 10A/K12/K22 ; 10C/K12/K22 | E | 1360 | TU3,TU3S | M | - | TSW | 08/88 ▸ | 1300N8 | **816700** | 390 377,5 | ALM |
| ▸ 2963150 | | | | | | | | | | | | |
| 1.5 | 10AY22 | E | 1442 | Y2 | M | + | TSW | 08/86 ▸ 06/89 | 1300L5 | **730015** | 610 360 | CBS |
| 1.6,1.6 i | 10A/B11/B12/B22/B31 B32/B51/B62/BA2 ; 10C/B12/B22/B62/BA2/G22 | E | 1580 | XU51C,XU52C,XU5CPXU5J1,XU5JA | M | + | TSW | 09/85 ▸ 07/89 | 1300L5 | **730015** | 610 360 | CBS |
| 1.6 i | 10AB62 ; 10CB62 | E | 1580 | XU5J1,XU5JA | M | +/- | TSW | 09/85 ▸ 07/89 | 1300G2 | **730015** | 610 360 | CBS |
| 1.6 | 10A/B11/B12/B22/B31/B32/B51/BA2 ; 10C/B12 B22/BA2/G22 | E | 1580 | XU51C,XU52C,XU5CP | M | - | TSW | 09/85 ▸ 04/89 | 1300N8 | **816700** | 390 377,5 | ALM |
| 1.6 | 10CBA2 ; 10A/B12/B51/BA2 | E | 1580 | XU51C,XU52C,XU5CP | M | - | TSW | 09/85 ▸ 04/89 | 1300N9 | **816555** | 390 377,5 | ALM |
| 1.6 | 10A/B12/B22/B51/BA2 ; 10C/B12/B22 | E | 1580 | XU51C,XU52C | M | - | TSW | 08/88 ▸ 07/89 | 1300N1 | **816555** | 390 377,5 | ALM |
| 1.6 | 10A/B14/BA4 ; 10C/B14/BA4 | E | 1580 | XU51C | A | + | TSW | 09/85 ▸ 07/89 | 1300L5 | **730015** | 610 360 | CBS |
| 1.6 | 10A/B14 ; 10C/B14/BA4 | E | 1580 | XU51C | A | +/- | TSW | 09/85 ▸ 07/89 | 1300G2 | **730015** | 610 360 | CBS |
| 1.6 | 10A/B14/BA4 ; 10C/B14/BA4 | E | 1580 | XU51C | A | | TSW | 09/85 ▸ 04/89 | 1300N9 | **816555** | 390 377,5 | ALM |
| 1.6 | 10AJ22 | E | 1592 | J2 | M | + | TSW | 08/86 ▸ 06/89 | 1300L5 | **730015** | 610 360 | CBS |
| 1.9 i | 10A/DD2/DF2/DK2 ; 10C/D62/DD2/DF2 | E | 1905 | XU9JA,XU9JAZ,XU9M | M | +/- | TSW | 09/85 ▸ 07/89 | 1300G2 | **730015** | 610 360 | CBS |
| 1.9,1.9 i | 10A/D22/D62/DD2/DF2 DK2 ; 10C/B62/D22/D62/DD2/DE2/DF2/DK2 | E | 1905 | XU92C,XU9JA,XU9JAZ,XU9M | M | + | TSW | 09/85 ▸ 07/89 | 1300L5 | **730015** | 610 360 | CBS |
| 1.9 | 10AD22 ; 10CD22 | E | 1905 | XU92C | M | - | TSW | 09/85 ▸ 04/89 | 1300N8 | **816700** | 390 377,5 | ALM |
| 1.9 | 10AD22 ; 10CD22 | E | 1905 | XU92C | M | - | TSW | 04/89 ▸ 07/89 | 1300N1 | **816555** | 390 377,5 | ALM |
| 1.9 i | 10CDF4 ; 10A/D64/DF4 | E | 1905 | XU9JA | A | + | TSW | 08/88 ▸ 07/89 | 1300L5 | **730015** | 610 360 | CBS |
| 1.9 i | 10A/D64/DF4 | E | 1905 | XU9JA | A | +/- | TSW | 08/88 ▸ 07/89 | 1300G2 | **730015** | 610 360 | CBS |
| 1.7 D | 10CA92 ; 10SA92 ; 10A/A92 | D | 1769 | XUD7 | M | +/- | TSW | 08/86 ▸ 06/89 | 1301R7 | **730634** | 610 358 | CBS |
| 1.7 D | 10CA92 ; 10SA92 ; 10A/A92 | D | 1769 | XUD7 | M | + | | 08/86 ▸ 06/89 | 1300C3 | | 360 359 | ALM |
| 1.7 D | 10CA92 ; 10SA92 ; 10A/A92 | D | 1769 | XUD7 | M | + | TSW | 08/86 ▸ 06/89 | 1300J4 | **730634** | 610 358 | CBS |
| 1.7 D | 10CA92 ; 10SA92 ; 10A/A92 | D | 1769 | XUD7 | M | | TSW | 08/86 ▸ 06/89 | 1300G2 | **730015** | 610 360 | CBS |
| 1.9 D | 10AD92 | D | 1905 | XUD9 | M | +/- | TSW | 08/86 ▸ 07/89 | 1300G2 | **730015** | 610 360 | CBS |
| 1.9 D | 10A/D92/DJ2 ; 10SD92 ; 10C/D92/DJ2 | D | 1905 | XUD9 | M | + | TSW | 08/86 ▸ 07/89 | 1300J4 | **730634** | 610 358 | CBS |
| 1.9 D | 10A/D92/DJ2 ; 10SD92 ; 10C/D92/DJ2 | D | 1905 | XUD9 | M | + | | 08/86 ▸ 07/89 | 1300C3 | | 360 359 | ALM |

## 309 (89>94)

| | | | | | | | | | | | | |
|---|---|---|---|---|---|---|---|---|---|---|---|---|
| 1.1 | 3CB2A2 ; 3CE1A2 ; 3SE1A2 ; 3AE/1A2 | E | 1118 | E1 | M | +/- | TSW | 07/89 ▸ 07/92 | 1300N8 | **816700** | 390 377,5 | ALM |
| 1.1 | 3CB2A2 ; 3CE1A2 ; 3SE1A2 ; 3AE/1A2 | E | 1118 | E1 | M | +/- | TSW | 08/89 ▸ 07/92 | 1300N9 | **816555** | 390 377,5 | ALM |
| 1.1 | 3CB2A2 ; 3CE1A2 ; 3SE1A2 ; 3AE/1A2 | E | 1118 | E1 | M | + | TSW | 08/89 ▸ 07/92 | 1300H2 | **730015** | 610 360 | CBS |
| 1.1 | 3AE1A2 | E | 1118 | E1 | M | | TSW | 08/89 ▸ 07/92 | 1300N8 | **816700** | 390 377,5 | ALM |
| 1.1 | 3AH/1A1/1A2 ; 3CH/1A1/1A2 ; 3SH/1A1/1A2 | E | 1124 | TU1 | M | + | TSW | 08/89 ▸ 08/93 | 1300N3 | **730015** | 610 360 | CBS |
| 1.1,1.1 i | 3AH/1A1/1A2/DZ2 3CH/1A1/1A2/DZ2 ; 3SH/1A1/1A2 | E | 1124 | TU1,TU1M | M | - | TSW | 08/89 ▸ 08/93 | 1300N1 | **816555** | 390 377,5 | ALM |
| 1.3 | 3CG1A2 ; 3SG1A2 ; 3AG/1A2 | E | 1294 | G1A | M | +/- | TSW | 08/89 ▸ 07/92 | 1300N8 | **816700** | 390 377,5 | ALM |
| 1.3 | 3CG1A2 ; 3SG1A2 ; 3AG/1A2 | E | 1294 | G1A | M | +/- | TSW | 08/89 ▸ 07/92 | 1300N9 | **816555** | 390 377,5 | ALM |
| 1.3 | 3CG1A2 ; 3SG1A2 ; 3AG/1A2 | E | 1294 | G1A | M | + | TSW | 08/89 ▸ 07/92 | 1300H2 | **730015** | 610 360 | CBS |
| 1.4,1.4 i | 3AK/1D2/1G2/2B2/2D2 3AZ/DZ2 ; 3SK1G2 ; 3CK/1D2/1G2/2B2/2D2/DZ2 | E | 1360 | TU3,TU3A,TU3F2,TU3M,TU3S | M | + | TSW | 08/89 ▸ 08/94 | 1300L5 | **730015** | 610 360 | CBS |
| 1.4 | 3AK/1G2/3A1 | E | 1360 | TU3,TU3A | M | + | TSW | 08/90 ▸ 08/93 | 1300N3 | **730015** | 610 360 | CBS |

Radiator Radiateur Motorkühler Radiatore di raffreddamento Radiator Radyatör Radiador Радиатор vízhűtő Vodní chladič Radiator Ψυγείο



• **New** Nouveau **Nuevo** Novo **Nuovo** Nieuw **Neu** Nowość **Yeni** Новый Νέο **Nový**

| Type Ctr. | | CC | | AC | | | | OE | Valeo | DIM. | TECH |
|---|---|---|---|---|---|---|---|---|---|---|---|

# PEUGEOT (.../...)

## 309 (89>94) (.../...)

| | | | | | | | | | | | | | |
|---|---|---|---|---|---|---|---|---|---|---|---|---|---|
| 1.4,1.4 i | 3AK/1D2/1G2/2B2/2D2 3A1/3AZ/DY2/DZ2 ; 3SK1G2 ; 3CK/1D2/1G2/2B2 2D2/DY2/DZ2 | E | 1360 | TU3,TU3A,TU3F2,TU3M,TU3S | M | - | TSW | 08/89 ▸ 08/94 | 1300N1 | **816555** | 390 377,5 | ALM |
| 1.5 | 3AY2A2 | E | 1442 | Y2 | M | + | TSW | 08/89 ▸ 07/92 | 1300L5 | **730015** | 610 360 | CBS |
| 1.6 i | 3AB/DY2/DZ2 ; 3CB/DY2/DZ2 | E | 1580 | XU5M | M | +/- | TSW | 08/89 ▸ 08/93 | 1300N1 | **816555** | 390 377,5 | ALM |
| 1.6,1.6 i | 3CB2B2 ; 3AB/2B2/5A2 6D2/6E2 | E | 1580 | XU52C,XU5JA | M | + | TSW | 08/89 ▸ 08/93 | 1300L5 | **730015** | 610 360 | CBS |
| 1.6 i | 3AB/6D2/6E2 | E | 1580 | XU5JA | M | +/- | TSW | 08/89 ▸ 08/93 | 1300G2 | **730015** | 610 360 | CBS |
| 1.6 | 3CB2B2 ; 3AB/2B2/5A2 | E | 1580 | XU52C | M | - | TSW | 09/89 ▸ 08/93 | 1300N1 | **816555** | 390 377,5 | ALM |
| 1.6 i | 3ABDY4 ; 3CBDY4 | E | 1580 | XU5M | A | +/- | TSW | 08/90 ▸ 08/93 | 1300G2 | **730015** | 610 360 | CBS |
| 1.6 | 3AB/2B4 ; 3CB/2A4/2B4 | E | 1580 | XU52C | A | + | TSW | 08/89 ▸ 01/92 | 1300L5 | **730015** | 610 360 | CBS |
| 1.6 | 3AB2B4 | E | 1580 | XU52C | A | - | TSW | 08/90 ▸ 01/92 | 1300N1 | **816555** | 390 377,5 | ALM |
| 1.6 | 3AJ2A2 | E | 1592 | J2 | M | +/- | TSW | 08/89 ▸ 07/92 | 1300N9 | **816555** | 390 377,5 | ALM |
| 1.6 | 3AJ2A2 | E | 1592 | J2 | M | + | TSW | 08/89 ▸ 07/92 | 1300L5 | **730015** | 610 360 | CBS |
| 1.9,1.9 i,1.9 i 16V | 3AD/KZ2 ; 3CD/2H2 6C2/DZ2/FW2/KZ2 | E | 1905 | XU92C,XU9J4,XU9JAZ,XU9M | M | +/- | TSW | 08/89 ▸ 08/93 | 1300G2 | **730015** | 610 360 | CBS |
| 1.9,1.9 i,1.9 i 16V | 3AD/2A2/2H2/6B2/DZ2 KZ2 ; 3CD/2A2/2H2/6B2/6C2/DZ2/FW2/KZ2 | E | 1905 | XU92C,XU9J4,XU9JA,XU9JAZ,XU9M | M | + | TSW | 08/89 ▸ 08/93 | 1300L5 | **730015** | 610 360 | CBS |
| 1.9 | 3AD/2A2/2H2 ; 3CD/2A2/2H2 | E | 1905 | XU92C | M | - | TSW | 08/89 ▸ 08/93 | 1300N1 | **816555** | 390 377,5 | ALM |
| 1.9 i | 3ADKZ4 ; 3CDFZ4 | E | 1905 | XU9J1,XU9JAZ | A | +/- | TSW | 08/90 ▸ 08/93 | 1300G2 | **730015** | 610 360 | CBS |
| 1.9 i | 3AD/FZ4/KZ4 ; 3CD/FZ4/KZ4 | E | 1905 | XU9J1,XU9JAZ | A | + | TSW | 08/90 ▸ 08/93 | 1300L5 | **730015** | 610 360 | CBS |
| 1.7 D,1.7 TD | 3AA/8B2/9A2/9A9 3SA9A2 ; 3CA/8B2/9A2/9A9 | D | 1769 | XUD7,XUD7T | M | +/- | TSW | 08/89 ▸ 08/94 | 1301R7 | **730634** | 610 358 | CBS |
| 1.7 D | 3AA/9A2/9A9 ; 3SA9A2 ; 3CA/9A2/9A9 | D | 1769 | XUD7 | M | + | TSW | 08/89 ▸ 08/94 | 1300J4 | **730634** | 610 358 | CBS |
| 1.7 D | 3AA/9A2/9A9 ; 3SA9A2 ; 3CA/9A2/9A9 | D | 1769 | XUD7 | M | | TSW | 08/89 ▸ 08/94 | 1300G2 | **730015** | 610 360 | CBS |
| 1.9 D | 3AD/9A2/JZ2 ; 3SD9A2 ; 3CD/9A2/JZ2 | D | 1905 | XUD9 | M | + | TSW | 08/89 ▸ 08/93 | 1300J4 | **730634** | 610 358 | CBS |
| 1.9 D | 3AD/9A2/JZ2 ; 3SD9A2 ; 3CD/9A2/JZ2 | D | 1905 | XUD9 | M | - | TSW | 08/89 ▸ 08/93 | 1300G2 | **730015** | 610 360 | CBS |

## 405 (87>92)

| | | | | | | | | | | | | | |
|---|---|---|---|---|---|---|---|---|---|---|---|---|---|
| 1.4 i GPL | 15BK11 | G | 1360 | TU3-G | M | - | TSW | 06/87 ▸ 06/91 | 1300N4 | **810915** | 460 377,5 | ALM |
| 1.4 | 15B/K11/K12/K21/K22/K31/K32 | E | 1360 | TU3,TU3&3A,TU3.2,TU3A | M | - | TSW | 06/87 ▸ 06/92 | 1300N4 | **810915** | 460 377,5 | ALM |
| 1.6,1.6 i | 15SB22 ; 15B/B12/BD2 | E | 1580 | XU51C,XU52C,XU5M | M | +/- | TSW | 06/87 ▸ 06/92 | 1300N6 | **810919** Cassette | 610 355 | ALB |
| 1.6,1.6 i | 15B/8A2/B12/B22/B32 B52 ; 15E/B12/B22/B32/B52/BD2 | E | 1580 | XU51C,XU52C,XU5CPXU5M | M | + | TSW | 06/87 ▸ 06/92 | 1300N6 | **810919** Cassette | 610 355 | ALB |
| 1.6,1.6 i | 15B/8A2/B12/B22/B32 B52/BD2 | E | 1580 | XU51C,XU52C,XU5CPXU5M | M | - | TSW | 06/87 ▸ 06/92 | 1300N4 | **810915** | 460 377,5 | ALM |
| 1.6,1.6 i | 15SB22 ; 15E/B12/B22 B32/B52/BD2 | E | 1580 | XU51C,XU52C,XU5M | M | | TSW | 06/88 ▸ 06/92 | 1300N4 | **810915** | 460 377,5 | ALM |
| 1.6 | 15EB24 | E | 1580 | XU52C | A | +/- | TSW | 06/88 ▸ 06/92 | 1300N5 | **810955** | 610 359 | ALB |
| 1.6,1.6 i | 15B/B24/BD4 | E | 1580 | XU52C,XU5M | A | +/- | TSW | 07/88 ▸ 06/92 | 1300N6 | **810919** Cassette | 610 355 | ALB |
| 1.6 i | 15EBD4 | E | 1580 | XU5M | A | + | TSW | 06/90 ▸ 06/92 | 1300N6 | **810919** Cassette | 610 355 | ALB |
| 1.6 | 15BB24 | E | 1580 | XU52C | A | - | TSW | 07/88 ▸ 06/92 | 1300N4 | **810915** | 460 377,5 | ALM |
| 1.6 | 15EB24 | E | 1580 | XU52C | A | | TSW | 06/88 ▸ 06/92 | 1300N6 | **810919** Cassette | 610 355 | ALB |
| 1.9,1.9 i,1.9 i 16V | 15B/D27/D62/DD2/DD7 DF2/DK2 ; 15E/D22/D27/D62/DF2 | E | 1905 | XU92C,XU9J1,XU9J2,XU9J4 XU9JAZ,XU9M | M | +/- | TSW | 06/87 ▸ 06/92 | 1300N6 | **810919** Cassette | 610 355 | ALB |
| 1.9 i 16V | 15B/D62/D67/DF2/DF7 15E/D27/D62/DF7 | E | 1905 | XU9J4 | M | + | TSW | 06/87 ▸ | 1300N5 | **810955** | 610 359 | ALB |
| 1.9,1.9 i,1.9 i 16V | 15B/D22/D27/D52/DF2 DK2 ; 15E/D22/D27/D52 | E | 1905 | XU92C,XU9J4,XU9JAZ | M | + | TSW | 06/87 ▸ 06/92 | 1300N6 | **810919** Cassette | 610 355 | ALB |
| 1.9 | 15B/D22/D52 | E | 1905 | XU92C | M | - | TSW | 06/87 ▸ 06/92 | 1300N4 | **810915** | 460 377,5 | ALM |
| 1.9 i 16V | 15B/D62/D67/DF2/DF7 | E | 1905 | XU9J4 | M | - | TSW | 06/87 ▸ 06/92 | 1300N6 | **810919** Cassette | 610 355 | ALB |
| 1.9 i,1.9 i 16V | 15E/D27/DD2/DD7/DF7 DK2 | E | 1905 | XU9J4,XU9JAZ,XU9M | M | | TSW | 06/88 ▸ 06/92 | 1300N6 | **810919** Cassette | 610 355 | ALB |
| 1.9 | 15E/D22/D52 | E | 1905 | XU92C | M | | TSW | 06/88 ▸ 06/92 | 1300N4 | **810915** | 460 377,5 | ALM |
| 1.9,1.9 i | 15B/D24/D54/D64 15E/D24/D54 | E | 1905 | XU92C,XU9J2 | A | +/- | TSW | 06/87 ▸ 06/92 | 1300N6 | **810919** Cassette | 610 355 | ALB |
| 1.9,1.9 i | 15B/D24/D64/DF4 15E/D24/D54/D64/DD2/DF4 | E | 1905 | XU92C,XU9J1,XU9J1A,XU9J2,XU9M | A | + | TSW | 06/87 ▸ 06/92 | 1300N5 | **810955** | 610 359 | ALB |
| 1.9,1.9 i | 15B/D24/DF4/DK4 | E | 1905 | XU92C,XU9J1A,XU9JAZ | A | + | TSW | 06/88 ▸ 06/92 | 1300N6 | **810919** Cassette | 610 355 | ALB |
| 1.9 i | 15E/D64/DD2/DF4/DK4 | E | 1905 | XU9J1,XU9J1A,XU9J2,XU9JAZ XU9M | A | | TSW | 06/88 ▸ 06/92 | 1300N6 | **810919** Cassette | 610 355 | ALB |
| 1.7 TD | 15B/A82/A92/AJ2 15E/A82/A92/AJ2 | D | 1769 | XUD7TE | M | +/- | TSW | > ▸ | 1300N5 | **810955** | 610 359 | ALB |
| 1.7 D | 15SA92 | D | 1769 | XUD7 | M | +/- | TSW | 06/90 ▸ 06/92 | 1301F8 | **730512** | 610 377,5 | ALM |
| 1.7 D | 15SA92 | D | 1769 | XUD7 | M | +/- | TSW | 06/90 ▸ 06/92 | 1300N6 | **810919** Cassette | 610 355 | ALB |
| 1.9 D | 15B/D92/DJ2 ; 15SD92 ; 15E/D92/DJ2 | D | 1905 | XUD9A | M | +/- | TSW | 06/87 ▸ | 1300N6 | **810919** Cassette | 610 355 | ALB |
| 1.9 D | 15ED92 ; 15SD92 ; 15B/D92/DJ2 | D | 1905 | XUD9A | M | +/- | TSW | 06/88 ▸ 06/92 | 1301F8 | **730512** | 610 377,5 | ALM |
| 1.9 D | 15ED92 ; 15SD92 ; 15B/D92 | D | 1905 | XUD9A | M | +/- | TSW | 06/88 ▸ 06/92 | 1300N5 | **810955** | 610 359 | ALB |

# PEUGEOT (.../...)

## 405 (87>92) (.../...)

| Type Ctr. | | CC | | AC | | | OE | Valeo | DIM. | TECH |
|---|---|---|---|---|---|---|---|---|---|---|
| 1.9 D 15B/D92/DJ2 | D | 1905 | XUD9A | M | | TSW | > ▸ 05/89 | 1300N6 | 810919 | 610 355 | ALB |

## 405 (92>96)

| Type Ctr. | | CC | | AC | | | OE | Valeo | DIM. | TECH |
|---|---|---|---|---|---|---|---|---|---|---|
| 1.4,1.4 i 4BK/2D2/DX2 | E | 1360 | TU3.2,TU3M,TU3MC | M | +/- | TSW | 07/92 ▸ 10/95 | 1301E6 | 730572 | 460 377,5 | ALM |
| 1.4,1.4 i 4BK/2D2/DX2 | E | 1360 | TU3.2,TU3M,TU3MC | M | +/- | TSW | 07/92 ▸ 10/95 | 1301G3 | 730575 | 610 377,5 | ALM |
| 1.4,1.4 i 4EK/2D2/DX2 | E | 1360 | TU3.2,TU3M | M | + | TSW | 07/92 ▸ 10/96 | 1301E6 | 730572 | 460 377,5 | ALM |
| 1.4,1.4 i 4EK/2D2/DX2 | E | 1360 | TU3.2,TU3M | M | - | TSW | 07/92 ▸ 10/96 | 1301G3 | 730575 | 610 377,5 | ALM |
| 1.4,1.4 i 4BK/2D2/DX2 ; 4EK 2D2/DX2 | E | 1360 | TU3.2,TU3M,TU3MC | M | | TSW | 07/92 ▸ 10/96 | 1331RK | 730572 | 460 377,5 | ALM |
| 1.6,1.6 i 4BB/2A2/5A2/DY2/FZ2 4EB/2A2/5A2/DY2/FZ2 ; 4SB/DY2/FZ2 | E | 1580 | XU52C,XU5JP,XU5M | M | +/- | TSW | 07/92 ▸ 10/96 | 1301G4 | 730575 | 610 377,5 | ALM |
| 1.6 i 4EBFZ2 ; 4SBFZ2 ; 4BB/FZ2 | E | 1580 | XU5JP | M | +/- | TSW | 07/92 ▸ 10/96 | 1301H9 | 730575 | 610 377,5 | ALM |
| 1.6,1.6 i 4BB/2A2/5A2/DY2 4SB2A2 ; 4EB/5A2/DY2 | E | 1580 | XU52C,XU5M | M | + | TSW | 07/92 ▸ 10/96 | 1301JQ | 730575 | 610 377,5 | ALM |
| 1.6,1.6 i 4EB/2A2/5A2/DY2 4SB/2A2/DY2 | E | 1580 | XU52C,XU5M | M | + | TSW | 07/92 ▸ 10/96 | 1301E6 | 730572 | 460 377,5 | ALM |
| 1.6,1.6 i 4BB/2A2/5A2/DY2/FZ2 4EB/2A2/5A2/DY2/FZ2 ; 4SB/2A2/DY2/FZ2 | E | 1580 | XU52C,XU5JP,XU5M | M | + | TSW | 07/92 ▸ 10/96 | 1301G3 | 730575 | 610 377,5 | ALM |
| 1.6,1.6 i 4BB/2A2/5A2/DY2 4EB/2A2/5A2/DY2 ; 4SB/2A2/DY2 | E | 1580 | XU52C,XU5M | M | - | TSW | 07/92 ▸ 10/96 | 1331RK | 730572 | 460 377,5 | ALM |
| 1.6,1.6 i 4BB/2A2/5A2/DY2 | E | 1580 | XU52C,XU5M | M | - | TSW | 07/92 ▸ 10/95 | 1301E6 | 730572 | 460 377,5 | ALM |
| 1.6,1.6 i 4EB2A2 ; 4SBDY2 | E | 1580 | XU52C,XU5M | M | - | TSW | 07/92 ▸ 10/96 | 1301JQ | 730575 | 610 377,5 | ALM |
| 1.6,1.6 i 4BB/2A4/DY4/FZ4 4EB/2A4/DY4 | E | 1580 | XU52C,XU5JP,XU5M | A | +/- | | 07/92 ▸ 10/96 | 1301G9 | | 610 358 | CBS |
| 1.6,1.6 i 4BB/2A4/DY4/FZ4 4EB/2A4/DY4 | E | 1580 | XU52C,XU5JP,XU5M | A | +/- | TSW | 07/92 ▸ 10/96 | 1301G8 | 730577 | 610 377,5 | ALM |
| 1.6 i 4EBFZ4 | E | 1580 | XU5JP | A | + | TSW | 07/92 ▸ 10/96 | 1301G8 | 730577 | 610 377,5 | ALM |
| 1.6 i 4EBFZ4 | E | 1580 | XU5JP | A | - | | 07/92 ▸ 10/96 | 1301G9 | | 610 358 | CBS |
| 1.6 i 4BBDY4 | E | 1580 | XU5M | A | | TSW | 07/92 ▸ 10/95 | 1331RK | 730572 | 460 377,5 | ALM |
| 1.8 i 4BL/6A2/FZ2 ; 4EL/6A2/FZ2 | E | 1761 | XU7JP,XU7JPPR | M | +/- | TSW | 07/92 ▸ 10/96 | 1301H9 | 730575 | 610 377,5 | ALM |
| 1.8 i 4BL/6A2/FZ2 ; 4EL/6A2/FZ2 | E | 1761 | XU7JP,XU7JPPR | M | + | TSW | 07/92 ▸ 10/96 | 1301G3 | 730575 | 610 377,5 | ALM |
| 1.8 i 4BLFZ4 | E | 1761 | XU7JP | A | +/- | TSW | 07/92 ▸ 10/95 | 1301G8 | 730577 | 610 377,5 | ALM |
| 1.8 i 4ELFZ4 | E | 1761 | XU7JP | A | + | | 07/92 ▸ 10/96 | 1301G9 | | 610 358 | CBS |
| 1.8 i 4ELFZ4 | E | 1761 | XU7JP | A | + | TSW | 07/92 ▸ 10/96 | 1301G8 | 730577 | 610 377,5 | ALM |
| 1.8 i 4BLFZ4 | E | 1761 | XU7JP | A | - | | 07/92 ▸ 10/95 | 1301G9 | | 610 358 | CBS |
| 1.9,1.9 i 4BD/2H2/2H6/2H8/5A2 6D2 ; 4ED/2H2/2H8/5A2 | E | 1905 | XU92C,XU9J2 | M | +/- | TSW | 07/92 ▸ 10/96 | 1301G4 | 730575 | 610 377,5 | ALM |
| 1.9,1.9 i 4BD/2H2/2H6/2H8/5A2 6D2 ; 4ED/2H2/2H8/5A2/6D2 | E | 1905 | XU92C,XU9J2 | M | +/- | TSW | 07/92 ▸ 10/96 | 1301H9 | 730575 | 610 377,5 | ALM |
| 1.9 4ED5A2 ; 4BD/2H2/2H6/5A2 | E | 1905 | XU92C | M | + | TSW | 07/92 ▸ 10/96 | 1301JQ | 730575 | 610 377,5 | ALM |
| 1.9 i 4ED6D2 | E | 1905 | XU9J2 | M | + | TSW | 07/92 ▸ 10/96 | 1301G4 | 730575 | 610 377,5 | ALM |
| 1.9 4BD/2H2/2H6/2H8/5A2 ; 4ED/2H2/2H8/5A2 | E | 1905 | XU92C | M | + | TSW | 07/92 ▸ 10/96 | 1301G3 | 730575 | 610 377,5 | ALM |
| 1.9,1.9 i 4BD/2H8/6D2 ; 4ED 2H2/2H8/6D2 | E | 1905 | XU92C,XU9J2 | M | - | TSW | 07/92 ▸ 10/96 | 1301JQ | 730575 | 610 377,5 | ALM |
| 1.9,1.9 i 4BD/2H4/6D4 | E | 1905 | XU92C,XU9J2 | A | +/- | TSW | 07/92 ▸ 10/95 | 1301G8 | 730577 | 610 377,5 | ALM |
| 1.9 4BD5A4 ; 4ED2H4 | E | 1905 | XU92C | A | + | TSW | 07/92 ▸ 10/96 | 1301G8 | 730577 | 610 377,5 | ALM |
| 1.9,1.9 i 4ED2H4 ; 4BD/2H4/5A4 6D4 | E | 1905 | XU92C,XU9J2 | A | - | | 07/92 ▸ 10/96 | 1301G9 | | 610 358 | CBS |
| 2.0 i Turbo 16S 4BRGZ7 | E | 1998 | XU10J4TE | M | +/- | | 07/92 ▸ 10/95 | 1301P9 | | 610 377,5 | ALB |
| 2.0 i 4BR/FX2/FX7 ; 4ER/6D2/FX2/FX7 | E | 1998 | XU10J2,XU10J2C | M | +/- | TSW | 07/92 ▸ 10/96 | 1301G4 | 730575 | 610 377,5 | ALM |
| 2.0 i 4BRFY2 | E | 1998 | XU10J4 | M | + | TSW | 07/92 ▸ 10/95 | 1301JL | 730953 | 610 367 | CBS |
| 2.0 i 4BR/FX2/FX7 ; 4ER/6D2/FX2/FX7 | E | 1998 | XU10J2,XU10J2C | M | + | TSW | 07/92 ▸ 10/96 | 1301G3 | 730575 | 610 377,5 | ALM |
| 2.0 i 4BRFY2 | E | 1998 | XU10J4 | M | - | TSW | 07/92 ▸ 10/95 | 1301G4 | 730575 | 610 377,5 | ALM |
| 2.0 i 4BR/FX4 ; 4ER/6D4/FX4 | E | 1998 | XU10J2,XU10J2C | A | +/- | TSW | 07/92 ▸ 10/96 | 1301G8 | 730577 | 610 377,5 | ALM |
| 2.0 i 4BR/FX4 ; 4ER/6D4/FX4 | E | 1998 | XU10J2,XU10J2C | A | - | | 07/92 ▸ 10/96 | 1301G9 | | 610 358 | CBS |
| 1.7 TD 15BA82 | D | 1769 | XUD7TE | M | | TSW | 07/93 ▸ 10/95 | 1300N5 | 810955 | 610 359 | ALB |
| 1.9 D 4SD9B2 ; 4ED/9B2/JY2/JZ2 | D | 1905 | XUD9A | M | +/- | TSW | 07/92 ▸ 01/95 | 1301JL | 730953 | 610 367 | CBS |
| 1.9 D 4SD9B2 ; 4ED/9B2/JY2/JZ2 | D | 1905 | XUD9A | M | +/- | TSW | 07/92 ▸ 10/96 | 1301JQ | 730575 | 610 377,5 | ALM |
| 1.9 TD 4BD/8A2/HY2 ; 4ED 8A2/HY2 | D | 1905 | XUD9TE | M | + | TSW | 07/92 ▸ 10/96 | 1301JL | 730953 | 610 367 | CBS |
| 1.9 D 4BD/9B2/JZ2 | D | 1905 | XUD9A | M | | TSW | 07/92 ▸ 10/95 | 1301JQ | 730575 | 610 377,5 | ALM |

## 406 (95>2003)

| Type Ctr. | | CC | | AC | | | OE | Valeo | DIM. | TECH |
|---|---|---|---|---|---|---|---|---|---|---|
| 1.6 i 8BB/FZ2/FZD/FZE | E | 1580 | XU5JP | M | + | TSW | 10/95 ▸ 03/99 | 1301GA | 731381 | 640 414 | ALM |
| 1.6 i 8BB/FZ2/FZD/FZE | E | 1580 | XU5JP | M | - | TSW | 10/95 ▸ 03/99 | 1301GG | 731298 | 610 377,5 | ALM |
| 1.8 i,1.8 i 16V 8CLFYE ; 8BL/6A2/FXE 1.8 i GPL 16V FY2/FY8/FYD/FYE/FYS FYT/FYW ; 8EL/6A2/FXE/FYE/FYT/FYW ; 8FL/FXE FYE/FYT | E | 1761 | XU7JB,XU7JP,XU7JP4 | M | + | TSW | 10/95 ▸ 03/99 | 1301GA | 731381 | 640 414 | ALM |

Radiator Radiateur Motorkühler Radiatore di raffreddamento Radiator Radyatör Radiador Радиатор vízhűtő Vodní chladič Radiator Ψυγείο



• **New** Nouveau **Nuevo** Novo **Nuovo** Nieuw **Neu** Nowość **Yeni** Новый Νέο **Nový**

## 406 (95>2003) (.../...)

| | | CC | | AC | | | | OE | Valeo | DIM. | TECH |
|---|---|---|---|---|---|---|---|---|---|---|---|
| 1.8 i,1.8 i 16V<br>1.8 i GPL 16V | 8CLFYE ; 8BL/6A2/FXE<br>FY2/FY8/FYD/FYE/FYS<br>FYT/FYW ; 8EL/6A2/FXE/FYE/FYT/FYW ; 8FL/FXE<br>FYE/FYT | E | 1761 | XU7JB,XU7JP,XU7JP4 | M | - | TSW | 10/95 ▸ 03/99 | 1301GG | **731298** | 610 377,5 | ALM |
| 1.8 i 16V | 8ELFYP ; 8FLFYP<br>8BL/FYP | E | 1761 | XU7JP4 | A | + | TSW | 07/96 ▸ 03/99 | 1301FP | **731384** | 640 414 | ALM |
| 1.8 i 16V | 8ELFYP ; 8FLFYP<br>8BL/FYP | E | 1761 | XU7JP4 | A | - | TSW | 07/96 ▸ 03/99 | 1301FN | **731383** | 640 414 | ALM |
| 2.0 i 16V | 8CR/FNA/FRE/FRF | E | 1997 | EW10J4 | M | +/- | | 05/99 ▸ 04/03 | 1330H9 | **734411** | 410 694 | |
| 2.0 i 16V | 8BR/6E2/FV2/FVD/FVE<br>FVW ; 8CR/FV2/FVE ; 8FRFVE ; 8ER/6E2/FVE/FVW | E | 1998 | XU10J4R | M | + | TSW | 10/95 ▸ 03/99 | 1301GE | **731382** | 640 414 | ALM |
| 2.0 i 16V | 8BR/6E2/FV2/FVD/FVE<br>FVW ; 8CR/FV2/FVE ; 8FRFVE ; 8ER/6E2/FVE/FVW | E | 1998 | XU10J4R | M | - | TSW | 10/95 ▸ 03/99 | 1301GG | **731298** | 610 377,5 | ALM |
| 2.0 i Turbo | 8BR/GX2/GXE | E | 1998 | XU10J2TE | M | - | TSW | 07/96 ▸ 03/99 | 1301SJ | **731289** | 640 414,5 | ALM |
| 2.0 i Turbo | 8ERGXE ; 8BR/GX2/GXE | E | 1998 | XU10J2TE | M | - | TSW | 07/96 ▸ 03/99 | 1301SG | **731289** | 640 414,5 | ALM |
| 2.0 i 16V | 8BR/6E4/FV4/FVN/FVP<br>8CR/FV8/FVP/FVT ; 8FRFVP ; 8ER/6E2/FVP | E | 1998 | XU10J4R | A | + | TSW | 10/95 ▸ 03/99 | 1301FP | **731384** | 640 414 | ALM |
| 2.0 i 16V | 8BR/6E4/FV4/FVN/FVP<br>8CR/FV8/FVP/FVT ; 8FRFVP ; 8ER/6E2/FVP | E | 1998 | XU10J4R | A | - | TSW | 10/95 ▸ 03/99 | 1301FN | **731383** | 640 414 | ALM |
| 2.2 i 16V | 8C3FZA | E | 2230 | EW12J4 | M | | PIP+ | 03/02 ▸ 04/03 | 1331EE | **732599** | 378,6 562,5 | ALB |
| 3.0 i V6 24V | 8EXFZP | E | 2946 | ES9J4 | A | +/- | | 11/96 ▸ 03/99 | 133027 | **731586** | 398 640 | CBS |
| 3.0 i V6 24V | 8BX/FZ4/FZP ; 8CX<br>FX3/FX6/FXB/FXR/FZ4/FZP | E | 2946 | ES9J4,ES9J4S | A | + | | 10/96 ▸ | 133027 | **731586** | 398 640 | CBS |
| 1.9 TD | 8BD/8B/8B2/8BD/HVF<br>HX2/HXE ; 8FDHXE ; 8ED/8BD/HX2/HXE | D | 1905 | XUD9BSD,XUD9BTF,XUD9TE | M | + | TSW | 11/95 ▸ 03/99 | 1301Z6 | **731289** | 640 414,5 | ALM |
| 1.9 TD | 8EDHWE ; 8FDHWE<br>8BD/HVF/HWE | D | 1905 | XUD9BSD,XUD9SD | M | + | TSW | 07/96 ▸ 03/99 | 133015 | **731575** | 640 414 | ALM |
| 1.9 TD | 8BD/8B/8B2/8BD/HVF<br>HX2/HXE ; 8FDHXE ; 8ED/8BD/HX2/HXE | D | 1905 | XUD9BSD,XUD9BTF,XUD9TE | M | - | TSW | 11/95 ▸ 03/99 | 1301SJ | **731289** | 640 414,5 | ALM |
| 1.9 TD | 8EDHWE ; 8FDHWE<br>8BD/HVF/HWE | D | 1905 | XUD9BSD,XUD9SD | M | - | TSW | 07/96 ▸ 03/99 | 133014 | **731574** | 640 414 | ALM |
| 1.9 TD | 8EDHXP ; 8FDHXP<br>8BD/HXP | D | 1905 | XUD9BTF | A | + | TSW | 03/97 ▸ 03/99 | 1301Z8 | **731289** | 640 414,5 | ALM |
| 1.9 TD | 8EDHXP ; 8FDHXP<br>8BD/HXP | D | 1905 | XUD9BTF | A | - | TSW | 03/97 ▸ 03/99 | 1301SJ | **731289** | 640 414,5 | ALM |
| 2.0 HDi | 8ERHZE ; 8FRHZE | D | 1997 | DW10ATED | M | +/- | | 10/98 ▸ 03/99 | 133044 | **732567** | 633 413,7 | ALB |
| 2.0 HDi | 8BRHZE | D | 1997 | DW10ATED | M | + | | 10/98 ▸ 03/99 | 133044 | **732567** | 633 413,7 | ALB |
| 2.1 TD | 8EP8CE ; 8FP8CE<br>8BP/8C2/8CD/8CE | D | 2088 | XUD11BTE | M | + | TSW | 11/95 ▸ 03/99 | 1301Z8 | **731289** | 640 414,5 | ALM |
| 2.1 TD | 8EP8CE ; 8FP8CE<br>8BP/8C2/8CD/8CE | D | 2088 | XUD11BTE | M | - | TSW | 11/95 ▸ 03/99 | 1301SG | **731289** | 640 414,5 | ALM |
| 2.2 HDi 16V | 8C4HXF | D | 2179 | DW12TED4 | M | + | | 01/01 ▸ 04/03 | 133044 | **732567** | 633 413,7 | ALB |

## 406 (99>2004)

| | | | | | | | | | | | | |
|---|---|---|---|---|---|---|---|---|---|---|---|---|
| 1.6 i | 8BBFZE | E | 1580 | XU5JP | M | + | TSW | 04/99 ▸ 03/04 | 1301GA | **731381** | 640 414 | ALM |
| 1.8 i 16V | 8E6FZF ; 8F6FZF<br>8B6/FZF | E | 1749 | EW7J4 | M | +/- | | 10/00 ▸ 04/04 | 133068 | **734278** | 380 550 | ALB |
| 1.8 i GPL 16V | 8B6FZF ; 8E6FZF | E | 1749 | EW7J4 | M | | | 10/01 ▸ 04/04 | 133068 | **734278** | 380 550 | ALB |
| 1.8 i GPL 16V | 8BLFYE | E | 1761 | XU7JP4 | M | + | TSW | 04/99 ▸ 03/04 | 1301FP | **731384** | 640 414 | ALM |
| 1.8 i,1.8 i 16V<br>1.8 i GPL 16V | 8BL/6A2/FXE/FYE/FYF<br>FYT/FYW ; 8EL/FXE<br>FYE/FYT ; 8FL/FXE/FYE | E | 1761 | XU7JB,XU7JP,XU7JP4 | M | + | TSW | 04/99 ▸ 04/04 | 1301GA | **731381** | 640 414 | ALM |
| 1.8 i GPL 16V | 8BLFYE | E | 1761 | XU7JP4 | M | - | TSW | 04/99 ▸ 03/04 | 1301FN | **731383** | 640 414 | ALM |
| 1.8 i 16V | 8BL/FYP ; 8FLFYP<br>8EL/FYP/FYR | E | 1761 | XU7JP4 | A | + | TSW | 04/99 ▸ 04/04 | 1301FP | **731384** | 640 414 | ALM |
| 1.8 i 16V | 8BL/FYP ; 8FLFYP<br>8EL/FYP/FYR | E | 1761 | XU7JP4 | A | - | TSW | 04/99 ▸ 04/04 | 1301FN | **731383** | 640 414 | ALM |
| 2.0 i 16V | 8BR/FNA/FRE ; 8ER<br>FNA/FRE ; 8FR/FNA/FRE | E | 1997 | EW10J4 | M | +/- | | 04/99 ▸ 04/04 | 1331FT | **732598** | 379 562,5 | ALB |
| 2.0 16V | 8CRFNR | E | 1997 | EW10J4 | M | | | 05/03 ▸ 10/04 | 1330H9 | **734411** | 410 694 | |
| 2.0 i 16V | 8ERFNR ; 8BR/FNR/FRR | E | 1997 | EW10J4 | A | +/- | | 06/99 ▸ | 133064 | **734279** | 542 580 | ALB |
| 2.0 i 16V | 8ERFNR ; 8BR/FNR/FRR | E | 1997 | EW10J4 | A | +/- | | 06/99 ▸ 04/04 | 1330R2 | **734279** | 542 580 | ALB |
| 2.0 i 16V | 8FRFNR | E | 1997 | EW10J4 | A | | | 06/01 ▸ 04/04 | 1330R2 | **734279** | 542 580 | ALB |
| 2.0 i 16V | 8ERFV2 ; 8BR/FV2/FVW | E | 1998 | XU10J4R | M | + | TSW | 04/99 ▸ 04/04 | 1301GE | **731382** | 640 414 | ALM |
| 2.0 i 16V | 8ERFV4 ; 8BR/FV4/FVT | E | 1998 | XU10J4R | A | + | TSW | 04/99 ▸ 04/04 | 1301FP | **731384** | 640 414 | ALM |
| 2.2 i 16V | 8B3/FZE/FZF ; 8E3<br>FZE/FZF | E | 2230 | EW12J4 | M | +/- | PIP+ | 05/00 ▸ 04/04 | 1331EE | **732599** | 378,6 562,5 | ALB |
| 3.0 i V6 24V | 8BXFZP ; 8EXFZP | E | 2946 | ES9J4 | A | + | | 04/99 ▸ 12/99 | 133027 | **731586** | 398 640 | CBS |
| 2.0 HDi | 8BR/HYE/HYF<br>8FRHYF ; 8ER/HYE/HYF | D | 1997 | DW10TD | M | + | | 04/99 ▸ 04/04 | 1331FT | **732598** | 379 562,5 | ALB |

# PEUGEOT (.../...)

## 406 (99>2004) (.../...)

| Type Ctr. | | CC | | AC | | 2+3 | OE | Valeo | DIM. | TECH |
|---|---|---|---|---|---|---|---|---|---|---|
| 2.0 HDi 8BR/HSF/HZE/HZF 8ER/HSF/HZE/HZF ; 8FR/HSF/HZF | D | 1997 | DW10ATED | M | + | | 04/99 ▸ 04/04 | 133068 | 734278 | 380 550 | ALB |
| 2.0 HDi 8BR/HYE/HYF/HZE/HZF 8ER/HYE/HYF/HZE/HZF ; 8FR/HYF/HZF | D | 1997 | DW10ATED,DW10TD | M | + | | 04/99 ▸ 04/04 | 133063 | 732598 | 379 562,5 | ALB |
| 2.0 HDi 8BR/HYE/HYF 8FRHYF ; 8ER/HYE/HYF | D | 1997 | DW10TD | M | - | | 04/99 ▸ 04/04 | 133068 | 734278 | 380 550 | ALB |
| 2.0 HDi 8BRHZR ; 8ERHZR | D | 1997 | DW10ATED | A | + | | 01/01 ▸ | 133064 | 734279 | 542 580 | ALB |
| 2.0 HDi 8BRHZR ; 8ERHZR | D | 1997 | DW10ATED | A | + | | 01/01 ▸ 04/04 | 1330R2 | 734279 | 542 580 | ALB |
| 2.2 HDI 16V 8C4HXF | D | 2179 | DW12TED4 | M | +/- | | 05/03 ▸ 10/04 | 133044 | 732567 | 633 413,7 | ALB |
| 2.2 HDi 16V 8B4HXF ; 8E4HXF | D | 2179 | DW12TED4 | M | + | | 10/00 ▸ 04/04 | 133078 | 734280 | 380 558 | ALB |

## 407

| | | | | | | | | | | | |
|---|---|---|---|---|---|---|---|---|---|---|---|
| 1.8 i 16V 6D6FZB ; 6E6FZB | E | 1749 | EW7J4 | M | +/- | | 04/04 ▸ | 1330J7 | •735608 | 378 536 | ALB |
| 1.8 i 16V 6D6/FYC/FZB ; 6E6 FYC/FZB | E | 1749 | EW7A,EW7J4 | M | + | | 04/04 ▸ | 1330P9 | •735608 | 378 536 | ALB |
| 1.8 i 16V 6D6FYC ; 6E6FYC | E | 1749 | EW7A | M | + | | 01/06 ▸ 04/06 | 1330W2 | 734338 | 378,6 568,8 | ALB |
| 1.8 i 16V 6D6FZB ; 6E6FZB | E | 1749 | EW7J4 | M | | | 04/04 ▸ 10/05 | 1330W2 | 734338 | 378,6 568,8 | ALB |
| 2.0 i 16V 6DRFNB ; 6ERFNB | E | 1997 | EW10J4 | M | +/- | | 04/04 ▸ | 1330J7 | •735608 | 378 536 | ALB |
| 2.0 i 16V 6DRFNB ; 6ERFNB | E | 1997 | EW10J4 | M | + | | 04/04 ▸ 10/05 | 1330W2 | 734338 | 378,6 568,8 | ALB |
| 2.0 i 16V 6DRFJC ; 6ERFJC | E | 1997 | EW10A | M | + | | 05/06 ▸ | 1330P9 | •735608 | 378 536 | ALB |
| 2.0 i 16V 6DRFJC ; 6ERFJC | E | 1997 | EW10A | M | | | 01/06 ▸ 04/06 | 1330W2 | 734338 | 378,6 568,8 | ALB |
| 2.0 i 16V 6DR/FJF/FNE ; 6ER FJF/FNE | E | 1997 | EW10A,EW10J4 | A | + | | 04/04 ▸ | 1330J8 | 734463 | 378,6 558,2 | ALB |
| 2.0 i 16V 6DR/FJF/FNE ; 6ER FJF/FNE | E | 1997 | EW10A,EW10J4 | A | | | 04/04 ▸ | 1330T1 | 734463 | 378,6 558,2 | ALB |
| 2.0 i 16V 6DRFJC ; 6ERFJC ▸ 10765 | E | 1997 | EW10A | M | + | | 01/06 ▸ 04/06 | 1330F5 | •735608 | 378 536 | ALB |
| 2.2 i 16V 6D3/FYH/FZH 6J3FYH ; 6E3/FYH/FZH | E | 2230 | EW12J4 | M | + | | 04/04 ▸ | 1330J9 | 734366 | 378 558 | ALB |
| 2.2 i 16V 6D3/FYF/FZF ; 6E3 FYF/FZF | E | 2230 | EW12J4 | A | + | | 04/04 ▸ | 1330K2 | 734423 | 378 558,5 | ALB |
| 3.0 i V6 24V 6JXFVH | E | 2946 | ES9A | M | + | | 10/05 ▸ | 1330P6 | | 707 380 | ALB |
| 3.0 i V6 24V 6EXFVJ ; 6JXFVJ 6DX/FVJ | E | 2946 | ES9A | A | + | | 04/04 ▸ | 1330K8 | 734452 | 380 704 | ALB |
| 1.6 HDi 16V 6D9HZC ; 6E9HZC | D | 1560 | DV6TED4 | M | +/- | | 04/04 ▸ | 1330J9 | 734366 | 378 558 | ALB |
| 1.6 HDi 16V 6D9HYC ; 6E9HYC | D | 1560 | DV6TED4 | M | + | | 04/04 ▸ | 1330J9 | 734366 | 378 558 | ALB |
| 2.0 HDi 16V 6DRHRH ; 6ERHRH | D | 1997 | DW10BTED4 | M | +/- | | 04/04 ▸ | 1330J7 | •735608 | 378 536 | ALB |
| 2.0 HDi 16V 6ERHRH ; 6JRHRH 6DR/HRG/HRH | D | 1997 | DW10BTED4 | M | + | | 04/04 ▸ | 1330W2 | 734338 | 378,6 568,8 | ALB |
| 2.0 HDi 16V 6DR/HF8 ; 6ER/HF8 HLH/HRG | D | 1997 | DW10BTED4 | M | | | 04/04 ▸ | 1330W2 | 734338 | 378,6 568,8 | ALB |
| 2.0 HDi 16V 6DR/HRE/HRJ ; 6ER HRE/HRJ | D | 1997 | DW10BTED4 | A | + | | 04/04 ▸ | 1330T1 | 734463 | 378,6 558,2 | ALB |
| 2.0 HDi 16V 6DR/HRE/HRJ ; 6ER HRE/HRJ ▸ 11238 | D | 1997 | DW10BTED4 | A | + | | 04/04 ▸ 08/07 | 1330J8 | 734463 | 378,6 558,2 | ALB |
| 2.7 HDi V6 24V 6EUHZJ ; 6JUHZJ 6DU/HZJ | D | 2720 | DT17BTED4 | A | + | | 10/05 ▸ | 1330P7 | | 375 478 | CBS |

## 504

| | | | | | | | | | | | |
|---|---|---|---|---|---|---|---|---|---|---|---|
| 1.6 504/M71/U01/V01 | E | 1618 | XC7 | M | +/- | TSW | 08/79 ▸ 07/85 | 1300B0 | 810881 | 290 463 | CBS |
| 1.8,1.8 i 504/A01/A02/B02/C02 E01/EA1/F01/F81/M01/M51/V51/V57 | E | 1796 | KF5,XM,XM7 | M | +/- | TSW | 06/68 ▸ 09/93 | 1300B0 | 810881 | 290 463 | CBS |
| 1.8 504/A03/E03/M03/M53 | E | 1796 | XM,XM7 | A | +/- | | 12/68 ▸ 07/85 | 1300B2 | | 300 470 | CBS |
| 2.0,2.0 i 504/A11/A12/B12/C12 D11/F11/H11/MA1/MY1/V11 | E | 1971 | XN1,XN2,XNA | M | +/- | TSW | 09/69 ▸ 07/85 | 1300B0 | 810881 | 290 463 | CBS |
| 2.0,2.0 i 504/A13/A14/B14/C14 D13/F13/H13/MA3/MY3 | E | 1971 | XN1,XN2,XNA | A | +/- | | 09/69 ▸ 07/85 | 1300B2 | | 300 470 | CBS |
| 2.0 504MY3 | E | 1971 | XN1 | A | | | 08/79 ▸ 07/84 | 1300B2 | | 300 470 | CBS |
| 2.7 V6,2.7 i V6 Injection 504/B31/C31/C32 | E | 2664 | ZM112,ZMJ | M | +/- | | 09/74 ▸ 07/84 | 130077 | | 494 400 | CBS |
| 2.7 V6 504C33 | E | 2664 | ZM112 | A | +/- | | 09/74 ▸ 07/77 | 1300C9 | | 495 400 | CBS |
| 1.9 D 504/E20/K40/U20/V20 | D | 1948 | XD88 | M | + | | 08/74 ▸ 07/85 | 130562 | | 605 406 | CBS |
| 1.9 D 504/E20/F80/K40/M20 | D | 1948 | XD88 | M | - | | 08/70 ▸ | 130019 | | 375 530 | CBS |
| 1.9 D 504/E20/K40/U20/V20 | D | 1948 | XD88 | M | - | | 08/79 ▸ 07/85 | 130927 | | 610 390 | CBS |
| 1.9 D 504/E20/F80 | D | 1948 | XD88 | M | | | 08/70 ▸ 07/76 | 130562 | | 605 406 | CBS |
| 2.1 D 504/A20/D20/D80/E20/F20/F80/H20/M20/V60/VZ0 | D | 2112 | XD4,XD90 | M | + | | > ▸ 07/85 | 130562 | | 605 406 | CBS |
| 2.1 D 504/D20/E20/F80/M20/V60/VZ0 | D | 2112 | XD4,XD90 | M | - | | > ▸ 07/85 | 130927 | | 610 390 | CBS |
| 2.1 D 504H20 | D | 2112 | XD4 | M | | | 02/73 ▸ 07/76 | 130927 | | 610 390 | CBS |

Radiator Radiateur Motorkühler Radiatore di raffreddamento Radiator Radyatör Radiator Радиатор vízhűtő Vodní chladič Radiator Ψυγείο



• **New** Nouveau **Nuevo** Novo **Nuovo** Nieuw **Neu** Nowość **Yeni** Новый Νέο **Nový**

# PEUGEOT (.../...)

## 504 (.../...)

| | | | | | | | | | | | | |
|---|---|---|---|---|---|---|---|---|---|---|---|---|
| 2.1 D | 504/A20/D20/D80/E20/F20/F80/H20/M20 ▸ 3821879 | D | 2112 | XD4,XD90 | M | - | | 09/69 ▸ | 130019 | | 375 530 | CBS |
| 2.3 D | 504/A40/D40/F20/F40/H40/M40/V40/V48 | D | 2304 | XD2,XD2P | M | + | | 08/71 ▸ 09/93 | 130562 | | 605 406 | CBS |
| 2.3 D | 504/A40/D40/F20/F40/H40/M40/V40/V48 | D | 2304 | XD2,XD2P | M | - | | 08/71 ▸ 09/93 | 130927 | | 610 390 | CBS |
| 2.3 D | 504/A45/M45 | D | 2304 | XD2 | A | + | | 06/76 ▸ 07/83 | 130562 | | 605 406 | CBS |
| 2.3 D | 504F45 | D | 2304 | XD2P | A | - | | 08/76 ▸ 07/80 | 130019 | | 375 530 | CBS |
| 2.3 D | 504F45 | D | 2304 | XD2P | A | | | 08/76 ▸ 07/80 | 130562 | | 605 406 | CBS |
| 2.3 D | 504/D40/F20/F40/H40/V40 ▸ 3821879 | D | 2304 | XD2P | M | - | | 08/76 ▸ 1983 | 130019 | | 375 530 | CBS |
| 2.5 D | 504V58 | D | 2498 | XD3 | M | + | | 08/85 ▸ 09/93 | 130562 | | 605 406 | CBS |
| 2.5 D | 504V58 | D | 2498 | XD3 | M | - | | 08/85 ▸ 09/93 | 130927 | | 610 390 | CBS |

## 505

| | | | | | | | | | | | | |
|---|---|---|---|---|---|---|---|---|---|---|---|---|
| 1.8 | 551/A01/A71/D01/F01 | E | 1796 | XM7 | M | + | | 08/80 ▸ 05/84 | 130944 | | 500 358 | CBS |
| 1.8 | 551/A01/A71/A77/D01/D71/D77/F01/F71/F77/FC2 | E | 1796 | XM7,XM7A | M | + | FL+, TSW | 08/80 ▸ 1990 | 1300E1 | **730071** | 492 358 | CBS |
| 1.8 | 551/A01/A71/D01/D71/D77/F01/F71/F77/FC2 | E | 1796 | XM7,XM7A | M | + | TSW | 05/84 ▸ 1990 | 1300R4 | **810882** | 390 364 | ALB |
| 1.8 | 551/A01/A71/A77/D01/D71/D77/F01/F71/F77/FC2 | E | 1796 | XM7,XM7A | M | + | TSW | 05/84 ▸ | 1331E0 | **810882** | 390 364 | ALB |
| 1.8 | 551/A01/A71/A77/D01/D71/D77/F01/F71/F77/FC2 | E | 1796 | XM7,XM7A | M | - | TSW | 08/80 ▸ 1990 | 1300G5 | **810882** | 390 364 | ALB |
| 1.8 | 551/A01/A71/D01/F01 | E | 1796 | XM7 | M | - | | 08/80 ▸ 07/85 | 130599 | | 392 358 | CBS |
| 1.8 | 551A77 | E | 1796 | XM7A | M | - | TSW | 08/86 ▸ 1990 | 1300R4 | **810882** | 390 364 | ALB |
| 1.8 | 551/A03/A73 | E | 1796 | XM7,XM7A | A | + | | 05/79 ▸ 05/84 | 130944 | | 500 358 | CBS |
| 1.8 | 551/A03/A73/F73 | E | 1796 | XM7,XM7A | A | + | TSW | 05/84 ▸ 1990 | 1300R4 | **810882** | 390 364 | ALB |
| 1.8 | 551/A03/A73/F73 | E | 1796 | XM7,XM7A | A | + | TSW | 05/84 ▸ | 1331E0 | **810882** | 390 364 | ALB |
| 1.8 | 551F73 | E | 1796 | XM7A | A | + | FL+, TSW | 07/88 ▸ 1990 | 1300E1 | **730071** | 492 358 | CBS |
| 1.8 | 551/A03/A73 | E | 1796 | XM7,XM7A | A | - | | 05/79 ▸ 05/84 | 130599 | | 392 358 | CBS |
| 1.8 | 551/A03/A73/F73 | E | 1796 | XM7,XM7A | A | - | TSW | 05/84 ▸ 1990 | 1300G5 | **810882** | 390 364 | ALB |
| 1.8 | 551/A03/A73 | E | 1796 | XM7,XM7A | A | | FL+, TSW | 05/84 ▸ 1990 | 1300E1 | **730071** | 492 358 | CBS |
| 2.0,2.0 i | 551/A11/A17/AF6/D11 D17/DG1/F11/F17/FB1/G11/G17/H11/H17/S11/S17 | E | 1971 | XN1,XN1A,XN6 | M | + | | 05/79 ▸ 1990 | 130944 | | 500 358 | CBS |
| 2.0,2.0 i | 551/A17/AF6/D11/D17 DG1/F11/F17/FB1/G11/G17/H11/H17/S11/S17 | E | 1971 | XN1,XN1A,XN6 | M | + | FL+, TSW | 08/83 ▸ 1990 | 1300E1 | **730071** | 492 358 | CBS |
| 2.0 | 551/A17/D11/D17/DG1/F11/F17/FB1/G11/G17/H11 H17/S11/S17 | E | 1971 | XN1,XN1A | M | + | TSW | 05/84 ▸ 1990 | 1300R4 | **810882** | 390 364 | ALB |
| 2.0 | 551/A17/D11/D17/DG1/F11/F17/FB1/G11/G17/H11 H17/S11/S17 | E | 1971 | XN1,XN1A | M | + | TSW | 05/84 ▸ | 1331E0 | **810882** | 390 364 | ALB |
| 2.0,2.0 i | 551/A11/A17/AF6/D11 D17/DG1/F11/F17/FB1/G11/G17/H11/H17/S11/S17 | E | 1971 | XN1,XN1A,XN6 | M | - | | 05/79 ▸ 1990 | 130599 | | 392 358 | CBS |
| 2.0 i | 551AF6 | E | 1971 | XN6 | M | - | TSW | 08/83 ▸ 07/85 | 1300R4 | **810882** | 390 364 | ALB |
| 2.0,2.0 i | 551/A17/AF6/D11/D17 DG1/F11/F17/FB1/G11/G17/H11/H17/S11/S17 | E | 1971 | XN1,XN1A,XN6 | M | - | TSW | 08/83 ▸ 1990 | 1300G5 | **810882** | 390 364 | ALB |
| 2.0,2.0 i | 551/A13/AF4/D13/F13 FF4 | E | 1971 | XN1,XN6 | A | + | | 05/79 ▸ 07/88 | 130944 | | 500 358 | CBS |
| 2.0,2.0 i | 551/A18/AF4/D13/D18 F13/F18/FF4 | E | 1971 | XN1,XN1A,XN6 | A | + | FL+, TSW | 08/82 ▸ 1990 | 1300E1 | **730071** | 492 358 | CBS |
| 2.0 | 551/A13/A18/D13/D18/F13/F18 | E | 1971 | XN1,XN1A | A | + | TSW | 05/84 ▸ 1990 | 1300R4 | **810882** | 390 364 | ALB |
| 2.0 | 551/A13/A18/D13/D18/F13/F18 | E | 1971 | XN1,XN1A | A | + | TSW | 05/84 ▸ | 1331E0 | **810882** | 390 364 | ALB |
| 2.0,2.0 i | 551/A13/AF4/D13/F13 FF4 | E | 1971 | XN1,XN6 | A | - | | 05/79 ▸ 02/86 | 130599 | | 392 358 | CBS |
| 2.0 i | 551/AF4/FF4 | E | 1971 | XN6 | A | - | TSW | 08/82 ▸ 07/88 | 1300R4 | **810882** | 390 364 | ALB |
| 2.0,2.0 i | 551/A13/A18/AF4/D13 D18/F13/F18/FF4 | E | 1971 | XN1,XN1A,XN6 | A | - | TSW | 08/82 ▸ 1990 | 1300G5 | **810882** | 390 364 | ALB |
| 2.0 | 551A13 | E | 1971 | XN1 | A | | FL+, TSW | 05/84 ▸ 07/88 | 1300E1 | **730071** | 492 358 | CBS |
| 2.0 i | 551A16 | E | 1995 | ZEJ | M | +/- | | 05/79 ▸ 05/84 | 130531 | | 432 358 | CBS |
| 2.0 i | 551/A12/A16 | E | 1995 | ZEJ | M | +/- | | 05/79 ▸ 07/83 | 130532 | | 432 358 | CBS |
| 2.0 i | 551/A16/D16/F16/FD1 | E | 1995 | ZEJ | M | +/- | | 07/83 ▸ 02/86 | 1300E8 | | 440 358 | CBS |
| 2.0 i | 551/A16/AF6 | E | 1995 | ZEJ,ZEJK | M | +/- | | 02/86 ▸ | 1300G7 | | 440 364 | ALB |
| 2.0 i | 551AF6 | E | 1995 | ZEJK | M | +/- | | 08/88 ▸ | 1300E4 | | 500 358 | CBS |
| 2.0 i | 551/D16/F16/FD1 | E | 1995 | ZEJ,ZEJK | M | + | | 08/85 ▸ | 1300E4 | | 500 358 | CBS |
| 2.0 i | 551/D16/F16/FD1 | E | 1995 | ZEJ,ZEJK | M | + | | 02/86 ▸ | 1300G7 | | 440 364 | ALB |
| 2.0 i | 551/AF6/F16 | E | 1995 | ZEJK | M | | | 07/88 ▸ 1990 | 1300G7 | | 440 364 | ALB |
| 2.0 i | 551/AF6/F16 | E | 1995 | ZEJK | M | | | 07/88 ▸ 1990 | 1300E4 | | 500 358 | CBS |
| 2.0 i | 551A14 | E | 1995 | ZEJ | A | +/- | | 05/79 ▸ 07/83 | 130531 | | 432 358 | CBS |
| 2.0 i | 551A14 | E | 1995 | ZEJ | A | +/- | | 05/79 ▸ 07/83 | 130532 | | 432 358 | CBS |
| 2.0 i | 551A14 | E | 1995 | ZEJ | A | +/- | | 07/83 ▸ 02/86 | 1300E8 | | 440 358 | CBS |
| 2.0 i | 551/A14/A19 | E | 1995 | ZEJ,ZEJK | A | +/- | | 06/84 ▸ 1989 | 1300E4 | | 500 358 | CBS |
| 2.0 i | 551/A14/A19 | E | 1995 | ZEJ,ZEJK | A | +/- | | 08/84 ▸ 1989 | 1300G7 | | 440 364 | ALB |
| 2.2 T,2.2 Turbo 2.2 Turbo injection | BA716 ; 551/A66/A96 | E | 2155 | N9T,N9TE | M | + | | 08/82 ▸ | 130924 | | 610 390 | CBS |
| 2.2 Turbo 2.2 Turbo injection | 551A96 ; BA716 | E | 2155 | N9TE | M | | | 07/88 ▸ | 1300E3 | | 610 390 | CBS |

# PEUGEOT (.../...)

## 505 (.../...)

| | | CC | | AC | | | OE | Valeo | DIM. | TECH |
|---|---|---|---|---|---|---|---|---|---|---|
| 2.2 Turbo<br>2.2 Turbo injection | BA71F ; BD71G<br>BF71G ; C225<br>CE328 ; 551/A99 | E | 2155 | N9TE | A | + | | 07/88 ▸ 1990 | 1300E3 | | 610 390 | CBS |
| 2.2 i | 551/A36/A86 | E | 2165 | ZDJK,ZDJL | M | +/- | | 08/81 ▸ 05/84 | 130531 | | 432 358 | CBS |
| 2.2 i | 551A36 | E | 2165 | ZDJK | M | +/- | | 08/81 ▸ 07/83 | 130532 | | 432 358 | CBS |
| 2.2 i | 551/A36/A86/D86/F86 | E | 2165 | ZDJK,ZDJL | M | +/- | | 08/83 ▸ 02/86 | 1300E8 | | 440 358 | CBS |
| 2.2 i | 551A36 | E | 2165 | ZDJK | M | +/- | | 05/84 ▸ 07/85 | 1300E4 | | 500 358 | CBS |
| 2.2 i | 551A86 | E | 2165 | ZDJL | M | +/- | | 02/86 ▸ 1990 | 1300G7 | | 440 364 | ALB |
| 2.2 i | 551/D86/F86 ; BD815 ; BF327 ; BF816 ; BA8/15<br>16 | E | 2165 | ZDJL | M | + | | 02/86 ▸ | 1300G7 | | 440 364 | ALB |
| 2.2 i | BF327 ; BF816 ; BA8/15/16 | E | 2165 | ZDJL | M | + | | 07/88 ▸ | 1300E4 | | 500 358 | CBS |
| 2.2 i | 551A86 | E | 2165 | ZDJL | M | | | 08/83 ▸ 02/86 | 1300E8 | | 440 358 | CBS |
| 2.2 i | BF327 ; 551/D86/F86 | E | 2165 | ZDJL | M | | | 02/86 ▸ 1990 | 1300G7 | | 440 364 | ALB |
| 2.2 i | BF327 | E | 2165 | ZDJL | M | | | 07/89 ▸ 1990 | 1300E4 | | 500 358 | CBS |
| 2.2 i | 551A34 | E | 2165 | ZDJK | A | +/- | | 08/81 ▸ 07/83 | 130531 | | 432 358 | CBS |
| 2.2 i | 551A34 | E | 2165 | ZDJK | A | +/- | | 08/81 ▸ 07/83 | 130532 | | 432 358 | CBS |
| 2.2 i | 551/A34/A84/A89 | E | 2165 | ZDJK,ZDJL | A | +/- | | 07/83 ▸ 02/86 | 1300E8 | | 440 358 | CBS |
| 2.2 i | 551/A34/A84/A89 | E | 2165 | ZDJK,ZDJL | A | +/- | | 05/84 ▸ 07/88 | 1300E4 | | 500 358 | CBS |
| 2.2 i | 551/A84/A89 | E | 2165 | ZDJL | A | +/- | | 02/86 ▸ 1990 | 1300G7 | | 440 364 | ALB |
| 2.2 i | 551/D89/F89 ; BD81E ; BF81F ; CF221 ; CF327<br>BA8/1E/2F/2R | E | 2165 | ZDJL | A | + | | 08/86 ▸ | 1300E4 | | 500 358 | CBS |
| 2.2 i | 551/D89/F89 ; BD81E ; BF81F ; CF221 ; BA8/1E<br>2F/2R | E | 2165 | ZDJL | A | + | | 08/86 ▸ | 1300G7 | | 440 364 | ALB |
| 2.2 i | 551A84 | E | 2165 | ZDJL | A | | | 08/83 ▸ 02/86 | 1300E8 | | 440 358 | CBS |
| 2.2 i | CF221 ; CF327 ; 551/F89 | E | 2165 | ZDJL | A | | | 08/86 ▸ 1990 | 1300E4 | | 500 358 | CBS |
| 2.2 i | 551F89 ; CF221 | E | 2165 | ZDJL | A | | | 08/86 ▸ 1990 | 1300G7 | | 440 364 | ALB |
| 2.8 V6 | 551/A76 ; BA9/16/17<br>19 | E | 2849 | ZNJK-146,ZNJK-170 | M | + | | 08/85 ▸ 1990 | 1300G9 | | 492 390 | CBS |
| 2.8 V6 | 551/A79 ; BA9/1F/1J<br>1R | E | 2849 | ZNJK-146,ZNJK-170 | A | + | | 08/86 ▸ 1990 | 1300R6 | | 492 390 | CBS |
| 2.3 TD<br>1633872 ▸ | 551A46 | D | 2304 | XD2S | M | +/- | | > ▸ 07/85 | 130945 | | 636 390 | CBS |
| 2.3 D<br>1612649 ▸ | 551A48 | D | 2304 | XD2 | M | +/- | | > ▸ 07/84 | 130947 | | 636 390 | CBS |
| 2.3 D | 551/A48/F40 | D | 2304 | XD2 | M | +/- | | 08/80 ▸ 07/81 | 130171 | | 605 406 | CBS |
| 2.3 D | 551/A48/D40/D48/F40/S40/S48 | D | 2304 | XD2 | M | +/- | | 08/81 ▸ | 130559 | | 636 390 | CBS |
| 2.3 D | 551/A40/A48 | D | 2304 | XD2 | M | - | | 08/79 ▸ 07/81 | 130163 | | 605 406 | CBS |
| 2.3 D | 551/A40/A48/D40/D48/S40/S48 | D | 2304 | XD2 | M | - | | 08/81 ▸ 07/85 | 130945 | | 636 390 | CBS |
| 2.3 D,2.3 TD | 551/A44/A45 | D | 2304 | XD2,XD2S | A | +/- | | > ▸ 07/85 | 130948 | | 636 390 | CBS |
| 2.3 D | 551A45 | D | 2304 | XD2 | A | +/- | | 08/79 ▸ 07/81 | 130171 | | 605 406 | CBS |
| 2.3 TD<br>▸ 1306463 | 551A44 | D | 2304 | XD2S | A | +/- | | 08/80 ▸ | 130546 | | 632 390 | CBS |
| 2.3 D<br>▸ 1612648 | 551A45 | D | 2304 | XD2 | A | +/- | | 08/81 ▸ | 130559 | | 636 390 | CBS |
| 2.3 TD<br>▸ 1633871 | 551A46 | D | 2304 | XD2S | M | +/- | | 08/80 ▸ | 130931 | | 640 390 | CBS |
| 2.3 TD<br>1306464 ▸ 1662004 | 551A44 | D | 2304 | XD2S | A | +/- | | > ▸ | 130933 | | 632 390 | CBS |
| 2.5 D<br>1612649 ▸ | 551/D57/DH8/G58/S50/S58 | D | 2498 | XD3 | M | +/- | | > ▸ 1990 | 130947 | | 636 390 | CBS |
| 2.5 D,2.5 TD | 551/A50/A53/A56/A58 | D | 2498 | XD3,XD3T,XD3TE | M | +/- | | 07/81 ▸ | 130945 | | 636 390 | CBS |
| 2.5 D,2.5 TD | 551/A50/A53/A56/A58<br>D50/D57/D58/F50/F58/G58/H58/S50/S58 | D | 2498 | XD3,XD3T,XD3TE | M | +/- | | 07/85 ▸ | 1300F5 | | 639 388 | ALB |
| 2.5 D | 551/A50/A58/D50/D57/F50/F58/G58/S50/S58 | D | 2498 | XD3 | M | +/- | | 07/85 ▸ | 1300R0 | | 639 388 | ALB |
| 2.5 TD | 551A56 | D | 2498 | XD3T,XD3TE | M | +/- | | 07/86 ▸ 1990 | 1300H1 | | 639 388 | ALB |
| 2.5 D | 551A50 | D | 2498 | XD3 | M | - | | 08/79 ▸ 07/81 | 130163 | | 605 406 | CBS |
| 2.5 D | 551/D50/D57/D58/DH8/F50/F58/G58/H58/S50/S58 | D | 2498 | XD3 | M | - | | 07/81 ▸ | 130945 | | 636 390 | CBS |
| 2.5 D,2.5 TD | 551/A53/A58/D58/F50<br>F56/F58/H58 | D | 2498 | XD3,XD3TE | M | | | 07/85 ▸ 1990 | 1300F5 | | 639 388 | ALB |
| 2.5 D | 551/A58/F50/F58 | D | 2498 | XD3 | M | | | 07/85 ▸ 1990 | 1300R0 | | 639 388 | ALB |
| 2.5 TD | 551F56 | D | 2498 | XD3TE | M | | | 08/88 ▸ 1990 | 1300H1 | | 639 388 | ALB |
| 2.5 D,2.5 TD | 551/A54/A55/A57/A59<br>D53/D55/D59/F55/F57/F59 | D | 2498 | XD3,XD3T,XD3TE | A | +/- | | 08/85 ▸ 1990 | 130948 | | 636 390 | CBS |
| 2.5 D,2.5 TD | 551/A55/A57/A59/D53<br>D55/D59/F55/F57/F59 | D | 2498 | XD3,XD3T,XD3TE | A | +/- | | 07/85 ▸ 1990 | 1300F6 | | 639 388 | ALB |
| 2.5 D,2.5 TD | 551/A55/A57/D53/D59<br>F57/F59 | D | 2498 | XD3,XD3T | A | +/- | | 07/85 ▸ | 1300R1 | | 639 388 | ALB |
| 2.5 TD | 551/D59/F59 | D | 2498 | XD3T | A | | | 08/85 ▸ 1990 | 1300R1 | | 639 388 | ALB |

Radiator Radiateur Motorkühler Radiatore di raffreddamento Radiator Radyatör Radiator Радиатор Radiador Vodní chladič vízhűtő Ψυγείο



• **New** Nouveau **Nuevo** Novo **Nuovo** Nieuw **Neu** Nowość **Yeni** Новый Νέο **Nový**

| | Type Ctr. | | CC | | | AC | | | OE | Valeo | DIM. | TECH |
|---|---|---|---|---|---|---|---|---|---|---|---|---|
| **505 (.../...)** | | | | | | | | | | | | |
| 2.5 D | 551/DH8/G58/S50/S58 | D | 2498 | XD3 | M | +/- | | 03/82 ▸ | 130559 | | 636 390 | CBS |
| ▸ 1612648 | | | | | | | | | | | | |
| 2.5 D | 551/A55/D55/F55 | D | 2498 | XD3 | A | +/- | | 08/81 ▸ | 130559 | | 636 390 | CBS |
| **508** | | | | | | | | | | | | |
| 1.6 THP 156 16V | 8D5/FS8/FV8 ; 8E5 | E | 1598 | EP6C,EP6CDT | M | +/- | | 01/11 ▸ | 1330X2 | •735371 | 569 440 | ALB |
| 1.6 VTi 120 16V | FS8/FV8 | | | | | | | | | | | |
| 1.6 THP 156 16V | 8D5FVA ; 8E5FVA | E | 1598 | EP6CDT | A | +/- | | 03/11 ▸ | 1330X2 | •735371 | 569 440 | ALB |
| 1.6 HDi 112,1.6 e-HDi 112 | 8D9/HL0/HR8 ; 8E9 | D | 1560 | DV6C | M | +/- | | 01/11 ▸ | 1330X2 | •735371 | 569 440 | ALB |
| | HL0/HR8 | | | | | | | | | | | |
| **604** | | | | | | | | | | | | |
| 2.0 i | 604A18 | E | 1971 | XN6 | M | +/- | TSW | 07/82 ▸ 1984 | 1300B0 | 810881 | 290 463 | CBS |
| 2.7 i V6 | 604A32 | E | 2664 | ZMJ | M | + | | 07/80 ▸ 1985 | 1300H1 | | 639 388 | ALB |
| 2.7 V6,2.7 i V6 | 604/A31/A32/A37 | E | 2664 | ZM,ZMJ | M | - | | 10/77 ▸ 1985 | 130077 | | 494 400 | CBS |
| 2.7 V6,2.7 i V6 | 604/A31/A32/A37 | E | 2664 | ZM,ZMJ | M | - | | 07/84 ▸ 1985 | 1300C9 | | 495 400 | CBS |
| 2.7 V6 | 604/A31/A37 | E | 2664 | ZM | M | | | 07/84 ▸ 1985 | 1300C9 | | 495 400 | CBS |
| 2.7 i V6 | 604A34 | E | 2664 | ZMJ | A | + | | 07/80 ▸ 1985 | 1300H1 | | 639 388 | ALB |
| 2.7 V6,2.7 i V6 | 604/A33/A34 | E | 2664 | ZM,ZMJ | A | - | | 03/76 ▸ 1985 | 1300C9 | | 495 400 | CBS |
| 2.8 i V6 | 604A66 | E | 2849 | ZNJ | M | + | | 09/83 ▸ 12/86 | 1300H1 | | 639 388 | ALB |
| 2.8 i V6 | 604A66 | E | 2849 | ZNJ | M | - | | 09/83 ▸ 06/84 | 130077 | | 494 400 | CBS |
| 2.8 i V6 | 604A66 | E | 2849 | ZNJ | M | - | | 07/84 ▸ 12/86 | 1300C9 | | 495 400 | CBS |
| 2.8 i V6 | 604A64 | E | 2849 | ZNJ | A | + | | 07/84 ▸ 1985 | 1300H1 | | 639 388 | ALB |
| 2.8 i V6 | 604A64 | E | 2849 | ZNJ | A | - | | 07/84 ▸ 1985 | 1300C9 | | 495 400 | CBS |
| 2.3 TD | 604/A40/A46 | D | 2304 | XD2S | M | +/- | | 02/79 ▸ 06/81 | 130548 | | 635 390 | CBS |
| 2.3 TD | 604/A40/A46 | D | 2304 | XD2S | M | +/- | | 07/81 ▸ 06/82 | 130550 | | 632 390 | CBS |
| 2.3 TD | 604/A40/A46 | D | 2304 | XD2S | M | +/- | | 07/82 ▸ 1985 | 130931 | | 640 390 | CBS |
| 2.3 TD | 604A45 | D | 2304 | XD2S | A | +/- | | 03/82 ▸ 1985 | 130933 | | 632 390 | CBS |
| ▸ 6647016 | | | | | | | | | | | | |
| 2.3 TD | 604A45 | D | 2304 | XD2S,XD2SC | A | +/- | | 02/79 ▸ 06/81 | 130548 | | 635 390 | CBS |
| ▸ 6643509 | | | | | | | | | | | | |
| 2.5 TD | 604A56 | D | 2498 | XD3T | M | +/- | | 09/83 ▸ 12/86 | 130945 | | 636 390 | CBS |
| 2.5 TD | 604A55 | D | 2498 | XD3T | A | +/- | | 09/83 ▸ 12/86 | 130948 | | 636 390 | CBS |
| **605 (89>94)** | | | | | | | | | | | | |
| 2.0 i Turbo | 6BRGY2 | E | 1998 | XU10J2TE | M | +/- | TSW | 09/92 ▸ 06/94 | 133002 | 730934 | 632 414,5 | ALM |
| 2.0,2.0 i | 6BR/2A2/2A8/5A2/6A2 | E | 1998 | XU102C,XU102C TR,XU10J2,XU10M | M | + | TSW | 10/89 ▸ 06/94 | 1300N0 | 810836 | 640 386 | ALB |
| | 6A8/DZ2/FZ2/FZ8/FZ9 | | | | | | | | | | | |
| 2.0 i Turbo | 6BRGX2 ;6BRGY2 | E | 1998 | XU10J2TE | M | + | TSW | 09/92 ▸ 06/94 | 1301C4 | 819428 | 640 414,5 | ALM |
| 2.0,2.0 i | 6BR/2A2/2A8/5A2/6A2 | E | 1998 | XU102C,XU102C TR,XU10J2,XU10M | M | - | TSW | 10/89 ▸ 06/94 | 1300L9 | 816554 | 530 378 | ALM |
| | DZ2/FZ2/FZ8/FZ9 | | | | | | | | | | | |
| 2.0,2.0 i | 6BR/2A2/2A8/5A2/6A2 | E | 1998 | XU102C,XU102C TR,XU10J2,XU10M | M | - | TSW | 10/89 ▸ 06/94 | 1301A1 | 810836 | 640 386 | ALB |
| | DZ2/FZ2/FZ9 | | | | | | | | | | | |
| 2.0 i | 6BR/6A4/FZ4 | E | 1998 | XU10J2 | A | + | TSW | 04/90 ▸ 06/94 | 1300N0 | 810836 | 640 386 | ALB |
| 3.0 i V6,3.0 i V6 24V | 6BU/FZ2/KZ2 | E | 2963 | ZPJ,ZPJ4 | M | +/- | TSW | 09/93 ▸ 06/94 | 1301E5 | 810836 | 640 386 | ALB |
| 3.0 i V6 | 6BUFZ4 | E | 2963 | ZPJ | A | +/- | TSW | 09/93 ▸ 06/94 | 1301E5 | 810836 | 640 386 | ALB |
| 3.0 i V6 | 6BUFZ4 | E | 2963 | ZPJ | A | +/- | 2xPIP+ | 11/93 ▸ 06/94 | 1301R2 | | 640 386 | ALB |
| 3.0 i V6,3.0 i V6 24V | 6BS/6A2/FZ2/KZ2 | E | 2975 | ZPJ,ZPJ4 | M | +/- | TSW | 10/89 ▸ 06/94 | 1301E5 | 810836 | 640 386 | ALB |
| 3.0 i V6 | 6BS/6A4/FZ4 | E | 2975 | ZPJ | A | +/- | TSW | 04/90 ▸ 06/94 | 1301E5 | 810836 | 640 386 | ALB |
| 3.0 i V6 | 6BSFZ4 | E | 2975 | ZPJ | A | +/- | 2xPIP+ | 11/93 ▸ 06/94 | 1301R2 | | 640 386 | ALB |
| 2.1 TD Turbo | 6BP/8A2/8B2/8C2/HZ2 | D | 2088 | XUD11ATE,XUD11BTE | M | +/- | TSW | 04/90 ▸ 06/94 | 1301C4 | 819428 | 640 414,5 | ALM |
| 2.1 TD Turbo | 6BP/8A4/8C4/HZ4 | D | 2088 | XUD11ATE,XUD11BTE | A | +/- | TSW | 04/90 ▸ 06/94 | 1301C4 | 819428 | 640 414,5 | ALM |
| 2.1 D | 6BP/9A2/JZ2 | D | 2138 | XUD11A | M | +/- | TSW | 09/90 ▸ 06/94 | 1301E5 | 810836 | 640 386 | ALB |
| **605 (94>99)** | | | | | | | | | | | | |
| 2.0 i Turbo | 6BR/GX2/GXE | E | 1998 | XU10J2TE | M | +/- | TSW | 07/94 ▸ 05/99 | 1301Z6 | 731289 | 640 414,5 | ALM |
| 2.0 i Turbo | 6BRGXE | E | 1998 | XU10J2TE | M | +/- | TSW | 07/95 ▸ 05/99 | 133002 | 730934 | 632 414,5 | ALM |
| 2.0,2.0 i,2.0 i 16V | 6BR/5A2/6A8/6E2/FV2 | E | 1998 | XU102C TR,XU10J2,XU10J4R | M | + | TSW | 07/94 ▸ 05/99 | 1300N0 | 810836 | 640 386 | ALB |
| | FV9/FVE | | | | | | | | | | | |
| 2.0 i 16V | 6BR/6E2/FV2/FV9/FVE | E | 1998 | XU10J4R | M | - | TSW | 07/94 ▸ 05/99 | 1301A1 | 810836 | 640 386 | ALB |
| 2.0,2.0 i,2.0 i 16V | 6BR/5A2/6A8/6E2/FV2 | E | 1998 | XU102C TR,XU10J2,XU10J4R | M | - | TSW | 07/94 ▸ 05/99 | 1300L9 | 816554 | 530 378 | ALM |
| | FV9/FVE | | | | | | | | | | | |
| 2.0 i 16V | 6BR/6E4/FV4/FVP | E | 1998 | XU10J4R | A | +/- | 2xPIP+ | 07/94 ▸ 05/99 | 1301X5 | | 640 386 | ALB |
| 2.0 i Turbo | 6BR/GX4/GXP | E | 1998 | XU10J2TE | A | +/- | TSW | 07/94 ▸ 05/99 | 1301Z8 | 731289 | 640 414,5 | ALM |
| 2.0 i Turbo | 6BRGX4 ;6BRGY4 | E | 1998 | XU10J2TE | A | +/- | TSW | 07/94 ▸ 06/95 | 1301C4 | 819428 | 640 414,5 | ALM |
| 2.0 i Turbo | 6BR/GX4/GXP | E | 1998 | XU10J2TE | A | +/- | TSW | 06/95 ▸ 05/99 | 1301Z6 | 731289 | 640 414,5 | ALM |
| 2.0 i | 6BR6A4 | E | 1998 | XU10J2 | A | + | TSW | 07/94 ▸ 05/99 | 1300N0 | 810836 | 640 386 | ALB |
| 2.0 i | 6BR6A4 | E | 1998 | XU10J2 | A | - | TSW | 06/95 ▸ 05/99 | 1300L9 | 816554 | 530 378 | ALM |
| 2.0 i Turbo | 6BRGX4 | E | 1998 | XU10J2TE | A | | TSW | 07/94 ▸ 05/99 | 1301Z8 | 731289 | 640 414,5 | ALM |
| 3.0 i V6,3.0 i V6 24V | 6BU/FZ2/KZ2 | E | 2963 | ZPJ,ZPJ4 | M | +/- | TSW | 07/94 ▸ 06/97 | 1301E5 | 810836 | 640 386 | ALB |

# PEUGEOT (.../...)

## 605 (94>99) (.../...)

| | | | CC | | | AC | | | OE | Valeo | DIM. | TECH |
|---|---|---|---|---|---|---|---|---|---|---|---|---|
| 3.0 i V6 | 6BUFZ2 | E | 2963 | ZPJ | M | | TSW | 07/97 ▸ 05/99 | 1301E5 | **810836** | 640 386 | ALB |
| 3.0 i V6 | 6BUFZ4 | E | 2963 | ZPJ | A | +/- | TSW | 07/94 ▸ 05/95 | 1301E5 | **810836** | 640 386 | ALB |
| 3.0 i V6 | 6BUFZ4 | E | 2963 | ZPJ | A | +/- | 2xPIP+ | 07/94 ▸ 06/97 | 1301R2 | | 640 386 | ALB |
| 3.0 i V6 | 6BUFZ4 | E | 2963 | ZPJ | A | | 2xPIP+ | 07/97 ▸ 05/99 | 1301R2 | | 640 386 | ALB |
| 2.1 TD Turbo | 6BP/8B2/8C2/8CE/HZ2 | D | 2088 | XUD11ATE,XUD11BTE | M | +/- | TSW | 07/94 ▸ 05/99 | 1301Z8 | **731289** | 640 414,5 | ALM |
| 2.1 TD Turbo | 6BP8B2 | D | 2088 | XUD11ATE | M | | TSW | 07/94 ▸ 05/99 | 1301Z8 | **731289** | 640 414,5 | ALM |
| 2.1 TD Turbo | 6BP/8B4/8CP/HZ4 | D | 2088 | XUD11ATE,XUD11BTE | A | +/- | TSW | 07/94 ▸ 05/99 | 1301Z8 | **731289** | 640 414,5 | ALM |
| 2.1 TD Turbo | 6BP/8B4/8CP/HZ4 | D | 2088 | XUD11ATE,XUD11BTE | A | +/- | TSW | 06/95 ▸ 05/99 | 1301Z6 | **731289** | 640 414,5 | ALM |
| 2.1 TD Turbo | 6BP8B4 | D | 2088 | XUD11ATE | A | | TSW | 07/94 ▸ 05/99 | 1301Z8 | **731289** | 640 414,5 | ALM |
| 2.5 TD | 6BT/HY2/HYE | D | 2446 | DK5ATE | M | +/- | | 07/94 ▸ 05/99 | 1301TF | **731185** | 640 406 | CBS |

## 607 (2000>2004)

| | | | | | | | | | | | | |
|---|---|---|---|---|---|---|---|---|---|---|---|---|
| 2.0 i 16V | 9DR/FN5/FNB | E | 1997 | EW10J4 | M | + | | 05/00 ▸ 09/04 | 1331FT | **732598** | 379 562,5 | ALB |
| 2.0 i 16V | 9DRFNC | E | 1997 | EW10J4 | M | | | 01/02 ▸ 09/04 | 1331FT | **732598** | 379 562,5 | ALB |
| 2.2 i 16V | 9D3/FZB/FZC | E | 2230 | EW12J4 | M | + | PIP+ | 05/00 ▸ 09/04 | 133054 | **732599** | 378,6 562,5 | ALB |
| 2.2 i 16V | 9D3/FZB/FZC | E | 2230 | EW12J4 | M | | PIP+ | 01/02 ▸ 09/04 | 133054 | **732599** | 378,6 562,5 | ALB |
| 2.2 i 16V | 9D3/FZ2/FZ6/FZE | E | 2230 | EW12J4 | A | + | 2xLEx+ | 05/00 ▸ | 133077 | | 378,6 562,5 | ALB |
| 2.2 i 16V | 9D3/FZ2/FZ6/FZE | E | 2230 | EW12J4 | A | + | 2xLEx+ | 05/00 ▸ 09/04 | 1330R0 | | 378,6 562,5 | ALB |
| 3.0 i V6 24V | 9DX/FX5/FXC | E | 2946 | ES9J4S | M | + | | 05/00 ▸ 09/04 | 1330K3 | **735068** | 380 707 | ALB |
| 3.0 i V6 24V | 9DXFXB | E | 2946 | ES9J4S | M | | | 01/02 ▸ 09/04 | 1330K3 | **735068** | 380 707 | ALB |
| 3.0 i V6 24V | 9DX/FX2/FX6/FXE | E | 2946 | ES9J4S | A | + | | 05/00 ▸ 09/04 | 1330K3 | **735068** | 380 707 | ALB |
| 3.0 i V6 24V ▸ 9638 | 9DX/FX5/FXC | E | 2946 | ES9J4S | M | + | | 05/00 ▸ 03/03 | 1331LK | **734336** | 380 694 | CBS |
| 3.0 i V6 24V ▸ 9638 | 9DXFX5 | E | 2946 | ES9J4S | M | + | | 05/00 ▸ 03/03 | 133080 | **734336** | 380 694 | CBS |
| 3.0 i V6 24V ▸ 9638 | 9DXFXC | E | 2946 | ES9J4S | M | | | 01/02 ▸ 03/03 | 133080 | **734336** | 380 694 | CBS |
| 2.0 HDi | 9DR/HSB/HZB | D | 1997 | DW10ATED | M | + | | 05/00 ▸ 09/04 | 133063 | **732598** | 379 562,5 | ALB |
| 2.0 HDi | 9DRHZB | D | 1997 | DW10ATED | M | | | 01/02 ▸ 09/04 | 133063 | **732598** | 379 562,5 | ALB |
| 2.2 HDi 16V | 9D4HXB | D | 2179 | DW12TED4 | M | + | | 05/00 ▸ | 133078 | **734280** | 380 558 | ALB |
| 2.2 HDi 16V | 9D4HXB | D | 2179 | DW12TED4 | M | | | 01/02 ▸ | 133078 | **734280** | 380 558 | ALB |
| 2.2 HDi 16V | 9D4HXE | D | 2179 | DW12TED4 | A | + | | 09/00 ▸ | 133079 | **734282** | 380 558 | ALB |
| 2.2 HDi 16V | 9D4HXE | D | 2179 | DW12TED4 | A | | | 09/00 ▸ 09/04 | 1330Q6 | **734282** | 380 558 | ALB |

## 607 (2004>)

| | | | | | | | | | | | | |
|---|---|---|---|---|---|---|---|---|---|---|---|---|
| 2.2 i 16V | 9U3FZC | E | 2230 | EW12J4 | M | + | PIP+ | 10/04 ▸ | 133054 | **732599** | 378,6 562,5 | ALB |
| 2.2 i 16V | 9U3/FYH/FZC | E | 2230 | EW12J4 | M | | PIP+ | 10/04 ▸ | 133054 | **732599** | 378,6 562,5 | ALB |
| 2.2 i 16V | 9U3FZF | E | 2230 | EW12J4 | A | + | 2xLEx+ | 10/04 ▸ | 1330R0 | | 378,6 562,5 | ALB |
| 2.2 i 16V | 9U3FYH | E | 2230 | EW12J4 | A | | PIP+ | 01/06 ▸ | 1331EE | **732599** | 378,6 562,5 | ALB |
| 3.0 i V6 24V | 9UXFVJ | E | 2946 | ES9A | A | + | | 10/04 ▸ | 1330K3 | **735068** | 380 707 | ALB |
| 3.0 i V6 24V | 9UXFVJ | E | 2946 | ES9A | A | | | 10/04 ▸ | 1330K3 | **735068** | 380 707 | ALB |
| 2.0 HDi | 9URHSB | D | 1997 | DW10ATED | M | + | | 10/04 ▸ | 133063 | **732598** | 379 562,5 | ALB |
| 2.0 HDi | 9URHSB | D | 1997 | DW10ATED | M | | | 10/04 ▸ | 1331FT | **732598** | 379 562,5 | ALB |
| 2.2 HDi 16V | 9U4HXG | D | 2179 | DW12TED4 | M | + | | 10/04 ▸ | 133078 | **734280** | 380 558 | ALB |
| 2.2 HDi 16V | 9U4HTH | D | 2179 | DW12BTED4 | M | + | | 06/06 ▸ | 1330P7 | | 375 478 | CBS |
| 2.2 HDi 16V | 9U4HXG | D | 2179 | DW12TED4 | M | | | 10/04 ▸ | 133078 | **734280** | 380 558 | ALB |
| 2.2 HDi 16V | 9U4HXE | D | 2179 | DW12TED4 | A | + | | 10/04 ▸ | 1330Q6 | **734282** | 380 558 | ALB |
| 2.2 HDi 16V ▸ 10492 | 9U4HXE | D | 2179 | DW12TED4 | A | + | | 10/04 ▸ 07/05 | 133079 | **734282** | 380 558 | ALB |
| 2.7 HDi 24V | 9UUHZJ | D | 2720 | DT17BTED4 | A | + | | 10/04 ▸ | 1330P7 | | 375 478 | CBS |

## 806 (94>98)

| | | | | | | | | | | | | |
|---|---|---|---|---|---|---|---|---|---|---|---|---|
| 1.8 i | 221LA2 | E | 1761 | XU7JP | M | + | TSW | 06/95 ▸ 09/98 | 1301P2 | **731166** | 670 470 | ALM |
| 1.8 i | 221LA2 | E | 1761 | XU7JP | M | - | VCAP TSW | 06/95 ▸ 09/98 | 1301P1 | **731165** | 600 470 | ALM |
| 2.0 i Turbo | 221RA2 | E | 1998 | XU10J2TE | M | +/- | TSW | 07/94 ▸ 09/98 | 1301P3 | **731166** | 670 470 | ALM |
| 2.0 i | 221/RB2/RB9 | E | 1998 | XU10J2C | M | + | TSW | 07/94 ▸ 09/98 | 1301P2 | **731166** | 670 470 | ALM |
| 2.0 i | 221/RB2/RB9 | E | 1998 | XU10J2C | M | - | VCAP TSW | 07/94 ▸ 09/98 | 133073 | **731165** | 600 470 | ALM |
| 1.9 TD | 221/DA2/DC2/DH2 | D | 1905 | XUD9BTF,XUD9TE,XUD9TEF | M | + | TSW | 08/94 ▸ 09/98 | 1301Y7 | **731168** | 670 470 | ALM |
| 1.9 TD | 221/DA2/DC2/DH2 | D | 1905 | XUD9BTF,XUD9TE,XUD9TEF | M | - | TSW | 08/94 ▸ 09/98 | 1301Y4 | **731168** | 670 470 | ALM |
| 2.1 TD | 221PA2 | D | 2088 | XUD11BTE | M | + | TSW | 06/96 ▸ 09/98 | 1301Y7 | **731168** | 670 470 | ALM |
| 2.1 TD | 221PA2 | D | 2088 | XUD11BTE | M | - | TSW | 06/96 ▸ 09/98 | 1301Y4 | **731168** | 670 470 | ALM |

## 806 (98>2002)

| | | | | | | | | | | | | |
|---|---|---|---|---|---|---|---|---|---|---|---|---|
| 1.8 i | 221LA2 | E | 1761 | XU7JP | M | + | TSW | 10/98 ▸ 05/02 | 1301P2 | **731166** | 670 470 | ALM |
| 1.8 i | 221LA2 | E | 1761 | XU7JP | M | - | VCAP TSW | 10/98 ▸ 05/02 | 1301P1 | **731165** | 600 470 | ALM |
| 2.0 i 16V | AFRFNC | E | 1997 | EW10J4 | M | + | TSW | 07/00 ▸ 05/02 | 1301P3 | **731166** | 670 470 | ALM |

Radiator Radiateur Motorkühler Radiatore di raffreddamento Radiator Radyatör Радиатор Radiador vízhűtő Vodní chladič Radiator Ψυγείο



• **New** Nouveau **Nuevo** Novo **Nuovo** Nieuw **Neu** Nowość **Yeni** Новый Νέο **Nový**

| Type Ctr. | | CC | | AC | | | OE | Valeo | DIM. | TECH |
|---|---|---|---|---|---|---|---|---|---|---|
| **PEUGEOT (.../...)** | | | | | | | | | | |
| **806 (98>2002) (.../...)** | | | | | | | | | | |
| 2.0 i 16V AFRFNC | E | 1997 | EW10J4 | M | - | VCAP TSW | 07/00 ▸ 05/02 | 133073 | **731165** | 600 470 ALM |
| 2.0 i 16V AFRFNF | E | 1997 | EW10J4 | A | +/- | TSW | 07/00 ▸ 05/02 | 1301P3 | **731166** | 670 470 ALM |
| 2.0 i,2.0 i 16V 221RB2 ; AFRFVB | E | 1998 | XU10J2C,XU10J4R | M | + | TSW | 10/98 ▸ 05/02 | 1301P2 | **731166** | 670 470 ALM |
| 2.0 i Turbo CT 221RA2 | E | 1998 | XU10J2TE | M | + | TSW | 10/98 ▸ 05/02 | 1301P3 | **731166** | 670 470 ALM |
| 2.0 i,2.0 i 16V AFRFVB ; 221/RA2/RB2<br>2.0 i Turbo CT<br>▸ 08210 | E | 1998 | XU10J2C,XU10J2TE,XU10J4R | M | - | VCAP TSW | 10/98 ▸ 05/99 | 1301P1 | **731165** | 600 470 ALM |
| 2.0 i,2.0 i 16V AFRFVB ; 221/RA2/RB2<br>2.0 i Turbo CT<br>▸ 08210 | E | 1998 | XU10J2C,XU10J2TE,XU10J4R | M | - | VCAP TSW | 10/98 ▸ 05/02 | 133073 | **731165** | 600 470 ALM |
| 1.9 TD 221DH2 | D | 1905 | XUD9BTF | M | + | TSW | 10/98 ▸ 05/02 | 1301Y7 | **731168** | 670 470 ALM |
| 1.9 TD 221DH2 | D | 1905 | XUD9BTF | M | - | TSW | 10/98 ▸ 05/02 | 1301Y4 | **731168** | 670 470 ALM |
| 2.0 HDi AFRHZA | D | 1997 | DW10ATED | M | +/- | TSW | 08/99 ▸ 05/02 | 1330E3 | **732692** | 669 470 ALB |
| 2.0 HDi 16V AFRHWB | D | 1997 | DW10ATED4 | M | +/- | TSW | 01/01 ▸ 05/02 | 1301Y7 | **731168** | 670 470 ALM |
| 2.1 TD 221PA2 | D | 2088 | XUD11BTE | M | + | TSW | 10/98 ▸ 05/02 | 1301Y7 | **731168** | 670 470 ALM |
| 2.1 TD 221PA2 | D | 2088 | XUD11BTE | M | - | TSW | 10/98 ▸ 05/02 | 1301Y4 | **731168** | 670 470 ALM |
| **807** | | | | | | | | | | |
| 2.0 i 16V EARFNC ; EBRFNC | E | 1997 | EW10J4 | M | +/- | | 06/02 ▸ 10/05 | 1330A4 | **732830** | 465 551,3 ALM |
| 2.0 i 16V EARFNC ; EBRFNC | E | 1997 | EW10J4 | M | +/- | | 06/02 ▸ 10/05 | 1331ZZ | **732881** | 464 562,8 ALB |
| 2.0 i 16V EBRFNF | E | 1997 | EW10J4 | A | +/- | | 06/02 ▸ 10/05 | 1330H8 | **732944** | 464 563 ALB |
| 2.0 i 16V EBRFJF | E | 1997 | EW10A | A | +/- | | 10/05 ▸ | 1330J6 | **732945** | 464 563 ALB |
| 2.0 i 16V EARFNE ; EBRFNE | E | 1997 | EW10J4 | A | | | 07/03 ▸ 10/05 | 1330H8 | **732944** | 464 563 ALB |
| 2.2 i 16V EA3FZC ; EB3FZC | E | 2230 | EW12J4 | M | + | | 06/02 ▸ 09/05 | 1330A5 | **732880** | 464 562,8 ALB |
| 3.0 i V6 24V EAXFWF ; EBXFWF | E | 2946 | ES9J4S | A | + | | 06/02 ▸ 09/05 | 1330K3 | **735068** | 380 707 ALB |
| 2.0 HDi 16V EARHTB ; EBRHTB | D | 1997 | DW10ATED4 | M | +/- | | 06/02 ▸ 05/06 | 1331ZZ | **732881** | 464 562,8 ALB |
| 2.0 HDi 16V EAR/HME ; EBR/HME HWB | D | 1997 | DW10ATED4 | A | +/- | | 03/03 ▸ 10/06 | 1330J6 | **732945** | 464 563 ALB |
| 2.0 HDi 16V EARHWB | D | 1997 | DW10ATED4 | A | | | 03/03 ▸ 04/06 | 1330J6 | **732945** | 464 563 ALB |
| 2.2 HDi 16V EA4/HWB/HWG ; EB4 HWB/HWG | D | 2179 | DW12TED4 | M | +/- | | 06/02 ▸ 06/06 | 1331ZZ | **732881** | 464 562,8 ALB |
| **1007** | | | | | | | | | | |
| 1.4 i,1.4 i 16V KMK/FUC/FVB | E | 1360 | ET3J4,TU3A,TU3JP | M | + | | 04/05 ▸ | 1330Q0 | **734921** | 380 414,5 ALM |
| 1.4 i,1.4 i 16V KMK/FUC/FVB | E | 1360 | ET3J4,TU3A,TU3JP | M | + | | 04/05 ▸ 07/10 | 1330C2 | **732831** | 380 403,3 ALM |
| 1.4 i,1.4 i 16V KMK/FUC/FVB | E | 1360 | ET3J4,TU3A,TU3JP | M | - | | 04/05 ▸ | 1330C0 | **732831** | 380 403,3 ALM |
| 1.6 i 16V KMNFUC | E | 1587 | TU5JP4 | M | + | | 04/05 ▸ 07/10 | 1330C2 | **732831** | 380 403,3 ALM |
| 1.6 i 16V KMNFUC | E | 1587 | TU5JP4 | M | + | | 04/05 ▸ | 1330Q0 | **734921** | 380 414,5 ALM |
| 1.6 i 16V KMNFUC | E | 1587 | TU5JP4 | M | - | | 04/05 ▸ | 1330C0 | **732831** | 380 403,3 ALM |
| 1.6 i 16V KMNFUC | E | 1587 | TU5JP4 | M | | | 11/05 ▸ 07/10 | 1330C2 | **732831** | 380 403,3 ALM |
| 1.4 HDi KM8/HXB/HZB | D | 1398 | DV4TD | M | + | LEx+ | 04/05 ▸ 11/07 | 1330E6 | **732930** | 378,6 405,5 ALB |
| 1.4 HDi KM8/HXB/HZB | D | 1398 | DV4TD | M | - | LEx+ | 04/05 ▸ 11/07 | 1330E5 | **732930** | 378,6 405,5 ALB |
| 1.4 HDi KM8HZC | D | 1398 | DV4TD | M | | LEx+ | 05/05 ▸ 07/10 | 1330E5 | **732930** | 378,6 405,5 ALB |
| 1.6 HDi 16V KM9HZC | D | 1560 | DV6TED4 | M | +/- | | 02/07 ▸ 07/10 | 1330P8 | **734398** | 378 558 ALB |
| **3008** | | | | | | | | | | |
| 1.6 THP 150 16V 0U5/FS0/FS8/FV8/FW0<br>1.6 THP 156 16V FXH<br>1.6 VTi 120 16V | E | 1598 | EP6,EP6C,EP6CDT,EP6DT | M | | | 09/09 ▸ | 1330S8 | **735091** | 378,6 562,6 ALB |
| 1.6 THP 156 16V 0U5FVA | E | 1598 | EP6CDT | A | | | 01/10 ▸ | 1330W2 | **734338** | 378,6 568,8 ALB |
| 1.6 HDi 110 16V 0U9HZH | D | 1560 | DV6TED4 | M | | | 09/09 ▸ | 1330W2 | **734338** | 378,6 568,8 ALB |
| **4007** | | | | | | | | | | |
| 2.2 HDi 16V VV4HNH | D | 2179 | DW12MTED4 | M | + | | 07/07 ▸ | 1330V1 | **735200** | 700 402 ALB |
| **5008** | | | | | | | | | | |
| 1.6 THP 156 16V 0A5/FS0/FV8/FW0<br>1.6 VTi 120 16V 0E5/FV8/FW0 | E | 1598 | EP6,EP6C,EP6CDT | M | | | 09/09 ▸ | 1330S8 | **735091** | 378,6 562,6 ALB |
| 1.6 THP 156 16V 0A5FVA | E | 1598 | EP6CDT | A | | | 04/10 ▸ | 1330S8 | **735091** | 378,6 562,6 ALB |
| 1.6 HDi 110 16V 0A9HZH ; 0E9HZH | D | 1560 | DV6TED4 | M | | | 09/09 ▸ | 1330W2 | **734338** | 378,6 568,8 ALB |
| **RCZ** | | | | | | | | | | |
| 1.6 THP 156 16V 4J5FV8 | E | 1598 | EP6CDT | M | | | 05/10 ▸ | 1330S8 | **735091** | 378,6 562,6 ALB |
| 1.6 THP 156 16V 4J5FV8 | E | 1598 | EP6CDT | A | | | 05/10 ▸ | 1330W2 | **734338** | 378,6 568,8 ALB |
| **PEUGEOT** | | | | | | | | | | |
| **BOXER (94>2001)** | | | | | | | | | | |
| 2.0 231B12 ; 232J12 | E | 1998 | XU102CU | M | +/- | TSW | 02/94 ▸ | 1301JK | **730995** | 700 414,5 CBS |

# PEUGEOT (.../...)

## BOXER (94>2001) (.../...)

| Type Ctr. | | CC | | AC | | 2+3 | OE | Valeo | DIM. | TECH |
|---|---|---|---|---|---|---|---|---|---|---|
| 2.0 i 231/A22/A24/B22/B24/C22/G22/H22/V22 ; 232 B22/B24/G22/H22/J22/K22/L22/V22 ; 233/B22 G22/H22/J22/K22/L22 | E | 1998 | XU10J2U | M | + | TSW | 02/94 ▸ | 1301P6 | **731611** | 790 414,5 | ALM |
| 2.0 i 231/A22/A24/A34/B22/B24/C22/C24/G22/H22/V22 V24 ; 232/B22/B24/G22/H22/J22/K22/L22/V22 V24 ; 233/B22/G22/H22/J22/K22/L22 | E | 1998 | XU10J2U | M | - | TSW | 02/94 ▸ | 1301N3 | **730997** | 790 414,5 | ALM |
| 2.0 i 231/A22/A24/B22/B24/C22/G22/H22/V22 ; 232 B22/B24/G22/H22/J22/K22/L22/V22 ; 233/B22 G22/H22/J22/K22/L22 | E | 1998 | XU10J2U | M | | TSW | 02/94 ▸ 12/01 | 1330E4 | **731611** | 790 414,5 | ALM |
| 1.9 D,1.9 TD 231/A32/A62/A72/A82 B72/B82/C32/C62/C72/C82/V82 ; 232/B72/B82 | D | 1905 | XUD9A,XUD9AU,XUD9TEF,XUD9UTF | M | + | TSW | 02/94 ▸ 12/01 | 1330E4 | **731611** | 790 414,5 | ALM |
| 1.9 D,1.9 TD 232B72 ; 231/A32/A62 A72/C72 | D | 1905 | XUD9A,XUD9TEF | M | + | TSW | 02/94 ▸ 12/01 | 133017 | **731611** | 790 414,5 | ALM |
| 1.9 D,1.9 TD 231/A32/A62/A82/B72 B82/C72 | D | 1905 | XUD9A,XUD9TEF,XUD9UTF | M | - | TSW | 02/94 ▸ 12/01 | 133017 | **731611** | 790 414,5 | ALM |
| 1.9 D,1.9 TD 232B82 ; 231/A82/C32 C62/C82/V82 | D | 1905 | XUD9A,XUD9AU,XUD9UTF | M | | AC-, TSW | 07/97 ▸ 12/01 | 133017 | **731611** | 790 414,5 | ALM |
| 2.0 HDi 231/AJ2/VJ2 | D | 1997 | DW10TD | M | + | TSW | 09/01 ▸ | 133098 | **731611** | 790 414,5 | ALM |
| 2.0 HDi 231/AJ2/BJ2/VJ2 | D | 1997 | DW10TD | M | - | TSW | 09/01 ▸ 12/01 | 133097 | **731611** | 790 414,5 | ALM |
| 2.5 D,2.5 TD,2.5 TDi 231/A52/B02/B52/B54 B59/B92/B94/C02/C42/G52/H52/J52/V52/V54/V94 232/B02/B52/B54/B92/B94/G52/H52/H92/J02/J52 J54/J92/J94/K52/K54/L52/L54/L92/V52/V54/V94 233/B52/G52/H52/J52/J54/J92/K52/K54/L52 L54 ; 234/G52/K52 | D | 2446 | DJ5,DJ5T,DJ5TED | M | + | TSW | 02/94 ▸ | 1301N6 | **730999** | 1000 414 | CBS |
| 2.5 TDi 231/B42/B44/C42/C44 J42/V42 ; 232/B42/B44/J42/J44/V44 ; 233/B42 J42/J44 | D | 2446 | DJ5TED | M | + | TSW | 12/96 ▸ 12/01 | 1330E4 | **731611** | 790 414,5 | ALM |
| 2.5 D,2.5 TD 231/B02/B59/B92/C02 V52 ; 232/B02/B52/B92/G52/J02/J52/J92/K52 L92/V52 ; 233/J52/J92 | D | 2446 | DJ5,DJ5T | M | - | TSW | 02/94 ▸ 06/95 | 1330E4 | **731611** | 790 414,5 | ALM |
| 2.5 D,2.5 TD,2.5 TDi 231/A52/B02/B52/B54 B59/B92/B94/C02/C42/G52/H52/J52/V52/V94 232/B02/B52/B54/B92/B94/G52/H52/H92/J02/J52 J54/J92/J94/K52/K54/L52/L54/L92/V52/V94 233/B52/G52/H52/J52/J54/J92/K52/K54/L52 L54 ; 234/G52/K52 | D | 2446 | DJ5,DJ5T,DJ5TED | M | - | TSW | 07/95 ▸ 12/01 | 133017 | **731611** | 790 414,5 | ALM |
| 2.5 TDi 231/B42/B44/C42/C44 G42/H42/J42/U42/V42 ; 232/B42/B44/F42/G42 H42/H44/J42/J44/K42/L44/N42/N44/V44 ; 233 B42/F42/G42/H42/J42/J44/K4/L42/L44/N42/N44 234/G42/K42 | D | 2446 | DJ5TED | M | - | TSW | 12/96 ▸ 12/01 | 1301N3 | **730997** | 790 414,5 | ALM |
| 2.8 D,2.8 TD 232 | D | 2798 | 8140-43,8140-63 | M | +/- | TSW | 06/99 ▸ 12/01 | 133017 | **731611** | 790 414,5 | ALM |
| 2.8 HDi 231/AL2/BL2/BL4/CH2 CL2/GH2/GL2/HL2/JL2/VH2/VL2 ; 232/BH2/BL2 BL4/GH2/GL2/GL4/HL2/HL4/JH2/JL2/JL4/KH2/KL2 KL4/LL2/LL4/VH2/VL2 ; 233/BL2/GH2/GL2/HL2 JH2/JL2/JL4/KH2/KL2/KL4/LL2/LL4 ; 234/GH2 GL2/KH2/KL2 | D | 2798 | 8140-43S | M | + | TSW | 09/00 ▸ 12/01 | 133098 | **731611** | 790 414,5 | ALM |
| 2.8 HDi 231/AL2/BL2/BL4/CH2 CL2/GH2/GL2/HL2/JL2/VH2/VL2 ; 232/BH2/BL2 BL4/GH2/GL2/GL4/HL2/HL4/JH2/JL2/JL4/KH2/KL2 KL4/LL2/LL4/VH2/VL2 ; 233/BL2/GH2/GL2/HL2 JH2/JL2/JL4/KH2/KL2/KL4/LL2/LL4 ; 234/GH2 GL2/KH2/KL2 | D | 2798 | 8140-43S | M | - | TSW | 09/00 ▸ 12/01 | 133097 | **731611** | 790 414,5 | ALM |

## BOXER (2002>2006)

| | | | | | | | | | | | |
|---|---|---|---|---|---|---|---|---|---|---|---|
| 2.0 i ZAT/MF ; ZBT/MF/MP ; ZCT/MF/MM | E | 1998 | XU10J2U | M | +/- | TSW | 01/02 ▸ | 1330F1 | **731611** | 790 414,5 | ALM |
| 2.0 i ZAT/MF ; ZBT/MF/MP ; ZCT/MF/MM | E | 1998 | XU10J2U | M | +/- | | 01/02 ▸ | 1330C8 | | 790 414,5 | ALM |
| 2.0 i ZAT/MF ; ZBT/MF/MP ; ZCT/MF/MM | E | 1998 | XU10J2U | M | +/- | TSW | 01/02 ▸ 06/06 | 1330L8 | **731611** | 790 414,5 | ALM |
| 2.0 HDi ZAA/MF/MP ; ZBA/MD MFA/MNB/MP | D | 1997 | DW10UTD | M | - | TSW | 01/02 ▸ 06/06 | 133097 | **731611** | 790 414,5 | ALM |
| 2.2 HDi ZAR/MFA/MP ; ZBR/MD MF/MH/MN/MP ; ZCR/MD/MF/MH/MM | D | 2179 | DW12TED | M | - | TSW | 01/02 ▸ 06/06 | 133097 | **731611** | 790 414,5 | ALM |
| 2.2 HDi ZARMFA | D | 2179 | DW12TED | M | | TSW | 01/02 ▸ 06/06 | 133097 | **731611** | 790 414,5 | ALM |
| 2.8 HDi ZBZ/MA/MD/MF/MG/MH MN ; ZCZ/MA/MC/MD/MF/MG/MH/MN | D | 2798 | F28TDCR | M | +/- | | 04/04 ▸ 06/06 | 133080 | **734336** | 380 694 | CBS |
| 2.8 HDi ZAP/MF/MP ; ZBP/MD MFB/MH/MP/WF/WN ; ZCP/MD/MF/MH/MM/WA/WC/WD WN | D | 2798 | F28TDCR | M | - | TSW | 01/02 ▸ 06/06 | 133097 | **731611** | 790 414,5 | ALM |

Radiator Radiateur Motorkühler Radiatore di raffreddamento Radiator Radyatör Radiador Радиатор vízhűtő Vodní chladič Radiator Ψυγείο



• **New** Nouveau **Nuevo** Novo **Nuovo** Nieuw **Neu** Nowość **Yeni** Новый Νέο **Nový**

| Type Ctr. | | CC | | AC | | | | OE | Valeo | DIM. | TECH |
|---|---|---|---|---|---|---|---|---|---|---|---|
| **PEUGEOT (.../...)** | | | | | | | | | | | |
| **BOXER (2002>2006) (.../...)** | | | | | | | | | | | |
| 2.8 HDi ZBP/MH/MNC | D | 2798 | F28TDCR | M | | TSW | 01/02 ▸ 06/06 | 133097 | **731611** | 790 414,5 | ALM |
| 2.8 HDi ZAP/AP ; ZCPAF ; ZBP AF/AP | D | 2798 | F28TDCR | A | +/- | TSW | 01/03 ▸ 06/06 | 1330L8 | **731611** | 790 414,5 | ALM |
| **EXPERT (95>2003)** | | | | | | | | | | | |
| 1.6 i 223AA2 ; 224AA2 ; 222/AA2 | E | 1581 | 160A | M | + | TSW | 09/95 ▸ 12/03 | 1301P2 | **731166** | 670 470 | ALM |
| 1.6 i 223AA2 ; 224AA2 ; 222/AA2 | E | 1581 | 160A | M | - | VCAP TSW | 09/95 ▸ 12/03 | 133073 | **731165** | 600 470 | ALM |
| 1.6 i 223AA2 ; 224AA2 ; 222/AA2 ▸ 08210 | E | 1581 | 160A | M | - | VCAP TSW | 09/95 ▸ 05/99 | 1301P1 | **731165** | 600 470 | ALM |
| 1.6 i 224AA2 ▸ 08210 | E | 1581 | 160A | M | - | TSW | 09/95 ▸ 05/99 | 1301TL | **730983** | 610 377,5 | ALM |
| 1.8 i 222/LA9/LB9 ; 224/LA9/LB9 | E | 1761 | XU7JP | M | + | TSW | 07/96 ▸ 12/03 | 1301P2 | **731166** | 670 470 | ALM |
| 1.8 i 222/LA9/LB9 ; 224/LA9/LB9 | E | 1761 | XU7JP | M | - | VCAP TSW | 07/96 ▸ 12/03 | 133073 | **731165** | 600 470 | ALM |
| 2.0 i 16V BDRFNC ; BZRFNC BAR/FNC | E | 1997 | EW10J4 | M | + | TSW | 09/00 ▸ 12/03 | 1301P3 | **731166** | 670 470 | ALM |
| 2.0 i 16V BDRFNC ; BZRFNC BAR/FNC | E | 1997 | EW10J4 | M | - | VCAP TSW | 09/00 ▸ 12/03 | 133073 | **731165** | 600 470 | ALM |
| 2.0 i 16V BARFNF | E | 1997 | EW10J4 | A | +/- | TSW | 09/01 ▸ 12/03 | 1301P3 | **731166** | 670 470 | ALM |
| 2.0 i 16V BDRFNF | E | 1997 | EW10J4 | A | + | TSW | 01/01 ▸ 12/03 | 1301P3 | **731166** | 670 470 | ALM |
| 1.9 D BBWJZA ; BDWJZA ; BEWJZA ; BAW/JZA | D | 1868 | DW8 | M | + | TSW | 05/98 ▸ 12/99 | 1301Y7 | **731168** | 670 470 | ALM |
| 1.9 D BBWJZA ; BAW/JZA ; BEWJZA ; BDW/JYB/JZA BTW/JYB/JZA ; BZW/JYB/JZA | D | 1868 | DW8,DW8B | M | + | TSW | 12/99 ▸ 12/03 | 1330E3 | **732692** | 669 470 | ALB |
| 1.9 D BBWJZA ; BAW/JZA ; BEWJZA ; BDW/JYB/JZA BTW/JYB/JZA ; BZW/JYB/JZA | D | 1868 | DW8,DW8B | M | - | TSW | 05/98 ▸ 12/03 | 1301P3 | **731166** | 670 470 | ALM |
| 1.9 D,1.9 TD 222/DA2/DB2 ; 223 DA2/DB2/DH2 ; 225DA2 ; 226DA2 ; BWDHXA BYDHXA ; BZDHXA ; 224/DA2/DB2/DH2 | D | 1905 | XUD9A,XUD9BTF,XUD9TEF | M | + | TSW | 09/95 ▸ 12/03 | 1301Y7 | **731168** | 670 470 | ALM |
| 1.9 TD 222/DA2 ; 223/DA2 DH2 ; 225DA2 ; 226DA2 ; BWDHXA ; BYDHXA BZDHXA ; 224/DA2/DH2 | D | 1905 | XUD9BTF,XUD9TEF | M | - | TSW | 09/95 ▸ 12/03 | 1301Y4 | **731168** | 670 470 | ALM |
| 1.9 D,1.9 TD 222/DB2 ; 223/DB2 DH2 ; 224/DB2/DH2 | D | 1905 | XUD9A,XUD9BTF | M | - | TSW | 09/95 ▸ | 1301Z2 | **731166** | 670 470 | ALM |
| 1.9 D,1.9 TD 222/DB2 ; 223/DB2 DH2 ; 224/DB2/DH2 | D | 1905 | XUD9A,XUD9BTF | M | - | TSW | 09/95 ▸ 12/03 | 1301P3 | **731166** | 670 470 | ALM |
| 2.0 HDi,2.0 HDi 16V BDRHZA ; BZRHWB | D | 1997 | DW10ATED,DW10ATED4 | M | +/- | TSW | 09/00 ▸ | 1301Y7 | **731168** | 670 470 | ALM |
| 2.0 HDi BCRHZB ; BAR/HZB BERHZB ; BHRHZB ; BDR/HXA/HXB/HZ/HZA/HZB BURHZB ; BWRHZB ; BSR/HXA/HXB/HZB ; BYR/HXA HXB/HZB ; BZR/HXA/HXB | D | 1997 | DW10ATED,DW10BTED,DW10CTED | M | | TSW | 09/00 ▸ 12/03 | 1330E3 | **732692** | 669 470 | ALB |
| 2.0 HDi 16V BDRHWB ; BTRHWB BZRHWB ; BAR/HWB | D | 1997 | DW10ATED4 | M | | TSW | 09/01 ▸ 12/03 | 1301Y7 | **731168** | 670 470 | ALM |
| **EXPERT II (2004>2006)** | | | | | | | | | | | |
| 2.0 i 16V BERFNC ; BXRFNC BZRFNC ; BBR/FNC | E | 1997 | EW10J4 | M | + | TSW | 01/04 ▸ 12/06 | 1301P3 | **731166** | 670 470 | ALM |
| 2.0 i 16V BERFNC ; BXRFNC BZRFNC ; BBR/FNC | E | 1997 | EW10J4 | M | - | VCAP TSW | 01/04 ▸ 12/06 | 133073 | **731165** | 600 470 | ALM |
| 2.0 i 16V BBRFNF ; BERFNF | E | 1997 | EW10J4 | A | + | TSW | 01/04 ▸ 12/06 | 1301P3 | **731166** | 670 470 | ALM |
| 2.0 i 16V BBRFNF ; BERFNF | E | 1997 | EW10J4 | A | - | VCAP TSW | 01/04 ▸ 12/06 | 133073 | **731165** | 600 470 | ALM |
| 1.9 D BVWJYB ; BXWJYB ; BZWJYB ; BTW/JYB | D | 1868 | DW8B | M | + | TSW | 01/04 ▸ 12/06 | 1330E3 | **732692** | 669 470 | ALB |
| 1.9 D BVWJYB ; BXWJYB ; BZWJYB ; BTW/JYB | D | 1868 | DW8B | M | - | TSW | 01/04 ▸ 12/06 | 1301P3 | **731166** | 670 470 | ALM |
| 2.0 HDi 16V BVRHWB ; BXRHWB BZRHWB ; BTR/HWB | D | 1997 | DW10ATED4 | M | +/- | TSW | 01/04 ▸ 12/06 | 1301Y7 | **731168** | 670 470 | ALM |
| 2.0 HDi,2.0 HDi 16V BBR/HXB/HZB ; BER HXB/HZB ; BTRHWB ; BURHZB ; BVRHWB ; BSR/HXB HZB ; BXRHWB ; BWR/HXB/HZB ; BYR/HXB/HZB BZR/HWB/HXB | D | 1997 | DW10ATED4,DW10BTED DW10BTED+L4 | M | +/- | TSW | 01/04 ▸ | 1330E3 | **732692** | 669 470 | ALB |
| **EXPERT II (2007>)** | | | | | | | | | | | |
| 2.0 i 16V XERFJC ; XSRFHC | E | 1997 | EW10A | M | | | 03/07 ▸ | 1331ZZ | **732881** | 464 562,8 | ALB |
| **J5** | | | | | | | | | | | |
| 1.8 GPL 280A11 | G | 1796 | XM7T-G | M | - | TSW | 11/81 ▸ 05/85 | 130551 | **•883764** | 663 414 | ALM |
| 1.8 GPL 280A11 | G | 1796 | XM7T-G | M | - | TSW | 05/85 ▸ 08/90 | 1300G0 | **811380** | 663 414 | ALM |
| 2.0 28G224 ; 280/B22/G22 | G | 1971 | XN1T-G | M | - | TSW | 11/81 ▸ 05/85 | 130551 | **•883764** | 663 414 | ALM |
| 2.0 28G224 ; 280/B22/G22 | G | 1971 | XN1T-G | M | - | TSW | 05/85 ▸ 08/90 | 1300G0 | **811380** | 663 414 | ALM |

# PEUGEOT (.../...)

## J5 (.../...)

| | | | CC | | AC | | | | OE | Valeo | DIM. | TECH |
|---|---|---|---|---|---|---|---|---|---|---|---|---|
| 1.8 | 280/A11/C11 | E | 1796 | XM7T,XM7T3 | M | - | TSW | 11/81 ▸ 05/85 | 130551 | •883764 | 663 414 | ALM |
| 1.8 | 280/A11/C11 ; 290/A11/C11 | E | 1796 | XM7T,XM7T3 | M | - | TSW | 05/85 ▸ 02/94 | 1300G0 | 811380 | 663 414 | ALM |
| 2.0 | 280/J32/K32 ; 290/A42/B42/B44/C42/C44/D42 G42/G44/J32/K32/K42 | E | 1971 | XN1TA | M | - | TSW | 11/81 ▸ 02/94 | 1300K1 | 811380 | 663 414 | ALM |
| 2.0 | 280/B22/C22/D22/G22/H22 | E | 1971 | XN1T | M | - | TSW | 11/81 ▸ 05/85 | 130551 | •883764 | 663 414 | ALM |
| 2.0 | 280/B22/C22/G22/H22 ; 290/B22/C22/G22 | E | 1971 | XN1T | M | - | TSW | 05/85 ▸ 02/94 | 1300G0 | 811380 | 663 414 | ALM |
| 1.9 D | 280/B62/C82 | D | 1905 | XUD9A | M | - | TSW | 07/87 ▸ 08/90 | 1300F7 | 883765 | 825 414 | ALM |
| 1.9 D | 290/A62/B62/C02/G62/M62/R62 | D | 1905 | XUD9A | M | - | TSW | 09/90 ▸ 02/94 | 1300J9 | 730040 | 663 414,5 | ALM |
| 1.9 D | 280/B62/C82 | D | 1905 | XUD9A | M | | TSW | 07/87 ▸ 08/90 | 1300J9 | 730040 | 663 414,5 | ALM |
| 1.9 TD | 290/A72/B72/C72/D72 G72/H72/V72 | D | 1929 | M705 | M | | TSW | 09/90 ▸ 02/94 | 1300K3 | 730040 | 663 414,5 | ALM |
| 2.5 D | 28B52D ; 280/A51/B52/C51/C52/D52/G52/H52/J52 X54 ; 2G921D ; 290/B52/B54/C52/C54/G52/G54 J52/K52 | D | 2500 | CRD93(651),CRD93(661),CRD93L | M | - | TSW | 11/81 ▸ 02/94 | 1300J9 | 730040 | 663 414,5 | ALM |
| 2.5 TD | 28B92D ; 280/B92/C92 C94/G92/H92/J92/K92/L92 ; 290/B92/B94/C92 C94/G92/G94/J92/K92 | D | 2500 | CRD93LS | M | - | TSW | 11/81 ▸ 02/94 | 1300K3 | 730040 | 663 414,5 | ALM |
| 2.5 D | 28B52D ; 2G921D ; 280/A51/B52/C51/C52/D52 G52/H52 | D | 2500 | CRD93(661) | M | | TSW | 01/84 ▸ 08/90 | 1300J9 | 730040 | 663 414,5 | ALM |

## PARTNER (96>2002)

| | | | | | | | | | | | | |
|---|---|---|---|---|---|---|---|---|---|---|---|---|
| 1.1 i,1.1 i GPL | 5AH/DZA/DZE/FXF 5DHDZE ; 5BH/DZD/DZE/FXF ; 5FH/DZD/DZE | E | 1124 | TU1JP,TU1M+ | M | +/- | TSW | 06/96 ▸ 11/02 | 1331CP | 732564 | 460 377 | ALM |
| 1.1 i,1.1 i GPL | 5AH/DZA/DZE/FXF 5DHDZE ; 5BH/DZD/DZE/FXF | E | 1124 | TU1JP,TU1M+ | M | +/- | TSW | 06/96 ▸ 11/02 | 133052 | 732564 | 460 377 | ALM |
| 1.1 i | 5FH/DZD/DZE | E | 1124 | TU1M+ | M | | TSW | 06/96 ▸ 11/02 | 133052 | 732564 | 460 377 | ALM |
| 1.1 i,1.1 i GPL | 5AH/DZA/DZE/FXF 5DHDZE ; 5BH/DZD/DZE/FXF ; 5FH/DZD/DZE | E | 1124 | TU1JP,TU1M+ | M | | TSW | 10/98 ▸ 11/02 | 133303 | 732563 | 610 377 | ALM |
| 1.1 i | 5BHDZD ; 5DHDZE ; 5AH/DZA ; 5FH/DZD/DZE ▸ 8025 | E | 1124 | TU1M+ | M | +/- | TSW 819752 | 06/96 ▸ 10/98 | 133007 | 731295 | 460 377,5 | ALM |
| 1.4,1.4 i | 5BK/5A2/5AG/FXD 5EK5AG ; 5CK/FXD/FXE ; 5FK/5A2/5AG/FXD/FXE FXF | E | 1360 | TU3.2,TU3JP | M | +/- | TSW | 06/96 ▸ 11/02 | 133008 | 731296 | 610 377,5 | ALM |
| 1.4,1.4 i,1.4 i GPL | 5BK/5A2/5AG/6C2/FXD FXE ; 5EK5AG ; 5CK/FXD/FXE ; 5FK/5A2/5AG/6C2 FWF/FXD/FXE/FXF | E | 1360 | TU3.2,TU3JP | M | +/- | TSW | 06/96 ▸ 11/02 | 133047 | 732563 | 610 377 | ALM |
| 1.4 i,1.4 i GPL | 5BK/6C2/FXD/FXE 5CK/FXD/FXE ; 5FK/6C2/FWF/FXD/FXE/FXF | E | 1360 | TU3JP | M | +/- | TSW | 07/01 ▸ 11/02 | 133302 | 732563 | 610 377 | ALM |
| 1.4 i GPL | 5FKFWF | E | 1360 | TU3JP | M | | TSW | 10/01 ▸ 11/02 | 133303 | 732563 | 610 377 | ALM |
| 1.6 i 16V | 5FN/FUF/FUU | E | 1587 | TU5JP4 | M | +/- | TSW | 09/00 ▸ 07/01 | 133047 | 732563 | 610 377 | ALM |
| 1.6 i 16V | 5FN/FUF/FUU | E | 1587 | TU5JP4 | M | +/- | TSW | 07/01 ▸ 11/02 | 133302 | 732563 | 610 377 | ALM |
| 1.6 i 16V | 5FNFUU | E | 1587 | TU5JP4 | M | | TSW | 01/01 ▸ 11/02 | 133008 | 731296 | 610 377,5 | ALM |
| 1.6 i 16V | 5FN/FUF/FUU | E | 1587 | TU5JP4 | M | | TSW | 07/01 ▸ 11/02 | 133303 | 732563 | 610 377 | ALM |
| 1.8 i | 5FLFXE | E | 1761 | XU7JB | M | +/- | TSW | 05/97 ▸ 11/02 | 133008 | 731296 | 610 377,5 | ALM |
| 1.8 i | 5FLFXE | E | 1761 | XU7JB | M | +/- | TSW | 05/97 ▸ 07/01 | 133047 | 732563 | 610 377 | ALM |
| 1.8 i | 5FLFXE | E | 1761 | XU7JB | M | | TSW | 07/01 ▸ 11/02 | 133303 | 732563 | 610 377 | ALM |
| 1.8 D | 5CA9AD ; 5FA9AD ; 5BA/9A2/9AD/9AG | D | 1769 | XUD7 | M | + | TSW | 06/96 ▸ 03/97 | 133057 | 732565 | 670 377,5 | ALM |
| 1.8 D | 5CA9AD ; 5FA9AD ; 5BA/9A2/9AD/9AG | D | 1769 | XUD7 | M | + | TSW | 03/97 ▸ 11/02 | 1331CW | 732577 | 670 377,5 | ALM |
| 1.8 D | 5CA9AD ; 5FA9AD ; 5BA/9A2/9AD/9AG | D | 1769 | XUD7 | M | - | TSW | 06/96 ▸ 03/97 | 133056 | 731570 | 670 377,5 | ALM |
| 1.8 D | 5CA9AD ; 5FA9AD ; 5BA/9A2/9AD/9AG | D | 1769 | XUD7 | M | - | PIP+ TSW | 03/97 ▸ 11/02 | 133041 | 732517 | 670 377,5 | ALM |
| 1.8 D | 5CA9AD ; 5FA9AD ; 5BA/9A2/9AD/9AG 7420 ▸ 7909 | D | 1769 | XUD7 | M | + | TSW | 02/97 ▸ 07/98 | 133024 | 731743 | 670 377,5 | ALM |
| 1.8 D | 5CA9AD ; 5FA9AD ; 5BA/9A2/9AD/9AG ▸ 7972 | D | 1769 | XUD7 | M | | TSW | 06/96 ▸ 09/96 | 133023 | 731744 | 670 377 | ALM |
| 1.8 D | 5BA9AD ; 5CA9AD 7420 ▸ 8025 | D | 1769 | XUD7 | M | - | TSW | 03/97 ▸ 10/98 | 1331S0 | 731744 | 670 377 | ALM |
| 1.9 D | 5CWJZE ; 5FWJZE ; 5BW/JZE/JZT | D | 1868 | DW8 | M | + | TSW | 10/98 ▸ 12/99 | 133042 | 732577 | 670 377,5 | ALM |
| 1.9 D | 5BW/JYF/JZE/JZT ; 5CW/JYF/JZE ; 5FW/JYF/JZE | D | 1868 | DW8,DW8B | M | + | TSW | 12/99 ▸ 07/01 | 133058 | 732620 | 668,8 377,5 | ALB |
| 1.9 D | 5BW/JYF/JZE/JZT ; 5CW/JYF/JZE ; 5FW/JYF/JZE | D | 1868 | DW8,DW8B | M | + | TSW | 07/01 ▸ 11/02 | 1330E2 | 734456 | 669 365 | ALB |
| 1.9 D | 5BW/JYF/JZE/JZT ; 5CW/JYF/JZE ; 5FW/JYF/JZE | D | 1868 | DW8,DW8B | M | - | PIP+ TSW | 10/98 ▸ 07/01 | 133041 | 732517 | 670 377,5 | ALM |
| 1.9 D | 5BW/JYF/JZE/JZT ; 5CW/JYF/JZE ; 5FW/JYF/JZE | D | 1868 | DW8,DW8B | M | - | PIP+ TSW | 07/01 ▸ 11/02 | 1330E1 | 732517 | 670 377,5 | ALM |
| 1.9 D | 5CD9BD ; 5DD9BD ; 5BD/9BD/JYE ; 5FD/9BD/JYE | D | 1905 | XUD9A | M | + | TSW | 06/96 ▸ 03/97 | 133057 | 732565 | 670 377,5 | ALM |
| 1.9 D | 5CD9BD ; 5DD9BD ; 5BD/9BD/JYE ; 5FD/9BD/JYE | D | 1905 | XUD9A | M | + | TSW | 03/97 ▸ 11/02 | 133042 | 732577 | 670 377,5 | ALM |
| 1.9 D | 5CD9BD ; 5BD/9BD/JYE ; 5FD/9BD/JYE | D | 1905 | XUD9A | M | + | TSW | 03/97 ▸ 10/98 | 133024 | 731743 | 670 377,5 | ALM |
| 1.9 D | 5CD9BD ; 5DD9BD ; 5BD/9BD/JYE ; 5FD/9BD/JYE | D | 1905 | XUD9A | M | - | TSW | 06/96 ▸ 03/97 | 133056 | 731570 | 670 377,5 | ALM |
| 1.9 D | 5CD9BD ; 5DD9BD ; 5BD/9BD/JYE ; 5FD/9BD/JYE | D | 1905 | XUD9A | M | - | PIP+ TSW | 03/97 ▸ 11/02 | 133041 | 732517 | 670 377,5 | ALM |

Radiator Radiateur Motorkühler Radiatore di raffreddamento Radiator Radyatör Radiador Радиатор vízhűtő Vodní chladič Radiator Ψυγείο



• **New** Nouveau **Nuevo** Novo **Nuovo** Nieuw **Neu** Nowość **Yeni** Новый Νέο **Nový**

| Type Ctr. | | CC | | AC | | | OE | Valeo | DIM. | TECH |
|---|---|---|---|---|---|---|---|---|---|---|
| **PEUGEOT (.../...)** | | | | | | | | | | |
| **PARTNER (96>2002) (.../...)** | | | | | | | | | | |
| 1.9 D 5CD9BD ; 5DD9BD ; 5BD/9BD/JYE ; 5FD/9BD/JYE ▸ 7972 | D | 1905 | XUD9A | M | | TSW | 06/96 ▸ 09/96 | 133023 | **731744** | 670 377 | ALM |
| 1.9 D 5CD9BD 7420 ▸ 8025 | D | 1905 | XUD9A | M | - | TSW | 03/97 ▸ 10/98 | 1331S0 | **731744** | 670 377 | ALM |
| 2.0 HDi 5BR/HYE/HYF ; 5CR HYE/HYF ; 5FR/HYE/HYF/HYU | D | 1997 | DW10TD | M | +/- | TSW | 05/00 ▸ 11/02 | 1330C9 | **732620** | 668,8 377,5 | ALB |
| **PARTNER (2002>)** | | | | | | | | | | |
| 1.4 i GNV,1.4 i GPL GCKFWB ; GJKFWB GBK/FWB/FWC | G | 1360 | TU3JP | M | | DN6, TSW | 04/03 ▸ 05/08 | 1330G2 | **732908** | 380 551,3 | ALM |
| 1.1 i GBHFXB | E | 1124 | TU1JP | M | +/- | DN6, TSW | 11/02 ▸ | 1330G3 | **732890** | 378 562,5 | ALB |
| 1.1 i GBHFXB | E | 1124 | TU1JP | M | +/- | DN6, TSW | 11/02 ▸ 05/08 | 1330G2 | **732908** | 380 551,3 | ALM |
| 1.1 i GBHFXB | E | 1124 | TU1JP | M | | DN6, TSW | 11/02 ▸ | 133084 | **732890** | 378 562,5 | ALB |
| 1.1 i GBHFXB | E | 1124 | TU1JP | M | | DN6, TSW | 11/02 ▸ | 133083 | **732908** | 380 551,3 | ALM |
| 1.4 i GBK/FVC/FWB ; GJK/FVC/FWB | E | 1360 | TU3A,TU3JP | M | +/- | DN6, TSW | 11/02 ▸ | 1330G3 | **732890** | 378 562,5 | ALB |
| 1.4 i GBK/FVC/FWB ; GJK/FVC/FWB | E | 1360 | TU3A,TU3JP | M | +/- | DN6, TSW | 11/02 ▸ 05/08 | 1330G2 | **732908** | 380 551,3 | ALM |
| 1.4 i GBKFWB ; GJKFWB | E | 1360 | TU3JP | M | | DN6, TSW | 11/02 ▸ | 133084 | **732890** | 378 562,5 | ALB |
| 1.4 i GBKFWB ; GJKFWB | E | 1360 | TU3JP | M | | DN6, TSW | 11/02 ▸ | 133083 | **732908** | 380 551,3 | ALM |
| 1.4 i GJK/FVC/FWB/FWC | E | 1360 | TU3A,TU3JP | M | | DN6, TSW | 11/02 ▸ 05/08 | 1330G2 | **732908** | 380 551,3 | ALM |
| 1.6 i 16V GCNFUB ; GJNFUB GBN/FUB | E | 1587 | TU5JP4 | M | +/- | DN6, TSW | 11/02 ▸ 05/08 | 1330G2 | **732908** | 380 551,3 | ALM |
| 1.6 i 16V GCNFUB ; GJNFUB GBN/FUB | E | 1587 | TU5JP4 | M | +/- | DN6, TSW | 11/02 ▸ | 1330G3 | **732890** | 378 562,5 | ALB |
| 1.6 i 16V GJNFUB | E | 1587 | TU5JP4 | M | | DN6, TSW | 11/02 ▸ | 133083 | **732908** | 380 551,3 | ALM |
| 1.6 i 16V GJNFUB | E | 1587 | TU5JP4 | M | | DN6, TSW | 11/02 ▸ | 133084 | **732890** | 378 562,5 | ALB |
| 1.6 i 16V GJN/FUB/FUC | E | 1587 | TU5JP4 | M | | DN6, TSW | 11/02 ▸ 05/08 | 1330G2 | **732908** | 380 551,3 | ALM |
| 1.9 D GCWJYB ; GEWJYB ; GJWJYB ; GBW/JYB | D | 1868 | DW8B | M | +/- | DN6, TSW | 11/02 ▸ | 1330N7 | **732892** | 378 562,8 | ALB |
| 1.9 D GCWJYB ; GEWJYB ; GJWJYB ; GBW/JYB | D | 1868 | DW8B | M | | DN6, TSW | 11/02 ▸ 05/08 | 1330F4 | **732892** | 378 562,8 | ALB |
| 2.0 HDi GCRHYB ; GERHYB GJRHYK ; GBR/HYB | D | 1997 | DW10TD | M | +/- | DN6, TSW | 11/02 ▸ 05/08 | 1330F4 | **732892** | 378 562,8 | ALB |
| 2.0 HDi GCRHYB ; GERHYB GBR/HYB ; GJR/HY/HYK | D | 1997 | DW10TD | M | +/- | DN6, TSW | 12/03 ▸ | 1330N7 | **732892** | 378 562,8 | ALB |
| 2.0 HDi GCR/HYB ; GJR/HY/HYB HYK | D | 1997 | DW10TD | M | | DN6, TSW | 11/02 ▸ 05/08 | 1330F4 | **732892** | 378 562,8 | ALB |
| **PARTNER (B9) (2008>)** | | | | | | | | | | |
| 1.6 i 16V 7AN/FRC ; 7JN/FRC FUC | E | 1587 | TU5JP4,TU5JP4B | M | +/- | | 05/08 ▸ 10/10 | 1330V5 | •**735090** | 378 562,5 | ALB |
| 1.6 i 16V 7CNFRC ; 7BN/FRC 7JN/FRC/FUC | E | 1587 | TU5JP4,TU5JP4B | M | | | 05/08 ▸ 10/10 | 1330V5 | •**735090** | 378 562,5 | ALB |
| 1.6 VTi 16V 7J5FS0 | E | 1598 | EP6C | M | | | 11/09 ▸ | 1330S8 | **735091** | 378,6 562,6 | ALB |
| 1.6 HDi 16V 7A9/HTC/HXC ; 7B9 HTC/HXC ; 7J9/HTC/HXC/HZC | D | 1560 | DV6ATED4,DV6AUTED4,DV6BTED4 DV6BUTED4,DV6TED4 | M | +/- | | 05/08 ▸ | 1330W2 | **734338** | 378,6 568,8 | ALB |
| 1.6 HDi 16V 7A9/HVC ; 7E9HXC 7F9HXC ; 7G9HXC ; 7C9/HTC/HXC ; 7M9HXC 7J9/HTC/HVC/HXC/HZC | D | 1560 | DV6ATED4,DV6AUTED4,DV6BTED4 DV6BUTED4,DV6TED4,DV6TED4B DV6TED4BU | M | | | 05/08 ▸ | 1330W2 | **734338** | 378,6 568,8 | ALB |
| **RANCH (96>2002)** | | | | | | | | | | |
| 1.4 i 5BKFXD ; 5FKFXE | E | 1360 | TU3JP | M | +/- | TSW | 06/96 ▸ 10/98 | 133008 | **731296** | 610 377,5 | ALM |
| 1.4 i 5BK/FXD ; 5FK/FWF/FXE | E | 1360 | TU3JP | M | +/- | TSW | 06/96 ▸ 07/01 | 133047 | **732563** | 610 377 | ALM |
| 1.4 i 5BK/FXD ; 5FK/FWF/FXE | E | 1360 | TU3JP | M | | TSW | 07/01 ▸ 11/02 | 133302 | **732563** | 610 377 | ALM |
| 1.8 i 5FLFXE | E | 1761 | XU7JB | M | +/- | TSW | 07/97 ▸ 07/01 | 133047 | **732563** | 610 377 | ALM |
| 1.8 i 5FLFXE | E | 1761 | XU7JB | M | +/- | TSW | 07/97 ▸ 10/98 | 133008 | **731296** | 610 377,5 | ALM |
| 1.8 i 5FLFXE | E | 1761 | XU7JB | M | | TSW | 07/01 ▸ 11/02 | 133303 | **732563** | 610 377 | ALM |
| 1.8 D 5BA9AD | D | 1769 | XUD7 | M | + | TSW | 06/96 ▸ 03/97 | 133057 | **732565** | 670 377,5 | ALM |
| 1.8 D 5BA9AD | D | 1769 | XUD7 | M | + | TSW | 06/96 ▸ 07/98 | 133024 | **731743** | 670 377,5 | ALM |
| 1.8 D 5BA9AD | D | 1769 | XUD7 | M | + | TSW | 03/97 ▸ 11/02 | 1331CW | **732577** | 670 377,5 | ALM |
| 1.8 D 5BA9AD | D | 1769 | XUD7 | M | - | TSW | 06/96 ▸ 03/97 | 133056 | **731570** | 670 377,5 | ALM |
| 1.8 D 5BA9AD | D | 1769 | XUD7 | M | - | PIP+ TSW | 03/97 ▸ 11/02 | 133041 | **732517** | 670 377,5 | ALM |
| 1.8 D 5BA9AD | D | 1769 | XUD7 | M | | TSW | 06/96 ▸ 10/98 | 133023 | **731744** | 670 377 | ALM |
| 1.9 D 5CWJZE ; 5FWJZE ; 5BW/JZE | D | 1868 | DW8 | M | + | TSW | 11/98 ▸ 12/99 | 1331CW | **732577** | 670 377,5 | ALM |
| 1.9 D 5CWJZE ; 5FWJZE ; 5BW/JYF/JZE | D | 1868 | DW8,DW8B | M | + | TSW | 11/98 ▸ 07/01 | 133058 | **732620** | 668,8 377,5 | ALB |
| 1.9 D 5CWJZE ; 5FWJZE ; 5BW/JYF/JZE | D | 1868 | DW8,DW8B | M | + | TSW | 07/01 ▸ 11/02 | 1330E2 | **734456** | 669 365 | ALB |
| 1.9 D 5CWJZE ; 5FWJZE ; 5BW/JYF/JZE | D | 1868 | DW8,DW8B | M | - | PIP+ TSW | 11/98 ▸ 07/01 | 133041 | **732517** | 670 377,5 | ALM |
| 1.9 D 5CWJZE ; 5FWJZE ; 5BW/JYF/JZE | D | 1868 | DW8,DW8B | M | - | PIP+ TSW | 07/01 ▸ 11/02 | 1330E1 | **732517** | 670 377,5 | ALM |
| 1.9 D 5CD9BD ; 5FDJYE ; 5BD/9BD | D | 1905 | XUD9A | M | + | TSW | 06/96 ▸ 07/98 | 133024 | **731743** | 670 377,5 | ALM |
| 1.9 D 5CD9BD ; 5FDJYE ; 5BD/9BD | D | 1905 | XUD9A | M | + | TSW | 06/96 ▸ 03/97 | 133057 | **732565** | 670 377,5 | ALM |

| Type Ctr. | | CC | | AC | | | OE | Valeo | DIM. | TECH |
|---|---|---|---|---|---|---|---|---|---|---|
| **PEUGEOT (.../...)** | | | | | | | | | | |
| **RANCH (96>2002) (.../...)** | | | | | | | | | | |
| 1.9 D 5CD9BD ; 5FDJYE ; 5BD/9BD | D | 1905 | XUD9A | M | + | TSW | 03/97 ▸ 11/02 | 133042 | **732577** 670 377,5 | ALM |
| 1.9 D 5CD9BD ; 5FDJYE ; 5BD/9BD | D | 1905 | XUD9A | M | - | TSW | 06/96 ▸ 03/97 | 133056 | **731570** 670 377,5 | ALM |
| 1.9 D 5CD9BD ; 5FDJYE ; 5BD/9BD | D | 1905 | XUD9A | M | - | PIP+ TSW | 03/97 ▸ 11/02 | 133041 | **732517** 670 377,5 | ALM |
| 1.9 D 5CD9BD ; 5FDJYE ; 5BD/9BD | D | 1905 | XUD9A | M | | TSW | 06/96 ▸ 10/98 | 133023 | **731744** 670 377 | ALM |
| 2.0 HDi 5BRHYF ; 5CRHYF | D | 1997 | DW10TD | M | +/- | TSW | 01/01 ▸ 11/02 | 1330C9 | **732620** 668,8 377,5 | ALB |
| **RANCH (2002>)** | | | | | | | | | | |
| 1.4 i GBKFWB | E | 1360 | TU3JP | M | +/- | DN6, TSW | 11/02 ▸ 05/08 | 1330G2 | **732908** 380 551,3 | ALM |
| 1.4 i GBKFWB | E | 1360 | TU3JP | M | +/- | DN6, TSW | 11/02 ▸ | 1330G3 | **732890** 378 562,5 | ALB |
| 1.4 i GBK/FVC ; GJK/FVC/FWB | E | 1360 | TU3A,TU3JP | M | | DN6, TSW | 11/02 ▸ 05/08 | 1330G2 | **732908** 380 551,3 | ALM |
| 1.6 i 16V GBNFUB ; GJNFUB | E | 1587 | TU5JP4 | M | | DN6, TSW | 11/02 ▸ 05/08 | 1330G2 | **732908** 380 551,3 | ALM |
| 1.9 D GBWJYB ; GCWJYB | D | 1868 | DW8B | M | +/- | DN6, TSW | 11/02 ▸ 05/08 | 1330F4 | **732892** 378 562,8 | ALB |
| 1.9 D GBWJYB ; GCWJYB 9884 ▸ | D | 1868 | DW8B | M | +/- | DN6, TSW | 12/03 ▸ | 1330N7 | **732892** 378 562,8 | ALB |
| 2.0 HDi GBRHYB ; GCRHYB | D | 1997 | DW10TD | M | +/- | DN6, TSW | 11/02 ▸ 05/08 | 1330F4 | **732892** 378 562,8 | ALB |
| 2.0 HDi GJRHYB | D | 1997 | DW10TD | M | | DN6, TSW | 11/02 ▸ 05/08 | 1330F4 | **732892** 378 562,8 | ALB |
| **PORSCHE** | | | | | | | | | | |
| **911 (996)** | | | | | | | | | | |
| 3.4 986 | E | 3387 | M96,01/,04 | A | | | 09/97 ▸ 09/01 | 99610613150 | **734826** 358 336 | ALB |
| 3.4 986 | E | 3600 | M96,01/,04 | A | | | 09/97 ▸ 09/01 | 99610613150 | **734826** 358 336 | ALB |
| 3.4 986 | E | 3387 | M96,01/,04 | A | | | 09/97 ▸ 09/01 | 99610613251 | **734827** 336 358 | ALB |
| 3.6 986 | E | 3596 | M96,03 | A | | | 10/01 ▸ 08/05 | 99610613251 | **734827** 336 358 | ALB |
| 3.6 GT3 986 | E | 3600 | M96,79 | A | | | 10/01 ▸ 08/05 | 99610613251 | **734827** 336 358 | ALB |
| **924** | | | | | | | | | | |
| 2.5 92N4 | E | 2479 | M44.08 | A | +/- | | 07/85 ▸ 07/87 | 94410602703 | 500 329 | ALB |
| **944 (81>84)** | | | | | | | | | | |
| 2.5 945012 | E | 2479 | M44.01 | A | +/- | | 06/81 ▸ 12/84 | 94410602703 | 500 329 | ALB |
| **944-2 (85>91)** | | | | | | | | | | |
| 2.5 945012 | E | 2479 | M44.07 | A | +/- | | 08/87 ▸ 07/88 | 94410602703 | 500 329 | ALB |
| **BOXSTER (96>2002)** | | | | | | | | | | |
| 2.5 i 24V 986 | E | 2480 | M96.20 | M | | | 08/96 ▸ 08/99 | 99610613251 | **734827** 336 358 | ALB |
| 2.5 i 24V 986 | E | 2480 | M96.20 | M | | | 08/96 ▸ 08/99 | 99610613151 | **734826** 358 336 | ALB |
| 2.5 i 24V 986 | E | 2480 | M96.20 | A | | | 08/96 ▸ 08/99 | 99610613150 | **734826** 358 336 | ALB |
| 2.5 i 24V 986 | E | 2480 | M96.20 | A | | | 08/96 ▸ 08/99 | 99610613251 | **734827** 336 358 | ALB |
| 2.7 i 24V 986 | E | 2687 | M96.22 | M | | | 08/99 ▸ 06/02 | 99610613151 | **734826** 358 336 | ALB |
| 2.7 i 24V 986 | E | 2687 | M96.22 | M | | | 08/99 ▸ 06/02 | 99610613251 | **734827** 336 358 | ALB |
| 2.7 i 24V 986 | E | 2687 | M96.22 | A | | | 08/99 ▸ 06/02 | 99610613151 | **734826** 358 336 | ALB |
| 2.7 i 24V 986 | E | 2687 | M96.22 | A | | | 08/99 ▸ 06/02 | 99610613251 | **734827** 336 358 | ALB |
| 3.2 i 24V 986 | E | 3179 | M96.21 | M | | | 08/99 ▸ 06/02 | 99610613151 | **734826** 358 336 | ALB |
| 3.2 i 24V 986 | E | 3179 | M96.21 | M | | | 08/99 ▸ 06/02 | 99610613251 | **734827** 336 358 | ALB |
| 3.2 i 24V 986 | E | 3179 | M96.21 | A | | | 08/99 ▸ 06/02 | 99610613151 | **734826** 358 336 | ALB |
| 3.2 i 24V 986 | E | 3179 | M96.21 | A | | | 08/99 ▸ 06/02 | 99610613251 | **734827** 336 358 | ALB |
| **CAYENNE (2003>2006)** | | | | | | | | | | |
| 3.2 i V6 24V 9P3LA0 ; 9P4LA2 | E | 3189 | M02.2Y | M | | TSW | 03/03 ▸ 12/05 | 95510614200 | **734741** 710 551 | ALB |
| 3.2 i V6 24V 9P3LA0 ; 9P4LA2 | E | 3189 | M02.2Y | A | | TSW | 03/03 ▸ 12/05 | 95510614200 | **734741** 710 551 | ALB |
| 4.5 i V8 32V 9P4LA6 ; 9P3LA4 | E | 4511 | M48.00 | M | | TSW | 03/03 ▸ 12/05 | 95510614200 | **734741** 710 551 | ALB |
| 4.5 i V8 32V 9P4LA9 ; 9P6LA8 | E | 4511 | M48.00,M48.50 | A | | TSW | 03/03 ▸ 12/05 | 95510614200 | **734741** 710 551 | ALB |
| 4.5 i V8 Turbo 32V 9P3LA4 ; 9P3LA8 9P4LA6 | | | | | | | | | | |
| **RENAULT** | | | | | | | | | | |
| **R4** | | | | | | | | | | |
| 1.1 GPL R112 ; R237 ; 210/B | G | 1108 | 688 | M | - | TSW 819744 | 09/75 ▸ 1992 | 7701348798 | **883463** 440 278 | ALM |
| 1.1 GPL R210 | G | 1108 | 688 | M | | TSW 819744 | 09/82 ▸ 1992 | 7701348798 | **883463** 440 278 | ALM |
| 0.7 R112 | E | 747 | 680 | M | - | | 07/61 ▸ 06/71 | 7701348916 | 252 358 | CBS |
| 0.8 R210 ; R239 ; R11/2 | E | 782 | 839 | M | - | | 07/71 ▸ 06/82 | 7701348916 | 252 358 | CBS |
| 0.8 R210 ; R239 ; R11/2 | E | 845 | 800,B1B | M | - | | 09/62 ▸ 06/86 | 7701348916 | 252 358 | CBS |
| 1.0 R112 | E | 956 | C1C | M | - | TSW 819744 | 07/86 ▸ 1990 | 7701348798 | **883463** 440 278 | ALM |
| 1.0 R112 | E | 956 | C1C | M | - | TSW 819744 | 07/86 ▸ 1992 | 7701348798 | **883463** 440 278 | ALM |

Radiator Radiateur Motorkühler Radiatore di raffreddamento Radiator Radyatör Radiador Радиатор vízhűtő Vodní chladič Radiator Ψυγείο



• **New** Nouveau **Nuevo** Novo **Nuovo** Nieuw **Neu** Nowość **Yeni** Новый Νέο **Novy**

# RENAULT (.../...)

| | Type Ctr. | | CC | | AC | | | OE | Valeo | DIM. | | TECH |
|---|---|---|---|---|---|---|---|---|---|---|---|---|
| **R4 (.../...)** | | | | | | | | | | | | |
| 1.1 | R112 ; R210 ; 3C2/3 ; R243 ; R23/7/9 | E | 1108 | 688,C1E | M | - | TSW 819744 | 07/75 ▸ 1992 | 7701348798 | **883463** | 440 | 278 ALM |
| 1.1 | R210 | E | 1108 | C1E | M | - | TSW 819744 | 09/82 ▸ 1992 | 7701348798 | **883463** | 440 | 278 ALM |
| **R5** | | | | | | | | | | | | |
| 0.8 | R122 | E | 782 | 839 | M | - | TSW 819744 | 01/72 ▸ 06/81 | 7701349387 | **883282** | 400 | 285 ALM |
| 0.8 | R122 | E | 782 | 839 | M | - | | 01/72 ▸ 06/81 | 7700647972 | | 410 | 247 CBS |
| 0.9 | R122 ; R238 ; 139/1 | E | 845 | 800 | M | - | | 07/72 ▸ 1981 | 7700647972 | | 410 | 247 CBS |
| 0.9 | R122 ; R238 ; 139/1 | E | 845 | 800 | M | - | TSW 819744 | 1982 ▸ 06/85 | 7701349387 | **883282** | 400 | 285 ALM |
| 1.0 | R122 ; R238 ; 139/2 | E | 956 | 689 | M | - | TSW 819744 | 01/72 ▸ 06/85 | 7701349387 | **883282** | 400 | 285 ALM |
| 1.1 | 1397 ; 2387 ; 122/7 | E | 1108 | 688,C1E | M | - | TSW 819744 | 07/79 ▸ 06/85 | 7701349387 | **883282** | 400 | 285 ALM |
| 1.3 | 1396 | E | 1289 | 810 | M | + | | 07/75 ▸ 06/85 | 6001001843 | | 560 | 278 CBS |
| 1.3 | R122 | E | 1289 | 810 | M | - | TSW | 07/73 ▸ 06/84 | 7700704654 | **810933** | 432 | 270 ALB |
| 1.3 | 1395 ; R122 | E | 1289 | 810 | M | - | TSW 819744 | 07/75 ▸ 06/85 | 7701349387 | **883282** | 400 | 285 ALM |
| 1.3 | 1399 ; R122 ; 122/9 | E | 1289 | 810 | M | - | TSW | 08/75 ▸ 06/85 | 7700712747 | **810933** | 432 | 270 ALB |
| 1.3 | 1229 ; 1399 | E | 1289 | 810 | M | - | | 08/79 ▸ 06/85 | 6001001843 | | 560 | 278 CBS |
| 1.3 | R122 | E | 1289 | 810 | M | | TSW | 07/75 ▸ 06/84 | 7700712747 | **810933** | 432 | 270 ALB |
| 1.3 | 1395 ; R122 | E | 1289 | 810 | A | - | TSW | 07/75 ▸ 06/85 | 7700704654 | **810933** | 432 | 270 ALB |
| 1.4 | 1229 ; 1399 | E | 1397 | C2J | M | - | TSW | 07/79 ▸ 06/85 | 7700704654 | **810933** | 432 | 270 ALB |
| 1.4,1.4 Turbo | 122/9/B | E | 1397 | 840,847,C6J | M | - | | 08/79 ▸ 06/85 | 6001001843 | | 560 | 278 CBS |
| 1.4 | 1229 | E | 1397 | 847 | M | - | TSW | 08/79 ▸ 06/85 | 7700712747 | **810933** | 432 | 270 ALB |
| 1.4 | 1229 ; 1399 | E | 1397 | 847 | A | - | TSW | 07/80 ▸ 06/85 | 7700704654 | **810933** | 432 | 270 ALB |
| **SUPER 5** | | | | | | | | | | | | |
| 0.9 | C400 ; S400 ; B40/0 | E | 956 | C1C | M | + | TSW | 07/84 ▸ 12/92 | 7700773968 | **883959** | 360 | 370 ALM |
| 0.9 | C400 ; S400 ; B40/0 | E | 956 | C1C | M | - | TSW | 06/84 ▸ 12/92 | 7700757930 | **883852** | 360 | 322 ALM |
| 0.9 | C400 ; S400 ; B40/0 | E | 956 | C1C | M | | TSW | 06/84 ▸ 12/92 | 7700757930 | **883852** | 360 | 322 ALM |
| 1.1 | C401 ; S401 ; B40/1 | E | 1108 | C1E | M | + | TSW | 07/84 ▸ 1996 | 7700773968 | **883959** | 360 | 370 ALM |
| 1.1 | B40/1/H ; S401 ; C40/1/H | E | 1108 | C1E | M | - | TSW | 06/84 ▸ | 7700757930 | **883852** | 360 | 322 ALM |
| 1.1 | B40H ; C40H | E | 1108 | C1E | M | - | TSW | 06/87 ▸ 08/90 | 7700773968 | **883959** | 360 | 370 ALM |
| 1.1 | B40/1/H ; S401 ; C40/1/H | E | 1108 | C1E | M | | TSW | 06/84 ▸ | 7700757930 | **883852** | 360 | 322 ALM |
| 1.2 | B40F ; C40F | E | 1237 | C1G | M | +/- | TSW | 06/86 ▸ 08/90 | 7700773968 | **883959** | 360 | 370 ALM |
| 1.2 | C40F ; S40F ; B40/F | E | 1237 | C1G | M | - | TSW | 06/86 ▸ 08/90 | 7700757930 | **883852** | 360 | 322 ALM |
| 1.2 | C40F ; S40F ; B40/F | E | 1237 | C1G | M | | TSW | 06/86 ▸ 08/90 | 7700757930 | **883852** | 360 | 322 ALM |
| 1.4 i | C407 ; S407 ; B40/7 | E | 1390 | C3J | M | - | TSW | 07/86 ▸ 12/96 | 7700773968 | **883959** | 360 | 370 ALM |
| 1.4 i | C407 ; S407 ; B40/7 | E | 1390 | C3J | M | - | TSW | 07/86 ▸ | 7700757930 | **883852** | 360 | 322 ALM |
| 1.4 i | C407 ; S407 ; B40/7 | E | 1390 | C3J | M | | TSW | 07/86 ▸ | 7700757930 | **883852** | 360 | 322 ALM |
| 1.4,1.4 Turbo | B40/2/3/J ; C40/2/3 5/J | E | 1397 | C1J,C2J,C3J | M | + | TSW | 07/84 ▸ 08/90 | 7700773968 | **883959** | 360 | 370 ALM |
| 1.4,1.4 i | B40/3/7/M ; C40/3/7 M | E | 1397 | C2J,C3J | M | - | TSW | 07/84 ▸ 08/90 | 7700773968 | **883959** | 360 | 370 ALM |
| 1.4,1.4 Turbo,1.4 i | B40/2/3/7/J/M ; C40 2/3/5/7/J/M | E | 1397 | C1J,C2J,C3J | M | - | TSW | 07/84 ▸ 08/90 | 7700757930 | **883852** | 360 | 322 ALM |
| 1.4 Turbo | C405 | E | 1397 | C1J | M | | TSW | 07/84 ▸ 08/90 | 6001009077 | **810926** | 308 | 397,5 ALB |
| 1.4,1.4 Turbo,1.4 i | B40/2/3/7/J/M ; C40 2/3/5/7/J/M | E | 1397 | C1J,C2J,C3J | M | | TSW | 07/84 ▸ 08/90 | 7700757930 | **883852** | 360 | 322 ALM |
| 1.4 | B40/3/J ; C40/3/J | E | 1397 | C2J | A | | TSW | 07/84 ▸ 08/90 | 7700773968 | **883959** | 360 | 370 ALM |
| 1.7 | B40/8 ; C40/8/9 | E | 1721 | F3N | M | +/- | TSW | 06/86 ▸ 08/90 | 7700773700 | **810851** | 390 | 397,5 ALB |
| 1.7 | B40/G/K ; C40/G/K | E | 1721 | F2N | M | +/- | TSW | 06/87 ▸ 08/90 | 7700773968 | **883959** | 360 | 370 ALM |
| 1.7 | B408 ; C408 | E | 1721 | F3N | M | - | TSW | 06/86 ▸ 08/90 | 7700773968 | **883959** | 360 | 370 ALM |
| 1.7 | B408 ; C408 | E | 1721 | F3N | A | +/- | TSW | 06/86 ▸ 08/90 | 7700773700 | **810851** | 390 | 397,5 ALB |
| 1.6 D | C404 ; S404 ; B40/4 | D | 1595 | F8M | M | +/- | TSW | 06/85 ▸ 12/92 | 7700773700 | **810851** | 390 | 397,5 ALB |
| **R9** | | | | | | | | | | | | |
| 1.1 | L421 | E | 1108 | C1E | M | + | | 10/86 ▸ 05/87 | 7700763166 | | 440 | 390 CBS |
| 1.1 | L421 | E | 1108 | C1E | M | - | TSW | 10/81 ▸ 10/86 | 7700725010 | **883729** | 360 | 396 ALM |
| 1.1 | L421 | E | 1108 | C1E | M | - | | 10/81 ▸ 09/86 | 7700765601 | | 348 | 403 ALB |
| 1.1 | L421 | E | 1108 | C1E | M | - | TSW | 10/86 ▸ 05/87 | 7702146438 | **883959** | 360 | 370 ALM |
| 1.2 | L42S | E | 1237 | C1G | M | + | | 10/86 ▸ 09/88 | 7700763166 | | 440 | 390 CBS |
| 1.2 | L42S | E | 1237 | C1G | M | - | | 07/85 ▸ 09/86 | 7700765601 | | 348 | 403 ALB |
| 1.2 | L42S | E | 1237 | C1G | M | - | TSW | 10/86 ▸ 09/88 | 7700773968 | **883959** | 360 | 370 ALM |
| 1.4,1.4 Turbo | L42/2/3/5/A/C/J/R | E | 1397 | C1J,C2J,C3J | M | + | | 10/81 ▸ 09/88 | 7700763166 | | 440 | 390 CBS |
| 1.4,1.4 Turbo | L42/3/5 | E | 1397 | C1J,C2J | M | + | | 08/83 ▸ 09/86 | 7700759200 | | 428 | 397,5 ALB |
| 1.4 | L42/2/3/A | E | 1397 | C1J,C2J,C3J | M | - | | 10/81 ▸ 12/88 | 7700765601 | | 348 | 403 ALB |
| 1.4,1.4 Turbo | L42/3/5 | E | 1397 | C1J,C2J | M | - | | 08/83 ▸ 09/86 | 7700759197 | | 360 | 403 ALB |
| 1.4 Turbo | L425 | E | 1397 | C1J | M | - | | 10/86 ▸ 09/88 | 7700775262 | | 360 | 397,5 ALB |
| 1.4 | L423 | E | 1397 | C2J | A | + | | 10/81 ▸ 1988 | 7700759200 | | 428 | 397,5 ALB |
| 1.4 | L423 | E | 1397 | C2J | A | + | | 10/81 ▸ 1988 | 7700763166 | | 440 | 390 CBS |
| 1.4 | L423 | E | 1397 | C2J | A | - | | 10/81 ▸ 09/86 | 7700765601 | | 348 | 403 ALB |
| 1.4 | L423 | E | 1397 | C2J | A | - | | 10/81 ▸ 1988 | 7700759197 | | 360 | 403 ALB |
| 1.4 | L423 | E | 1397 | C2J | A | - | TSW | 09/86 ▸ 1988 | 7700773968 | **883959** | 360 | 370 ALM |

# RENAULT (.../...)

## R9 (.../...)

| Type Ctr. | CC | | | AC | | 2+3 | OE | Valeo | DIM. | TECH |
|---|---|---|---|---|---|---|---|---|---|---|
| 1.7 L42/6/D/E/F/L | E | 1721 | F2N,F3N | M | + | | 09/83 ▸ 1988 | 7700763166 | | 440 390 | CBS |
| 1.7 L42/6/F | E | 1721 | F2N,F3N | M | - | | 09/83 ▸ 09/86 | 7700765601 | | 348 403 | ALB |
| 1.7 L42/6/D/F/L/N | E | 1721 | F2N,F3N | M | - | TSW | 10/86 ▸ 12/88 | 7700773968 | 883959 | 360 370 | ALM |
| 1.7 L42E | E | 1721 | F3N | M | - | TSW | 10/86 ▸ 12/88 | 7700773700 | 810851 | 390 397,5 | ALB |
| 1.7 L426 | E | 1721 | F2N | A | + | | 09/87 ▸ 1988 | 7700763166 | | 440 390 | CBS |
| 1.7 L426 | E | 1721 | F2N | A | + | | 09/87 ▸ 12/88 | 7700759200 | | 428 397,5 | ALB |
| 1.7 L426 | E | 1721 | F2N | A | - | TSW | 09/87 ▸ 12/88 | 7700773968 | 883959 | 360 370 | ALM |
| 1.7 L426 | E | 1721 | F2N | A | | | 09/87 ▸ 12/88 | 7700765601 | | 348 403 | ALB |
| 1.6 D L424 | D | 1595 | F8M | M | + | | 10/82 ▸ 1988 | 7700763166 | | 440 390 | CBS |
| 1.6 D L424 | D | 1595 | F8M | M | - | TSW | > ▸ 12/88 | 7700773700 | 810851 | 390 397,5 | ALB |
| D027617 ▸ | | | | | | | | | | | |
| 1.6 D L424 | D | 1595 | F8M | M | - | | 10/82 ▸ | 7700765602 | | 398 403 | ALB |

## R11

| | | | | | | | | | | | |
|---|---|---|---|---|---|---|---|---|---|---|---|
| 1.4 GPL B373 | G | 1397 | C2J | M | + | | 07/84 ▸ 07/87 | 7700763166 | | 440 390 | CBS |
| 1.4 GPL B373 | G | 1397 | C2J | M | - | | 07/84 ▸ 09/86 | 7700765601 | | 348 403 | ALB |
| 1.4 GPL B373 | G | 1397 | C2J | M | - | TSW | 07/84 ▸ 07/87 | 7700725010 | 883729 | 360 396 | ALM |
| 1.4 GPL B373 | G | 1397 | C2J | M | - | TSW | 10/86 ▸ 07/87 | 7700773968 | 883959 | 360 370 | ALM |
| 1.7 GPL B376 | G | 1721 | F2N | M | + | | 07/83 ▸ 07/89 | 7700763166 | | 440 390 | CBS |
| 1.7 GPL B376 | G | 1721 | F2N | M | - | TSW | 07/83 ▸ 07/89 | 7700725010 | 883729 | 360 396 | ALM |
| 1.7 GPL B376 | G | 1721 | F2N | M | - | | 07/83 ▸ 09/86 | 7700765601 | | 348 403 | ALB |
| 1.7 GPL B376 | G | 1721 | F2N | M | - | TSW | 10/86 ▸ 07/89 | 7700773968 | 883959 | 360 370 | ALM |
| 1.1 C371 ; S371 ; B37/1 | E | 1108 | C1E | M | - | | 07/82 ▸ 09/86 | 7700765601 | | 348 403 | ALB |
| 1.1 C371 ; S371 ; B37/1 | E | 1108 | C1E | M | - | TSW | 07/82 ▸ 10/86 | 7700725010 | 883729 | 360 396 | ALM |
| 1.1 B371 | E | 1108 | C1E | M | - | TSW | 10/86 ▸ 05/87 | 7700773968 | 883959 | 360 370 | ALM |
| 1.1 B371 | E | 1108 | C1E | M | | TSW | 07/82 ▸ 07/84 | 7700759195 | 883729 | 360 396 | ALM |
| 1.1 B371 | E | 1108 | C1E | M | | TSW | 09/86 ▸ 05/87 | 7702146438 | 883959 | 360 370 | ALM |
| 1.2 C37S ; S37S ; B37/S | E | 1237 | C1G | M | - | TSW | 07/84 ▸ 10/86 | 7700725010 | 883729 | 360 396 | ALM |
| 1.2 C37S ; S37S ; B37/S | E | 1237 | C1G | M | - | | 07/84 ▸ 09/86 | 7700765601 | | 348 403 | ALB |
| 1.2 B37S | E | 1237 | C1G | M | - | TSW | 10/86 ▸ 07/89 | 7700773968 | 883959 | 360 370 | ALM |
| 1.2 C37S ; S37S ; B37/S | E | 1237 | C1G | M | | TSW | 09/86 ▸ 07/89 | 7702146438 | 883959 | 360 370 | ALM |
| 1.2 C37S | E | 1237 | C1G | M | | TSW | 10/86 ▸ 07/89 | 7702159882 | 883959 | 360 370 | ALM |
| 1.2 C37S ; S37S | E | 1237 | C1G | M | | TSW | 10/86 ▸ 07/89 | 7700773968 | 883959 | 360 370 | ALM |
| 1.4,1.4 Turbo C375 ; B37/2/3/5 | E | 1397 | C1J,C2J | M | + | | 07/82 ▸ 07/89 | 7700763166 | | 440 390 | CBS |
| 1.4,1.4 i B37/2/3/A/C/R/S C37/2/3/A/C/R ; S37/2/3 | E | 1397 | C1J,C2J,C3J | M | - | TSW | 07/82 ▸ 07/89 | 7700725010 | 883729 | 360 396 | ALM |
| 1.4,1.4 i B37/2/3/R/S ; C37/2 3/A/R ; S37/2/3 | E | 1397 | C1J,C2J,C3J | M | - | | 07/82 ▸ 07/89 | 7700765601 | | 348 403 | ALB |
| 1.4 Turbo B375 ; C375 | E | 1397 | C1J | M | - | | 09/83 ▸ 09/86 | 7700759197 | | 360 403 | ALB |
| 1.4 Turbo B375 ; C375 | E | 1397 | C1J | M | - | | 10/86 ▸ 07/89 | 7700775262 | | 360 397,5 | ALB |
| 1.4,1.4 i B37/2/3/A/C/S ; C37 3/A/C | E | 1397 | C1J,C2J,C3J | M | - | TSW | 10/86 ▸ 07/89 | 7700773968 | 883959 | 360 370 | ALM |
| 1.4,1.4 Turbo,1.4 i B37/2/3/5/A/C/R/S C37/3/5/A/C/R | E | 1397 | C1J,C2J,C3J | M | | TSW | 09/86 ▸ 07/89 | 7702146438 | 883959 | 360 370 | ALM |
| 1.4 B373 ; C373 | E | 1397 | C2J | A | + | | 07/82 ▸ 07/89 | 7700759200 | | 428 397,5 | ALB |
| 1.4 B373 | E | 1397 | C2J | A | + | | 07/83 ▸ 07/89 | 7700763166 | | 440 390 | CBS |
| 1.4 B373 ; C373 | E | 1397 | C2J | A | - | | 07/82 ▸ 07/89 | 7700765601 | | 348 403 | ALB |
| 1.4 B373 ; C373 | E | 1397 | C2J | A | - | TSW | 07/82 ▸ 10/86 | 7700725010 | 883729 | 360 396 | ALM |
| 1.4 B373 ; C373 | E | 1397 | C2J | A | - | | 07/82 ▸ 10/86 | 7700759197 | | 360 403 | ALB |
| 1.4 B373 | E | 1397 | C2J | A | - | TSW | 10/86 ▸ 07/89 | 7700773968 | 883959 | 360 370 | ALM |
| 1.4 B373 ; C373 | E | 1397 | C2J | A | | TSW | 09/86 ▸ 07/89 | 7702146438 | 883959 | 360 370 | ALM |
| 1.7 B376 | E | 1721 | F2N | M | + | | 07/83 ▸ 06/87 | 7700763166 | | 440 390 | CBS |
| 1.7,1.7 i B37/6/F ; C37/6/F | E | 1721 | F2N,F3N | M | - | | 07/83 ▸ 07/89 | 7700765601 | | 348 403 | ALB |
| 1.7,1.7 i B37/6/D/F/L/N ; C37 6/D/F/L/N | E | 1721 | F2N,F3N | M | - | TSW | 07/83 ▸ 07/89 | 7700725010 | 883729 | 360 396 | ALM |
| 1.7,1.7 i B37/6/D/F/L/N ; C37 6/D/F/L/N | E | 1721 | F2N,F3N | M | - | TSW | 10/86 ▸ 07/89 | 7700773968 | 883959 | 360 370 | ALM |
| 1.7 i B37E ; C37E | E | 1721 | F3N | M | - | TSW | 10/86 ▸ 07/89 | 7700773700 | 810851 | 390 397,5 | ALB |
| 1.7,1.7 i B37/6/D/E/F/L/N C37/6/D/E/F/L/N | E | 1721 | F2N,F3N | M | | TSW | 09/86 ▸ 07/89 | 7702146438 | 883959 | 360 370 | ALM |
| 1.7 B376 | E | 1721 | F2N | A | + | | 06/87 ▸ 07/89 | 7700759200 | | 428 397,5 | ALB |
| 1.7 B376 | E | 1721 | F2N | A | - | | 06/87 ▸ 07/89 | 7700765601 | | 348 403 | ALB |
| 1.7 B376 | E | 1721 | F2N | A | - | TSW | 06/87 ▸ 07/89 | 7700725010 | 883729 | 360 396 | ALM |
| 1.7 B376 | E | 1721 | F2N | A | - | TSW | 06/87 ▸ 07/89 | 7700773968 | 883959 | 360 370 | ALM |
| 1.7 B376 | E | 1721 | F2N | A | | TSW | 06/87 ▸ 07/89 | 7702146438 | 883959 | 360 370 | ALM |
| 1.6 D B374 | D | 1595 | F8M | M | + | | 07/83 ▸ 07/89 | 7700763166 | | 440 390 | CBS |
| 1.6 D C374 ; S374 ; B37/4 | D | 1595 | F8M | M | - | TSW | > ▸ 07/89 | 7700773700 | 810851 | 390 397,5 | ALB |
| D027740, E037058 ▸ | | | | | | | | | | | |

Radiator Radiateur Motorkühler Radiatore di raffreddamento Radiator Radyatör Radiator Радиатор Radiador Vodní chladič vízhűtő Ψυγείο Radiator



• **New** Nouveau **Nuevo** Novo **Nuovo** Nieuw **Neu** Nowość **Yeni** Новый Νέο **Nový**

| Type Ctr. | | CC | | AC | | | OE | Valeo | DIM. | TECH |
|---|---|---|---|---|---|---|---|---|---|---|
| **RENAULT (.../...)** | | | | | | | | | | |
| **R11 (.../...)** | | | | | | | | | | |
| 1.6 D B374 | D | 1595 | F8M | M | | TSW | > ▸ 07/89 | 7700773700 | **810851** | 390 397,5 | ALB |
| H016936, U002928 ▸ | | | | | | | | | | |
| 1.6 D C374 ; S374 ; B37/4 | D | 1595 | F8M | M | - | | 07/83 ▸ | 7700765602 | | 398 403 | ALB |
| **R18** | | | | | | | | | | |
| 1.4 1349 | E | 1397 | 847 | M | +/- | TSW | 07/79 ▸ 1982 | 7700696425 | **810843** | 480 307 | ALB |
| 1.4 1340 ; 1350 | E | 1397 | 847 | M | + | | 09/77 ▸ 1986 | 7701349436 | | 540 300 | CBS |
| 1.4 134/0 ; 2350 ; 135/0/9 | E | 1397 | 847 | M | - | TSW | 09/77 ▸ 1986 | 7700657109 | **810843** | 480 307 | ALB |
| 1.4 1340 | E | 1397 | 847 | M | | TSW | 09/77 ▸ 1986 | 7700696425 | **810843** | 480 307 | ALB |
| 1.4 1340 | E | 1397 | 847 | A | + | | 03/79 ▸ 1986 | 7701349436 | | 540 300 | CBS |
| 1.4 1340 | E | 1397 | 847 | A | - | TSW | 03/79 ▸ 1986 | 7700657109 | **810843** | 480 307 | ALB |
| 1.6 Turbo,1.6 i Turbo 134/5/A ; 135/5/A | E | 1565 | A5L,A7L | M | +/- | | 09/80 ▸ 1986 | 7701349543 | | 420 326 | CBS |
| 1.6 134/1/2 ; 135/1/2 | E | 1647 | 841,A2M,A6M | M | + | | 04/78 ▸ 1986 | 7701349436 | | 540 300 | CBS |
| 1.6,1.6 i 134/1/2 ; 135/1/2/8 | E | 1647 | 841,843,A2M,A6M | M | - | TSW | 04/78 ▸ 1986 | 7700657109 | **810843** | 480 307 | ALB |
| 1.6 1341 ; 1351 | E | 1647 | 841,A2M | M | - | | 04/78 ▸ 1986 | 7701349436 | | 540 300 | CBS |
| 1.6 134/2 ; 135/1/2 | E | 1647 | 841,A6M | A | + | | 07/79 ▸ 1986 | 7701349436 | | 540 300 | CBS |
| 1.6,1.6 i 134/1/2 ; 135/1/2/8 | E | 1647 | 841,843,A6M | A | - | TSW | 07/79 ▸ 1986 | 7700657109 | **810843** | 480 307 | ALB |
| 1.6 1341 | E | 1647 | 841 | A | - | | 06/82 ▸ 1986 | 7701349436 | | 540 300 | CBS |
| 2.0 1343 ; 1353 | E | 1995 | J6R | M | + | TSW | 09/81 ▸ 1986 | 7700736827 | **810835** | 640 328 | ALB |
| 2.0 1343 | E | 1995 | J6R | M | - | TSW | 09/81 ▸ 1986 | 7700736827 | **810835** | 640 328 | ALB |
| 2.0 1343 ; 1353 | E | 1995 | J6R | M | - | | 09/81 ▸ 1986 | 7701349631 | | 420 326 | CBS |
| 2.0 1353 | E | 1995 | J6R | A | + | TSW | 09/81 ▸ 1986 | 7700736827 | **810835** | 640 328 | ALB |
| 2.0 1343 | E | 1995 | J6R | A | - | TSW | 09/81 ▸ 10/86 | 7700736827 | **810835** | 640 328 | ALB |
| 2.0 1343 ; 1353 | E | 1995 | J6R | A | - | | 09/81 ▸ 10/86 | 7701349631 | | 420 326 | CBS |
| 2.2 Turbo 135B | E | 2165 | J7T | M | +/- | | 07/83 ▸ 06/86 | 7700759067 | | 480 307 | CBS |
| 2.2 Turbo 135B | E | 2165 | J7T | A | +/- | | 07/83 ▸ 1986 | 7700759066 | | 480 307 | CBS |
| 2.1 D,2.1 TD Turbo 134/4/6 ; 2354 ; 135 4/6 | D | 2068 | 852,J8S | M | +/- | TSW | 09/80 ▸ 1986 | 7700736827 | **810835** | 640 328 | ALB |
| 2.1 D 1344 ; 1354 | D | 2068 | J8S | A | +/- | | 09/80 ▸ 1986 | 7700725261 | | 640 326 | CBS |
| **R19** | | | | | | | | | | |
| 1.2 e C53W ; L53W ; B53/W | E | 1171 | E7F | M | - | TSW | 05/92 ▸ 10/95 | 7701047886 | **816658** | 430 377,5 | ALM |
| 1.2 L530 | E | 1237 | C1G | M | +/- | TSW | 04/89 ▸ 04/92 | 7700805486 | **816655** | 390 377,5 | ALM |
| 1.2 C530 ; L530 ; S530 ; B53/0 | E | 1237 | C1G | M | - | TSW | 07/88 ▸ 10/95 | 7700805486 | **816655** | 390 377,5 | ALM |
| 1.2 C530 | E | 1237 | C1G | M | - | TSW 819745 | 07/88 ▸ 04/92 | 7700810264 | **730055** | 430 377,5 | ALM |
| 1.2 L530 | E | 1237 | C1G | M | - | TSW | 05/92 ▸ | 7700784037 | **816655** | 390 377,5 | ALM |
| 1.2 B530 ; C530 | E | 1237 | C1G | M | - | TSW 819745 | 05/92 ▸ 10/95 | 7701047887 | **730055** | 430 377,5 | ALM |
| 1.2 B530 ; S530 | E | 1237 | C1G | M | | TSW | 07/88 ▸ 04/92 | 7700805486 | **816655** | 390 377,5 | ALM |
| 1.2 C530 ; L530 ; S530 ; B53/0 | E | 1237 | C1G | M | | TSW 819745 | 07/88 ▸ 04/92 | 7701047887 | **730055** | 430 377,5 | ALM |
| 1.2 B530 ; L530 | E | 1237 | C1G | M | | TSW 819745 | 07/88 ▸ 04/92 | 7700810264 | **730055** | 430 377,5 | ALM |
| 1.4,1.4 GPL,1.4 e,1.4 i B53/5/7/A ; C53/5/7 A ; L53/5/7/A | E | 1390 | E6J,E7J | M | + | TSW | 07/88 ▸ 11/95 | 7700784039 | **810912** | 430 397 | ALB |
| 1.4 i B532 | E | 1390 | C3J | M | + | TSW 819745 | 07/88 ▸ 04/92 | 7701047887 | **730055** | 430 377,5 | ALM |
| 1.4 i C532 | E | 1390 | C3J | M | - | TSW 819745 | 07/88 ▸ 04/92 | 7700810264 | **730055** | 430 377,5 | ALM |
| 1.4,1.4 GPL,1.4 e,1.4 i B53/5/7/A ; C53/5/7 A ; S537 ; L53/5/7/A | E | 1390 | E6J,E7J | M | - | TSW | 07/88 ▸ 11/95 | 7700784040 | **816657** | 390 377,5 | ALM |
| 1.4 i L53A | E | 1390 | E7J | M | - | TSW 819745 | 04/91 ▸ 04/92 | 7701047889 | **730551** | 570 378 | ALM |
| 1.4 L537 ; S537 | E | 1390 | E6J | M | | TSW | 07/88 ▸ 04/92 | 7700784040 | **816657** | 390 377,5 | ALM |
| 1.4 L532 ; S532 | E | 1390 | C3J | M | | TSW 819745 | 07/88 ▸ 04/92 | 7700810264 | **730055** | 430 377,5 | ALM |
| 1.4,1.4 i L532 ; S532 ; C53/2 | E | 1390 | C3J | M | | TSW 819745 | 07/88 ▸ 04/92 | 7701047887 | **730055** | 430 377,5 | ALM |
| 1.4 i L53A | E | 1390 | E7J | M | | TSW 819745 | 04/91 ▸ 04/92 | 7700816323 | **730551** | 570 378 | ALM |
| 1.4 C537 ; L537 ; B53/7 | E | 1390 | E6J | A | +/- | TSW | 07/88 ▸ 08/95 | 7701047886 | **816658** | 430 377,5 | ALM |
| 1.4 i B53A ; C53A | E | 1390 | E7J | A | + | TSW | 05/92 ▸ 11/95 | 7700784039 | **810912** | 430 397 | ALB |
| 1.4 B537 ; C537 | E | 1390 | E6J | A | - | TSW | 07/88 ▸ 10/95 | 7701047886 | **816658** | 430 377,5 | ALM |
| 1.4 e,1.4 i C53A ; L53A ; B53/A | E | 1390 | E7J | A | - | TSW 819745 | 05/92 ▸ 11/95 | 7700816323 | **730551** | 570 378 | ALM |
| 1.4 L537 | E | 1390 | E6J | A | | TSW | 04/89 ▸ 04/92 | 7701047886 | **816658** | 430 377,5 | ALM |
| 1.4 B53H | E | 1397 | C2J | M | + | | 07/88 ▸ 04/92 | 7700793250 | | 430 360 | CBS |
| 1.4 B53/1/P ; L531 ; C53/1/P | E | 1397 | C1J,C2J | M | - | TSW | 07/88 ▸ 10/95 | 7700805486 | **816655** | 390 377,5 | ALM |
| 1.4 e C532 ; L532 ; B53/2 | E | 1397 | C3J | M | - | TSW 819745 | 05/92 ▸ 08/95 | 7700810264 | **730055** | 430 377,5 | ALM |
| 1.4 L531 | E | 1397 | C1J | M | - | TSW | 05/92 ▸ | 7700784037 | **816655** | 390 377,5 | ALM |
| 1.4 L53/1/P | E | 1397 | C1J,C2J | M | | TSW | 04/89 ▸ 04/92 | 7700805486 | **816655** | 390 377,5 | ALM |
| 1.4 L53H | E | 1397 | C2J | M | | | 04/89 ▸ 04/92 | 7700793250 | | 430 360 | CBS |
| 1.4 L531 | E | 1397 | C1J | M | | TSW 819745 | 04/89 ▸ 12/91 | 7700810264 | **730055** | 430 377,5 | ALM |
| ▸ 911210 | | | | | | | | | | |
| 1.7,1.7 i B53B ; L533 | E | 1721 | F2N,F3N | M | +/- | TSW | 04/89 ▸ 08/95 | 7700811808 | **730510** | 430 398 | ALB |
| 1.7 B533 | E | 1721 | F2N | M | +/- | TSW | 05/92 ▸ 08/95 | 7700784036 | **730510** | 430 398 | ALB |
| 1.7 i B53/C/F | E | 1721 | F3N | M | + | TSW | 07/88 ▸ 04/92 | 7700790964 | **730180** | 480 396,7 | ALB |
| 1.7,1.7 i B53/C ; D53C ; C53/C F ; L53/C/F | E | 1721 | F3N | M | + | TSW | 07/88 ▸ 11/95 | 7700272527 | **730511** | 480 400 | CBS |
| 1.7 B536 | E | 1721 | F2N | M | + | | 07/88 ▸ 04/92 | 7700793250 | | 430 360 | CBS |

# RENAULT (.../...)

## R19 (.../...)

| | | | CC | | | AC | | | OE | Valeo | DIM. | | TECH |
|---|---|---|---|---|---|---|---|---|---|---|---|---|---|
| 1.7,1.7 i | C533 ; B53/C/F | E | 1721 | F2N,F3N | M | + | TSW | 07/88 ▸ 11/95 | 7700811808 | **730510** | 430 | 398 | ALB |
| 1.7,1.7 i | B53/3/B/C/E/F/M C53/B/C/E/F/M ; L53/C/F | E | 1721 | F2N,F3N | M | - | TSW | 07/88 ▸ 11/95 | 7700811808 | **730510** | 430 | 398 | ALB |
| 1.7 | C533 ; L533 | E | 1721 | F2N | M | - | TSW | 05/92 ▸ 08/95 | 7700784036 | **730510** | 430 | 398 | ALB |
| 1.7 i | C53B ; L53B ; B53/B | E | 1721 | F3N | M | - | TSW 819745 | 05/92 ▸ 08/95 | 7701047889 | **730551** | 570 | 378 | ALM |
| 1.7 i | C53B ; L53B | E | 1721 | F3N | M | - | TSW 819745 | 05/92 ▸ 08/95 | 7700816323 | **730551** | 570 | 378 | ALM |
| 1.7 | C533 ; D53C ; B53/3 ; L53/3/6/B/C/F | E | 1721 | F2N,F3N | M | | TSW | 04/89 ▸ 08/95 | 7700811808 | **730510** | 430 | 398 | ALB |
| 1.7 | L536 | E | 1721 | F2N | M | | | 06/89 ▸ 08/90 | 7700793250 | | 430 | 360 | CBS |
| 1.7 i | B53B | E | 1721 | F3N | M | | TSW 819745 | 05/92 ▸ 08/95 | 7700816323 | **730551** | 570 | 378 | ALM |
| 1.7 i | B53B | E | 1721 | F3N | A | +/- | TSW | 05/92 ▸ 08/95 | 7700811808 | **730510** | 430 | 398 | ALB |
| 1.7,1.7 i | B53/3/C | E | 1721 | F2N,F3N | A | + | TSW | 07/88 ▸ 04/92 | 7700790964 | **730180** | 480 | 396,7 | ALB |
| 1.7,1.7 i | B53/3 ; D53C ; C53/3 B/C ; L53/3/C | E | 1721 | F2N,F3N | A | + | TSW | 04/89 ▸ 11/95 | 7700272527 | **730511** | 480 | 400 | CBS |
| 1.7 i | B53C | E | 1721 | F3N | A | + | TSW | 05/92 ▸ 11/95 | 7700811808 | **730510** | 430 | 398 | ALB |
| 1.7,1.7 i | B53/3/B/C ; D53C L53C ; C53/B/C | E | 1721 | F2N,F3N | A | - | TSW | 07/88 ▸ 11/95 | 7700811808 | **730510** | 430 | 398 | ALB |
| 1.7 i | C53B ; L53B ; B53/B | E | 1721 | F3N | A | - | TSW 819745 | 05/92 ▸ 08/95 | 7701047889 | **730551** | 570 | 378 | ALM |
| 1.7 i | L53B | E | 1721 | F3N | A | - | TSW 819745 | 05/92 ▸ 08/95 | 7700816323 | **730551** | 570 | 378 | ALM |
| 1.7 | C533 | E | 1721 | F2N | A | - | TSW 819745 | 05/92 ▸ 08/95 | 7701047887 | **730055** | 430 | 377,5 | ALM |
| 1.7 | B533 ; C533 | E | 1721 | F2N | A | - | TSW | 05/92 ▸ 08/95 | 7700784036 | **730510** | 430 | 398 | ALB |
| 1.7 | C533 ; D53C ; B53/3 ; L53/3/B | E | 1721 | F2N,F3N | A | | TSW | 04/89 ▸ 08/95 | 7700811808 | **730510** | 430 | 398 | ALB |
| 1.7 | C533 ; L533 ; B53/3 | E | 1721 | F2N | A | | TSW | 04/89 ▸ 08/95 | 7700790964 | **730180** | 480 | 396,7 | ALB |
| 1.7 i | B53B ; C53B | E | 1721 | F3N | A | | TSW 819745 | 05/92 ▸ 08/95 | 7700816323 | **730551** | 570 | 378 | ALM |
| 1.8 16V,1.8 i 16V | C53D ; D53D ; L53D B53/D | E | 1763 | F7P | M | + | TSW | 04/89 ▸ 10/95 | 6001025340 | **730973** | 585 | 396 | ALB |
| 1.8 i 16V | B53/9/D ; D53D L53D ; C53/9/D | E | 1763 | F7P | M | - | | 07/88 ▸ 10/95 | 7700784041 | | 430 | 397 | ALB |
| 1.8 16V,1.8 i 16V | D53/D ; L53/9/D | E | 1763 | F7P | M | | | 04/89 ▸ 04/92 | 7700784041 | | 430 | 397 | ALB |
| 1.8 i | 453/A/C/D/H ; 553/A/C/D/H ; 853/A/C ; B53/8 Y ; D53Y ; C53/8/Y ; L53/8/Y | E | 1794 | F3P | M | +/- | TSW | 05/92 ▸ 11/95 | 7700272527 | **730511** | 480 | 400 | CBS |
| 1.8 i | 353/A/C/D | E | 1794 | F3P | M | + | TSW 819745 | 04/93 ▸ 08/95 | 7700816323 | **730551** | 570 | 378 | ALM |
| 1.8 i | 453/A/C/D/H ; 553/A/C/D/H ; 853/A/C ; B53/8 Y ; D53Y ; C53/8/Y ; L53/8/Y | E | 1794 | F3P | M | - | TSW 819745 | 05/92 ▸ 11/95 | 7701047889 | **730551** | 570 | 378 | ALM |
| 1.8 i | 453/A/C/D/H ; 553/A/C/D/H ; B53/8/Y ; C53/8 Y ; L53/8/Y | E | 1794 | F3P | M | - | TSW 819745 | 05/92 ▸ 11/95 | 7700816323 | **730551** | 570 | 378 | ALM |
| 1.8 i | D53Y ; 853/A/C | E | 1794 | F3P | M | | TSW 819745 | 05/92 ▸ 08/95 | 7700816323 | **730551** | 570 | 378 | ALM |
| 1.8 i | B53/8/Y ; D53Y ; C53/8/Y ; L53/8/Y | E | 1794 | F3P | M | | TSW | 05/92 ▸ 11/95 | 7700790964 | **730180** | 480 | 396,7 | ALB |
| 1.8 i | 453/F/H ; 853F ; 553/F/H ; C53Y ; D53Y ; B53 V/Y ; L53/V/Y | E | 1794 | F3P | A | +/- | TSW | 05/92 ▸ 11/95 | 7700272527 | **730511** | 480 | 400 | CBS |
| 1.8 i | 353F ; C53V | E | 1794 | F3P | A | + | TSW 819745 | 09/94 ▸ 11/95 | 7701047889 | **730551** | 570 | 378 | ALM |
| 1.8 i | 453/F/H ; B53Y ; C53Y ; 553/F/H ; L53/V/Y | E | 1794 | F3P | A | - | TSW 819745 | 05/92 ▸ 11/95 | 7700816323 | **730551** | 570 | 378 | ALM |
| 1.8 i | 453/F/H ; 853F ; B53Y ; C53Y ; D53Y ; 553/F H ; L53/V/Y | E | 1794 | F3P | A | - | TSW 819745 | 05/92 ▸ 11/95 | 7701047889 | **730551** | 570 | 378 | ALM |
| 1.8 i | 853F ; D53Y | E | 1794 | F3P | A | | TSW 819745 | 05/92 ▸ 11/95 | 7700816323 | **730551** | 570 | 378 | ALM |
| 1.8 i | C53Y ; D53Y ; L53Y ; B53/Y | E | 1794 | F3P | A | | TSW | 05/92 ▸ 11/95 | 7700790964 | **730180** | 480 | 396,7 | ALB |
| 1.8 i | B53V | E | 1794 | F3P | A | | TSW 819745 | 09/94 ▸ 10/95 | 7701047889 | **730551** | 570 | 378 | ALM |
| 1.9 D | B53/4/J ; C53/4/J ; L53/4/J | D | 1870 | F8Q | M | +/- | TSW | 07/88 ▸ 04/92 | 7700790964 | **730180** | 480 | 396,7 | ALB |
| 1.9 TD | C53K ; B53/K/T ; L53 K/T/Z | D | 1870 | F8Q | M | +/- | TSW | 09/90 ▸ 10/95 | 6001025340 | **730973** | 585 | 396 | ALB |
| 1.9 D | B53/4/I/J ; L53/4/I/J | D | 1870 | F8Q | M | +/- | TSW | 05/92 ▸ 08/95 | 7700272527 | **730511** | 480 | 400 | CBS |
| 1.9 TD | S53K ; C53/K/T | D | 1870 | F8Q | M | - | TSW | 05/92 ▸ 10/95 | 6001025340 | **730973** | 585 | 396 | ALB |
| 1.9 D | B53/4/I/J ; C53/4/I/J ; L53/4/I/J ; S53/4/I J | D | 1870 | F8Q | M | | TSW | 07/88 ▸ 08/95 | 7700790964 | **730180** | 480 | 396,7 | ALB |
| 1.9 TD | B53Z ; S53K | D | 1870 | F8Q | M | | TSW | 07/91 ▸ 10/95 | 6001025340 | **730973** | 585 | 396 | ALB |
| 1.9 D | C534 ; S534 ; B53/4 | D | 1870 | F8Q | M | - | | 07/88 ▸ | 7700793250 | | 430 | 360 | CBS |

## R20

| | | | | | | | | | | | | | |
|---|---|---|---|---|---|---|---|---|---|---|---|---|---|
| 1.6 116201 ▸ | R127 | E | 1647 | 843 | M | - | | > ▸ 12/81 | 7700653859 | | 360 | 360 | CBS |
| 1.6 116201 ▸ | R127 | E | 1647 | 843 | A | - | | > ▸ 12/81 | 7700653859 | | 360 | 360 | CBS |
| 2.0 | R127 | E | 1995 | 829 | M | +/- | | 07/77 ▸ 06/80 | 7701349403 | | 480 | 359 | ALM |
| 2.0 | R127 | E | 1995 | 829 | M | - | | 07/80 ▸ 1984 | 7701349403 | | 480 | 359 | ALM |
| 2.0 | R127 | E | 1995 | 829 | A | +/- | | 07/77 ▸ 06/80 | 7701349403 | | 480 | 359 | ALM |
| 2.0 | R127 | E | 1995 | 829 | A | - | | 07/80 ▸ 1984 | 7701349403 | | 480 | 359 | ALM |
| 2.2 | R127 | E | 2165 | 851 | M | - | | 07/80 ▸ 1984 | 7701349403 | | 480 | 359 | ALM |
| 2.2 | R127 | E | 2165 | 851 | A | - | | 07/80 ▸ 1984 | 7701349403 | | 480 | 359 | ALM |
| 2.1 | R127 | D | 2068 | 852 | M | +/- | | 10/79 ▸ 1984 | 7700696140 | | 530 | 325 | CBS |

Radiator Radiateur Motorkühler Radiatore di raffreddamento Radiator Radyatör Radiador Радиатор vízhűtő Vodní chladič Radiator Ψυγείο



• **New** Nouveau **Nuevo** Novo **Nuovo** Nieuw **Neu** Nowość **Yeni** Новый Νέο **Nový**

# RENAULT (.../...)

| | Type Ctr. | | CC | | | AC | | | OE | Valeo | DIM. | TECH |
|---|---|---|---|---|---|---|---|---|---|---|---|---|
| **R20 (.../...)** | | | | | | | | | | | | |
| 2.1 TD Turbo D | R127 | D | 2068 | J8S | M | +/- | TSW | 09/82 ▸ 1984 | 7700736827 | **810835** | 640 328 | ALB |
| **R21** | | | | | | | | | | | | |
| 1.4 | K48/U ; L48/D/U | E | 1397 | C2J,C2L | M | +/- | TSW | 06/88 ▸ 1994 | 7700785734 | **730140** | 670 358 | CBS |
| 1.4 | B48D ; L48D | E | 1397 | C2J | M | +/- | TSW | 05/89 ▸ 03/93 | 7700784038 | **883875** | 430 377,5 | ALM |
| 1.4 | L48U | E | 1397 | C2L | M | | TSW | 06/88 ▸ 1994 | 7700784038 | **883875** | 430 377,5 | ALM |
| 1.4 | B48U ; L48U | E | 1397 | C2L | A | +/- | TSW | 06/88 ▸ 03/92 | 7700785734 | **730140** | 670 358 | CBS |
| 1.4 | L48U | E | 1397 | C2L | A | | TSW | 06/88 ▸ 03/92 | 7700784038 | **883875** | 430 377,5 | ALM |
| 1.7,1.7 i | L481 ; K48/E/F/M/N | E | 1721 | F2N,F3N | M | +/- | EXP, TSW | 03/86 ▸ 04/93 | 7700778034 | **810888** | 530 358 | ALB |
| 1.7 | K481 ; S481 | E | 1721 | F2N | M | +/- | | 06/86 ▸ 01/93 | 7700795174 | | 540 377,5 | ALM |
| 1.7 i | K48/F ; L48/E/F | E | 1721 | F3N | M | +/- | EXP, TSW | 06/86 ▸ 04/93 | 7700773289 | **810938** | 610 358 | ALB |
| 1.7 | L48/M/N | E | 1721 | F2N | M | +/- | EXP, TSW | 06/87 ▸ 04/89 | 7700773288 | **810887** | 350 358 | ALB |
| 1.7 | L481 | E | 1721 | F2N | M | +/- | TSW | 05/89 ▸ 03/93 | 7700795175 | **816552** | 620 377,5 | ALM |
| 1.7 | K484 ; L484 ; B48/1/4 | E | 1721 | F2N | M | +/- | TSW | 06/89 ▸ 08/95 | 7700785734 | **730140** | 670 358 | CBS |
| 1.7 | B481 | E | 1721 | F2N | M | +/- | TSW | 06/89 ▸ 11/92 | 7700784038 | **883875** | 430 377,5 | ALM |
| 1.7 | K482 ; L482 ; S482 ; B48/2 | E | 1721 | F2N | M | + | TSW | 06/86 ▸ 11/92 | 7700785734 | **730140** | 670 358 | CBS |
| 1.7 | K48/1/2 ; S482 ; L48/1/2 | E | 1721 | F2N | M | - | EXP, TSW | 03/86 ▸ 04/89 | 7700778034 | **810888** | 530 358 | ALB |
| 1.7 | L482 ; S482 ; K48/2 | E | 1721 | F2N | M | - | | 01/89 ▸ 05/93 | 7700795174 | | 540 377,5 | ALM |
| 1.7 | B482 ; L482 | E | 1721 | F2N | M | - | TSW | 01/89 ▸ 11/92 | 7700784038 | **883875** | 430 377,5 | ALM |
| 1.7,1.7 i | K48/1/M ; S481 ; L48 E/F/M/N | E | 1721 | F2N,F3N | M | | EXP, TSW | 06/86 ▸ 04/93 | 7700778034 | **810888** | 530 358 | ALB |
| 1.7 | K484 ; S482 | E | 1721 | F2N | M | | | 01/89 ▸ 08/95 | 7700795174 | | 540 377,5 | ALM |
| 1.7 | K481 ; L481 | E | 1721 | F2N | M | | TSW | 05/89 ▸ 03/93 | 7700784038 | **883875** | 430 377,5 | ALM |
| 1.7 | B482 ; L482 | E | 1721 | F2N | A | +/- | TSW | 06/88 ▸ 03/93 | 7700795175 | **816552** | 620 377,5 | ALM |
| 1.7,1.7 i | L482 | E | 1721 | F2N | A | +/- | EXP, TSW | 06/88 ▸ 05/89 | 7700773289 | **810938** | 610 358 | ALB |
| 1.7 | B482 ; L482 | E | 1721 | F2N | A | + | TSW | 05/89 ▸ 03/93 | 7700785734 | **730140** | 670 358 | CBS |
| 1.7 | L482 | E | 1721 | F2N | A | - | EXP, TSW | 06/88 ▸ 05/89 | 7700778034 | **810888** | 530 358 | ALB |
| 2.0 | K48J ; L48J ; B48/J | E | 1965 | F2R | M | +/- | TSW | 06/86 ▸ 03/93 | 7700785734 | **730140** | 670 358 | CBS |
| 2.0 | K48J | E | 1965 | F2R | M | +/- | EXP, TSW | 06/86 ▸ 04/89 | 7700773289 | **810938** | 610 358 | ALB |
| 2.0 | K48/3/9/S ; L48/9/S | E | 1995 | J6R,J6T,J7R | M | +/- | TSW | 06/86 ▸ 1994 | 7700785734 | **730140** | 670 358 | CBS |
| 2.0 i Turbo | L48/5/L | E | 1995 | J7R | M | +/- | | 06/87 ▸ 03/93 | 7700776694 | | 670 295 | CBS |
| 2.0,2.0 i | B48/3/C/R/Y ; K48/3 C/R ; L48/3/C/Q/R/Y | E | 1995 | J7R | M | + | TSW | 03/86 ▸ 08/95 | 7700785734 | **730140** | 670 358 | CBS |
| 2.0,2.0 i | B48/3/C/R/Y ; K48/3 C/R ; L48/3/C/Q/R/Y | E | 1995 | J7R | M | - | TSW | 05/89 ▸ 08/95 | 7700795175 | **816552** | 620 377,5 | ALM |
| 2.0 i | L483 | E | 1995 | J7R | M | | TSW | 03/86 ▸ 04/89 | 7700785734 | **730140** | 670 358 | CBS |
| 2.0 | K48/3/9/S ; L48/9/S | E | 1995 | J6R,J6T,J7R | A | +/- | TSW | 09/86 ▸ 1994 | 7700785734 | **730140** | 670 358 | CBS |
| 2.0,2.0 i | B48/3/C ; K48/3/C L48/3/C | E | 1995 | J7R | A | + | TSW | 07/86 ▸ 08/95 | 7700785734 | **730140** | 670 358 | CBS |
| 2.0 | K483 | E | 1995 | J7R | A | - | TSW | 06/88 ▸ 08/95 | 7700795175 | **816552** | 620 377,5 | ALM |
| 2.2 | K48K | E | 2165 | J7T | M | +/- | TSW | 06/86 ▸ 08/95 | 7700785734 | **730140** | 670 358 | CBS |
| 2.2,2.2 i | B48K ; L48K | E | 2165 | J7T | M | + | TSW | 08/86 ▸ 04/92 | 7700785734 | **730140** | 670 358 | CBS |
| 2.2 | K48K | E | 2165 | J7T | M | - | TSW | 05/89 ▸ 08/95 | 7700795175 | **816552** | 620 377,5 | ALM |
| 2.2,2.2 i | B48K ; L48K | E | 2165 | J7T | M | | TSW | 05/89 ▸ 03/93 | 7700795175 | **816552** | 620 377,5 | ALM |
| 2.2,2.2 i | K48K ; L48K ; B48/K | E | 2165 | J7T | A | +/- | TSW | 08/86 ▸ 08/95 | 7700785734 | **730140** | 670 358 | CBS |
| 1.9 D | K48H ; B48/H ; S48H ; L48/H/I | D | 1870 | F8Q | M | +/- | TSW | 05/89 ▸ 1994 | 7700785734 | **730140** | 670 358 | CBS |
| 2.1 D,2.1 TD | B48/0/6/7/8/P/V/W K48/0/6/7/8/P/V/W ; L48/0/6/7/8/A/O/P/V/W S48/0/6/V | D | 2068 | J8S | M | +/- | TSW | 06/86 ▸ 08/95 | 7700785734 | **730140** | 670 358 | CBS |
| **R25** | | | | | | | | | | | | |
| 2.0 | B29/2/4/7/H | E | 1995 | J6R,J7R | M | + | TSW | 09/83 ▸ 1992 | 7700757853 | **810889** | 630 328 | ALB |
| 2.0 | B29/7/H | E | 1995 | J6R,J7R | M | - | TSW | 09/83 ▸ 1992 | 7700757854 | **883851** | 460 322 | ALM |
| 2.0 | B29/2/4 | E | 1995 | J7R | M | - | | 06/88 ▸ 1992 | 7700794203 | | 620 322 | ALM |
| 2.0 | B29/2/H | E | 1995 | J7R | A | + | TSW | 06/89 ▸ 1992 | 7700757853 | **810889** | 630 328 | ALB |
| 2.0 | B297 | E | 1995 | J6R | A | - | TSW | 09/83 ▸ 1992 | 7700757853 | **810889** | 630 328 | ALB |
| 2.0 | B292 | E | 1995 | J7R | A | - | | 06/89 ▸ 1992 | 7700794203 | | 620 322 | ALM |
| 2.0 | B29H | E | 1995 | J7R | A | - | | 06/89 ▸ 1992 | 7700795055 | | 630 358 | CBS |
| 2.2 | B29B | E | 2165 | J7T | M | +/- | TSW | 09/85 ▸ 1992 | 7700757853 | **810889** | 630 328 | ALB |
| 2.2 | B29E | E | 2165 | J7T | M | + | TSW | 09/83 ▸ 1992 | 7700757853 | **810889** | 630 328 | ALB |
| 2.2 | B29E | E | 2165 | J7T | M | - | TSW | 09/83 ▸ 1992 | 7700757854 | **883851** | 460 322 | ALM |
| 2.2 | B29B | E | 2165 | J7T | A | +/- | TSW | 09/85 ▸ 1992 | 7700757853 | **810889** | 630 328 | ALB |
| 2.2 | B29E | E | 2165 | J7T | A | + | TSW | 06/88 ▸ 1992 | 7700757853 | **810889** | 630 328 | ALB |
| 2.2 | B29E | E | 2165 | J7T | A | - | TSW | 09/83 ▸ 05/88 | 7700757853 | **810889** | 630 328 | ALB |
| 2.2 | B29E | E | 2165 | J7T | A | - | | 06/88 ▸ 1992 | 7700795055 | | 630 358 | CBS |
| 2.5 V6 Turbo | B295 | E | 2458 | Z7U | M | +/- | | > ▸ 1992 | 7700768629 | | 630 358 | CBS |
| 2.5 V6 Turbo | B29G | E | 2458 | Z7U | M | +/- | | 06/89 ▸ 1992 | 6001023240 | | 650 358 | ALB |
| 2.5 V6 Turbo | B295 | E | 2458 | Z7U | M | +/- | | 09/85 ▸ | 7700757857 | | 560 358 | CBS |
| ▸ S004514 | | | | | | | | | | | | |

# RENAULT (.../...)

## R25 (.../...)

| | | | CC | | | AC | | | OE | Valeo | DIM. | TECH |
|---|---|---|---|---|---|---|---|---|---|---|---|---|
| 2.5 V6 Turbo<br>S004515 ▸ S006634 | B295 | E | 2458 | Z7U | M | +/- | | > ▸ | 7700757856 | | 630 359 | CBS |
| 2.5 V6 Turbo<br>S004515 ▸ S006634, S004514 | B295 | E | 2458 | Z7U | M | + | | > ▸ | 7700757856 | | 630 359 | CBS |
| 2.6 V6 Injection<br>S001013 ▸ | B298 | E | 2664 | Z7V | M | +/- | | > ▸ 05/88 | 7700768629 | | 630 358 | CBS |
| 2.6 V6 Injection<br>S001013 ▸ | B298 | E | 2664 | Z7V | A | +/- | | > ▸ 05/89 | 7700768629 | | 630 358 | CBS |
| 2.6 V6 Injection<br>▸ S001012 | B298 | E | 2664 | Z7V | M | + | | 09/83 ▸ | 7700757856 | | 630 359 | CBS |
| 2.6 V6 Injection<br>▸ S001012 | B298 | E | 2664 | Z7V | M | - | | 09/83 ▸ | 7700757857 | | 560 358 | CBS |
| 2.6 V6 Injection<br>▸ S001012 | B298 | E | 2664 | Z7V | A | + | | 09/83 ▸ | 7700757856 | | 630 359 | CBS |
| 2.6 V6 Injection<br>▸ S001012 | B298 | E | 2664 | Z7V | A | - | | 09/83 ▸ | 7700757857 | | 560 358 | CBS |
| 2.8 V6,2.8 V6 Injection | B29/3/A/F | E | 2849 | Z7W | M | +/- | | > ▸ 1992 | 7700768629 | | 630 358 | CBS |
| 2.8 V6 | B29/3/F | E | 2849 | Z7W | A | + | | 09/85 ▸ 1992 | 7700768629 | | 630 358 | CBS |
| 2.8 V6 | B29/3/F | E | 2849 | Z7W | A | - | | 09/85 ▸ 1992 | 7700793642 | | 630 358 | CBS |
| 2.8 V6 Injection<br>▸ S001012 | B29A | E | 2849 | Z7W | M | + | | 09/85 ▸ | 7700757856 | | 630 359 | CBS |
| 2.8 V6 Injection<br>▸ S001012 | B29A | E | 2849 | Z7W | M | - | | 09/85 ▸ | 7700757857 | | 560 358 | CBS |
| 2.1 D,2.1 TD | B29/0/6/W | D | 2068 | J8S | M | + | | 09/83 ▸ 1992 | 7700757855 | | 630 359 | CBS |
| 2.1 D,2.1 TD | B29/0/6/W | D | 2068 | J8S | M | - | TSW | 09/83 ▸ 1992 | 7700757853 | **810889** | 630 328 | ALB |

## R30

| | | | | | | | | | | | | |
|---|---|---|---|---|---|---|---|---|---|---|---|---|
| 2.7 | R127 | E | 2664 | 112,140,144 | M | - | | 03/75 ▸ 1984 | 7700620130 | | 555 358 | CBS |
| 2.7 | R127 | E | 2664 | 112,140,144 | A | - | | 03/75 ▸ 1984 | 7700620130 | | 555 358 | CBS |
| 2.1 TD Turbo D | 1270 | D | 2068 | J8S | M | - | TSW | 10/81 ▸ 1984 | 7700736827 | **810835** | 640 328 | ALB |

## AVANTIME

| | | | | | | | | | | | | |
|---|---|---|---|---|---|---|---|---|---|---|---|---|
| 2.0 i Turbo 16V | DE0/U/V | E | 1998 | F4R | M | | | 11/01 ▸ 03/03 | 6025312321 | **734828** | 635 438 | ALB |
| 2.0 i Turbo 16V | DE0/U/V | E | 1998 | F4R | A | | | 11/01 ▸ 03/03 | 6025312321 | **734828** | 635 438 | ALB |
| 3.0 i V6 24V | DE0/4/T | E | 2946 | L7X | A | | | 09/01 ▸ 03/03 | 6025310088 | | 636 440 | CBS |
| 2.2 dCi 16V | DE01 | D | 2188 | G9T | M | | | 02/02 ▸ 03/03 | 6025312321 | **734828** | 635 438 | ALB |

## CLIO (90>98)

| | | | | | | | | | | | | |
|---|---|---|---|---|---|---|---|---|---|---|---|---|
| - | 557W | L | - | 2BD | M | - | TSW | 11/95 ▸ 02/98 | 7701034767 | **816654** | 350 377,5 | ALM |
| 1.0 | B570 ; C570 | E | 956 | C1C | M | - | TSW | 06/90 ▸ 12/93 | 7701034767 | **816654** | 350 377,5 | ALM |
| 1.1 | B571 | E | 1108 | C1E | M | - | TSW | 06/90 ▸ 12/94 | 7700805486 | **816655** | 390 377,5 | ALM |
| 1.1 | C571 ; S571 ; B57/1 | E | 1108 | C1E | M | - | TSW | 06/90 ▸ 02/96 | 7701034767 | **816654** | 350 377,5 | ALM |
| 1.2 i | 357/K/Y ; 557/K/Y | E | 1149 | D7F | M | + | TSW 819745 | 03/96 ▸ 02/98 | 7700806575 | **730181** | 432 399 | CBS |
| 1.2 i | 357/K/Y ; 657K ; 557/K/Y | E | 1149 | D7F | M | - | TSW 819745 | 03/96 ▸ 02/98 | 7701034768 | **816656** | 350 377,5 | ALM |
| 1.2,1.2 i | 357/F/G/J/L ; 557/F G/J/L/R ; B57/2/A/N/R/S ; C57/2/A/R/S | E | 1171 | E5F,E7F | M | + | TSW 819745 | 06/90 ▸ 02/98 | 7700806575 | **730181** | 432 399 | CBS |
| 1.2 | C572 ; S572 ; B57/2 | E | 1171 | E5F | M | - | TSW 819745 | 06/90 ▸ 02/96 | 7701034768 | **816656** | 350 377,5 | ALM |
| 1.2,1.2 i | B57/2/A ; C57/2/A S57/2/A | E | 1171 | E5F,E7F | M | - | TSW | 06/90 ▸ 02/96 | 7701047886 | **816658** | 430 377,5 | ALM |
| 1.2 i | 357/F/G/J/L ; 557/F/G/J/L/R ; B57/A/R/S C57/A/R/S ; S57/A/R | E | 1171 | E7F | M | - | TSW | 09/90 ▸ 02/98 | 7701034770 | **816657** | 390 377,5 | ALM |
| 1.2 i | C577 ; S577 ; B57/7 | E | 1239 | C3G | M | - | TSW | 07/94 ▸ 02/96 | 7700805486 | **816655** | 390 377,5 | ALM |
| 1.4,1.4 i | 557/B ; B57/3/B/P/T Y ; C57/3/B/J/T/Y | E | 1390 | E6J,E7J | M | + | TSW 819745 | 06/90 ▸ 02/98 | 7700806575 | **730181** | 432 399 | CBS |
| 1.4,1.4 i | 557/B ; B57/3/B/J/P T/Y ; C57/3/B/J/T/Y | E | 1390 | E6J,E7J | M | - | TSW | 06/90 ▸ 02/98 | 7701034770 | **816657** | 390 377,5 | ALM |
| 1.4 i | B57B ; C57B | E | 1390 | E7J | M | - | TSW | 09/90 ▸ 02/98 | 7701047886 | **816658** | 430 377,5 | ALM |
| 1.4,1.4 i | B57/3/B/J/T ; C57/3 B/J/T | E | 1390 | E6J,E7J | A | + | TSW 819745 | 06/90 ▸ 02/98 | 7700806575 | **730181** | 432 399 | CBS |
| 1.4,1.4 i | B57/3/B/T ; C57/3/B T | E | 1390 | E6J,E7J | A | - | TSW | 06/90 ▸ 02/98 | 7701047886 | **816658** | 430 377,5 | ALM |
| 1.4 i | B57/B/J ; C57/B/J | E | 1390 | E7J | A | - | TSW | 10/94 ▸ 02/98 | 7701034770 | **816657** | 390 377,5 | ALM |
| 1.4 i | B57B | E | 1390 | E7J | A | - | TSW 819745 | 12/96 ▸ 02/98 | 7700806575 | **730181** | 432 399 | CBS |
| 1.7 | B574 ; C574 | E | 1721 | F2N | M | + | TSW | 06/90 ▸ 02/96 | 7700806576 | **730182** | 432 399 | CBS |
| 1.7 | B574 ; C574 | E | 1721 | F2N | M | - | TSW | 06/90 ▸ 02/96 | 7701034769 | **883875** | 430 377,5 | ALM |
| 1.8 i 16S | C57/5/D | E | 1763 | F7P | M | - | TSW 819745 | 03/91 ▸ 02/96 | 7700803753 | **810995** | 430 398 | ALB |
| 1.8 i | 557U ; 357/E/U/V ; B57/C/U ; C57/9/C/H/U | E | 1794 | F3P | M | + | TSW | 09/90 ▸ 02/98 | 7700806576 | **730182** | 432 399 | CBS |
| 1.8 i | 557U ; 357/E/U/V ; B57/C/U ; C57/9/C/H/U | E | 1794 | F3P | M | - | TSW | 09/90 ▸ 02/98 | 7701034769 | **883875** | 430 377,5 | ALM |
| 1.8 i | 357/A/D/U ; B578 ; C578 ; 557/D/U | E | 1794 | F3P | A | + | TSW | 01/94 ▸ 02/98 | 7700806576 | **730182** | 432 399 | CBS |
| 1.8 i | 357/A/D/U ; B578 ; C578 ; 557/D/U | E | 1794 | F3P | A | - | TSW | 01/94 ▸ 02/98 | 7701034769 | **883875** | 430 377,5 | ALM |

Radiator Ψυγείο Vodní chladič Radiator vízhűtő Радиатор Radiador Radiator Radyatör Radiator Radiatore di raffreddamento Motorkühler Radiateur Radiator



• **New** Nouveau **Nuevo** Novo **Nuovo** Nieuw **Neu** Nowość **Yeni** Новый Νέο **Novy**

# RENAULT (.../...)

## CLIO (90>98) (.../...)

| | | | CC | | AC | | | OE | Valeo | DIM. | TECH |
|---|---|---|---|---|---|---|---|---|---|---|---|
| 2.0 i | C57M | E | 1998 | F7R | M | - | TSW 819745 | 05/93 ▸ 02/96 | 7700803753 | **810995** | 430 398 | ALB |
| 1.9 D | 557N ; 357/N ; 657/H/M/N ; B57/I/L ; C57/I L ; S57/I/L | D | 1870 | F8Q | M | +/- | TSW 819745 | 03/96 ▸ 02/98 | 7700804240 | **730183** | 460 396 | ALB |
| 1.9 D | 557N ; 357/N ; 657/M/N | D | 1870 | F8Q | M | +/- | TSW | 12/97 ▸ 02/98 | 7700806576 | **730182** | 432 399 | CBS |

## CLIO II (98>2001)

| | | | | | | | | | | | | |
|---|---|---|---|---|---|---|---|---|---|---|---|---|
| 1.2 i,1.2 i GPL | CB0A ; SB0A | E | 1149 | D7F | M | + | type Calsonic | 03/98 ▸ 03/01 | 7700417175 | **732474** | 480 390 | ALB |
| 1.2 i | BB0B ; CB0B | E | 1149 | D7F | M | + | TSW | 03/98 ▸ 03/01 | 7700428082 | **732621** | 480 414,5 | ALM |
| 1.2 i,1.2 i GPL | BB0/A/F ; SB0A ; CB0 A/B/F | E | 1149 | D7F | M | + | TSW | 03/98 ▸ 12/98 | 7700430143 | **732387** | 480 395,2 | ALB |
| 1.2 i,1.2 i GPL | BB0/A/F ; SB0A ; CB0 A/B/F | E | 1149 | D7F | M | + | TSW | 12/98 ▸ 10/99 | 7700430648 | **732387** | 480 395,2 | ALB |
| 1.2 i,1.2 i GPL | BB0/A/F ; SB0A ; CB0 A/B/F | E | 1149 | D7F | M | + | TSW | 10/99 ▸ 03/01 | 7700430784 | **732523** | 480 414,5 | ALM |
| 1.2 i,1.2 i GPL | BB0/A/F ; SB0A ; CB0 A/B/F | E | 1149 | D7F | M | - | type Behr TSW | 03/98 ▸ 03/01 | 7700430647 | **732338** | 375 350 | ALM |
| 1.2 i | BB0B ; CB0B | E | 1149 | D7F | M | - | TSW | 03/98 ▸ 03/01 | 7700838134 | **731378** | 430 377,5 | ALM |
| 1.4 i,1.4 i 16V | BB0/C/L/S ; LB03 CB0/C/L/S | E | 1390 | E7J,K4J,K7J | M | + | type Calsonic | 03/98 ▸ 03/01 | 7700417175 | **732474** | 480 390 | ALB |
| 1.4 i | CB0C | E | 1390 | E7J | M | + | TSW | 03/98 ▸ 03/01 | 7700430143 | **732387** | 480 395,2 | ALB |
| 1.4 i,1.4 i 16V | BB0/L/S ; CB0/L/S | E | 1390 | E7J,K4J | M | + | TSW | 10/99 ▸ 03/01 | 7700428082 | **732621** | 480 414,5 | ALM |
| 1.4 i<br>000303 ▸ | LB03 | E | 1390 | K7J | M | + | TSW | 03/00 ▸ 03/01 | 8200343476 | **732721** | 480 414,5 | ALM |
| 1.4 i,1.4 i 16V | BB0/C/L/S ; LB03 CB0/C/L/S | E | 1390 | E7J,K4J,K7J | M | - | TSW | 03/98 ▸ 03/01 | 7700838134 | **731378** | 430 377,5 | ALM |
| 1.4 i,1.4 i 16V | BB0/S ; CB0/L/S | E | 1390 | E7J,K4J | A | + | type Calsonic | 10/98 ▸ 10/99 | 7700417175 | **732474** | 480 390 | ALB |
| 1.4 i,1.4 i 16V | BB0/L/S ; CB0/L/S | E | 1390 | E7J,K4J | A | + | TSW | 10/99 ▸ 03/01 | 7700428082 | **732621** | 480 414,5 | ALM |
| 1.4 i,1.4 i 16V | BB0/L/S ; CB0/L/S | E | 1390 | E7J,K4J | A | - | TSW | 10/98 ▸ 03/01 | 7700838134 | **731378** | 430 377,5 | ALM |
| 1.4 i 16V<br>▸ 991022 | CB0L | E | 1390 | K4J | M | + | TSW | 09/99 ▸ | 7700836304 | **732071** | 480 396 | ALB |
| 1.4 i 16V<br>▸ 991022 | CB0L | E | 1390 | K4J | A | + | TSW | 02/99 ▸ | 7700836304 | **732071** | 480 396 | ALB |
| 1.6 i,1.6 i 16V | BB0/0/D ; LB00 ; CB0 D/T | E | 1598 | K4M,K7M | M | + | type Calsonic | 03/98 ▸ 03/01 | 7700417175 | **732474** | 480 390 | ALB |
| 1.6 i 16V | CB0/H/T | E | 1598 | K4M | M | + | TSW | 07/98 ▸ 03/01 | 7700428082 | **732621** | 480 414,5 | ALM |
| 1.6 i<br>000502 ▸ | BB00 ; LB00 | E | 1598 | K7M | M | + | TSW | 07/99 ▸ 03/01 | 8200033831 | **732721** | 480 414,5 | ALM |
| 1.6 i | BB00 ; LB00 | E | 1598 | K7M | M | + | TSW | 05/00 ▸ 03/01 | 8200343476 | **732721** | 480 414,5 | ALM |
| 1.6 i,1.6 i 16V | BB0/D ; LB00 ; CB0/D H/T | E | 1598 | K4M,K7M | M | - | TSW | 03/98 ▸ 03/01 | 7700838134 | **731378** | 430 377,5 | ALM |
| 1.6 i | BB00 ; LB00 | E | 1598 | K7M | M | - | TSW | 07/99 ▸ 03/01 | 8200049077 | **732765** | 430 377,5 | ALM |
| 1.6 i | BB0D ; CB0D | E | 1598 | K7M | A | + | type Calsonic | 03/98 ▸ 03/01 | 7700417175 | **732474** | 480 390 | ALB |
| 1.6 i | BB0D ; CB0D | E | 1598 | K7M | A | - | TSW | 03/98 ▸ 03/01 | 7700838134 | **731378** | 430 377,5 | ALM |
| 2.0 i 16V | CB0M | E | 1998 | F4R | M | + | type Calsonic | 01/00 ▸ 03/01 | 7700417175 | **732474** | 480 390 | ALB |
| 3.0 i V6 24V | CB1A | E | 2946 | L7X | M | +/- | | 01/00 ▸ 03/01 | 8200008766 | | 680 398 | ALB |
| 1.9 D | BB0/2/E/J ; LB02 ; CB0/E/J ; SB0/E/J/R | D | 1870 | F8Q | M | + | TSW | 03/98 ▸ 03/01 | 7700836304 | **732071** | 480 396 | ALB |
| 1.9 dTi | BB0U ; CB0U | D | 1870 | F9Q | M | + | TSW | 11/99 ▸ 03/01 | 8200033831 | **732721** | 480 414,5 | ALM |
| 1.9 dTi | BB0U | D | 1870 | F9Q | M | + | TSW | 11/99 ▸ 03/01 | 7700428082 | **732621** | 480 414,5 | ALM |
| 1.9 D | BB0/2/E/J ; LB02 ; CB0/E/J ; SB0/E/R | D | 1870 | F8Q | M | - | type Calsonic | 03/98 ▸ 05/00 | 7700417175 | **732474** | 480 390 | ALB |
| 1.9 D | BB02 ; LB02 | D | 1870 | F8Q | M | - | TSW | 09/99 ▸ 03/01 | 8200049080 | **732761** | 480 414,5 | ALM |
| 1.9 D | BB0/E/J ; LB02 ; CB0/E/J ; SB0/E/J/R | D | 1870 | F8Q | M | - | TSW | 10/99 ▸ 03/01 | 7700428658 | **732720** | 480 414,5 | ALM |
| 1.9 dTi | BB0U ; CB0U | D | 1870 | F9Q | M | - | TSW | 11/99 ▸ 03/01 | 7700838134 | **731378** | 430 377,5 | ALM |

## CLIO II (2001>)

| | | | | | | | | | | | | |
|---|---|---|---|---|---|---|---|---|---|---|---|---|
| 1.2 GPL | BB1K | G | 1149 | D7F | M | + | | 04/01 ▸ | 8200164413 | | 480 414,5 | ALM |
| 1.2 i GPL | CB0A ; SB0A ; BB0/A | G | 1149 | D7F | M | + | TSW | 04/01 ▸ 12/04 | 7700430784 | **732523** | 480 414,5 | ALM |
| 1.2 GPL | BB1K | G | 1149 | D7F | M | + | TSW | 04/01 ▸ | 8200164413 | **732523** | 480 414,5 | ALM |
| 1.2 i GPL | CB0A ; SB0A ; BB0/A | G | 1149 | D7F | M | + | TSW | 04/01 ▸ 12/04 | 7700428082 | **732621** | 480 414,5 | ALM |
| 1.2 GPL,1.2 i GPL | BB1K ; CB0A ; SB0A BB0/A | G | 1149 | D7F | M | - | type Behr TSW | 04/01 ▸ | 7700430647 | **732338** | 375 350 | ALM |
| 1.2 i GPL | CB0A ; SB0A ; BB0/A | G | 1149 | D7F | M | - | TSW | 04/01 ▸ 12/04 | 7700838134 | **731378** | 430 377,5 | ALM |
| 1.6 i GNV | SB0H | F | 1598 | K4M | M | | TSW | 04/01 ▸ 12/04 | 7700428082 | **732621** | 480 414,5 | ALM |
| 1.0 i 16V | BB2R ; BB3B ; CB06 CB3B ; LB06 ; LB3B ; BB0/6 | E | 999 | D4D | M | + | TSW | 04/01 ▸ 09/08 | 8200343476 | **732721** | 480 414,5 | ALM |
| 1.0 i 16V | BB2R ; BB3B ; CB06 CB2R ; CB3B ; LB06 ; LB3B ; BB0/6 | E | 999 | D4D | M | - | TSW | 04/01 ▸ 09/08 | 7700838134 | **731378** | 430 377,5 | ALM |
| 1.0 i | BB2Y ; CB0Y ; CB2Y ; BB0/Y | E | 999 | D7D | M | - | TSW | 04/01 ▸ 12/04 | 7701499975 | **732389** | 430 377,5 | ALM |
| 1.0 i 16V | BB2R ; CB2R | E | 999 | D4D | M | | TSW | 04/01 ▸ 12/04 | 8200343476 | **732721** | 480 414,5 | ALM |
| 1.2 i,1.2 i GPL | BB1/K ; CB1K ; BB2/8 D/H ; SB1K ; CB2/D/H ; SB2/D/H | E | 1149 | D7F | M | + | TSW | 04/01 ▸ 01/06 | 8200164413 | **732523** | 480 414,5 | ALM |

# RENAULT (.../...)

## CLIO II (2001>) (.../...)

| | | CC | | AC | | | OE | Valeo | DIM. | TECH |
|---|---|---|---|---|---|---|---|---|---|---|
| 1.2 i,1.2 i GPL BB0/A/F ; BB1/0/K BB2/8/D/H ; CB0/A/F ; CB1/0/K ; CB2/D/H SB0/A/F ; SB1/0/K ; SB2/D/H | E | 1149 | D7F | M | + | TSW | 04/01 ▸ 01/06 | 7711134331 | **732523** | 480 414,5 | ALM |
| 1.2 i,1.2 i GPL BB1/K ; CB1K ; BB2/8 D/H ; SB1K ; CB2/D/H ; SB2/D/H | E | 1149 | D7F | M | + | | 04/01 ▸ 01/06 | 8200164413 | | 480 414,5 | ALM |
| 1.2 i,1.2 i GPL BB0/A/F ; BB1/0/K BB2/8/D/H ; CB0/A/F ; CB1/0/K ; CB2/D/H SB0/A/F ; SB1/0/K ; SB2/D/H | E | 1149 | D7F | M | + | TSW | 04/01 ▸ | 7700430784 | **732523** | 480 414,5 | ALM |
| 1.2 i,1.2 i GPL BB0/A/F ; BB1/0/K BB2/8/D/H ; CB0/A/F ; CB1/0/K ; CB2/D/H SB0/A/F ; SB1/0/K ; SB2/D/H | E | 1149 | D7F | M | - | type Behr TSW | 04/01 ▸ 01/06 | 7700430647 | **732338** | 375 350 | ALM |
| 1.2 i,1.2 i 16V,1.2 i GPL BB0/5/F/W ; BB1/0/1 9/K ; BBDU ; BB2/7/T/U/V ; CB0/5/F/W ; CB1/0 1/9/K ; CB2/7/T/U/V ; LB1/1/9/Y ; SB0F SB10 ; LB2/7/R/U/V | E | 1149 | D4F,D7F | M | - | TSW | 04/01 ▸ | 7700838134 | **731378** | 430 377,5 | ALM |
| 1.2 i 16V LB2V | E | 1149 | D4F | A | | TSW | 04/01 ▸ | 7700838134 | **731378** | 430 377,5 | ALM |
| 1.2 i,1.2 i 16V,1.2 i GPL BB0/5/F/W ; BB1/0/1 9/K ; CB0/5/F/W ; CB1/0/1/9/K ; LB2R ; SB0F SB10 ; LB1/1/9/Y ▸ 030324 | E | 1149 | D4F,D7F | M | + | TSW | 04/01 ▸ 09/08 | 7700428082 | **732621** | 480 414,5 | ALM |
| 1.2 i 16V LB2V ▸ 030324 | E | 1149 | D4F | A | + | TSW | 04/01 ▸ 03/03 | 7700428082 | **732621** | 480 414,5 | ALM |
| 1.4 i,1.4 i 16V BB0/B/C/L/P/S ; BB1 3/7/L ; CB0/B/C/L/P/S ; CB1/3/7/L ; LB0/3/B K/L/P ; LB1/3/7 ; LB2/A/B ; LB3/D/K | E | 1390 | E7J,K4J,K7J | M | + | TSW | 04/01 ▸ | 7700428082 | **732621** | 480 414,5 | ALM |
| 1.4 i,1.4 i 16V BB0/B/C/L/P/S ; BB1 3/7/L ; CB0/B/C/L/P/S ; CB1/3/7/L ; LB0/3/B K/L/P ; LB1/3/7 ; LB2/A/B ; LB3/D/K | E | 1390 | E7J,K4J,K7J | M | - | TSW | 04/01 ▸ | 7700838134 | **731378** | 430 377,5 | ALM |
| 1.4 i,1.4 i 16V BB0/L/P/S ; BB1/3/L CB0/L/P/S ; CB1/3/L ; LB0/K/L ; LB3D ; LB2 A/B | E | 1390 | E7J,K4J | A | + | TSW | 04/01 ▸ 09/08 | 7700428082 | **732621** | 480 414,5 | ALM |
| 1.4 i,1.4 i 16V BB0/L/P/S ; BB1/3/L CB0/L/P/S ; CB1/3/L ; LB0/K/L ; LB3D ; LB2 A/B | E | 1390 | E7J,K4J | A | - | TSW | 04/01 ▸ | 7700838134 | **731378** | 430 377,5 | ALM |
| 1.4 i 16V BB0/L/P ; BB1/3/L CB0/L/P ; CB1/3/L ; LB13 ; LB0/K/L/P LB3D ; LB2/A/B ▸ 030324 | E | 1390 | K4J | M | + | TSW | 04/01 ▸ 03/03 | 8200343476 | **732721** | 480 414,5 | ALM |
| 1.4 i 16V BB0/P ; CB0P ; BB1/3 L ; CB1/3/L ▸ 030324 | E | 1390 | K4J | A | + | TSW | 04/01 ▸ 03/03 | 8200343476 | **732721** | 480 414,5 | ALM |
| 1.6 i CB0D ; LB00 ; BB0/0/D | E | 1598 | K7M | M | + | type Calsonic | 04/01 ▸ 09/08 | 7700417175 | **732474** | 480 390 | ALB |
| 1.6 i,1.6 i 16V BB0/0/1/H/T ; BB1/4 D/J/R ; BB2/6/K ; BB3/E/G/H ; CB0/1/H/T/Y CB26 ; CB1/4/D ; CB3/E/G/H ; LB0/0/1 ; LB1 8/B/J/R/V ; LB2/6/K ; LB3/E/G/H | E | 1598 | K4M,K7M | M | + | TSW | 04/01 ▸ | 8200343476 | **732721** | 480 414,5 | ALM |
| 1.6 i,1.6 i 16V BB0/0/1/D/H/T ; BB1 4/D/J/R ; BB2/6/K ; BB3/E/G/H ; CB0/1/D/H/T Y ; CB26 ; CB1/4/D ; CB3/E/G/H ; LB0/0/1 LB1/8/J/R/V ; LB2/6/K ; LB3/E/G/H | E | 1598 | K4M,K7M | M | - | TSW | 04/01 ▸ | 7700838134 | **731378** | 430 377,5 | ALM |
| 1.6 i 16V BB2K ; BB1/4/D/R LB1R ; LB2K ; CB1/4/D | E | 1598 | K4M | A | + | TSW | 04/01 ▸ 09/08 | 8200343476 | **732721** | 480 414,5 | ALM |
| 1.6 i BB0D ; CB0D | E | 1598 | K7M | A | + | type Calsonic | 04/01 ▸ 12/04 | 7700417175 | **732474** | 480 390 | ALB |
| 1.6 i,1.6 i 16V BB0/D ; BB2K ; CB0D BB1/4/D/R ; LB1R ; LB2K ; CB1/4/D | E | 1598 | K4M,K7M | A | - | TSW | 04/01 ▸ 09/08 | 7700838134 | **731378** | 430 377,5 | ALM |
| 1.6 i 16V BB0/H/T ; BB1/4/D CB0/H/T ; CB1/4/D ▸ 030324 | E | 1598 | K4M | M | + | TSW | 04/01 ▸ 03/03 | 7700428082 | **732621** | 480 414,5 | ALM |
| 1.6 i 16V BB1/4/D ; CB1/4/D ▸ 030324 | E | 1598 | K4M | A | + | TSW | 04/01 ▸ 03/03 | 7700428082 | **732621** | 480 414,5 | ALM |
| 2.0 i 16V CB0/M ; CB1/5/C/G/N S/T ; CB2/0/1/2/P | E | 1998 | F4R | M | +/- | type Calsonic | 04/01 ▸ 12/04 | 7700417175 | **732474** | 480 390 | ALB |
| 3.0 i V6 24V CB1/H/U | E | 2946 | L7X | M | | | 04/01 ▸ 05/05 | 8200008766 | | 680 398 | ALB |
| 1.5 dCi CB08 ; BB0/8 ; SB08 LB2/3/E | D | 1461 | K9K | M | +/- | TSW | 04/01 ▸ 09/08 | 7700436916 | **732737** | 480 414,7 | ALB |
| 1.5 dCi BB1W ; BB24 ; CB07 CB1W ; LB07 ; LB1W ; LB24 ; BB0/7 ; SB0/7/9 | D | 1461 | K9K | M | + | TSW | 04/01 ▸ 09/08 | 8200343476 | **732721** | 480 414,5 | ALM |
| 1.5 dCi BB2/G/J ; BB8N BBBN ; BB3/M/N ; CB2/G/J ; CB8N ; CBBN LB29 ; CB3/M/N ; SB2J ; LB3/M/N ; SB3/A/M | D | 1461 | K9K | M | + | | 04/01 ▸ | 8200245596 | **732960** | 479 414 | ALB |

Radiator Ψυγείο Vodní chladič Радиатор vízhűtő Radiador Radiator Radyatör Radiator Radiatore di raffreddamento Motorkühler Radiateur Radiator



• **New** Nouveau **Nuevo** Novo **Nuovo** Nieuw **Neu** Nowość **Yeni** Новый Νέο **Nový**

| | | CC | | AC | | | OE | Valeo | DIM. | TECH |
|---|---|---|---|---|---|---|---|---|---|---|
| **RENAULT** (.../...) | | | | | | | | | | |
| **CLIO II (2001>) (.../...)** | | | | | | | | | | |
| 1.5 dCi BB1W ; BB24 ; CB07 CB1W ; LB07 ; LB1W ; LB24 ; BB0/7 ; SB0/7/9 | D | 1461 | K9K | M | - | TSW | 04/01 ▸ 09/08 | 7700838134 | **731378** | 430 377,5 | ALM |
| 1.9 dTi CB2C ; CB0/U/V | D | 1870 | F9Q | M | + | TSW | 04/01 ▸ | 8200033831 | **732721** | 480 414,5 | ALM |
| 1.9 D BB0/2/E/J ; LB02 ; CB0/E/J ; SB0/E/J/R | D | 1870 | F8Q | M | + | TSW | 04/01 ▸ | 7700836304 | **732071** | 480 396 | ALB |
| 1.9 D CB0J | D | 1870 | F8Q | M | + | TSW | 04/01 ▸ 05/05 | 8200049080 | **732761** | 480 414,5 | ALM |
| 1.9 dTi BB2C ; BB0/U/V CB2C ; SB0U ; CB0/U/V | D | 1870 | F9Q | M | + | TSW | 04/01 ▸ | 8200343476 | **732721** | 480 414,5 | ALM |
| 1.9 dTi BB2C ; BB0/V ; CB2C SB0U ; CB0/U/V | D | 1870 | F9Q | M | - | TSW | 04/01 ▸ 05/05 | 7700838134 | **731378** | 430 377,5 | ALM |
| 1.9 D BB0/2/E/J ; LB02 ; CB0/E/J ; SB0/E/J/R | D | 1870 | F8Q | M | - | TSW | 04/01 ▸ | 7700428658 | **732720** | 480 414,5 | ALM |
| 1.9 D CB0E ; LB02 ; BB0/2/E/J ; SB0/E/J/R | D | 1870 | F8Q | M | - | TSW | 04/01 ▸ 09/08 | 8200049080 | **732761** | 480 414,5 | ALM |
| **CLIO III (2005>)** | | | | | | | | | | |
| 1.2 i 16V BR1U ; CR1U | F | 1149 | D4F | M | - | | 04/08 ▸ 04/09 | 8200138738 | **732903** | 494 403 | ALM |
| 1.2 i 16V,1.2 i TCE 16V BR0/1/2/3/E/J/P/Q/R S ; BR1/D/L ; CR0/2/3/E/J/P/Q/R/S ; CR1/D/L KR0/E/J/P ; SR0/J/S | E | 1149 | D4F | M | - | | 09/05 ▸ | 8200138738 | **732903** | 494 403 | ALM |
| 1.4 i 16V BR1E ; BR0/0/A CR1E ; SR0A ; CR0/0/A | E | 1390 | K4J | M | + | | 09/05 ▸ 04/09 | 8200468913 | **734462** | 492 406,3 | ALB |
| 1.4 i 16V BR1E ; BR0/0/A CR1E ; KR0A ; SR0A ; CR0/0/A | E | 1390 | K4J | M | - | | 09/05 ▸ 04/09 | 8200365427 | **734246** | 380 445 | ALB |
| 1.6 i 16V BR0/5/9/B/T/U/Y BR1/J/M ; CR1M ; CR0/5/9/B/T/U/Y ; KR0/9/B | E | 1598 | K4M | M | + | | 09/05 ▸ 04/09 | 8200468913 | **734462** | 492 406,3 | ALB |
| 1.6 i 16V KR09 | E | 1598 | K4M | M | + | | 01/08 ▸ 04/09 | 8200365427 | **734246** | 380 445 | ALB |
| 1.6 i 16V BR0/5/9/B/T/U/Y BR1/J/M ; CR1M ; KR0B ; CR0/5/9/B/T/U/Y | E | 1598 | K4M | M | - | | 09/05 ▸ 04/09 | 8200365427 | **734246** | 380 445 | ALB |
| 1.6 i 16V BR0/B/Y ; BR1/J/M CR1M ; KR0B ; CR0/B/Y | E | 1598 | K4M | A | + | | 09/05 ▸ 04/09 | 8200468913 | **734462** | 492 406,3 | ALB |
| 1.6 i 16V KR0B | E | 1598 | K4M | A | + | | 01/08 ▸ 04/09 | 8200365427 | **734246** | 380 445 | ALB |
| 1.6 i 16V BR0/B/Y ; BR1/J/M CR0/B/Y ; CR1/J/M | E | 1598 | K4M | A | - | | 09/05 ▸ 04/09 | 8200365427 | **734246** | 380 445 | ALB |
| 2.0 i 16V BR0/6/7/C/K ; CR0/6 7/C/K | E | 1997 | M4R | M | + | | 09/06 ▸ 04/09 | 8200443896 | **735156** | 492 406,3 | ALB |
| 2.0 i 16V BR0C ; CR0C | E | 1997 | M4R | A | + | | 09/06 ▸ 04/09 | 8200443896 | **735156** | 492 406,3 | ALB |
| 2.0 i 16V CR0N | E | 1998 | F4R | M | + | | 06/06 ▸ 04/09 | 8200489879 | **734461** | 492 406,3 | ALB |
| 1.5 dCi BR1/C/N ; CR1/C/N KR1/C/N | D | 1461 | K9K | M | + | | 09/05 ▸ 04/09 | 8200468913 | **734462** | 492 406,3 | ALB |
| 1.5 dCi BR0/F/G/H/V/W ; BR1 A/B/C/F/G/N ; CR0/F/G/H/V/W ; CR1/C/G/N KR0/F/G/H ; KR1/A/C/N ; SR0/F/G/H | D | 1461 | K9K | M | - | | 09/05 ▸ 04/09 | 8200138738 | **732903** | 494 403 | ALM |
| **CLIO III FL (2009>)** | | | | | | | | | | |
| 1.2 i 75 16V CR1U ; KR1U ; SR1U BR1/U | F | 1149 | D4F | M | - | | 04/09 ▸ | 8200138738 | **732903** | 494 403 | ALM |
| 1.2 TCe 100 16V BR0/1/2/3/4/E/J/P/R 1.2 i 65 16V,1.2 i 75 16V BR1/1/D/L ; CR11 CR0/2/4/E/J/P/R ; SR0P ; KR0/2/4/E/J/P | E | 1149 | D4F | M | - | | 04/09 ▸ | 8200138738 | **732903** | 494 403 | ALM |
| 1.4 i 16V BR00 ; BR1E | E | 1390 | K4J | M | - | | 04/09 ▸ | 8200365427 | **734246** | 380 445 | ALB |
| 1.6 i 110 16V BR0/5/B/Y ; BR1/0/5 1.6 i 128 16V J/M/Y ; CR0/B/Y KR0B ; KR10 ; CR1/0/5/M/Y | E | 1598 | K4M | M | - | | 04/09 ▸ | 8200365427 | **734246** | 380 445 | ALB |
| 1.6 i 110 16V BR0/B/Y ; BR1/5/J/M Y ; CR0/B/Y ; KR0B ; CR1/5/J/M/Y | E | 1598 | K4M | A | - | | 04/09 ▸ | 8200365427 | **734246** | 380 445 | ALB |
| 2.0 i 140 16V BR0/C/K ; CR0/C/K | E | 1997 | M4R | M | +/- | | 04/09 ▸ | 8200443896 | **735156** | 492 406,3 | ALB |
| 2.0 i 140 16V BR0C ; CR0C | E | 1997 | M4R | A | +/- | | 04/09 ▸ | 8200443896 | **735156** | 492 406,3 | ALB |
| 2.0 i 201 16V CR0N | E | 1998 | F4R | M | | | 04/09 ▸ | 8200489879 | **734461** | 492 406,3 | ALB |
| 1.5 dCi 105,1.5 dCi 70 BR0/F/G/H ; BR1/C/N 1.5 dCi 85 T ; CR0/F/G/H ; CR1 C/N/T ; KR0/F/G/H ; KR1/C/N ; SR0/F/G/H | D | 1461 | K9K | M | + | | 04/09 ▸ | 8200468913 | **734462** | 492 406,3 | ALB |
| 1.5 dCi 105 BR0/F/G/H ; BR1/7/C 1.5 dCi 106 16V N/S/T ; CR0/F/G/H 1.5 dCi 70,1.5 dCi 85 CR1/7/C/N/T ; KR0/F G/H ; KR1/7/C/N ; SR17 ; SR0/F/G/H | D | 1461 | K9K | M | - | | 04/09 ▸ | 8200138738 | **732903** | 494 403 | ALM |
| **CLIO CAMPUS EVOLUTION (2009>)** | | | | | | | | | | |
| 1.2 i 16V BB1K ; CB1K | F | 1149 | D7F | M | | TSW | 06/09 ▸ | 8200164413 | **732523** | 480 414,5 | ALM |
| 1.2 i 16V BB1K | E | 1149 | D7F | M | +/- | TSW | 06/09 ▸ | 8200164413 | **732523** | 480 414,5 | ALM |
| 1.2 i 16V BB2/7/T/U/V ; CB2/7 T/U/V | E | 1149 | D4F | M | | TSW | 06/09 ▸ | 7700838134 | **731378** | 430 377,5 | ALM |

# RENAULT (.../...)

## CLIO CAMPUS EVOLUTION (2009>) (.../...)

| Type Ctr. | | CC | | AC | | | OE | Valeo | DIM. | TECH |
|---|---|---|---|---|---|---|---|---|---|---|
| 1.5 dCi 70,1.5 dCi 85 CB3N ; BB3/N ; SB3/MN | D | 1461 | K9K | M | | | 06/09 ▸ 12/09 | 8200245596 | **732960** | 479 414 | ALB |

## ESPACE (84>91)

| Type Ctr. | | CC | | AC | | | OE | Valeo | DIM. | TECH |
|---|---|---|---|---|---|---|---|---|---|---|
| 2.0 J116 | E | 1995 | J7R | M | + | TSW | 06/87 ▸ 01/91 | 7700785734 | **730140** | 670 358 | CBS |
| 2.0 J112 ; S112 T016173, T000218 ▸ | E | 1995 | J6R | M | | TSW | > ▸ 01/91 | 7700757854 | **883851** | 460 322 | ALM |
| 2.0 S112 ; J11/2/6 ▸ T016172, T000217 NE | E | 1995 | J6R,J7R | M | | TSW | 09/84 ▸ | 7700736827 | **810835** | 640 328 | ALB |
| 2.2 J117 | E | 2165 | J7T | M | + | TSW | 09/86 ▸ 01/91 | 7700785734 | **730140** | 670 358 | CBS |
| 2.2 J117 | E | 2165 | J7T | M | | TSW | 09/86 ▸ 01/91 | 7700736827 | **810835** | 640 328 | ALB |
| 2.1 TD S115 ; J11/4/5 | D | 2068 | J8S | M | + | TSW | 09/84 ▸ 1991 | 7700785734 | **730140** | 670 358 | CBS |
| 2.1 TD S115 ; J11/4/5 | D | 2068 | J8S | M | | TSW | 09/84 ▸ 01/91 | 7700736827 | **810835** | 640 328 | ALB |

## ESPACE II (91>96)

| Type Ctr. | | CC | | AC | | | OE | Valeo | DIM. | TECH |
|---|---|---|---|---|---|---|---|---|---|---|
| 2.0 i J636 | E | 1995 | J7R | M | + | TSW | 01/91 ▸ 08/96 | 6025101338 | **730184** | 621 396 | ALB |
| 2.0 i J636 | E | 1995 | J7R | M | - | TSW | 01/91 ▸ 06/91 | 6025107990 | **819431** | 620 398 | ALB |
| 2.0 i J636 | E | 1995 | J7R | M | - | TSW | 01/91 ▸ 08/96 | 7700795175 | **816552** | 620 377,5 | ALM |
| 2.2 i S637 ; J63/7/G | E | 2165 | J7T | M | + | TSW | 01/91 ▸ 08/96 | 6025101338 | **730184** | 621 396 | ALB |
| 2.2 i J63/7/G | E | 2165 | J7T | M | - | TSW | 01/91 ▸ 08/96 | 7700795175 | **816552** | 620 377,5 | ALM |
| 2.2 i S637 | E | 2165 | J7T | M | | TSW | 01/91 ▸ 05/96 | 7700795175 | **816552** | 620 377,5 | ALM |
| 2.2 i J637 | E | 2165 | J7T | A | + | TSW | 01/91 ▸ 08/96 | 6025101338 | **730184** | 621 396 | ALB |
| 2.2 i J637 | E | 2165 | J7T | A | - | TSW | 01/91 ▸ 08/96 | 7700795175 | **816552** | 620 377,5 | ALM |
| 2.2 i J637 ; S637 ▸ T00010607 | E | 2165 | J7T | M | - | TSW | 01/91 ▸ | 6025107990 | **819431** | 620 398 | ALB |
| 2.2 i J637 ▸ T00010607 | E | 2165 | J7T | A | - | TSW | 01/91 ▸ | 6025107990 | **819431** | 620 398 | ALB |
| 2.8 V6 J638 | E | 2849 | Z7W | M | +/- | | 04/91 ▸ 08/96 | 6025101341 | **730185** | 621 397 | CBS |
| 2.8 V6 J63/8/J | E | 2849 | Z7W | A | +/- | | 04/91 ▸ 08/96 | 6025101341 | **730185** | 621 397 | CBS |
| 2.1 dT,2.1 dTv J63/3/4/5/D/E ; S63 5/D | D | 2068 | J8S | M | + | TSW | 01/91 ▸ 08/96 | 6025101338 | **730184** | 621 396 | ALB |
| 2.1 dT,2.1 dTv J63/3/4/5/D/E ; S63 5/D | D | 2068 | J8S | M | - | TSW | 01/91 ▸ 08/96 | 6025107990 | **819431** | 620 398 | ALB |

## ESPACE III (96>2000)

| Type Ctr. | | CC | | AC | | | OE | Valeo | DIM. | TECH |
|---|---|---|---|---|---|---|---|---|---|---|
| 2.0 i JE0A | E | 1998 | F3R | M | + | TSW | 09/96 ▸ 06/00 | 7700876214 | **731161** | 635 441 | CBS |
| 2.0 i,2.0 i 16V JE0/A/N | E | 1998 | F3R,F4R | M | + | TSW | 12/98 ▸ 06/00 | 6025313324 | **734284** | 648 458 | ALB |
| 2.0 i JE0A | E | 1998 | F3R | M | - | TSW | 09/96 ▸ 06/00 | 7701038237 | **731128** | 560 414,5 | ALM |
| 2.0 i 16V JE0N | E | 1998 | F4R | M | - | TSW | 12/98 ▸ 06/00 | 6025313331 | **734284** | 648 458 | ALB |
| 2.0 i JE0A | E | 1998 | F3R | A | + | TSW | 09/96 ▸ 06/00 | 7700876214 | **731161** | 635 441 | CBS |
| 2.0 i JE0A | E | 1998 | F3R | A | + | TSW | 02/99 ▸ 06/00 | 6025313324 | **734284** | 648 458 | ALB |
| 2.0 i JE0A | E | 1998 | F3R | A | - | TSW | 09/96 ▸ 06/00 | 7701038237 | **731128** | 560 414,5 | ALM |
| 3.0 i V6 JE0G | E | 2946 | L7X | A | + | | 07/98 ▸ 06/00 | 6025310088 | | 636 440 | CBS |
| 3.0 i V6 JE0D | E | 2963 | Z7X | A | + | TSW 820032 | 09/96 ▸ 06/98 | 7700876213 | **731738** | 634 438 | ALB |
| 1.9 dTi JE0M | D | 1870 | F9Q | M | - | TSW | 1999 ▸ 06/00 | 7701045345 | **732544** | 635 425 | ALB |
| 1.9 dTi JE0M | D | 1870 | F9Q | M | - | TSW | 10/99 ▸ 06/00 | 7701049754 | **732544** | 635 425 | ALB |
| 2.2 dT JE0/E/H/P | D | 2188 | G8T | M | +/- | | 10/97 ▸ 06/00 | 6025372518 | | 630 358 | CBS |
| 2.2 dT JE0/E/P | D | 2188 | G8T | M | +/- | TSW 820032 | 01/98 ▸ 06/00 | 6025306734 | **734285** | 425 756,8 | ALB |
| 2.2 dT JE0/E/H | D | 2188 | G8T | M | + | TSW 820032 | 09/96 ▸ 10/97 | 7701041957 | **731529** | 650 470 | ALB |
| 2.2 dT JE0/E/H 971001 ▸ | D | 2188 | G8T | M | + | TSW 820032 | 10/97 ▸ 06/00 | 6025306734 | **734285** | 425 756,8 | ALB |
| 2.2 dT JE0/E/H | D | 2188 | G8T | M | - | TSW 820032 | 09/96 ▸ 11/97 | 7701040662 | **731129** | 650 442 | ALB |
| 2.2 dT JE0/E/H | D | 2188 | G8T | M | - | TSW 820032 | 11/97 ▸ 06/00 | 6025306734 | **734285** | 425 756,8 | ALB |

## ESPACE III (2000>2002)

| Type Ctr. | | CC | | AC | | | OE | Valeo | DIM. | TECH |
|---|---|---|---|---|---|---|---|---|---|---|
| 2.0 i 16V JE0L | E | 1998 | F4R | M | +/- | TSW | 07/00 ▸ 10/02 | 6025313324 | **734284** | 648 458 | ALB |
| 2.0 i 16V JE0L | E | 1998 | F4R | A | +/- | TSW | 07/00 ▸ 10/02 | 6025313324 | **734284** | 648 458 | ALB |
| 2.0 i 16V JE0L | E | 1998 | F4R | A | - | TSW | 07/00 ▸ 10/02 | 6025313324 | **734284** | 648 458 | ALB |
| 3.0 i V6 JE0G | E | 2946 | L7X | A | + | | 07/00 ▸ 10/02 | 6025310088 | | 636 440 | CBS |
| 1.9 dTi JE0M | D | 1870 | F9Q | M | + | | 07/00 ▸ 10/02 | 6025316378 | | 635 438 | |
| 1.9 dTi JE0M | D | 1870 | F9Q | M | - | TSW | 07/00 ▸ 10/02 | 7701049754 | **732544** | 635 425 | ALB |
| 2.2 dCi JE0/K/S | D | 2188 | G9T | M | + | | 07/00 ▸ 10/02 | 6025312321 | **734828** | 635 438 | ALB |

## ESPACE IV (2002>2006)

| Type Ctr. | | CC | | AC | | | OE | Valeo | DIM. | TECH |
|---|---|---|---|---|---|---|---|---|---|---|
| 2.0 i 16V JK0/K/L | E | 1998 | F4R | M | + | | 09/02 ▸ 02/06 | 8200008764 | **732827** | 670 414,5 | ALM |
| 2.0 i Turbo 16V JK1D ; JK0/8/A/B/D/N | E | 1998 | F4R | M | + | | 09/02 ▸ 02/06 | 8200302463 | **732828** | 675 414,5 | ALM |
| 2.0 i 16V JK0K | E | 1998 | F4R | A | + | | 09/02 ▸ 02/06 | 8200008764 | **732827** | 670 414,5 | ALM |
| 2.0 i Turbo 16V JK1D ; JK0/8/A/B/D/N | E | 1998 | F4R | A | + | | 09/02 ▸ 02/06 | 8200302463 | **732828** | 675 414,5 | ALM |
| 3.5 i V6 24V JK0/F/P/S | E | 3498 | V4Y | A | + | | 09/02 ▸ 02/06 | 8200008766 | | 680 398 | ALB |
| 1.9 dCi JK0/G/U | D | 1870 | F9Q | M | + | | 09/02 ▸ 02/06 | 8200302463 | **732828** | 675 414,5 | ALM |

Radiator Radiateur Motorkühler Radiatore di raffreddamento Radiator Radyatör Radiador Радиатор vízhűtő Vodní chladič Radiator Ψυγείο



• **New** Nouveau **Nuevo** Novo **Nuovo** Nieuw **Neu** Nowość **Yeni** Новый Νέο **Novy**

# RENAULT (.../...)

## ESPACE IV (2002>2006) (.../...)

| | | | CC | | AC | | | OE | Valeo | DIM. | | TECH |
|---|---|---|---|---|---|---|---|---|---|---|---|---|
| 2.2 dCi 16V | JK0/H/T | D | 2188 | G9T | M | + | | 09/02 ▸ 02/06 | 8200302463 | **732828** | 675 414,5 | ALM |
| 2.2 dCi 16V | JK0H | D | 2188 | G9T | A | + | | 09/02 ▸ 02/06 | 8200302463 | **732828** | 675 414,5 | ALM |
| 2.2 dCi 16V | JK0H | D | 2188 | G9T | A | | | 09/02 ▸ 02/06 | 8200033729 | **734728** | 680 438 | ALB |
| 3.0 dCi 24V | JK0J | D | 2958 | P9X | A | + | | 09/02 ▸ 02/06 | 8200033729 | **734728** | 680 438 | ALB |

## ESPACE IV PHASE 2 (2006>)

| | | | | | | | | | | | | |
|---|---|---|---|---|---|---|---|---|---|---|---|---|
| 2.0 i 16V | JK09 | E | 1998 | F4R | M | + | | 03/06 ▸ | 8200302463 | **732828** | 675 414,5 | ALM |
| 2.0 i Turbo 16V | JK0A | E | 1998 | F4R | M | | | 05/07 ▸ | 8200302463 | **732828** | 675 414,5 | ALM |
| 2.0 i Turbo 16V | JK0A | E | 1998 | F4R | A | | | 05/07 ▸ | 8200302463 | **732828** | 675 414,5 | ALM |
| 2.0 dCi 16V | JK0/1/2 | D | 1995 | M9R | M | + | | 03/06 ▸ | 8200292771 | •**735489** | 680 448 | ALM |
| 2.0 dCi 16V | JK01 | D | 1995 | M9R | M | | | 03/06 ▸ | 8200292771 | •**735489** | 680 448 | ALM |
| 2.2 dCi 16V | JK0H | D | 2188 | G9T | M | | | 03/06 ▸ | 8200302463 | **732828** | 675 414,5 | ALM |
| 2.2 dCi 16V | JK0H | D | 2188 | G9T | A | | | 03/06 ▸ | 8200033729 | **734728** | 680 438 | ALB |

## FLUENCE

| | | | | | | | | | | | | |
|---|---|---|---|---|---|---|---|---|---|---|---|---|
| 2.0 i 140 16V | L30G | E | 1997 | M4R | M | | | 11/09 ▸ | 214100016R | **735182** | 652 390 | ALB |
| 2.0 i 140 16V | L30G | E | 1997 | M4R | A | | | 11/09 ▸ | 214100016R | **735182** | 652 390 | ALB |

## FUEGO

| | | | | | | | | | | | | |
|---|---|---|---|---|---|---|---|---|---|---|---|---|
| 1.4 | R136 | E | 1397 | 847 | M | - | TSW | 09/79 ▸ 1985 | 7700657109 | **810843** | 480 307 | ALB |
| 1.6 Turbo,1.6 i Turbo | R136 | E | 1565 | A5L,A7L | M | - | | 07/81 ▸ 06/85 | 7701349543 | | 420 326 | CBS |
| 1.6 | R136 | E | 1647 | A2M,A6M | M | + | | 09/79 ▸ 1985 | 7701349436 | | 540 300 | CBS |
| 1.6 | R136 | E | 1647 | A2M,A6M | M | - | TSW | 09/79 ▸ 1985 | 7700657109 | **810843** | 480 307 | ALB |
| 1.6 | R136 | E | 1647 | 843 | M | - | | 07/81 ▸ 06/83 | 7701349631 | | 420 326 | CBS |
| 1.6 | R136 | E | 1647 | A6M | A | + | | 09/79 ▸ 1985 | 7701349436 | | 540 300 | CBS |
| 1.6 | R136 | E | 1647 | A6M | A | - | TSW | 09/79 ▸ 1985 | 7700657109 | **810843** | 480 307 | ALB |
| 1.6 | R136 | E | 1647 | 843 | A | - | | 07/81 ▸ 06/83 | 7701349631 | | 420 326 | CBS |
| 2.0 | R136 | E | 1995 | 829 | M | + | TSW | 09/80 ▸ 1985 | 7700736827 | **810835** | 640 328 | ALB |
| 2.0 | R136 | E | 1995 | 829 | M | - | | 09/80 ▸ 1985 | 7701349631 | | 420 326 | CBS |
| 2.0 | 136B | E | 1995 | J7R | M | | | 09/84 ▸ 1985 | 7700759067 | | 480 307 | CBS |
| 2.0 | R136 | E | 1995 | J6R | A | + | TSW | 09/80 ▸ 1985 | 7700736827 | **810835** | 640 328 | ALB |
| 2.0 | R136 | E | 1995 | J6R | A | - | | 09/80 ▸ 1985 | 7701349631 | | 420 326 | CBS |
| 2.2 | R136 | E | 2165 | J7T | M | - | | 07/83 ▸ 06/85 | 7701349543 | | 420 326 | CBS |
| 2.2 Turbo | 136B | E | 2165 | J7T | M | | | 09/84 ▸ 1985 | 7700759067 | | 480 307 | CBS |
| 2.2 | R136 | E | 2165 | J7T | A | - | | 07/83 ▸ 06/85 | 7701349543 | | 420 326 | CBS |
| 2.2 | 136B | E | 2165 | J7T | A | | | 09/84 ▸ 1985 | 7700759067 | | 480 307 | CBS |
| 2.1 TD | 1366 | D | 2068 | J8S | M | - | | 09/82 ▸ 1984 | 7700725261 | | 640 326 | CBS |

## LAGUNA (94>98)

| | | | | | | | | | | | | |
|---|---|---|---|---|---|---|---|---|---|---|---|---|
| 1.8 i | B56/0/A/B/S/T/Z | E | 1794 | F3P | M | + | TSW | 01/94 ▸ 04/98 | 7701044076 | **731161** | 635 441 | CBS |
| 1.8 i | B56/0/A/B/S/T/Z | E | 1794 | F3P | M | - | TSW | 01/94 ▸ 04/98 | 7701038237 | **731128** | 560 414,5 | ALM |
| 2.0 i 16V | B56/D/M | E | 1948 | N7Q | M | + | TSW | 05/95 ▸ 04/98 | 7701044076 | **731161** | 635 441 | CBS |
| 2.0 i 16V | B56/D/M | E | 1948 | N7Q | M | - | TSW | 05/95 ▸ 04/98 | 7701038237 | **731128** | 560 414,5 | ALM |
| 2.0 i | B56/C/H/L/N | E | 1998 | F3R | M | + | TSW | 01/94 ▸ 04/98 | 7701044076 | **731161** | 635 441 | CBS |
| 2.0 i<br>980220 ▸ | B56L | E | 1998 | F3R | M | + | TSW | 02/98 ▸ 04/98 | 7701045345 | **732544** | 635 425 | ALB |
| 2.0 i | B56/C/H/L/N | E | 1998 | F3R | M | - | TSW | 01/94 ▸ 04/98 | 7701038237 | **731128** | 560 414,5 | ALM |
| 2.0 i | B56/C/H/L/N | E | 1998 | F3R | A | + | TSW | 01/94 ▸ 04/98 | 7701044076 | **731161** | 635 441 | CBS |
| 2.0 i<br>980220 ▸ | B56L | E | 1998 | F3R | A | + | TSW | 02/98 ▸ 04/98 | 7701045345 | **732544** | 635 425 | ALB |
| 2.0 i | B56/C/H/L/N | E | 1998 | F3R | A | - | TSW | 01/94 ▸ 04/98 | 7701038237 | **731128** | 560 414,5 | ALM |
| 2.0 i | B56N | E | 1998 | F3R | A | - | TSW | 01/96 ▸ 04/98 | 7701044076 | **731161** | 635 441 | CBS |
| 3.0 i V6 | B56V | E | 2946 | L7X | M | +/- | TSW | 05/97 ▸ 04/98 | 7701044076 | **731161** | 635 441 | CBS |
| 3.0 i V6 | B56V | E | 2946 | L7X | A | +/- | TSW | 07/97 ▸ 04/98 | 7701044076 | **731161** | 635 441 | CBS |
| 3.0 i V6 | B56E | E | 2963 | Z7X | M | +/- | TSW 820032 | 01/94 ▸ 12/96 | 7701038220 | **731162** | 634 438 | ALB |
| 3.0 i V6 | B56/5/R | E | 2963 | Z7X | A | +/- | TSW 820032 | 01/94 ▸ 04/98 | 7701038220 | **731162** | 634 438 | ALB |
| 2.2 D | B56/2/6/F/P | D | 2188 | G8T | M | +/- | TSW | 03/94 ▸ 04/98 | 7701044076 | **731161** | 635 441 | CBS |
| 2.2 Dt | B569 | D | 2188 | G8T | M | + | TSW 820032 | 03/96 ▸ 04/98 | 7701041957 | **731529** | 650 470 | ALB |
| 2.2 Dt | B569 | D | 2188 | G8T | M | + | TSW 820032 | 03/96 ▸ 04/98 | 7701040662 | **731129** | 650 442 | ALB |

## LAGUNA (98>2000)

| | | | | | | | | | | | | |
|---|---|---|---|---|---|---|---|---|---|---|---|---|
| 1.8 i GPL | B560 | G | 1794 | F3P | M | + | TSW | 05/98 ▸ 12/00 | 7701049754 | **732544** | 635 425 | ALB |
| 1.8 i GPL | B560 | G | 1794 | F3P | M | - | TSW | 05/98 ▸ 12/00 | 7701038237 | **731128** | 560 414,5 | ALM |
| 1.6 i 16V | B561 | E | 1598 | K4M | M | + | TSW | 05/98 ▸ 12/00 | 7701049754 | **732544** | 635 425 | ALB |
| 1.6 i 16V | | E | 1598 | K4M | M | - | TSW | 05/98 ▸ 12/00 | 7701038237 | **731128** | 560 414,5 | ALM |
| 1.8 i 16V | B56/3/4/Y | E | 1783 | F4P | M | + | TSW | 09/98 ▸ 12/00 | 7701045410 | **732544** | 635 425 | ALB |
| 1.8 i 16V | B56/3/4/Y | E | 1783 | F4P | M | - | TSW | 09/98 ▸ 12/00 | 7701038237 | **731128** | 560 414,5 | ALM |
| 1.8 i | B560 | E | 1794 | F3P | M | + | TSW | 09/99 ▸ 12/00 | 7701045345 | **732544** | 635 425 | ALB |
| 1.8 i | B560 | E | 1794 | F3P | M | - | TSW | 09/99 ▸ 12/00 | 7701038237 | **731128** | 560 414,5 | ALM |
| 2.0 i 16V | B56M | E | 1948 | N7Q | M | + | TSW | 05/98 ▸ 12/00 | 7701044076 | **731161** | 635 441 | CBS |

# RENAULT (.../...)

## LAGUNA (98>2000) (.../...)

| | | | CC | | | AC | | | OE | Valeo | DIM. | | TECH |
|---|---|---|---|---|---|---|---|---|---|---|---|---|---|
| 2.0 i 16V | B56M | E | 1948 | N7Q | M | - | TSW | 05/98 ▸ 12/00 | 7701038237 | 731128 | 560 | 414,5 | ALM |
| 2.0 i 16V | 556A | E | 1998 | F4R | M | +/- | TSW | 10/99 ▸ 12/00 | 7701044076 | 731161 | 635 | 441 | CBS |
| 2.0 i | B56L | E | 1998 | F3R | M | + | TSW | 05/98 ▸ 12/00 | 7701044076 | 731161 | 635 | 441 | CBS |
| 2.0 i | B56L | E | 1998 | F3R | M | + | TSW | 05/98 ▸ 12/00 | 7701045345 | 732544 | 635 | 425 | ALB |
| 2.0 i | B56L | E | 1998 | F3R | M | - | TSW | 05/98 ▸ 12/00 | 7701038237 | 731128 | 560 | 414,5 | ALM |
| 2.0 i | B56L | E | 1998 | F3R | M | - | TSW | 05/98 ▸ 12/00 | 7701044076 | 731161 | 635 | 441 | CBS |
| 2.0 i | B56/L/U | E | 1998 | F3R | A | + | TSW | 05/98 ▸ 12/00 | 7701044076 | 731161 | 635 | 441 | CBS |
| 2.0 i | B56/L/U | E | 1998 | F3R | A | + | TSW | 05/98 ▸ 12/00 | 7701045345 | 732544 | 635 | 425 | ALB |
| 2.0 i | B56/L/U | E | 1998 | F3R | A | - | TSW | 05/98 ▸ 12/00 | 7701038237 | 731128 | 560 | 414,5 | ALM |
| 3.0 i V6 | B56V | E | 2946 | L7X | M | + | TSW | 05/98 ▸ 12/00 | 7701044076 | 731161 | 635 | 441 | CBS |
| 3.0 i V6 | B56V | E | 2946 | L7X | A | + | TSW | 05/98 ▸ 12/00 | 7701044076 | 731161 | 635 | 441 | CBS |
| 1.9 dCi | B56W | D | 1870 | F9Q | M | +/- | TSW | 09/99 ▸ 12/00 | 7701049754 | 732544 | 635 | 425 | ALB |
| 1.9 dCi,1.9 dTi | B56/J/W | D | 1870 | F9Q | M | + | TSW | 05/98 ▸ 12/00 | 7701045345 | 732544 | 635 | 425 | ALB |
| 1.9 dTi | B56J | D | 1870 | F9Q | M | + | TSW | 05/98 ▸ 12/00 | 7701049754 | 732544 | 635 | 425 | ALB |
| 1.9 dTi | B56J | D | 1870 | F9Q | A | + | TSW | 07/99 ▸ 12/00 | 7701049754 | 732544 | 635 | 425 | ALB |
| 2.2 dT | B569 | D | 2188 | G8T | M | + | TSW 820032 | 05/98 ▸ 12/00 | 7701041957 | 731529 | 650 | 470 | ALB |
| 2.2 dT | B569 | D | 2188 | G8T | M | - | TSW 820032 | 05/98 ▸ 12/00 | 7701040662 | 731129 | 650 | 442 | ALB |

## LAGUNA NEVADA (95>98)

| | | | | | | | | | | | | | |
|---|---|---|---|---|---|---|---|---|---|---|---|---|---|
| 1.8 i | K56/0/S/T/Z | E | 1794 | F3P | M | + | TSW | 07/95 ▸ 04/98 | 7701044076 | 731161 | 635 | 441 | CBS |
| 1.8 i | K56/0/T | E | 1794 | F3P | M | + | TSW | 02/98 ▸ 04/98 | 7701049754 | 732544 | 635 | 425 | ALB |
| 1.8 i | K56/0/S/T/Z | E | 1794 | F3P | M | - | TSW | 07/95 ▸ 04/98 | 7701038237 | 731128 | 560 | 414,5 | ALM |
| 2.0 i 16V | K56/D/M | E | 1948 | N7Q | M | + | TSW | 07/95 ▸ 04/98 | 7701044076 | 731161 | 635 | 441 | CBS |
| 2.0 i 16V | K56/D/M | E | 1948 | N7Q | M | - | TSW | 07/95 ▸ 04/98 | 7701038237 | 731128 | 560 | 414,5 | ALM |
| 2.0 i | K56/C/H/L | E | 1998 | F3R | M | +/- | TSW | 07/95 ▸ 02/98 | 7701044076 | 731161 | 635 | 441 | CBS |
| 2.0 i | K56/L/N | E | 1998 | F3R | M | + | TSW | 02/98 ▸ 04/98 | 7701045345 | 732544 | 635 | 425 | ALB |
| 2.0 i | K56/C/H/L/N | E | 1998 | F3R | M | - | TSW | 07/95 ▸ 04/98 | 7701038237 | 731128 | 560 | 414,5 | ALM |
| 2.0 i | K56N | E | 1998 | F3R | M | - | TSW | 02/96 ▸ 02/98 | 7701044076 | 731161 | 635 | 441 | CBS |
| 2.0 i | K56/C/H/L/N | E | 1998 | F3R | A | +/- | TSW | 07/95 ▸ 04/98 | 7701044076 | 731161 | 635 | 441 | CBS |
| 2.0 i | K56/L/N | E | 1998 | F3R | A | + | TSW | 02/98 ▸ 04/98 | 7701045410 | 732544 | 635 | 425 | ALB |
| 2.0 i | K56N | E | 1998 | F3R | A | + | TSW | 02/98 ▸ 04/98 | 7701049754 | 732544 | 635 | 425 | ALB |
| 2.0 i | K56/C/H/L/N | E | 1998 | F3R | A | - | TSW | 07/95 ▸ 04/98 | 7701038237 | 731128 | 560 | 414,5 | ALM |
| 3.0 i V6 | K56V | E | 2946 | L7X | M | +/- | TSW | 05/97 ▸ 04/98 | 7701044076 | 731161 | 635 | 441 | CBS |
| 3.0 i V6 | K56V | E | 2946 | L7X | A | +/- | TSW | 07/97 ▸ 04/98 | 7701044076 | 731161 | 635 | 441 | CBS |
| 3.0 i V6 | K56/5/R | E | 2963 | Z7X | A | +/- | TSW 820032 | 02/96 ▸ 04/98 | 7701038220 | 731162 | 634 | 438 | ALB |
| 2.2 D | K56/2/6/F ; S56/6/F | D | 2188 | G8T | M | +/- | TSW | 07/95 ▸ 04/98 | 7701044076 | 731161 | 635 | 441 | CBS |
| 2.2 D | S56/6/F | D | 2188 | G8T | M | + | TSW | 07/95 ▸ 04/98 | 7701045345 | 732544 | 635 | 425 | ALB |
| 2.2 dT | K569 | D | 2188 | G8T | M | + | TSW 820032 | 03/96 ▸ 04/98 | 7701041957 | 731529 | 650 | 470 | ALB |
| 2.2 dT | K569 | D | 2188 | G8T | M | + | TSW 820032 | 03/96 ▸ 04/98 | 7701040662 | 731129 | 650 | 442 | ALB |

## LAGUNA NEVADA (98>2000)

| | | | | | | | | | | | | | |
|---|---|---|---|---|---|---|---|---|---|---|---|---|---|
| 1.8 i GPL | K560 | G | 1794 | F3P | M | + | TSW | 05/98 ▸ 12/00 | 7701044076 | 731161 | 635 | 441 | CBS |
| 1.8 i GPL | K560 | G | 1794 | F3P | M | - | TSW | 05/98 ▸ 12/00 | 7701038237 | 731128 | 560 | 414,5 | ALM |
| 1.8 i GPL | K560 | G | 1794 | F3P | M | | TSW | 05/98 ▸ 12/00 | 7701049754 | 732544 | 635 | 425 | ALB |
| 1.6 i 16V | K56/1/8 | E | 1598 | K4M | M | + | TSW | 05/98 ▸ 12/00 | 7701045410 | 732544 | 635 | 425 | ALB |
| 1.6 i 16V | K56/1/8 | E | 1598 | K4M | M | - | TSW | 05/98 ▸ 12/00 | 7701038237 | 731128 | 560 | 414,5 | ALM |
| 1.6 i 16V | K56/1/8 | E | 1598 | K4M | M | | TSW | 05/98 ▸ 12/00 | 7701049754 | 732544 | 635 | 425 | ALB |
| 1.8 i 16V | K56/3/4/Y | E | 1783 | F4P | M | + | TSW | 05/98 ▸ 12/00 | 7701045410 | 732544 | 635 | 425 | ALB |
| 1.8 i 16V | K56/3/4/Y | E | 1783 | F4P | M | - | TSW | 05/98 ▸ 12/00 | 7701038237 | 731128 | 560 | 414,5 | ALM |
| 1.8 i 16V | K56/3/4/Y | E | 1783 | F4P | M | | TSW | 05/98 ▸ 12/00 | 7701049754 | 732544 | 635 | 425 | ALB |
| 1.8 i | K560 | E | 1794 | F3P | M | + | TSW | 05/99 ▸ 12/00 | 7701044076 | 731161 | 635 | 441 | CBS |
| 1.8 i | K560 | E | 1794 | F3P | M | - | TSW | 05/99 ▸ 12/00 | 7701038237 | 731128 | 560 | 414,5 | ALM |
| 1.8 i | K560 | E | 1794 | F3P | M | | TSW | 05/99 ▸ 12/00 | 7701049754 | 732544 | 635 | 425 | ALB |
| 2.0 i 16V | K56M | E | 1948 | N7Q | M | + | TSW | 05/98 ▸ 12/00 | 7701044076 | 731161 | 635 | 441 | CBS |
| 2.0 i 16V | K56M | E | 1948 | N7Q | M | - | TSW | 05/98 ▸ 12/00 | 7701038237 | 731128 | 560 | 414,5 | ALM |
| 2.0 i | K56L | E | 1998 | F3R | M | + | TSW | 05/98 ▸ 12/00 | 7701045345 | 732544 | 635 | 425 | ALB |
| 2.0 i | K56L | E | 1998 | F3R | M | - | TSW | 05/98 ▸ 12/00 | 7701044076 | 731161 | 635 | 441 | CBS |
| 2.0 i | K56L | E | 1998 | F3R | M | - | TSW | 05/98 ▸ 12/00 | 7701038237 | 731128 | 560 | 414,5 | ALM |
| 2.0 i,2.0 i 16V | A56A ; K56L | E | 1998 | F3R,F4R | M | | TSW | 05/98 ▸ 12/00 | 7701049754 | 732544 | 635 | 425 | ALB |
| 2.0 i | K56L | E | 1998 | F3R | A | + | TSW | 05/98 ▸ 12/00 | 7701045345 | 732544 | 635 | 425 | ALB |
| 2.0 i | K56L | E | 1998 | F3R | A | - | TSW | 05/98 ▸ 12/00 | 7701044076 | 731161 | 635 | 441 | CBS |
| 2.0 i | K56L | E | 1998 | F3R | A | - | TSW | 05/98 ▸ 12/00 | 7701038237 | 731128 | 560 | 414,5 | ALM |
| 2.0 i | K56L | E | 1998 | F3R | A | | TSW | 05/98 ▸ 12/00 | 7701049754 | 732544 | 635 | 425 | ALB |
| 3.0 i V6 | K56V | E | 2946 | L7X | M | + | TSW | 05/98 ▸ 12/00 | 7701044076 | 731161 | 635 | 441 | CBS |
| 3.0 i V6 | K56V | E | 2946 | L7X | A | + | TSW | 05/98 ▸ 12/00 | 7701044076 | 731161 | 635 | 441 | CBS |
| 1.9 dCi,1.9 dTi | S56J ; K56/J/W | D | 1870 | F9Q | M | +/- | TSW | 05/98 ▸ 12/00 | 7701045345 | 732544 | 635 | 425 | ALB |
| 1.9 dTi | K56J | D | 1870 | F9Q | A | +/- | TSW | 09/99 ▸ 12/00 | 7701049754 | 732544 | 635 | 425 | ALB |
| 2.2 dT | K569 | D | 2188 | G8T | M | + | TSW 820032 | 05/98 ▸ 12/00 | 7701041957 | 731529 | 650 | 470 | ALB |

Radiator Radiateur Motorkühler Radiatore di raffreddamento Radiator Radyatör Radiator Радиатор Radiador vízhűtő Vodní chladič Radiator Ψυγείο



• **New** Nouveau **Nuevo** Novo **Nuovo** Nieuw **Neu** Nowość **Yeni** Новый Νέο **Nový**

## LAGUNA NEVADA (98>2000) (.../...)

| Type Ctr. | | CC | | | AC | | | OE | Valeo | DIM. | TECH |
|---|---|---|---|---|---|---|---|---|---|---|---|
| 2.2 dT K569 | D | 2188 | G8T | M | - | TSW 820032 | 05/98 ▸ 12/00 | 7701040662 | **731129** | 650 442 | ALB |

## LAGUNA II (2001>)

| | | | | | | | | | | | |
|---|---|---|---|---|---|---|---|---|---|---|---|
| 1.6 i GPL 16V KG0L | F | 1598 | K4M | M | + | | 01/01 ▸ 02/05 | 8200008764 | **732827** | 670 414,5 | ALM |
| 1.6 i GPL 16V BG0L | F | 1598 | K4M | M | | | 01/01 ▸ 02/05 | 8200008764 | **732827** | 670 414,5 | ALM |
| 1.6 i 16V KG0/A/L/U | E | 1598 | K4M | M | + | | 01/01 ▸ 02/05 | 8200008764 | **732827** | 670 414,5 | ALM |
| 1.6 i 16V BG0/A/L/U | E | 1598 | K4M | M | | | 01/01 ▸ 02/05 | 8200008764 | **732827** | 670 414,5 | ALM |
| 1.6 i 16V KG0/A/U | E | 1598 | K4M | A | + | | 01/01 ▸ 02/05 | 8200008764 | **732827** | 670 414,5 | ALM |
| 1.6 i 16V BG0/A/U | E | 1598 | K4M | A | | | 01/01 ▸ 02/05 | 8200008764 | **732827** | 670 414,5 | ALM |
| 1.8 i 16V KG0/B/C/J/M/V | E | 1783 | F4P | M | + | | 01/01 ▸ 02/05 | 8200008764 | **732827** | 670 414,5 | ALM |
| 1.8 i 16V KG04 ; BG0/4/B/C/J/M/V | E | 1783 | F4P | M | | | 01/01 ▸ 02/05 | 8200008764 | **732827** | 670 414,5 | ALM |
| 1.8 i 16V KG0J | E | 1783 | F4P | A | + | | 01/01 ▸ 02/05 | 8200008764 | **732827** | 670 414,5 | ALM |
| 1.8 i 16V BG0/6/J | E | 1783 | F4P | A | | | 01/01 ▸ 02/05 | 8200008764 | **732827** | 670 414,5 | ALM |
| 2.0 i 16V,2.0 ide 16V KG0/0/N/W | E | 1998 | F4R,F5R | M | + | | 01/01 ▸ 02/05 | 8200008764 | **732827** | 670 414,5 | ALM |
| 2.0 i Turbo 16V BG0S ; KG0S | E | 1998 | F4R | M | + | | 03/03 ▸ 02/05 | 8200302463 | **732828** | 675 414,5 | ALM |
| 2.0 i 16V,2.0 i Turbo 16V 2.0 ide 16V BG0/0/K/N/S/W ; KG0/K/S | E | 1998 | F4R,F5R | M | | | 01/01 ▸ 02/05 | 8200008764 | **732827** | 670 414,5 | ALM |
| 2.0 i 16V,2.0 ide 16V KG0/N/W | E | 1998 | F4R,F5R | A | + | | 01/01 ▸ 02/05 | 8200008764 | **732827** | 670 414,5 | ALM |
| 2.0 i Turbo 16V BG0S ; KG0S | E | 1998 | F4R | A | + | | 03/03 ▸ 02/05 | 8200302463 | **732828** | 675 414,5 | ALM |
| 2.0 i 16V,2.0 i Turbo 16V 2.0 ide 16V BG0/K/N/S/W ; KG0/KS | E | 1998 | F4R,F5R | A | | | 01/01 ▸ 02/05 | 8200008764 | **732827** | 670 414,5 | ALM |
| 3.0 i V6 24V KG0/1/D/Y | E | 2946 | L7X | A | + | | 01/01 ▸ 02/05 | 8200008766 | | 680 398 | ALB |
| 3.0 i V6 24V BG0/1/D/Y | E | 2946 | L7X | A | | | 01/01 ▸ 02/05 | 8200008766 | | 680 398 | ALB |
| 1.9 dCi KG0/E/G/R | D | 1870 | F9Q | M | + | | 01/01 ▸ 02/05 | 8200008764 | **732827** | 670 414,5 | ALM |
| 1.9 dCi KG0G ; BG0/E/G/R | D | 1870 | F9Q | M | | | 01/01 ▸ 02/05 | 8200008764 | **732827** | 670 414,5 | ALM |
| 1.9 dCi KG0E | D | 1870 | F9Q | A | + | | 01/01 ▸ 02/05 | 8200008764 | **732827** | 670 414,5 | ALM |
| 1.9 dCi BG0E | D | 1870 | F9Q | A | | | 01/01 ▸ 02/05 | 8200008764 | **732827** | 670 414,5 | ALM |
| 1.9 dCi BG0E ; KG0E | D | 1870 | F9Q | A | | | 01/01 ▸ 02/05 | 8200302463 | **732828** | 675 414,5 | ALM |
| 2.2 dCi 16V KG0F | D | 2188 | G9T | M | + | | 01/01 ▸ 02/05 | 8200302463 | **732828** | 675 414,5 | ALM |
| 2.2 dCi 16V KG0F | D | 2188 | G9T | M | + | | 01/01 ▸ | 8200008765 | **732828** | 675 414,5 | ALM |
| 2.2 dCi 16V BG0F | D | 2188 | G9T | M | | | 01/01 ▸ 02/05 | 8200302463 | **732828** | 675 414,5 | ALM |
| 2.2 dCi 16V BG0F | D | 2188 | G9T | M | | | 01/01 ▸ | 8200008765 | **732828** | 675 414,5 | ALM |
| 2.2 dCi 16V BG0F | D | 2188 | G9T | A | | | 01/01 ▸ 02/05 | 8200302463 | **732828** | 675 414,5 | ALM |
| 2.2 dCi 16V BG0F | D | 2188 | G9T | A | | | 01/01 ▸ | 8200008765 | **732828** | 675 414,5 | ALM |

## LAGUNA II (2005>)

| | | | | | | | | | | | |
|---|---|---|---|---|---|---|---|---|---|---|---|
| 1.6 i GPL 16V BG0L ; KG0L | F | 1598 | K4M | M | + | | 03/05 ▸ 09/07 | 8200008764 | **732827** | 670 414,5 | ALM |
| 1.6 i 16V BG0/A/L/U ; BG1/G/H KG0/A/L/U ; KG1/G/H | E | 1598 | K4M | M | + | | 03/05 ▸ 09/07 | 8200008764 | **732827** | 670 414,5 | ALM |
| 1.8 i 16V BG0/4/B/C/J/M/V KG0/4/B/C/J/M/V | E | 1783 | F4P | M | + | | 03/05 ▸ 09/07 | 8200008764 | **732827** | 670 414,5 | ALM |
| 1.8 i 16V BG0/6/J/M ; KG0/6/JM | E | 1783 | F4P | A | + | | 03/05 ▸ 09/07 | 8200008764 | **732827** | 670 414,5 | ALM |
| 2.0 i Turbo 16V BG0/S/T/Z ; BG1/L/M KG0/S/T/Z | E | 1998 | F4R | M | + | | 03/05 ▸ 09/07 | 8200302463 | **732828** | 675 414,5 | ALM |
| 2.0 i 16V,2.0 i Turbo 16V BG0/0/3/K/N/P/S/T/WZ ; BG1/L/M/Y ; KG0/0/3/K/N/P/S/T/W/Z ; KG1L/Y | E | 1998 | F4R,F5R | M | + | | 03/05 ▸ 09/07 | 8200008764 | **732827** | 670 414,5 | ALM |
| 2.0 i Turbo 16V BG0Z ; KG0Z | E | 1998 | F4R | M | | | 03/05 ▸ 09/07 | 8200302463 | **732828** | 675 414,5 | ALM |
| 2.0 i Turbo 16V BG0/3/S/Z ; BG1/L/MY ; KG1Y ; KG0/3/S/Z | E | 1998 | F4R | A | + | | 03/05 ▸ 09/07 | 8200302463 | **732828** | 675 414,5 | ALM |
| 2.0 i 16V,2.0 i Turbo 16V BG0/0/3/K/N/P/S/W/Z BG1/L/M/Y ; KG1Y ; KG0/0/3/K/N/P/S/W/Z | E | 1998 | F4R,F5R | A | + | | 03/05 ▸ 09/07 | 8200008764 | **732827** | 670 414,5 | ALM |
| 3.0 i V6 24V BG1K ; BG0/1/2/D/Y KG1K ; KG0/1/2/D/Y | E | 2946 | L7X | A | + | | 03/05 ▸ 09/07 | 8200008766 | | 680 398 | ALB |
| 1.9 dCi BG1/2/3/A/V ; KG1/23/A/V | D | 1870 | F9Q | M | + | | 03/05 ▸ 09/07 | 8200292771 | •**735489** | 680 448 | ALM |
| 1.9 dCi BG0/5/8/E/G/R ; BG10/2/3/A/V/W ; KG0/5/8/E/G/R ; KG1/0/2/3/A/VW | D | 1870 | F9Q | M | + | | 03/05 ▸ 09/07 | 8200008764 | **732827** | 670 414,5 | ALM |
| 1.9 dCi BG1/2/V ; KG1/2/V | D | 1870 | F9Q | A | | | 03/05 ▸ 09/07 | 8200292771 | •**735489** | 680 448 | ALM |
| 2.0 dCi 16V BG1/4/S ; KG1/4/S | D | 1995 | M9R | M | + | | 07/05 ▸ 09/07 | 8200008766 | | 680 398 | ALB |
| 2.0 dCi BG1T ; KG1T | D | 1995 | M9R | M | + | | 07/05 ▸ 09/07 | 8200292771 | •**735489** | 680 448 | ALM |
| 2.0 dCi 16V BG1/4/S ; KG1/4/S | D | 1995 | M9R | M | | | 07/05 ▸ 09/07 | 8200292771 | •**735489** | 680 448 | ALM |
| 2.2 dCi 16V BG0/9/F ; KG0/9/F | D | 2188 | G9T | M | +/- | | 03/05 ▸ 09/07 | 8200302463 | **732828** | 675 414,5 | ALM |
| 2.2 dCi 16V BG09 ; KG09 | D | 2188 | G9T | M | + | | 03/05 ▸ 09/07 | 8200292771 | •**735489** | 680 448 | ALM |
| 2.2 dCi BG0F ; KG0F | D | 2188 | G9T | M | + | | 03/05 ▸ 09/07 | 8200302463 | **732828** | 675 414,5 | ALM |
| 2.2 dCi 16V BG1N ; KG1N | D | 2188 | G9T | M | | | 12/05 ▸ 09/07 | 8200292771 | •**735489** | 680 448 | ALM |
| 2.2 dCi 16V BG0F ; KG0F | D | 2188 | G9T | A | +/- | | 03/05 ▸ 09/07 | 8200302463 | **732828** | 675 414,5 | ALM |

# RENAULT (.../...)

## LAGUNA II (2005>) (.../...)

| | | | CC | | | AC | | | OE | Valeo | DIM. | TECH |
|---|---|---|---|---|---|---|---|---|---|---|---|---|
| 2.2 dCi | BG0F ; KG0F | D | 2188 | G9T | A | + | | 03/05 ▸ 09/07 | 8200302463 | **732828** | 675 414,5 | ALM |

## LUTECIA (JAP)

| | | | | | | | | | | | | |
|---|---|---|---|---|---|---|---|---|---|---|---|---|
| 1.4 i | B57B ; C57B | E | 1390 | E7J | M | + | TSW 819745 | 03/96 ▸ 02/98 | 7700806575 | **730181** | 432 399 | CBS |
| 1.4 i | B57B ; C57B | E | 1390 | E7J | M | - | TSW | 03/96 ▸ 02/98 | 7701034770 | **816657** | 390 377,5 | ALM |
| 1.4 i | B57B ; C57B | E | 1390 | E7J | M | | TSW | 03/96 ▸ 02/98 | 7701047886 | **816658** | 430 377,5 | ALM |
| 1.8 i | 357A ; 557A | E | 1794 | F3P | A | + | TSW | 10/94 ▸ 02/98 | 7700806576 | **730182** | 432 399 | CBS |
| 1.8 i | 357A | E | 1794 | F3P | A | - | TSW | 10/94 ▸ 02/98 | 7701034769 | **883875** | 430 377,5 | ALM |
| 1.8 i | 557A | E | 1794 | F3P | A | | TSW | 10/94 ▸ 02/98 | 7701034769 | **883875** | 430 377,5 | ALM |

## MEGANE (95>99)

| | | | | | | | | | | | | |
|---|---|---|---|---|---|---|---|---|---|---|---|---|
| 1.4 i,1.4 i 16V | BA0E ; DA0W | E | 1390 | E7J,K4J | M | + | TSW | 11/95 ▸ 02/99 | 7700838133 | **731380** | 585 397,5 | ALB |
| 1.4 i,1.4 i 16V | BA0E ; DA0W | E | 1390 | E7J,K4J | M | + | TSW | 05/98 ▸ 02/99 | 7700425842 | **732316** | 585 414,5 | ALM |
| 1.4 i,1.4 i 16V | BA0E ; DA0W | E | 1390 | E7J,K4J | M | - | TSW | 11/95 ▸ 02/99 | 7700838134 | **731378** | 430 377,5 | ALM |
| 1.4 i 16V | DA0W | E | 1390 | K4J | M | - | TSW | 09/98 ▸ 02/99 | 7700838135 | **731379** | 570 377,5 | ALM |
| 1.4 i | BA0T | E | 1390 | E7J | M | | TSW | 11/95 ▸ 12/98 | 7700838134 | **731378** | 430 377,5 | ALM |
| 1.6 i | DA0F ; BA0/F/L/S | E | 1598 | K7M | M | + | TSW | 11/95 ▸ 10/98 | 7701352605 | **731380** | 585 397,5 | ALB |
| 1.6 i,1.6 i 16V | BA0/F/L/S ; DA0/4/F | E | 1598 | K4M,K7M | M | + | TSW | 07/97 ▸ 02/99 | 7700425842 | **732316** | 585 414,5 | ALM |
| 1.6 i,1.6 i 16V | BA0/F/L/S ; EA0F DA0/4/F | E | 1598 | K4M,K7M | M | - | TSW | 11/95 ▸ 02/99 | 7700838134 | **731378** | 430 377,5 | ALM |
| 1.6 i | BA0F ; DA0F | E | 1598 | K7M | A | + | TSW | 11/95 ▸ 06/98 | 7701352605 | **731380** | 585 397,5 | ALB |
| 1.6 i,1.6 i 16V | BA0/F ; DA0/4/F | E | 1598 | K4M,K7M | A | + | TSW | 11/95 ▸ 02/99 | 7700425842 | **732316** | 585 414,5 | ALM |
| 1.6 i,1.6 i 16V | BA0/F ; DA0/4/F | E | 1598 | K4M,K7M | A | - | TSW | 11/95 ▸ 02/99 | 7700838135 | **731379** | 570 377,5 | ALM |
| 2.0 i,2.0 i 16V | BA0/7/G/H ; DA0/G/H EA0/G/H | E | 1998 | F3R,F7R | M | + | TSW | 11/95 ▸ 02/99 | 7700425842 | **732316** | 585 414,5 | ALM |
| 2.0 i,2.0 i 16V | BA0/7/G/H ; DA0/G/H EA0/G/H | E | 1998 | F3R,F7R | M | + | TSW | 11/95 ▸ 06/98 | 7700838133 | **731380** | 585 397,5 | ALB |
| 2.0 i | DA0G | E | 1998 | F3R | M | - | TSW | 11/95 ▸ 06/97 | 7700838134 | **731378** | 430 377,5 | ALM |
| 2.0 i,2.0 i 16V | BA0/7/G/H ; DA0/G/H EA0/G/H | E | 1998 | F3R,F7R | M | - | TSW | 11/95 ▸ 02/99 | 7700838135 | **731379** | 570 377,5 | ALM |
| 2.0 ide 16V | DA03 | E | 1998 | F5R | M | - | TSW | 10/98 ▸ 02/99 | 7700425842 | **732316** | 585 414,5 | ALM |
| 2.0 i 16V | BA0H | E | 1998 | F7R | M | | TSW | 02/96 ▸ 12/98 | 7700838135 | **731379** | 570 377,5 | ALM |
| 2.0 i | DA0G ; EA0G ; BA0/7/G | E | 1998 | F3R | A | + | TSW | 11/95 ▸ 02/99 | 7700425842 | **732316** | 585 414,5 | ALM |
| 2.0 i | DA0G ; EA0G ; BA0/7/G | E | 1998 | F3R | A | + | TSW | 11/95 ▸ 05/98 | 7700838133 | **731380** | 585 397,5 | ALB |
| 2.0 i | DA0G ; EA0G ; BA0/7/G | E | 1998 | F3R | A | - | TSW | 11/95 ▸ 02/99 | 7700838135 | **731379** | 570 377,5 | ALM |
| 2.0 i | DA0G | E | 1998 | F3R | A | - | TSW | 11/95 ▸ 02/99 | 7700838134 | **731378** | 430 377,5 | ALM |
| 1.9 D,1.9 dTi | DA0N ; BA0/A/N | D | 1870 | F8Q,F9Q | M | + | TSW | 11/95 ▸ 02/99 | 7700425842 | **732316** | 585 414,5 | ALM |
| 1.9 dTi | DA0N ; SA0N ; BA0/8 N | D | 1870 | F9Q | M | + | TSW | 07/96 ▸ 02/99 | 7700838133 | **731380** | 585 397,5 | ALB |
| 1.9 dTi | DA0N ; SA0N ; BA0/8 N | D | 1870 | F9Q | M | - | TSW | 07/96 ▸ 02/99 | 7700838135 | **731379** | 570 377,5 | ALM |
| 1.9 D,1.9 dT | BA0/9/A/K/U/Y ; SA0 9/A/U/Y | D | 1870 | F8Q | M | | TSW | 11/95 ▸ 02/99 | 7700838133 | **731380** | 585 397,5 | ALB |
| 1.9 dTi | BA0N ; DA0N | D | 1870 | F9Q | A | + | TSW | 11/95 ▸ 02/99 | 7700838133 | **731380** | 585 397,5 | ALB |
| 1.9 dTi | DA0N | D | 1870 | F9Q | A | - | TSW | 11/95 ▸ 06/97 | 7700838134 | **731378** | 430 377,5 | ALM |
| 1.9 dTi | BA0N | D | 1870 | F9Q | A | - | TSW | 04/97 ▸ 02/99 | 7700838135 | **731379** | 570 377,5 | ALM |

## MEGANE (98>)

| | | | | | | | | | | | | |
|---|---|---|---|---|---|---|---|---|---|---|---|---|
| 1.4 i,1.4 i 16V | BA0/D/V/W ; BA1/0/H DA0/D/W ; DA1/0/H ; EA1H ; EA0/D/W ; KA0/D V/W ; KA1/0/H | E | 1390 | E7J,K4J | M | + | TSW | 10/98 ▸ 01/02 | 7700425842 | **732316** | 585 414,5 | ALM |
| 1.4 i 16V | BA0/D ; DA0D ; DA1H EA0D ; EA1H ; BA1/0/H ; KA0/D/W ; KA1/0/H | E | 1390 | K4J | M | + | TSW | 10/98 ▸ 02/03 | 8200189286 | **732866** | 585 414,5 | ALM |
| 1.4 i,1.4 i 16V | BA0/D/V/W ; BA1/0/H DA0/D/W ; DA1/0/H ; EA1H ; EA0/D/W ; KA0/D V/W ; KA1/0/H | E | 1390 | E7J,K4J | M | - | TSW | 10/98 ▸ 02/03 | 7700838134 | **731378** | 430 377,5 | ALM |
| 1.6 i,1.6 i 16V | BA0/0/4/B/F/S ; BA1 1/C/J/K ; DA0/4/B ; DA1/1/J ; EA0/4/B ; EA1 1/J ; KA0/4/B/F ; KA1/1/J | E | 1598 | K4M,K7M | M | + | TSW | 10/98 ▸ 01/02 | 7700425842 | **732316** | 585 414,5 | ALM |
| 1.6 i 16V | BA0/B ; DA0B ; BA1/1 J ; EA0B ; DA1/1/J ; EA1/1/J ; KA0/4/B ; KA1 1/J | E | 1598 | K4M | M | + | TSW | 10/98 ▸ 02/03 | 8200189286 | **732866** | 585 414,5 | ALM |
| 1.6 i | KA0F | E | 1598 | K7M | M | + | TSW | 01/99 ▸ 10/98 | 7700838133 | **731380** | 585 397,5 | ALB |
| 1.6 i,1.6 i 16V | BA0/0/4/B/F/S ; BA1 1/C/J/K ; DA0/4/B ; DA1/1/J ; EA0/4/B ; EA1 1/J ; KA0/4/B/F ; KA1/1/J | E | 1598 | K4M,K7M | M | - | TSW | 10/98 ▸ 02/03 | 7700838134 | **731378** | 430 377,5 | ALM |
| 1.6 i,1.6 i 16V | BA0/4/B/F ; BA1/1/J DA0/4/B ; EA0B ; DA1/1/J ; EA1/1/J ; KA11 KA0/4/B | E | 1598 | K4M,K7M | A | + | TSW | 10/98 ▸ 01/02 | 7700425842 | **732316** | 585 414,5 | ALM |

Radiator Ψυγείο Vodní chladič Radiator vízhűtő Радиатор Radiador Radiator Radyatör Radiator Radiatore di raffreddamento Motorkühler Radiateur Radiator



• **New** Nouveau **Nuevo** Novo **Nuovo** Nieuw **Neu** Nowość **Yeni** Новый Νέο **Novy**

## MEGANE (98>) (.../...)

| | | | | | | | | | | | | | |
|---|---|---|---|---|---|---|---|---|---|---|---|---|---|
| 1.6 i 16V | BA0/B ; DA0B ; BA1/1 J ; EA0B ; DA1/1/J ; EA1/1/J ; KA11 ; KA0/4 B | E | 1598 | K4M | A | + | TSW | 10/98 ▸ 02/03 | 8200189286 | **732866** | 585 | 414,5 | ALM |
| 1.6 i,1.6 i 16V | BA0/4/B/F ; BA1/1/J DA0/4/B ; EA0B ; DA1/1/J ; EA1/1/J ; KA11 KA0/4/B | E | 1598 | K4M,K7M | A | - | TSW | 10/98 ▸ 02/03 | 7700838135 | **731379** | 570 | 377,5 | ALM |
| 1.8 i 16V | BA1/2/A/M/R ; KA1/2 A/R | E | 1783 | F4P | M | +/- | TSW | 10/99 ▸ 01/02 | 7700425842 | **732316** | 585 | 414,5 | ALM |
| 1.8 i 16V | BA1/R ; KA1/A/R | E | 1783 | F4P | M | + | TSW | 06/00 ▸ 02/03 | 8200189286 | **732866** | 585 | 414,5 | ALM |
| 2.0 ide 16V | DA0/3/P ; EA0/3/P | E | 1998 | F5R | M | +/- | TSW | 02/99 ▸ 12/01 | 7700425842 | **732316** | 585 | 414,5 | ALM |
| 2.0 i 16V | EA13 | E | 1998 | F4R | M | +/- | TSW | 02/02 ▸ 02/03 | 8200189286 | **732866** | 585 | 414,5 | ALM |
| 2.0 i,2.0 i 16V | BA1D ; BA0/7/G ; DA0 C/G/H ; DA1/3/S ; EA0/C/G ; EA1/3/S | E | 1998 | F3R,F4R,F7R | M | + | TSW | 02/99 ▸ 02/03 | 7700425842 | **732316** | 585 | 414,5 | ALM |
| 2.0 i 16V | EA0C ; EA1S ; DA1/3 S | E | 1998 | F4R | M | + | TSW | 10/01 ▸ 02/03 | 8200189286 | **732866** | 585 | 414,5 | ALM |
| 2.0 i,2.0 i 16V | BA0/7/G ; EA0G ; DA0 G/H | E | 1998 | F3R,F7R | M | - | TSW | 02/99 ▸ 02/03 | 7700838135 | **731379** | 570 | 377,5 | ALM |
| 2.0 i | DA0G ; EA0G ; BA0/G | E | 1998 | F3R | A | + | TSW | 03/99 ▸ 02/03 | 7700425842 | **732316** | 585 | 414,5 | ALM |
| 2.0 i | DA0G ; EA0G ; BA0/G | E | 1998 | F3R | A | - | TSW | 03/99 ▸ 02/03 | 7700838135 | **731379** | 570 | 377,5 | ALM |
| 1.9 dCi,1.9 dTi | BA1U ; DA05 ; BA0/5 KA1U ; SA05 ; SA1U ; KA0/5/N | D | 1870 | F9Q | M | + | TSW | 10/98 ▸ 02/03 | 8200189288 | **732817** | 585 | 414,5 | ALM |
| 1.9 dTi | DA0N ; KA0N ; SA0N BA0/N | D | 1870 | F9Q | M | + | TSW | 10/98 ▸ 02/03 | 7700425842 | **732316** | 585 | 414,5 | ALM |
| 1.9 D,1.9 dCi,1.9 dTi | BA0/5/N/R ; BA1/F/U DA0/5/N ; KA1U ; KA0/5/J/N ; SA1U ; SA0/5/N R | D | 1870 | F8Q,F9Q | M | + | TSW | 10/98 ▸ 01/02 | 7700429769 | **732559** | 585 | 377,5 | ALM |
| 1.9 dCi,1.9 dTi | BA0/5/N ; BA1/F/U DA0/5/N ; KA1U ; KA0/5/N ; SA1U ; SA0/5/N | D | 1870 | F9Q | M | - | TSW | 10/98 ▸ 02/03 | 7700838135 | **731379** | 570 | 377,5 | ALM |
| 1.9 D | SA0R | D | 1870 | F8Q | M | | TSW | 01/02 ▸ 08/02 | 8200189288 | **732817** | 585 | 414,5 | ALM |
| 1.9 dTi | DA0N ; KA0N ; BA0/N | D | 1870 | F9Q | A | + | TSW | 10/98 ▸ 02/03 | 7700425842 | **732316** | 585 | 414,5 | ALM |
| 1.9 dCi,1.9 dTi | DA05 ; BA0/5 ; KA0/5 N | D | 1870 | F9Q | A | + | TSW | 10/98 ▸ 02/03 | 8200189288 | **732817** | 585 | 414,5 | ALM |
| 1.9 dCi,1.9 dTi | BA0/5/N ; DA0/5/N KA0/5/N | D | 1870 | F9Q | A | + | TSW | 10/98 ▸ 01/02 | 7700429769 | **732559** | 585 | 377,5 | ALM |
| 1.9 dCi,1.9 dTi | BA0/5/N ; DA0/5/N KA0/5/N | D | 1870 | F9Q | A | - | TSW | 10/98 ▸ 02/03 | 7700838135 | **731379** | 570 | 377,5 | ALM |

## MEGANE CLASSIC (96>99)

| | | | | | | | | | | | | | |
|---|---|---|---|---|---|---|---|---|---|---|---|---|---|
| 1.4 i | LA0V | E | 1390 | E7J | M | +/- | TSW | 09/96 ▸ 02/99 | 7700838134 | **731378** | 430 | 377,5 | ALM |
| 1.4 i | LA0E | E | 1390 | E7J | M | + | TSW | 09/96 ▸ 05/98 | 7700838133 | **731380** | 585 | 397,5 | ALB |
| 1.4 i,1.4 i 16V | LA0/E/W | E | 1390 | E7J,K4J | M | + | TSW | 05/98 ▸ 02/99 | 7700425842 | **732316** | 585 | 414,5 | ALM |
| 1.4 i,1.4 i 16V | LA0/E/W | E | 1390 | E7J,K4J | M | - | TSW | 09/96 ▸ 02/99 | 7700838134 | **731378** | 430 | 377,5 | ALM |
| 1.6 e | LA1C ; LA0/F/L/S | E | 1598 | K7M | M | + | TSW | 09/96 ▸ 05/98 | 7701352605 | **731380** | 585 | 397,5 | ALB |
| 1.6 e,1.6 i 16V | LA1C ; LA0/4/F/L/S | E | 1598 | K4M,K7M | M | + | TSW | 09/96 ▸ 02/99 | 7700425842 | **732316** | 585 | 414,5 | ALM |
| 1.6 e | LA0S ; LA1C | E | 1598 | K7M | M | - | TSW | 09/96 ▸ 02/99 | 7700838135 | **731379** | 570 | 377,5 | ALM |
| 1.6 e,1.6 i 16V | LA1C ; LA0/4/F/L/S | E | 1598 | K4M,K7M | M | - | TSW | 09/96 ▸ 02/99 | 7700838134 | **731378** | 430 | 377,5 | ALM |
| 1.6 e | LA0F | E | 1598 | K7M | A | + | TSW | 09/96 ▸ 05/98 | 7701352605 | **731380** | 585 | 397,5 | ALB |
| 1.6 e,1.6 i 16V | LA0/4/F | E | 1598 | K4M,K7M | A | + | TSW | 05/98 ▸ 02/99 | 7700425842 | **732316** | 585 | 414,5 | ALM |
| 1.6 e,1.6 i 16V | LA0/4/F | E | 1598 | K4M,K7M | A | - | TSW | 09/96 ▸ 02/99 | 7700838135 | **731379** | 570 | 377,5 | ALM |
| 2.0 i | LA0/7/G | E | 1998 | F3R | M | + | TSW | 09/96 ▸ 05/98 | 7700838133 | **731380** | 585 | 397,5 | ALB |
| 2.0 i | LA0/7/G | E | 1998 | F3R | M | + | TSW | 05/98 ▸ 02/99 | 7700425842 | **732316** | 585 | 414,5 | ALM |
| 2.0 i | LA0/7/G | E | 1998 | F3R | M | - | TSW | 09/96 ▸ 02/99 | 7700838135 | **731379** | 570 | 377,5 | ALM |
| 2.0 i | LA0/7/G | E | 1998 | F3R | A | + | TSW | 09/96 ▸ 05/98 | 7701352605 | **731380** | 585 | 397,5 | ALB |
| 2.0 i | LA0/7/G | E | 1998 | F3R | A | + | TSW | 05/98 ▸ 02/99 | 7700425842 | **732316** | 585 | 414,5 | ALM |
| 2.0 i | LA0/7/G | E | 1998 | F3R | A | - | TSW | 09/96 ▸ 02/99 | 7700838135 | **731379** | 570 | 377,5 | ALM |
| 1.9 D,1.9 dT | LA0/A/K/R/U/Y | D | 1870 | F8Q | M | +/- | TSW | 09/96 ▸ 02/99 | 7700429769 | **732559** | 585 | 377,5 | ALM |
| 1.9 D,1.9 dT | LA0/A/K/U/Y | D | 1870 | F8Q | M | + | TSW 820032 | 09/96 ▸ 08/97 | 7701352606 | **731538** | 585 | 396 | ALB |
| 1.9 dTi | LA1U ; LA0/8/N | D | 1870 | F9Q | M | + | TSW | 10/96 ▸ 05/98 | 7700838133 | **731380** | 585 | 397,5 | ALB |
| 1.9 dTi | LA0N ; LA1U | D | 1870 | F9Q | M | + | TSW | 05/98 ▸ 02/99 | 7700425842 | **732316** | 585 | 414,5 | ALM |
| 1.9 D,1.9 dT | LA0/A/K/U/Y | D | 1870 | F8Q | M | - | TSW | 09/96 ▸ 08/97 | 7700838133 | **731380** | 585 | 397,5 | ALB |
| 1.9 dTi | LA1U ; LA0/8/N | D | 1870 | F9Q | M | - | TSW | 10/96 ▸ 02/99 | 7700838135 | **731379** | 570 | 377,5 | ALM |
| 1.9 dTi | LA0N | D | 1870 | F9Q | A | + | TSW | 04/97 ▸ 05/98 | 7700838133 | **731380** | 585 | 397,5 | ALB |
| 1.9 dTi | LA0N | D | 1870 | F9Q | A | + | TSW | 05/98 ▸ 02/99 | 7700425842 | **732316** | 585 | 414,5 | ALM |
| 1.9 dTi | LA0N | D | 1870 | F9Q | A | - | TSW | 04/97 ▸ 02/99 | 7700838135 | **731379** | 570 | 377,5 | ALM |

## MEGANE CLASSIC (99>2002)

| | | | | | | | | | | | | | |
|---|---|---|---|---|---|---|---|---|---|---|---|---|---|
| 1.4 i 16V | LA0/D/W ; LA1/0/H | E | 1390 | K4J | M | + | TSW | 03/99 ▸ 01/02 | 7700425842 | **732316** | 585 | 414,5 | ALM |
| 1.4 i 16V | LA0/D/W ; LA1/0/H | E | 1390 | K4J | M | + | TSW | 01/02 ▸ 08/02 | 8200189286 | **732866** | 585 | 414,5 | ALM |
| 1.4 i,1.4 i 16V | LA0/D/V/W ; LA1/0/H | E | 1390 | E7J,K4J | M | - | TSW | 03/99 ▸ 08/02 | 7700838134 | **731378** | 430 | 377,5 | ALM |

# RENAULT (.../...)

## MEGANE CLASSIC (99>2002) (.../...)

| Type Ctr. | | CC | | AC | | | OE | Valeo | DIM. | TECH |
|---|---|---|---|---|---|---|---|---|---|---|
| 1.6 i,1.6 i 16V LA0/0/4/B ; LA1/1/C J/K | E | 1598 | K4M,K7M | M | + | TSW | 03/99 ▸ 08/02 | 7700425842 | **732316** | 585 414,5 | ALM |
| 1.6 i,1.6 i 16V LA0/0/4/B ; LA1/1/C J/K | E | 1598 | K4M,K7M | M | - | TSW | 03/99 ▸ 08/02 | 7700838134 | **731378** | 430 377,5 | ALM |
| 1.6 i 16V LA11 ; LA0/4/B | E | 1598 | K4M | A | + | TSW | 03/99 ▸ 08/02 | 8200189288 | **732817** | 585 414,5 | ALM |
| 1.6 i 16V LA0/4/B ; LA1/1/J | E | 1598 | K4M | A | + | TSW | 03/99 ▸ 08/02 | 7700425842 | **732316** | 585 414,5 | ALM |
| 1.6 i 16V LA0/4/B ; LA1/1/J | E | 1598 | K4M | A | - | TSW | 03/99 ▸ 08/02 | 7700838134 | **731378** | 430 377,5 | ALM |
| 1.6 i 16V LA11 ; LA0/4/B | E | 1598 | K4M | A | - | TSW | 03/99 ▸ 08/02 | 7700838135 | **731379** | 570 377,5 | ALM |
| 1.6 i 16V LA1J | E | 1598 | K4M | A | | TSW | 12/00 ▸ 08/02 | 8200189288 | **732817** | 585 414,5 | ALM |
| 1.8 i 16V LA1/2/A | E | 1783 | F4P | M | +/- | TSW | 07/00 ▸ 08/02 | 8200189286 | **732866** | 585 414,5 | ALM |
| 1.8 i 16V LA1/2/A/M/R | E | 1783 | F4P | M | + | TSW | 04/00 ▸ 08/02 | 7700425842 | **732316** | 585 414,5 | ALM |
| 1.8 i 16V LA1R | E | 1783 | F4P | M | + | TSW | 09/01 ▸ 08/02 | 8200189286 | **732866** | 585 414,5 | ALM |
| 1.8 i 16V LA1M | E | 1783 | F4P | M | | TSW | 04/00 ▸ 06/00 | 8200189286 | **732866** | 585 414,5 | ALM |
| 2.0 i 16V LA1L | E | 1998 | F4R | M | +/- | TSW | 01/01 ▸ 10/01 | 7700429769 | **732559** | 585 377,5 | ALM |
| 2.0 i,2.0 i 16V LA1D ; LA0/7/G | E | 1998 | F3R,F4R | M | + | TSW | 03/99 ▸ 08/02 | 7700425842 | **732316** | 585 414,5 | ALM |
| 2.0 i LA0/7/G | E | 1998 | F3R | M | - | TSW | 03/99 ▸ 08/02 | 7700838135 | **731379** | 570 377,5 | ALM |
| 2.0 i 16V LA1L | E | 1998 | F4R | M | | TSW | 01/01 ▸ 10/01 | 7700425842 | **732316** | 585 414,5 | ALM |
| 2.0 i LA0G | E | 1998 | F3R | A | + | TSW | 03/99 ▸ 08/02 | 7700425842 | **732316** | 585 414,5 | ALM |
| 2.0 i 16V LA1/D/L | E | 1998 | F4R | A | + | TSW | 01/01 ▸ 10/01 | 7700429769 | **732559** | 585 377,5 | ALM |
| 2.0 i LA0G | E | 1998 | F3R | A | - | TSW | 03/99 ▸ 08/02 | 7700838135 | **731379** | 570 377,5 | ALM |
| 1.9 D LA0R | D | 1870 | F8Q | M | +/- | TSW | 03/99 ▸ 03/01 | 7700429769 | **732559** | 585 377,5 | ALM |
| 1.9 dCi,1.9 dTi LA0/5/N | D | 1870 | F9Q | M | + | TSW | 03/99 ▸ 09/00 | 7700425842 | **732316** | 585 414,5 | ALM |
| 1.9 dCi,1.9 dTi LA1U ; LA0/1/5/N | D | 1870 | F9Q | M | + | TSW | 09/00 ▸ 01/02 | 7700429769 | **732559** | 585 377,5 | ALM |
| 1.9 dCi,1.9 dTi LA1U ; LA0/1/5/N | D | 1870 | F9Q | M | + | TSW | 01/02 ▸ 08/02 | 8200189288 | **732817** | 585 414,5 | ALM |
| 1.9 dCi,1.9 dTi LA1U ; LA0/1/5/N | D | 1870 | F9Q | M | - | TSW | 03/99 ▸ 08/02 | 7700838135 | **731379** | 570 377,5 | ALM |
| 1.9 dCi,1.9 dTi LA0/5/N | D | 1870 | F9Q | A | + | TSW | 03/99 ▸ 09/00 | 7700425842 | **732316** | 585 414,5 | ALM |
| 1.9 dCi,1.9 dTi LA0/5/N | D | 1870 | F9Q | A | + | TSW | 09/00 ▸ 01/02 | 7700429769 | **732559** | 585 377,5 | ALM |
| 1.9 dCi,1.9 dTi LA0/5/N | D | 1870 | F9Q | A | + | TSW | 01/02 ▸ 08/02 | 8200189288 | **732817** | 585 414,5 | ALM |
| 1.9 dCi,1.9 dTi LA0/5/N | D | 1870 | F9Q | A | - | TSW | 03/99 ▸ 08/02 | 7700838135 | **731379** | 570 377,5 | ALM |

## MÉGANE II (2002>)

| | | | | | | | | | | | |
|---|---|---|---|---|---|---|---|---|---|---|---|
| 1.6 i 16V BM1Y ; KM2K ; BM2K<br>1.6 i Ethanol 85 16V CM0Y ; CM1Y<br>1.6 i GPL 16V | F | 1598 | K4M | M | | | 09/04 ▸ 10/08 | 8200115541 | **732873** | 451,5 590 | ALM |
| 1.6 i 16V,1.6 i GPL 16V KM0Y ; LM0Y ; BM0Y | F | 1598 | K4M | M | | | 09/02 ▸ 10/08 | 8200357536 | **732946** | 589 451 | ALB |
| 1.6 i 16V,1.6 i GPL 16V BM0Y ; LM0Y ; KM0Y | F | 1598 | K4M | M | +/- | | 09/02 ▸ 10/08 | 8200115542 | **732874** | 590 451,5 | ALM |
| 1.6 i 16V,1.6 i GPL 16V KM0Y ; BM0Y ; LM0Y | F | 1598 | K4M | M | +/- | | 09/02 ▸ 10/08 | 8200115541 | **732873** | 451,5 590 | ALM |
| 1.4 i 16V CM1S ; LM1S ; BM1S<br>KM1S | E | 1390 | K4J | M | | | 09/05 ▸ 10/08 | 8200115541 | **732873** | 451,5 590 | ALM |
| 1.4 i 16V BM0B ; CM0B | E | 1390 | K4J | M | +/- | | 09/02 ▸ 12/05 | 8200115542 | **732874** | 590 451,5 | ALM |
| 1.4 i 16V LM0B ; CM0B ; BM1A<br>LM08 ; CM0H ; LM0H ; BM08 ; BM0B ; KM0B<br>BM0H ; KM0H ; CM08 ; LM1A | E | 1390 | K4J | M | +/- | | 09/02 ▸ 12/05 | 8200115541 | **732873** | 451,5 590 | ALM |
| 1.6 i 16V LM0J ; LM0C ; LM1B<br>KM0C ; KM1B ; BM0J ; EM0J ; KM0J ; BM0C<br>EM1B ; EM0C ; BM1B | E | 1598 | K4M | A | +/- | | 09/02 ▸ 10/08 | 8200115542 | **732874** | 590 451,5 | ALM |
| 1.6 i 16V KM1R ; BM1R ; LM1R<br>EM1R ; CM1R | E | 1598 | K4M | A | | | 09/02 ▸ 07/09 | 8200115542 | **732874** | 590 451,5 | ALM |
| 1.6 i 16V CM1R ; BM1R ; KM1R<br>LM1R ; EM1R | E | 1598 | K4M | M | | | 09/02 ▸ 07/09 | 8200115541 | **732873** | 451,5 590 | ALM |
| 1.6 i 16V KM0J ; CM1B ; LM1B<br>CM0J ; KM0C ; KM1B ; LM0J ; BM0C ; CM0C<br>EM0C ; BM0J ; LM0C ; EM1B ; BM1B ; EM0J | E | 1598 | K4M | M | +/- | | 09/02 ▸ 10/08 | 8200115541 | **732873** | 451,5 590 | ALM |
| 2.0 i Turbo 16V CM2H | E | 1998 | F4R | A | +/- | | 09/05 ▸ 10/08 | 8200357536 | **732946** | 589 451 | ALB |
| 2.0 i 16V EM1N ; LM1M ; LM0U<br>BM0U ; BM1M ; EM0U ; KM05 ; KM1N ; LM05<br>EM1M ; EM05 ; LM1N ; BM05 ; EM1U ; CM05<br>CM0U ; BM1U ; KM1U ; KM1M ; LM1U ; KM0U | E | 1998 | F4R | A | +/- | | 09/02 ▸ 07/09 | 8200115542 | **732874** | 590 451,5 | ALM |
| 2.0 i Turbo 16V BM1T ; CM0W ; BM11<br>EM0W ; BM0W ; BM1V ; CM0M ; EM1T ; BM0M | E | 1998 | F4R | M | +/- | | 03/04 ▸ 01/09 | 8200357536 | **732946** | 589 451 | ALB |
| 2.0 i 16V KM1M ; EM0U ; LM0U<br>LM1N ; BM1U ; KM05 ; LM1M ; BM1N ; BM05<br>KM0U ; BM0U ; KM1N ; KM1U ; EM05 ; CM1U<br>EM1N ; LM1U ; CM05 ; CM1N ; LM05 ; BM1M<br>EM1U ; CM1M ; CM0U | E | 1998 | F4R | M | +/- | | 09/02 ▸ 07/09 | 8200115542 | **732874** | 590 451,5 | ALM |
| 1.5 dCi GM1F ; BM02 ; BM1F<br>CM1F ; CM02 ; KM1F ; LM1F ; BM13 ; SM1F | D | 1461 | K9K | M | | | 09/02 ▸ | 8200115542 | **732874** | 590 451,5 | ALM |
| 1.5 dCi CM16 ; GM16 ; KM16<br>BM16 ; EM16 ; SM16 ; LM16 | D | 1461 | K9K | M | | | 09/05 ▸ 07/09 | 8200357536 | **732946** | 589 451 | ALB |

Radiator Radiateur Motorkühler Radiatore di raffreddamento Radiator Radyatör Radiador Радиатор vízhűtő Vodní chladič Radiator Ψυγείο



• **New** Nouveau **Nuevo** Novo **Nuovo** Nieuw **Neu** Nowość **Yeni** Новый Νέο **Nový**

## MÉGANE II (2002>) (.../...)

| Type Ctr. | | | CC | | | AC | | | OE | Valeo | DIM. | TECH |
|---|---|---|---|---|---|---|---|---|---|---|---|---|
| 1.5 dCi | LM02 ; KM02 ; CM02 BM02 | D | 1461 | K9K | A | +/- | | 09/03 ▸ | 8200357536 | **732946** | 589 451 | ALB |
| 1.5 dCi | LM0F ; SM0F ; KM0T CM0F ; BM0T ; KM0F ; GM0F ; LM0T ; BM0F | D | 1461 | K9K | M | +/- | | 09/02 ▸ 10/08 | 8200115542 | **732874** | 590 451,5 | ALM |
| 1.5 dCi | LM02 ; EM1E ; BM13 LM1E ; KM1F ; CM1E ; KM1E ; BM02 ; KM02 SM02 ; GM02 ; BM1F ; KM13 ; BM1E ; LM1F LM13 ; CM02 ; GM1E ; GM1F ; SM1E ; CM1F SM1F | D | 1461 | K9K | M | +/- | | 09/02 ▸ | 8200357536 | **732946** | 589 451 | ALB |
| 1.9 dCi | EM14 ; EM1D | D | 1870 | F9Q | A | | | 05/05 ▸ 07/09 | 8200325007 | **734438** | 629 451,5 | ALB |
| 1.9 dCi | EM1D | D | 1870 | F9Q | M | | | 05/05 ▸ 07/09 | 8200115542 | **732874** | 590 451,5 | ALM |
| 1.9 dCi | EM14 | D | 1870 | F9Q | A | +/- | | 05/05 ▸ 07/09 | 8200357536 | **732946** | 589 451 | ALB |
| 1.9 dCi | LM1C ; KM1C ; BM1C CM1C ; EM1C | D | 1870 | F9Q | M | | | 09/03 ▸ 10/08 | 8200115541 | **732873** | 451,5 590 | ALM |
| 1.9 dCi | LM0G ; LM1G ; BM1G EM1G ; BM0G ; KM1G ; KM0G ; EM0G ; CM1G CM0G ; EM1D | D | 1870 | F9Q | M | +/- | | 09/02 ▸ 02/06 | 8200357536 | **732946** | 589 451 | ALB |
| 1.9 dCi | BM00 ; LM14 ; LM0L CM1G ; LM00 ; BM0L ; EM1C ; EM14 ; EM17 BM0G ; LM1G ; CM0L ; BM17 ; CM1D ; BM1D KM17 ; EM0G ; EM1G ; LM1D ; CM0G ; BM1G LM1C ; LM0G ; CM1C ; KM1D ; KM0G ; KM0L CM00 ; KM1G ; KM14 ; BM1C ; CM14 ; BM14 EM1D ; KM00 ; KM1C ; CM17 ; LM17 | D | 1870 | F9Q | M | +/- | | 09/02 ▸ | 8200115542 | **732874** | 590 451,5 | ALM |
| 1.9 dCi | EM14 | D | 1870 | F9Q | M | + | | 05/05 ▸ 07/09 | 8200115542 | **732874** | 590 451,5 | ALM |
| 1.9 dCi | EM14 | D | 1870 | F9Q | A | +/- | | 05/05 ▸ 07/09 | 8200115542 | **732874** | 590 451,5 | ALM |
| 2.0 dCi | EM1K ; BM1W ; CM1W | D | 1995 | M9R | M | | | 01/06 ▸ 07/09 | 8200325007 | **734438** | 629 451,5 | ALB |
| 2.0 dCi | BM1K ; EM1K ; CM1K LM1K ; KM1K | D | 1995 | M9R | M | +/- | | 01/06 ▸ 07/09 | 8200325007 | **734438** | 629 451,5 | ALB |

## MÉGANE III (2008>)

| Type Ctr. | | | CC | | | AC | | | OE | Valeo | DIM. | TECH |
|---|---|---|---|---|---|---|---|---|---|---|---|---|
| 1.4 TCe 130 16V<br>1.4 i 130 16V<br>1.4TCe 130 16V | BZ0F ; DZ1V ; KZ1V BZ1V ; EZ1V ; KZ0F EZ0F ; DZ0F | E | 1397 | H4J | M | | | 04/09 ▸ | 214100002R | •**735607** | 629,4 377,5 | ALM |
| 1.4 TCe 130 16V | BZ0F | E | 1397 | H4J | M | +/- | | 04/09 ▸ | 214100002R | •**735607** | 629,4 377,5 | ALM |
| 1.6 i 100 16V<br>1.6 i 110 16V | DZ0U ; DZ1B ; KZ1B BZ0U ; EZ1U ; EZ0U DZ1H ; KZ0H ; KZ1U ; BZ1U ; DZ0T ; BZ1H BZ0T ; BZ0H ; DZ1U ; KZ1R ; BZ1B ; KZ0U DZ0H | E | 1598 | K4M | M | | | 10/08 ▸ | 214100014R | **735184** | 652 488,5 | ALM |
| 1.6 i 110 16V | EZ03 | F | 1598 | K4M | M | | | 03/10 ▸ | 214100016R | **735182** | 652 390 | ALB |
| 1.6 i 110 16V | DZ03 ; DZ1Y ; BZ1Y | F | 1598 | K4M | M | +/- | | 12/08 ▸ | 214100014R | **735184** | 652 488,5 | ALM |
| 1.6 i 100 16V<br>1.6 i 110 16V | BZ0U ; BZ1R ; BZ1B | E | 1598 | K4M | M | +/- | | 10/08 ▸ | 214100014R | **735184** | 652 488,5 | ALM |
| 1.6 i 110 16V | DZ03 ; KZ03 ; KZ1Y EZ1Y ; BZ03 ; BZ1Y ; EZ03 ; DZ1Y | F | 1598 | K4M | M | | | 10/08 ▸ | 214100014R | **735184** | 652 488,5 | ALM |
| 2.0 i 140 16V | BZ0G | E | 1997 | M4R | A | | | 10/08 ▸ | 214100014R | **735184** | 652 488,5 | ALM |
| 2.0 i 140 16V | EZ0G ; DZ1E ; EZ1P BZ0G ; KZ0G ; DZ0G | E | 1997 | M4R | A | | | 10/08 ▸ | 214100016R | **735182** | 652 390 | ALB |
| 2.0 i 140 16V | EZ1E ; DZ1P ; BZ1P KZ1P | E | 1997 | M4R | A | | | 10/08 ▸ | 214100057R | **735180** | | |
| 2.0 i 140 16V | BZ1E | E | 1997 | M4R | M | | | 10/08 ▸ | 214100016R | **735182** | 652 390 | ALB |
| 2.0 i 140 16V | DZ1E ; BZ1E | E | 1997 | M4R | M | +/- | | 07/09 ▸ | 214100016R | **735182** | 652 390 | ALB |
| 2.0 i 140 16V | BZ1E ; BZ1P ; DZ1E KZ1P ; KZ0G ; DZ0G ; DZ1P | E | 1997 | M4R | A | +/- | | 12/08 ▸ | 214100016R | **735182** | 652 390 | ALB |
| 2.0 TCe 180 16V | EZ0K ; DZ0K ; KZ0K BZ0K ; KZ1T ; EZ1T ; BZ1T ; DZ1T ; DZ04 | E | 1998 | F4R | M | | | 10/08 ▸ | 214100016R | **735182** | 652 390 | ALB |
| 2.0 TCe 180 16V<br>2.0 TCe 250 16V | DZ1N ; DZ04 | E | 1998 | F4R | M | | | 12/08 ▸ | 214100057R | **735180** | | |
| 1.5 dCi 110 | KZ09 ; EZ09 ; DZ09 BZ09 | D | 1461 | K9K | A | | | 03/10 ▸ | 214100002R | •**735607** | 629,4 377,5 | ALM |
| 1.5 dCi 110,1.5 dCi 90 | BZ1F ; DZ0D ; BZ1A BZ1G ; DZ1F ; KZ1G ; DZ1A ; DZ1G ; KZ1A DZ0C ; KZ0C | D | 1461 | K9K | M | +/- | | 12/08 ▸ | 214100002R | •**735607** | 629,4 377,5 | ALM |
| 1.5 dCi 105 | DZ0B | D | 1461 | K9K | M | +/- | | 12/08 ▸ | 214105150R | •**735607** | 629,4 377,5 | ALM |
| 1.5 dCi 106 | DZ1W | D | 1461 | K9K | M | | | 07/09 ▸ | 214105150R | •**735607** | 629,4 377,5 | ALM |
| 1.5 dCi 110 | EZ09 ; KZ09 ; DZ09 BZ09 | D | 1461 | K9K | A | | | 03/10 ▸ | 214105150R | •**735607** | 629,4 377,5 | ALM |

# RENAULT (.../...)

## MÉGANE III (2008>) (.../...)

| Type Ctr. | CC | | AC | | 2+3 | OE | Valeo | DIM. | TECH |
|---|---|---|---|---|---|---|---|---|---|
| 1.5 dCi 105,1.5 dCi 110 DZ0D ; EZ0B ; BZ0C<br>1.5 dCi 85,1.5 dCi 90 EZ1G ; KZ0D ; KZ0A<br>BZ1G ; BZ1F ; BZ0D ; KZ1F ; DZ1G ; DZ1A<br>DZ0A ; KZ1A ; BZ1A ; BZ1W ; KZ1M ; DZ0B<br>KZ1G ; BZ0B ; DZ1W ; EZ07 ; EZ0D ; BZ0A<br>KZ0B ; KZ1W ; DZ0C ; DZ1F ; KZ0C ; BZ1M<br>DZ1M | D | 1461 | K9K | M | | | 10/08 ▸ | 214100002R | •735607 | 629,4 377,5 | ALM |
| 1.9 dCi 130 BZ1S ; BZ0N ; DZ0J<br>1.9 dCi 130 16V KZ1S ; BZ0J ; EZ0J<br>KZ0N ; KZ0J ; DZ1S ; DZ0N ; DZ1K ; EZ1S<br>DZ1J ; BZ1K ; BZ1J | D | 1870 | F9Q | M | | | 10/08 ▸ | 214100016R | 735182 | 652 390 | ALB |
| 1.9 dCi 130 KZ0J ; KZ1S ; BZ1S<br>DZ1S ; BZ0J ; DZ1J ; BZ1J ; DZ0J | D | 1870 | F9Q | M | +/- | | 10/08 ▸ | 214100016R | 735182 | 652 390 | ALB |
| 2.0 dCi 150 KZ0Y ; DZ0Y ; BZ0Y | D | 1995 | M9R | A | | | 10/08 ▸ | 214100057R | 735180 | | |
| 2.0 dCi 160 DZ0L ; KZ0L ; BZ0L | D | 1995 | M9R | M | | | 10/08 ▸ | 214100057R | 735180 | | |
| 2.0 dCi 160 16V EZ0L | D | 1995 | M9R | A | | | 03/10 ▸ | 214100016R | 735182 | 652 390 | ALB |
| 2.0 dCi 160 DZ0L | D | 1995 | M9R | M | +/- | | 07/09 ▸ | 214100016R | 735182 | 652 390 | ALB |
| 2.0 dCi 150 DZ0Y | D | 1995 | M9R | A | +/- | | 07/09 ▸ | 214100057R | 735180 | | |

## MEGANE SCENIC (96>99)

| | | | | | | | | | | | |
|---|---|---|---|---|---|---|---|---|---|---|---|
| 1.4 i JA0E | E | 1390 | E7J | M | + | TSW | 10/96 ▸ 06/98 | 7701352605 | 731380 | 585 397,5 | ALB |
| 1.4 i,1.4 i 16V JA0/E/W | E | 1390 | E7J,K4J | M | + | TSW | 05/98 ▸ 09/99 | 7700425842 | 732316 | 585 414,5 | ALM |
| 1.4 i 16V JA0W | E | 1390 | K4J | M | + | TSW | 02/99 ▸ 09/99 | 7700429769 | 732559 | 585 377,5 | ALM |
| 1.4 i JA0E | E | 1390 | E7J | M | - | TSW | 10/96 ▸ 06/98 | 7700425842 | 732316 | 585 414,5 | ALM |
| 1.4 i JA0E | E | 1390 | E7J | M | - | TSW | 10/96 ▸ 06/98 | 7700838135 | 731379 | 570 377,5 | ALM |
| 1.4 i,1.4 i 16V JA0/E/W | E | 1390 | E7J,K4J | M | - | TSW | 10/97 ▸ 09/99 | 7700838134 | 731378 | 430 377,5 | ALM |
| 1.6 i JA0/F/L | E | 1598 | K7M | M | + | TSW | 10/96 ▸ 05/98 | 7700838133 | 731380 | 585 397,5 | ALB |
| 1.6 i JA0/F/L | E | 1598 | K7M | M | + | TSW | 09/97 ▸ 09/99 | 7700425842 | 732316 | 585 414,5 | ALM |
| 1.6 i JA0/F/L | E | 1598 | K7M | M | - | TSW | 10/96 ▸ 10/97 | 7700838135 | 731379 | 570 377,5 | ALM |
| 1.6 i JA0/F/L | E | 1598 | K7M | M | - | TSW | 09/97 ▸ 09/99 | 7700838134 | 731378 | 430 377,5 | ALM |
| 1.6 i JA0F | E | 1598 | K7M | A | +/- | TSW | 10/96 ▸ 09/97 | 7700838133 | 731380 | 585 397,5 | ALB |
| 1.6 i JA0F | E | 1598 | K7M | A | + | TSW | 09/97 ▸ 09/99 | 7700838133 | 731380 | 585 397,5 | ALB |
| 1.6 i JA0F<br>980507 ▸ | E | 1598 | K7M | A | + | TSW | 05/98 ▸ 09/99 | 7700425842 | 732316 | 585 414,5 | ALM |
| 1.6 i JA0F | E | 1598 | K7M | A | - | TSW | 10/96 ▸ 09/97 | 7701352605 | 731380 | 585 397,5 | ALB |
| 1.6 i JA0F | E | 1598 | K7M | A | - | TSW | 09/97 ▸ 09/99 | 7700838135 | 731379 | 570 377,5 | ALM |
| 1.6 i JA0F | E | 1598 | K7M | A | | TSW | 09/97 ▸ 09/99 | 7701352605 | 731380 | 585 397,5 | ALB |
| 2.0 i JA0G | E | 1998 | F3R | M | + | TSW | 10/96 ▸ 09/99 | 7701352605 | 731380 | 585 397,5 | ALB |
| 2.0 i JA0G<br>980507 ▸ | E | 1998 | F3R | M | + | TSW | 05/98 ▸ 09/99 | 7700425842 | 732316 | 585 414,5 | ALM |
| 2.0 i JA0G | E | 1998 | F3R | M | - | TSW | 10/96 ▸ 09/99 | 7700838135 | 731379 | 570 377,5 | ALM |
| 2.0 i JA0G | E | 1998 | F3R | A | + | TSW | 10/96 ▸ 09/99 | 7700838133 | 731380 | 585 397,5 | ALB |
| 2.0 i JA0G<br>980507 ▸ | E | 1998 | F3R | A | + | TSW | 10/96 ▸ 09/99 | 7700425842 | 732316 | 585 414,5 | ALM |
| 2.0 i JA0G | E | 1998 | F3R | A | + | TSW | 10/96 ▸ 05/98 | 7701352605 | 731380 | 585 397,5 | ALB |
| 2.0 i JA0G | E | 1998 | F3R | A | - | TSW | 10/96 ▸ 09/99 | 7701352605 | 731380 | 585 397,5 | ALB |
| 2.0 i JA0G | E | 1998 | F3R | A | - | TSW | 10/96 ▸ 09/98 | 7700838133 | 731380 | 585 397,5 | ALB |
| 2.0 i JA0G | E | 1998 | F3R | A | - | TSW | 01/98 ▸ 09/98 | 7700838135 | 731379 | 570 377,5 | ALM |
| 1.9 D FA0J | D | 1870 | F8Q | M | +/- | TSW | 02/98 ▸ 09/99 | 7700838133 | 731380 | 585 397,5 | ALB |
| 1.9 D,1.9 dT FA0/Y ; JA0/J/K/Y | D | 1870 | F8Q | M | + | TSW 820032 | 10/96 ▸ 09/99 | 7700838129 | 731538 | 585 396 | ALB |
| 1.9 dTi FA0N ; JA0N | D | 1870 | F9Q | M | + | TSW | 04/97 ▸ 09/99 | 7700838133 | 731380 | 585 397,5 | ALB |
| 1.9 D,1.9 dT FA0/J ; JA0/J/K | D | 1870 | F8Q | M | - | TSW | 10/96 ▸ 09/99 | 7700425842 | 732316 | 585 414,5 | ALM |
| 1.9 D,1.9 dT FA0/J/Y ; JA0/J/K/Y | D | 1870 | F8Q | M | - | TSW | 10/96 ▸ 09/99 | 7701352605 | 731380 | 585 397,5 | ALB |
| 1.9 dTi FA0N ; JA0N | D | 1870 | F9Q | M | - | TSW | 04/97 ▸ 09/99 | 7700838135 | 731379 | 570 377,5 | ALM |
| 1.9 dTi JA0N | D | 1870 | F9Q | A | + | TSW | 04/97 ▸ 09/99 | 7701352605 | 731380 | 585 397,5 | ALB |
| 1.9 dTi JA0N | D | 1870 | F9Q | A | - | TSW | 04/97 ▸ 09/99 | 7700838135 | 731379 | 570 377,5 | ALM |

## MEGANE SCENIC (99>2003)

| | | | | | | | | | | | |
|---|---|---|---|---|---|---|---|---|---|---|---|
| 1.4 i 16V JA0/D ; JA1/0/H | E | 1390 | K4J | M | + | TSW | 09/99 ▸ 04/03 | 7700425842 | 732316 | 585 414,5 | ALM |
| 1.4 i 16V JA0/D ; JA1/0/H | E | 1390 | K4J | M | - | TSW | 09/99 ▸ 04/03 | 7700838134 | 731378 | 430 377,5 | ALM |
| 1.6 i 16V,1.6 i GPL 16V JA0/0/4/B ; JA1/1/J | E | 1598 | K4M | M | + | TSW | 09/99 ▸ 04/03 | 7700425842 | 732316 | 585 414,5 | ALM |
| 1.6 i 16V,1.6 i GPL 16V JA0/4/B ; JA1/1/J | E | 1598 | K4M | M | + | TSW | 09/99 ▸ 04/03 | 7700429769 | 732559 | 585 377,5 | ALM |
| 1.6 i 16V,1.6 i GPL 16V JA0/0/4/B ; JA1/1/J | E | 1598 | K4M | M | - | TSW | 09/99 ▸ 04/03 | 7700838134 | 731378 | 430 377,5 | ALM |
| 1.6 i 16V JA0/4/B ; JA1/1/J | E | 1598 | K4M | A | + | TSW | 09/99 ▸ 04/03 | 7700425842 | 732316 | 585 414,5 | ALM |
| 1.6 i 16V JA0/4/B ; JA1/1/J | E | 1598 | K4M | A | + | TSW | 09/99 ▸ 04/03 | 7700429769 | 732559 | 585 377,5 | ALM |
| 1.6 i 16V JA0B ; JA1J | E | 1598 | K4M | A | - | TSW | 09/99 ▸ 04/03 | 7700838134 | 731378 | 430 377,5 | ALM |
| 1.6 i 16V JA0/4/B ; JA1/1/J | E | 1598 | K4M | A | - | TSW | 09/99 ▸ 04/03 | 7700838135 | 731379 | 570 377,5 | ALM |
| 1.8 i 16V JA1/2/A/M/R | E | 1783 | F4P | M | + | TSW | 09/99 ▸ 04/03 | 7700425842 | 732316 | 585 414,5 | ALM |
| 1.8 i 16V JA1/2/A/M | E | 1783 | F4P | M | | TSW | 04/00 ▸ 04/03 | 7700425842 | 732316 | 585 414,5 | ALM |

Radiator Radiateur Motorkühler Radiatore di raffreddamento Radiator Radyatör Radiador Радиатор vízhűtő Vodní chladič Radiator Ψυγείο



• **New** Nouveau **Nuevo** Novo **Nuovo** Nieuw **Neu** Nowość **Yeni** Новый Νέο **Nový**

# RENAULT (.../...)

## MEGANE SCENIC (99>2003) (.../...)

| | | | CC | | | AC | | | OE | Valeo | DIM. | | TECH |
|---|---|---|---|---|---|---|---|---|---|---|---|---|---|
| 2.0 i 16V | JA0/C ; JA1/3/B/D/L/S | E | 1998 | F4R | M | + | TSW | 09/99 ▸ 04/03 | 7700425842 | 732316 | 585 | 414,5 | ALM |
| 2.0 i 16V | JA1D | E | 1998 | F4R | M | + | TSW | 08/01 ▸ 04/03 | 7700429769 | 732559 | 585 | 377,5 | ALM |
| 2.0 i 16V | JA1D | E | 1998 | F4R | M | - | TSW | 08/01 ▸ 04/03 | 7700838135 | 731379 | 570 | 377,5 | ALM |
| 2.0 i 16V | JA0/C ; JA1/3/B/L/S | E | 1998 | F4R | M | | TSW | 09/99 ▸ 04/03 | 7700429769 | 732559 | 585 | 377,5 | ALM |
| 2.0 i 16V | JA0/C ; JA1/3/B/D/L/S | E | 1998 | F4R | A | + | TSW | 09/99 ▸ 04/03 | 7700425842 | 732316 | 585 | 414,5 | ALM |
| 2.0 i 16V | JA1D | E | 1998 | F4R | A | + | TSW | 08/01 ▸ 04/03 | 7700429769 | 732559 | 585 | 377,5 | ALM |
| 2.0 i 16V | JA1D | E | 1998 | F4R | A | - | TSW | 08/01 ▸ 04/03 | 7700838135 | 731379 | 570 | 377,5 | ALM |
| 2.0 i 16V | JA0/C ; JA1/3/B/L/S | E | 1998 | F4R | A | | TSW | 09/99 ▸ 04/03 | 7700429769 | 732559 | 585 | 377,5 | ALM |
| 1.9 dTi | JA0N | D | 1870 | F9Q | M | +/- | TSW | 09/99 ▸ 03/01 | 7700425842 | 732316 | 585 | 414,5 | ALM |
| 1.9 dTi | JA0N | D | 1870 | F9Q | M | +/- | TSW | 03/01 ▸ 04/03 | 7700429769 | 732559 | 585 | 377,5 | ALM |
| 1.9 dCi,1.9 dTi | JA0/1/5 ; JA1/F/U | D | 1870 | F9Q | M | + | TSW | 09/99 ▸ 04/03 | 7700429769 | 732559 | 585 | 377,5 | ALM |
| 1.9 dCi,1.9 dTi | JA0/1/5/N ; JA1/F/U | D | 1870 | F9Q | M | - | TSW | 09/99 ▸ 04/03 | 7700838135 | 731379 | 570 | 377,5 | ALM |
| 1.9 dCi,1.9 dTi | JA0/5 ; JA1/F/U | D | 1870 | F9Q | M | - | TSW | 01/00 ▸ 04/03 | 7701352605 | 731380 | 585 | 397,5 | ALB |
| 1.9 dTi | JA0N | D | 1870 | F9Q | A | +/- | TSW | 09/99 ▸ 03/01 | 7700425842 | 732316 | 585 | 414,5 | ALM |
| 1.9 dTi | JA0N | D | 1870 | F9Q | A | +/- | TSW | 03/01 ▸ 04/03 | 7700429769 | 732559 | 585 | 377,5 | ALM |
| 1.9 dCi | JA05 | D | 1870 | F9Q | A | + | TSW | 09/99 ▸ 04/03 | 7700429769 | 732559 | 585 | 377,5 | ALM |
| 1.9 dCi,1.9 dTi | JA0/5/N | D | 1870 | F9Q | A | - | TSW | 09/99 ▸ 04/03 | 7700838135 | 731379 | 570 | 377,5 | ALM |

## MODUS (2004>2007)

| | | | | | | | | | | | | | |
|---|---|---|---|---|---|---|---|---|---|---|---|---|---|
| 1.2 i 16V,1.2 i TCE 16V | FP0/C/K ; JP0/C/K/P/S/T/W | E | 1149 | D4F | M | - | | 09/04 ▸ 12/07 | 8200138738 | 732903 | 494 | 403 | ALM |
| 1.4 i 16V | JP0/1/A/J | E | 1390 | K4J | M | - | | 09/04 ▸ 12/07 | 8200365427 | 734246 | 380 | 445 | ALB |
| 1.6 i 16V | JP0/B/L/M/U/V | E | 1598 | K4M | M | - | | 09/04 ▸ | 8200365427 | 734246 | 380 | 445 | ALB |
| 1.6 i 16V | JP0/B/U | E | 1598 | K4M | A | - | | 09/04 ▸ 12/07 | 8200365427 | 734246 | 380 | 445 | ALB |
| 1.5 dCi 105 FAP | JP02 | D | 1461 | K9K | M | +/- | | 03/07 ▸ 12/07 | 8200468913 | 734462 | 492 | 406,3 | ALB |
| 1.5 dCi | FP0/D/E/G ; JP0/8/D/E/F/G/H | D | 1461 | K9K | M | - | | 09/04 ▸ 12/07 | 8200138738 | 732903 | 494 | 403 | ALM |

## MODUS (2008>)

| | | | | | | | | | | | | | |
|---|---|---|---|---|---|---|---|---|---|---|---|---|---|
| 1.2 i 75 16V | JP1C | F | 1149 | D4F | M | - | | 01/09 ▸ | 8200138738 | 732903 | 494 | 403 | ALM |
| 1.2 TCE 100 16V<br>1.2 i 75 16V,1.2 i 80 16V | JP0/C/S/W | E | 1149 | D4F | M | - | | 01/08 ▸ | 8200138738 | 732903 | 494 | 403 | ALM |
| 1.4 i 100 16V | JP1F | E | 1390 | K4J | M | + | | 01/08 ▸ | 8200468913 | 734462 | 492 | 406,3 | ALB |
| 1.4 i 100 16V | JP1F | E | 1390 | K4J | M | - | | 01/08 ▸ | 8200365427 | 734246 | 380 | 445 | ALB |
| 1.6 i 110 16V | JP0B | E | 1598 | K4M | M | - | | 01/08 ▸ | 8200365427 | 734246 | 380 | 445 | ALB |
| 1.6 i 110 16V | JP0B | E | 1598 | K4M | A | - | | 01/08 ▸ | 8200365427 | 734246 | 380 | 445 | ALB |
| 1.5 dCi 105,1.5 dCi 85 | JP0/2/9 | D | 1461 | K9K | M | +/- | | 01/08 ▸ | 8200468913 | 734462 | 492 | 406,3 | ALB |
| 1.5 dCi 105,1.5 dCi 65<br>1.5 dCi 70,1.5 dCi 75<br>1.5 dCi 85,1.5 dCi 90 | JP0/4/F/G/H ; JP1/7/B/D | D | 1461 | K9K | M | - | | 01/08 ▸ | 8200138738 | 732903 | 494 | 403 | ALM |

## SAFRANE

| | | | | | | | | | | | | | |
|---|---|---|---|---|---|---|---|---|---|---|---|---|---|
| 2.0 i 16V | B54L | E | 1948 | N7Q | M | + | TSW | 09/96 ▸ 11/00 | 7701035721 | 730549 | 588 | 460 | ALB |
| 2.0 i 16V | B54L | E | 1948 | N7Q | M | - | TSW | 09/96 ▸ 11/00 | 7701035718 | 730540 | 620 | 377,5 | ALM |
| 2.0 i 16V | B54L | E | 1948 | N7Q | A | - | TSW | 09/96 ▸ 04/00 | 7701352204 | 730549 | 588 | 460 | ALB |
| 2.0 Si,2.0 i | B54/0/2 | E | 1995 | J7R | M | + | TSW | 05/92 ▸ 09/96 | 7701352204 | 730549 | 588 | 460 | ALB |
| 2.0 i | B54E | E | 1995 | J7R | M | + | | 09/92 ▸ 09/96 | 7701035951 | | 589 | 462 | CBS |
| 2.0 Si,2.0 i | B54/0/2/E | E | 1995 | J7R | M | - | TSW | 05/92 ▸ 09/96 | 7701035718 | 730540 | 620 | 377,5 | ALM |
| 2.0 i | B54E | E | 1995 | J7R | M | | TSW | 09/92 ▸ 09/96 | 7701035721 | 730549 | 588 | 460 | ALB |
| 2.0 Si,2.0 i | B54/0/2/E | E | 1995 | J7R | A | + | | 05/92 ▸ 09/96 | 7701035951 | | 589 | 462 | CBS |
| 2.0 Si,2.0 i | B54/0/2/E | E | 1995 | J7R | A | - | | 05/92 ▸ 09/96 | 7701035719 | | 588 | 461 | ALB |
| 2.2 Si,2.2 i | B54/1/3 | E | 2165 | J7T | M | + | TSW | 05/92 ▸ 09/96 | 7701352204 | 730549 | 588 | 460 | ALB |
| 2.2 Si,2.2 i | B54/1/3 | E | 2165 | J7T | M | - | TSW | 05/92 ▸ 09/96 | 7701035718 | 730540 | 620 | 377,5 | ALM |
| 2.2 Si,2.2 i | B54/1/3 | E | 2165 | J7T | A | + | | 05/92 ▸ 09/96 | 7701035951 | | 589 | 462 | CBS |
| 2.2 i | B541 | E | 2165 | J7T | A | + | TSW | 05/92 ▸ 09/96 | 7701035721 | 730549 | 588 | 460 | ALB |
| 2.2 Si,2.2 i | B54/1/3 | E | 2165 | J7T | A | - | | 05/92 ▸ 09/96 | 7701035719 | | 588 | 461 | ALB |
| 2.2 i | B541 | E | 2165 | J7T | A | | TSW | 05/92 ▸ 09/96 | 7701035718 | 730540 | 620 | 377,5 | ALM |
| 2.5 i 20V | B54F | E | 2435 | N7U | M | +/- | | 09/96 ▸ 11/00 | 7701042647 | | 588 | 460 | ALB |
| 2.5 i 20V | B54F | E | 2435 | N7U | A | +/- | | 09/96 ▸ 07/99 | 7701352600 | | 588 | 460 | ALB |
| 3.0 i | B54M | E | 2963 | Z7X | A | +/- | | 09/96 ▸ 12/98 | 7701035720 | | 645 | 461 | ALB |
| 3.0 i V6i Biturbo | B545 | E | 2975 | Z7X | M | + | | 12/93 ▸ 09/96 | 7701037136 | | 645 | 462 | CBS |
| 3.0 i V6,3.0 i V6i | B544 | E | 2975 | Z7X | M | - | | 05/92 ▸ 09/96 | 7701035720 | | 645 | 461 | ALB |
| 3.0 i V6 | B54B | E | 2975 | Z7X | A | + | | 09/92 ▸ 09/96 | 7701037136 | | 645 | 462 | CBS |
| 3.0 i V6 | B54B | E | 2975 | Z7X | A | + | TSW | 09/92 ▸ 09/96 | 7701035723 | 730548 | 589 | 470 | ALB |
| 3.0 i V6 | B54/4/J | E | 2975 | Z7X | A | - | | 05/92 ▸ 09/96 | 7701035720 | | 645 | 461 | ALB |
| 2.1 Dt | B546 | D | 2068 | J8S | M | + | TSW | 05/92 ▸ 09/96 | 7701035723 | 730548 | 589 | 470 | ALB |
| 2.1 Dt | B546 | D | 2068 | J8S | M | - | TSW | 05/92 ▸ 09/96 | 7701352204 | 730549 | 588 | 460 | ALB |
| 2.2 TD | B54G | D | 2188 | G8T | M | + | TSW | 09/96 ▸ 11/00 | 7701352201 | 730548 | 589 | 470 | ALB |

# RENAULT (.../...)

## SAFRANE (.../...)

| Type Ctr. | | CC | | AC | | | | OE | Valeo | DIM. | TECH |
|---|---|---|---|---|---|---|---|---|---|---|---|
| 2.2 TD B54G | D | 2188 | G8T | M | - | TSW | 09/96 ▸ 11/00 | 7701352204 | **730549** | 588 460 | ALB |
| 2.5 Dt B548 | D | 2499 | S8U | M | + | TSW | 04/93 ▸ 09/96 | 7701035723 | **730548** | 589 470 | ALB |
| 2.5 Dt B548 | D | 2499 | S8U | M | - | TSW | 04/93 ▸ 09/96 | 7701352204 | **730549** | 588 460 | ALB |
| 2.5 Dt B548 | D | 2499 | S8U | A | + | TSW | 04/93 ▸ 09/96 | 7701352201 | **730548** | 589 470 | ALB |
| 2.5 Dt B548 | D | 2499 | S8U | A | - | TSW | 04/93 ▸ 09/96 | 7701035721 | **730549** | 588 460 | ALB |

## SCENIC II

| | | | | | | | | | | | |
|---|---|---|---|---|---|---|---|---|---|---|---|
| 1.6 i GPL 16V JM0Y | F | 1598 | K4M | M | +/- | | 05/03 ▸ 07/06 | 8200115541 | **732873** | 451,5 590 | ALM |
| 1.6 i GPL 16V JM0Y | F | 1598 | K4M | M | | | 05/03 ▸ 07/06 | 8200115542 | **732874** | 590 451,5 | ALM |
| 1.6 i GPL 16V JM1Y | F | 1598 | K4M | M | | | 09/06 ▸ 04/09 | 8200115541 | **732873** | 451,5 590 | ALM |
| 1.4 i 16V JM1A ; JM0/B/H | E | 1390 | K4J | M | +/- | | 05/03 ▸ 12/05 | 8200115541 | **732873** | 451,5 590 | ALM |
| 1.4 i 16V JM1S | E | 1390 | K4J | M | | | 10/05 ▸ 09/06 | 8200115541 | **732873** | 451,5 590 | ALM |
| 1.6 i 16V JM0/C/J ; JM1/B/R | E | 1598 | K4M | M | +/- | | 05/03 ▸ 07/08 | 8200115541 | **732873** | 451,5 590 | ALM |
| 1.6 i 16V JM1R | E | 1598 | K4M | M | | | 10/05 ▸ 07/08 | 8200115541 | **732873** | 451,5 590 | ALM |
| 1.6 i 16V JM1B ; JM0/C/J | E | 1598 | K4M | A | +/- | | 05/03 ▸ 12/05 | 8200115542 | **732874** | 590 451,5 | ALM |
| 1.6 i 16V JM1R | E | 1598 | K4M | A | | | 10/05 ▸ 07/08 | 8200115542 | **732874** | 590 451,5 | ALM |
| 2.0 i 16V,2.0 i Turbo 16V JM0/U/W ; JM1/N/T | E | 1998 | F4R | M | +/- | | 05/03 ▸ 07/08 | 8200357536 | **732946** | 589 451 | ALB |
| 2.0 i 16V JM05 ; JM1U | E | 1998 | F4R | M | +/- | | 05/03 ▸ 09/06 | 8200115542 | **732874** | 590 451,5 | ALM |
| 2.0 i 16V JM0U ; JM1N | E | 1998 | F4R | M | | | 05/03 ▸ 07/08 | 8200115542 | **732874** | 590 451,5 | ALM |
| 2.0 i 16V JM0U | E | 1998 | F4R | A | +/- | | 05/03 ▸ 04/09 | 8200357536 | **732946** | 589 451 | ALB |
| 2.0 i 16V JM0/5/U ; JM1/M/N/U | E | 1998 | F4R | A | | | 05/03 ▸ 04/09 | 8200115542 | **732874** | 590 451,5 | ALM |
| 1.5 dCi JM0/2 ; JM2A ; JM1/3 6/E/F | D | 1461 | K9K | M | +/- | | 05/03 ▸ | 8200357536 | **732946** | 589 451 | ALB |
| 1.5 dCi JM0/F/T | D | 1461 | K9K | M | +/- | | 05/03 ▸ 12/05 | 8200115542 | **732874** | 590 451,5 | ALM |
| 1.5 dCi JM1F | D | 1461 | K9K | M | | | 05/05 ▸ 09/06 | 8200115542 | **732874** | 590 451,5 | ALM |
| 1.5 dCi JM16 | D | 1461 | K9K | M | | | 09/06 ▸ 08/09 | 8200357536 | **732946** | 589 451 | ALB |
| 1.5 dCi JM02 | D | 1461 | K9K | A | +/- | | 05/03 ▸ 07/05 | 8200357536 | **732946** | 589 451 | ALB |
| 1.9 dCi JM0/G/L ; JM2C ; JM1 4/5/7/D/G | D | 1870 | F9Q | M | +/- | | 05/03 ▸ 11/09 | 8200115542 | **732874** | 590 451,5 | ALM |
| 1.9 dCi JM0/L ; JM1/2/4/5/7 D | D | 1870 | F9Q | M | +/- | | 05/03 ▸ 11/09 | 8200357536 | **732946** | 589 451 | ALB |
| 1.9 dCi JM0/G ; JM1/2/4/G | D | 1870 | F9Q | M | | | 05/03 ▸ 11/09 | 8200115542 | **732874** | 590 451,5 | ALM |
| 1.9 dCi JM1/4/D | D | 1870 | F9Q | A | +/- | | 05/05 ▸ 11/09 | 8200325007 | **734438** | 629 451,5 | ALB |
| 1.9 dCi JM1/4/D | D | 1870 | F9Q | A | +/- | | 05/05 ▸ 11/09 | 8200357536 | **732946** | 589 451 | ALB |
| 2.0 dCi JM1K | D | 1995 | M9R | M | +/- | | 01/06 ▸ 04/09 | 8200325007 | **734438** | 629 451,5 | ALB |
| 2.0 dCi JM1K | D | 1995 | M9R | M | + | | 01/06 ▸ 04/09 | 8200325007 | **734438** | 629 451,5 | ALB |
| 2.0 dCi JM1K | D | 1995 | M9R | M | | | 01/06 ▸ 04/09 | 8200325007 | **734438** | 629 451,5 | ALB |
| 2.0 dCi JM1K | D | 1995 | M9R | A | +/- | | 01/06 ▸ 04/09 | 8200325007 | **734438** | 629 451,5 | ALB |
| 2.0 dCi JM1K | D | 1995 | M9R | A | | | 01/06 ▸ 04/09 | 8200325007 | **734438** | 629 451,5 | ALB |

## SCENIC III (2009>)

| | | | | | | | | | | | |
|---|---|---|---|---|---|---|---|---|---|---|---|
| 1.6 i 110 16V JZ03 | F | 1598 | K4M | M | + | | 04/09 ▸ | 214100014R | **735184** | 652 488,5 | ALM |
| 1.6 i 110 16V JZ03 ; JZ1Y | F | 1598 | K4M | M | | | 06/09 ▸ | 214100014R | **735184** | 652 488,5 | ALM |
| 1.4 TCE 130 16V JZ0F ; JZ1V | E | 1397 | H4J | M | | | 04/09 ▸ | 214100002R | •**735607** | 629,4 377,5 | ALM |
| 1.6 i 110 16V JZ0/U ; JZ1/B/H | E | 1598 | K4M | M | + | | 04/09 ▸ | 214100014R | **735184** | 652 488,5 | ALM |
| 1.6 i 110 16V JZ0U ; JZ1B | E | 1598 | K4M | M | | | 04/09 ▸ | 214100014R | **735184** | 652 488,5 | ALM |
| 1.5 dCi 105,1.5 dCi 110 JZ0/7/A/B/D ; JZ1/G 1.5 dCi 85 M/W | D | 1461 | K9K | M | + | | 04/09 ▸ | 214100002R | •**735607** | 629,4 377,5 | ALM |
| 1.5 dCi 105,1.5 dCi 110 JZ0/2/7/B/D | D | 1461 | K9K | M | | | 04/09 ▸ | 214100002R | •**735607** | 629,4 377,5 | ALM |
| 1.5 dCi 110 JZ09 | D | 1461 | K9K | A | | | 06/10 ▸ | 214100002R | •**735607** | 629,4 377,5 | ALM |
| 2.0 dCi 160 JZ0L | D | 1995 | M9R | M | + | | 04/09 ▸ | 214100017R | **735181** | 652 430 | ALB |
| 2.0 dCi 160 JZ0L | D | 1995 | M9R | M | | | 04/09 ▸ | 214100017R | **735181** | 652 430 | ALB |
| 2.0 dCi 150 JZ0Y | D | 1995 | M9R | A | + | | 04/09 ▸ | 214100017R | **735181** | 652 430 | ALB |
| 2.0 dCi 150 JZ0Y | D | 1995 | M9R | A | | | 04/09 ▸ | 214100017R | **735181** | 652 430 | ALB |

## SYMBOLE - THALIA (2008>)

| | | | | | | | | | | | |
|---|---|---|---|---|---|---|---|---|---|---|---|
| 1.2 i 16V LU2/U/V/W | E | 1149 | D4F | M | - | TSW | 10/08 ▸ | 7700838134 | **731378** | 430 377,5 | ALM |
| 1.2 i 16V LU2/U/V/W | E | 1149 | D4F | M | | TSW | 10/08 ▸ | 7700428082 | **732621** | 480 414,5 | ALM |
| 1.4 i LU1/7 ; LU3/K/P/S | E | 1390 | K7J | M | + | TSW | 10/08 ▸ | 8200343476 | **732721** | 480 414,5 | ALM |
| 1.4 i LU1/7 ; LU3/K/P/S | E | 1390 | K7J | M | - | TSW | 10/08 ▸ | 7700838134 | **731378** | 430 377,5 | ALM |
| 1.4 i LU3S | E | 1390 | K7J | M | | TSW | 10/08 ▸ | 7700428082 | **732621** | 480 414,5 | ALM |
| 1.4 i 16V LU2/B ; LU3/D/R/T | E | 1390 | K4J | M | | TSW | 10/08 ▸ | 8200343476 | **732721** | 480 414,5 | ALM |
| 1.4 i 16V LU2/B ; LU3/R/T | E | 1390 | K4J | A | | TSW | 10/08 ▸ | 8200343476 | **732721** | 480 414,5 | ALM |
| 1.6 i,1.6 i 16V LU0/0/2/5/6/7 LU2M ; LU1/8/A/B/V | E | 1598 | K4M,K7M | M | + | TSW | 10/08 ▸ | 8200343476 | **732721** | 480 414,5 | ALM |
| 1.6 i 16V LU0/6 ; LU1/8/V | E | 1598 | K4M | M | - | TSW | 10/08 ▸ | 7700838134 | **731378** | 430 377,5 | ALM |
| 1.6 i,1.6 i 16V LU18 ; LU0/0/2/5/7 | E | 1598 | K4M,K7M | M | - | TSW | 10/08 ▸ | 8200049077 | **732765** | 430 377,5 | ALM |
| 1.6 i 16V LU2M ; LU1/A/B | E | 1598 | K4M | M | | TSW | 10/08 ▸ | 7700838134 | **731378** | 430 377,5 | ALM |
| 1.6 i 16V LU0/1 ; LU2M ; LU1/A B | E | 1598 | K4M | A | + | TSW | 10/08 ▸ | 8200343476 | **732721** | 480 414,5 | ALM |

Radiator Radiateur Motorkühler Radiatore di raffreddamento Radiator Radyatör Radiador Радиатор vízhűtő Vodní chladič Radiator Ψυγείο



• **New** Nouveau **Nuevo** Novo **Nuovo** Nieuw **Neu** Nowość **Yeni** Новый Νέο **Novy**

# RENAULT (.../...)

## SYMBOLE - THALIA (2008>) (.../...)

| | | | CC | | | AC | | | | Valeo | DIM. | | TECH |
|---|---|---|---|---|---|---|---|---|---|---|---|---|---|
| 1.6 i 16V | LU0/1 ; LU2M ; LU1/A B | E | 1598 | K4M | A | - | TSW | 10/08 ▸ | 7700838134 | 731378 | 430 | 377,5 | ALM |
| 1.5 dCi | LU1/W ; LU2/4/5 | D | 1461 | K9K | M | + | TSW | 10/08 ▸ | 8200343476 | 732721 | 480 | 414,5 | ALM |
| 1.5 dCi | LU3/M/N | D | 1461 | K9K | M | - | | 10/08 ▸ | 8200245596 | 732960 | 479 | 414 | ALB |
| 1.5 dCi | LU1/W ; LU2/4/5 | D | 1461 | K9K | M | | TSW | 10/08 ▸ | 7700838134 | 731378 | 430 | 377,5 | ALM |

## THALIA (2001>2008)

| | | | | | | | | | | | | | |
|---|---|---|---|---|---|---|---|---|---|---|---|---|---|
| 1.4 i,1.4 i 16V | LB0/B/P | E | 1390 | K4J,K7J | M | - | TSW | 01/01 ▸ | 7700838134 | 731378 | 430 | 377,5 | ALM |
| 1.6 i 16V | LB1V | E | 1598 | K4M | M | - | TSW | 01/01 ▸ | 7700838134 | 731378 | 430 | 377,5 | ALM |
| 1.5 dCi | LB07 | D | 1461 | K9K | M | - | TSW | 01/01 ▸ | 7700838134 | 731378 | 430 | 377,5 | ALM |

## THALIA (2008>)

| | | | | | | | | | | | | | |
|---|---|---|---|---|---|---|---|---|---|---|---|---|---|
| 1.2 i 16V | LB2U | E | 1149 | D4F | M | + | TSW | 10/08 ▸ | 7700428082 | 732621 | 480 | 414,5 | ALM |
| 1.2 i 16V | LB2U | E | 1149 | D4F | M | | TSW | 10/08 ▸ | 7700838134 | 731378 | 430 | 377,5 | ALM |
| 1.4 i 16V | LB3D | E | 1390 | K4J | M | + | TSW | 10/08 ▸ | 8200343476 | 732721 | 480 | 414,5 | ALM |
| 1.4 i 16V | LB3D | E | 1390 | K4J | M | - | TSW | 10/08 ▸ | 7700838134 | 731378 | 430 | 377,5 | ALM |
| 1.4 i 16V | LB3D | E | 1390 | K4J | A | + | TSW | 10/08 ▸ | 8200343476 | 732721 | 480 | 414,5 | ALM |
| 1.4 i 16V | LB3D | E | 1390 | K4J | A | - | TSW | 10/08 ▸ | 7700838134 | 731378 | 430 | 377,5 | ALM |
| 1.6 i 16V | LB01 | E | 1598 | K4M | A | + | TSW | 10/08 ▸ | 8200343476 | 732721 | 480 | 414,5 | ALM |
| 1.5 dCi | LB3/M/N | D | 1461 | K9K | M | + | | 10/08 ▸ | 8200245596 | 732960 | 479 | 414 | ALB |

## TWINGO I (93>98)

| | | | | | | | | | | | | | |
|---|---|---|---|---|---|---|---|---|---|---|---|---|---|
| 1.2 i | S066 ; C06/6/7 | E | 1149 | D7F | M | + | TSW | 07/96 ▸ 08/98 | 7701045211 | 732819 | 430 | 395 | CBS |
| 1.2 i | S066 ; C06/6/7 | E | 1149 | D7F | M | - | TSW | 07/96 ▸ 10/97 | 7701042436 | 731552 | 430 | 377 | ALM |
| 1.2 i | S066 ; C06/6/7 | E | 1149 | D7F | M | - | TSW | 10/97 ▸ 08/98 | 7701045212 | 732051 | 430 | 377,5 | ALM |
| 1.2 i | C067 | E | 1149 | D7F | M | | TSW | 07/96 ▸ 08/98 | 7701045212 | 732051 | 430 | 377,5 | ALM |
| 1.2 i | S066 ; C06/6/7 | E | 1149 | D7F | A | + | TSW | 07/96 ▸ 08/98 | 7701045211 | 732819 | 430 | 395 | CBS |
| 1.2 i | S066 ; C06/6/7 | E | 1149 | D7F | A | - | TSW | 07/96 ▸ 09/97 | 7701042436 | 731552 | 430 | 377 | ALM |
| 1.2 i | S066 ; C06/6/7 | E | 1149 | D7F | A | - | TSW | 10/97 ▸ 08/98 | 7701499800 | 732051 | 430 | 377,5 | ALM |
| 1.2 | C06/3/4 ; S06/3/4 | E | 1239 | C3G | M | + | TSW 819745 | 03/93 ▸ 01/97 | 7701352366 | 730969 | 430 | 396 | CBS |
| 1.2 | C06/3/4 ; S06/3/4 | E | 1239 | C3G | M | - | TSW 819745 | 03/93 ▸ 12/96 | 7701036152 | 730633 | 430 | 377,5 | ALM |
| 1.2 | C06/3/4 | E | 1239 | C3G | M | - | TSW 819745 | 03/93 ▸ 12/96 | 7701352365 | 730633 | 430 | 377,5 | ALM |
| 1.2 | S064 | E | 1239 | C3G | M | | TSW 819745 | 08/94 ▸ 12/96 | 7701036152 | 730633 | 430 | 377,5 | ALM |
| 1.2 | S06/3/4 | E | 1239 | C3G | M | | TSW 819745 | 08/94 ▸ 12/96 | 7701352365 | 730633 | 430 | 377,5 | ALM |

## TWINGO II (98>2007)

| | | | | | | | | | | | | | |
|---|---|---|---|---|---|---|---|---|---|---|---|---|---|
| 1.2 i GPL | C066 ; S066 | G | 1149 | D7F | M | + | TSW | 10/98 ▸ 08/04 | 7701499801 | 732819 | 430 | 395 | CBS |
| 1.2 i GPL | S066 ; C06/6/G | G | 1149 | D7F | M | - | TSW | 10/98 ▸ 06/07 | 7701045212 | 732051 | 430 | 377,5 | ALM |
| 1.2 i GPL | S06G | G | 1149 | D7F | M | | TSW | 09/04 ▸ 06/07 | 7701045211 | 732819 | 430 | 395 | CBS |
| 1.2 i,1.2 i 16V | C06/6/8/C/D/G/H/K S06/6/8/C/K | E | 1149 | D4F,D7F | M | + | TSW | 09/98 ▸ 06/07 | 7701045211 | 732819 | 430 | 395 | CBS |
| 1.2 i,1.2 i 16V | C06/0/1/2/6/8/C/D/G H/K/W ; S06/6/8/C/K | E | 1149 | D4F,D7F | M | - | TSW | 09/98 ▸ 06/07 | 7701045212 | 732051 | 430 | 377,5 | ALM |
| 1.2 i | C066 | E | 1149 | D7F | A | + | TSW | 09/98 ▸ 08/04 | 7701499801 | 732819 | 430 | 395 | CBS |
| 1.2 i | C066 | E | 1149 | D7F | A | - | TSW | 09/98 ▸ 08/04 | 7701499800 | 732051 | 430 | 377,5 | ALM |

## TWINGO III (2007>)

| | | | | | | | | | | | | | |
|---|---|---|---|---|---|---|---|---|---|---|---|---|---|
| 1.2 i,1.2 i 16V | CN0/A/D/K/V | E | 1149 | D4F,D7F | M | + | | 07/07 ▸ | 8200448553 | 735135 | 403 | 494 | ALM |
| 1.2 i,1.2 i 16V | CN0/A/D/K/V | E | 1149 | D4F,D7F | M | - | | 07/07 ▸ | 8200448552 | 735134 | 404 | 493 | ALM |
| 1.2 i,1.2 i 16V | CN0/A/D/K/V | E | 1149 | D4F,D7F | M | - | | 07/07 ▸ | 8200369307 | 735135 | 403 | 494 | ALM |
| 1.6 i 16V | CN0R | E | 1598 | K4M | M | + | | 06/08 ▸ | 8200448553 | 735135 | 403 | 494 | ALM |
| 1.6 i 16V | CN0R | E | 1598 | K4M | M | - | | 06/08 ▸ | 8200448552 | 735134 | 404 | 493 | ALM |
| 1.6 i 16V | CN0/R/S | E | 1598 | K4M | M | - | | 06/08 ▸ | 8200369307 | 735135 | 403 | 494 | ALM |
| 1.5 dCi | CN0E | D | 1461 | K9K | M | - | | 07/07 ▸ | 8200448552 | 735134 | 404 | 493 | ALM |
| 1.5 dCi | CN0E ; GN0E | D | 1461 | K9K | M | - | | 07/07 ▸ | 8200369307 | 735135 | 403 | 494 | ALM |

## VEL SATIS (2002>2005)

| | | | | | | | | | | | | | |
|---|---|---|---|---|---|---|---|---|---|---|---|---|---|
| 2.0 i Turbo 16V | BJ0/K/P | E | 1998 | F4R | M | + | | 01/02 ▸ 01/05 | 8200302463 | 732828 | 675 | 414,5 | ALM |
| 2.0 i Turbo 16V | BJ0K | E | 1998 | F4R | M | | | 01/02 ▸ | 8200008765 | 732828 | 675 | 414,5 | ALM |
| 2.0 i Turbo 16V | BJ0/K/P | E | 1998 | F4R | A | + | | 01/02 ▸ 01/05 | 8200302463 | 732828 | 675 | 414,5 | ALM |
| 2.0 i Turbo 16V | BJ0K | E | 1998 | F4R | A | | | 01/02 ▸ | 8200008765 | 732828 | 675 | 414,5 | ALM |
| 3.5 i V6 24V | BJ0/U/V | E | 3498 | V4Y | A | + | | 01/02 ▸ 01/05 | 8200008766 | | 680 | 398 | ALB |
| 3.5 i V6 24V | BJ0V | E | 3498 | V4Y | A | | | 01/02 ▸ | 8200008765 | 732828 | 675 | 414,5 | ALM |
| 2.2 dCi 16V | BJ0/E/F/G/M | D | 2188 | G9T | M | + | | 01/02 ▸ 01/05 | 8200302463 | 732828 | 675 | 414,5 | ALM |
| 2.2 dCi 16V | BJ0H | D | 2188 | G9T | M | | | 01/02 ▸ 01/05 | 8200033729 | 734728 | 680 | 438 | ALB |
| 2.2 dCi 16V | BJ0/E/H/M | D | 2188 | G9T | M | | | 01/02 ▸ 01/05 | 8200302463 | 732828 | 675 | 414,5 | ALM |
| 2.2 dCi 16V | BJ0/E/M | D | 2188 | G9T | M | | | 01/02 ▸ | 8200008765 | 732828 | 675 | 414,5 | ALM |
| 2.2 dCi 16V | BJ0F | D | 2188 | G9T | A | + | | 01/02 ▸ 01/05 | 8200302463 | 732828 | 675 | 414,5 | ALM |
| 2.2 dCi 16V | BJ0/F/H | D | 2188 | G9T | A | | | 01/02 ▸ 01/05 | 8200033729 | 734728 | 680 | 438 | ALB |

| | Type Ctr. | | CC | | | AC | | 2+3 | OE | Valeo | DIM. | TECH |
|---|---|---|---|---|---|---|---|---|---|---|---|---|
| **RENAULT** (.../...) | | | | | | | | | | | | |
| **VEL SATIS (2002>2005) (.../...)** | | | | | | | | | | | | |
| 3.0 dCi V6 24V | BJ0J | D | 2958 | P9X | A | | | 01/02 ▸ 01/05 | 8200033729 | **734728** | 680 438 | ALB |
| **VEL SATIS (2005>)** | | | | | | | | | | | | |
| 2.0 i Turbo 16V | BJ0W | E | 1998 | F4R | M | + | | 02/05 ▸ | 8200302463 | **732828** | 675 414,5 | ALM |
| 2.0 i Turbo 16V | BJ0W | E | 1998 | F4R | A | + | | 02/05 ▸ | 8200302463 | **732828** | 675 414,5 | ALM |
| 3.5 i V6 24V | BJ0V | E | 3498 | V4Y | A | + | | 02/05 ▸ 12/05 | 8200008766 | | 680 398 | ALB |
| 3.5 i V6 24V | BJ0/1/V | E | 3498 | V4Y | A | | | 12/05 ▸ | 8200008766 | | 680 398 | ALB |
| 2.2 dCi 16V | BJ0M | D | 2188 | G9T | M | + | | 02/05 ▸ 12/05 | 8200302463 | **732828** | 675 414,5 | ALM |
| 2.2 dCi 16V | BJ0H | D | 2188 | G9T | M | + | | 03/05 ▸ 11/05 | 8200033729 | **734728** | 680 438 | ALB |
| 2.2 dCi 16V | BJ0F | D | 2188 | G9T | A | + | | 02/05 ▸ 07/06 | 8200302463 | **732828** | 675 414,5 | ALM |
| 2.2 dCi 16V | BJ0F | D | 2188 | G9T | A | | | 02/05 ▸ 07/06 | 8200033729 | **734728** | 680 438 | ALB |
| 3.0 dCi V6 24V | BJ0J | D | 2958 | P9X | A | + | | 02/05 ▸ | 8200033729 | **734728** | 680 438 | ALB |
| **RENAULT** | | | | | | | | | | | | |
| **EXPRESS (85>91)** | | | | | | | | | | | | |
| 1.0 | F400 | E | 956 | C1C | M | | TSW | 09/85 ▸ 08/91 | 7700773968 | **883959** | 360 370 | ALM |
| 1.1 | F40/1/H | E | 1108 | C1E | M | | TSW | 09/85 ▸ 08/91 | 7700773968 | **883959** | 360 370 | ALM |
| 1.4,1.4 i | F40/2/7/M | E | 1397 | C1J,C2J,C3J | M | | TSW | 09/85 ▸ 08/91 | 7700773968 | **883959** | 360 370 | ALM |
| 1.6 D | F404 | D | 1595 | F8M | M | | TSW | 09/85 ▸ 08/91 | 7700773700 | **810851** | 390 397,5 | ALB |
| **EXPRESS (91>2003)** | | | | | | | | | | | | |
| 1.1 | F40/1/T | E | 1108 | C1E | M | | TSW | 09/91 ▸ 08/97 | 6006000710 | **816655** | 390 377,5 | ALM |
| 1.2 | F40F | E | 1237 | C1G | M | - | TSW 819745 | 09/91 ▸ 08/94 | 7701047888 | **730499** | 430 377,5 | ALM |
| 1.2 | F40F | E | 1237 | C1G | M | | TSW 819745 | 09/91 ▸ 08/94 | 6006000709 | **730499** | 430 377,5 | ALM |
| 1.2 | F40F | E | 1237 | C1G | M | | TSW | 09/91 ▸ 08/94 | 6006000710 | **816655** | 390 377,5 | ALM |
| 1.2 i | F406 | E | 1239 | C3G | M | - | TSW 819745 | 07/93 ▸ 08/97 | 7701047888 | **730499** | 430 377,5 | ALM |
| 1.2 i | F406 | E | 1239 | C3G | M | | TSW 819745 | 07/93 ▸ 08/97 | 6006000709 | **730499** | 430 377,5 | ALM |
| 1.2 i | G40A | E | 1239 | C3G | M | | TSW 819745 | 08/97 ▸ 02/03 | 7701047888 | **730499** | 430 377,5 | ALM |
| 1.4,1.4 i | F40/A/S/U/Y | E | 1390 | E6J,E7J | M | + | TSW 819745 | 09/91 ▸ 08/97 | 7700806575 | **730181** | 432 399 | CBS |
| 1.4,1.4 i | F40/A/D/S/U/V | E | 1390 | E6J,E7J | M | + | TSW | 09/91 ▸ 08/97 | 7701047886 | **816658** | 430 377,5 | ALM |
| 1.4 i | F40/S/U | E | 1390 | E7J | A | + | TSW | 09/91 ▸ 08/97 | 7701047886 | **816658** | 430 377,5 | ALM |
| 1.4 i | F40/S/U | E | 1390 | E7J | A | + | TSW 819745 | 09/91 ▸ 08/97 | 7700806575 | **730181** | 432 399 | CBS |
| 1.4 i | F407 | E | 1397 | C3J | M | | TSW | 09/91 ▸ 08/94 | 7700805486 | **816655** | 390 377,5 | ALM |
| 1.6 D | F404 | D | 1595 | F8M | M | - | TSW | 09/91 ▸ 08/94 | 6006000712 | **730502** | 462 415 | ALB |
| 1.9 D | F40/E/N/P/R | D | 1870 | F8Q | M | - | TSW | 09/91 ▸ 08/97 | 6006000712 | **730502** | 462 415 | ALB |
| 1.9 D | G40/B/C | D | 1870 | F8Q | M | | TSW | 08/96 ▸ 02/03 | 6006000712 | **730502** | 462 415 | ALB |
| **EXTRA (85>91)** | | | | | | | | | | | | |
| 1.0 | F400 | E | 956 | C1C | M | | TSW | 09/85 ▸ 08/91 | 7700773968 | **883959** | 360 370 | ALM |
| 1.1 | F401 | E | 1108 | C1E | M | | TSW | 09/85 ▸ 08/91 | 7700773968 | **883959** | 360 370 | ALM |
| 1.4 | F402 | E | 1397 | C1J | M | | TSW | 09/85 ▸ 08/91 | 7700773968 | **883959** | 360 370 | ALM |
| 1.6 D | F404 | D | 1595 | F8M | M | - | TSW | 09/85 ▸ 08/91 | 7700773700 | **810851** | 390 397,5 | ALB |
| **EXTRA (91>97)** | | | | | | | | | | | | |
| 1.2 | F40F | E | 1237 | C1G | M | - | TSW 819745 | 09/91 ▸ 08/94 | 7701047888 | **730499** | 430 377,5 | ALM |
| 1.2 | F40F | E | 1237 | C1G | M | | TSW 819745 | 09/91 ▸ 08/94 | 6006000709 | **730499** | 430 377,5 | ALM |
| 1.2 i | F406 | E | 1239 | C3G | M | - | TSW 819745 | 09/94 ▸ 08/97 | 7701047888 | **730499** | 430 377,5 | ALM |
| 1.2 i | F406 | E | 1239 | C3G | M | | TSW 819745 | 09/94 ▸ 08/97 | 6006000709 | **730499** | 430 377,5 | ALM |
| 1.4,1.4 i | F40/A/U | E | 1390 | E6J,E7J | M | + | TSW 819745 | 09/91 ▸ 08/97 | 7700806575 | **730181** | 432 399 | CBS |
| 1.4,1.4 i | F40/A/U | E | 1390 | E6J,E7J | M | - | TSW | 09/91 ▸ 08/97 | 7701047886 | **816658** | 430 377,5 | ALM |
| 1.6 D | F404 | D | 1595 | F8M | M | - | TSW | 09/91 ▸ 08/94 | 6006000712 | **730502** | 462 415 | ALB |
| 1.6 D | F404 | D | 1595 | F8M | M | - | TSW | 09/91 ▸ 08/94 | 6006000711 | | 431 390 | CBS |
| 1.9 D | F40/E/N/R | D | 1870 | F8Q | M | | TSW | 09/91 ▸ 08/97 | 6006000712 | **730502** | 462 415 | ALB |
| **KANGOO EXTRA (98>2003)** | | | | | | | | | | | | |
| 1.2 i | FC0A | E | 1149 | D7F | M | + | type Calsonic | 01/98 ▸ 02/03 | 7700417175 | **732474** | 480 390 | ALB |
| 1.2 i | FC0A | E | 1149 | D7F | M | + | TSW | 01/98 ▸ 02/99 | 7700430143 | **732387** | 480 395,2 | ALB |
| 1.2 i | FC0A | E | 1149 | D7F | M | + | TSW | 02/99 ▸ 02/03 | 7700430648 | **732387** | 480 395,2 | ALB |
| 1.2 i | FC0A | E | 1149 | D7F | M | - | TSW | 01/98 ▸ | 7700836301 | **731378** | 430 377,5 | ALM |
| 1.2 i | FC0A | E | 1149 | D7F | M | | TSW | 01/98 ▸ 02/99 | 7700838134 | **731378** | 430 377,5 | ALM |
| 1.2 i | FC0A | E | 1149 | D7F | M | | TSW | 02/99 ▸ 02/03 | 7700314382 | **732389** | 430 377,5 | ALM |
| 1.4 i | FC0C | E | 1390 | E7J | M | + | type Calsonic | 01/98 ▸ 02/03 | 7700417175 | **732474** | 480 390 | ALB |
| 1.4 i | FC0C | E | 1390 | E7J | M | - | TSW | 01/98 ▸ | 7700836301 | **731378** | 430 377,5 | ALM |
| 1.4 i | FC0C | E | 1390 | E7J | M | | TSW | 01/98 ▸ 02/03 | 7700838134 | **731378** | 430 377,5 | ALM |
| 1.9 D | FC0E | D | 1870 | F8Q | M | + | | 01/98 ▸ 02/03 | 8200330848 | **732072** | 480 441 | CBS |
| 1.9 D | FC0E | D | 1870 | F8Q | M | + | | 01/98 ▸ | 7700301171 | **732072** | 480 441 | CBS |
| 1.9 DTi | FC0U | D | 1870 | F9Q | M | + | type Calsonic | 01/98 ▸ 02/03 | 7700417175 | **732474** | 480 390 | ALB |
| 1.9 D | FC0E | D | 1870 | F8Q | M | - | | 01/98 ▸ 02/03 | 7700312858 | **731910** | 479 442,2 | ALB |

Radiator Ψυγείο Vodní chladič Radiator vízhűtő Радиатор Radiador Radiator Radyatör Radiator Radiatore di raffreddamento Motorkühler Radiateur



• **New** Nouveau **Nuevo** Novo **Nuovo** Nieuw **Neu** Nowość **Yeni** Новый Νέο **Novy**

## KANGOO EXTRA (98>2003) (.../...)

| Type Ctr. | | CC | | | AC | | | OE | Valeo | DIM. | TECH |
|---|---|---|---|---|---|---|---|---|---|---|---|
| 1.9 D | FC0E | D | 1870 | F8Q | M | - | | 01/98 ▸ | 7700304932 | 731910 | 479 442,2 | ALB |
| 1.9 D | FC0D | D | 1870 | F8Q | M | | | 01/98 ▸ 03/00 | 7701352898 | 731910 | 479 442,2 | ALB |
| 1.9 DTi | FC0U | D | 1870 | F9Q | M | | type Calsonic | 01/98 ▸ 03/00 | 7700417175 | 732474 | 480 390 | ALB |
| 1.9 DTi | FC0U | D | 1870 | F9Q | M | | TSW | 03/00 ▸ 02/03 | 7700428082 | 732621 | 480 414,5 | ALM |
| 1.9 D | FC0D | D | 1870 | F8Q | M | | TSW | 03/00 ▸ 02/03 | 7700428658 | 732720 | 480 414,5 | ALM |

## KANGOO (97>2003)

| Type Ctr. | | CC | | | AC | | | OE | Valeo | DIM. | TECH |
|---|---|---|---|---|---|---|---|---|---|---|---|
| 1.2 i | FC0A ; KC0A | E | 1149 | D7F | M | + | TSW | 09/97 ▸ 02/99 | 7700430143 | 732387 | 480 395,2 | ALB |
| 1.2 i | KC0A | E | 1149 | D7F | M | + | type Calsonic | 03/98 ▸ 02/03 | 7700417175 | 732474 | 480 390 | ALB |
| 1.2 i | FC0A ; KC0A | E | 1149 | D7F | M | + | TSW | 02/99 ▸ 02/03 | 7700430648 | 732387 | 480 395,2 | ALB |
| 1.2 i<br>000303 ▸ | FC0A ; KC0A | E | 1149 | D7F | M | + | TSW | 03/00 ▸ 02/03 | 7700430784 | 732523 | 480 414,5 | ALM |
| 1.2 i | FC0A ; KC0A | E | 1149 | D7F | M | - | TSW | 09/97 ▸ 02/99 | 7700838134 | 731378 | 430 377,5 | ALM |
| 1.2 i<br>990205 ▸ | FC0A ; KC0A | E | 1149 | D7F | M | - | TSW | 02/99 ▸ 02/03 | 7700314382 | 732389 | 430 377,5 | ALM |
| 1.4 i | FC0C ; KC0C | E | 1390 | E7J | M | + | type Calsonic | 09/97 ▸ 02/03 | 7700417175 | 732474 | 480 390 | ALB |
| 1.4 i | FC0H ; KC0H | E | 1390 | E7J | M | + | TSW | 02/99 ▸ 02/03 | 7700430648 | 732387 | 480 395,2 | ALB |
| 1.4 i<br>000303 ▸ | FC0H ; KC0H | E | 1390 | E7J | M | + | TSW | 03/00 ▸ 02/03 | 8200343476 | 732721 | 480 414,5 | ALM |
| 1.4 i<br>000303 ▸ | FC0H ; KC0H | E | 1390 | E7J | M | + | TSW | 03/00 ▸ | 8200033831 | 732721 | 480 414,5 | ALM |
| 1.4 i | FC0H ; KC0H | E | 1390 | E7J | M | - | TSW | 02/99 ▸ 02/03 | 7700838134 | 731378 | 430 377,5 | ALM |
| 1.4 i | FC0C ; KC0C | E | 1390 | E7J | M | | TSW | 09/97 ▸ 02/03 | 7700838134 | 731378 | 430 377,5 | ALM |
| 1.4 i | KC0H | E | 1390 | E7J | A | + | TSW | 10/99 ▸ 02/03 | 7700430648 | 732387 | 480 395,2 | ALB |
| 1.4 i<br>000303 ▸ | KC0H | E | 1390 | E7J | A | + | TSW | 03/00 ▸ 02/03 | 8200343476 | 732721 | 480 414,5 | ALM |
| 1.4 i<br>000303 ▸ | KC0H | E | 1390 | E7J | A | + | TSW | 03/00 ▸ | 8200033831 | 732721 | 480 414,5 | ALM |
| 1.4 i | KC0H | E | 1390 | E7J | A | - | TSW | 10/99 ▸ 02/03 | 7700838134 | 731378 | 430 377,5 | ALM |
| 1.6 i | FC00 ; KC00 | E | 1598 | K7M | M | +/- | TSW | 12/99 ▸ 02/03 | 7700430143 | 732387 | 480 395,2 | ALB |
| 1.6 i 16V | FC0/P/S ; KC0/P/S | E | 1598 | K4M | M | + | | 01/02 ▸ 02/03 | 8200072713 | 732717 | 460 470 | ALM |
| 1.6 i 16V | FC0/P/S ; KC0/P/S | E | 1598 | K4M | M | - | TSW | 01/02 ▸ 02/03 | 7700428082 | 732621 | 480 414,5 | ALM |
| 1.9 dCi | FC0V ; KC0V | D | 1870 | F9Q | M | +/- | | 01/02 ▸ 02/03 | 8200072713 | 732717 | 460 470 | ALM |
| 1.9 D | FC0/D/E/J ; KC0/E/J | D | 1870 | F8Q | M | + | | 09/97 ▸ 02/03 | 8200330848 | 732072 | 480 441 | CBS |
| 1.9 D | KC0E ; FC0/D/E | D | 1870 | F8Q | M | + | | 09/97 ▸ | 7700301171 | 732072 | 480 441 | CBS |
| 1.9 DTi | FC0U ; KC0U | D | 1870 | F9Q | M | + | TSW | 12/99 ▸ 02/03 | 7700430143 | 732387 | 480 395,2 | ALB |
| 1.9 D | FC0/D/E/J ; KC0/D/E/J | D | 1870 | F8Q | M | - | | 09/97 ▸ 02/03 | 7701352898 | 731910 | 479 442,2 | ALB |
| 1.9 D | FC0/D/E ; KC0/D/E | D | 1870 | F8Q | M | - | | 09/97 ▸ 02/03 | 7700312858 | 731910 | 479 442,2 | ALB |
| 1.9 DTi<br>000303 ▸ | FC0U ; KC0U | D | 1870 | F9Q | M | - | TSW | 03/00 ▸ 02/03 | 7700428082 | 732621 | 480 414,5 | ALM |
| 1.9 D | FC0D ; KC0D | D | 1870 | F8Q | M | | | 09/97 ▸ 03/00 | 7701352898 | 731910 | 479 442,2 | ALB |
| 1.9 DTi | FC0U ; KC0U | D | 1870 | F9Q | M | | TSW | 12/99 ▸ 02/03 | 7700838134 | 731378 | 430 377,5 | ALM |
| 1.9 D | FC0D ; KC0D | D | 1870 | F8Q | M | | TSW | 03/00 ▸ 02/03 | 7700428658 | 732720 | 480 414,5 | ALM |
| 1.9 DTi | FC0U ; KC0U | D | 1870 | F9Q | M | - | type Calsonic | 12/99 ▸ 03/00 | 7700417175 | 732474 | 480 390 | ALB |

## KANGOO (2003>2009)

| Type Ctr. | | CC | | | AC | | | OE | Valeo | DIM. | TECH |
|---|---|---|---|---|---|---|---|---|---|---|---|
| - | FC0Z ; KC0Z | L | - | 5DC,5EE | A | - | | 03/03 ▸ | 7700312858 | 731910 | 479 442,2 | ALB |
| - | FC0Z ; KC0Z | L | - | 5DC,5EE | A | - | | 03/03 ▸ 12/05 | 7701352898 | 731910 | 479 442,2 | ALB |
| 1.2 i GPL | FC0A ; KC0A | G | 1149 | D7F | M | + | TSW | 03/03 ▸ 09/07 | 7700430784 | 732523 | 480 414,5 | ALM |
| 1.2 i GPL | FC0A ; KC0A | G | 1149 | D7F | M | - | TSW | 03/03 ▸ 09/07 | 7701499975 | 732389 | 430 377,5 | ALM |
| 1.2 i GPL | KC0A | G | 1149 | D7F | M | | | 03/03 ▸ 09/07 | 8200072713 | 732717 | 460 470 | ALM |
| 1.2 i GPL | KC0A | G | 1149 | D7F | M | | TSW | 03/03 ▸ 09/07 | 8200343476 | 732721 | 480 414,5 | ALM |
| 1.6 i GNV 16V | KC0S ; KC1 ; FC0/S | F | 1598 | K4M | M | + | | 06/05 ▸ 12/07 | 8200072713 | 732717 | 460 470 | ALM |
| 1.6 i GNV 16V | KC0S ; KC1 ; FC0/S | F | 1598 | K4M | M | - | TSW | 06/05 ▸ 12/07 | 7700428082 | 732621 | 480 414,5 | ALM |
| 1.2 i 16V | FC0/5/T/W ; KC0/5/T W | E | 1149 | D4F | M | + | | 03/03 ▸ 12/07 | 8200072713 | 732717 | 460 470 | ALM |
| 1.2 i | FC0/1/A/F ; KC0/1/A/F | E | 1149 | D7F | M | + | TSW | 03/03 ▸ 12/05 | 7700430784 | 732523 | 480 414,5 | ALM |
| 1.2 i | FC0/1/A/F ; KC0/1/A/F/K | E | 1149 | D7F | M | + | TSW | 03/03 ▸ 12/05 | 7711134331 | 732523 | 480 414,5 | ALM |
| 1.2 i | KC0K | E | 1149 | D7F | M | - | TSW | 03/03 ▸ 12/05 | 7700430784 | 732523 | 480 414,5 | ALM |
| 1.2 i | FC0/1/A/F ; KC0/1/A/F/K | E | 1149 | D7F | M | - | TSW | 03/03 ▸ 12/05 | 7700314382 | 732389 | 430 377,5 | ALM |
| 1.2 i 16V | FC0/5/T/W ; KC0/5/T W | E | 1149 | D4F | M | - | TSW | 03/03 ▸ 12/07 | 7700838134 | 731378 | 430 377,5 | ALM |
| 1.2 i 16V | FC1/D ; KC0/5/T/W | E | 1149 | D4F | M | - | TSW | 03/03 ▸ 12/07 | 8200343476 | 732721 | 480 414,5 | ALM |
| 1.2 i | KC0K | E | 1149 | D7F | M | | TSW | 03/03 ▸ 12/05 | 7700430143 | 732387 | 480 395,2 | ALB |
| 1.4 i | FC0/B/M ; KC0/B/M | E | 1390 | K7J | M | + | TSW | 03/03 ▸ 12/03 | 8200343476 | 732721 | 480 414,5 | ALM |
| 1.4 i | FC0/B/M ; KC0/B/M | E | 1390 | K7J | M | + | TSW | 03/03 ▸ | 8200033831 | 732721 | 480 414,5 | ALM |
| 1.4 i | FC0/B/M ; KC0/B/M | E | 1390 | K7J | M | - | TSW | 03/03 ▸ 12/03 | 7700838134 | 731378 | 430 377,5 | ALM |
| 1.4 i | FC0/B/M ; KC0/B/M | E | 1390 | K7J | A | + | TSW | 03/03 ▸ 12/03 | 8200343476 | 732721 | 480 414,5 | ALM |
| 1.4 i | FC0/B/M ; KC0/B/M | E | 1390 | K7J | A | + | TSW | 03/03 ▸ | 8200033831 | 732721 | 480 414,5 | ALM |
| 1.4 i | FC0/B/M ; KC0/B/M | E | 1390 | K7J | A | - | TSW | 03/03 ▸ 12/03 | 7700838134 | 731378 | 430 377,5 | ALM |

# RENAULT (.../...)

## KANGOO (2003>2009) (.../...)

| | | | CC | | | AC | | | OE | Valeo | DIM. | TECH |
|---|---|---|---|---|---|---|---|---|---|---|---|---|
| 1.6 i 16V | FC1N ; FC0/L/P/S KC1N ; KC0/L/P/S | E | 1598 | K4M | M | - | TSW | 03/03 ▸ 12/07 | 7700428082 | **732621** | 480 414,5 | ALM |
| 1.6 i 16V | FC1N ; FC0/L/P/S | E | 1598 | K4M | M | - | TSW | 03/03 ▸ 12/07 | 7700314382 | **732389** | 430 377,5 | ALM |
| 1.6 i 16V | FC1N ; FC0/L/S KC1N ; KC0/L/S | E | 1598 | K4M | A | + | | 03/03 ▸ 12/07 | 8200072713 | **732717** | 460 470 | ALM |
| 1.6 i 16V | FC1N ; FC0/L/S KC1N ; KC0/L/S | E | 1598 | K4M | A | - | TSW | 03/03 ▸ 12/07 | 7700428082 | **732621** | 480 414,5 | ALM |
| 1.6 i 16V | FC1N ; FC0/L/P/S KC1N ; KC0/L/P/S ▸ 031215 | E | 1598 | K4M | M | + | | 03/03 ▸ 12/07 | 8200072713 | **732717** | 460 470 | ALM |
| 1.5 dCi | FC1S ; FC0/7/8/9 KC1S ; KC0/7/8/9 | D | 1461 | K9K | M | +/- | | 03/03 ▸ 12/05 | 8200240818 | **732687** | 461 470 | ALM |
| 1.5 dCi | FC1G ; KC1G | D | 1461 | K9K | M | +/- | | 03/06 ▸ 06/08 | 8200384071 | **734922** | 461 451 | |
| 1.5 dCi | FC1R ; KC07 ; KC1R FC0/7 | D | 1461 | K9K | M | - | TSW | 03/03 ▸ 12/05 | 8200343476 | **732721** | 480 414,5 | ALM |
| 1.5 dCi | FC1/E/F ; KC1/E/F | D | 1461 | K9K | M | | | 01/06 ▸ 10/08 | 8200240818 | **732687** | 461 470 | ALM |
| 1.5 dCi | FC09 ; KC09 031205 ▸ 031215 | D | 1461 | K9K | M | - | TSW | 03/03 ▸ | 8200033831 | **732721** | 480 414,5 | ALM |
| 1.9 dCi | FC0V ; KC0V | D | 1870 | F9Q | M | +/- | | 03/03 ▸ 12/06 | 8200072713 | **732717** | 460 470 | ALM |
| 1.9 dCi,1.9 dTi | FC0V ; KC0V | D | 1870 | F9Q | M | + | type Calsonic | 03/03 ▸ 12/06 | 7700417175 | **732474** | 480 390 | ALB |
| 1.9 D | FC0J ; KC0J | D | 1870 | F8Q | M | + | | 03/03 ▸ 06/09 | 8200330848 | **732072** | 480 441 | CBS |
| 1.9 D | FC0N ; KC0N | D | 1870 | F8Q | M | + | TSW | 03/03 ▸ | 8200343476 | **732721** | 480 414,5 | ALM |
| 1.9 D | FC0N ; KC0N | D | 1870 | F8Q | M | - | TSW | 03/03 ▸ | 7700838134 | **731378** | 430 377,5 | ALM |
| 1.9 D | FC0J ; KC0J | D | 1870 | F8Q | M | - | | 03/03 ▸ | 7700312858 | **731910** | 479 442,2 | ALB |
| 1.9 D,1.9 dCi,1.9 dTi | FC0/N/V ; KC0/N/V | D | 1870 | F8Q,F9Q | M | - | TSW | 03/03 ▸ 12/06 | 7700428082 | **732621** | 480 414,5 | ALM |
| 1.9 D | FC0J ; KC0J | D | 1870 | F8Q | M | - | | 03/03 ▸ 06/09 | 7701352898 | **731910** | 479 442,2 | ALB |
| 1.9 D | FC0/J/N ; KC0/J/N | D | 1870 | F8Q | M | | TSW | 03/03 ▸ | 7700838134 | **731378** | 430 377,5 | ALM |

## MASTER (80>89)

| | | | | | | | | | | | | |
|---|---|---|---|---|---|---|---|---|---|---|---|---|
| 2.0 | FB30 ; FC30 ▸ 2910, 23300 | E | 1995 | J5R | M | - | | 08/80 ▸ 1983 | 5000387039 | | 650 396 | |
| 2.0 | FB30 ; FC30 | E | 1995 | J5R | M | - | | 08/80 ▸ 1987 | 5000393544 | | 650 398 | ALM |

## MASTER (97>2003)

| | | | | | | | | | | | | |
|---|---|---|---|---|---|---|---|---|---|---|---|---|
| 1.9 dCi,1.9 dTi | FD0/L/P ; JD1L ; JD0 L/P | D | 1870 | F9Q | M | + | TSW | 02/01 ▸ 09/03 | 7701046210 | **732050** | 730 396 | CBS |
| 1.9 dCi,1.9 dTi | FD0/L/P ; JD1L ; JD0 L/P | D | 1870 | F9Q | M | - | TSW | 02/01 ▸ 09/03 | 7701049664 | **732798** | 728 414,5 | ALB |
| 2.2 dCi | ED0/G ; FD1N ; FD2G FD3G ; HD0G ; HD1G ; FD0/G/N ; JD1G ; JDNN UD0G ; UD1G ; JD0/G/N | D | 2188 | G9T | M | +/- | TSW | 11/00 ▸ 09/03 | 7701049664 | **732798** | 728 414,5 | ALB |
| 2.2 dCi | FD1N ; JD0N ; JDNN FD0/N | D | 2188 | G9T | M | + | | 11/00 ▸ 09/03 | 7701057712 | | 731 414,2 | CBS |
| 2.5 dCi | FD1M ; JD0M ; JDNM FD0/M | D | 2464 | G9U | M | + | TSW | 12/00 ▸ 09/03 | 7701046210 | **732050** | 730 396 | CBS |
| 2.5 dCi | FD1M ; JD0M ; JDNM FD0/M | D | 2464 | G9U | M | + | | 12/00 ▸ 09/03 | 7701057712 | | 731 414,2 | CBS |
| 2.5 dCi | FD1M ; JD0M ; JDNM FD0/M | D | 2464 | G9U | M | - | TSW | 12/00 ▸ 09/03 | 7701049664 | **732798** | 728 414,5 | ALB |
| 2.5 D | FD0A ; HD0A ; JD0A ; UD0A ; ED0/A | D | 2499 | S8U | M | - | TSW | 09/97 ▸ 09/03 | | **732063** | 760 460 | ALB |
| 2.8 dTi,2.8 dTi L2H1 | FD0C ; HD0C ; JD0B UD0C ; ED0/C | D | 2800 | S9W | M | +/- | TSW | 01/98 ▸ 03/00 | 7701046210 | **732050** | 730 396 | CBS |
| 2.8 dTi,2.8 dTi L2H1 | FD0C ; HD0C ; JD0B UD0C ; ED0/C | D | 2800 | S9W | M | + | TSW | 01/98 ▸ 09/03 | 7701046210 | **732050** | 730 396 | CBS |
| 2.8 dTi,2.8 dTi L2H1 | FD0C ; HD0C ; JD0B UD0C ; ED0/C | D | 2800 | S9W | M | - | | 01/98 ▸ 09/03 | | | 730 397 | ALB |
| 2.8 dTi,2.8 dTi L2H1 | FD0C ; HD0C ; JD0B UD0C ; ED0/C | D | 2800 | S9W | M | - | TSW | 01/98 ▸ 09/03 | 7701049664 | **732798** | 728 414,5 | ALB |

## MASTER (2003>2006)

| | | | | | | | | | | | | |
|---|---|---|---|---|---|---|---|---|---|---|---|---|
| 1.9 dCi | FD0P ; JD0P | D | 1870 | F9Q | M | + | TSW | 10/03 ▸ 05/06 | 7701057119 | **732918** | 730 414,5 | ALM |
| 1.9 dCi | FD0P ; JD0P | D | 1870 | F9Q | M | - | TSW | 10/03 ▸ 05/06 | 7701057117 | **732917** | 730 414,5 | ALM |
| 2.2 dCi | JD0N | D | 2188 | G9T | M | + | TSW | 10/03 ▸ 05/06 | 7701057119 | **732918** | 730 414,5 | ALM |
| 2.2 dCi | JD0N | D | 2188 | G9T | M | - | TSW | 10/03 ▸ 05/06 | 7701057117 | **732917** | 730 414,5 | ALM |
| 2.5 dCi,2.5 dCi 100 2.5 dCi 114 | EL0D ; ED0/U/V ; FD0 U/V ; FDA/1/2 ; FDB 1/2 ; FL0D ; FDC/1/2 ; JD0M ; HD0/U/V JL0D ; JDA/1/2 ; UD0/U/V | D | 2464 | G9U | M | + | TSW | 10/03 ▸ 05/06 | 7701057120 | **732919** | 730 414,5 | ALB |

Radiator Radiateur Motorkühler Radiatore di raffreddamento Radiator Radyatör Radiador Радиатор vízhűtő Vodní chladič Radiator Ψυγείο



• **New** Nouveau **Nuevo** Novo **Nuovo** Nieuw **Neu** Nowość **Yeni** Новый Νέο **Nový**

| Type Ctr. | | CC | | AC | | | OE | Valeo | DIM. | TECH |
|---|---|---|---|---|---|---|---|---|---|---|
| **RENAULT (.../...)** | | | | | | | | | | |
| **MASTER (2003>2006) (.../...)** | | | | | | | | | | |
| 2.5 dCi,2.5 dCi 100<br>2.5 dCi 114 ED0D ; ED0/U/V ; FD0 U/V ; FDA/1/2 ; FDB 1/2 ; FL0D ; FDC/1/2 ; JD0M ; HD0/U/V JL0D ; JDA/1/2 ; UD0/U/V | D | 2464 | G9U | M | - | TSW | 10/03 ▸ 05/06 | 7701057119 | **732918** | 730 414,5 ALM |
| 2.5 dCi 100,2.5 dCi 114 FDA/1/2 ; FDB/1/2 FDC/1/2 ; JDA/1/2 | D | 2464 | G9U | M | - | TSW | 01/06 ▸ 05/06 | 7701057117 | **732917** | 730 414,5 ALM |
| 2.5 dCi FL0D ; JL0D ; EL0/D | D | 2464 | G9U | A | + | TSW | 10/03 ▸ 05/06 | 7701057120 | **732919** | 730 414,5 ALB |
| 2.5 dCi FL0D ; JL0D ; EL0/D | D | 2464 | G9U | A | - | TSW | 10/03 ▸ 05/06 | 7701057119 | **732918** | 730 414,5 ALM |
| 3.0 dCi FD0S ; HD0S ; JD0T UD0S ; ED0/S | D | 2953 | ZD3 | M | + | TSW | 10/03 ▸ 05/06 | 7701057120 | **732919** | 730 414,5 ALB |
| 3.0 dCi FD0S ; HD0S ; JD0T UD0S ; ED0/S | D | 2953 | ZD3 | M | - | TSW | 10/03 ▸ 05/06 | 7701057119 | **732918** | 730 414,5 ALM |
| **MASTER (2006>)** | | | | | | | | | | |
| 2.5 dCi 100,2.5 dCi 120<br>2.5 dCi 146 ED0/1/2 ; ED4/1/2 ED8/1/2 ; ED9/1/2 FD0/1/2/3 ; FD2/1/2 ; FD3/1/2 ; FD7/1/2 FD8/1/2 ; FD9/1/2 ; HD0/1/2 ; HD1/1/2 ; JD0 1/2/Y ; JD1/1/2 ; UD0/1/2 ; UD1/1/2 ; UD4/1 2 ; UD5/1/2 ; UD6/1/2 ; UD8/1/2 | D | 2464 | G9U | M | +/- | | 06/06 ▸ | 7701066109 | **735112** | 780 422,3 |
| 2.5 dCi 120,2.5 dCi 150 ED0/1/Y ; ED4/1/Y ED8/1/Y ; ED9/1/Y ; FD2Y ; FD3Y ; FD7Y FD8Y ; FD9Y ; HD0Y ; HD1Y ; JD0Y ; JD1Y UD0Y ; UD1Y ; UD4Y ; UD5Y ; UD6Y ; UD8Y FD0/1/Y | D | 2464 | G9U | M | + | | 06/06 ▸ | 7701066109 | **735112** | 780 422,3 |
| 2.5 dCi 100,2.5 dCi 120<br>2.5 dCi 146,2.5 dCi 150 ED0/1/2/Y ; ED4/1/2 Y ; ED8/1/2/Y ; ED9 1/2/Y ; FD0/1/2/3/Y ; FD2/1/2/Y ; FD3/1/2/Y FD7/1/2/Y ; FD8/1/2/Y ; FD9/1/2/Y ; HD0/1/2 Y ; HD1/1/2/Y ; JD0/1/2/Y ; JD1/1/2/Y ; UD0 1/2/Y ; UD1/1/2/Y ; UD4/1/2/Y ; UD5/1/2/Y UD6/1/2/Y ; UD8/1/2/Y | D | 2464 | G9U | M | + | TSW | 06/06 ▸ | 7701057120 | **732919** | 730 414,5 ALB |
| 2.5 dCi 100 FD0/2/W | D | 2464 | G9U | M | + | TSW | 06/06 ▸ | 7701057119 | **732918** | 730 414,5 ALM |
| 2.5 dCi 100 FD0/2/W | D | 2464 | G9U | M | - | TSW | 06/06 ▸ | 7701057117 | **732917** | 730 414,5 ALM |
| 2.5 dCi 100,2.5 dCi 120<br>2.5 dCi 146,2.5 dCi 150 ED0/1/2/Y ; ED4/1/2 Y ; ED8/1/2/Y ; ED9 1/2/Y ; FD0/1/2/3/Y ; FD2/1/2/Y ; FD3/1/2/Y FD7/1/2/Y ; FD8/1/2/Y ; FD9/1/2/Y ; HD0/1/2 Y ; HD1/1/2/Y ; JD0/1/2/Y ; JD1/1/2/Y ; UD0 1/2/Y ; UD1/1/2/Y ; UD4/1/2/Y ; UD5/1/2/Y UD6/1/2/Y ; UD8/1/2/Y | D | 2464 | G9U | M | - | TSW | 06/06 ▸ | 7701057119 | **732918** | 730 414,5 ALM |
| **RAPID (85>91)** | | | | | | | | | | |
| 1.0 F400 | E | 956 | C1C | M | - | TSW | 09/85 ▸ 08/91 | 7700773968 | **883959** | 360 370 ALM |
| 1.0 F400 | E | 956 | C1C | M | | TSW | 09/85 ▸ 08/91 | 7700757930 | **883852** | 360 322 ALM |
| 1.1 F40/1/H | E | 1108 | C1E | M | - | TSW | 09/85 ▸ 08/91 | 7700773968 | **883959** | 360 370 ALM |
| 1.1 F40/1/H | E | 1108 | C1E | M | | TSW | 09/85 ▸ 08/91 | 7700757930 | **883852** | 360 322 ALM |
| 1.4 i F407 | E | 1390 | C3J | M | - | TSW | 07/90 ▸ 08/91 | 7700773968 | **883959** | 360 370 ALM |
| 1.4 i F407 | E | 1390 | C3J | M | | TSW | 07/90 ▸ 08/91 | 7700757930 | **883852** | 360 322 ALM |
| 1.4,1.4 i F40/2/7/M | E | 1397 | C1J,C2J,C3J | M | - | TSW | 09/85 ▸ 08/91 | 7700773968 | **883959** | 360 370 ALM |
| 1.4,1.4 i F40/2/7 | E | 1397 | C1J,C3J | M | | TSW | 09/85 ▸ 08/91 | 7700757930 | **883852** | 360 322 ALM |
| 1.6 D F404 | D | 1595 | F8M | M | | TSW | 09/85 ▸ 08/91 | 7700773700 | **810851** | 390 397,5 ALB |
| 1.6 D F404 | D | 1595 | F8M | M | | TSW | 09/85 ▸ 08/91 | 7700757930 | **883852** | 360 322 ALM |
| **RAPID II (91>98)** | | | | | | | | | | |
| 1.4 i F40V | E | 1390 | E7J | M | +/- | TSW | 09/91 ▸ 03/98 | 7701047886 | **816658** | 430 377,5 ALM |
| 1.4 i F40U | E | 1390 | E7J | M | + | TSW 819745 | 09/91 ▸ 03/98 | 7700806575 | **730181** | 432 399 CBS |
| 1.4 i F40/D/U | E | 1390 | E7J | M | - | TSW | 09/91 ▸ 03/98 | 7701047886 | **816658** | 430 377,5 ALM |
| 1.9 D F40/N/P | D | 1870 | F8Q | M | | TSW | 09/91 ▸ 03/98 | 6006000712 | **730502** | 462 415 ALB |
| **TRAFIC (80>89)** | | | | | | | | | | |
| 1.4 GPL T1X0 | G | 1397 | 847 | M | - | TSW | 07/80 ▸ 02/89 | 7700696425 | **810843** | 480 307 ALB |
| 1.4 T1X0 | E | 1397 | 847 | M | - | TSW | 07/80 ▸ 02/89 | 7700696425 | **810843** | 480 307 ALB |
| 1.4 T5X0 | E | 1397 | 847 | M | - | TSW | 07/80 ▸ 1986 | 7700657109 | **810843** | 480 307 ALB |
| 1.4 P3X0 | E | 1397 | 847 | M | | TSW | 07/80 ▸ 02/89 | 7700657109 | **810843** | 480 307 ALB |
| 1.6,1.6 GPL PAY1 ; T3V1 ; T3X1 T4V1 ; T4X1 ; T5W1 ; T5X1 ; T6W1 ; T9X1 TAX1 ; TAZ1 ; V5W1 ; V9X1 ; P3X/1 | E | 1647 | 841,A1M | M | - | TSW | 07/80 ▸ 02/89 | 7700720232 | **810843** | 480 307 ALB |
| 1.6 T3X1 ; T5X1 ; T9X1 ; TAX1 ; TAZ1 ; T3V/1 | E | 1647 | A1M | A | - | TSW | 07/80 ▸ 1986 | 7700720232 | **810843** | 480 307 ALB |

# RENAULT (.../...)

| | | | CC | | AC | | | OE | Valeo | DIM. | TECH |
|---|---|---|---|---|---|---|---|---|---|---|---|
| **TRAFIC (80>89) (.../...)** | | | | | | | | | | | |
| 1.7 | T2W8 ; T3X8 ; T4V8 ; T4X8 ; T5W8 ; T5X8 TBZ8 ; P3X/8 | E | 1721 | F1N | M | - | TSW | 07/80 ▸ 02/89 | 7700720232 | **810843** | 480 307 | ALB |
| 2.0 | PCX2 ; PCY2 ; T3V3 ; T5X2 ; T7W2 ; TBX2 TBZ2 ; V2W2 ; V4X2 ; V9X2 ; PAY/2 | E | 1995 | J5R | M | - | TSW | 07/80 ▸ 02/89 | 7700736827 | **810835** | 640 328 | ALB |
| 2.0 | PCX2 ; PCY2 ; T3V3 ; T5X2 ; T7W2 ; TBX2 TBZ2 ; V2W2 ; V4X2 ; V9X2 ; PAY/2 | E | 1995 | J5R | M | - | | 07/80 ▸ 07/86 | 7700696140 | | 530 325 | CBS |
| 2.0 | TE22 ; TE92 ; TE1/2 | E | 1995 | J5R | M | | TSW | 07/86 ▸ 02/89 | 7700736827 | **810835** | 640 328 | ALB |
| 2.0 | T5X2 ; TBX2 | E | 1995 | J5R | A | - | | 07/80 ▸ 06/86 | 7700696140 | | 530 325 | CBS |
| 2.0 | T5X2 ; TBX2 | E | 1995 | J5R | A | - | TSW | 07/80 ▸ 02/89 | 7700736827 | **810835** | 640 328 | ALB |
| 2.1 D | PAY3 ; PCY3 ; T2W3 ; T3X3 ; T4V3 ; T4X3 T5W3 ; T5X3 ; T6W3 ; T7W3 ; T9X3 ; TAX3 TAZ3 ; TBX3 ; TBZ3 ; V2W3 ; V4X3 ; V5W3 V9X3 ; P3X/3 | D | 2068 | 852 | M | - | TSW | 07/80 ▸ 02/89 | 7700736827 | **810835** | 640 328 | ALB |
| 2.1 D | PAY3 ; PCY3 ; T2W3 ; T3X3 ; T4V3 ; T4X3 T5W3 ; T5X3 ; T6W3 ; T7W3 ; T9X3 ; TAX3 TAZ3 ; TBX3 ; TBZ3 ; V2W3 ; V4X3 ; V5W3 V9X3 ; P3X/3 | D | 2068 | 852 | M | - | | 07/80 ▸ 06/86 | 7700696140 | | 530 325 | CBS |
| 2.5 D | PCX4 ; PCY4 | D | 2499 | S8U | M | - | | 07/83 ▸ 02/89 | 7700700099 | | 630 362 | CBS |
| **TRAFIC (89>94)** | | | | | | | | | | | |
| 1.4 | T110 ; T120 | E | 1397 | C1J | M | - | TSW | 03/89 ▸ 06/91 | 7700784039 | **810912** | 430 397 | ALB |
| 1.7 | P358 ; T118 ; T128 ; T2B8 ; T318 ; T328 T358 ; T418 ; T428 ; T558 ; T5B8 ; P31/8 | E | 1721 | F1N | M | - | TSW | 03/89 ▸ 09/94 | 7700784039 | **810912** | 430 397 | ALB |
| 2.0 | PC92 ; PCG2 ; T2B2 ; T552 ; T7B2 ; TB12 TB22 ; TB42 ; TB52 ; TB62 ; TB92 ; TE92 V312 ; V412 ; V422 ; V492 ; V5B2 ; PC8/2 | E | 1995 | J5R | M | - | TSW | 03/89 ▸ 09/94 | 7700272527 | **730511** | 480 400 | CBS |
| 2.0 | PC92 ; PCG2 ; T2B2 ; T552 ; T7B2 ; TB12 TB22 ; TB42 ; TB52 ; TB62 ; TB92 ; TE92 V312 ; V412 ; V422 ; V492 ; V5B2 ; PC8/2 | E | 1995 | J5R | M | | TSW | 03/89 ▸ 09/94 | 7700790964 | **730180** | 480 396,7 | ALB |
| 2.2 | T35A ; T5BA ; T7BA ; T7CA ; TB1A ; TB2A TB6A ; TB9A ; TC9A ; TE1A ; TE2A ; TE9A V31A ; V41A ; V42A ; V49A ; V5BA ; T31/A | E | 2165 | J7T | M | - | TSW | 03/89 ▸ 09/94 | 7700272527 | **730511** | 480 400 | CBS |
| 2.2 | T35A ; T5BA ; T7BA ; T7CA ; TB1A ; TB2A TB6A ; TB9A ; TC9A ; TE1A ; TE2A ; TE9A V31A ; V41A ; V42A ; V49A ; V5BA ; T31/A | E | 2165 | J7T | M | | TSW | 03/89 ▸ 09/94 | 7700790964 | **730180** | 480 396,7 | ALB |
| 2.1 D | P353 ; PC83 ; PC93 ; PCG3 ; T113 ; T123 T2B3 ; T313 ; T323 ; T333 ; T353 ; T413 T423 ; T433 ; T553 ; T5B3 ; T7B3 ; TB13 TB23 ; TB33 ; TB43 ; TB53 ; TB63 ; TB93 V313 ; V423 ; V5B3 ; P31/3 | D | 2068 | 852,J8S | M | - | TSW | 03/89 ▸ 09/94 | 7700272527 | **730511** | 480 400 | CBS |
| 2.1 D | P353 ; PC83 ; PC93 ; PCG3 ; T113 ; T123 T2B3 ; T313 ; T323 ; T333 ; T353 ; T413 T423 ; T433 ; T553 ; T5B3 ; T7B3 ; TB13 TB23 ; TB33 ; TB43 ; TB53 ; TB63 ; TB93 V313 ; V423 ; V5B3 ; P31/3 | D | 2068 | 852,J8S | M | | TSW | 03/89 ▸ 09/94 | 7700790964 | **730180** | 480 396,7 | ALB |
| 2.5 D | T2B/4 ; T41/4/B ; T434 ; T554 ; T42/4/B T7B/4/B ; TB1/4/B ; TB34 ; TB44 ; TB54 TB64 ; TB2/4/B ; TC94 ; TB9/4/B ; V31/4/B V42/4/B ; V49/4/B ; V5B/4/B | D | 2499 | S8U | M | - | TSW | 03/89 ▸ 09/94 | 7700741216 | **730944** | 655 398 | CBS |
| **TRAFIC (94>97)** | | | | | | | | | | | |
| 2.2 i | T12E ; T2BE ; T31E ; T32E ; T35E ; T41E T42E ; T55E ; T5BE ; T7CE ; TB1E ; TB2E TB4E ; TB5E ; TB6E ; TB9E ; TC9E ; TMBE V31E ; V42E ; V49E ; V5BE ; T11/E | E | 2165 | J7T | M | - | TSW | 10/94 ▸ 08/97 | 6006004494 | **732608** | 585 400 | CBS |
| 2.1 D | PC9F ; PCGF ; T11F ; T12F ; T2BF ; T31F T32F ; T33F ; T35F ; T41F ; T42F ; T43F T55F ; T5BF ; TMBF ; PC8/F | D | 2068 | J8S | M | - | TSW | 10/94 ▸ 08/97 | 7700741216 | **730944** | 655 398 | CBS |
| 2.5 D | TB1G ; TB2G ; TB3G ; TB4G ; TB5G ; TB6G TB9G ; TC7G ; TC9G ; TG1G ; TH1G ; TJ1G V31G ; V42G ; V49G ; V5BG ; T55/G | D | 2499 | S8U | M | - | TSW | 10/94 ▸ 08/97 | 7700741216 | **730944** | 655 398 | CBS |
| **TRAFIC (97>2001)** | | | | | | | | | | | |
| 1.9 D | T55/J/L ; TF1/J/L ; TF2/J/L ; TF3/J/L ; THB J/L | D | 1870 | F8Q | M | - | TSW | 09/97 ▸ 03/01 | 7700310123 | **732940** | 650 395 | CBS |
| 2.5 D | T7BG ; TB2G ; TB9G ; TC9M ; T55/G/M ; TCJ/G M ; TF1/G/M ; TF2/G/M ; TF3/G/M ; V31/G/M V5B/G/M | D | 2499 | S8U | M | - | TSW | 09/97 ▸ 03/01 | 7700741216 | **730944** | 655 398 | CBS |
| **TRAFIC (2001>2006)** | | | | | | | | | | | |
| 2.0 i 16V | FL0A ; JL0A ; EL0/A | E | 1998 | F4R | M | +/- | | 04/01 ▸ 07/06 | 7700312899 | **732846** | 560 469 | ALB |

Radiator Ψυγείο Vodní chladič Radiator vízhűtő Радиатор Radiador Radiator Radyatör Radiator Radiatore di raffreddamento Motorkühler Radiateur Radiator



• **New** Nouveau **Nuevo** Novo **Nuovo** Nieuw **Neu** Nowość **Yeni** Новый Νέο **Novy**

| | Type Ctr. | | CC | | | AC | | | OE | Valeo | DIM. | | TECH |
|---|---|---|---|---|---|---|---|---|---|---|---|---|---|
| **RENAULT (.../...)** | | | | | | | | | | | | | |
| **TRAFIC (2001>2006) (.../...)** | | | | | | | | | | | | | |
| 1.9 dCi | EL0/C ; FL0/B/C JL0/B/C | D | 1870 | F9Q | M | + | | 04/01 ▸ 07/06 | 7700312899 | **732846** | 560 | 469 | ALB |
| 1.9 dCi | EL0/C ; FL0/B/C JL0/B/C | D | 1870 | F9Q | M | - | | 04/01 ▸ 07/06 | 8200073817 | **732853** | 561 | 470 | ALM |
| 2.5 dCi 16V | FL0D ; JL0D ; EL0/D | D | 2464 | G9U | M | + | | 09/02 ▸ 07/06 | 8200297816 | **732911** | 780 | 479 | ALB |
| 2.5 dCi 16V | FL0D ; JL0D ; EL0/D | D | 2464 | G9U | M | + | | 09/02 ▸ | 8200019381 | **732911** | 780 | 479 | ALB |
| 2.5 dCi 16V | FL0D ; JL0D ; EL0/D | D | 2464 | G9U | M | - | | 09/02 ▸ | 8200019380 | **732902** | 781,4 | 470 | ALM |
| 2.5 dCi 16V | FL0D ; JL0D ; EL0/D | D | 2464 | G9U | M | - | | 09/02 ▸ 07/06 | 8200297815 | **732902** | 781,4 | 470 | ALM |
| **TRAFIC II (2006>)** | | | | | | | | | | | | | |
| 2.0 i 16V | EL0/L ; FL0/L/N/W JL0/J/L/N/V | E | 1998 | F4R | M | +/- | | 07/06 ▸ | 7700312899 | **732846** | 560 | 469 | ALB |
| 2.0 i 16V | FL0L ; JL0L | E | 1998 | F4R | M | - | | 07/06 ▸ | 7700312899 | **732846** | 560 | 469 | ALB |
| 2.0 dCi | EL0/H/M ; FL0/H/M JL0/H/M | D | 1995 | M9R | M | +/- | | 07/06 ▸ | 8200411166 | **734946** | 558 | 462,2 | ALB |
| 2.0 dCi,2.0 dCi eco2 | JL0/H/M | D | 1995 | M9R | M | - | | 07/06 ▸ | 8200411166 | **734946** | 558 | 462,2 | ALB |
| 2.0 dCi,2.0 dCi eco2 | JL0/H/M | D | 1995 | M9R | M | | | 07/06 ▸ | 8200411166 | **734946** | 558 | 462,2 | ALB |
| 2.5 dCi | EL0/J/R/V ; FL0/J/R V ; JL0/J/R/V | D | 2464 | G9U | M | + | | 07/06 ▸ | 8200297816 | **732911** | 780 | 479 | ALB |
| 2.5 dCi | EL0/J/R/V ; FL0/J/R V ; JL0/J/R/V | D | 2464 | G9U | M | - | | 07/06 ▸ | 8200297815 | **732902** | 781,4 | 470 | ALM |
| **RENAULT VEHICULES INDUSTRIELS** | | | | | | | | | | | | | |
| **MASCOTT** | | | | | | | | | | | | | |
| 2.8 TD,2.8 dti | | D | 2798 | 8140-43C,8140-43S | M | +/- | | 07/99 ▸ 06/04 | 5010382645 | **732569** | 588 | 460 | ALB |
| 2.8 D | | D | 2800 | 8140-63 | M | - | | 07/99 ▸ 12/01 | 5010435102 | **732570** | 588 | 460 | ALB |
| **ROVER** | | | | | | | | | | | | | |
| **25 (99>2003)** | | | | | | | | | | | | | |
| 1.1 i 16V | | E | 1119 | 11K4F4 | M | +/- | | 03/01 ▸ 07/04 | PCC001660 | **734354** | 522 | 396 | ALB |
| 1.4 i 16V | | E | 1396 | 14K4F4 | M | +/- | | 12/99 ▸ 07/04 | PCC001660 | **734354** | 522 | 396 | ALB |
| 1.4 i 16V | | E | 1396 | 14K4F4 | M | + | | 12/99 ▸ 07/04 | GRD1071 | **734354** | 522 | 396 | ALB |
| 1.4 i 16V | | E | 1396 | 14K4F4 | M | | | 12/99 ▸ 07/04 | GRD1072 | **731815** | 430 | 377,5 | ALM |
| 1.6 i 16V | | E | 1588 | 16K4F4 | M | +/- | | 12/99 ▸ 07/04 | PCC001660 | **734354** | 522 | 396 | ALB |
| 1.6 i 16V | | E | 1588 | 16K4F4 | M | + | | 12/99 ▸ | PCC107680 | **734354** | 522 | 396 | ALB |
| 1.6 i 16V | | E | 1588 | 16K4F4 | M | | | 12/99 ▸ 07/04 | GRD1071 | **734354** | 522 | 396 | ALB |
| 1.6 i 16V | | E | 1588 | 16K4F4 | M | | | 12/99 ▸ 07/04 | GRD1072 | **731815** | 430 | 377,5 | ALM |
| 1.6 i 16V | | E | 1588 | 16K4F4 | A | +/- | | 12/99 ▸ 07/04 | PCC001660 | **734354** | 522 | 396 | ALB |
| 1.6 i 16V | | E | 1588 | 16K4F4 | A | + | | 12/99 ▸ | PCC107680 | **734354** | 522 | 396 | ALB |
| 1.6 i 16V | | E | 1588 | 16K4F4 | A | | | 12/99 ▸ 07/04 | GRD1071 | **734354** | 522 | 396 | ALB |
| 1.6 i 16V | | E | 1588 | 16K4F4 | A | | | 12/99 ▸ 07/04 | GRD1072 | **731815** | 430 | 377,5 | ALM |
| 1.8 i 16V | | E | 1796 | 18K16 | M | +/- | | 12/99 ▸ 07/04 | PCC001660 | **734354** | 522 | 396 | ALB |
| 1.8 i 16V | | E | 1796 | 18K16 | M | + | | 12/99 ▸ | PCC107680 | **734354** | 522 | 396 | ALB |
| 1.8 i 16V | | E | 1796 | 18K16 | M | | | 12/99 ▸ 07/04 | GRD1072 | **731815** | 430 | 377,5 | ALM |
| 1.8 i 16V | | E | 1796 | 18K16 | M | | | 12/99 ▸ 07/04 | GRD1071 | **734354** | 522 | 396 | ALB |
| 1.8 i 16V | | E | 1796 | 18K16,18K4 | A | +/- | | 12/99 ▸ 07/04 | PCC001660 | **734354** | 522 | 396 | ALB |
| 1.8 i 16V | | E | 1796 | 18K16,18K4 | A | + | | 12/99 ▸ | PCC107680 | **734354** | 522 | 396 | ALB |
| 1.8 i 16V | RFMN | E | 1796 | 18K16,18K4 | A | + | | 12/99 ▸ | GRD1071 | **734354** | 522 | 396 | ALB |
| 1.8 i 16V | | E | 1796 | 18K16,18K4 | A | | | 12/99 ▸ 07/04 | GRD1072 | **731815** | 430 | 377,5 | ALM |
| 1.8 i 16V | | E | 1796 | 18K16,18K4 | A | | | 12/99 ▸ 07/04 | GRD1071 | **734354** | 522 | 396 | ALB |
| 2.0 D | | D | 1996 | 20T2N | M | + | TSW | 12/99 ▸ | GRD1076 | **731817** | 319 | 505 | CBS |
| 2.0 D | | D | 1996 | 20T2N | M | | TSW | 12/99 ▸ 07/04 | GRD1076 | **731817** | 319 | 505 | CBS |
| **25 (2004>)** | | | | | | | | | | | | | |
| 1.1 i 16V | | E | 1119 | 11K4F4 | M | +/- | | 08/04 ▸ 04/05 | PCC001660 | **734354** | 522 | 396 | ALB |
| 1.4 i 16V | | E | 1396 | 14K4F4 | M | +/- | | 08/04 ▸ 04/05 | PCC001660 | **734354** | 522 | 396 | ALB |
| 1.6 i 16V | | E | 1588 | 16K4F4 | M | +/- | | 08/04 ▸ 04/05 | PCC001660 | **734354** | 522 | 396 | ALB |
| 1.6 i 16V | | E | 1588 | 16K4F4 | A | +/- | | 08/04 ▸ 04/05 | PCC001660 | **734354** | 522 | 396 | ALB |
| 1.8 i 16V | | E | 1796 | 18K4 | A | +/- | | 08/04 ▸ 04/05 | PCC001660 | **734354** | 522 | 396 | ALB |
| 2.0 Di ▸ 778996 | | D | 1994 | 20T2N | M | +/- | TSW | 08/04 ▸ 12/04 | PCC113540 | **731817** | 319 | 505 | CBS |
| 2.0 D | | D | 1996 | 20T2N | M | +/- | TSW | 08/04 ▸ 12/04 | PCC113540 | **731817** | 319 | 505 | CBS |
| **45 (2000>2004)** | | | | | | | | | | | | | |
| 1.4 i 16V | RTC/L/W ; RTM/L/W RTS/L/W ; RTZ/L/W | E | 1396 | 14K4F4 | M | +/- | | 01/00 ▸ 04/04 | GRD1074 | **731818** | 525 | 377,5 | ALM |

# ROVER (.../...)

## 45 (2000>2004) (.../...)

| | | CC | | | AC | | | OE | Valeo | DIM. | TECH |
|---|---|---|---|---|---|---|---|---|---|---|---|
| 1.4 i 16V | RTC/L/W ; RTM/L/W RTS/L/W ; RTZ/L/W | E | 1396 | 14K4F4 | M | - | | 01/00 ▸ 04/04 | GRD938 | **731815** | 430 377,5 | ALM |
| 1.6 i 16V | RTC/L/W ; RTS/L/W RTZ/L/W | E | 1589 | 16K4F4 | M | +/- | | 01/00 ▸ 04/04 | GRD1074 | **731818** | 525 377,5 | ALM |
| 1.6 i 16V | RTC/L/W ; RTS/L/W RTZ/L/W | E | 1589 | 16K4F4 | M | - | | 01/00 ▸ 04/04 | GRD938 | **731815** | 430 377,5 | ALM |
| 1.8 i 16V | RTC/L/W ; RTS/L/W RTZ/L/W | E | 1796 | 18K4F | M | + | | 01/00 ▸ 02/04 | GRD1074 | **731818** | 525 377,5 | ALM |
| 1.8 i 16V | RTC/L/W ; RTS/L/W RTZ/L/W | E | 1796 | 18K4F | M | - | | 01/00 ▸ 02/04 | GRD938 | **731815** | 430 377,5 | ALM |
| 2.0 iDT | RTC/L/W ; RTM/L/W RTS/L/W ; RTZ/L/W | D | 1996 | 20T2N | M | +/- | TSW | 01/00 ▸ 02/04 | GRD933 | **734290** | 322 503 | ALM |
| 2.0 iDT | RTC/L/W ; RTM/L/W RTS/L/W ; RTZ/L/W | D | 1996 | 20T2N | M | | TSW 820832 | 01/00 ▸ 02/04 | GRD932 | **731820** | 319 505 | CBS |

## 45 (2004>)

| | | CC | | | AC | | | OE | Valeo | DIM. | TECH |
|---|---|---|---|---|---|---|---|---|---|---|---|
| 1.4 i 16V | RTMW ; RTSW ; RTC/L W ; RTZ/L/W | E | 1396 | 14K4F4 | M | +/- | | 06/04 ▸ 04/05 | PCC001610 | **731818** | 525 377,5 | ALM |
| 1.4 i 16V ▸ 644944 | RTMW ; RTSW ; RTC/L W ; RTZ/L/W | E | 1396 | 14K4F4 | M | + | | 06/04 ▸ 2005 | PCC107401 | **731818** | 525 377,5 | ALM |
| 1.6 i 16V | RTC/L/W ; RTS/L/W RTZ/L/W | E | 1589 | 16K4F4 | M | +/- | | 06/04 ▸ 04/05 | PCC001610 | **731818** | 525 377,5 | ALM |
| 1.6 i 16V ▸ 644944 | RTC/L/W ; RTS/L/W RTZ/L/W | E | 1589 | 16K4F4 | M | + | | 06/04 ▸ 2005 | PCC107401 | **731818** | 525 377,5 | ALM |
| 1.8 i 16V | RTC/L/W ; RTS/L/W RTZ/L/W | E | 1796 | 18K4F | M | +/- | | 06/04 ▸ 04/05 | PCC001610 | **731818** | 525 377,5 | ALM |
| 1.8 i 16V | RTC/L/W ; RTS/L/W RTZ/L/W | E | 1796 | 18K4F | M | + | | 06/04 ▸ 2005 | PCC107401 | **731818** | 525 377,5 | ALM |

## 75 (99>2003)

| | | CC | | | AC | | | OE | Valeo | DIM. | TECH |
|---|---|---|---|---|---|---|---|---|---|---|---|
| 1.8 i 16V ZD 208518 ▸ | R40 | E | 1796 | 18K4F | M | +/- | | > ▸ | GRD1080 | **734829** | 648 447 | CBS |
| 1.8 i 16V 208518 ▸ | R40 | E | 1796 | 18K4F | M | +/- | | 02/99 ▸ 06/04 | PCC000960 | **734829** | 648 447 | CBS |
| 1.8 i 16V | | E | 1796 | 18K4F | M | | | 08/01 ▸ | GRD1080 | **734829** | 648 447 | CBS |
| 1.8 i 16V ZD 208518 ▸ | R40 | E | 1796 | 18K4F | A | +/- | | > ▸ | GRD1080 | **734829** | 648 447 | CBS |
| 1.8 i 16V 208518 ▸ | R40 | E | 1796 | 18K4F | A | +/- | | 02/99 ▸ 06/04 | PCC000960 | **734829** | 648 447 | CBS |
| 1.8 i 16V | | E | 1796 | 18K4F | A | | | 08/01 ▸ | GRD1080 | **734829** | 648 447 | CBS |
| 1.8 i 16V ▸ 208517 | R40 | E | 1796 | 18K4F | M | +/- | | 02/99 ▸ | GRD1055 | **734829** | 648 447 | CBS |
| 1.8 i 16V ▸ 208517 | R40 | E | 1796 | 18K4F | A | +/- | | 02/99 ▸ | GRD1055 | **734829** | 648 447 | CBS |
| 2.0 i V6 24V ZD 208518 ▸ | R40 | E | 1997 | 20K6F | M | +/- | | > ▸ | GRD1080 | **734829** | 648 447 | CBS |
| 2.0 i V6 24V | | E | 1997 | 20K6F | M | +/- | | 02/99 ▸ 06/04 | PCC000960 | **734829** | 648 447 | CBS |
| 2.0 i V6 24V | | E | 1997 | 20K6F | M | | | 08/01 ▸ | GRD1080 | **734829** | 648 447 | CBS |
| 2.0 i V6 24V ZD 208518 ▸ | R40 | E | 1997 | 20K6F | A | +/- | | > ▸ | GRD1080 | **734829** | 648 447 | CBS |
| 2.0 i V6 24V 208518 ▸ | R40 | E | 1997 | 20K6F | A | +/- | | 02/99 ▸ 06/04 | PCC000960 | **734829** | 648 447 | CBS |
| 2.0 i V6 24V | | E | 1997 | 20K6F | A | | | 08/01 ▸ | GRD1080 | **734829** | 648 447 | CBS |
| 2.0 i V6 24V ▸ 208517 | R40 | E | 1997 | 20K6F | M | +/- | | 02/99 ▸ | GRD1055 | **734829** | 648 447 | CBS |
| 2.0 i V6 24V ▸ 208517 | R40 | E | 1997 | 20K6F | A | +/- | | 02/99 ▸ | GRD1055 | **734829** | 648 447 | CBS |
| 2.5 i V6 24V ZD 208518 ▸ | R40 | E | 2497 | 25KV6F-175 | M | +/- | | > ▸ | GRD1080 | **734829** | 648 447 | CBS |
| 2.5 i V6 24V | R40 | E | 2497 | 25KV6-177,25KV6F-175 | M | +/- | | 02/99 ▸ 06/04 | PCC000960 | **734829** | 648 447 | CBS |
| 2.5 i V6 24V | | E | 2497 | 25KV6-177 | M | | | 08/01 ▸ | GRD1080 | **734829** | 648 447 | CBS |
| 2.5 i V6 24V ZD 208518 ▸ | R40 | E | 2497 | 25KV6F-175 | A | +/- | | > ▸ | GRD1080 | **734829** | 648 447 | CBS |
| 2.5 i V6 24V 208518 ▸ | R40 | E | 2497 | 25KV6-177,25KV6F-175 | A | +/- | | 02/99 ▸ 06/04 | PCC000960 | **734829** | 648 447 | CBS |
| 2.5 i V6 24V | | E | 2497 | 25KV6-177 | A | | | 08/01 ▸ | GRD1080 | **734829** | 648 447 | CBS |

Radiator Radiateur Motorkühler Radiatore di raffreddamento Radyatör Radiator Радиатор Radiador Vízhűtő Vodní chladič Radiator Ψυγείο



• **New** Nouveau **Nuevo** Novo **Nuovo** Nieuw **Neu** Nowość **Yeni** Новый Νέο **Novy**

# ROVER (.../...)

## 75 (99>2003) (.../...)

| | | | | | | | | | | | | | |
|---|---|---|---|---|---|---|---|---|---|---|---|---|---|
| 2.5 i V6 24V ▸ 208517 | R40 | E | 2497 | 25KV6F-175 | M | +/- | | 02/99 ▸ | GRD1055 | **734829** | 648 | 447 | CBS |
| 2.5 i V6 24V ▸ 208517 | R40 | E | 2497 | 25KV6F-175 | A | +/- | | 02/99 ▸ | GRD1055 | **734829** | 648 | 447 | CBS |
| 2.5 i V6 24V ▸ 208517 | R40 | E | 2497 | 25KV6-177 | A | | | 02/99 ▸ 2001 | GRD1055 | **734829** | 648 | 447 | CBS |
| 2.0 CDT 16V ZD 208518 ▸ | R40 | D | 1951 | M47R | M | +/- | | > ▸ | GRD1080 | **734829** | 648 | 447 | CBS |
| 2.0 CDT 16V,2.0 CDTi 16V | R40 | D | 1951 | 204D2,M47R | M | +/- | | 02/99 ▸ 06/04 | PCC000960 | **734829** | 648 | 447 | CBS |
| 2.0 CDT 16V | | D | 1951 | M47R | M | | | 08/01 ▸ | GRD1080 | **734829** | 648 | 447 | CBS |
| 2.0 CDT 16V ZD 208518 ▸ | R40 | D | 1951 | M47R | A | +/- | | > ▸ | GRD1080 | **734829** | 648 | 447 | CBS |
| 2.0 CDT 16V,2.0 CDTi 16V 208518 ▸ | R40 | D | 1951 | 204D2,M47R | A | +/- | | 02/99 ▸ 06/04 | PCC000960 | **734829** | 648 | 447 | CBS |
| 2.0 CDT 16V | | D | 1951 | M47R | A | | | 08/01 ▸ | GRD1080 | **734829** | 648 | 447 | CBS |
| 2.0 CDT 16V ▸ 208517 | R40 | D | 1951 | M47R | M | +/- | | 02/99 ▸ | GRD1055 | **734829** | 648 | 447 | CBS |
| 2.0 CDT 16V | R40 | D | 1951 | M47R | A | +/- | | 02/99 ▸ | GRD1055 | **734829** | 648 | 447 | CBS |

## 75 (2004>)

| | | | | | | | | | | | | | |
|---|---|---|---|---|---|---|---|---|---|---|---|---|---|
| 1.8 T 16V,1.8 i 16V | | E | 1796 | 18K4F,18K4K | M | +/- | | 03/04 ▸ 04/05 | PCC000960 | **734829** | 648 | 447 | CBS |
| 1.8 T 16V,1.8 i 16V | | E | 1796 | 18K4F,18K4K | M | | | 03/04 ▸ 04/05 | PCC000960 | **734829** | 648 | 447 | CBS |
| 1.8 T 16V,1.8 i 16V | | E | 1796 | 18K4F,18K4K | A | +/- | | 03/04 ▸ 04/05 | PCC000960 | **734829** | 648 | 447 | CBS |
| 1.8 i 16V | | E | 1796 | 18K4F | A | | | 03/04 ▸ 04/05 | PCC000960 | **734829** | 648 | 447 | CBS |
| 2.0 i V6 24V | | E | 1997 | 20K6F | M | | | 03/04 ▸ 04/05 | PCC000960 | **734829** | 648 | 447 | CBS |
| 2.0 i V6 24V | | E | 1997 | 20K6F | A | | | 03/04 ▸ 04/05 | PCC000960 | **734829** | 648 | 447 | CBS |
| 2.5 i V6 24V | | E | 2497 | 25KV6-177 | M | +/- | | 03/04 ▸ 04/05 | PCC000960 | **734829** | 648 | 447 | CBS |
| 2.5 i V6 24V | | E | 2497 | 25KV6-177 | M | | | 03/04 ▸ 04/05 | PCC000960 | **734829** | 648 | 447 | CBS |
| 2.5 i V6 24V | | E | 2497 | 25KV6-177 | A | +/- | | 03/04 ▸ 04/05 | PCC000960 | **734829** | 648 | 447 | CBS |
| 2.5 i V6 24V | | E | 2497 | 25KV6-177 | A | | | 03/04 ▸ 04/05 | PCC000960 | **734829** | 648 | 447 | CBS |
| 2.0 CDT 16V,2.0 CDTi 16V | | D | 1951 | 204D2,M47R | M | +/- | | 03/04 ▸ 04/05 | PCC000960 | **734829** | 648 | 447 | CBS |
| 2.0 CDT 16V | | D | 1951 | M47R | M | | | 03/04 ▸ 04/05 | PCC000960 | **734829** | 648 | 447 | CBS |
| 2.0 CDT 16V,2.0 CDTi 16V | | D | 1951 | 204D2,M47R | A | +/- | | 03/04 ▸ 04/05 | PCC000960 | **734829** | 648 | 447 | CBS |
| 2.0 CDT 16V | | D | 1951 | M47R | A | | | 03/04 ▸ 04/05 | PCC000960 | **734829** | 648 | 447 | CBS |

## 100

| | | | | | | | | | | | | | |
|---|---|---|---|---|---|---|---|---|---|---|---|---|---|
| 1.1,1.1 i 687993 ▸ | XPD/N ; XPF/N/W XPMN ; XPH/N/W ; XPY/N/W | E | 1129 | 11K2A,11K2B,11K2D | M | - | | 09/90 ▸ 12/98 | GRD146 | **731215** | 497 | 234 | CBS |
| 1.1,1.1 i ▸ 687992 | XPD/N ; XPF/N/W XPMN ; XPH/N/W ; XPY/N/W | E | 1129 | 11K2A,11K2B,11K2D | M | - | | 09/90 ▸ | GRD139 | **731215** | 497 | 234 | CBS |
| 1.4,1.4 i 687993 ▸ | XPM/N ; XPYW ; XPZW XPS/N/W | E | 1396 | 14K2A,14K2D | M | - | | > ▸ 12/98 | GRD146 | **731215** | 497 | 234 | CBS |
| 1.4 i 16V | XPSN ; XPWN | E | 1396 | 14K4C,14K4D,14K4F4 | M | - | | 09/90 ▸ 12/92 | GRD147 | **731215** | 497 | 234 | CBS |
| 1.4 i | XPYW ; XPZW | E | 1396 | 14K2D | A | - | | 02/92 ▸ 12/98 | GRD149 | **731243** | 494 | 234 | CBS |
| 1.4,1.4 i ▸ 687992 | XPM/N ; XPYW ; XPZW XPS/N/W | E | 1396 | 14K2A,14K2D | M | - | | 09/90 ▸ | GRD139 | **731215** | 497 | 234 | CBS |
| 1.4 D 507468 ▸ | XPMW ; XPYW ; XPZW ; XPF/N/W | D | 1360 | 10FTO FO | M | - | | > ▸ | GRD166 | **731243** | 494 | 234 | CBS |
| 1.4 D | XPMW ; XPYW ; XPZW ; XPF/N/W | D | 1360 | 10FTO FO | M | | | 05/92 ▸ 12/94 | GRD979 | **731215** | 497 | 234 | CBS |
| 1.4 D ▸ 507467 | XPMW ; XPYW ; XPZW ; XPF/N/W | D | 1360 | 10FTO FO | M | - | | 05/92 ▸ | GRD165 | **731243** | 494 | 234 | CBS |
| 1.5 D | XPF/N/W ; XPH/N/W ; XPZ/N/W | D | 1527 | VJZ | M | - | 2xTSW | 01/95 ▸ 12/98 | GRD923 | | 593 | 242 | CBS |

## 200 (84>90)

| | | | | | | | | | | | | | |
|---|---|---|---|---|---|---|---|---|---|---|---|---|---|
| 213 | XHML ; XHYL | E | 1342 | EV | M | + | PIP+ TSW | 06/84 ▸ 09/90 | GRD133 | **730595** | 600 | 285 | ALM |
| 213 800001, A800001 ▸ | XHSL ; XHYL ; XHM/L | E | 1342 | EV | M | - | | > ▸ 09/90 | GRD106 | | 483 | 284 | CBS |
| 213 800001, A800001 ▸ | XHYL | E | 1342 | EV | A | - | | > ▸ 09/90 | GRD114 | | | | |
| 213 ▸ 800000, A800000 | XHSL ; XHYL ; XHM/L | E | 1342 | EV | M | - | TSW | 06/84 ▸ | GRD124 | **730168** | 352 | 388 | CBS |
| 213 ▸ 800000, A800000 | XHYL | E | 1342 | EV | A | - | TSW | 06/84 ▸ | GRD124 | **730168** | 352 | 388 | CBS |

# ROVER (.../...)

| | | | CC | | | AC | | | OE | Valeo | DIM. | TECH |
|---|---|---|---|---|---|---|---|---|---|---|---|---|
| **200 (84>90) (.../...)** | | | | | | | | | | | | |
| 216 | XHYL ; XHZL ; XHW/L | E | 1598 | H16B,H16B-EFI | M | - | TSW | 03/85 ▸ 09/90 | GRD125 | **730565** | 525 377,5 | ALM |
| **200 (89>95)** | | | | | | | | | | | | |
| 214 | XWM/N/W ; XWYW ; XWS/N/W | E | 1396 | 14K2D,14K4C,14K4D,14K4F4 | M | + | | 10/89 ▸ 03/96 | GRD145 | | 525 377,5 | ALM |
| 214 | XWH/N/W ; XWM/B/N/W ; XWWN ; XWYW ; XWS/N/W<br>471119 ▸ | E | 1396 | 14K2A,14K2D,14K4C,14K4D<br>14K4F4 | M | - | | > ▸ 03/96 | GRD162 | **732759** | 430 377,5 | ALM |
| 214<br>471119 ▸ | XWMW | E | 1396 | 14K4C | M | - | | > ▸ 09/92 | GRD162 | **732759** | 430 377,5 | ALM |
| 216 | XWS/W ; XWW/B/C/N/W ; XWYW ; XWX/N/W | E | 1590 | D16A7,D16A8,D16A9,D16Z2 | M | +/- | TSW | 10/89 ▸ 03/96 | EAP8721 | **730565** | 525 377,5 | ALM |
| 216 | XWS/W ; XWW/B/C/N/W ; XWYW ; XWX/N/W | E | 1590 | D16A7,D16A8,D16A9,D16Z2 | M | - | TSW | 10/89 ▸ 03/96 | GRD125 | **730565** | 525 377,5 | ALM |
| 216 | XWYW | E | 1590 | D16A7,D16Z2 | A | +/- | | 10/89 ▸ 03/96 | PCC10040 | **731210** | 521 380 | CBS |
| 216 | XWYW | E | 1590 | D16A7,D16Z2 | A | | | 10/89 ▸ 03/96 | GRD136 | **731210** | 521 380 | CBS |
| 218 | XWMW ; XWYW | D | 1769 | IOCV2L | M | - | | 04/91 ▸ 03/96 | GRD143 | **731211** | 400 380 | CBS |
| 218 | XWMW ; XWSW ; XWH/W | D | 1905 | ICU4N,IOCU4N | M | - | | 04/91 ▸ 03/96 | GRD143 | **731211** | 400 380 | CBS |
| **200 (95>99)** | | | | | | | | | | | | |
| 211 | RFH/N/W | E | 1113 | 11K2F | M | + | | 01/98 ▸ 11/99 | PCC104670 | **731816** | 525 377,5 | ALM |
| 211 | RFH/N/W | E | 1113 | 11K2F | M | - | | 01/98 ▸ 11/99 | PCC001480 | **731815** | 430 377,5 | ALM |
| 211 | RFH/N/W | E | 1113 | 11K2F | M | - | | 01/98 ▸ 11/99 | PCC001610 | **731818** | 525 377,5 | ALM |
| 211 | RFH/N/W | E | 1113 | 11K2F | M | - | | 01/98 ▸ 11/99 | PCC001660 | **734354** | 522 396 | ALB |
| 211 | RFH/N/W | E | 1113 | 11K2F | M | | | 01/98 ▸ 11/99 | GRD938 | **731815** | 430 377,5 | ALM |
| 214<br>70221 ▸ | RFHN ; RFMW | E | 1396 | 14K2F,14K4F4 | M | + | | > ▸ 11/99 | PCC104670 | **731816** | 525 377,5 | ALM |
| 214 | RFM/N/W | E | 1396 | 14K4F4 | M | + | | 11/95 ▸ 11/99 | GRD931 | **731816** | 525 377,5 | ALM |
| 214<br>70221 ▸ | RFH/N ; RFM/N/W | E | 1396 | 14K2F,14K4F4 | M | - | | > ▸ 11/99 | PCC001660 | **734354** | 522 396 | ALB |
| 214<br>70221 ▸ | RFH/N ; RFM/N/W | E | 1396 | 14K2F,14K4F4 | M | - | | > ▸ 11/99 | PCC001480 | **731815** | 430 377,5 | ALM |
| 214<br>70221 ▸ | RFH/N ; RFM/N/W | E | 1396 | 14K2F,14K4F4 | M | - | | > ▸ 11/99 | PCC001610 | **731818** | 525 377,5 | ALM |
| 214 | RFH/N ; RFM/N/W | E | 1396 | 14K2F,14K4F4 | M | - | | 11/95 ▸ | GRD924 | **731815** | 430 377,5 | ALM |
| 214 | RFM/N/W | E | 1396 | 14K4F4 | M | - | | 11/95 ▸ 11/99 | GRD938 | **731815** | 430 377,5 | ALM |
| 214 | RFHN | E | 1396 | 14K2F | M | | | 11/95 ▸ 11/99 | GRD938 | **731815** | 430 377,5 | ALM |
| 214 | RFH/N ; RFM/N/W | E | 1396 | 14K2F,14K4F4 | M | | | 11/95 ▸ 11/99 | GRD1072 | **731815** | 430 377,5 | ALM |
| 214 | RFM/N/W | E | 1396 | 14K4F4 | M | | | 11/95 ▸ 11/99 | GRD1071 | **734354** | 522 396 | ALB |
| 214<br>▸ 70220 | RFM/N/W | E | 1396 | 14K4F4 | M | - | | 11/95 ▸ | PCC104670 | **731816** | 525 377,5 | ALM |
| 216 | RFYW | E | 1589 | 16K4F4 | M | + | | 11/95 ▸ 11/99 | GRD931 | **731816** | 525 377,5 | ALM |
| 216 | RFMW | E | 1589 | 16K4F4 | M | + | | 11/95 ▸ 11/99 | PCC001660 | **734354** | 522 396 | ALB |
| 216 | RFMW ; RFYW | E | 1589 | 16K4F4 | M | - | | 11/95 ▸ 11/99 | PCC001480 | **731815** | 430 377,5 | ALM |
| 216 | RFYW | E | 1589 | 16K4F4 | M | - | | 11/95 ▸ 11/99 | PCC001660 | **734354** | 522 396 | ALB |
| 216 | RFMW ; RFYW | E | 1589 | 16K4F4 | M | - | | 11/95 ▸ 11/99 | PCC001610 | **731818** | 525 377,5 | ALM |
| 216 | RFMW ; RFYW | E | 1589 | 16K4F4 | M | - | | 11/95 ▸ | GRD924 | **731815** | 430 377,5 | ALM |
| 216 | RFMW ; RFYW | E | 1589 | 16K4F4 | M | | | 11/95 ▸ 11/99 | GRD938 | **731815** | 430 377,5 | ALM |
| 216 | RFMW | E | 1589 | 16K4F4 | M | | | 11/95 ▸ 11/99 | GRD931 | **731816** | 525 377,5 | ALM |
| 216 | RFYW | E | 1589 | 16K4F4 | A | + | | 10/96 ▸ 11/99 | PCC001660 | **734354** | 522 396 | ALB |
| 216 | RFYW | E | 1589 | 16K4F4 | A | - | | 10/96 ▸ 11/99 | PCC104670 | **731816** | 525 377,5 | ALM |
| 216 | RFYW | E | 1589 | 16K4F4 | A | | | 10/96 ▸ 11/99 | GRD931 | **731816** | 525 377,5 | ALM |
| 216 | RFYW | E | 1589 | 16K4F4 | A | | | 10/96 ▸ 11/99 | GRD1072 | **731815** | 430 377,5 | ALM |
| 220 | RFWN | E | 1796 | 18K16 | M | +/- | | 10/96 ▸ 11/99 | PCC104670 | **731816** | 525 377,5 | ALM |
| 220 | RFWN | E | 1796 | 18K16 | M | | | 10/96 ▸ 11/99 | GRD931 | **731816** | 525 377,5 | ALM |
| 220 | RFH/W ; RFM/M/W/Y | D | 1994 | 20T2N,20T2R | M | +/- | TSW | 11/95 ▸ 11/99 | PCC104680 | **731817** | 319 505 | CBS |
| 220 | RFH/W ; RFM/M/W/Y | D | 1994 | 20T2N,20T2R | M | | TSW | 11/95 ▸ 11/99 | GRD930 | **731817** | 319 505 | CBS |
| **200 (96>99)** | | | | | | | | | | | | |
| 200 | XWMB ; XWWC | E | 1589 | 16K4F4 | M | +/- | | 03/96 ▸ 1999 | PCC104670 | **731816** | 525 377,5 | ALM |
| 200 | XWMB ; XWWC | E | 1589 | 16K4F4 | M | | | 03/96 ▸ 1999 | GRD931 | **731816** | 525 377,5 | ALM |
| 200 | XWMB ; XWWC | E | 1589 | 16K4F4 | A | +/- | | 03/96 ▸ 1999 | PCC104670 | **731816** | 525 377,5 | ALM |
| 200 | XWMB ; XWWC | E | 1589 | 16K4F4 | A | | | 03/96 ▸ 1999 | GRD931 | **731816** | 525 377,5 | ALM |
| 200 | 199X ; XWWC | E | 1796 | 18K4K | M | +/- | | 03/96 ▸ 1999 | PCC104670 | **731816** | 525 377,5 | ALM |
| 200 | 199X ; XWWC | E | 1796 | 18K4K | M | | | 03/96 ▸ 1999 | GRD931 | **731816** | 525 377,5 | ALM |
| **400 (90>95)** | | | | | | | | | | | | |
| 414 | XWSL ; XWYL ; XWM/L | E | 1396 | 14K4C,14K4D,14K4F4 | M | + | | 03/90 ▸ 04/95 | GRD145 | | 525 377,5 | ALM |
| 414 | XWSL ; XWYL ; XWM/L | E | 1396 | 14K4C,14K4D,14K4F4 | M | | | > ▸ 04/95 | GRD162 | **732759** | 430 377,5 | ALM |
| 416 | XWSL ; XWM/L ; XWY/L/T ; XWZ/L/T | E | 1590 | D16A7,D16A8,D16A9,D16Z2 | M | | TSW | 03/90 ▸ 04/95 | GRD125 | **730565** | 525 377,5 | ALM |
| 416 | XWSL ; XWYL ; XWZL ; XWM/L | E | 1590 | D16A7,D16A8,D16A9,D16Z2 | A | | | 03/90 ▸ 04/95 | GRD136 | **731210** | 521 380 | CBS |
| 418 | XWSL ; XWM/L ; XWZL ; XWY/L/T | D | 1769 | ICV2L,IOCV2L | M | | | 03/91 ▸ | GRD143 | **731211** | 400 380 | CBS |

Radiator Radiateur Motorkühler Radiatore di raffreddamento Radiator Radyatör Radiador Радиатор vízhűtő Vodní chladič Radiator Ψυγείο



• **New** Nouveau **Nuevo** Novo **Nuovo** Nieuw **Neu** Nowość **Yeni** Новый Νέο **Novy**

# ROVER (.../...)

| Type Ctr. | | CC | | AC | | | OE | Valeo | DIM. | TECH |
|---|---|---|---|---|---|---|---|---|---|---|
| **400 (90>95) (.../...)** | | | | | | | | | | |
| 418 XWML ; XWSL | D | 1905 | IOCU4N | M | | | 10/92 ▸ | GRD143 | **731211** | 400 380 | CBS |
| **400 (95>)** | | | | | | | | | | |
| 414 RTH/W ; RTM/L/W | E | 1396 | 14K4F4 | M | + | | 05/95 ▸ 03/00 | PCC107410 | **731818** | 525 377,5 | ALM |
| 414 RTH/W ; RTM/L/W | E | 1396 | 14K4F4 | M | - | | 05/95 ▸ 03/00 | PCC001480 | **731815** | 430 377,5 | ALM |
| 414 RTH/W ; RTM/L/W | E | 1396 | 14K4F4 | M | - | | 05/95 ▸ 03/00 | PCC001610 | **731818** | 525 377,5 | ALM |
| 414 RTH/W ; RTM/L/W | E | 1396 | 14K4F4 | M | - | | 05/95 ▸ 03/00 | PCC001660 | **734354** | 522 396 | ALB |
| 414 RTH/W ; RTM/L/W | E | 1396 | 14K4F4 | M | | | 05/95 ▸ 03/00 | GRD938 | **731815** | 430 377,5 | ALM |
| 414 RTH/W ; RTM/L/W ▸ YD471063 | E | 1396 | 14K4F4 | M | + | | 05/95 ▸ 03/00 | GRD937 | **731818** | 525 377,5 | ALM |
| 416 RTMW ; RTSL ; RTC/W | E | 1589 | 16K4F4 | M | + | | 05/95 ▸ 03/00 | PCC107410 | **731818** | 525 377,5 | ALM |
| 416 RTMW ; RTSL ; RTC/W | E | 1589 | 16K4F4 | M | - | | 05/95 ▸ 03/00 | PCC001660 | **734354** | 522 396 | ALB |
| 416 RTMW ; RTSL ; RTC/W | E | 1589 | 16K4F4 | M | - | | 05/95 ▸ 03/00 | PCC001610 | **731818** | 525 377,5 | ALM |
| 416 RTMW ; RTSL ; RTC/W | E | 1589 | 16K4F4 | M | - | | 05/95 ▸ 03/00 | PCC001180 | **731815** | 430 377,5 | ALM |
| 416 RTMW ; RTSL ; RTC/W | E | 1589 | 16K4F4 | M | | | 05/95 ▸ 03/00 | GRD1072 | **731815** | 430 377,5 | ALM |
| 416 RTMW ; RTSL ; RTC/W ▸ YD471063 | E | 1589 | 16K4F4 | M | + | | 05/95 ▸ 03/00 | GRD937 | **731818** | 525 377,5 | ALM |
| 416 RTCW ; RTLL | E | 1590 | D16Y3E | A | | TSW | 05/95 ▸ 03/00 | GRD926 | **731458** | 349 346 | ALB |
| 416 RTCW ; RTLL | E | 1590 | D16Y3E | A | | | 05/95 ▸ 03/00 | GRD1072 | **731815** | 430 377,5 | ALM |
| 420 RTMW ; RTSW ; RTZW ; RTC/L/W | E | 1994 | 20T4H | M | +/- | | 11/95 ▸ 03/00 | PCC107410 | **731818** | 525 377,5 | ALM |
| 420 RTMW ; RTSW ; RTZW ; RTC/L/W | E | 1994 | 20T4H | M | | | 11/95 ▸ 03/00 | GRD937 | **731818** | 525 377,5 | ALM |
| 420 RTMW ; RTSW | D | 1994 | 20T2R | M | + | TSW | 11/95 ▸ 03/00 | GRD933 | **734290** | 322 503 | ALM |
| 420 RTMW ; RTSW | D | 1994 | 20T2R | M | | TSW 820832 | 11/95 ▸ 03/00 | GRD932 | **731820** | 319 505 | CBS |
| 420 RTCW ; RTZW | D | 1994 | 20T2N | M | | TSW | 11/95 ▸ 03/00 | GRD933 | **734290** | 322 503 | ALM |
| **600** | | | | | | | | | | |
| 618 RHSL ; RHYL ; RHM/L | E | 1850 | F18A3 | M | | TSW | 03/96 ▸ 06/00 | GRD170 | **731817** | 319 505 | CBS |
| 618 RHSL ; RHYL | E | 1850 | F18A3 | A | | TSW | 03/96 ▸ 06/00 | GRD171 | **731100** | 350 668 | ALB |
| 620 RHWL | E | 1994 | 20T4G | M | | | 07/94 ▸ 06/00 | GRD812 | **731412** | 319 505 | CBS |
| 620 RHSL ; RHYL ; RHZL ; RHM/L | E | 1997 | F20Z1,F20Z2 | M | | TSW | 04/93 ▸ 06/00 | GRD170 | **731817** | 319 505 | CBS |
| 620 RHYL ; RHZL | E | 1997 | F20Z1 | A | | TSW | 04/93 ▸ 06/00 | GRD171 | **731100** | 350 668 | ALB |
| 623 RHWL | E | 2259 | H23A3 | M | | | 10/93 ▸ 06/00 | GRD168 | **732323** | 352 668 | CBS |
| 623 RHWL | E | 2259 | H23A3 | A | | TSW | 10/93 ▸ 06/00 | GRD169 | **731100** | 350 668 | ALB |
| 620 RHSL ; RHYL ; RHZL ; RHM/L | D | 1994 | 20T2N | M | | | 12/94 ▸ 06/00 | GRD922 | **731412** | 319 505 | CBS |
| **800 (86>91)** | | | | | | | | | | |
| 820 XSH/L/W ; XSS/L/W | E | 1994 | 20HD01,M16E,M16I | M | +/- | | 09/86 ▸ 09/91 | GRD135 | **730591** | 625 418 | CBS |
| 820 XSY/L/W | E | 1994 | 20M4G | M | +/- | | 04/91 ▸ 09/91 | GRD137 | | 516 433 | CBS |
| 820 XSH/W ; XSS/L/W | E | 1994 | 20HD02,M16E,M16I | A | +/- | | 09/86 ▸ 09/91 | GRD135 | **730591** | 625 418 | CBS |
| 825 XSZL | E | 2493 | C25A2 | M | +/- | | 09/86 ▸ 02/88 | GRD135 | **730591** | 625 418 | CBS |
| 825 XSZ/L/P | E | 2493 | C25A2 | A | +/- | | 09/86 ▸ 02/88 | GRD138 | **730970** | 625 418 | CBS |
| 827 XSWW ; XSZL ; XSC/W | E | 2675 | C27A1,C27A2 | M | +/- | | 09/87 ▸ 09/91 | GRD135 | **730591** | 625 418 | CBS |
| 827 XSWW ; XSZL ; XSC/W | E | 2675 | C27A1,C27A2 | A | +/- | | 09/87 ▸ 09/91 | GRD135 | **730591** | 625 418 | CBS |
| 825 XSH/L/W ; XSS/L/W | D | 2498 | 97A | M | +/- | | 07/89 ▸ 09/91 | GRD137 | | 516 433 | CBS |
| **800 (91>98)** | | | | | | | | | | |
| 820 RSSL ; RSWL | E | 1994 | 20T4G,20T4GG | M | +/- | | 10/91 ▸ 09/98 | GRD148 | | 512 419 | |
| 820 RSH/L/W ; RSWL ; RSS/L/W | E | 1994 | 20T4GG,20T4H | M | +/- | | 10/91 ▸ 09/98 | GRD135 | **730591** | 625 418 | CBS |
| 820 RSH/L/W ; RSS/L/W | E | 1994 | 20T4H | A | +/- | | 10/91 ▸ 09/98 | GRD135 | **730591** | 625 418 | CBS |
| 825 RSHL ; RSSL | E | 2497 | 25KV6F-175 | M | +/- | | 12/96 ▸ 09/98 | GRD936 | | 653 460 | CBS |
| 825 RSSL ; RSZL | E | 2497 | 25KV6F-175 | A | +/- | | 12/96 ▸ 09/98 | GRD936 | | 653 460 | CBS |
| 827 RSC/C/L ; RSS/L/W | E | 2675 | C27A1,C27A2 | M | +/- | | 10/91 ▸ 12/95 | GRD135 | **730591** | 625 418 | CBS |
| 827 RSC/C/L/W ; RSS/L/W | E | 2675 | C27A1,C27A2 | A | | | 10/91 ▸ 12/95 | GRD135 | **730591** | 625 418 | CBS |
| 825 RSH/L/W ; RSS/L/W | D | 2498 | 97A | M | +/- | | 10/91 ▸ 12/95 | GRD137 | | 516 433 | CBS |
| 825 RSH/L/W ; RSS/L/W | D | 2498 | 97A | M | +/- | | 01/96 ▸ 09/98 | GRD935 | | 512 418 | |
| **MAESTRO** | | | | | | | | | | |
| 1.3 XCHW ; XCMW ; XCSW ; XCD/W | E | 1275 | 12H959,12HA04,12HA20 | M | - | | 03/83 ▸ 02/86 | GRD130 | | 500 250 | CBS |
| 1.3 XCDW | E | 1275 | 12H | M | - | | 10/84 ▸ 03/90 | GRD108 | | 500 285 | ALM |
| 1.3 XCHW ; XCJW ; XCMW ; XCRW ; XCSW ; XCD/W | E | 1275 | 12HC32,12HC34,12HE | M | - | | 01/86 ▸ 10/94 | GRD107 | | 400 285 | ALM |
| 1.3 XCHW ; XCJW | E | 1275 | 12HE,12HF | M | | | 07/89 ▸ 10/94 | GRD107 | | 400 285 | ALM |
| 1.6 XCTW ; XCWW ; XCS/W | E | 1598 | 16H,16H956,16HA03,16HB77 ROVE10 | M | - | | 03/83 ▸ 04/92 | GRD129 | | 500 285 | ALM |
| 1.6 XCPW ; XCWW ; XCM/W | E | 1598 | 16H,16HC37,ROVE10 | M | - | | 10/84 ▸ 03/90 | GRD108 | | 500 285 | ALM |
| 1.6 | E | 1598 | 16HA01,16HA36 | A | - | | 10/83 ▸ 12/85 | GRD129 | | 500 285 | ALM |
| 1.6 | E | 1598 | 16H,16HC38 | A | - | | 01/86 ▸ 04/92 | GRD108 | | 500 285 | ALM |
| 2.0 i XCTW ▸ 452158 | E | 1994 | 20HA51 | M | - | PIP+ TSW | > ▸ 12/85 | GRD116 | **730595** | 600 285 | ALM |

| Type Ctr. | | CC | | AC | | 2+3 | OE | Valeo | DIM. | TECH |
|---|---|---|---|---|---|---|---|---|---|---|
| **ROVER (.../...)** | | | | | | | | | | |
| **MAESTRO (.../...)** | | | | | | | | | | |
| 2.0,2.0 i,2.0 i Turbo | E | 1994 | 20HA50,20HA51,20HB63,20HC78 | M | - | PIP+ TSW | 03/83 ▸ | GRD133 | **730595** | 600 285 ALM |
| 2.0 D XCGH | D | 1994 | BA | M | - | PIP+ TSW | 10/87 ▸ 01/95 | GRD133 | **730595** | 600 285 ALM |
| 2.0 D,2.0 TD XCHW ; XCMW | D | 1994 | BA,BB | M | | PIP+ TSW | 03/90 ▸ 01/95 | GRD133 | **730595** | 600 285 ALM |
| **METRO** | | | | | | | | | | |
| 1000 XBFN ; XBHN ; XBLN ; XBPN ; XBA/N 872398 ▸ | E | 998 | 99H,99H907P,99H929P,99H962P | M | - | | > ▸ 09/84 | GRD111 | **730119** | 500 229,5 ALM |
| 1000 XFD/N/W ; XFH/N/W ; XFYW ; XFM/N/W | E | 998 | 99H | M | - | | 10/84 ▸ 04/90 | GRD105 | **730119** | 500 229,5 ALM |
| 1000 XBFN ; XBHN ; XBLN ; XBPN ; XBA/N ▸ 872397 | E | 998 | 99H,99H907P,99H929P,99H962P | M | - | | 10/80 ▸ | ARP1169 | | 500 266 CBS |
| 1.1 XPD/N ; XPH/N/W ; XPM/N/W | E | 1129 | 11K2A | M | - | | 05/90 ▸ 09/92 | GRD139 | **731215** | 497 234 CBS |
| 1.1,1.1 i XPD/N/W ; XPH/N/W XPM/N/W | E | 1129 | 11K2A,11K2B,11K2D | M | | | 05/90 ▸ 01/95 | GRD146 | **731215** | 497 234 CBS |
| 1300,1300 Turbo XBHN ; XBRN ; XBZN XBG/N | E | 1275 | 12H,12H907AA,12H959AA 12H996AA | M | - | | > ▸ 09/84 | GRD111 | **730119** | 500 229,5 ALM |
| 1300,1300 Turbo XFH/N/W ; XFWN XFXD ; XFYW ; XFZW ; XFM/N/W | E | 1275 | 12H,12HC14,12HC15,12HD26 | M | - | | 10/84 ▸ 04/90 | GRD105 | **730119** | 500 229,5 ALM |
| 1300 XFMN ; XFSN | E | 1275 | 12H907AA | A | - | | 07/86 ▸ 04/90 | GRD105 | **730119** | 500 229,5 ALM |
| 1300 XBHN ; XBRN ; XBG/N ▸ 872397 | E | 1275 | 12H,12H907AA,12H996AA | M | - | | 02/81 ▸ | ARP1169 | | 500 266 CBS |
| 1.4 XPYN ; XPZW ; XPS/N | E | 1396 | 14K2A | M | - | | 05/90 ▸ 09/92 | GRD139 | **731215** | 497 234 CBS |
| 1.4 i 16V XPWN | E | 1396 | 14K4C | M | - | | 09/90 ▸ 06/91 | GRD147 | **731215** | 497 234 CBS |
| 1.4,1.4 i,1.4 i 16V XPM/N/W ; XPWN ; XPS N/W ; XPZW ; XPY/N/W | E | 1396 | 14K2A,14K2B,14K2D,14K4C,14K4D 14K4F4 | M | | | 05/90 ▸ 01/95 | GRD146 | **731215** | 497 234 CBS |
| 1.4 i XPH/N/W ; XPM/N/W ; XPYW ; XPZW ; XPS/N/W | E | 1396 | 14K2D | A | | | 02/92 ▸ 01/95 | GRD146 | **731215** | 497 234 CBS |
| 1.4 D XPF/N/W ; XPH/N/W ; XPZ/N/W | D | 1360 | 10FTO FO | M | | | 05/92 ▸ 01/95 | GRD979 | **731215** | 497 234 CBS |
| **MINI** | | | | | | | | | | |
| 850 XK2S | E | 848 | 85H | M | - | | 10/80 ▸ 09/82 | GRD110 | **730172** | 270 265 CBS |
| 1000 XFNN ; XL2S | E | 998 | 99H,99HG31 | M | - | | 04/70 ▸ 08/90 | GRD110 | **730172** | 270 265 CBS |
| 1000 XL2S | E | 998 | 99H,ROVE13 | A | - | | 09/73 ▸ 08/90 | GRD110 | **730172** | 270 265 CBS |
| 1100 XC2S | E | 1097 | 10H | M | - | | 10/80 ▸ 09/82 | GRD110 | **730172** | 270 265 CBS |
| 1.3,1.3 i XNWA ; XNN/A/B ; XNY A/B | E | 1275 | 12A2A,12A2B,12A2D,12A2E,12A2L | M | +/- | | 09/90 ▸ 1996 | PCC103980 | **731409** | 280 367 CBS |
| 1.3,1.3 i,1275 XNN/A/B ; XNY/A/B | E | 1275 | 12A2A,12A2B,12A2D,12A2E,12H | M | - | | 1970 ▸ 1996 | GRD110 | **730172** | 270 265 CBS |
| 1.3 XNWA | E | 1275 | 12A2B | A | +/- | | 06/92 ▸ 1996 | PCC103980 | **731409** | 280 367 CBS |
| **MONTEGO** | | | | | | | | | | |
| 1300 XEML ; XESL ; XEH/L | E | 1275 | 12HA37 | M | - | | 05/84 ▸ 1992 | GRD107 | | 400 285 ALM |
| 1600 XEM/L/M ; XEWL ; XES/L/M | E | 1598 | 16HA35,16HA35S | M | - | | 05/84 ▸ 12/94 | GRD108 | | 500 285 ALM |
| 2000 XEM/L/M ; XES/L/M ; XEW/L/M | E | 1994 | 20HA30,20HA30/B43,20HB43 | M | - | | 05/84 ▸ 12/94 | GRD108 | | 500 285 ALM |
| 2000 i XEWM ; XEYL ; XEM/L M ; XEZ/L/M | E | 1994 | 20HA,20HB59,20HB69/B78,20HD55 | M | - | PIP+ TSW | 02/85 ▸ 12/94 | GRD133 | **730595** | 600 285 ALM |
| 2000 XEZL | E | 1994 | 20HA30 | A | - | | 05/84 ▸ 1986 | GRD108 | | 500 285 ALM |
| 2000 i XEYL ; XEZL | E | 1994 | 20HB55,20HB60 | A | - | PIP+ TSW | 02/85 ▸ 1992 | GRD133 | **730595** | 600 285 ALM |
| 2000 TD XEZM ; XES/L/M | D | 1994 | BB | M | - | PIP+ TSW | 10/88 ▸ 12/94 | GRD133 | **730595** | 600 285 ALM |
| **STREETWISE** | | | | | | | | | | |
| 1.4 i 16V | E | 1396 | 14K4F4 | M | +/- | | 08/03 ▸ 04/05 | PCC001660 | **734354** | 522 396 ALB |
| 1.4 i 16V 728653 ▸ | E | 1396 | 14K4F4 | M | + | | 09/03 ▸ 04/05 | PCC107681 | **734354** | 522 396 ALB |
| 1.4 i 16V 728653 ▸ | E | 1396 | 14K4F4 | M | - | | 09/03 ▸ 04/05 | PCC001480 | **731815** | 430 377,5 ALM |
| 1.4 i 16V ▸ 728652 | E | 1396 | 14K4F4 | M | + | | 09/03 ▸ | PCC107680 | **734354** | 522 396 ALB |
| 1.6 i 16V | E | 1588 | 16K4F4 | M | + | | 08/04 ▸ 04/05 | PCC001660 | **734354** | 522 396 ALB |
| 1.8 i 16V | E | 1796 | 18K4 | A | + | | 08/04 ▸ 04/05 | PCC001660 | **734354** | 522 396 ALB |
| 2.0 D | D | 1996 | 20T2N | M | | TSW | 09/03 ▸ 04/05 | PCC113540 | **731817** | 319 505 CBS |
| **SAAB** | | | | | | | | | | |
| **9-3 (98>2003)** | | | | | | | | | | |
| 2.0 i 16V,2.0 i Turbo 16V DC/35H/35J | E | 1985 | B204I,B204L | M | + | | 04/98 ▸ 05/03 | 4729562 | **732120** | 500 348,2 ALB |
| 2.0 i 16V,2.0 i Turbo 16V DC/35H/35J | E | 1985 | B204I,B204L | M | - | | 04/98 ▸ 05/03 | 4729554 | | 500 348 ALB |

Radiator Radiateur Motorkühler Radiatore di raffreddamento Radyatör Radiator Радиатор Radiador vízhűtő Vodní chladič Radiator Ψυγείο



• **New** Nouveau **Nuevo** Novo **Nuovo** Nieuw **Neu** Nowość **Yeni** Новый Νέο **Novy**

| Type Ctr. | | CC | | AC | | | OE | Valeo | DIM. | TECH |
|---|---|---|---|---|---|---|---|---|---|---|

# SAAB (.../...)

## 9-3 (98>2003) (.../...)

| | | | | | | | | | | | |
|---|---|---|---|---|---|---|---|---|---|---|---|
| 2.0 i Turbo 16V DC35H | E | 1985 | B204L | M | | | 04/98 ▸ 05/03 | 4729596 | **732123** | 500 350 | ALB |
| 2.0 i Turbo 16V | E | 1985 | B204L | A | - | | 04/98 ▸ 05/03 | 4729596 | **732123** | 500 350 | ALB |
| 2.3 i 16V | E | 2290 | B234I | M | + | | 04/98 ▸ 12/00 | 4729562 | **732120** | 500 348,2 | ALB |
| 2.3 i 16V | E | 2290 | B234I | M | - | | 04/98 ▸ 12/00 | 4729554 | | 500 348 | ALB |
| 2.2 TiD DC35D | D | 2172 | X22DTH | M | + | | 05/98 ▸ 11/00 | 4729588 | **732122** | 500 347 | ALB |
| 2.2 TiD | D | 2172 | X22DTH | M | - | | 05/98 ▸ 11/00 | 4729562 | **732120** | 500 348,2 | ALB |

## 9-3 (2002>)

| | | | | | | | | | | | |
|---|---|---|---|---|---|---|---|---|---|---|---|
| 1.8 t Turbo 16V,2.0 t Turbo 16V | F | 1998 | B207L,B207R | M | +/- | | 07/07 ▸ | 24418338 | **732879** | 649,4 403,3 | ALM |
| 1.8 t Turbo 16V,2.0 t Turbo 16V | F | 1998 | B207L,B207R | A | +/- | | 07/07 ▸ | 24418342 | **732947** | 649 414,5 | ALB |
| 1.8 i 16V FB55B | E | 1796 | Z18XE | M | | | 11/03 ▸ | 24418338 | **732879** | 649,4 403,3 | ALM |
| 1.8 t Turbo 16V FB/45F/45S/45Y/55F<br>2.0 t Turbo 16V 75F/75S ; FD/45F/45S<br>45Y ; FF/45F/45S | E | 1998 | B207E,B207L,B207R | M | + | | 09/02 ▸ | 24418338 | **732879** | 649,4 403,3 | ALM |
| 1.8 t Turbo 16V FB/49F/49S/49Y/59F<br>2.0 t Turbo 16V 59S/59Y/79F ; FD/49F<br>49S/49Y ; FF/49F/49S | E | 1998 | B207E,B207L,B207R | A | + | | 09/02 ▸ | 24418342 | **732947** | 649 414,5 | ALB |
| 1.8 t Turbo 16V FB/45F/45S/75F/75S<br>2.0 t Turbo 16V FD/45F/45S ; FF/45F<br>45S<br>▸ 41040102 | E | 1998 | B207E,B207L,B207R | M | + | | 09/02 ▸ 2004 | 24418341 | **732876** | 650 414,5 | ALB |
| 2.0 t Turbo 16V FD/41M/51M/56M | E | 2290 | B235R | M | + | | 06/05 ▸ | 12805055 | •**735131** | 470 672 | ALB |
| 2.8 t V6 24V | E | 2792 | B284L | M | + | TSW | 06/05 ▸ | 12805057 | •**735083** | 650 414,5 | ALB |
| 2.8 t V6 24V | E | 2792 | B284, B284L | M | + | | 06/08 ▸ | 12805055 | •**735131** | 470 672 | ALB |
| 2.8 t V6 24V | E | 2792 | B284,B284L | A | + | TSW | 06/05 ▸ | 12805057 | •**735083** | 650 414,5 | ALB |
| 2.8 t V6 24V | E | 2792 | B284L | A | +/- | | 06/05 ▸ | 12805055 | •**735131** | 470 672 | ALB |
| 1.9 TiD,1.9 TiD 16V | D | 1910 | Z19DT,Z19DTH | M | + | | 06/04 ▸ | 24418345 | **734339** | 649 414,5 | ALB |
| 1.9 TiD,1.9 TiD 16V | D | 1910 | Z19DT,Z19DTH | M | | | 06/04 ▸ 12/05 | 24418345 | **734339** | 649 414,5 | ALB |
| 1.9 TiD 16V | D | 1910 | Z19DTH | A | + | | 06/04 ▸ | 13156387 | **734345** | 649 414,5 | ALB |
| 1.9 TiD 16V | D | 1910 | Z19DTH | A | + | | 01/06 ▸ | 13200486 | •**735086** | 649 414,5 | ALB |
| 1.9 TTiD | D | 1910 | Z19D | A | | | 12/07 ▸ | 12775540 | •**735129** | 420,5 649,4 | ALB |
| 1.9 TTiD | D | 1910 | Z19D | M | | | 12/07 ▸ | 12775541 | •**735130** | 414 649 | ALB |
| 2.2 TiD 16V FB/45D/46D ; FD/45D<br>46D | D | 2171 | D223L-125 | M | + | | 09/02 ▸ | 24418341 | **732876** | 650 414,5 | ALB |
| 2.2 TiD 16V FB/45D/46D ; FD/45D<br>46D | D | 2171 | D223L-125 | M | + | | 2004 ▸ | 24418338 | **732879** | 649,4 403,3 | ALM |

## 9-5 (97>2001)

| | | | | | | | | | | | |
|---|---|---|---|---|---|---|---|---|---|---|---|
| 2.0 i Turbo 16V 640 | E | 1985 | B205E,B205R | M | +/- | | 09/97 ▸ 08/01 | 4575700 | **734714** | 607 374 | ALB |
| 2.0 i Turbo 16V 640 | E | 1985 | B205E,B205R | A | +/- | | 09/97 ▸ 08/01 | 4575718 | **734830** | 607 374 | ALB |
| 2.3 i Turbo 16V 640 ; EH45G | E | 2290 | B235E,B235R | M | +/- | | 09/97 ▸ 08/01 | 4575700 | **734714** | 607 374 | ALB |
| 2.3 i Turbo 16V 640 | E | 2290 | B235E,B235R | A | +/- | | 09/97 ▸ 08/01 | 4575718 | **734830** | 607 374 | ALB |
| 3.0 i V6 Turbo 24V 640 | E | 2962 | B308E | A | +/- | | 01/98 ▸ 08/01 | 4575734 | **734831** | 607 374 | ALB |
| 3.0 i V6 Turbo 24V 640 | E | 2962 | B308E | A | | | 10/98 ▸ 08/01 | 4575734 | **734831** | 607 374 | ALB |

## 9-5 (2001>2005)

| | | | | | | | | | | | |
|---|---|---|---|---|---|---|---|---|---|---|---|
| 2.0 i Turbo 16V | E | 1985 | B205E-D4,B205E-E2 | M | +/- | | 09/01 ▸ 01/05 | 5193370 | **734714** | 607 374 | ALB |
| 2.0 i Turbo 16V | E | 1985 | B205E-D4,B205E-E2 | A | +/- | | 09/01 ▸ 01/05 | 5193388 | **734830** | 607 374 | ALB |
| 2.3 T Turbo 16V,2.3 i Turbo 16V | E | 2290 | B235E,B235L-D4,B235L-E2 | M | +/- | | 09/01 ▸ 01/05 | 5193370 | **734714** | 607 374 | ALB |
| 2.3 i Turbo 16V | E | 2290 | B235R-D4,B235R-E2 | M | | | 09/01 ▸ 11/05 | 5193370 | **734714** | 607 374 | ALB |
| 2.3 T Turbo 16V,2.3 i Turbo 16V | E | 2290 | B235E,B235L-D4,B235L-E2 | A | +/- | | 09/01 ▸ 01/05 | 5193388 | **734830** | 607 374 | ALB |
| 2.3 i Turbo 16V | E | 2290 | B235R-D4,B235R-E2 | A | | | 09/01 ▸ 11/05 | 5193388 | **734830** | 607 374 | ALB |
| 3.0 i V6 Turbo 24V | E | 2962 | B308E | A | | | 09/01 ▸ 08/03 | 4575734 | **734831** | 607 374 | ALB |
| 2.2 TiD | D | 2171 | D223L | M | +/- | | 02/02 ▸ 01/05 | 4575734 | **734831** | 607 374 | ALB |
| 2.2 TiD | D | 2171 | D223L | A | +/- | | 02/02 ▸ 01/05 | 4575734 | **734831** | 607 374 | ALB |
| 3.0 TiD V6 | D | 2962 | D308L | M | +/- | | 09/01 ▸ 01/05 | 4575734 | **734831** | 607 374 | ALB |

## 9-5 (2005>2010)

| | | | | | | | | | | | |
|---|---|---|---|---|---|---|---|---|---|---|---|
| 2.0 i Turbo 16V | F | 1985 | B205L-FF | M | + | | 02/06 ▸ 07/09 | 5193370 | **734714** | 607 374 | ALB |
| 2.0 i Turbo 16V | F | 1985 | B205L-FF | A | +/- | | 02/06 ▸ 07/09 | 5193388 | **734830** | 607 374 | ALB |
| 2.0 i Turbo 16V | E | 1985 | B205E-E4 | M | + | | 02/06 ▸ 02/07 | 5193370 | **734714** | 607 374 | ALB |
| 2.0 i Turbo 16V | E | 1985 | B205E-E4 | A | +/- | | 02/06 ▸ 02/07 | 5193388 | **734830** | 607 374 | ALB |
| 2.3 i Turbo 16V | E | 2290 | B235E,B235R | M | + | | 11/05 ▸ 07/09 | 5193370 | **734714** | 607 374 | ALB |
| 2.3 i Turbo 16V | E | 2290 | B235E,B235R | A | +/- | | 11/05 ▸ 07/09 | 5193388 | **734830** | 607 374 | ALB |
| 1.9 TiD Turbo 16V | D | 1910 | Z19DTH | A | + | | 11/05 ▸ | 4357794 | **732123** | 500 350 | ALB |
| 1.9 TiD Turbo 16V | D | 1910 | Z19DTH | A | | | 11/05 ▸ 07/09 | 4575734 | **734831** | 607 374 | ALB |

## 900 (79>93)

| | | | | | | | | | | | |
|---|---|---|---|---|---|---|---|---|---|---|---|
| 2.0,2.0 i,2.0 i 16V AC/35D/45D/55D/75D<br>AH/25J/35J ; AL/35C/44C/45C ; AM/25J/35J<br>45J/55J | E | 1985 | B201C,B201I,B202I | M | +/- | | 09/83 ▸ 06/93 | 7549280 | | 595 320 | ALB |

| Type Ctr. | | CC | | AC | | | OE | Valeo | DIM. | TECH |
|---|---|---|---|---|---|---|---|---|---|---|
| **SAAB (.../...)** | | | | | | | | | | |
| **900 (79>93) (.../...)** | | | | | | | | | | |
| 2.0,2.0 T Turbo<br>2.0 T Turbo 16V | AM55T ; AD/35S/55S 75L/75S ; AT/35L/35S 45L/45S/55L/55S/75L | E | 1985 | B201S,B201T,B202L,B202S | M | +/- | TSW 819759 | 09/83 ▸ 06/93 | 7549298 | **810965** | 595 320 | |
| 2.0,2.0 i | AE/43S ; AS33S ; AG 31S/33S/51S | E | 1985 | B20C,B20I | M | - | | 10/80 ▸ 1983 | 7549280 | | 595 320 | ALB |
| 2.0,2.0 T Turbo | AG/42S/52S ; AT/34S 44S/54S | E | 1985 | B20S,B20T | M | - | TSW 819759 | 10/80 ▸ 1983 | 7549298 | **810965** | 595 320 | |
| 2.0 | AM55T ; AG/42S/52S | E | 1985 | B201T,B20T | M | | | 10/80 ▸ 1989 | 7549280 | | 595 320 | ALB |
| 2.0,2.0 i,2.0 i 16V | AH26J ; AL56C ; AC 36D/46D/56D/76D ; AM/36J/46J/56J | E | 1985 | B201C,B201I,B202I | A | +/- | | 09/83 ▸ 06/93 | 7549280 | | 595 320 | ALB |
| 2.0 T Turbo<br>2.0 T Turbo 16V | AE66S ; AD/36S/56S 76L ; AT/36S/46S/56S | E | 1985 | B201S,B202L,B202S | A | +/- | TSW 819759 | 09/83 ▸ 06/93 | 7549298 | **810965** | 595 320 | |
| 2.0 T Turbo | AT44 | E | 1985 | B20S | A | - | TSW 819759 | 10/81 ▸ 1983 | 7549298 | **810965** | 595 320 | |
| 2.0 i | AE43 | E | 1985 | B20I | A | - | | 10/81 ▸ 1983 | 7549280 | | 595 320 | ALB |
| **900 (93>)** | | | | | | | | | | | | |
| 2.0 16V,2.0 Turbo 16V | DC/35A/55A ; DD/35N 55N ; DX/35J/35N/55J/55N/75N | E | 1985 | B204I,B204L,B206I | M | + | | 07/93 ▸ 02/98 | 4729562 | **732120** | 500 348,2 | ALB |
| 2.0 16V,2.0 Turbo 16V | DC/35A/55A ; DD/35N 55N ; DX/35J/35N/55J/55N/75N | E | 1985 | B204I,B204L,B206I | M | - | | 07/93 ▸ 02/98 | 4729554 | | 500 348 | ALB |
| 2.3 16V | DC/35B/55B ; DX/35B 55B/75B | E | 2290 | B234I | M | + | | 07/93 ▸ 02/98 | 4729562 | **732120** | 500 348,2 | ALB |
| 2.3 16V | DC/35B/55B ; DX/35B 55B/75B | E | 2290 | B234I | M | - | | 07/93 ▸ 02/98 | 4729554 | | 500 348 | ALB |
| 2.5 V6 | DC55V | E | 2498 | B258I | M | + | | 07/93 ▸ 02/98 | 4357927 | **732122** | 500 347 | ALB |
| 2.5 V6 | DC55V | E | 2498 | B258I | M | - | | 07/93 ▸ 02/98 | 4729562 | **732120** | 500 348,2 | ALB |
| 2.5 V6 | DC/58V ; DX/55V/58V | E | 2498 | B258I | A | +/- | | 07/93 ▸ 02/98 | 4357794 | **732123** | 500 350 | ALB |
| 2.5 V6 | DC/58V ; DX/55V/58V | E | 2498 | B258I | A | | | 07/93 ▸ 02/98 | 4729596 | **732123** | 500 350 | ALB |
| **9000** | | | | | | | | | | | | |
| 2.0 i 16V<br>R1018610 ▸ | CC/65J ; CX/45J/65J | E | 1985 | B202I,B204I | M | +/- | | > ▸ 07/98 | 4358040 | | 497 406 | |
| 2.0 Turbo 16V | CT55L ; CD/45L/55L 65L | E | 1985 | B202L | M | + | | 06/84 ▸ 07/93 | 9382656 | | 550 400 | |
| 2.0 Turbo 16V | CT58L ; CD/48L/58L | E | 1985 | B202L | A | + | | 06/84 ▸ 07/93 | 7550098 | | 550 400 | ALB |
| 2.3 T Turbo 16V,2.3 i 16V<br>R1018610 ▸ | CD/65G ; CX/45B/45M 45U/65B/65G/65M/65U | E | 2290 | B234E,B234I,B234L,B235R | M | +/- | | > ▸ 07/98 | 4358040 | | 497 406 | |
| 2.3 T Turbo 16V<br>R1018610 ▸ | CD/45M/45U/55M/65M 65U | E | 2290 | B234E,B234L | M | | | > ▸ 07/94 | 4358040 | | 497 406 | |
| 2.3 T Turbo 16V,2.3 i 16V<br>R1018610 ▸ | CX/48M/68B/68M/68U | E | 2290 | B234E,B234I,B234L | A | +/- | | > ▸ 07/98 | 4358040 | | 497 406 | |
| 2.3 T Turbo 16V | CD/48M/58M/68M/68U | E | 2290 | B234E,B234L | A | | | > ▸ 07/94 | 4358040 | | 497 406 | |
| **SANTANA** | | | | | | | | | | | | |
| **SAMURAI** | | | | | | | | | | | | |
| 1.3,1.3 i | S413S2 ; SJL00C SJS00V ; SJS00C | E | 1298 | G13B,G13BA | M | | | 10/91 ▸ 1994 | 17700C83001 | | 364 390 | CBS |
| **VITARA** | | | | | | | | | | | | |
| 1.6 i 16V | ETW01V | E | 1590 | G16BC | M | | | 07/93 ▸ 1995 | 1770056B00 | **734662** | 425 490 | CBS |
| **SEAT** | | | | | | | | | | | | |
| **ALHAMBRA** | | | | | | | | | | | | |
| 1.8 i 20V | 7V8/3J5/9J5 | E | 1781 | AJH | M | +/- | TSW 820035 | 10/98 ▸ 05/00 | 7M0121253K | **732797** | 646,6 377,5 | ALM |
| 1.8 i Turbo 20V | 7V9/3B3/5B3/9B3 | E | 1781 | AWC | M | +/- | TSW | 06/00 ▸ 05/03 | 7M3121253B | **732790** | 635 377 | ALB |
| 1.8 i 20V | 7V8/3J5/3J8/9J8 | E | 1781 | AJH | A | +/- | TSW 820035 | 05/98 ▸ 05/00 | 7M0121253K | **732797** | 646,6 377,5 | ALM |
| 1.8 i Turbo 20V | 7V9/3B9/5B9/9B9 | E | 1781 | AWC | A | +/- | TSW | 06/00 ▸ 05/03 | 7M3121253B | **732790** | 635 377 | ALB |
| 2.0 i | 7V8/355/3S5/9S5 | E | 1984 | ADY | M | +/- | TSW 820035 | 03/96 ▸ 05/00 | 7M0121253B | **731386** | 646 377 | ALM |
| 2.0 i | 7V9/2A3/3A3/5A3 | E | 1984 | ATM | M | +/- | TSW | 06/00 ▸ 05/03 | 7M3121253B | **732790** | 635 377 | ALB |
| 2.0 i | 7V8/3S8/9S8 | E | 1984 | ADY | A | +/- | TSW 820035 | 03/96 ▸ 05/00 | 7M0121253B | **731386** | 646 377 | ALM |
| 2.0 i | 7V9/2A8/3A8 | E | 1984 | ATM | A | +/- | TSW | 06/00 ▸ 05/03 | 7M3121253B | **732790** | 635 377 | ALB |
| 2.8 i VR6 24V | 7V9/3D3/3D7/5D3/5D7 9D3/9D7 | E | 2792 | AUE,AYL | M | +/- | TSW 820035 | 06/00 ▸ 05/03 | 7M3121253A | **732786** | 635 469,5 | ALB |

Radiator Radiateur Motorkühler Radiatore di raffreddamento Radyatör Radiator Радиатор vízhűtő Vodní chladič Radiator Ψυγείο



• **New** Nouveau **Nuevo** Novo **Nuovo** Nieuw **Neu** Nowość **Yeni** Новый Νέο **Novy**

| | Type Ctr. | | CC | | | AC | | | OE | Valeo | DIM. | TECH |
|---|---|---|---|---|---|---|---|---|---|---|---|---|

# SEAT (.../...)

## ALHAMBRA (.../...)

| | | | | | | | | | | | | |
|---|---|---|---|---|---|---|---|---|---|---|---|---|
| 2.8 i VR6 24V | 7V9/3D7/3D9/5D7/5D9 9D7/9D9 | E | 2792 | AUE,AYL | A | +/- | TSW 820035 | 06/00 ▸ 05/03 | 7M3121253A | 732786 | 635 469,5 | ALB |
| 1.9 TDi | 7V8/385/3X5/985/9X5 | D | 1896 | 1Z,AFN,AHU | M | +/- | TSW 820035 | 03/96 ▸ 05/00 | 7M0121253B | 731386 | 646 377 | ALM |
| 1.9 TDi | 7V9/2U3/3T3/3T7/3U3 5T3/5T7/9T3/9T7/9U3 | D | 1896 | ANU,AUY | M | +/- | TSW | 06/00 ▸ 05/03 | 7M3121253B | 732790 | 635 377 | ALB |
| 1.9 TDi | 7V9/3C3/5C3/9C3 | D | 1896 | ASZ | M | | TSW | 11/02 ▸ 05/03 | 7M3121253B | 732790 | 635 377 | ALB |
| 1.9 TDi | 7V8/388/988 | D | 1896 | AFN | A | +/- | TSW 820035 | 09/97 ▸ 05/00 | 7M0121253B | 731386 | 646 377 | ALM |
| 1.9 TDi | 7V9/3T7/3T9/5T9/9T7 9T9 | D | 1896 | AUY | A | +/- | TSW | 06/00 ▸ 05/03 | 7M3121253B | 732790 | 635 377 | ALB |

## ALHAMBRA II (2003>2010)

| | | | | | | | | | | | | |
|---|---|---|---|---|---|---|---|---|---|---|---|---|
| 1.8 i Turbo 20V | 7V9/3B3/5B3/9B3 | E | 1781 | AWC | M | + | TSW | 06/03 ▸ 03/10 | 7M3121253B | 732790 | 635 377 | ALB |
| 1.8 i Turbo 20V | 7V9/3B9/5B9/9B9 | E | 1781 | AWC | A | + | TSW | 06/03 ▸ 03/10 | 7M3121253B | 732790 | 635 377 | ALB |
| 2.0 i | 7V9/3A3/5A3 | E | 1984 | ATM | M | +/- | TSW | 06/03 ▸ 03/10 | 7M3121253B | 732790 | 635 377 | ALB |
| 2.0 i | 7V9/2A8/3A8 | E | 1984 | ATM | A | +/- | TSW | 06/03 ▸ 03/10 | 7M3121253B | 732790 | 635 377 | ALB |
| 2.8 i VR6 24V | 7V99D3 | E | 2792 | AYL | M | +/- | TSW 820035 | 06/03 ▸ 03/10 | 7M3121253A | 732786 | 635 469,5 | ALB |
| 2.8 i VR6 24V | 7V9/3D3/3D7/5D3/5D7 9D3/9D7 | E | 2792 | AYL | M | + | TSW 820035 | 06/03 ▸ 03/10 | 7M3121253A | 732786 | 635 469,5 | ALB |
| 2.8 i VR6 24V | 7V9/3D9/5D9/9D9 | E | 2792 | AYL | A | + | TSW 820035 | 06/03 ▸ 03/10 | 7M3121253A | 732786 | 635 469,5 | ALB |
| 1.9 TDi | 7V9/3T3/3T7/3U3/5T3 5T7/9T3/9T7/9U3 | D | 1896 | ANU,AUY,BVK | M | +/- | TSW | 06/03 ▸ 03/10 | 7M3121253B | 732790 | 635 377 | ALB |
| 1.9 TDi | 7V9/3T9/5T9/9T9 | D | 1896 | AUY | A | +/- | TSW | 06/03 ▸ 03/10 | 7M3121253B | 732790 | 635 377 | ALB |

## ALTEA (2004>2009)

| | | | | | | | | | | | | |
|---|---|---|---|---|---|---|---|---|---|---|---|---|
| 1.4 i 86 16V | 5P11H2 ; 5P51E2 | E | 1390 | BXW | M | | TSW | 05/06 ▸ 03/09 | 1K0121251P | 734332 | 640 414,5 | ALM |
| 1.4 TSi 125 16V | 5P1/2H1 ; 5P5/1H1 2H1 | E | 1390 | CAXC | M | | TSW | 11/07 ▸ 03/09 | 1K0121253AP | 732872 | 650 414,5 | ALM |
| 1.6 i 102 | 5P1/1D2/2D2 | E | 1595 | BGU | M | + | TSW | 03/04 ▸ | 1K0121251E | 734335 | 640 414,5 | ALM |
| 1.6 i 102 | 5P1/1D2/2D2 | E | 1595 | BGU | M | + | TSW | 03/04 ▸ 05/05 | 1K0121251AR | 735120 | 650 414,5 | ALM |
| 1.6 i 102 | 5P1/1D2/2D2 | E | 1595 | BGU | M | - | TSW | 03/04 ▸ 05/05 | 1K0121251P | 734332 | 640 414,5 | ALM |
| 1.6 i 102 | 5P1/1D2/2D2 ; 5P5 1D2/2D2/2J1 | E | 1595 | BSE,BSF | M | | TSW | 05/05 ▸ 03/09 | 1K0121251P | 734332 | 640 414,5 | ALM |
| 2.0 FSi 150 16V | 5P12M1 | E | 1984 | BLR,BLY | M | + | TSW | 05/04 ▸ | 1K0121251E | 734335 | 640 414,5 | ALM |
| 2.0 FSi 150 16V | 5P12M1 | E | 1984 | BLR,BLY | M | + | TSW | 05/04 ▸ 11/05 | 1K0121251AR | 735120 | 650 414,5 | ALM |
| 2.0 FSi 150 16V | 5P1/1M1/2M1 ; 5P5 1M1/2M1 | E | 1984 | BLR,BLY,BVY,BVZ | M | | TSW | 05/05 ▸ 03/09 | 1K0121251AR | 735120 | 650 414,5 | ALM |
| 2.0 TFSi,2.0 TFSi 200 2.0 TFSi 200 16V | 5P1/5P1 ; 5P5/2P1 8P1/8P4 | E | 1984 | BWA | M | | Air Seal | 05/06 ▸ | 1K0121251AB | 734333 | 650 454,3 | ALB |
| 2.0 FSi 150 16V | 5P12M3 | E | 1984 | BLR,BLY | A | + | TSW | 05/04 ▸ 11/05 | 1K0121251E | 734335 | 640 414,5 | ALM |
| 2.0 FSi 150 16V | 5P12M3 | E | 1984 | BLR,BLY | A | + | TSW | 06/04 ▸ 11/05 | 1K0121251AR | 735120 | 650 414,5 | ALM |
| 2.0 FSi 150 16V | 5P1/1M3/2M3 ; 5P5 1M3/2M3 | E | 1984 | BLR,BLY,BVY,BVZ | A | | TSW | 05/05 ▸ 03/09 | 1K0121251AR | 735120 | 650 414,5 | ALM |
| 2.0 TFSi 200 16V | 5P15P3 ; 5P52P3 | E | 1984 | BWA | A | | Air Seal | 05/06 ▸ 03/09 | 1K0121251AB | 734333 | 650 454,3 | ALB |
| 1.9 TDi 105 | 5P1/112/121/212 5P5/112/212 | D | 1896 | BJB,BKC,BXE | M | +/- | TSW | 04/04 ▸ 03/09 | 1K0121253AA | 732872 | 650 414,5 | ALM |
| 2.0 TDi 136 16V 2.0 TDi 140 16V | 5P1/231/241 | D | 1968 | AZV,BKD | M | +/- | Air Seal | 03/04 ▸ 03/09 | 1K0121251N | 734333 | 650 454,3 | ALB |
| 2.0 TDi 136 16V 2.0 TDi 140 16V | 5P1/131 ; 5P5/231 241 | D | 1968 | AZV,BKD | M | | Air Seal | 05/05 ▸ 03/09 | 1K0121251N | 734333 | 650 454,3 | ALB |
| 2.0 TDi 170 16V 2.0 TDi PD 170 16V | 5P5864 ; 5P1/261/561 | D | 1968 | BMN | M | | Air Seal | 01/06 ▸ 03/09 | 1K0121251AB | 734333 | 650 454,3 | ALB |
| 2.0 TDi 136 16V 2.0 TDi 140 16V | 5P1/233/243 | D | 1968 | AZV,BKD | A | +/- | Air Seal | 06/04 ▸ 03/09 | 1K0121251N | 734333 | 650 454,3 | ALB |
| 2.0 TDi 136 16V 2.0 TDi 140 16V | 5P1/133/233 ; 5P5 233/243 | D | 1968 | AZV,BKD | A | | Air Seal | 05/05 ▸ 03/09 | 1K0121251N | 734333 | 650 454,3 | ALB |

## AROSA

| | | | | | | | | | | | | |
|---|---|---|---|---|---|---|---|---|---|---|---|---|
| 1.0 i | 6H1/0A4/0B4/0C4/0H4/0H5/0L4/0W4/1B4 | E | 999 | AER,AHT,ALD,ALL,ANV,AUC | M | + | TSW | 02/97 ▸ 06/04 | 1H0121253L | 731267 | 628 377,5 | ALM |
| 1.0 i | 6H1/0A4/0B4/0C4/0H4/0H5/0L4/0W4/1B4 | E | 999 | AER,AHT,ALD,ALL,ANV,AUC | M | - | TSW | 02/97 ▸ 06/04 | 6N0121253K | 730956 | 430 377,5 | ALM |
| 1.4 i,1.4 i 16V | 6H1/0D4/0E4/0F4/0N4 0R4/0S4/0X4/1N4/2N4/3E4 | E | 1390 | AEX,AFK,AKK,AKV,ANW,APQ,AQQ AUB,AUD | M | + | TSW | 02/97 ▸ 06/04 | 1H0121253L | 731267 | 628 377,5 | ALM |
| 1.4 i,1.4 i 16V | 6H1/0D4/0E4/0F4/0N4 0R4/0S4/0X4/1N4/2N4/3E4 | E | 1390 | AEX,AFK,AKK,AKV,ANW,APQ,AQQ AUB,AUD | M | - | TSW | 02/97 ▸ 06/04 | 6N0121253K | 730956 | 430 377,5 | ALM |
| 1.4 i | 6H1/0D3/0F3/0S3/0X3/1N3/2N3 | E | 1390 | AEX,AKK,AKV,ANW,APQ,AUD | A | +/- | TSW | 02/97 ▸ 06/04 | 1H0121253L | 731267 | 628 377,5 | ALM |
| 1.4 i | 6H1/0D3/0F3/0S3/0X3/1N3/2N3 | E | 1390 | AEX,AKK,AKV,ANW,APQ,AUD | A | - | TSW | 02/97 ▸ 06/04 | 6N0121253K | 730956 | 430 377,5 | ALM |
| 1.4 TDi | 6H1/094/194/294 | D | 1422 | AMF | M | - | TSW | 10/99 ▸ 06/04 | 6N0121253K | 730956 | 430 377,5 | ALM |
| 1.4 TDi | 6H1/094/194/294 | D | 1422 | AMF | M | - | TSW | 10/99 ▸ 06/04 | 6N0121253AK | 730954 | 508 377,5 | ALM |
| 1.7 SDi | 6H1/074/0M4/174 | D | 1716 | AKU | M | + | TSW | 08/97 ▸ 10/03 | 1H0121253L | 731267 | 628 377,5 | ALM |

# SEAT (.../...)

## AROSA (.../...)

| | | | CC | | | AC | | | OE | Valeo | DIM. | TECH |
|---|---|---|---|---|---|---|---|---|---|---|---|---|
| 1.7 SDi | 6H1/074/0M4/174 | D | 1716 | AKU | M | - | TSW | 08/97 ▸ 10/03 | 6N0121253K | 730956 | 430 377,5 | ALM |

## CORDOBA (93>96)

| | | | CC | | | AC | | | OE | Valeo | DIM. | TECH |
|---|---|---|---|---|---|---|---|---|---|---|---|---|
| 1.4 i | 6K2/2U2/2U3/2V2/3U2/3U3/3V2 | E | 1390 | AEX | M | + | TSW | 09/95 ▸ 06/96 | 6K0121253AA | 731267 | 628 377,5 | ALM |
| 1.4 i | 6K2/2U2/2U3/2V2/3U2/3U3/3V2 | E | 1390 | AEX | M | - | TSW | 09/95 ▸ 06/96 | 6K0121253K | 730947 | 525 322 | ALM |
| 1.4 i | 6K2/2J1/2J2/2P1/2P2/2R1/2R2/3J1/3J2/3P1/3P2 3R1/3R2 | E | 1391 | ABD | M | + | TSW | 11/93 ▸ 11/95 | 6K0121253AA | 731267 | 628 377,5 | ALM |
| 1.4 i | 6K2/2J1/2J2/2P1/2P2/2R1/2R2/3J1/3J2/3P1/3P2 3R1/3R2 | E | 1391 | ABD | M | + | TSW | 11/93 ▸ 11/95 | 1H0121253A | 731268 | 628 377,5 | ALM |
| 1.4 i | 6K2/2J1/2J2/2P1/2P2/2R1/2R2/3J1/3J2/3P1/3P2 3R1/3R2 | E | 1391 | ABD | M | - | | 11/93 ▸ 11/95 | 6K0121253J | 730946 | 430 322 | ALM |
| 1.4 i | 6K2/2J1/2J2/2P1/2P2/2R1/2R2/3J1/3J2/3P1/3P2/3R2 | E | 1391 | ABD | M | | TSW | 11/93 ▸ 11/95 | 6K0121253C | 730946 | 430 322 | ALM |
| 1.4 i | 6K2/2J1/2J2/2P1/2P2/2R1/2R2/3J1/3J2/3P1/3P2 3R1/3R2 | E | 1391 | ABD | M | | TSW | 11/93 ▸ 11/95 | 6K0121253K | 730947 | 525 322 | ALM |
| 1.6 i | 6K2/2A1/2D1/2S1/3A1/3D1 | E | 1595 | 1F | M | + | TSW | 11/93 ▸ 06/96 | 1H0121253P | 731265 | 628 377,5 | ALM |
| 1.6 i | 6K2/2A1/2D1/2S1/3A1/3D1 | E | 1595 | 1F | M | - | TSW | 11/93 ▸ 06/96 | 6K0121253S | 730948 | 525 322 | ALM |
| 1.6 i | 6K2/2D1/2S1/3A1/3D1 | E | 1595 | 1F | M | | TSW | 11/93 ▸ 06/96 | 6K0121253H | 730948 | 525 322 | ALM |
| 1.6 i | 6K22A1 | E | 1595 | 1F | M | | TSW | 07/94 ▸ 06/96 | 6K0121253K | 730947 | 525 322 | ALM |
| 1.6 i | 6K2/2E1/2E2/3E1/3E2 | E | 1598 | ABU | M | + | TSW | 09/93 ▸ 08/94 | 1H0121253A | 731268 | 628 377,5 | ALM |
| 1.6 i | 6K2/2E1/2E2/3E1/3E2 | E | 1598 | ABU | M | + | TSW | 11/93 ▸ 07/94 | 1H0121253L | 731267 | 628 377,5 | ALM |
| 1.6 i | 6K2/2E1/2E2/3E1/3E2 | E | 1598 | ABU | M | + | TSW | 11/93 ▸ 07/94 | 1HM121253D | 731268 | 628 377,5 | ALM |
| 1.6 i | 6K2/2W1/2W2/3W1/3W2/8W1/8W2 | E | 1598 | AFT | M | + | TSW | 09/95 ▸ 06/96 | 1H0121253P | 731265 | 628 377,5 | ALM |
| 1.6 i | 6K2/2W1/2W2/3W1/3W2/8W1/8W2 | E | 1598 | AFT | M | - | TSW | 09/95 ▸ 06/96 | 6K0121253A | 730945 | 628 322 | ALM |
| 1.6 i | 6K2/2E1/2E2/3E1/3E2 | E | 1598 | ABU | M | | TSW | 09/93 ▸ 08/94 | 6K0121253 | 730947 | 525 322 | ALM |
| 1.8 i,1.8 i 16V | 6K2/2D1/2F1/2M1/2T1 3C1/3F1/3M1/6G1/8C1/8G1 | E | 1781 | ABS,ACC,ADL,ADZ | M | + | TSW | 11/93 ▸ 06/96 | 1H0121253P | 731265 | 628 377,5 | ALM |
| 1.8 i | 6K2/2F1/2M1/3C1/3F1/3M1/8C1 | E | 1781 | ADZ | M | + | TSW | 07/94 ▸ 06/96 | 1H0121253D | 731025 | 628 322 | ALM |
| 1.8 i | 6K2/2D1/2F1/2M1/2T1/3C1/3F1/3M1/8C1 | E | 1781 | ABS,ACC,ADZ | M | - | TSW | 11/93 ▸ 06/96 | 6K0121253S | 730948 | 525 322 | ALM |
| 1.8 i 16V | 6K26G1 | E | 1781 | ADL | M | - | TSW | 03/94 ▸ 06/96 | 6K0121253A | 730945 | 628 322 | ALM |
| 1.8 i | 6K2/2F1/2M1/3C1/3F1/3M1/8C1 | E | 1781 | ADZ | M | - | TSW | 07/94 ▸ 06/96 | 6K0121253G | 731266 | 628 322 | ALM |
| 1.8 i | 6K2/2D1/2F1/2M1/2T1/3F1/3M1 | E | 1781 | ABS,ACC | M | | TSW | 11/93 ▸ 06/96 | 6K0121253H | 730948 | 525 322 | ALM |
| 1.8 i 16V | 6K28G1 | E | 1781 | ADL | M | | TSW | 09/95 ▸ 06/96 | 6K0121253A | 730945 | 628 322 | ALM |
| 1.8 i | 6K2/2F2/2M2/3F2/3M2 | E | 1781 | ABS,ADZ | A | + | TSW | 01/94 ▸ 06/96 | 1H0121253P | 731265 | 628 377,5 | ALM |
| 1.8 i | 6K2/2C2/2F2/2M2/3C2/3F2/3M2 | E | 1781 | ADZ | A | + | TSW | 07/94 ▸ 06/96 | 1H0121253D | 731025 | 628 322 | ALM |
| 1.8 i | 6K2/2C2/2F2/2M2/3C2/3F2/3M2 | E | 1781 | ABS,ADZ | A | - | TSW | 01/94 ▸ 06/96 | 6K0121253G | 731266 | 628 322 | ALM |
| 1.8 i | 6K2/2C2/3C2 | E | 1781 | ADZ | A | | TSW | 09/95 ▸ 06/96 | 1H0121253P | 731265 | 628 377,5 | ALM |
| 2.0 i | 6K2/3H1/5H1/8H1 | E | 1984 | 2E | M | + | TSW | 11/93 ▸ 06/96 | 1H0121253P | 731265 | 628 377,5 | ALM |
| 2.0 i | 6K28L1 | E | 1984 | AGG | M | + | TSW | 04/96 ▸ 06/96 | 1HM121253D | 731268 | 628 377,5 | ALM |
| 2.0 i | 6K2/3H1/5H1/8H1 | E | 1984 | 2E | M | - | TSW | 11/93 ▸ 06/96 | 6K0121253A | 730945 | 628 322 | ALM |
| 2.0 i | 6K28L1 | E | 1984 | AGG | M | - | TSW | 04/96 ▸ 06/96 | 6K0121253AC | 731728 | 628 322 | ALM |
| 1.9 D,1.9 TD | 6K2/2N1/2X1/2X2/3E1 3K1/3Q1/3X1/3Y2/5E1/5K1/5Q1 | D | 1896 | 1Y,AAZ | M | + | TSW | 09/93 ▸ 06/96 | 1H0121253P | 731265 | 628 377,5 | ALM |
| 1.9 SDi | 6K2/2Z2/372/3Z2 | D | 1896 | AEY | M | + | TSW | 09/95 ▸ 06/96 | 6K0121253AA | 731267 | 628 377,5 | ALM |
| 1.9 D | 6K2/2N1/2X1/2X2/3X1/3Y2 | D | 1896 | 1Y | M | - | TSW | 11/93 ▸ 06/96 | 6K0121253G | 731266 | 628 322 | ALM |
| 1.9 SDi | 6K2/2Z2/372/3Z2 | D | 1896 | AEY | M | - | TSW | 09/95 ▸ 06/96 | 6K0121253J | 730946 | 430 322 | ALM |
| 1.9 TD | 6K2/3K1/3Q1/5K1/5Q1 | D | 1896 | AAZ | M | | TSW | 11/93 ▸ 06/96 | 6K0121253M | 731265 | 628 377,5 | ALM |

## CORDOBA (96>99)

| | | | CC | | | AC | | | OE | Valeo | DIM. | TECH |
|---|---|---|---|---|---|---|---|---|---|---|---|---|
| 1.0 i | 6K2/261/361 | E | 999 | AER | M | - | TSW | 06/97 ▸ 04/99 | 6K0121253J | 730946 | 430 322 | ALM |
| 1.0 i | 6K2/261/361 | E | 999 | AER | M | | TSW | 06/97 ▸ 04/99 | 6K0121253R | 730946 | 430 322 | ALM |
| 1.4 i,1.4 i 16V | 6K2/271/2A3/2U2/2U3 2V2/371/3A3/3U2/3U3/3V2 ; 6K5/2A3/2U2/2U3 2V2/3A3/3U2/3U3/3V2 | E | 1390 | AEX,AFH,AKV,ANX,APQ | M | + | TSW | 07/96 ▸ 05/99 | 6K0121253A | 730945 | 628 322 | ALM |
| 1.4 i,1.4 i 16V | 6K2/271/2A3/2U2/2U3 2V2/371/3A3/3U2/3U3/3V2 ; 6K5/2A3/2U2/2U3 2V2/3A3/3U2/3U3/3V2 | E | 1390 | AEX,AFH,AKV,ANX,APQ | M | + | TSW | 07/96 ▸ 05/99 | 6K0121253AA | 731267 | 628 377,5 | ALM |
| 1.4 i,1.4 i 16V | 6K2/271/2A3/2U2/2U3 2V2/371/3A3/3U2/3U3/3V2 ; 6K5/2A3/2U2/2U3 2V2/3A3/3U2/3U3/3V2 | E | 1390 | AEX,AFH,AKV,ANX,APQ | M | - | TSW | 07/96 ▸ 09/98 | 6K0121253K | 730947 | 525 322 | ALM |
| 1.4 i | 6K2/2U3/3U2/3V2 | E | 1390 | APQ | M | - | TSW | 08/98 ▸ 04/99 | 6K0121253AA | 731267 | 628 377,5 | ALM |
| 1.4 i | 6K5/2U3/3U3 | E | 1390 | ANX | M | | TSW | 01/98 ▸ 05/98 | 6K0121253K | 730947 | 525 322 | ALM |
| 1.6 i | 6K2/2D1/2S1/3D1/8D1 | E | 1595 | 1F | M | + | TSW | 07/96 ▸ 04/99 | 6K0121253AA | 731267 | 628 377,5 | ALM |
| 1.6 i | 6K2/2D1/2S1/3D1/8D1 | E | 1595 | 1F | M | + | TSW | 07/96 ▸ 04/99 | 1H0121253P | 731265 | 628 377,5 | ALM |
| 1.6 i | 6K2/2D1/2S1/3D1/8D1 | E | 1595 | 1F | M | - | TSW | 07/96 ▸ 04/99 | 6K0121253M | 731265 | 628 377,5 | ALM |
| 1.6 i | 6K2/2D1/2S1/3D1/8D1 | E | 1595 | 1F | M | - | TSW | 07/96 ▸ 04/99 | 6K0121253S | 730948 | 525 322 | ALM |
| 1.6 i | 6K2/2S1/8D1 | E | 1595 | 1F | M | - | TSW | 08/98 ▸ 04/99 | 1HM121253D | 731268 | 628 377,5 | ALM |
| 6K-X-080 001 ▸ | | | | | | | | | | | | |
| 1.6 i | 6K2/2D4/3D4 ; 6K5/2D4/3D4 | E | 1595 | 1F | A | + | TSW | 05/97 ▸ 05/99 | 1H0121253P | 731265 | 628 377,5 | ALM |
| 1.6 i | 6K5/2D4/3D4 | E | 1595 | 1F | A | + | TSW | 05/97 ▸ 05/99 | 6K0121253AA | 731267 | 628 377,5 | ALM |
| 1.6 i | 6K2/2D4/3D4 ; 6K5/2D4/3D4 | E | 1595 | 1F | A | - | TSW | 05/97 ▸ 08/98 | 6K0121253G | 731266 | 628 322 | ALM |

Radiator Radiateur Motorkühler Radiatore di raffreddamento Radiator Radyatör Radiador Радиатор vízhűtő Vodní chladič Radiator Ψυγείο



• **New** Nouveau **Nuevo** Novo **Nuovo** Nieuw **Neu** Nowość **Yeni** Новый Νέο **Nový**

## CORDOBA (96>99) (.../...)

| Type Ctr. | | CC | | AC | | | OE | Valeo | DIM. | TECH |
|---|---|---|---|---|---|---|---|---|---|---|
| 1.6 i 6K2/2D4/3D4 | E | 1595 | 1F | A | - | TSW | 05/97 ▸ 04/99 | 6K0121253M | 731265 | 628 377,5 | ALM |
| 1.6 i 6K2/2D4/3D4 | E | 1595 | 1F | A | - | TSW | 05/97 ▸ 04/99 | 6K0121253S | 730948 | 525 322 | ALM |
| 1.6 i 6K2/2D4/3D4 ; 6K5/2D4/3D4 | E | 1595 | 1F | A | - | TSW | 06/97 ▸ 05/99 | 6K0121253T | 731264 | 628 322 | ALM |
| 1.6 i 6K2/2D4/3D4<br>6K-X-080 001 ▸ | E | 1595 | 1F | A | - | TSW | 08/98 ▸ 04/99 | 1HM121253D | 731268 | 628 377,5 | ALM |
| 1.6 i 6K2/2W2/3W1/3W2/5W1/5W2/8W1/8W2 ; 6K5/2W1 3W1/3W2 | E | 1598 | AFT | M | + | TSW | 07/96 ▸ 06/97 | 6K0121253K | 730947 | 525 322 | ALM |
| 1.6 i 6K2/2W1/2W2/3W1/5W2/8W2 | E | 1598 | AFT | M | + | TSW | 07/96 ▸ 04/99 | 1H0121253P | 731265 | 628 377,5 | ALM |
| 1.6 i 6K2/2W1/2W2/3W1/3W2/5W1/5W2/8W1/8W2 ; 6K5 2W1/3W1/3W2 | E | 1598 | AFT | M | + | TSW | 07/96 ▸ 05/99 | 6K0121253AS | 732710 | 628 377,5 | ALM |
| 1.6 i 6K2/251/2F1/2W1/2W2/351/3W1/3W2/5W1/5W2/851 8F1/8W1/8W2 ; 6K5/2F1/2W1/351/3F1/3W1/3W2<br>6K-V-191 853, 6K-V-191853 ▸ | E | 1598 | AEE,AFT,ALM | M | + | TSW | 05/97 ▸ 05/99 | 6K0121253AA | 731267 | 628 377,5 | ALM |
| 1.6 i 6K2/251/2F1/2W1/2W2/351/3F1/3W1/3W2/5W1/5W2 851/8F1/8W1/8W2 ; 6K5/251/2F1/2W1/351/3F1 3W1/3W2 | E | 1598 | AEE,AFT,ALM | M | + | TSW | 05/97 ▸ 05/99 | 6K0121253A | 730945 | 628 322 | ALM |
| 1.6 i 6K2/2W1/2W2/3W1/3W2/5W1/5W2/8W1/8W2 | E | 1598 | AFT | M | - | TSW | 07/96 ▸ 04/99 | 6K0121253M | 731265 | 628 377,5 | ALM |
| 1.6 i 6K2/2W2/3W2/5W1/8W1 ; 6K5/2W1/3W1/3W2 | E | 1598 | AFT | M | - | TSW | 07/96 ▸ 05/99 | 1H0121253P | 731265 | 628 377,5 | ALM |
| 1.6 i 6K52W1 ; 6K2/3W1/3W2/5W1/8W2 | E | 1598 | AFT | M | - | TSW | 07/96 ▸ 06/97 | 6K0121253A | 730945 | 628 322 | ALM |
| 1.6 i 6K2/251/2F1/351/3F1/851/8F1 ; 6K5/251/2F1 351/3F1 | E | 1598 | AEE,ALM | M | - | TSW | 05/97 ▸ 09/98 | 6K0121253K | 730947 | 525 322 | ALM |
| 1.6 i 6K2/2W1/2W2/3W1/3W2/5W1/5W2/8W1/8W2 ; 6K5 2W1/3W1/3W2 | E | 1598 | AFT | M | - | TSW | 06/97 ▸ 05/99 | 6K0121253AD | 732317 | 525 322 | ALM |
| 1.6 i 6K23F1 ; 6K5251 | E | 1598 | AEE,ALM | M | - | TSW | 09/98 ▸ 04/99 | 6K0121253AA | 731267 | 628 377,5 | ALM |
| 1.6 i 6K2/2W2/5W2/8W1 ; 6K5/3W1/3W2 | E | 1598 | AFT | M | | TSW | 07/96 ▸ 06/97 | 6K0121253A | 730945 | 628 322 | ALM |
| 1.6 i 6K2/3W1/3W2/5W1/5W2/8W1/8W2<br>▸ 6K0-121-253Q, 6K-V-191852 | E | 1598 | AFT | M | - | | 07/96 ▸ 06/97 | 6K0121253Q | | 628 322 | ALM |
| 1.8 i 6K52T1 ; 6K2/2M1/2T1 | E | 1781 | ACC,ADZ | M | + | TSW | 07/96 ▸ 05/99 | 1H0121253P | 731265 | 628 377,5 | ALM |
| 1.8 i 6K52T1 ; 6K2/2M1/2T1/3M1 | E | 1781 | ACC,ADZ | M | + | TSW | 07/96 ▸ 05/99 | 6K0121253AA | 731267 | 628 377,5 | ALM |
| 1.8 i 6K2/2M1/3M1 | E | 1781 | ADZ | M | + | TSW | 07/96 ▸ 04/99 | 1H0121253D | 731025 | 628 322 | ALM |
| 1.8 i 6K22T1 | E | 1781 | ACC | M | + | TSW | 07/96 ▸ 04/99 | 6K0121253K | 730947 | 525 322 | ALM |
| 1.8 i 6K2/2M1/2T1/3M1 | E | 1781 | ACC,ADZ | M | - | TSW | 07/96 ▸ 04/99 | 6K0121253M | 731265 | 628 377,5 | ALM |
| 1.8 i 6K52T1 ; 6K2/2M1/2T1/3M1 | E | 1781 | ACC,ADZ | M | - | TSW | 07/96 ▸ 05/99 | 6K0121253S | 730948 | 525 322 | ALM |
| 1.8 i 6K2/2C2/2M2/3C2/3M2 | E | 1781 | ADZ | A | + | TSW | 07/96 ▸ 04/99 | 1H0121253D | 731025 | 628 322 | ALM |
| 1.8 i 6K2/2C2/2M2/3C2/3M2<br>6K-X-080001 ▸ | E | 1781 | ADZ | A | + | TSW | 08/98 ▸ 04/99 | 6K0121253AA | 731267 | 628 377,5 | ALM |
| 1.8 i 6K2/2C2/2M2/3C2/3M2 | E | 1781 | ADZ | A | + | TSW | 09/98 ▸ 04/99 | 1HM121253D | 731268 | 628 377,5 | ALM |
| 1.8 i 6K2/2C2/2M2/3C2/3M2 | E | 1781 | ADZ | A | - | TSW | 07/96 ▸ 04/99 | 6K0121253N | 731266 | 628 322 | ALM |
| 1.8 i 6K2/2C2/2M2/3C2/3M2 | E | 1781 | ADZ | A | - | TSW | 07/96 ▸ 04/99 | 6K0121253M | 731265 | 628 377,5 | ALM |
| 1.8 i 6K2/2C2/2M2/3C2/3M2 | E | 1781 | ADZ | A | - | TSW | 07/96 ▸ 09/98 | 1H0121253P | 731265 | 628 377,5 | ALM |
| 1.8 i 6K2/2C2/2M2/3C2/3M2<br>6K-X-080 001 ▸ | E | 1781 | ADZ | A | - | TSW | 08/98 ▸ 04/99 | 6K0121253T | 731264 | 628 322 | ALM |
| 1.8 i 6K23M1<br>▸ 6K-X-080 000 | E | 1781 | ADZ | M | - | TSW | 07/96 ▸ 06/98 | 1H0121253P | 731265 | 628 377,5 | ALM |
| 1.8 i 6K2/2M1/3M1<br>▸ 6K-X-080000 | E | 1781 | ADZ | M | - | TSW | 07/96 ▸ 08/98 | 6K0121253G | 731266 | 628 322 | ALM |
| 2.0 i 16V 6K2811 | E | 1984 | ABF | M | + | TSW | 07/96 ▸ 04/99 | 1HM121253D | 731268 | 628 377,5 | ALM |
| 2.0 i,2.0 i 16V 6K2/2L1/5L1/611/811 8L1 | E | 1984 | ABF,AGG | M | + | TSW | 07/96 ▸ 04/99 | 6K0121253AA | 731267 | 628 377,5 | ALM |
| 2.0 i,2.0 i 16V 6K2/2L1/5L1/611/811 8L1 | E | 1984 | ABF,AGG | M | - | TSW | 07/96 ▸ 04/99 | 6K0121253AC | 731728 | 628 322 | ALM |
| 2.0 i,2.0 i 16V 6K2/2L1/5L1/611/811 8L1 | E | 1984 | ABF,AGG | M | - | TSW | 07/96 ▸ 04/99 | 6K0121253M | 731265 | 628 377,5 | ALM |
| 2.0 i 16V 6K2611 | E | 1984 | ABF | M | - | TSW | 07/96 ▸ 04/99 | 1HM121253D | 731268 | 628 377,5 | ALM |
| 2.0 i 16V 6K2/611/811 | E | 1984 | ABF | M | - | TSW | 07/96 ▸ 04/99 | 1H0121253P | 731265 | 628 377,5 | ALM |
| 1.9 SDi 6K5/2Z2/3Z2 | D | 1896 | AEY | M | +/- | TSW | 06/97 ▸ 05/99 | 1H0121253P | 731265 | 628 377,5 | ALM |
| 1.9 D,1.9 SDi,1.9 TD 6K2/2N2/2Y2/2Z2/3E1<br>1.9 TDi 3N2/3Y2/3Z2/581/5E1 5N2/881/8N2 ; 6K5/2N2/2Z2/3N2/3Z2/581 | D | 1896 | 1Y,1Z,AAZ,AEY,AFN,AHU | M | + | TSW | 07/96 ▸ 05/99 | 6K0121253AA | 731267 | 628 377,5 | ALM |
| 1.9 D 6K2/2Y2/3Y2 | D | 1896 | 1Y | M | + | TSW | 07/96 ▸ 04/99 | 6K0121253K | 730947 | 525 322 | ALM |
| 1.9 SDi,1.9 TDi 6K2/2N2/2Z2/3N2/3Z2 5N2/8N2 ; 6K5/2N2/2Z2/3N2/3Z2 | D | 1896 | 1Z,AEY,AHU | M | + | TSW | 07/96 ▸ 05/99 | 6K0121253A | 730945 | 628 322 | ALM |
| 1.9 TD 6K2/3E1/5E1 | D | 1896 | AAZ | M | + | TSW | 07/96 ▸ 08/97 | 1H0121253P | 731265 | 628 377,5 | ALM |
| 1.9 TDi 6K2/2N2/3N2/581/5N2 881/8N2 ; 6K5/2N2/3N2 | D | 1896 | 1Z,AFN,AHU | M | - | TSW | 07/96 ▸ 05/99 | 6K0121253AC | 731728 | 628 322 | ALM |
| 1.9 D,1.9 SDi,1.9 TD 6K2/2N2/2Y2/2Z2/3E1<br>1.9 TDi 3N2/3Y2/3Z2/581/5E1 5N2/881/8N2 | D | 1896 | 1Y,1Z,AAZ,AEY,AFN,AHU | M | - | TSW | 07/96 ▸ 04/99 | 6K0121253M | 731265 | 628 377,5 | ALM |
| 1.9 D,1.9 SDi,1.9 TDi 6K2/2Y2/2Z2/3N2/3Y2 3Z2/5N2/8N2 | D | 1896 | 1Y,1Z,AEY | M | - | TSW | 07/96 ▸ 04/99 | 1H0121253P | 731265 | 628 377,5 | ALM |

# SEAT (.../...)

## CORDOBA (96>99) (.../...)

| | | | CC | | | AC | | | OE | Valeo | DIM. | | TECH |
|---|---|---|---|---|---|---|---|---|---|---|---|---|---|
| 1.9 SDi | 6K2/2Z2/3Z2 ; 6K5 2Z2/3Z2 | D | 1896 | AEY | M | - | TSW | 07/96 ▸ 05/99 | 6K0121253J | 730946 | 430 | 322 | ALM |
| 1.9 SDi,1.9 TDi | 6K2/2Z2/3Z2/581/881 6K5/2Z2/3Z2 | D | 1896 | AEY,AFN | M | - | TSW | 07/96 ▸ 05/99 | 6K0121253R | 730946 | 430 | 322 | ALM |
| 1.9 SDi,1.9 TDi | 6K2/2Z2/3Z2/581/881 | D | 1896 | AEY,AFN | M | - | TSW | 07/96 ▸ 04/99 | 6K0121253C | 730946 | 430 | 322 | ALM |
| 1.9 D | 6K2/2Y2/3Y2 | D | 1896 | 1Y | M | - | TSW | 07/96 ▸ 06/97 | 6K0121253G | 731266 | 628 | 322 | ALM |
| 1.9 D | 6K2/2Y2/3Y2 | D | 1896 | 1Y | M | - | TSW | 06/97 ▸ 04/99 | 6K0121253T | 731264 | 628 | 322 | ALM |
| 1.9 D | 6K2/2Y2/3Y2 6K-X-080 001 ▸ | D | 1896 | 1Y | M | - | TSW | 08/98 ▸ 04/99 | 1HM121253D | 731268 | 628 | 377,5 | ALM |
| 1.9 TDi | 6K2/3N2/5N2/8N2 | D | 1896 | 1Z | M | | TSW | 07/96 ▸ 12/96 | 6K0121253G | 731266 | 628 | 322 | ALM |
| 1.9 SDi | 6K2/2Z2/3Z2 | D | 1896 | AEY | M | | TSW | 07/96 ▸ 04/99 | 6K0121253R | 730946 | 430 | 322 | ALM |
| 1.9 TDi | 6K5581 | D | 1896 | AFN | M | | TSW | 02/98 ▸ 05/99 | 6K0121253AC | 731728 | 628 | 322 | ALM |

## CORDOBA (99>2002)

| | | | | | | | | | | | | | |
|---|---|---|---|---|---|---|---|---|---|---|---|---|---|
| 1.0 i,1.0 i 16V | 6K2/2A6/2B6/2Q6/2V6 2Y6/3A6/3B6/3V6/3Y6 | E | 999 | ALD,ANV,AST,AUC,AVZ | M | + | TSW | 08/99 ▸ 08/02 | 6K0121253AG | 732698 | 647 | 377 | ALM |
| 1.4 i,1.4 i 16V | 6K2/2C6/2D6/2E6/2R6 2U6/3C6/3D6/3E6/3R6/3U6/5R6/8E6 ; 6K5/2C6 2D6/2E6/2R6/2U6/3C6/3D6/3E6/3R6/3U6 | E | 1390 | AKK,ANW,APE,AQQ,AUB,AUD | M | + | TSW | 05/99 ▸ 08/02 | 6K0121253AG | 732698 | 647 | 377 | ALM |
| 1.6 i | 6K2/2H6/3H6/5H6/8H6 ; 6K5/2H6/2S6/2T6/3H6 3T6/5H6/5T6 | E | 1595 | AKL,APF,AUR | M | +/- | TSW | 05/99 ▸ 08/02 | 6K0121253AG | 732698 | 647 | 377 | ALM |
| 1.6 i | 6K2/2H6/3H6/5H6 ; 6K5/2H6/3H6/5H6 | E | 1595 | AUR | M | +/- | | 07/00 ▸ 08/02 | 6K0121253AE | | 647 | 377 | ALM |
| 1.6 i | 6K2/2S6/2T6/3T6/5T6/8T6 | E | 1595 | AKL | M | + | TSW | 06/99 ▸ 08/02 | 6K0121253AG | 732698 | 647 | 377 | ALM |
| 1.6 i | 6K2/2G8/3G8 ; 6K5/2G8/2S7/3G8 | E | 1595 | AEH,AKL | A | +/- | TSW | 05/99 ▸ 08/02 | 6K0121253AG | 732698 | 647 | 377 | ALM |
| 1.6 i | 6K22S7 ; 6K52S7 | E | 1595 | AKL | A | + | | 02/00 ▸ 08/02 | 6K0121253AE | | 647 | 377 | ALM |
| 1.6 i | 6K22S7 | E | 1595 | AKL | A | + | TSW | 02/00 ▸ 08/02 | 6K0121253AG | 732698 | 647 | 377 | ALM |
| 1.6 i | 6K52F1 | E | 1598 | ALM | M | +/- | TSW | 08/99 ▸ 08/02 | 6K0121253AG | 732698 | 647 | 377 | ALM |
| 1.6 i | 6K53F1 ; 6K2/2F1/3F1/8F1 | E | 1598 | ALM | M | + | TSW | 05/99 ▸ 08/02 | 6K0121253AG | 732698 | 647 | 377 | ALM |
| 1.8 i Turbo 20V | 6K2/6J6/9J6 | E | 1781 | AQX,AYP | M | + | | 12/99 ▸ 08/02 | 6K0121253AE | | 647 | 377 | ALM |
| 1.8 i Turbo 20V | 6K26J6 | E | 1781 | AYP | M | - | TSW | 09/00 ▸ 08/02 | 6K0121253AG | 732698 | 647 | 377 | ALM |
| 1.9 SDi,1.9 TDi | 6K2/2K6/2L6/2M6/2N6 3K6/3L6/3M6/3N6/3X6/5L6/5N6/5X6/8L6/8N6/9X6 6K5/2K6/2L6/2M6/2N6/3K6/3L6/3M6/3N6/3X6/5L6 5N6/5X6 | D | 1896 | AGP,AGR,ALH,AQM,ASV | M | +/- | TSW | 03/99 ▸ 08/02 | 6K0121253AG | 732698 | 647 | 377 | ALM |

## CORDOBA (2002>)

| | | | | | | | | | | | | | |
|---|---|---|---|---|---|---|---|---|---|---|---|---|---|
| 1.2 i 12V | 6L2/2D4/3D4 | E | 1198 | AZQ,BME | M | +/- | TSW | 10/02 ▸ 06/06 | 6K0121253A | 730945 | 628 | 322 | ALM |
| 1.2 i 12V | 6L2/2A4/2D4/3A4/3D4 | E | 1198 | AZQ,BME,BXV | M | +/- | TSW | 10/02 ▸ 11/09 | 6Q0121253Q | 732862 | 632 | 414,5 | ALM |
| 1.2 i 12V | 6L2/2A4/2D4/3A4/3D4 | E | 1198 | AZQ,BME,BXV | M | +/- | TSW | 10/02 ▸ 11/09 | 6Q0121253R | 732864 | 632 | 414,5 | ALM |
| 1.2 i 12V | 6L2/2D4/3D4 | E | 1198 | AZQ | M | - | TSW | 10/02 ▸ 04/04 | 6N0121253K | 730956 | 430 | 377,5 | ALM |
| 1.2 i 12V | 6L2/2D4/3D4 | E | 1198 | AZQ | M | - | TSW | 10/02 ▸ 04/04 | 6Q0121253K | 732863 | 430 | 414,5 | ALM |
| 1.4 i 16V | 6L2/2E4/2G4/2H4/3E4 3G4/3H4/5E4/5G4/5H4 | E | 1390 | BBY,BBZ,BKY,BXW | M | +/- | TSW | 09/02 ▸ 11/09 | 6Q0121253R | 732864 | 632 | 414,5 | ALM |
| 1.4 i 16V | 6L2/2E4/2G4/2H4/3E4 3G4/3H4/5E4/5G4/5H4 | E | 1390 | BBY,BBZ,BKY,BXW | M | + | TSW | 09/02 ▸ 11/09 | 6Q0121253Q | 732862 | 632 | 414,5 | ALM |
| 1.4 i 16V | 6L2/2G4/3G4/5G4 | E | 1390 | BBY | M | + | TSW | 09/02 ▸ 04/04 | 6K0121253A | 730945 | 628 | 322 | ALM |
| 1.4 i 16V | 6L2/2E4/2G4/3E4/3G4 5E4/5G4 | E | 1390 | BBY,BXW | M | - | TSW | 09/02 ▸ 11/09 | 6Q0121253K | 732863 | 430 | 414,5 | ALM |
| 1.4 i 16V | 6L2/2G4/3G4/5G4 | E | 1390 | BBY | M | - | TSW | 09/02 ▸ 04/04 | 6N0121253K | 730956 | 430 | 377,5 | ALM |
| 1.4 i 16V | 6L2/2E4/2G4/2H4/3E4 3H4/5E4/5H4 | E | 1390 | BBZ,BKY,BXW | M | - | TSW | 10/02 ▸ 11/09 | 6Q0121253AE | 732864 | 632 | 414,5 | ALM |
| 1.4 i 16V | 6L2/2G4/3G4/5G4 | E | 1390 | BBY,BKY | M | | TSW | 09/02 ▸ 06/06 | 6Q0121253AE | 732864 | 632 | 414,5 | ALM |
| 1.4 i 16V | 6L2/2G4/2H4/3G4/3H4 5G4/5H4 | E | 1390 | BBY,BBZ | M | | TSW | 09/02 ▸ | 6Q0121253J | 732863 | 430 | 414,5 | ALM |
| 1.4 i 16V | 6L2/2G3/2G4/3G3/5G4 | E | 1390 | BBY,BKY | A | +/- | TSW | 10/02 ▸ 12/07 | 6Q0121253R | 732864 | 632 | 414,5 | ALM |
| 1.4 i 16V | 6L2/2G3/2G4/3G3/5G4 | E | 1390 | BKY | A | | TSW | 05/04 ▸ 12/07 | 6Q0121253AE | 732864 | 632 | 414,5 | ALM |
| 1.6 i | 6L2/2C4/2K4/3C4/3K4/5C4 | E | 1598 | BAH,BTS | M | +/- | TSW | 04/03 ▸ 11/09 | 6Q0121253R | 732864 | 632 | 414,5 | ALM |
| 1.6 i | 6L2/2C4/2K4/3C4/3K4/5C4 | E | 1598 | BAH,BTS | M | + | TSW | 04/03 ▸ 11/09 | 6Q0121253Q | 732862 | 632 | 414,5 | ALM |
| 1.6 i | 6L2/2K4/3K4 | E | 1598 | BAH | M | + | TSW | 04/03 ▸ 11/09 | 6K0121253A | 730945 | 628 | 322 | ALM |
| 1.6 i | 6L2/2C4/3C4/5C4 | E | 1598 | BTS | M | - | TSW | 11/06 ▸ 11/09 | 6Q0121253AE | 732864 | 632 | 414,5 | ALM |
| 1.6 i | 6L2/2K4/3K4 | E | 1598 | BAH | M | | TSW | 04/03 ▸ 11/09 | 6Q0121253AE | 732864 | 632 | 414,5 | ALM |
| 2.0 i | 6L2/2L4/2T4/3L4/3T4/5L4/5T4 | E | 1984 | AZL,BBX | M | +/- | TSW | 09/02 ▸ 11/09 | 6Q0121253R | 732864 | 632 | 414,5 | ALM |
| 1.4 TDi | 6L2/204/254/264/274 304/354/364/374/504/554/564/574 | D | 1422 | AMF,BMS,BNM,BNV | M | +/- | TSW | 10/02 ▸ 11/09 | 6Q0121253R | 732864 | 632 | 414,5 | ALM |
| 1.9 SDi,1.9 TDi | 6L2/214/224/314/324 336/384/536 | D | 1896 | ASY,ASZ,ATD,AXR,BLT,BMT | M | +/- | TSW | 09/02 ▸ 07/09 | 6Q0121253R | 732864 | 632 | 414,5 | ALM |
| 1.9 SDi | 6L2/214/314 | D | 1896 | ASY | M | +/- | TSW | 09/02 ▸ 12/05 | 6Q0121253Q | 732862 | 632 | 414,5 | ALM |
| 1.9 SDi | 6L2/214/314 | D | 1896 | ASY | M | +/- | TSW | 09/02 ▸ 12/05 | 6K0121253A | 730945 | 628 | 322 | ALM |
| 1.9 TDi | 6L2/224/284/324/524 584 | D | 1896 | ATD,AXR,BMT | M | + | TSW | 09/02 ▸ 11/09 | 6Q0121253R | 732864 | 632 | 414,5 | ALM |

Radiator Radiateur Motorkühler Radiatore di raffreddamento Radiator Radyatör Радиатор Radiador vízhűtő Vodní chladič Radiator Ψυγείο



• **New** Nouveau **Nuevo** Novo **Nuovo** Nieuw **Neu** Nowość **Yeni** Новый Νέο **Nový**

| Type Ctr. | | CC | | AC | | | OE | Valeo | DIM. | TECH |
|---|---|---|---|---|---|---|---|---|---|---|

# SEAT (.../...)

## CORDOBA (2002>) (.../...)

| | | | | | | | | | | | | |
|---|---|---|---|---|---|---|---|---|---|---|---|---|
| 1.9 TDi | 6L2/336/536 | D | 1896 | BLT | M | + | TSW | 05/05 ▸ 05/06 | 6K0121253A | **730945** | 628 322 | ALM |
| 1.9 TDi | 6L2/336/536 | D | 1896 | BLT | M | + | TSW | 05/05 ▸ 05/06 | 6Q0121253Q | **732862** | 632 414,5 | ALM |
| 1.9 TDi | 6L2/336/536 | D | 1896 | ASZ | M | - | TSW | 10/02 ▸ 09/05 | 6Q0121253AD | **732864** | 632 414,5 | ALM |
| 1.9 TDi | 6L2/284/384/584 | D | 1896 | BMT | M | - | TSW | 09/06 ▸ 11/09 | 6Q0121253Q | **732862** | 632 414,5 | ALM |
| 1.9 TDi | 6L2/224/324/336/524 536 | D | 1896 | ASZ,ATD,AXR | M | | TSW | 09/02 ▸ 06/06 | 6Q0121253Q | **732862** | 632 414,5 | ALM |
| 1.9 TDi | 6L2/224/324/524 | D | 1896 | ATD,AXR | M | | TSW | 09/02 ▸ 06/06 | 6K0121253A | **730945** | 628 322 | ALM |

## EXEO

| | | | | | | | | | | | | |
|---|---|---|---|---|---|---|---|---|---|---|---|---|
| 1.6 i | 3R21D1 | E | 1595 | ALZ | M | +/- | TSW | 03/09 ▸ 09/10 | 8E0121251A | **732963** | 632 414 | ALM |
| 1.6 i | 3R2/1D1/2D1 ; 3R5/1D1/2D1/2N1 | E | 1595 | ALZ | M | | TSW | 03/09 ▸ | 8E0121251A | **732963** | 632 414 | ALM |
| 1.8 i Turbo 20V | 3R2/151/1T1/251 | E | 1781 | CFMA | M | +/- | TSW | 12/08 ▸ | 8E0121251A | **732963** | 632 414 | ALM |
| 1.8 i Turbo 20V | 3R2/151/1T1/251/451 3R5/151/251/451 | E | 1781 | CFMA | M | | TSW | 12/08 ▸ | 8E0121251A | **732963** | 632 414 | ALM |
| 2.0 TFSi 16V | 3R24P1 | E | 1984 | BWE | M | +/- | TSW | 03/09 ▸ 05/10 | 8E0121251A | **732963** | 632 414 | ALM |
| 2.0 TDI 16V | 3R2/1N1/2N1/2Q1/4N1 4Q1 | D | 1968 | CAGA/F,CAHA/F | M | +/- | TSW | 12/08 ▸ | 8E0121251A | **732963** | 632 414 | ALM |
| 2.0 TDI 16V | 3R2/2T1 ; 3R5/1N1 1T1/2Q1/2T1/4N1/4Q1 | D | 1968 | CAGA/F,CAGC/F,CAHA/F | M | | TSW | 06/09 ▸ | 8E0121251A | **732963** | 632 414 | ALM |

## IBIZA (84>93)

| | | | | | | | | | | | | |
|---|---|---|---|---|---|---|---|---|---|---|---|---|
| 900 | YL04 ; YN05 ; YU01 ; YG0/1 | E | 903 | 100GL.000,146A.000 | M | - | | 08/84 ▸ 02/93 | SE021117002C | **883921** | 344 322 | ALM |
| 900 | | E | 903 | 146A.000 | M | - | | 08/84 ▸ 01/91 | SE021117002C | **883921** | 344 322 | ALM |
| 1200,1200 i | YG0/1/2/5/6/7/8/9 YG1/6/8 ; YG43 ; YG2/0/1/2 ; YL18 ; YG9/0 1 ; YL37 ; YL63 ; YL2/7/8 ; YN1/5/6/7 ; YN2 6/8 ; YN41 ; YN3/2/6/9 ; YN5/1/3 ; YN6/7/9 YU44 ; YU1/2/3/4 ; YW10 ; YW0/1/2 ; YY40 YY0/3/5 | E | 1193 | 021A-1000,021C-1000 | M | - | | 08/84 ▸ 02/93 | SE021117002A | **883958** | 600 322 | ALM |
| 1500 | YG3/0/2/7 ; YL69 ; YN29 ; YG9/2/4 ; YN71 YU38 ; YU45 ; YY12 ; YN4/6/8 | E | 1461 | 021C-2000 | M | + | | 02/91 ▸ 02/93 | SE021117002D | **730542** | 601 322 | ALM |
| 1500 | YG2/4/5/6/7 ; YG50 ; YG3/0/2/7 ; YG6/1/2 YL69 ; YG9/2/4/6 ; YN2/4/9 ; YN4/3/4/6/8 YN5/0/5 ; YN6/0/2 ; YN7/1/8 ; YU45 ; YU3/5 8 ; YY1/0/2 | E | 1461 | 021A-2000,021C-2000 | M | - | | 08/84 ▸ 02/93 | SE021117002A | **883958** | 600 322 | ALM |
| 1500,1500 i | YG2/3 ; YG60 ; YG5/1 5/6/7/8/9 ; YG80 ; YG7/0/2/3 ; YL85 ; YN34 YN59 ; YG9/5/8 ; YN6/1/3/4/5/6/8 ; YN7/0/2 7/9 ; YU5/0/2/4 | E | 1461 | 021A-2000,021C-2000 | M | - | | 02/87 ▸ 02/93 | SE021117002D | **730542** | 601 322 | ALM |
| 1700 i | YG7/6 ; YG8/3/4/6 YU76 ; YN5/2/7 | E | 1675 | 021C-3000 | M | - | | 02/91 ▸ 02/93 | SE021117002D | **730542** | 601 322 | ALM |
| 1700 D | YR1/1 ; YR3/0/5 YS30 ; YS1/0/1/5/6/7/8 ; YX05 ; YV1/0/2/3 YX1/0/1/2/6/7 | D | 1714 | 022A-5000 | M | - | | 08/84 ▸ 02/93 | SE021117002B | **730542** | 601 322 | ALM |

## IBIZA (93>99)

| | | | | | | | | | | | | |
|---|---|---|---|---|---|---|---|---|---|---|---|---|
| 1.0 i | 6K1/161/261/361 | E | 999 | AER | M | +/- | TSW | 09/96 ▸ 06/99 | 6K0121253J | **730946** | 430 322 | ALM |
| 1.0 i | 6K1/161/261/361 | E | 999 | AER | M | | TSW | 09/96 ▸ 06/99 | 6K0121253R | **730946** | 430 322 | ALM |
| 1.05,1.05 i | 6K1/1B1/1B2/1B3/2B3 3B3 | E | 1043 | AAU | M | + | TSW | 02/93 ▸ 06/96 | 1H0121253A | **731268** | 628 377,5 | ALM |
| 1.05,1.05 i | 6K1/1B1/1B2/1B3/2B3 3B3 | E | 1043 | AAU | M | + | TSW | 02/93 ▸ 06/96 | 1H0121253L | **731267** | 628 377,5 | ALM |
| 1.05,1.05 i | 6K1/1B1/1B2/1B3/2B3 3B3 | E | 1043 | AAU | M | - | TSW | 02/93 ▸ 06/96 | 6K0121253J | **730946** | 430 322 | ALM |
| 1.05,1.05 i | 6K1/1B1/1B2/1B3/2B3 3B3 | E | 1043 | AAU | M | | TSW | 02/93 ▸ 06/96 | 6K0121253C | **730946** | 430 322 | ALM |
| 1.3 i | 6K12L2 | E | 1272 | 2G | M | +/- | TSW | 03/93 ▸ 06/94 | 6K0121253J | **730946** | 430 322 | ALM |
| 1.3 i | 6K1/1C1/1C2/1L1/1L2/2C1/2C2/2L2/3C1/3C2/3L2 | E | 1272 | 2G,AAV | M | + | TSW | 02/93 ▸ 07/94 | 1H0121253A | **731268** | 628 377,5 | ALM |
| 1.3 i | 6K1/1C1/1C2/1L1/1L2/2C1/2C2/2L2/3C1/3C2/3L2 | E | 1272 | 2G,AAV | M | + | TSW | 02/93 ▸ 07/94 | 1H0121253L | **731267** | 628 377,5 | ALM |
| 1.3 i | 6K1/1C1/1C2/1L1/1L2/2C1/2C2/3C1/3C2/3L2 | E | 1272 | 2G,AAV | M | - | TSW | 02/93 ▸ 07/94 | 6K0121253J | **730946** | 430 322 | ALM |
| 1.3 i | 6K1/1C1/1C2/1L1/1L2/2C1/2C2/2L2/3C1/3C2/3L2 | E | 1272 | 2G,AAV | M | | TSW | 02/93 ▸ 07/94 | 6K0121253C | **730946** | 430 322 | ALM |
| 1.4 i,1.4 i 16V | 6K1/1A3/1U2/1U3/1V2 271/2U2/2U3/2V2/371/3U2/3U3/3V2 | E | 1390 | AEX,AFH,AKV,ANX,APQ | M | + | TSW | 07/95 ▸ 06/99 | 6K0121253AA | **731267** | 628 377,5 | ALM |
| 1.4 i,1.4 i 16V | 6K1/1A3/1U2/1U3/1V2 271/2A3/2U2/2U3/2V2/371/3A3/3U2/3U3/3V2/571 | E | 1390 | AEX,AFH,AKV,ANX,APQ | M | + | TSW | 07/95 ▸ 06/99 | 6K0121253A | **730945** | 628 322 | ALM |
| 1.4 i | 6K1/1U2/1U3/1V2/2U2/2U3/2V2/3U2/3U3/3V2 | E | 1390 | AEX | M | + | TSW | 07/95 ▸ 06/96 | 1H0121253L | **731267** | 628 377,5 | ALM |
| 1.4 i | 6K1/1U2/1U3/1V2/2U2/2U3/2V2/3U2/3U3/3V2 | E | 1390 | AEX | M | + | TSW | 07/95 ▸ 06/96 | 1HM121253D | **731268** | 628 377,5 | ALM |
| 1.4 i | 6K1/1A3/1U2/1U3/1V2/2A3/2U2/2U3/2V2/3A3 | E | 1390 | AKV,APQ | M | + | TSW | 09/97 ▸ 08/98 | 6K0121253K | **730947** | 525 322 | ALM |
| 1.4 i,1.4 i 16V | 6K1/1U2/1U3/1V2/271 2U2/2U3/2V2/371/3U2/3U3/3V2/571 | E | 1390 | AEX,AFH,ANX | M | - | TSW | 07/96 ▸ 08/98 | 6K0121253K | **730947** | 525 322 | ALM |

# SEAT (.../...)

## IBIZA (93>99) (.../...)

| | | | CC | | | AC | | | OE | Valeo | DIM. | TECH |
|---|---|---|---|---|---|---|---|---|---|---|---|---|
| 1.4 i,1.4 i 16V | 6K1/2A3/3A3/571 | E | 1390 | AFH,AKV | M | - | TSW | 08/98 ▸ 06/99 | 6K0121253AA | 731267 | 628 377,5 | ALM |
| 1.4 i | 6K1/1U2/1U3/1V2/2U2/2U3/2V2/3U2/3U3/3V2 | E | 1390 | AEX | M | | TSW | 07/95 ▸ 06/96 | 6K0121253K | 730947 | 525 322 | ALM |
| 1.4 i | 6K1/1J1/1J2/1P1/1P2/1R1/1R2/2J1/2J2/2P1/2P2 2R1/2R2/3J2/3P1/3P2/3R1/3R2 | E | 1391 | ABD | M | + | TSW | 09/93 ▸ 06/96 | 6K0121253AA | 731267 | 628 377,5 | ALM |
| 1.4 i | 6K1/1J1/1J2/1P1/1P2/1R1/1R2/2J1/2J2/2P1/2P2 2R1/2R2/3J2/3P1/3P2/3R1/3R2 | E | 1391 | ABD | M | + | TSW | 09/93 ▸ 06/96 | 1HM121253D | 731268 | 628 377,5 | ALM |
| 1.4 i | 6K1/1J1/1J2/1P1/1P2/1R1/1R2/2J1/2J2/2P1/2P2 2R1/2R2/3J2/3P1/3P2/3R1/3R2 | E | 1391 | ABD | M | - | TSW | 09/93 ▸ 06/96 | 6K0121253K | 730947 | 525 322 | ALM |
| 1.4 i | 6K1/1J1/1J2/1P1/1P2/1R1/1R2/2J1/2J2/2P1/2P2 2R1/2R2/3J2/3P1/3P2/3R1/3R2 | E | 1391 | ABD | M | - | TSW | 09/93 ▸ 06/96 | 6K0121253J | 730946 | 430 322 | ALM |
| 1.4 i | 6K1/1J1/1J2/1P1/1P2/1R1/1R2/2J1/2J2/2P1/2P2 2R1/2R2/3J2/3P1/3P2/3R1/3R2 | E | 1391 | ABD | M | | TSW | 09/93 ▸ 06/96 | 6K0121253C | 730946 | 430 322 | ALM |
| 1.6 i | 6K1/2D1/3D1 | E | 1595 | 1F | M | +/- | TSW | 07/96 ▸ 06/99 | 1H0121253P | 731265 | 628 377,5 | ALM |
| 1.6 i | 6K1/1D1/2A1/2D1/3A1/3D1 | E | 1595 | 1F | M | + | TSW | 05/94 ▸ 06/96 | 1H0121253P | 731265 | 628 377,5 | ALM |
| 1.6 i | 6K1/2D1/3D1 | E | 1595 | 1F | M | + | TSW | 07/96 ▸ 06/99 | 6K0121253AA | 731267 | 628 377,5 | ALM |
| 1.6 i | 6K1/2D1/3D1 | E | 1595 | 1F | M | + | TSW | 07/96 ▸ 06/99 | 6K0121253K | 730947 | 525 322 | ALM |
| 1.6 i | 6K1/1D1/2A1/2D1/3A1/3D1 | E | 1595 | 1F | M | - | TSW | 05/94 ▸ 06/99 | 6K0121253S | 730948 | 525 322 | ALM |
| 1.6 i | 6K1/1D1/2A1/2D1/3A1/3D1 | E | 1595 | 1F | M | | TSW | 05/94 ▸ 06/96 | 6K0121253H | 730948 | 525 322 | ALM |
| 1.6 i | 6K1/2D4/3D4 | E | 1595 | 1F | A | +/- | TSW | 05/97 ▸ 06/99 | 1H0121253P | 731265 | 628 377,5 | ALM |
| 1.6 i | 6K1/2D4/3D4 | E | 1595 | 1F | A | + | TSW | 05/97 ▸ 06/99 | 6K0121253AA | 731267 | 628 377,5 | ALM |
| 1.6 i | 6K1/2D4/3D4 | E | 1595 | 1F | A | + | TSW | 05/97 ▸ 06/99 | 6K0121253K | 730947 | 525 322 | ALM |
| 1.6 i | 6K1/2D4/3D4 | E | 1595 | 1F | A | - | TSW | 05/97 ▸ 08/98 | 6K0121253T | 731264 | 628 322 | ALM |
| 1.6 i | 6K1/2D4/3D4 | E | 1595 | 1F | A | | TSW | 08/98 ▸ 06/99 | 6K0121253N | 731266 | 628 322 | ALM |
| 1.6 i | 6K1/2D4/3D4 ▸ 6K-X-080 000 | E | 1595 | 1F | A | - | TSW | 05/97 ▸ 08/98 | 6K0121253G | 731266 | 628 322 | ALM |
| 1.6 i | 6K1/2W1/2W2/3W1/3W2/5W1/5W2 | E | 1598 | AFT | M | +/- | TSW | 12/95 ▸ 06/99 | 1H0121253P | 731265 | 628 377,5 | ALM |
| 1.6 i | 6K1/251/351 | E | 1598 | AEE | M | +/- | TSW | 09/97 ▸ 06/99 | 6K0121253J | 730946 | 430 322 | ALM |
| 1.6 i | 6K1/2E1/2E2/3E1/3E2 | E | 1598 | ABU | M | + | TSW | 02/93 ▸ 07/94 | 1H0121253L | 731267 | 628 377,5 | ALM |
| 1.6 i | 6K1/2E1/2E2/3E1/3E2 | E | 1598 | ABU | M | + | TSW | 02/93 ▸ 07/94 | 1HM121253D | 731268 | 628 377,5 | ALM |
| 1.6 i | 6K1/2W1/2W2/3W1/3W2/5W1/5W2 | E | 1598 | AFT | M | + | TSW | 12/95 ▸ 06/97 | 6K0121253K | 730947 | 525 322 | ALM |
| 1.6 i | 6K1/2F1/2W1/351/3F1/3W1/3W2/5W1/5W2 | E | 1598 | AEE,AFT,ALM | M | + | TSW | 07/96 ▸ 06/99 | 6K0121253AA | 731267 | 628 377,5 | ALM |
| 1.6 i | 6K1/2W1/3W1/3W2/5W1/5W2 | E | 1598 | AFT | M | + | TSW | 07/96 ▸ 06/99 | 6K0121253AS | 732710 | 628 377,5 | ALM |
| 1.6 i | 6K1/251/2F1/2W1/351/3F1/3W1/3W2/5W1/5W2 | E | 1598 | AEE,AFT,ALM | M | + | TSW | 06/97 ▸ 06/99 | 6K0121253A | 730945 | 628 322 | ALM |
| 1.6 i | 6K1/2E1/2E2/3E1/3E2 | E | 1598 | ABU | M | - | TSW | 02/93 ▸ 07/94 | 6K0121253 | 730947 | 525 322 | ALM |
| 1.6 i | 6K1/251/2E1/2E2/2F1/351/3E1/3E2/3F1 | E | 1598 | ABU,AEE,ALM | M | - | TSW | 02/93 ▸ 12/98 | 6K0121253K | 730947 | 525 322 | ALM |
| 1.6 i | 6K1/2W1/2W2/3W1/3W2/5W1 | E | 1598 | AFT | M | - | TSW | 12/95 ▸ 06/97 | 6K0121253A | 730945 | 628 322 | ALM |
| 1.6 i | 6K1/2W1/3W1/3W2/5W1/5W2 | E | 1598 | AFT | M | - | TSW | 06/97 ▸ 06/99 | 6K0121253AD | 732317 | 525 322 | ALM |
| 1.6 i | 6K1/251/2F1/351 ▸ 6K-X-080 000 | E | 1598 | AEE,ALM | M | - | TSW | 08/98 ▸ 06/99 | 6K0121253AA | 731267 | 628 377,5 | ALM |
| 1.6 i | 6K1/2E1/2E2/3E1/3E2 | E | 1598 | ABU | M | | TSW | 02/93 ▸ 07/94 | 1H0121253A | 731268 | 628 377,5 | ALM |
| 1.6 i | 6K1/2W1/5W1/5W2 | E | 1598 | AFT | M | | TSW | 07/96 ▸ 06/97 | 6K0121253A | 730945 | 628 322 | ALM |
| 1.8 i | 6K1/2M1/3M1 | E | 1781 | ADZ | M | +/- | TSW | 07/96 ▸ 06/99 | 1H0121253P | 731265 | 628 377,5 | ALM |
| 1.8 i,1.8 i 16V | 6K1/2C1/2C3/2F1/2M1 2T1/3C1/3C3/3F1/3M1/6G1/7G1 | E | 1781 | ABS,ACC,ADL,ADZ | M | + | TSW | 02/93 ▸ 06/96 | 1H0121253P | 731265 | 628 377,5 | ALM |
| 1.8 i | 6K1/2C1/2C3/2F1/2M1/3C1/3C3/3F1/3M1 | E | 1781 | ADZ | M | + | TSW | 07/94 ▸ 06/99 | 1H0121253D | 731025 | 628 322 | ALM |
| 1.8 i | 6K1/2M1/3M1 | E | 1781 | ADZ | M | + | TSW | 07/96 ▸ 06/99 | 6K0121253AA | 731267 | 628 377,5 | ALM |
| 1.8 i | 6K1/2M1/2T1/3M1 | E | 1781 | ACC,ADZ | M | + | TSW | 07/96 ▸ 06/99 | 6K0121253K | 730947 | 525 322 | ALM |
| 1.8 i | 6K1/2C1/2C3/2F1/2M1/2T1/3C1/3C3/3F1/3M1 | E | 1781 | ABS,ACC,ADZ | M | - | TSW | 02/93 ▸ 06/99 | 6K0121253S | 730948 | 525 322 | ALM |
| 1.8 i 16V | 6K1/6G1/7G1 | E | 1781 | ADL | M | - | TSW | 02/94 ▸ 06/96 | 6K0121253A | 730945 | 628 322 | ALM |
| 1.8 i | 6K1/2M1/3M1 ▸ 6K-X-080 001 ▸ | E | 1781 | ADZ | M | - | TSW | 08/98 ▸ 1999 | 6K0121253T | 731264 | 628 322 | ALM |
| 1.8 i | 6K1/2C1/2C3/2F1/2M1/2T1/3C1/3C3/3F1/3M1 | E | 1781 | ABS,ACC,ADZ | M | | TSW | 02/93 ▸ 06/96 | 6K0121253H | 730948 | 525 322 | ALM |
| 1.8 i | 6K12M1 | E | 1781 | ABS | M | | TSW | 02/93 ▸ 07/94 | 6K0121253S | 730948 | 525 322 | ALM |
| 1.8 i | 6K1/3F2/3F3 | E | 1781 | ABS | A | +/- | TSW | 02/93 ▸ 06/96 | 6K0121253G | 731266 | 628 322 | ALM |
| 1.8 i | 6K1/2C2/2F2/2M2/3C2/3F2/3F3/3M2 | E | 1781 | ABS,ADZ | A | + | TSW | 02/93 ▸ 06/96 | 1H0121253P | 731265 | 628 377,5 | ALM |
| 1.8 i | 6K1/2C2/2F2/2M2/3C2/3F2/3M2 | E | 1781 | ADZ | A | + | TSW | 07/94 ▸ 06/99 | 1H0121253D | 731025 | 628 322 | ALM |
| 1.8 i | 6K1/2C2/2M2/3C2/3M2 | E | 1781 | ADZ | A | + | TSW | 07/96 ▸ 06/99 | 6K0121253AA | 731267 | 628 377,5 | ALM |
| 1.8 i | 6K1/2C2/2M2/3C2/3M2 | E | 1781 | ADZ | A | + | TSW | 07/96 ▸ 06/99 | 6K0121253K | 730947 | 525 322 | ALM |
| 1.8 i | 6K1/2C2/2F2/2M2/3C2/3F2/3M2 | E | 1781 | ADZ | A | - | TSW | 07/94 ▸ 1999 | 6K0121253G | 731266 | 628 322 | ALM |
| 1.8 i | 6K1/2C2/2M2/3C2/3M2 | E | 1781 | ADZ | A | - | TSW | 07/96 ▸ 06/99 | 6K0121253N | 731266 | 628 322 | ALM |
| 1.8 i | 6K1/2C2/2M2/3C2/3M2 ▸ 6K-X-080 001 ▸ | E | 1781 | ADZ | A | - | TSW | 08/98 ▸ 06/99 | 1HM121253D | 731268 | 628 377,5 | ALM |
| 1.8 i | 6K1/2C1/2C3/2F1/2M1/3C1/3C3/3F1/3M1 ▸ 6K-X-080 000 | E | 1781 | ADZ | M | - | TSW | 07/94 ▸ 08/98 | 6K0121253G | 731266 | 628 322 | ALM |
| 1.8 i | 6K1/2C2/2M2/3C2/3M2 ▸ 6K-X-080 000 | E | 1781 | ADZ | A | +/- | TSW | 07/96 ▸ 06/99 | 1H0121253P | 731265 | 628 377,5 | ALM |
| 2.0 i | 6K15L1 | E | 1984 | AGG | M | +/- | TSW | 07/96 ▸ 06/99 | 6K0121253AC | 731728 | 628 322 | ALM |
| 2.0 i | 6K1/3H1/5H1/7H1 | E | 1984 | 2E | M | + | TSW | 02/93 ▸ 06/96 | 1H0121253P | 731265 | 628 377,5 | ALM |
| 2.0 i | 6K1/5L1/7L1 | E | 1984 | AGG | M | + | TSW | 07/95 ▸ 1999 | 1HM121253D | 731268 | 628 377,5 | ALM |
| 2.0 i,2.0 i 16V | 6K1/5L1/611/7L1 | E | 1984 | ABF,AGG | M | + | TSW | 07/95 ▸ 06/99 | 6K0121253AA | 731267 | 628 377,5 | ALM |

Radiator Radiateur Motorkühler Radiatore di raffreddamento Radiator Radyatör Radiador Радиатор vízhűtő Vodní chladič Radiator Ψυγείο



• **New** Nouveau **Nuevo** Novo **Nuovo** Nieuw **Neu** Nowość **Yeni** Новый Νέο **Nový**

## IBIZA (93>99) (.../...)

| Type Ctr. | | CC | | AC | | | OE | Valeo | DIM. | | TECH |
|---|---|---|---|---|---|---|---|---|---|---|---|
| 2.0 i 6K1/3H1/5H1/7H1 | E | 1984 | 2E | M | - | TSW | 02/93 ▸ 06/96 | 6K0121253A | 730945 | 628 | 322 | ALM |
| 2.0 i,2.0 i 16V 6K1/5L1/611/7L1 | E | 1984 | ABF,AGG | M | - | TSW | 07/95 ▸ 06/99 | 6K0121253AC | 731728 | 628 | 322 | ALM |
| 1.9 D,1.9 TD KK13K1 ; 6K1/1N1/1X1 1Y2/2N1/2X1/2Y2/3E1/3K1/3Q1/3X1/3Y2/5E1/5K1 5Q1/7E1 | D | 1896 | 1Y,AAZ | M | +/- | TSW | 02/93 ▸ 06/99 | 1H0121253P | 731265 | 628 | 377,5 | ALM |
| 1.9 D 6K1/1Y2/2Y2/3Y2 | D | 1896 | 1Y | M | +/- | TSW | 07/96 ▸ 06/99 | 6K0121253AA | 731267 | 628 | 377,5 | ALM |
| 1.9 SDi,1.9 TD,1.9 TDi 6K1/1Z2/2N2/2Z2/3E1 3N2/3Z2/581/5E1/5N2 | D | 1896 | 1Z,AAZ,AEY,AFN,AHU | M | + | TSW | 09/95 ▸ 06/99 | 6K0121253AA | 731267 | 628 | 377,5 | ALM |
| 1.9 SDI,1.9 TDi 6K1/1Z2/2N2/2Z2/3N2 3Z2/5N2 | D | 1896 | 1Z,AEY,AHU | M | + | TSW | 12/95 ▸ 06/99 | 6K0121253A | 730945 | 628 | 322 | ALM |
| 1.9 D 6K1/1Y2/2Y2/3Y2 | D | 1896 | 1Y | M | + | TSW | 07/96 ▸ 1999 | 6K0121253M | 731265 | 628 | 377,5 | ALM |
| 1.9 D,1.9 TD 6K1/1Y2/2Y2/3E1/3Y2 5E1 | D | 1896 | 1Y,AAZ | M | + | TSW | 07/96 ▸ 06/99 | 6K0121253K | 730947 | 525 | 322 | ALM |
| 1.9 TDi 6K1581 | D | 1896 | AFN | M | + | TSW | 03/97 ▸ 1999 | 1HM121253D | 731268 | 628 | 377,5 | ALM |
| 1.9 D 6K1/1N1/1X1/1Y2/2N1/2X1/2Y2/3X1/3Y2 | D | 1896 | 1Y | M | - | TSW | 02/93 ▸ 08/98 | 6K0121253G | 731266 | 628 | 322 | ALM |
| 1.9 SDI 6K1/1Z2/2Z2/3Z2 | D | 1896 | AEY | M | - | TSW | 09/95 ▸ 06/99 | 6K0121253J | 730946 | 430 | 322 | ALM |
| 1.9 TDi 6K1/2N2/3N2/581/5N2 | D | 1896 | 1Z,AFN,AHU | M | - | TSW | 07/96 ▸ 06/99 | 6K0121253AC | 731728 | 628 | 322 | ALM |
| 1.9 D 6K1/1Y2/2Y2/3Y2 | D | 1896 | 1Y | M | - | TSW | 07/96 ▸ 08/98 | 6K0121253T | 731264 | 628 | 322 | ALM |
| 1.9 TD KK13K1 ; 6K1/3E1/3K1 3Q1/5E1/5K1/5Q1/7E1 | D | 1896 | AAZ | M | | TSW | 02/93 ▸ 06/96 | 6K0121253M | 731265 | 628 | 377,5 | ALM |
| 1.9 SDi 6K1/1Z2/2Z2/3Z2 | D | 1896 | AEY | M | | TSW | 12/95 ▸ 06/99 | 6K0121253R | 730946 | 430 | 322 | ALM |
| 1.9 D 6K1/1Y2/2Y2/3Y2 | D | 1896 | 1Y | M | | TSW | 08/98 ▸ 06/99 | 6K0121253N | 731266 | 628 | 322 | ALM |

## IBIZA (99>2001)

| | | | | | | | | | | | | |
|---|---|---|---|---|---|---|---|---|---|---|---|---|
| 1.0 i,1.0 i 16V 6K1/1A6/1B6/1V6/2A6 2B6/2Q6/2V6/2Y6/3A6/3B6/3V6/3Y6 | E | 999 | ALD,ANV,AST,AUC,AVZ | M | +/- | TSW | 08/99 ▸ 11/01 | 6K0121253AG | 732698 | 647 | 377 | ALM |
| 1.0 i 6K1/1A6/1V6/2A6/2V6/3A6/3V6 | E | 999 | ALD,ANV | M | + | TSW | 08/99 ▸ 11/01 | 6K0121253AG | 732698 | 647 | 377 | ALM |
| 1.4 i,1.4 i 16V 6K1/1D6/1U6/2D6/2E6 2R6/2U6/3D6/3E6/3R6/3U6/5R6 | E | 1390 | ANW,APE,AQQ,AUA,AUB,AUD | M | +/- | TSW | 08/99 ▸ 11/01 | 6K0121253AG | 732698 | 647 | 377 | ALM |
| 1.4 i,1.4 i 16V 6K1/1C6/1U6/2C6/2E6 2R6/3C6/3R6/3U6/5R6 | E | 1390 | AKK,ANW,APE,AQQ | M | + | TSW | 08/99 ▸ 11/01 | 6K0121253AG | 732698 | 647 | 377 | ALM |
| 1.6 i 6K1/2H6/2S6/2T6/3H6/3T6/5H6/5T6 | E | 1595 | AKL,APF,AUR | M | +/- | TSW | 06/99 ▸ 11/01 | 6K0121253AG | 732698 | 647 | 377 | ALM |
| 1.6 i 6K1/2G8/2S7/3G8 | E | 1595 | AEH,AKL | A | +/- | TSW | 01/00 ▸ 11/01 | 6K0121253AG | 732698 | 647 | 377 | ALM |
| 1.6 i 6K12S7 | E | 1595 | AKL | A | + | | 02/00 ▸ 11/01 | 6K0121253AE | | 647 | 377 | ALM |
| 1.6 i 6K12S7 | E | 1595 | AKL | A | | TSW | 02/00 ▸ 11/01 | 6K0121253BC | 732698 | 647 | 377 | ALM |
| 1.6 i 6K1/2F1/3F1 | E | 1598 | ALM | M | +/- | TSW | 08/99 ▸ 11/01 | 6K0121253AG | 732698 | 647 | 377 | ALM |
| 1.6 i 6K12F1 | E | 1598 | ALM | M | + | TSW | 08/99 ▸ 11/01 | 6K0121253AG | 732698 | 647 | 377 | ALM |
| 1.8 i Turbo 20V 6K1/5J6/6J6 | E | 1781 | AQX,AYP | M | + | TSW | 12/99 ▸ 11/01 | 6K0121253BC | 732698 | 647 | 377 | ALM |
| 1.8 i Turbo 20V 6K1/5J6/6J6 | E | 1781 | AQX,AYP | M | + | | 12/99 ▸ 11/01 | 6K0121253AE | | 647 | 377 | ALM |
| 1.9 SDi,1.9 TDi 6K1/1K6/1M6/2K6/2L6 2M6/2N6/3K6/3L6/3M6/3N6/5L6/5N6 | D | 1896 | AGP,AGR,ALH,AQM | M | +/- | TSW | 04/99 ▸ 11/01 | 6K0121253AG | 732698 | 647 | 377 | ALM |
| 1.9 TDi 6K1/3X6/5X6 | D | 1896 | ASV | M | + | TSW | 03/99 ▸ 11/01 | 6K0121253AG | 732698 | 647 | 377 | ALM |

## IBIZA (2001>)

| | | | | | | | | | | | | |
|---|---|---|---|---|---|---|---|---|---|---|---|---|
| 1.2 i 12V 6L1/1D4/2A4/2D4/3A4 3D4 | E | 1198 | AZQ,BME,BXV | M | +/- | TSW | 11/01 ▸ 11/09 | 6Q0121253Q | 732862 | 632 | 414,5 | ALM |
| 1.2 i,1.2 i 12V 6L1/1D4/2A4/2B4/2D4 3A4/3D4 | E | 1198 | AZQ,BBM,BME,BXV | M | +/- | TSW | 11/01 ▸ 11/09 | 6Q0121253R | 732864 | 632 | 414,5 | ALM |
| 1.2 i 12V 6L1/1D4/2D4/3D4 | E | 1198 | AZQ,BME | M | +/- | TSW | 01/02 ▸ 06/06 | 6K0121253A | 730945 | 628 | 322 | ALM |
| 1.2 i 6L12B4 | E | 1198 | BBM | M | + | TSW | 06/07 ▸ 05/08 | 6Q0121253Q | 732862 | 632 | 414,5 | ALM |
| 1.2 i 12V 6L1/1D4/2D4/3D4 | E | 1198 | AZQ,BME | M | - | TSW | 11/01 ▸ 06/06 | 6Q0121253K | 732863 | 430 | 414,5 | ALM |
| 1.4 i 16V 6L1/2E4/2G4/2H4/3E4 3G4/3H4/5E4/5G4/5H4 | E | 1390 | AUB,BBY,BBZ,BKY,BXW | M | +/- | TSW | 09/01 ▸ 11/09 | 6Q0121253R | 732864 | 632 | 414,5 | ALM |
| 1.4 i 16V 6L1/2H4/3H4 | E | 1390 | BBZ | M | +/- | TSW | 05/04 ▸ 11/09 | 6Q0121253AE | 732864 | 632 | 414,5 | ALM |
| 1.4 i 16V 6L1/2G4/2H4/3G4/3H4 5G4/5H4 | E | 1390 | AUB,BBY,BBZ,BKY | M | + | TSW | 09/01 ▸ 11/09 | 6K0121253A | 730945 | 628 | 322 | ALM |
| 1.4 i 16V 6L1/2E4/2G4/2H4/3E4 3G4/3H4/5E4/5G4/5H4 | E | 1390 | AUB,BBY,BBZ,BKY,BXW | M | + | TSW | 09/01 ▸ 11/09 | 6Q0121253Q | 732862 | 632 | 414,5 | ALM |
| 1.4 i 16V 6L1/2E4/2G4/3E4/3G4 5E4/5G4 | E | 1390 | BBY,BXW | M | - | TSW | 01/02 ▸ 11/09 | 6Q0121253K | 732863 | 430 | 414,5 | ALM |
| 1.4 i 16V 6L1/2G4/3G4/5G4 | E | 1390 | BKY | M | - | | 05/04 ▸ 12/07 | 6K0121253AE | | 647 | 377 | ALM |
| 1.4 i 16V 6L1/2E4/3E4/5E4 | E | 1390 | BXW | M | - | TSW | 05/06 ▸ 11/09 | 6Q0121253AE | 732864 | 632 | 414,5 | ALM |
| 1.4 i 16V 6L1/2G4/2H4/3G4/3H4 5G4/5H4 | E | 1390 | AUB,BBY,BBZ,BKY | M | | TSW | 09/01 ▸ 11/09 | 6Q0121253AE | 732864 | 632 | 414,5 | ALM |
| 1.4 i 16V 6L1/2G4/2H4/3G4/3H4 5G4/5H4 | E | 1390 | AUB,BBY,BBZ,BKY | M | | TSW | 09/01 ▸ | 6Q0121253J | 732863 | 430 | 414,5 | ALM |
| 1.4 i 16V 6L1/2G4/3G4/5G4 | E | 1390 | BKY | M | | TSW | 05/04 ▸ 12/07 | 6Q0121253K | 732863 | 430 | 414,5 | ALM |
| 1.4 i 16V 6L1/2G3/3G3 | E | 1390 | BBY,BKY | A | +/- | TSW | 06/02 ▸ 12/07 | 6Q0121253R | 732864 | 632 | 414,5 | ALM |
| 1.4 i 16V 6L1/2G3/3G3 | E | 1390 | BKY | A | + | TSW | 05/04 ▸ 12/07 | 6K0121253A | 730945 | 628 | 322 | ALM |
| 1.4 i 16V 6L1/2G3/3G3 | E | 1390 | BKY | A | - | | 05/04 ▸ 12/07 | 6K0121253AE | | 647 | 377 | ALM |

| Type Ctr. | | CC | | AC | | | | OE | Valeo | DIM. | TECH |
|---|---|---|---|---|---|---|---|---|---|---|---|

# SEAT (.../...)

## IBIZA (2001>) (.../...)

| | | | | | | | | | | | | | |
|---|---|---|---|---|---|---|---|---|---|---|---|---|---|
| 1.6 i | 6L1/2C4/2K4/3C4/3K4/5C4/5K4 | E | 1598 | BAH,BTS | M | +/- | TSW | 04/03 ▸ 11/09 | 6Q0121253R | **732864** | 632 | 414,5 | ALM |
| 1.6 i | 6L1/2C4/3C4/5C4 | E | 1598 | BTS | M | +/- | TSW | 11/06 ▸ 11/09 | 6Q0121253K | **732863** | 430 | 414,5 | ALM |
| 1.6 i | 6L1/2K4/3K4 | E | 1598 | BAH | M | + | TSW | 04/03 ▸ 04/04 | 6K0121253A | **730945** | 628 | 322 | ALM |
| 1.6 i | 6L1/2C4/2K4/3C4/3K4/5C4/5K4 | E | 1598 | BAH,BTS | M | + | TSW | 04/03 ▸ 11/09 | 6Q0121253Q | **732862** | 632 | 414,5 | ALM |
| 1.6 i | 6L1/2C4/3C4/5C4/5K4 | E | 1598 | BAH,BTS | M | - | TSW | 11/06 ▸ 11/09 | 6Q0121253AE | **732864** | 632 | 414,5 | ALM |
| 1.6 i | 6L1/2K4/3K4 | E | 1598 | BAH | M | | TSW | 04/03 ▸ 04/04 | 6Q0121253AE | **732864** | 632 | 414,5 | ALM |
| 1.6 i | 6L1/2K4/3K4 | E | 1598 | BAH | M | | TSW | 04/03 ▸ | 6Q0121253J | **732863** | 430 | 414,5 | ALM |
| 1.6 i | 6L1/2C7/3C7 | E | 1598 | BTS | A | +/- | TSW | 11/07 ▸ 11/09 | 6Q0121253R | **732864** | 632 | 414,5 | ALM |
| 1.6 i | 6L1/2C7/3C7 | E | 1598 | BTS | A | +/- | TSW | 11/07 ▸ 11/09 | 6Q0121253K | **732863** | 430 | 414,5 | ALM |
| 1.6 i | 6L1/2C7/3C7 | E | 1598 | BTS | A | + | TSW | 11/07 ▸ 11/09 | 6Q0121253Q | **732862** | 632 | 414,5 | ALM |
| 1.6 i | 6L1/2C7/3C7 | E | 1598 | BTS | A | - | TSW | 11/07 ▸ 11/09 | 6Q0121253AE | **732864** | 632 | 414,5 | ALM |
| 1.8 i Turbo 20V | 6L1/6P4/7J4 | E | 1781 | BBU,BJX,BKV | M | +/- | TSW | 12/03 ▸ | 6Q0121253AD | **732864** | 632 | 414,5 | ALM |
| 1.8 i Turbo 20V | 6L16P4 | E | 1781 | BBU | M | +/- | TSW | 05/04 ▸ 02/08 | 6LL121253 | **732864** | 632 | 414,5 | ALM |
| 097 831 ▸ | | | | | | | | | | | | | |
| 1.8 i Turbo 20V | 6L17J4 | E | 1781 | BJX | M | | TSW | 12/03 ▸ 05/08 | 6LL121253 | **732864** | 632 | 414,5 | ALM |
| 097 831 ▸ | | | | | | | | | | | | | |
| 2.0 i | 6L1/214/2L4/2T4/314/3L4/3T4/5L4/5T4 | E | 1984 | AZL,BBX | M | +/- | TSW | 07/02 ▸ 11/09 | 6Q0121253R | **732864** | 632 | 414,5 | ALM |
| 1.4 TDi | 6L1/204/254/264/274 304/354/364/374/504/554/564/574 | D | 1422 | AMF,BMS,BNM,BNV | M | +/- | TSW | 05/02 ▸ 11/09 | 6Q0121253R | **732864** | 632 | 414,5 | ALM |
| 1.9 TDi | 6L1/224/284/324/336 384/524/536/584/736 | D | 1896 | ASZ,ATD,BLT,BMT | M | +/- | TSW | 09/01 ▸ 11/09 | 6Q0121253R | **732864** | 632 | 414,5 | ALM |
| 1.9 SDi | 6L1/114/214/314 | D | 1896 | ASY | M | +/- | TSW | 01/02 ▸ 12/05 | 6K0121253A | **730945** | 628 | 322 | ALM |
| 1.9 SDi,1.9 TDi | 6L1/114/214/224/324 524 | D | 1896 | ASY,AXR | M | +/- | TSW | 01/02 ▸ 11/09 | 6Q0121253Q | **732862** | 632 | 414,5 | ALM |
| 1.9 TDi | 6L1646 | D | 1896 | BPX,BUK | M | +/- | TSW | 12/03 ▸ 02/08 | 6LL121253 | **732864** | 632 | 414,5 | ALM |
| 097 831 ▸ | | | | | | | | | | | | | |
| 1.9 SDi,1.9 TDi | 6L1/114/214/224/314 324/336/524/536/736 | D | 1896 | ASY,ASZ,ATD,BLT | M | + | TSW | 09/01 ▸ 11/09 | 6Q0121253Q | **732862** | 632 | 414,5 | ALM |
| 1.9 TDi | 6L1/336/536/736 | D | 1896 | ASZ,BLT | M | + | TSW | 11/01 ▸ 11/09 | 6K0121253A | **730945** | 628 | 322 | ALM |
| 1.9 SDi,1.9 TDi | 6L1/114/214/224/284 314/324/336/384/524/736 | D | 1896 | ASY,ASZ,AXR,BMT | M | + | TSW | 11/01 ▸ 11/09 | 6Q0121253R | **732864** | 632 | 414,5 | ALM |
| 1.9 TDi | 6L1/224/324/524 | D | 1896 | ATD | M | - | TSW | 09/01 ▸ 05/05 | 6K0121253A | **730945** | 628 | 322 | ALM |
| 1.9 TDi | 6L1/336/536/736 | D | 1896 | ASZ | M | - | TSW | 11/01 ▸ | 6Q0121253AD | **732864** | 632 | 414,5 | ALM |
| 1.9 TDi | 6L1/224/324/336 | D | 1896 | ASZ,ATD | M | - | TSW | 11/02 ▸ 09/05 | 6Q0121253R | **732864** | 632 | 414,5 | ALM |
| 1.9 TDi | 6L1/224/324/524 | D | 1896 | ATD | M | - | TSW | 08/04 ▸ | 6LL121253 | **732864** | 632 | 414,5 | ALM |
| 6L-5R097 831 ▸ | | | | | | | | | | | | | |
| 1.9 TDi | 6L1/284/384/584 | D | 1896 | BMT | M | - | TSW | 09/06 ▸ 11/09 | 6Q0121253Q | **732862** | 632 | 414,5 | ALM |
| 1.9 TDi | 6L1/336/536/736 | D | 1896 | ASZ | M | | TSW | 11/01 ▸ 09/05 | 6LL121253 | **732864** | 632 | 414,5 | ALM |
| 097 831 ▸ | | | | | | | | | | | | | |
| 1.9 TDi | 6L1/224/324 | D | 1896 | ATD | M | | TSW | 11/02 ▸ 05/05 | 6K0121253A | **730945** | 628 | 322 | ALM |
| 1.9 TDi | 6L1646 | D | 1896 | BPX | M | +/- | TSW | 12/03 ▸ | 6Q0121253AD | **732864** | 632 | 414,5 | ALM |
| ▸ 097 830 | | | | | | | | | | | | | |
| 1.9 TDi | 6L1/336/736 | D | 1896 | ASZ | M | | TSW | 03/04 ▸ | 6Q0121253AD | **732864** | 632 | 414,5 | ALM |

## IBIZA VI (2008>)

| | | | | | | | | | | | | | |
|---|---|---|---|---|---|---|---|---|---|---|---|---|---|
| 1.2 i 12V | 6J1/2C4/3C4/5C4 6J5/2C4/3C4 | E | 1198 | BZG | M | | TSW | 03/08 ▸ 05/10 | 6Q0121253K | **732863** | 430 | 414,5 | ALM |
| 1.4 i 16V | 6J1/2E4/3E4/5E4 6J5/2E4/3E4/5E4 | E | 1390 | BXW | M | +/- | TSW | 03/08 ▸ | 6Q0121253K | **732863** | 430 | 414,5 | ALM |

## LEON I (99>2006)

| | | | | | | | | | | | | | |
|---|---|---|---|---|---|---|---|---|---|---|---|---|---|
| 1.4 i 16V | 1M1/2C4/3C4/5C4/8C4 | E | 1390 | APE | M | +/- | TSW | 11/99 ▸ 05/00 | 1J0121253G | •**736083** | 430 | 414 | ALM |
| 1.4 i 16V | 1M1/2C4/3C4/5C4/8C4 | E | 1390 | APE | M | +/- | TSW | 11/99 ▸ 05/00 | 1J0121253G | **731607** | 430 | 414 | ALM |
| 1.4 i 16V | 1M1/2C4/3C4/5C4/8C4 | E | 1390 | AXP,BCA | M | +/- | TSW | 05/01 ▸ 10/05 | 1J0121253AD | **731606** | 414,5 | 650 | ALM |
| 2R-000 001 ▸ | | | | | | | | | | | | | |
| 1.4 i 16V | 1M1/2D4/3D4/5D4/8D4 | E | 1390 | AHW | M | + | TSW | 05/01 ▸ 05/02 | 1J0121253AD | **731606** | 414,5 | 650 | ALM |
| 2R-000 001 ▸ | | | | | | | | | | | | | |
| 1.4 i 16V | 1M1/2C4/2D4/3C4/3D4 5C4/5D4/8C4/8D4 | E | 1390 | AHW,AXP,BCA | M | - | TSW | 01/00 ▸ 10/05 | 1J0121253G | **731607** | 430 | 414 | ALM |
| 1.4 i 16V | 1M1/2C4/2D4/3C4/3D4 5C4/5D4/8C4/8D4 | E | 1390 | AHW,AXP,BCA | M | - | TSW | 01/00 ▸ 10/05 | 1J0121253G | •**736083** | 430 | 414 | ALM |
| 1.4 i 16V | 1M1/2C4/2D4/3C4/3D4 5C4/5D4/8C4/8D4 | E | 1390 | AHW,APE,AXP | M | | TSW | 11/99 ▸ 05/01 | 1J0121253P | **731606** | 414,5 | 650 | ALM |
| ▸ 1R-090 000 | | | | | | | | | | | | | |
| 1.6 i,1.6 i 16V | 1M1/3A4/3KC/5KC/8KC | E | 1595 | AUS,AZD,BFQ | M | +/- | TSW | 06/00 ▸ 05/06 | 1J0121253AD | **731606** | 414,5 | 650 | ALM |
| 1.6 i | 1M13A4 | E | 1595 | BFQ | M | +/- | TSW | 10/05 ▸ 05/06 | 1J0121253N | **732175** | 650 | 414,5 | ALM |
| 1.6 i,1.6 i 16V | 1M1/3J4/3KC/5J4/5KC 8J4/8KC | E | 1595 | AKL,AUS,AZD,BCB | M | - | TSW | 11/99 ▸ 10/05 | 1J0121253N | **732175** | 650 | 414,5 | ALM |

Radiator Radiateur Motorkühler Radiatore di raffreddamento Radyatör Radiator Radiador Радиатор vízhűtő Vodní chladič Radiator Ψυγείο



• **New** Nouveau **Nuevo** Novo **Nuovo** Nieuw **Neu** Nowość **Yeni** Новый Νέο **Nový**

| Type Ctr. | | CC | | AC | | | OE | Valeo | DIM. | TECH |
|---|---|---|---|---|---|---|---|---|---|---|

## SEAT (.../...)

## LEON I (99>2006) (.../...)

| | | | | | | | | | | | | |
|---|---|---|---|---|---|---|---|---|---|---|---|---|
| 1.6 i,1.6 i 16V<br>2R-000 001 ▸ | 1M1/3J4/5J4/5KC/8J4 | E | 1595 | AKL,BCB | M | | TSW | 05/01 ▸ 10/05 | 1J0121253AD | **731606** | 414,5 650 | ALM |
| 1.6 i | 1M1/3H3/5H3/8H3 | E | 1595 | AEH | A | +/- | TSW | 08/99 ▸ 04/04 | 1J0121253N | **732175** | 650 414,5 | ALM |
| 1.6 i | 1M1/3H3/5H3/8H3 | E | 1595 | AEH | A | +/- | TSW | 08/99 ▸ 04/04 | 1J0121253AD | **731606** | 414,5 650 | ALM |
| 1.6 i | 1M1/3H3/5H3/8H3 | E | 1595 | AEH | A | | TSW | 08/99 ▸ 05/02 | 1H0121253P | **731265** | 628 377,5 | ALM |
| 1.6 i,1.6 i 16V<br>▸ 1R-090 000 | 1M1/3J4/3KC/5J4/5KC<br>8J4/8KC | E | 1595 | AKL,AUS,AZD | M | | TSW | 11/99 ▸ 05/01 | 1J0121253P | **731606** | 414,5 650 | ALM |
| 1.6 i<br>▸ 1R-090 000 | 1M18H3 | E | 1595 | AEH | A | | TSW | 02/00 ▸ 05/01 | 1J0121253P | **731606** | 414,5 650 | ALM |
| 1.8 i 20V,1.8 i Turbo 20V<br>2R-000 001, 1-028 001 ▸ | 1M1/3Q4/536/559/599<br>5P4/5Q4/636/736/759/8P4/8Q4 | E | 1781 | AGN,AJQ,APG,APP,ARY,AUQ | M | +/- | TSW | 11/99 ▸ 10/05 | 1J0121253AD | **731606** | 414,5 650 | ALM |
| 1.8 i Turbo 20V | 1M1/516/586 | E | 1781 | AMK,BAM | M | +/- | TSW | 05/02 ▸ 05/06 | 1J0121253S | **732427** | 648,6 414 | ALB |
| 1.8 i 20V | 1M1/5P4/8P4 | E | 1781 | AGN | M | + | TSW | 11/99 ▸ 12/03 | 1J0121253N | **732175** | 650 414,5 | ALM |
| 1.8 i 20V | 1M1/3Q4/5P4/5Q4/8P4<br>8Q4 | E | 1781 | AGN,APG | M | - | TSW | 11/99 ▸ 10/05 | 1J0121253N | **732175** | 650 414,5 | ALM |
| 1.8 i 20V<br>2R-000 001 ▸ | 1M1/3Q3/5Q3/8Q3 | E | 1781 | APG | A | +/- | TSW | 05/01 ▸ 10/05 | 1J0121253AD | **731606** | 414,5 650 | ALM |
| 1.8 i 20V | 1M1/3Q3/5Q3/8Q3 | E | 1781 | APG | A | - | TSW | 09/00 ▸ 10/05 | 1J0121253N | **732175** | 650 414,5 | ALM |
| 1.8 i 20V,1.8 i Turbo 20V<br>▸ 1-028 000 | 1M1/536/5P4/8P4 | E | 1781 | AGN,APP | M | | TSW | 08/99 ▸ 11/00 | 1H0121253P | **731265** | 628 377,5 | ALM |
| 1.8 i 20V<br>▸ 1R-090 000 | 1M1/3Q4/5P4/5Q4/8P4<br>8Q4 | E | 1781 | AGN,APG | M | | TSW | 06/00 ▸ 05/01 | 1J0121253P | **731606** | 414,5 650 | ALM |
| 1.8 i 20V<br>▸ 1R-090 000 | 1M1/3Q3/5Q3/8Q3 | E | 1781 | APG | A | | TSW | 09/00 ▸ 05/01 | 1J0121253P | **731606** | 414,5 650 | ALM |
| 2.8 i V6 24V | 1M1/6W7/7W7 | E | 2792 | AUE,BDE | M | +/- | TSW | 10/00 ▸ 04/04 | 1J0121253S | **732427** | 648,6 414 | ALB |
| 1.9 SDi,1.9 TDi | 1M1/204/304/324/344<br>346/374/3B4/524/546/574/824/844/846/874/8B4 | D | 1896 | AGR,AHF,ALH,AQM,ASV,ASZ | M | +/- | TSW | 10/99 ▸ 05/06 | 1J0121253AD | **731606** | 414,5 650 | ALM |
| 1.9 TDi | 1M1/344/374/574/844<br>874 | D | 1896 | AGR,AHF | M | +/- | TSW | 11/99 ▸ 09/02 | 1J0121253N | **732175** | 650 414,5 | ALM |
| 1.9 TDi | 1M1/566/567/666/667<br>766/767 | D | 1896 | ARL | M | +/- | TSW | 09/00 ▸ 10/05 | 1J0121253AC | **732867** | 648,6 414,5 | ALB |
| 1.9 TDi | 1M13V4 | D | 1896 | AXR | M | + | TSW | 10/05 ▸ 05/06 | 1J0121253AD | **731606** | 414,5 650 | ALM |
| 1.9 TDi | 1M1/324/524/824 | D | 1896 | ASV | M | - | TSW | 10/99 ▸ 05/06 | 1J0121253G | •**736083** | 430 414 | ALM |
| 1.9 SDi,1.9 TDi | 1M1/204/304/324/3B4<br>3V4/524/824/8B4 | D | 1896 | ALH,AQM,ASV,AXR | M | - | TSW | 10/99 ▸ 05/06 | 1J0121253N | **732175** | 650 414,5 | ALM |
| 1.9 TDi | 1M1/324/524/824 | D | 1896 | ASV | M | - | TSW | 10/99 ▸ 05/06 | 1J0121253G | **731607** | 430 414 | ALM |
| 1.9 TDi<br>2R-000 001 ▸ | 1M1/324/344/524/824<br>844 | D | 1896 | AGR,ASV | M | | TSW | 05/01 ▸ 05/06 | 1J0121253AD | **731606** | 414,5 650 | ALM |
| 1.9 SDi,1.9 TDi<br>▸ 1R-090 000 | 1M1/204/304/324/374<br>3B4/524/574/824/844/874/8B4 | D | 1896 | AGR,AHF,ALH,AQM,ASV | M | | TSW | 10/99 ▸ 05/01 | 1J0121253P | **731606** | 414,5 650 | ALM |
| 1.9 TDi | 1M1/344/374/574/844<br>874 | D | 1896 | AGR,AHF | M | | TSW | 11/99 ▸ 05/01 | 1H0121253P | **731265** | 628 377,5 | ALM |

## LEON II (2005>2010)

| | | | | | | | | | | | | |
|---|---|---|---|---|---|---|---|---|---|---|---|---|
| 1.4 i 86 16V | 1P11E2 | E | 1390 | BXW | M | +/- | TSW | 06/06 ▸ 05/10 | 1K0121251P | **734332** | 640 414,5 | ALM |
| 1.4 i 86 16V | 1P11E2 | E | 1390 | BXW | M | + | TSW | 06/06 ▸ 05/10 | 1K0121251AR | **735120** | 650 414,5 | ALM |
| 1.4 TFSi 125 16V | 1P1/1H1/2H1 | E | 1390 | CAXC | M | | TSW | 11/07 ▸ 05/10 | 1K0121253AP | **732872** | 650 414,5 | ALM |
| 1.6 i 102 | 1P1/1D2/2D2 | E | 1595 | BSE | M | +/- | TSW | 07/05 ▸ 05/10 | 1K0121251P | **734332** | 640 414,5 | ALM |
| 1.6 i 102 | 1P1/1D2/2D2 | E | 1595 | BSF | M | + | TSW | 07/05 ▸ 05/10 | 1K0121251F | **734335** | 640 414,5 | ALM |
| 1.6 i 102 | 1P1/1D2/2D2 | E | 1595 | BSF,CCSA | M | | TSW | 07/05 ▸ 05/10 | 1K0121251P | **734332** | 640 414,5 | ALM |
| 1.6 i 102 | 1P1/1D2/2D2 | E | 1595 | BSE,BSF | M | | TSW | 07/05 ▸ | 1K0121251AR | **735120** | 650 414,5 | ALM |
| 2.0 TFSi 16V<br>2.0 TFSi 185 16V<br>2.0 TFSi 241 16V | 1P1/2B1/2P1/591 | E | 1984 | BWA,BWJ | M | +/- | Air Seal | 11/05 ▸ | 1K0121251AB | **734333** | 650 454,3 | ALB |
| 2.0 FSi 150 16V | 1P1/1M1/2M1 | E | 1984 | BLR,BLY,BVY,BVZ | M | + | TSW | 07/05 ▸ 05/10 | 1K0121251AR | **735120** | 650 414,5 | ALM |
| 2.0 FSi 150 16V | 1P1/1M1/2M1 | E | 1984 | BLR,BLY | M | + | TSW | 07/05 ▸ | 1K0121251E | **734335** | 640 414,5 | ALM |
| 2.0 FSi 150 16V | 1P12M1 | E | 1984 | BVZ | M | - | TSW | 11/05 ▸ 05/10 | 1K0121251AR | **735120** | 650 414,5 | ALM |
| 2.0 FSi 150 16V | 1P1/1M1/2M1 | E | 1984 | BVY,BVZ | M | - | TSW | 11/05 ▸ | 1K0121251E | **734335** | 640 414,5 | ALM |
| 2.0 TFSi 200 16V | 1P15P1 | E | 1984 | BWA | M | | Air Seal | 11/05 ▸ 03/09 | 1K0121251AB | **734333** | 650 454,3 | ALB |
| 2.0 TFSi 16V<br>2.0 TFSi 200 16V | 1P1/1D2/5P3 | E | 1984 | BWA | A | +/- | Air Seal | 11/05 ▸ | 1K0121251AB | **734333** | 650 454,3 | ALB |
| 2.0 FSi 150 16V | 1P1/1M3/2M3 | E | 1984 | BLR,BLY | A | + | TSW | 07/05 ▸ | 1K0121251E | **734335** | 640 414,5 | ALM |
| 2.0 FSi 150 16V | 1P1/1M3/2M3 | E | 1984 | BLR,BLY,BVY | A | + | TSW | 07/05 ▸ 03/09 | 1K0121251AR | **735120** | 650 414,5 | ALM |
| 2.0 FSi 150 16V | 1P1/1M3/2M3 | E | 1984 | BVY,BVZ | A | - | TSW | 11/05 ▸ | 1K0121251E | **734335** | 640 414,5 | ALM |
| 2.0 FSi 150 16V | 1P1/1M3/2M3 | E | 1984 | BVY,BVZ | A | - | TSW | 11/05 ▸ 05/10 | 1K0121251AR | **735120** | 650 414,5 | ALM |

# SEAT (.../...)

## LEON II (2005>2010) (.../...)

| | | | CC | | | AC | | | OE | Valeo | DIM. | TECH |
|---|---|---|---|---|---|---|---|---|---|---|---|---|
| 1.9 TDi 105 | 1P1/112/212 | D | 1896 | BKC,BXE | M | +/- | TSW | 07/05 ▸ 05/10 | 1K0121253AA | **732872** | 650 414,5 | ALM |
| 1.9 TDi 90 | 1P1/1G2/2G2 | D | 1896 | BXF | M | | TSW | 06/07 ▸ 05/10 | 1K0121253AA | **732872** | 650 414,5 | ALM |
| 2.0 TDi 136 16V<br>2.0 TDi 140 16V | 1P1/131/231/241 | D | 1968 | AZV,BKD | M | +/- | Air Seal | 07/05 ▸ 05/10 | 1K0121251N | **734333** | 650 454,3 | ALB |
| 2.0 TDi 170 16V | 1P1561 | D | 1968 | BMN | M | +/- | Air Seal | 02/06 ▸ 03/09 | 1K0121251AB | **734333** | 650 454,3 | ALB |
| 2.0 TDi 170 16V | 1P15N1 | D | 1968 | CEGA/F | M | | Air Seal | 03/09 ▸ 05/10 | 1K0121251AB | **734333** | 650 454,3 | ALB |
| 2.0 TDi 136 16V<br>2.0 TDi 140 16V | 1P1/133/233/243 | D | 1968 | AZV,BKD | A | +/- | Air Seal | 07/05 ▸ 05/10 | 1K0121251N | **734333** | 650 454,3 | ALB |

## MALAGA

| | | | | | | | | | | | | |
|---|---|---|---|---|---|---|---|---|---|---|---|---|
| 1200 | | E | 1193 | 021A-1000 | M | - | | 05/85 ▸ 12/93 | SE021117002A | **883958** | 600 322 | ALM |
| 1500 | | E | 1461 | 021A-2000 | M | - | | 05/85 ▸ 12/93 | SE021117002A | **883958** | 600 322 | ALM |
| 1500 | | E | 1461 | 021A | M | - | | 10/87 ▸ 12/93 | SE021117002D | **730542** | 601 322 | ALM |
| 1700 D | | D | 1714 | 022A-5000 | M | - | | 05/85 ▸ 12/93 | SE021117002D | **730542** | 601 322 | ALM |

## MARBELLA

| | | | | | | | | | | | | |
|---|---|---|---|---|---|---|---|---|---|---|---|---|
| 850 | | E | 843 | 08NCA | M | - | TSW | 11/86 ▸ 1991 | SE141117000A | **883053** | 310 359 | ALM |
| 900 | | E | 899 | 1170A | M | - | TSW | 10/96 ▸ 05/98 | SE141117000A | **883053** | 310 359 | ALM |
| 900 | | E | 903 | 09NCA,09NCB | M | - | TSW | 11/86 ▸ 09/96 | SE141117000A | **883053** | 310 359 | ALM |

## RONDA

| | | | | | | | | | | | | |
|---|---|---|---|---|---|---|---|---|---|---|---|---|
| 1200 | TC10 ; TC20 ; TC60 ; TC70 ; TP05 ; TP18<br>TP21 ; TC0/0 | E | 1193 | 021A-1000,SEAT4 | M | - | | 10/84 ▸ 06/87 | SE021117002A | **883958** | 600 322 | ALM |
| 1500 | TP76 ; TP90 | E | 1461 | 021A-2000,021C-2000 | M | - | | 10/84 ▸ 06/87 | SE021117002A | **883958** | 600 322 | ALM |
| 1700 D | TD69 ; TD77 | D | 1714 | SEAT10 | M | - | | 10/84 ▸ 06/85 | SE021117002A | **883958** | 600 322 | ALM |
| 1700 D | TS60 | D | 1714 | SEAT10 | M | - | | 07/85 ▸ 1986 | SE021117002D | **730542** | 601 322 | ALM |

## TOLEDO (91>98)

| | | | | | | | | | | | | |
|---|---|---|---|---|---|---|---|---|---|---|---|---|
| 1.6 i | 1L2/2B1/3B1/8B1 | E | 1595 | 1F | M | + | TSW | 02/91 ▸ 09/95 | 1L0121253 | **730947** | 525 322 | ALM |
| 1.6 i | 1L2/2B1/2Q1/2X1/3B1/3Q1/3X1/5X1/8B1/8Q1/8X1 | E | 1595 | 1F | M | + | TSW | 10/93 ▸ 09/98 | 1L0121253F | **731269** | 675 322 | ALM |
| 1.6 i | 1L2/2B1/2Q1/2X1/3B1/3Q1/3X1/5X1/8B1/8Q1/8X1 | E | 1595 | 1F | M | + | TSW | 09/95 ▸ 09/98 | 1L0121253G | **731270** | 675 322 | ALM |
| 1.6 i | 1L2/2Q1/2X1/3Q1/3X1/5X1/8Q1/8X1 | E | 1595 | 1F | M | + | TSW | 10/95 ▸ 09/98 | 1L0121253C | **731269** | 675 322 | ALM |
| 1.6,1.6 i | 1L2/2A1/2B1/2Q1/2X1<br>3A1/3B1/3Q1/3X1/5X1/8A1/8B1/8Q1/8X1 | E | 1595 | 1F,ABN,EZ | M | - | TSW | 02/91 ▸ 09/98 | 1L0121253B | **883727** | 525 322 | ALM |
| 1.6 i<br>▸ 1L-ZD309350 | 1L2/2B1/3B1/8B1 | E | 1595 | 1F | M | + | TSW | 02/91 ▸ 10/93 | 1L0121253E | **731271** | 675 322 | ALM |
| 1.6 i | 1L2/2W1/311/3W1/511/5W1/8W1 | E | 1598 | AFT,AKS | M | + | TSW | 09/96 ▸ 09/98 | 1L0121251C | **731270** | 675 322 | ALM |
| 1.6 i | 1L2/311/511 | E | 1598 | AKS | M | + | TSW | 11/97 ▸ 09/98 | 1L0121253G | **731270** | 675 322 | ALM |
| 1.6 i | 1L2/2W1/311/3W1/511/5W1/8W1 | E | 1598 | AFT,AKS | M | - | TSW | 09/96 ▸ 09/98 | 1L0121253R | **883727** | 525 322 | ALM |
| 1.8 i<br>1L-ZD309351, ZD309351 ▸ | 1L2/2C1/2C2/2J1/2P1/3C1/3C2/3J1/3P1/3P2/8C1<br>8C2/8J1/8P1/8P2 | E | 1781 | ABS,ADZ,RP | M | + | TSW | 10/93 ▸ 09/98 | 1L0121253C | **731269** | 675 322 | ALM |
| 1.8 i | 1L2/2C1/2C2/2J1/2P1/3C1/3C2/3J1/3P1/3P2/8C1<br>8C2/8J1/8P1/8P2 | E | 1781 | ABS,ADZ,RP | M | + | TSW | 10/93 ▸ 09/98 | 1L0121253F | **731269** | 675 322 | ALM |
| 1.8 i,1.8 i 16V | 1L2/2C1/2C2/2J1/2P1<br>3C1/3C2/3J1/3P1/3P2/5E1/5F1/8C1/8C2/8J1/8P1<br>8P2 | E | 1781 | ABS,ADZ,KR,PL,RP | M | - | TSW | 02/91 ▸ 09/98 | 1L0121251 | **730370** | 675 322 | ALM |
| 1.8 i<br>▸ 1L-ZD309350 | 1L2/2C1/2C2/2J1/2P1/3C1/3C2/3J1/3P1/8C1/8C2<br>8J1/8P1 | E | 1781 | ADZ,RP | M | + | TSW | 02/91 ▸ 09/98 | 1L0121253E | **731271** | 675 322 | ALM |
| 1.8 i<br>▸ ZD309350 | 1L2/2C1/2C2/2J1/3C1/3C2/3J1/8C1/8C2/8J1 | E | 1781 | ABS,RP | M | + | TSW | 02/91 ▸ 12/93 | 1L0121253 | **730947** | 525 322 | ALM |
| 2.0 i<br>1L-ZD309351 ▸ | 1L2/3D1/5D1/8D1 | E | 1984 | 2E | M | + | TSW | 11/93 ▸ 09/95 | 1L0121253F | **731269** | 675 322 | ALM |
| 2.0 i<br>ZD309351 ▸ | 1L2/3D1/5D1/8D1 | E | 1984 | 2E | M | + | TSW | 12/93 ▸ 09/95 | 1L0121253C | **731269** | 675 322 | ALM |
| 2.0 i,2.0 i 16V | 1L2/3T1/5M1/5M2/5T1<br>6M1/6M2/8T1 | E | 1984 | ABF,AGG | M | + | TSW | 03/94 ▸ 09/98 | 1L0121253G | **731270** | 675 322 | ALM |
| 2.0 i 16V | 1L2/5M1/5M2/6M1/6M2 | E | 1984 | ABF | M | + | TSW | 03/94 ▸ 09/98 | 1L0121251C | **731270** | 675 322 | ALM |
| 2.0 i | 1L2/2K1/3D1/3K1/3T1/5D1/5K1/5T1/8D1/8K1/8T1 | E | 1984 | 2E,AGG | M | - | TSW | 02/91 ▸ 09/98 | 1L0121251 | **730370** | 675 322 | ALM |
| 2.0 i 16V | 1L2/5M1/5M2/6M1/6M2 | E | 1984 | ABF | M | - | TSW | 03/94 ▸ 09/98 | 1L0121253E | **731271** | 675 322 | ALM |
| 2.0 i 16V | 1L2/5M1/5M2/6M1/6M2 | E | 1984 | ABF | M | | TSW | 03/94 ▸ 09/98 | 1L0121253 | **730947** | 525 322 | ALM |
| 2.0 i<br>ZD309351 ▸ | 1L2/3D2/5D2/5K2/8D2 | E | 1984 | 2E | A | + | TSW | 02/91 ▸ 09/95 | 1L0121251C | **731270** | 675 322 | ALM |
| 2.0 i<br>1L-ZD309351 ▸ | 1L2/3D2/3T2/5D2/5K2/5T2/8D2/8T2 | E | 1984 | 2E,AGG | A | + | TSW | 11/93 ▸ 09/98 | 1L0121253G | **731270** | 675 322 | ALM |
| 2.0 i | 1L2/3D2/5D2/5K2/8D2 | E | 1984 | 2E | A | - | TSW | 02/91 ▸ 09/95 | 1L0121253 | **730947** | 525 322 | ALM |
| 2.0 i | 1L2/3T2/5T2/8T2 | E | 1984 | AGG | A | - | TSW | 10/95 ▸ 09/98 | 1L0121253E | **731271** | 675 322 | ALM |
| 2.0 i | 1L2/3T2/5T2/8T2 | E | 1984 | AGG | A | | TSW | 10/95 ▸ 09/98 | 1L0121253 | **730947** | 525 322 | ALM |

Radiator Radiateur Motorkühler Radiatore di raffreddamento Radiator Radyatör Radiador Радиатор vízhűtő Vodní chladič Radiator Ψυγείο



• **New** Nouveau **Nuevo** Novo **Nuovo** Nieuw **Neu** Nowość **Yeni** Новый Νέο **Nový**

## TOLEDO (91>98) (.../...)

| | | | | | | | | | | | | |
|---|---|---|---|---|---|---|---|---|---|---|---|---|
| 2.0 i<br>▸ 1L-ZD309350 | 1L2/2K1/3D1/3K1/5D1/5K1/8D1 | E | 1984 | 2E | M | + | TSW | 02/91 ▸ 11/93 | 1L0121253E | **731271** | 675 322 | ALM |
| 2.0 i<br>▸ 1L-ZD309350 | 1L2/3D2/5D2/5K2/8D2 | E | 1984 | 2E | A | +/- | TSW | 02/91 ▸ 11/93 | 1L0121253E | **731271** | 675 322 | ALM |
| 2.0 i<br>▸ ZD309350 | 1L2/2K1/3D1/3K1/3T1/5D1/5K1/5T1/8D1/8K1/8T1 | E | 1984 | 2E,AGG | M | + | TSW | 02/91 ▸ 09/98 | 1L0121253 | **730947** | 525 322 | ALM |
| 2.0 i<br>▸ ZD309350 | 1L2/3D2/5D2/5K2/8D2 | E | 1984 | 2E | A | + | TSW | 02/91 ▸ 12/93 | 1L0121253 | **730947** | 525 322 | ALM |
| 1.9 D,1.9 TD | 1L2/2H1/2L1/2S1/3G1<br>3G2/3H1/3L1/3N1/3S1/8G1/8G2/8H1/8L1/8N1/8S1 | D | 1896 | 1Y,AAZ | M | + | TSW | 02/91 ▸ 09/98 | 1L0121253C | **731269** | 675 322 | ALM |
| 1.9 D,1.9 TD<br>▸ 1L-ZD304851 ▸ | 1L2/2H1/2L1/2S1/3G1<br>3G2/3H1/3L1/3N1/3S1/8G1/8G2/8H1/8L1/8N1/8S1 | D | 1896 | 1Y,AAZ | M | + | TSW | 08/92 ▸ 09/98 | 1L0121253F | **731269** | 675 322 | ALM |
| 1.9 TDi | 1L2/3R1/3Z1/5R1/5Z1<br>8R1/8Z1 | D | 1896 | 1Z,AFN,AHU | M | + | TSW | 04/95 ▸ 09/98 | 1L0121251E | **731270** | 675 322 | ALM |
| 1.9 TD | 1L2/3G1/3G2/3N1/8G1<br>8G2/8N1 | D | 1896 | AAZ | M | - | TSW | 02/91 ▸ 04/97 | 1L0121253E | **731271** | 675 322 | ALM |
| 1.9 D | 1L2/2H1/2L1/2S1/3H1/3L1/3S1/8H1/8L1/8S1 | D | 1896 | 1Y | M | - | TSW | 02/91 ▸ 09/98 | 1L0121251A | **731271** | 675 322 | ALM |
| 1.9 TDi | 1L2/3R1/3Z1/5R1/5Z1<br>8R1/8Z1 | D | 1896 | 1Z,AFN,AHU | M | - | TSW | 04/95 ▸ 09/98 | 1L0121253P | **883727** | 525 322 | ALM |
| 1.9 TD | 1L2/3G1/3G2/3N1/8G1<br>8G2/8N1 | D | 1896 | AAZ | M | | TSW | 02/91 ▸ 04/97 | 1L0121253 | **730947** | 525 322 | ALM |

## TOLEDO (98>2004)

| | | | | | | | | | | | | |
|---|---|---|---|---|---|---|---|---|---|---|---|---|
| 1.4 i 16V | 1M2/2C4/2D4/3C4/3D4 | E | 1390 | AHW,AXP | M | + | TSW | 01/00 ▸ 05/02 | 1J0121253P | **731606** | 414,5 650 | ALM |
| 1.4 i 16V | 1M2/2C4/2D4/3C4/3D4 | E | 1390 | AHW,AXP | M | + | TSW | 01/00 ▸ 05/02 | 1H0121253P | **731265** | 628 377,5 | ALM |
| 1.4 i 16V | 1M2/2C4/2D4/3C4/3D4 | E | 1390 | AHW,AXP | M | - | TSW | 01/00 ▸ 05/02 | 1J0121253G | •**736083** | 430 414 | ALM |
| 1.4 i 16V | 1M2/2C4/2D4/3C4/3D4 | E | 1390 | AHW,AXP | M | - | TSW | 01/00 ▸ 05/02 | 1J0121253G | **731607** | 430 414 | ALM |
| 1.6 i,1.6 i 16V | 1M2/3J4/3KC/5KC/8J4 | E | 1595 | AKL,AUS,AZD | M | + | TSW | 10/98 ▸ | 1J0121253P | **731606** | 414,5 650 | ALM |
| 1.6 i,1.6 i 16V | 1M2/2KC/3J4/3KC/5KC<br>8J4/8KC | E | 1595 | AKL,AUS,AZD,BCB | M | + | TSW | 10/98 ▸ 07/04 | 1J0121253AD | **731606** | 414,5 650 | ALM |
| 1.6 i 16V | 1M2/2KC/3KC/5KC/8KC | E | 1595 | AUS | M | + | TSW | 06/00 ▸ 04/01 | 1H0121253P | **731265** | 628 377,5 | ALM |
| 1.6 i,1.6 i 16V | 1M2/2J4/2KC/3J4/3KC<br>5J4/8J4/8KC | E | 1595 | AKL,AUS,AZD | M | - | TSW | 10/98 ▸ 05/02 | 1J0121253P | **731606** | 414,5 650 | ALM |
| 1.6 i,1.6 i 16V | 1M2/2J4/2KC/3J4/3KC<br>5J4/8KC | E | 1595 | AKL,AUS,AZD | M | - | TSW | 10/98 ▸ 05/02 | 1J0121253AD | **731606** | 414,5 650 | ALM |
| 1.6 i,1.6 i 16V | 1M2/2J4/2KC/3J4/3KC<br>5J4/5KC/8J4/8KC | E | 1595 | AKL,AUS,AZD,BCB | M | - | TSW | 10/98 ▸ 07/04 | 1J0121253N | **732175** | 650 414,5 | ALM |
| 1.6 i | 1M2/2J4/3J4/8J4 | E | 1595 | AKL | M | | TSW | 02/99 ▸ 07/04 | 1J0121253P | **731606** | 414,5 650 | ALM |
| 1.6 i | 1M2/3H3/5H3/8H3 | E | 1595 | AEH | A | + | TSW | 11/98 ▸ | 1J0121253P | **731606** | 414,5 650 | ALM |
| 1.6 i | 1M2/3H3/5H3/8H3 | E | 1595 | AEH | A | + | TSW | 11/98 ▸ 07/04 | 1J0121253AD | **731606** | 414,5 650 | ALM |
| 1.6 i | 1M2/3H3/5H3/8H3 | E | 1595 | AEH | A | - | TSW | 11/98 ▸ | 1J0121253P | **731606** | 414,5 650 | ALM |
| 1.6 i | 1M2/3H3/5H3/8H3 | E | 1595 | AEH | A | - | TSW | 11/98 ▸ 07/04 | 1J0121253N | **732175** | 650 414,5 | ALM |
| 1.6 i | 1M2/3H3/5H3/8H3 | E | 1595 | AEH | A | - | TSW | 03/99 ▸ 07/04 | 1J0121253AD | **731606** | 414,5 650 | ALM |
| 1.6 i | 1M2/3H3/8H3 | E | 1595 | AEH | A | | TSW | 02/00 ▸ 07/04 | 1J0121253P | **731606** | 414,5 650 | ALM |
| 1.8 i 20V | 1M2/5P4/8P4/8Q4 | E | 1781 | AGN,APG | M | + | TSW | 10/98 ▸ | 1J0121253P | **731606** | 414,5 650 | ALM |
| 1.8 i 20V | 1M2/3P4/3Q4/536/5P4<br>836/8P4/8Q4 | E | 1781 | AGN,APG,AUQ | M | + | TSW | 05/99 ▸ 07/04 | 1J0121253AD | **731606** | 414,5 650 | ALM |
| 1.8 i 20V | 1M2/5P4/5Q4/8P4/8Q4 | E | 1781 | AGN,APG | M | - | TSW | 10/98 ▸ | 1J0121253P | **731606** | 414,5 650 | ALM |
| 1.8 i 20V | 1M2/5P4/5Q4/8P4/8Q4 | E | 1781 | AGN,APG | M | - | TSW | 10/98 ▸ 07/04 | 1J0121253AD | **731606** | 414,5 650 | ALM |
| 1.8 i 20V | 1M2/3P4/3Q4/5P4/5Q4<br>8P4/8Q4 | E | 1781 | AGN,APG | M | - | TSW | 10/98 ▸ 07/04 | 1J0121253N | **732175** | 650 414,5 | ALM |
| 1.8 i 20V | 1M2/3P4/3Q4/8P4/8Q4 | E | 1781 | AGN,APG | M | | TSW | 09/00 ▸ 07/04 | 1J0121253P | **731606** | 414,5 650 | ALM |
| 1.8 i 20V | 1M2/3N3/3Q3/5N3/8N3 | E | 1781 | AGN,APG | A | + | TSW | 11/98 ▸ 07/04 | 1J0121253AD | **731606** | 414,5 650 | ALM |
| 1.8 i 20V | 1M2/5N3/8N3 | E | 1781 | AGN | A | + | TSW | 11/98 ▸ | 1J0121253P | **731606** | 414,5 650 | ALM |
| 1.8 i 20V | 1M2/5N3/8N3 | E | 1781 | AGN | A | - | TSW | 11/98 ▸ 02/00 | 1J0121253AD | **731606** | 414,5 650 | ALM |
| 1.8 i 20V | 1M2/3N3/3Q3/5N3/5Q3<br>8N3/8Q3 | E | 1781 | AGN,APG | A | - | TSW | 11/98 ▸ 07/04 | 1J0121253N | **732175** | 650 414,5 | ALM |
| 1.8 i 20V | 1M2/3N3/3Q3/5Q3/8N3<br>8Q3 | E | 1781 | AGN,APG | A | | TSW | 03/00 ▸ 07/04 | 1J0121253P | **731606** | 414,5 650 | ALM |
| 2.3 i VR5 20V | 1M2/5T4/6T4 | E | 2324 | AGZ | M | +/- | TSW | 10/98 ▸ 09/00 | 1J0121253P | **731606** | 414,5 650 | ALM |
| 2.3 i VR5 20V<br>▸ 1-028 001 ▸ | 1M2/5T4/6T4 | E | 2324 | AGZ | M | +/- | TSW | 10/98 ▸ 11/00 | 1J0121253AD | **731606** | 414,5 650 | ALM |
| 2.3 i VR5 20V | 1M2/5U4/6U4/8U4 | E | 2324 | AQN | M | +/- | TSW | 09/00 ▸ 11/03 | 1J0121253S | **732427** | 648,6 414 | ALB |
| 2.3 i VR5 20V<br>▸ 1-028 000 | 1M2/5T4/6T4 | E | 2324 | AGZ | M | | TSW | 05/99 ▸ 09/00 | 1J0121253P | **731606** | 414,5 650 | ALM |
| 1.9 SDi | 1M1/204/304 | D | 1896 | AQM | M | +/- | TSW | 06/00 ▸ 04/01 | 1J0121253N | **732175** | 650 414,5 | ALM |
| 1.9 SDi | 1M1/204/304 | D | 1896 | AQM | M | +/- | TSW | 06/00 ▸ 04/01 | 1J0121253AD | **731606** | 414,5 650 | ALM |
| 1.9 TDi | 1M2/566/666/866 | D | 1896 | ARL | M | +/- | TSW | 10/00 ▸ 07/04 | 1J0121253AC | **732867** | 648,6 414,5 | ALB |

# SEAT (.../...)

## TOLEDO (98>2004) (.../...)

| | | | CC | | | AC | | | OE | Valeo | DIM. | TECH |
|---|---|---|---|---|---|---|---|---|---|---|---|---|
| 1.9 TDi | 1M2/2B4/324/344/374 3B4/524/574/824/844/874/8B4 | D | 1896 | AGR,AHF,ALH,ASV | M | + | TSW | 10/98 ▸ | 1J0121253P | 731606 | 414,5 650 | ALM |
| 1.9 TDi | 1M2/2B4/324/344/374 3B4/524/574/824/844/874/8B4 | D | 1896 | AGR,AHF,ALH,ASV | M | + | TSW | 10/98 ▸ 07/04 | 1J0121253AD | 731606 | 414,5 650 | ALM |
| 1.9 TDi | 1M2/224/244/274/2B4 324/344/374/3B4/524/574/824/846/874/8B4 | D | 1896 | AGR,AHF,ALH,ASV,ASZ | M | - | TSW | 10/98 ▸ 07/04 | 1J0121253AD | 731606 | 414,5 650 | ALM |
| 1.9 TDi | 1M2/224/244/274/2B4 324/344/374/3B4/524/574/824/844/846/874/8B4 | D | 1896 | AGR,AHF,ALH,ASV,ASZ | M | - | TSW | 10/98 ▸ 07/04 | 1J0121253N | 732175 | 650 414,5 | ALM |
| 1.9 TDi | 1M2/224/244/274/2B4 324/344/374/3B4/524/574/824/846/874/8B4 | D | 1896 | AGR,AHF,ALH,ASV,ASZ | M | - | TSW | 10/98 ▸ | 1J0121253P | 731606 | 414,5 650 | ALM |
| 1.9 TDi | 1M2/224/244/2B4/324 344/374/3B4/524/574/824/846/874/8B4 | D | 1896 | AGR,AHF,ALH,ASV,ASZ | M | | TSW | 05/99 ▸ 07/04 | 1J0121253P | 731606 | 414,5 650 | ALM |
| 1.9 TDi | 1M2244 | D | 1896 | AGR | M | | TSW | 05/99 ▸ 08/00 | 1J0121253AD | 731606 | 414,5 650 | ALM |

## TOLEDO (2004>)

| | | | | | | | | | | | | |
|---|---|---|---|---|---|---|---|---|---|---|---|---|
| 1.4 SRE | 5P2/0E2/1E2 | E | 1390 | BXW | M | +/- | TSW | 05/06 ▸ 06/07 | 1K0121251P | 734332 | 640 414,5 | ALM |
| 1.4 FSi | 5P2/1H1/2H1 | E | 1390 | CAXC | M | +/- | TSW | 11/07 ▸ | 1K0121253AP | 732872 | 650 414,5 | ALM |
| 1.4 SRE | 5P2/0E2/1E2 | E | 1390 | BXW | M | + | TSW | 05/06 ▸ 06/07 | 1K0121251AR | 735120 | 650 414,5 | ALM |
| 1.4 FSi | 5P2/1H1/2H1 | E | 1390 | CAXC | M | + | TSW | 11/07 ▸ | 1K0121253H | 732872 | 650 414,5 | ALM |
| 1.6 i | 5P2/1D2/2D2 | E | 1595 | BGU,BSE | M | +/- | TSW | 09/04 ▸ | 1K0121251P | 734332 | 640 414,5 | ALM |
| 1.6 i | 5P2/1D2/2D2 | E | 1595 | BGU | M | + | TSW | 09/04 ▸ | 1K0121251E | 734335 | 640 414,5 | ALM |
| 1.6 i | 5P2/1D2/2D2 | E | 1595 | BGU | M | + | TSW | 09/04 ▸ 05/05 | 1K0121251AR | 735120 | 650 414,5 | ALM |
| 1.6 i | 5P2/1D2/2D2 | E | 1595 | BSF | M | + | TSW | 05/05 ▸ | 1K0121251P | 734332 | 640 414,5 | ALM |
| 1.6 i | 5P20D2 | E | 1595 | BSE,BSF | M | - | TSW | 06/06 ▸ | 1K0121251P | 734332 | 640 414,5 | ALM |
| 2.0 TFSi 16V | 5P22P1 | E | 1984 | BWA | M | +/- | Air Seal | 05/06 ▸ | 1K0121251AB | 734333 | 650 454,3 | ALB |
| 2.0 FSi 16V | 5P2/1M1/2M1 | E | 1984 | BLR,BLY,BVY,BVZ | M | + | TSW | 09/04 ▸ | 1K0121251AR | 735120 | 650 414,5 | ALM |
| 2.0 FSi 16V | 5P22M1 | E | 1984 | BLR,BLY | M | + | TSW | 09/04 ▸ | 1K0121251E | 734335 | 640 414,5 | ALM |
| 2.0 TFSi 16V | 5P22P1 | E | 1984 | BWA | M | | TSW | 05/06 ▸ | 1K0121251AR | 735120 | 650 414,5 | ALM |
| 2.0 FSi 16V | 5P21M3 | E | 1984 | BVZ | A | +/- | TSW | 11/05 ▸ 09/06 | 1K0121251AR | 735120 | 650 414,5 | ALM |
| 2.0 TFSi 16V | 5P22P3 | E | 1984 | BWA | A | +/- | Air Seal | 05/06 ▸ | 1K0121251AB | 734333 | 650 454,3 | ALB |
| 2.0 FSi 16V | 5P2/1M3/2M3 | E | 1984 | BLR,BLY,BVY,BVZ | A | + | TSW | 09/04 ▸ | 1K0121251AR | 735120 | 650 414,5 | ALM |
| 2.0 TFSi 16V | 5P22P3 | E | 1984 | BWA | A | | TSW | 05/06 ▸ | 1K0121251AR | 735120 | 650 414,5 | ALM |
| 1.9 TDi | 5P2/012/112/212 | D | 1896 | BJB,BKC,BXE | M | +/- | TSW | 09/04 ▸ | 1K0121253AA | 732872 | 650 414,5 | ALM |
| 1.9 TDi | 5P2/022/122/222 | D | 1896 | BLS | M | | TSW | 10/05 ▸ | 1K0121253AA | 732872 | 650 414,5 | ALM |
| 1.9 TDi | 5P2/023/123/223 | D | 1896 | BLS | A | | TSW | 06/07 ▸ | 1K0121253AA | 732872 | 650 414,5 | ALM |
| 2.0 TDi 16V | 5P2/031/131/141/231 241 | D | 1968 | AZV,BKD | M | +/- | Air Seal | 09/04 ▸ | 1K0121251N | 734333 | 650 454,3 | ALB |
| 2.0 TDi PD 16V | 5P2/261/271 | D | 1968 | BMN | M | +/- | Air Seal | 01/06 ▸ | 1K0121251AB | 734333 | 650 454,3 | ALB |
| 2.0 TDi | 5P2/071/171/271 | D | 1968 | BMM/F | M | +/- | | 01/06 ▸ | 1K0121251AL | | 650 451 | ALM |
| 2.0 TDi,2.0 TDi PD 16V | 5P2/071/171/261/271 | D | 1968 | BMM/F,BMN | M | | Air Seal | 01/06 ▸ | 1K0121251N | 734333 | 650 454,3 | ALB |
| 2.0 TDi 16V | 5P2/033/133/143/233 243 | D | 1968 | AZV,BKD | A | +/- | Air Seal | 09/04 ▸ | 1K0121251N | 734333 | 650 454,3 | ALB |
| 2.0 TDi 16V 2.0 TDi PD 16V | 5P2/073/173/273 | D | 1968 | BMN | A | +/- | Air Seal | 01/06 ▸ | 1K0121251AB | 734333 | 650 454,3 | ALB |
| 2.0 TDi | 5P2/173/273 | D | 1968 | BMM/F | A | +/- | | 01/06 ▸ 05/06 | 1K0121251AL | | 650 451 | ALM |
| 2.0 TDi,2.0 TDi 16V 2.0 TDi PD 16V | 5P2/073/133/173/233 273 | D | 1968 | AZV,BMM/F,BMN | A | | Air Seal | 05/05 ▸ | 1K0121251N | 734333 | 650 454,3 | ALB |

# SEAT

## INCA

| | | | | | | | | | | | | |
|---|---|---|---|---|---|---|---|---|---|---|---|---|
| 1.4 i | 6K9/1A1/1U1/1V1/2A1/2U1/2U4/2V1/3A1/3U1/3U4 3V1/4A1/4U1/4V1 | E | 1390 | AEX,AKV,APQ | M | +/- | TSW | 11/95 ▸ 06/03 | 6K0121253K | 730947 | 525 322 | ALM |
| 1.4 i | 6K9/1D6/2D6/3D6/4D6 | E | 1390 | AUD | M | +/- | TSW | 09/00 ▸ 06/03 | 6K0121253S | 730948 | 525 322 | ALM |
| 1.4 i,1.4 i 16V | 6K9/1D6/1E6/2D6/2E6 3D6/3E6/4D6/4E6 | E | 1390 | AUA,AUD | M | | TSW | 09/00 ▸ 06/03 | 6K0121253AS | 732710 | 628 377,5 | ALM |
| 1.4 i 16V | 6K9/1E6/2E6/3E6/4E6 | E | 1390 | AUA | M | | TSW | 09/00 ▸ 06/03 | 6K0121253S | 730948 | 525 322 | ALM |
| 1.6 i | 6K9/1D2/2D2/2D3/3D2/3D3/4D2 | E | 1595 | 1F | M | + | TSW | 11/95 ▸ 05/97 | 6K0121253M | 731265 | 628 377,5 | ALM |
| 1.6 i | 6K9/1D2/2D2/2D3/3D2/3D3/4D2 | E | 1595 | 1F | M | - | TSW | 11/95 ▸ 05/97 | 6K0121253S | 730948 | 525 322 | ALM |
| 1.6 i | 6K9/152/252/253/352/353/452 | E | 1598 | AEE | M | +/- | TSW | 06/97 ▸ 09/00 | 6K0121253K | 730947 | 525 322 | ALM |
| 1.7 SDi | 6K9/121/221/321/421 | D | 1714 | AHB | M | + | TSW | 07/96 ▸ 09/00 | 6K0121253AA | 731267 | 628 377,5 | ALM |
| 1.7 SDi | 6K9/121/221/321/421 | D | 1714 | AHB | M | + | TSW | 07/96 ▸ 09/00 | 1HM121253D | 731268 | 628 377,5 | ALM |
| 1.7 SDi | 6K9/121/221/321/421 | D | 1714 | AHB | M | - | TSW | 07/96 ▸ 09/00 | 6K0121253K | 730947 | 525 322 | ALM |
| 1.9 SDi | 6K9/1Z1/2Z1/3Z1/4Z1 | D | 1896 | AEY | M | + | TSW | 11/95 ▸ 09/00 | 6K0121253AA | 731267 | 628 377,5 | ALM |
| 1.9 D | 6K9/1Y1/2Y1/3Y1/4Y1 | D | 1896 | 1Y | M | + | TSW | 11/95 ▸ | 6K0121253M | 731265 | 628 377,5 | ALM |
| 1.9 SDi | 6K9/1Z1/2Z1/3Z1/4Z1 | D | 1896 | AEY | M | + | TSW | 11/95 ▸ 09/00 | 1HM121253D | 731268 | 628 377,5 | ALM |
| 1.9 D | 6K9/1Y1/2Y1/3Y1/4Y1 | D | 1896 | 1Y | M | + | TSW | 11/95 ▸ 06/03 | 1H0121253P | 731265 | 628 377,5 | ALM |
| 1.9 SDi | 6K9/1Z1/2Z1/3Z1/4Z1 | D | 1896 | AEY | M | - | TSW | 11/95 ▸ 09/00 | 6K0121253K | 730947 | 525 322 | ALM |

Radiator Radiateur Motorkühler Radiatore di raffreddamento Radiator Radyatör Radiador Радиатор vízhűtő Vodní chladič Radiator Ψυγείο



• **New** Nouveau **Nuevo** Novo **Nuovo** Nieuw **Neu** Nowość **Yeni** Новый Νέο **Nový**

| Type Ctr. | | CC | | AC | | | OE | Valeo | DIM. | TECH |
|---|---|---|---|---|---|---|---|---|---|---|
| **SEAT (.../...)** | | | | | | | | | | |
| **INCA (.../...)** | | | | | | | | | | |
| 1.9 D 6K9/1Y1/2Y1/3Y1/4Y1 X-006 001 ▸ | D | 1896 | 1Y | M | - | TSW | 08/98 ▸ 06/03 | 6K0121253T | **731264** | 628 322 | ALM |
| 1.9 SDi 6K9/136/236/336/436 | D | 1896 | AYQ | M | | TSW | 09/00 ▸ 06/03 | 6K0121253AS | **732710** | 628 377,5 | ALM |
| 1.9 SDi 6K9/136/236/336/436 | D | 1896 | AYQ | M | | TSW | 09/00 ▸ 06/03 | 6K0121253AG | **732698** | 647 377 | ALM |
| 1.9 D 6K9/1Y1/2Y1/3Y1/4Y1 | D | 1896 | 1Y | M | - | TSW | 11/95 ▸ 08/98 | 6K0121253G | **731266** | 628 322 | ALM |
| **TERRA** | | | | | | | | | | |
| 903 CT0/0/1/2/3 | E | 903 | 09NCA | M | - | TSW | 02/87 ▸ 07/88 | SE141117000A | **883053** | 310 359 | ALM |
| 903 CS0/4/5/6/7 ; CS1/0/6/7 ; CS2/0/5 ; CS40 CS50 ; CS3/0/5 ; CT0/4/5/6/7/9 ; CT1/0/6/7 CT2/0/5 ; CT3/0/5 ; CT4/0/5 ; CT65 ; CT75 CT5/0/5 | E | 903 | 09NCA,09NCB | M | - | TSW | 08/88 ▸ 12/96 | 867121253F | **883818** | 380 322 | ALM |
| 1.3 D CD0/0/1 | D | 1272 | MN | M | - | | 08/89 ▸ 1991 | SE029117000A | | 522 310 | CBS |
| 1.3 D CD0/0/1 | D | 1272 | MN | M | | TSW | 08/89 ▸ 1991 | SE141117000A | **883053** | 310 359 | ALM |
| 1.4 D CD15 ; CD0/2/3 ; CD30 ; CE02 ; CE15 ; CE25 CD2/0/5 | D | 1391 | 1W | M | - | | 08/89 ▸ 12/96 | SE029117000A | | 522 310 | CBS |
| 1.4 D CD15 ; CD0/2/3 ; CD30 ; CE02 ; CE15 ; CE25 CD2/0/5 | D | 1391 | 1W | M | | TSW | 08/89 ▸ 12/96 | SE141117000A | **883053** | 310 359 | ALM |
| **SKODA** | | | | | | | | | | |
| **FABIA (99>2004)** | | | | | | | | | | |
| 1.0 i 6Y2/0A4/1A4 | E | 997 | AQV,ARV | M | +/- | TSW | 10/00 ▸ 08/02 | 6Q0121253R | **732864** | 632 414,5 | ALM |
| 1.0 i 6Y2/0A4/1A4 | E | 997 | AQV,ARV | M | + | TSW | 10/00 ▸ 08/02 | 6Q0121253Q | **732862** | 632 414,5 | ALM |
| 1.0 i 6Y2/0A4/1A4 | E | 997 | AQV,ARV | M | + | TSW | 10/00 ▸ 08/02 | 6Q0121253L | **732864** | 632 414,5 | ALM |
| 1.0 i 6Y2/0A4/1A4 1-223 281 ▸ | E | 997 | AQV,ARV | M | | MODULE | 10/00 ▸ 08/02 | 6Q0121201BT | **733062** | 430 414,5 | ALM |
| 1.0 i 6Y2/0A4/1A4 | E | 997 | AQV,ARV | M | | TSW | 10/00 ▸ 08/02 | 6Q0121253AE | **732864** | 632 414,5 | ALM |
| 1.0 i 6Y20A4 | E | 997 | AQV | M | | TSW | 10/00 ▸ 08/02 | 6Q0121253L | **732864** | 632 414,5 | ALM |
| 1.0 i 6Y2/0A4/1A4 ▸ 1-223 280 | E | 997 | AQV,ARV | M | - | TSW | 10/00 ▸ 08/02 | 6Q0121253AE | **732864** | 632 414,5 | ALM |
| 1.2 i,1.2 i 6V 6Y2/0C4/1C4/1E4/2C4 2E4/3E4 ; 6Y3/1C4/1E4/2C4/2E4/3E4 ; 6Y5/1C4 1E4/2C4/2E4/3E4/PC4/PE4 | E | 1198 | AWY,AZQ,BMD | M | +/- | TSW | 07/01 ▸ 07/04 | 6Q0121253R | **732864** | 632 414,5 | ALM |
| 1.2 i 6Y2/0C4/1E4/2C4/2E4/3E4 ; 6Y3/1C4/1E4/2C4 2E4/3E4 ; 6Y5/1C4/1E4/2C4/2E4/3E4/PC4/PE4 | E | 1198 | AZQ,BMD | M | +/- | TSW | 05/04 ▸ 11/04 | 6Q0121253L | **732864** | 632 414,5 | ALM |
| 1.2 i 6Y21C4 | E | 1198 | BMD | M | + | TSW | 05/04 ▸ 07/04 | 6Q0121253L | **732864** | 632 414,5 | ALM |
| 1.2 i,1.2 i 6V 6Y2/0C4/1C4/2C4 6Y3/1C4/2C4 ; 6Y5/1C4/2C4/PC4 | E | 1198 | AWY,BMD | M | - | TSW | 07/01 ▸ 07/04 | 6Q0121253AE | **732864** | 632 414,5 | ALM |
| 1.2 i,1.2 i 6V 6Y2/0C4/1C4/1E4/2C4 2E4/3E4 ; 6Y3/1C4/1E4/2C4/2E4/3E4 ; 6Y5/1C4 1E4/2C4/2E4/3E4/PC4/PE4 | E | 1198 | AWY,AZQ,BMD | M | - | MODULE | 07/01 ▸ 07/04 | 6Q0121201HA | **733062** | 430 414,5 | ALM |
| 1.2 i 6Y2/1E4/2E4/3E4 ; 6Y3/1E4/2E4/3E4 ; 6Y5/1E4 2E4/3E4/PE4 | E | 1198 | AZQ | M | | TSW | 01/03 ▸ 07/04 | 6Q0121253AE | **732864** | 632 414,5 | ALM |
| 1.2 i 6Y2/1C4/2C4 ; 6Y3/1C4/2C4 ; 6Y5/1C4/2C4/PC4 | E | 1198 | BMD | M | | MODULE | 05/04 ▸ 07/04 | 6Q0121201BT | **733062** | 430 414,5 | ALM |
| 1.2 i,1.2 i 6V 6Y2/0C4/1C4/1E4/2C4 2E4/3E4 ; 6Y3/1C4/1E4/2C4/2E4/3E4 ; 6Y5/1C4 1E4/2C4/2E4/3E4/PC4/PE4 6Y-3-647 001 ▸ | E | 1198 | AWY,AZQ,BMD | M | +/- | TSW | 07/01 ▸ 07/04 | 6Q0121253Q | **732862** | 632 414,5 | ALM |
| 1.4 i 16V 6Y2/1F4/1J4/2F4/2J4 3F4/3J4 ; 6Y3/1F4/1J4/2F4/2J4/3F4/3J4 ; 6Y5 1F4/1J4/2F4/2J4/3F4/3J4 | E | 1390 | AUA,AUB,BBY,BBZ,BKY | M | +/- | TSW | 10/99 ▸ 07/04 | 6Q0121253R | **732864** | 632 414,5 | ALM |
| 1.4 i 16V 6Y2/1F4/1J4/2F4/2J4 3F4/3J4 ; 6Y3/1F4/1J4/2F4/2J4/3F4/3J4 ; 6Y5 1F4/1J4/2F4/2J4/3F4/3J4 | E | 1390 | AUA,AUB,BBY,BBZ,BKY | M | + | TSW | 10/99 ▸ | 6Q0121253L | **732864** | 632 414,5 | ALM |
| 1.4 i 16V 6Y2/1F4/1J4/2F4/2J4 3F4/3J4 ; 6Y3/1F4/1J4/2F4/2J4/3F4/3J4 ; 6Y5 1F4/1J4/2F4/2J4/3F4/3J4 | E | 1390 | AUA,AUB,BBY,BBZ,BKY | M | + | TSW | 10/99 ▸ 07/04 | 6Q0121253Q | **732862** | 632 414,5 | ALM |
| 1.4 i 16V 6Y51F4 | E | 1390 | BKY | M | + | TSW | 05/04 ▸ 07/04 | 6Q0121253R | **732864** | 632 414,5 | ALM |
| 1.4 i 16V 6Y2/1F4/1J4/2F4/2J4 3F4/3J4 ; 6Y3/1F4/1J4/2F4/2J4/3F4/3J4 ; 6Y5 1F4/1J4/2F4/2J4/3F4/3J4 | E | 1390 | AUA,AUB,BBY,BBZ,BKY | M | - | TSW | 10/99 ▸ 07/04 | 6Q0121253AE | **732864** | 632 414,5 | ALM |
| 1.4 i 16V 6Y2/1F4/1J4/2F4/2J4 3F4/3J4 ; 6Y3/1F4/1J4/2F4/2J4/3F4/3J4 ; 6Y5 1F4/1J4/2F4/2J4/3F4/3J4 | E | 1390 | AUA,AUB,BBY,BBZ,BKY | M | - | MODULE | 10/99 ▸ 07/04 | 6Q0121201HA | **733062** | 430 414,5 | ALM |
| 1.4 i 16V 6Y2/1F4/2F4/3F4 6Y3/1F4/2F4/3F4 ; 6Y5/1F4/2F4/3F4 | E | 1390 | AUA,BBY | M | | TSW | 10/99 ▸ 05/04 | 6Q0121253L | **732864** | 632 414,5 | ALM |
| 1.4 i 16V 6Y2/1F4/2F4/3F4 6Y3/1F4/2F4/3F4 ; 6Y5/1F4/2F4/3F4 | E | 1390 | BBY,BKY | M | | MODULE | 05/02 ▸ 07/04 | 6Q0121201BT | **733062** | 430 414,5 | ALM |

# SKODA (.../...)

## FABIA (99>2004) (.../...)

| | | CC | | | AC | | | OE | Valeo | DIM. | TECH |
|---|---|---|---|---|---|---|---|---|---|---|---|
| 1.4 i 16V | 6Y2/1F3/2F3/3F3 6Y3/1F3/2F3/3F3 ; 6Y5/1F3/2F3/3F3 | E | 1390 | AUA,BBY,BKY | A | +/- | TSW | 05/00 ▸ 07/04 | 6Q0121253R | **732864** | 632 414,5 | ALM |
| 1.4 i 16V | 6Y2/1F3/2F3/3F3 6Y3/1F3/2F3/3F3 ; 6Y5/1F3/2F3/3F3 | E | 1390 | BKY | A | + | TSW | 05/04 ▸ 07/04 | 6Q0121253L | **732864** | 632 414,5 | ALM |
| 1.4 i 16V | 6Y2/1F3/2F3/3F3 6Y3/1F3/2F3/3F3 ; 6Y5/1F3/2F3/3F3 | E | 1390 | AUA,BBY,BKY | A | - | TSW | 05/00 ▸ 07/04 | 6Q0121253AE | **732864** | 632 414,5 | ALM |
| 1.4 i 16V | 6Y2/1F3/2F3/3F3 6Y3/1F3/2F3/3F3 ; 6Y5/1F3/2F3/3F3 | E | 1390 | AUA,BBY,BKY | A | - | MODULE | 05/00 ▸ 07/04 | 6Q0121201HA | **733062** | 430 414,5 | ALM |
| 1.4 i 16V | 6Y2/1F3/2F3/3F3 6Y3/1F3/2F3/3F3 ; 6Y5/1F3/2F3/3F3 | E | 1390 | BBY,BKY | A | | MODULE | 04/02 ▸ 07/04 | 6Q0121201BT | **733062** | 430 414,5 | ALM |
| 1.4 i 16V | 6Y2/1F3/2F3/3F3 6Y3/1F3/2F3/3F3 ; 6Y5/1F3/2F3/3F3 | E | 1390 | BBY | A | | TSW | 04/02 ▸ 05/04 | 6Q0121253L | **732864** | 632 414,5 | ALM |
| 1.4 i 16V | 6Y2/1F3/2F3/3F3 6Y3/1F3/2F3/3F3 ; 6Y5/1F3/2F3/3F3 ▸ 6Y-3-647 001 | E | 1390 | AUA,BBY,BKY | A | + | TSW | 05/00 ▸ 07/04 | 6Q0121253Q | **732862** | 632 414,5 | ALM |
| 1.4 i 16V | 6Y2/1F3/2F3/3F3 6Y3/1F3/2F3/3F3 ; 6Y5/1F3/2F3/3F3 ▸ 6Y-5-218 969 | E | 1390 | BKY | A | - | TSW | 08/04 ▸ 09/04 | 6Q0121253J | **732863** | 430 414,5 | ALM |
| 1.4 i 16V | 6Y2/1F4/1J4/2F4/2J4 3F4/3J4 ; 6Y3/1F4/1J4/2F4/2J4/3F4/3J4 ; 6Y5 1F4/1J4/2F4/2J4/3F4/3J4 ▸ 6-Y-5-218 969, 6Y-5-218 969 | E | 1390 | BBZ,BKY | M | - | TSW | 05/04 ▸ 09/04 | 6Q0121253J | **732863** | 430 414,5 | ALM |
| 1.4 i | 6Y2/0B4/1B4/1D4/2B4/2D4/3D4 ; 6Y3/1B4/1D4 2B4/2D4/3D4 ; 6Y5/1B4/1D4/2B4/2D4/3D4/PB4 PD4 | E | 1397 | AME,AQW,ATZ,AZE,AZF | M | +/- | TSW | 08/99 ▸ 05/03 | 6Q0121253R | **732864** | 632 414,5 | ALM |
| 1.4 i | 6Y2/0B4/1B4/1D4/2B4/2D4/3D4 ; 6Y3/1D4/2D4 3D4 ; 6Y5/1D4/2D4/3D4/PD4 | E | 1397 | AME,AQW,ATZ,AZE,AZF | M | + | TSW | 08/99 ▸ 05/03 | 6Q0121253L | **732864** | 632 414,5 | ALM |
| 1.4 i | 6Y2/0B4/1B4/1D4/2B4/2D4/3D4 ; 6Y3/1B4/1D4 2B4/2D4/3D4 ; 6Y5/1B4/1D4/2B4/2D4/3D4/PB4 PD4 | E | 1397 | AME,AQW,ATZ,AZE,AZF | M | - | MODULE | 08/99 ▸ 05/03 | 6Q0121201HA | **733062** | 430 414,5 | ALM |
| 1.4 i | 6Y2/0B4/1B4/1D4/2B4/2D4/3D4 ; 6Y3/1B4/1D4 2B4/2D4/3D4 ; 6Y5/1B4/1D4/2B4/2D4/3D4/PB4 PD4 | E | 1397 | AME,AQW,ATZ,AZE,AZF | M | - | TSW | 08/99 ▸ 05/03 | 6Q0121253AE | **732864** | 632 414,5 | ALM |
| 1.4 i | 6Y2/0B4/1B4/1D4/2B4/2D4/3D4 ; 6Y3/1B4/1D4 2B4/2D4/3D4 ; 6Y5/1B4/1D4/2B4/2D4/3D4/PB4 PD4 | E | 1397 | AME,AQW,ATZ,AZE,AZF | M | | MODULE | 08/99 ▸ 05/03 | 6Q0121201BT | **733062** | 430 414,5 | ALM |
| 1.4 i | 6Y3/1B4/1D4/2B4/2D4/3D4 ; 6Y5/1B4/2B4/PB4 PD4 | E | 1397 | AQW,ATZ,AZE,AZF | M | | TSW | 08/99 ▸ 05/03 | 6Q0121253L | **732864** | 632 414,5 | ALM |
| 1.4 i | 6Y2/0B4/1B4/1D4/2B4/2D4/3D4 ; 6Y5/1D4/2D4 3D4 ▸ 1-223 280 | E | 1397 | AME,AQW,ATZ,AZE,AZF | M | | TSW | 08/99 ▸ 05/03 | 6Q0121253AE | **732864** | 632 414,5 | ALM |
| 1.4 i | 6Y2/0B4/1B4/1D4/2B4/2D4/3D4 ; 6Y3/1B4/1D4 2B4/2D4/3D4 ; 6Y5/1B4/1D4/2B4/2D4/3D4/PB4 PD4 ▸ 6Y-3-647 001, 6Y-3-647 000 | E | 1397 | AME,AQW,ATZ,AZE,AZF | M | + | TSW | 08/99 ▸ 08/02 | 6Q0121253Q | **732862** | 632 414,5 | ALM |
| 2.0 i | 6Y2/1T4/2T4/3T4 ; 6Y3/1T4/2T4/3T4 ; 6Y5/1T4 2T4/3T4 | E | 1984 | AZL | M | +/- | TSW | 12/99 ▸ 07/04 | 6Q0121253R | **732864** | 632 414,5 | ALM |
| 2.0 i | 6Y2/1T4/2T4 ; 6Y3/1T4/2T4 ; 6Y5/1T4/2T4 | E | 1984 | AZL | M | | TSW | 12/99 ▸ 07/04 | 6Q0121253AE | **732864** | 632 414,5 | ALM |
| 2.0 i | 6Y2/1T4/2T4 ; 6Y3/1T4/2T4 ; 6Y5/1T4/2T4 | E | 1984 | AZL | M | | TSW | 07/00 ▸ 07/04 | 6Q0121253L | **732864** | 632 414,5 | ALM |
| 1.4 TDi | 6Y2/144/244/344 6Y3/144/244/344 ; 6Y5/144/244/344 | D | 1422 | AMF | M | +/- | TSW | 04/03 ▸ 07/04 | 6Q0121253R | **732864** | 632 414,5 | ALM |
| 1.4 TDi | 6Y2144 | D | 1422 | AMF | M | + | TSW | 04/03 ▸ 07/04 | 6Q0121253L | **732864** | 632 414,5 | ALM |
| 1.4 TDi | 6Y2/144/244/344 6Y3/144/244/344 ; 6Y5/144/244/344 | D | 1422 | AMF | M | | MODULE | 04/03 ▸ 07/04 | 6Q0121201BT | **733062** | 430 414,5 | ALM |
| 1.4 TDi | 6Y2/244/344 ; 6Y3 144/244/344 ; 6Y5/144/244/344 | D | 1422 | AMF | M | | TSW | 04/03 ▸ 07/04 | 6Q0121253L | **732864** | 632 414,5 | ALM |
| 1.4 TDi | 6Y2/144/244/344 6Y3/144/244/344 ; 6Y5/144/244/344 | D | 1422 | AMF | M | | TSW | 04/03 ▸ 07/04 | 6Q0121253AE | **732864** | 632 414,5 | ALM |
| 1.9 SDi,1.9 TDi | 6Y2/124/224/264/324 364/585 ; 6Y3/124/164/224/264/324/364 ; 6Y5 124/164/224/264/324/364/P24 | D | 1896 | ASY,ASZ,ATD | M | +/- | TSW | 11/99 ▸ 07/04 | 6Q0121253R | **732864** | 632 414,5 | ALM |
| 1.9 SDi | 6Y2/124/224/324 6Y3/124/224/324 ; 6Y5/124/224/324/P24 | D | 1896 | ASY | M | +/- | TSW | 11/99 ▸ 07/04 | 6Q0121253Q | **732862** | 632 414,5 | ALM |
| 1.9 TDi | 6Y2164 | D | 1896 | ATD | M | + | TSW | 01/00 ▸ 11/02 | 6Q0121253R | **732864** | 632 414,5 | ALM |
| 1.9 TDi | 6Y3364 | D | 1896 | ATD | M | + | TSW | 03/01 ▸ 11/02 | 6Q0121253L | **732864** | 632 414,5 | ALM |
| 1.9 SDi,1.9 TDi | 6Y2/124/164/224/264 324/364/585 ; 6Y3/164/264 ; 6Y5/124/164/224 264/324/364 | D | 1896 | ASY,ASZ,ATD | M | | TSW | 11/99 ▸ 07/04 | 6Q0121253L | **732864** | 632 414,5 | ALM |
| 1.9 TDi | 6Y3364 | D | 1896 | ATD | M | | TSW | 03/01 ▸ 11/02 | 6Q0121253AE | **732864** | 632 414,5 | ALM |
| 1.9 TDi | 6Y2585 | D | 1896 | ASZ | M | | TSW | 06/03 ▸ 07/04 | 6Q0121253Q | **732862** | 632 414,5 | ALM |

Radiator Ψυγείο Vodní chladič Радиатор vízhűtő Radiador Radiator Radyatör Radiator Radiatore di raffreddamento Motorkühler Radiateur Radiator



• **New** Nouveau **Nuevo** Novo **Nuovo** Nieuw **Neu** Nowość **Yeni** Новый Νέο **Nový**

| Type Ctr. | | CC | | AC | | | OE | Valeo | DIM. | TECH |
|---|---|---|---|---|---|---|---|---|---|---|

# SKODA (.../...)

## FABIA (99>2004) (.../...)

| | | | | | | | | | | | | |
|---|---|---|---|---|---|---|---|---|---|---|---|---|
| 1.9 TDi | 6Y2585 | D | 1896 | ASZ | M | | TSW | 06/03 ▸ 07/04 | 6Q0121253AD | **732864** | 632 414,5 | ALM |
| 1.9 TDi | 6Y2/164/264/364<br>6Y3/164/264/364 ; 6Y5/164/264/364 | D | 1896 | ATD | M | - | TSW | 01/00 ▸ 08/02 | 6Q0121253Q | **732862** | 632 414,5 | ALM |

## FABIA (FL) (2004>2007)

| | | | | | | | | | | | | |
|---|---|---|---|---|---|---|---|---|---|---|---|---|
| 1.2 i,1.2 i 12V | 6Y2/0C4/1C4/1E4/2C4<br>2E4/3E4 ; 6Y3/1C4/1E4/2C4/2E4/3E4 ; 6Y5/1C4<br>1E4/2C4/2E4/3E4/PC4/PE4 | E | 1198 | AZQ,BMD,BME-E4 | M | +/- | TSW | 08/04 ▸ 12/07 | 6Q0121253R | **732864** | 632 414,5 | ALM |
| 1.2 i,1.2 i 12V | 6Y2/0C4/1C4/1E4/2C4<br>2E4/3E4 ; 6Y3/1C4/1E4/2C4/2E4/3E4 ; 6Y5/1C4<br>1E4/2C4/2E4/3E4/PC4/PE4 | E | 1198 | AZQ,BMD,BME-E4 | M | +/- | TSW | 08/04 ▸ 12/07 | 6Q0121253Q | **732862** | 632 414,5 | ALM |
| 1.2 i 12V | 6Y21E4 | E | 1198 | BME-E4 | M | + | TSW | 12/04 ▸ 11/06 | 6Q0121253Q | **732862** | 632 414,5 | ALM |
| 1.2 i 12V | 6Y21E4 | E | 1198 | BME-E4 | M | + | TSW | 12/04 ▸ 11/06 | 6Q0121253R | **732864** | 632 414,5 | ALM |
| 1.2 i,1.2 i 12V | 6Y2/0C4/1C4/1E4/2C4<br>2E4/3E4 ; 6Y3/1C4/1E4/2C4/2E4/3E4 ; 6Y5/1C4<br>1E4/2C4/2E4/3E4/PC4/PE4 | E | 1198 | AZQ,BMD,BME-E4 | M | - | MODULE | 08/04 ▸ 12/07 | 6Q0121201HA | **733062** | 430 414,5 | ALM |
| 1.4 i 16V | 6Y2/1F4/1J4/2F4/2J4<br>3F4/3J4 ; 6Y3/1F4/1J4/2F4/2J4/3F4/3J4 ; 6Y5<br>1F4/1J4/2F4/2J4/3F4/3J4 | E | 1390 | BBZ-E4,BKY | M | +/- | TSW | 08/04 ▸ 12/07 | 6Q0121253R | **732864** | 632 414,5 | ALM |
| 1.4 i 16V | 6Y2/1F4/1J4/2F4/2J4<br>3F4/3J4 ; 6Y3/1F4/1J4/2F4/2J4/3F4/3J4 ; 6Y5<br>1F4/1J4/2F4/2J4/3F4/3J4 | E | 1390 | BBZ-E4,BKY | M | + | TSW | 08/04 ▸ 12/07 | 6Q0121253Q | **732862** | 632 414,5 | ALM |
| 1.4 i 16V | 6Y2/1F4/1J4/2F4/2J4<br>3F4/3J4 ; 6Y3/1F4/1J4/2F4/2J4/3F4/3J4 ; 6Y5<br>1F4/1J4/2F4/2J4/3F4/3J4 | E | 1390 | BBZ-E4,BKY | M | - | MODULE | 08/04 ▸ 12/07 | 6Q0121201HA | **733062** | 430 414,5 | ALM |
| 1.4 i 16V | 6Y2/1F4/1J4/2F4/2J4<br>3F4/3J4 ; 6Y3/1F4/1J4/2F4/2J4/3F4/3J4 ; 6Y5<br>1F4/1J4/2F4/2J4/3F4/3J4 | E | 1390 | BBZ-E4,BKY | M | - | TSW | 08/04 ▸ 12/07 | 6Q0121253AE | **732864** | 632 414,5 | ALM |
| 1.4 i 16V | 6Y2/1F3/2F3/3F3<br>6Y3/1F3/2F3/3F3 ; 6Y5/1F3/2F3 | E | 1390 | BKY | A | +/- | TSW | 08/04 ▸ 12/07 | 6Q0121253R | **732864** | 632 414,5 | ALM |
| 1.4 i 16V | 6Y2/1F3/3F3 ; 6Y3<br>2F3/3F3 ; 6Y5/1F3/2F3/3F3 | E | 1390 | BKY | A | + | TSW | 08/04 ▸ 12/07 | 6Q0121253R | **732864** | 632 414,5 | ALM |
| 1.4 i 16V | 6Y5/1F3/2F3/3F3 | E | 1390 | BKY | A | + | TSW | 08/04 ▸ 12/07 | 6Q0121253Q | **732862** | 632 414,5 | ALM |
| 1.4 i 16V | 6Y2/1F3/2F3/3F3<br>6Y3/1F3/2F3/3F3 | E | 1390 | BKY | A | - | TSW | 08/04 ▸ 12/07 | 6Q0121253Q | **732862** | 632 414,5 | ALM |
| 1.4 i 16V | 6Y2/1F3/2F3/3F3<br>6Y3/1F3/2F3/3F3 ; 6Y5/1F3/2F3/3F3 | E | 1390 | BKY | A | - | TSW | 08/04 ▸ 12/07 | 6Q0121253AE | **732864** | 632 414,5 | ALM |
| 1.4 i 16V | 6Y2/1F3/2F3/3F3<br>6Y3/1F3/2F3/3F3 ; 6Y5/1F3/2F3/3F3 | E | 1390 | BKY | A | - | MODULE | 08/04 ▸ 12/07 | 6Q0121201HA | **733062** | 430 414,5 | ALM |
| 2.0 i | 6Y2/2T4/3T4 ; 6Y3/2T4/3T4 ; 6Y5/2T4/3T4 | E | 1984 | AZL-E4 | M | +/- | TSW | 08/04 ▸ 12/07 | 6Q0121253R | **732864** | 632 414,5 | ALM |
| 2.0 i | 6Y31T4 ; 6Y2/1T4 ; 6Y5/1T4/3T4 | E | 1984 | AZL-E4 | M | + | TSW | 08/04 ▸ 12/07 | 6Q0121253R | **732864** | 632 414,5 | ALM |
| 2.0 i | 6Y2/1T4/2T4/3T4 ; 6Y3/1T4/2T4/3T4 ; 6Y5/1T4<br>2T4/3T4 | E | 1984 | AZL-E4 | M | - | TSW | 08/04 ▸ 12/07 | 6Q0121253Q | **732862** | 632 414,5 | ALM |
| 1.4 TDi | 6Y2/114/134/144/214<br>234/244/314/334/344 ; 6Y3/114/124/134/144<br>1G4/214/234/244/2G4/2GA/314/334/344/3G4<br>6Y5/114/134/144/1G4/214/234/244/2G4/314/334<br>344/3G4/P14 | D | 1422 | AMF,BNM,BNV | M | +/- | TSW | 08/04 ▸ 12/07 | 6Q0121253R | **732864** | 632 414,5 | ALM |
| 1.9 SDi,1.9 TDi | 6Y2/124/224/324/585<br>6Y3/124/164/224/324/364 ; 6Y5/124/224/264<br>324/364/P24 | D | 1896 | ASY,ASZ,ATD,AXR,BLT | M | +/- | TSW | 08/04 ▸ 12/07 | 6Q0121253R | **732864** | 632 414,5 | ALM |
| 1.9 SDi | 6Y2/124/224/324<br>6Y3/124/224/324 ; 6Y5/124/224/324/P24 | D | 1896 | ASY | M | +/- | TSW | 08/04 ▸ 12/07 | 6Q0121253L | **732864** | 632 414,5 | ALM |
| 1.9 SDi | 6Y2/124/224/324<br>6Y3/124/224/324 ; 6Y5/124/224/324/P24 | D | 1896 | ASY | M | +/- | TSW | 08/04 ▸ 12/07 | 6Q0121253Q | **732862** | 632 414,5 | ALM |
| 1.9 TDi | 6Y2585 | D | 1896 | BLT | M | +/- | TSW | 10/05 ▸ 04/07 | 6Q0121253AD | **732864** | 632 414,5 | ALM |
| 1.9 TDi | 6Y2/164/264/364<br>6Y3/164/264/364 ; 6Y5/164/264/364 | D | 1896 | ATD,AXR | M | + | TSW | 08/04 ▸ 12/07 | 6Q0121253R | **732864** | 632 414,5 | ALM |
| 1.9 TDi | 6Y2585 | D | 1896 | ASZ,BLT | M | + | TSW | 08/04 ▸ 04/07 | 6Q0121253AD | **732864** | 632 414,5 | ALM |
| 1.9 TDi | 6Y2/164/264/364/585<br>6Y3/164/264/364 ; 6Y5/164/264/364 | D | 1896 | ATD,AXR,BLT | M | - | TSW | 08/04 ▸ 12/07 | 6Q0121253Q | **732862** | 632 414,5 | ALM |
| 1.9 TDi | 6Y2/164/264/364/585<br>6Y3/164/264/364 ; 6Y5/164/264/364 | D | 1896 | ASZ,ATD,AXR,BLT | M | - | TSW | 08/04 ▸ 12/07 | 6Q0121253L | **732864** | 632 414,5 | ALM |
| 1.9 TDi | 6Y2585 | D | 1896 | ASZ | M | | TSW | 08/04 ▸ 04/07 | 6Q0121253Q | **732862** | 632 414,5 | ALM |

## FABIA II (2007>)

| | | | | | | | | | | | | |
|---|---|---|---|---|---|---|---|---|---|---|---|---|
| 1.2 i,1.2 i 12V | 5454D4 ; 542/3B4/3D4<br>4D4 | E | 1198 | BBM-E4,BZG-E4 | M | +/- | TSW | 12/06 ▸ | 6Q0121253Q | **732862** | 632 414,5 | ALM |
| 1.2 i,1.2 i 12V | 542/1B4/1D4/2B4/2D4<br>3B4/3D4/4B4/4D4 ; 545/1D4/2D4/3D4/4D4 | E | 1198 | BBM-E2,BBM-E4,BZG-E2,BZG-E4 | M | + | TSW | 12/06 ▸ | 6Q0121253Q | **732862** | 632 414,5 | ALM |

# SKODA (.../...)

## FABIA II (2007>) (.../...)

| | | | | | | | | | | | | |
|---|---|---|---|---|---|---|---|---|---|---|---|---|
| 1.2 i,1.2 i 12V | 542/1B4/1D4/2B4/2D4 3B4/3D4/4B4/4D4 ; 545/1D4/2D4/3D4/4D4 | E | 1198 | BBM-E2,BBM-E4,BZG-E2,BZG-E4 | M | + | TSW | 12/06 ▸ | 6Q0121253R | 732864 | 632 414,5 | ALM |
| 1.2 i,1.2 i 12V | 542/1B4/1D4/2B4/2D4 3B4/3D4/4B4/4D4 ; 545/1D4/2D4/3D4/4D4 | E | 1198 | BBM-E2,BBM-E4,BZG-E2 | M | - | MODULE | 12/06 ▸ | 6Q0121201HA | 733062 | 430 414,5 | ALM |
| 1.2 i 12V | 542/1D4/2D4/3D4/4D4 545/1D4/2D4/3D4/4D4 | E | 1198 | BZG-E4 | M | | MODULE | 01/07 ▸ | 6Q0121201HA | 733062 | 430 414,5 | ALM |
| 1.4 i,1.4 i 16V | 542/1D4/1G4/2G4/3G4 4G4 ; 545/1G4/2G4/3G4/4G4 | E | 1390 | BXW-E2,BXW-E4 | M | +/- | TSW | 01/07 ▸ | 6Q0121253R | 732864 | 632 414,5 | ALM |
| 1.4 i,1.4 i 16V | 542/1D4/1G4/2G4/3G4 4G4 ; 545/1G4/2G4/3G4/4G4 | E | 1390 | BXW-E2,BXW-E4 | M | + | TSW | 01/07 ▸ | 6Q0121253Q | 732862 | 632 414,5 | ALM |
| 1.4 i,1.4 i 16V | 542/1D4/1G4/2G4/3G4 4G4 ; 545/1G4/2G4/3G4/4G4 | E | 1390 | BXW-E2,BXW-E4 | M | - | MODULE | 01/07 ▸ | 6Q0121201HA | 733062 | 430 414,5 | ALM |
| 1.4 i,1.4 i 16V | 542/1D4/1G4/2G4/3G4 4G4 ; 545/1G4/2G4/3G4/4G4 | E | 1390 | BXW-E2,BXW-E4 | M | - | TSW | 01/07 ▸ | 6Q0121253AE | 732864 | 632 414,5 | ALM |
| 1.6 i,1.6 i 16V | 542/1K4/2K4/3K4/4K4 545/1K4/2K4/3K4/4K4 | E | 1598 | BTS-E2,BTS-E4 | M | +/- | TSW | 04/07 ▸ | 6Q0121253R | 732864 | 632 414,5 | ALM |
| 1.6 i,1.6 i 16V | 542/3K4/4K4 ; 545 1K4/2K4/4K4 | E | 1598 | BTS-E2 | M | +/- | MODULE | 04/07 ▸ | 6Q0121201HA | 733062 | 430 414,5 | ALM |
| 1.6 i,1.6 i 16V | 542/1K4/2K4/3K4/4K4 545/1K4/2K4/3K4/4K4 | E | 1598 | BTS-E2,BTS-E4 | M | + | TSW | 04/07 ▸ | 6Q0121253Q | 732862 | 632 414,5 | ALM |
| 1.6 i,1.6 i 16V | 542/1K4/2K4/3K4/4K4 545/1K4/2K4/3K4/4K4 | E | 1598 | BTS-E2,BTS-E4 | M | - | TSW | 04/07 ▸ | 6Q0121253AE | 732864 | 632 414,5 | ALM |
| 1.6 i,1.6 i 16V | 542/1K4/2K4/3K4/4K4 545/1K4/2K4/3K4/4K4 | E | 1598 | BTS-E2,BTS-E4 | M | - | MODULE | 04/07 ▸ | 6Q0121201HA | 733062 | 430 414,5 | ALM |
| 1.6 i,1.6 i 16V | 5454KC ; 542/1KC/2KC 4KC | E | 1598 | BTS-E2 | A | +/- | MODULE | 07/07 ▸ | 6Q0121201HA | 733062 | 430 414,5 | ALM |
| 1.6 i,1.6 i 16V | 542/1KC/2KC/3KC/4KC 545/1KC/2KC/3KC/4KC | E | 1598 | BTS-E2,BTS-E4 | A | + | TSW | 07/07 ▸ | 6Q0121253R | 732864 | 632 414,5 | ALM |
| 1.6 i,1.6 i 16V | 542/1KC/2KC/3KC/4KC 545/1KC/2KC/3KC/4KC | E | 1598 | BTS-E2,BTS-E4 | A | - | TSW | 07/07 ▸ | 6Q0121253AE | 732864 | 632 414,5 | ALM |
| 1.6 i,1.6 i 16V | 542/1KC/2KC/3KC/4KC 545/1KC/2KC/3KC/4KC | E | 1598 | BTS-E2,BTS-E4 | A | - | MODULE | 07/07 ▸ | 6Q0121201HA | 733062 | 430 414,5 | ALM |
| 1.4 TDI | 542/114/134/144/214 234/244/314/334/414/434/444 ; 545/114/134 214/234/244/314/334/344/414/434 | D | 1422 | BMS/F,BNM,BNV | M | +/- | TSW | 01/07 ▸ | 6Q0121253R | 732864 | 632 414,5 | ALM |
| 1.4 TDI | 542/134/214/344/414 444 ; 545/144/444 | D | 1422 | BMS/F,BNM,BNV | M | + | TSW | 01/07 ▸ | 6Q0121253R | 732864 | 632 414,5 | ALM |
| 1.4 TDI | 542/114/134/144/214 234/244/314/334/344/414/434/444 ; 545/144 244/344/444 | D | 1422 | BMS/F,BNM,BNV | M | - | TSW | 01/07 ▸ | 6Q0121253Q | 732862 | 632 414,5 | ALM |
| 1.9 TDI | 542/174/264/364/374 464 ; 545/264/274/364/474 | D | 1896 | BLS,BSW | M | +/- | TSW | 04/07 ▸ | 6Q0121253R | 732864 | 632 414,5 | ALM |
| 1.9 TDI | 542/164/264/274/464 474 ; 545/164/264/274/364/464 | D | 1896 | BLS,BSW | M | + | TSW | 04/07 ▸ | 6Q0121253R | 732864 | 632 414,5 | ALM |
| 1.9 TDI | 545/164/264 | D | 1896 | BSW | M | + | TSW | 10/07 ▸ | 6Q0121253Q | 732862 | 632 414,5 | ALM |
| 1.9 TDI | 542/164/174/264/274 364/374/464/474 ; 545/164/264/274/364/464 474 | D | 1896 | BLS,BSW | M | - | TSW | 04/07 ▸ | 6Q0121253Q | 732862 | 632 414,5 | ALM |
| 1.9 TDI | 545/164/364/464 | D | 1896 | BSW | M | | TSW | 10/07 ▸ | 6Q0121253Q | 732862 | 632 414,5 | ALM |

## FAVORIT

| | | | | | | | | | | | | |
|---|---|---|---|---|---|---|---|---|---|---|---|---|
| 1.1 | | E | 1137 | SKOD04 | M | | TSW | 01/89 ▸ 07/95 | 6U0121251 | 730375 | 490 285 | CBS |
| 1.3 | AEA200 ; CEA300 ; CEE300 ; ADA/200/300 | E | 1289 | 136,781135B | M | - | TSW | 03/88 ▸ 07/95 | 113610500 | 730375 | 490 285 | CBS |
| 1.3,1.3 i | 135/-OK/IGK ; 136 IGK/XOK ; AEA200 ; CEA300 ; CEE300 ; ADA/200 300 | E | 1289 | 135I,135OK,135UK,136,136IG 136X,781135B | M | | TSW | 03/88 ▸ 07/95 | 6U0121251 | 730375 | 490 285 | CBS |

## FELICIA (94>2001)

| | | | | | | | | | | | | |
|---|---|---|---|---|---|---|---|---|---|---|---|---|
| 1.3 i | 6U5374 | E | 1289 | AMG | M | +/- | | 08/96 ▸ 12/97 | 6U0121251C | | | |
| 1.3,1.3 i | 6U1/314/334/344/372 374/414/434/435/474 ; 6U5/334/335/344/384 414/434/435/474/484 ; 6U6/114/134/144/174 184 ; 6U7/114/134/174 ; EEA/413/414/613 EEG413 ; EEF/613/614/679 ; EFF/413/614 | E | 1289 | 135,135CP,135I,136I,13MPI54 13MPI68,AMG,AMH,AMJ | M | + | | 10/94 ▸ 12/97 | 6U0121251C | | | |
| 1.3 i | 6U1/384/484 | E | 1289 | AMH | M | + | TSW | 08/96 ▸ 12/97 | 6U0121253A | 732479 | 590 322 | ALM |
| 1.3,1.3 i | 6U1/335/444 ; 6U5 314/444 ; 6U7/144/184 ; EEG614 ; EEA/614 673 ; EFF/613/679 | E | 1289 | 135,135CP,136I,13MPI54 13MPI68,AMH,AMJ | M | - | | 10/94 ▸ 12/97 | 6U0121251C | | | |

Radiator Radiateur Motorkühler Radiatore di raffreddamento Radiator Radyatör Radiador Радиатор vízhűtő Vodní chladič Radiator Ψυγείο



• **New** Nouveau **Nuevo** Novo **Nuovo** Nieuw **Neu** Nowość **Yeni** Новый Νέο **Nový**

## FELICIA (94>2001) (.../...)

| | | | | | | | | | | | | | |
|---|---|---|---|---|---|---|---|---|---|---|---|---|---|
| 1.3,1.3 i | 6U1/314/334/335/344 372/374/414/434/435/444/474 ; 6U5/314/334 335/344/374/384/414/434/435/444/474/484 6U6/114/134/144/174/184 ; 6U7/114/134/144 174/184 ; EEA/413/414/613/614/673 ; EEF/613 614/679 ; EEG/413/614 ; EFF/413/613/614/679 | E | 1289 | 135,135CP,135I,136I,13MPI54 13MPI68,AMG,AMH,AMJ | M | - | TSW | 10/94 ▸ 12/97 | 6U0121251 | 730375 | 490 | 285 | CBS |
| 1.3,1.3 i | 6U1/314/334/344/372 414/434/444 ; 6U5/334/344/414/434/444 EEF614 ; EEA/413/414/613/614 ; EFF413 ; EEG 413/614 | E | 1289 | 135,135CP,135I,136I,AMG | M | - | TSW | 10/94 ▸ 07/95 | 115610501 | 730375 | 490 | 285 | CBS |
| 1.3 i | 6U1/384/484 | E | 1289 | AMH | M | - | | 08/96 ▸ 12/97 | 6U0121253 | | 590 | 285 | ALM |
| 1.6 i | 6U1/3G4/4G4 ; 6U61G4 ; 6UFFG4 ; EGF615 ; 6U5 3G4/4G4 | E | 1598 | 16MPI,AEE | M | + | TSW | 05/95 ▸ 12/97 | 6U0121253A | 732479 | 590 | 322 | ALM |
| 1.6 i | 6U1/3G4/4G4 ; 6U61G4 ; 6U71G4 ; 6UFFG4 EGF615 ; 6U5/3G4/4G4 | E | 1598 | 16MPI,AEE | M | - | | 05/95 ▸ 12/97 | 6U0121253 | | 590 | 285 | ALM |
| 1.6 i | 6U71G4 | E | 1598 | AEE | M | - | TSW | 08/97 ▸ 12/97 | 6U0121253A | 732479 | 590 | 322 | ALM |
| 1.9 D | 6U5/3H4/4H4 | D | 1896 | AEF | M | +/- | TSW | 10/95 ▸ 12/97 | 6U0121253A | 732479 | 590 | 322 | ALM |
| 1.9 D | 6U61H4 ; 6U71H4 ; 6U1/3H4/4H4 ; EHH/613/614 673/679 | D | 1896 | AEF | M | - | TSW | 10/95 ▸ 12/97 | 6U0121253A | 732479 | 590 | 322 | ALM |

## FELICIA (FACELIFT) (98>2001)

| | | | | | | | | | | | | | |
|---|---|---|---|---|---|---|---|---|---|---|---|---|---|
| 1.3 i | 6UFF85 | E | 1289 | AMH | M | + | TSW | 01/98 ▸ 08/01 | 6U0121253A | 732479 | 590 | 322 | ALM |
| 1.3,1.3 i | 6U1/375/385/475/485 6U5/375/385/475/485 ; 6U6/135/175/185 6UFF85 ; 6U7/175/185 | E | 1289 | AMG,AMH,AMJ | M | + | | 01/98 ▸ 08/01 | 6U0121251C | | | | |
| 1.3,1.3 i | 6U1/371/375/385/475 485 ; 6U5/375/385/475/485 ; 6U6/135/175/185 6UFF85 ; 6U7/135/175/185 | E | 1289 | AMG,AMH,AMJ | M | + | TSW | 01/98 ▸ 08/01 | 6U0121251 | 730375 | 490 | 285 | CBS |
| 1.3 i | 6U1371 | E | 1289 | AMG | M | - | TSW | 10/94 ▸ 07/95 | 115610501 | 730375 | 490 | 285 | CBS |
| 1.3 i | 6UFF85 | E | 1289 | AMH | M | - | | 01/98 ▸ 08/01 | 6U0121253 | | 590 | 285 | ALM |
| 1.3,1.3 i | 6U5485 ; 6U7135 6U1/371/475 | E | 1289 | AMG,AMH,AMJ | M | - | | 01/98 ▸ 08/01 | 6U0121251C | | | | |
| 1.6 i | 6U53C5 | E | 1598 | AEE | M | + | | 06/95 ▸ 07/96 | 6U0121251C | | | | |
| 1.6 i | 6U1/3C5/3G5/4C5/4G5 ; 6U5/3C5/3G5/4C5/4G5 6U6/1C5/1G5 ; 6UFFG5 ; 6U7/1C5/1G5 | E | 1598 | AEE | M | + | TSW | 01/98 ▸ 08/01 | 6U0121253A | 732479 | 590 | 322 | ALM |
| 1.6 i | 6U53C5 | E | 1598 | AEE | M | - | TSW | 06/95 ▸ 07/96 | 6U0121251 | 730375 | 490 | 285 | CBS |
| 1.6 i | 6U53C5 | E | 1598 | AEE | M | - | TSW | 06/95 ▸ 07/95 | 115610501 | 730375 | 490 | 285 | CBS |
| 1.6 i | 6U53C5 | E | 1598 | AEE | M | - | | 08/95 ▸ 07/96 | 6U0121251C | | | | |
| 1.6 i | 6U1/3C5/3G5/4C5/4G5 ; 6U5/3C5/3G5/4C5/4G5 6U6/1C5/1G5 ; 6UFFG5 ; 6U7/1C5/1G5 | E | 1598 | AEE | M | - | | 01/98 ▸ 08/01 | 6U0121253 | | 590 | 285 | ALM |
| 1.9 D | 6U1/3H5/4H5 ; 6U61H5 ; 6U71H5 ; 6UFFH5 ; 6U5 3H5/4H5 | D | 1896 | AEF | M | + | TSW | 01/98 ▸ 08/01 | 6U0121253A | 732479 | 590 | 322 | ALM |

## FORMAN

| | | | | | | | | | | | | | |
|---|---|---|---|---|---|---|---|---|---|---|---|---|---|
| 1.3 | | E | 1289 | 135,781135B | M | - | PC+,TSW | 11/90 ▸ 07/95 | 115610501 | 730375 | 490 | 285 | CBS |
| 1.3 | | E | 1289 | 135,781135B | M | - | PC-,TSW | 11/90 ▸ 07/95 | 6U0121251 | 730375 | 490 | 285 | CBS |

## OCTAVIA (96>2000)

| | | | | | | | | | | | | | |
|---|---|---|---|---|---|---|---|---|---|---|---|---|---|
| 1.4 i | 1U21A4 | E | 1390 | AMD | M | - | TSW | 02/99 ▸ 07/00 | 1J0121253G | •736083 | 430 | 414 | ALM |
| 1.4 i | 1U21A4 | E | 1390 | AMD | M | - | TSW | 02/99 ▸ 07/00 | 1J0121253G | 731607 | 430 | 414 | ALM |
| 1.4 i | 1U21A4 | E | 1390 | AMD | M | | TSW | 02/99 ▸ 07/00 | 1J0121253P | 731606 | 414,5 | 650 | ALM |
| 1.6 i | 1U2/2E4/2L4/3L4 ; 1U5/1E4/1F4/2E4/2F4/3E4 | E | 1595 | AEH | M | + | TSW | 04/97 ▸ 07/00 | 1J0121253N | 732175 | 650 | 414,5 | ALM |
| 1.6 i | 1U5/2E4/3E4/3F4 | E | 1595 | AEH | M | + | TSW | 05/98 ▸ 07/00 | 1J0121253AD | 731606 | 414,5 | 650 | ALM |
| 1.6 i | 1U2/2E4/2L4/3L4 ; 1U5/1E4/1F4/2E4/2F4/3E4 | E | 1595 | AEH | M | - | TSW | 02/97 ▸ 07/00 | 1J0121253AD | 731606 | 414,5 | 650 | ALM |
| 1.6 i | 1U2/2E4/2L4/3L4 ; 1U5/1E4/1F4/2E4/2F4/3E4 | E | 1595 | AEH | M | - | TSW | 04/97 ▸ 07/00 | 1J0121253P | 731606 | 414,5 | 650 | ALM |
| 1.6 i | 1U5/2E4/3E4/3F4 | E | 1595 | AEH | M | - | TSW | 05/98 ▸ 07/00 | 1J0121253N | 732175 | 650 | 414,5 | ALM |
| 1.6 i | 1U22L4 | E | 1595 | AEH | M | | TSW | 02/97 ▸ 12/97 | 1J0121253P | 731606 | 414,5 | 650 | ALM |
| 1.6 i | 1U22L4 | E | 1595 | AEH | M | | TSW | 02/97 ▸ 12/97 | 1J0121253N | 732175 | 650 | 414,5 | ALM |
| 1.6 i | 1U2/2L3/3L3 ; 1U5/2E3/2L3/3L3 | E | 1595 | AEH,AKL | A | + | TSW | 02/97 ▸ 07/00 | 1J0121253P | 731606 | 414,5 | 650 | ALM |
| 1.6 i | 1U5/2F3/3E3/3F3 | E | 1595 | AEH,AKL | A | + | TSW | 08/98 ▸ 07/00 | 1J0121253N | 732175 | 650 | 414,5 | ALM |
| 1.6 i | 1U2/2L3/3L3 ; 1U5/2E3/2L3/3L3 | E | 1595 | AEH,AKL | A | - | TSW | 02/97 ▸ 07/00 | 1J0121253N | 732175 | 650 | 414,5 | ALM |
| 1.6 i | 1U5/2F3/3E3/3F3 | E | 1595 | AEH,AKL | A | - | TSW | 08/98 ▸ 07/00 | 1J0121253AD | 731606 | 414,5 | 650 | ALM |
| 1.6 i | 1U51D4 ; 1U2/1D4/2D4 | E | 1598 | AEE | M | + | TSW | 10/96 ▸ 07/00 | 1J0121253P | 731606 | 414,5 | 650 | ALM |
| 1.6 i | 1U2/1D4/2D4 | E | 1598 | AEE | M | + | TSW | 10/96 ▸ 07/00 | 1J0121253AD | 731606 | 414,5 | 650 | ALM |
| 1.6 i | 1U51D4 ; 1U2/1D4/2D4 | E | 1598 | AEE | M | - | TSW | 10/96 ▸ 07/00 | 1J0121253G | •736083 | 430 | 414 | ALM |
| 1.6 i | 1U51D4 ; 1U2/1D4/2D4 | E | 1598 | AEE | M | - | TSW | 10/96 ▸ 07/00 | 1J0121253G | 731607 | 430 | 414 | ALM |
| 1.8 i Turbo 20V Y-425 001 ▸ | 1U5/4Q4/4S4 | E | 1781 | AGU,ARZ | M | +/- | TSW | 06/00 ▸ 07/00 | 1J0121253AD | 731606 | 414,5 | 650 | ALM |
| 1.8 i 20V | 1U23P4 | E | 1781 | AGN | M | + | TSW | 10/96 ▸ 04/99 | 1J0121253AD | 731606 | 414,5 | 650 | ALM |
| 1.8 i 20V | 1U5/2R4/3R4 | E | 1781 | AGN | M | + | TSW | 05/98 ▸ 04/99 | 1J0121253N | 732175 | 650 | 414,5 | ALM |

# SKODA (.../...)

## OCTAVIA (96>2000) (.../...)

| | | CC | | | AC | | | OE | Valeo | DIM. | TECH |
|---|---|---|---|---|---|---|---|---|---|---|---|
| 1.8 i 20V | 1U23P4 | E | 1781 | AGN | M | - | TSW | 10/96 ▸ 04/99 | 1J0121253N | **732175** | 650 414,5 | ALM |
| 1.8 i 20V,1.8 i Turbo 20V | 1U2/4Q4/4S4 ; 1U5 2R4/3Q4/3R4/4Q4 | E | 1781 | AGN,AGU,ARZ | M | - | TSW | 05/98 ▸ 07/00 | 1J0121253P | **731606** | 414,5 650 | ALM |
| 1.8 i 20V,1.8 i Turbo 20V | 1U2/4Q4/4S4 ; 1U5 2R4/3Q4/3R4 | E | 1781 | AGN,AGU,ARZ | M | - | TSW | 05/98 ▸ 07/00 | 1J0121253AD | **731606** | 414,5 650 | ALM |
| 1.8 i 20V<br>Y-425 001 ▸ | 1U2/4Q4/4S4 | E | 1781 | AGU,ARZ | M | | | 01/99 ▸ 07/00 | 6U0121251C | | | |
| 1.8 i Turbo 20V<br>Y-425 001 ▸ | 1U54Q3 | E | 1781 | AGU | A | +/- | TSW | 06/00 ▸ 07/00 | 1J0121253AD | **731606** | 414,5 650 | ALM |
| 1.8 i 20V | 1U23P3 | E | 1781 | AGN | A | + | TSW | 06/97 ▸ 04/99 | 1J0121253N | **732175** | 650 414,5 | ALM |
| 1.8 i 20V | 1U2/3P3 ; 1U5/2P3 3P3 | E | 1781 | AGN | A | + | TSW | 03/98 ▸ 04/99 | 1J0121253AD | **731606** | 414,5 650 | ALM |
| 1.8 i 20V,1.8 i Turbo 20V | 1U23P3 ; 1U53Q3 | E | 1781 | AGN,AGU | A | - | TSW | 06/97 ▸ 07/00 | 1J0121253AD | **731606** | 414,5 650 | ALM |
| 1.8 i 20V,1.8 i Turbo 20V | 1U2/3P3 ; 1U5/3Q3 4Q3 | E | 1781 | AGN,AGU | A | - | TSW | 06/97 ▸ 07/00 | 1J0121253P | **731606** | 414,5 650 | ALM |
| 1.8 i 20V | 1U2/3P3 ; 1U5/2P3 3P3 | E | 1781 | AGN | A | - | TSW | 03/98 ▸ 04/99 | 1J0121253N | **732175** | 650 414,5 | ALM |
| 1.8 i 20V,1.8 i Turbo 20V<br>▸ Y-425 000 | 1U2/4Q4/4S4 ; 1U5 3Q4/4Q4/4S4 | E | 1781 | AGU,ARZ | M | | TSW | 08/98 ▸ 06/00 | 1J0121253P | **731606** | 414,5 650 | ALM |
| 1.8 i Turbo 20V<br>▸ Y-425 000 | 1U5/3Q3/4Q3 | E | 1781 | AGU | A | | TSW | 08/98 ▸ 06/00 | 1J0121253P | **731606** | 414,5 650 | ALM |
| 2.0 i | 1U23N4 | E | 1984 | AQY | M | + | TSW | 05/99 ▸ 07/00 | 1J0121253AD | **731606** | 414,5 650 | ALM |
| 2.0 i | 1U5/2TX/3TX | E | 1984 | AZH | M | + | TSW | 11/99 ▸ 07/00 | 1J0121253N | **732175** | 650 414,5 | ALM |
| 2.0 i | 1U23N4 | E | 1984 | AQY | M | - | TSW | 05/99 ▸ 07/00 | 1J0121253N | **732175** | 650 414,5 | ALM |
| 2.0 i | 1U5/2TX/3TX | E | 1984 | AZH | M | - | TSW | 11/99 ▸ 07/00 | 1J0121253AD | **731606** | 414,5 650 | ALM |
| 2.0 i | 1U5/2TX/3TX | E | 1984 | ATF | M | | TSW | 11/99 ▸ 07/00 | 1J0121253AD | **731606** | 414,5 650 | ALM |
| 2.0 i | 1U5/2TX/3TX | E | 1984 | ATF | M | | TSW | 11/99 ▸ 07/00 | 1J0121253N | **732175** | 650 414,5 | ALM |
| 2.0 i | 1U23N3 | E | 1984 | APK,AQY | A | + | TSW | 05/99 ▸ 07/00 | 1J0121253P | **731606** | 414,5 650 | ALM |
| 2.0 i | 1U23N3 | E | 1984 | APK,AQY | A | - | TSW | 05/99 ▸ 07/00 | 1J0121253N | **732175** | 650 414,5 | ALM |
| 1.9 SDi,1.9 TDi | 1U2/274/374/384/394 484/494 ; 1U5/164/274/374/37X/384/484/494 | D | 1896 | AGP,AGR,AHF,ASV | M | + | TSW | 10/96 ▸ | 1J0121253N | **732175** | 650 414,5 | ALM |
| 1.9 SDi,1.9 TDi | 1U2/164/264 ; 1U5 274/27X/374/774 | D | 1896 | AGP,AGR | M | + | TSW | 05/97 ▸ 07/00 | 1J0121253AD | **731606** | 414,5 650 | ALM |
| 1.9 SDi,1.9 TDi | 1U2/274/374/384/394 484/494 ; 1U5/164/274/374/37X/384/484/494 | D | 1896 | AGP,AGR,AHF,ASV | M | - | TSW | 10/96 ▸ | 1J0121253P | **731606** | 414,5 650 | ALM |
| 1.9 SDi,1.9 TDi | 1U2/164/264 ; 1U5 274/27X/374/774 | D | 1896 | AGP,AGR | M | - | TSW | 05/97 ▸ 07/00 | 1J0121253N | **732175** | 650 414,5 | ALM |
| 1.9 TDi | 1U2/394/484/494 1U5/484/494 | D | 1896 | AHF,ASV | M | | TSW | 05/97 ▸ 07/00 | 1J0121253P | **731606** | 414,5 650 | ALM |
| 1.9 TDi | 1U2/394/484/494 1U5/484/494 | D | 1896 | AHF,ASV | M | | TSW | 05/97 ▸ 07/00 | 1J0121253N | **732175** | 650 414,5 | ALM |
| 1.9 TDi | 1U2383 | D | 1896 | AHF | A | + | TSW | 08/97 ▸ 07/00 | 1J0121253N | **732175** | 650 414,5 | ALM |
| 1.9 TDi | 1U2383 | D | 1896 | AHF | A | - | TSW | 08/97 ▸ 07/00 | 1J0121253P | **731606** | 414,5 650 | ALM |

## OCTAVIA (2000>2004)

| | | | | | | | | | | | |
|---|---|---|---|---|---|---|---|---|---|---|---|
| 1.4 i,1.4 i 16V | 1U52B4 ; 1U2/1A4/1B4 2A4/2B4 | E | 1390 | AMD,AXP | M | +/- | TSW | 08/00 ▸ | 1J0121253G | •**736083** | 430 414 | ALM |
| 1.4 i | 1U2/1A4/2A4 | E | 1390 | AMD | M | +/- | TSW | 08/00 ▸ 03/01 | 1J0121253AD | **731606** | 414,5 650 | ALM |
| 1.4 i,1.4 i 16V | 1U52B4 ; 1U2/1A4/1B4 2A4/2B4 | E | 1390 | AMD,AXP | M | +/- | TSW | 08/00 ▸ | 1J0121253G | **731607** | 430 414 | ALM |
| 1.4 i,1.4 i 16V | 1U2/1A4/1B4/2A4/2B4 1U5/1B4/2B4 | E | 1390 | AMD,AXP,BCA | M | +/- | TSW | 08/00 ▸ | 1J0121253N | **732175** | 650 414,5 | ALM |
| 1.4 i 16V | 1U52B4 ; 1U2/1B4/2B4 | E | 1390 | BCA | M | + | TSW | 01/02 ▸ 12/10 | 1J0121253AD | **731606** | 414,5 650 | ALM |
| 1.4 i,1.4 i 16V | 1U2/1A4/1B4/2A4/2B4 1U5/1B4/2B4 | E | 1390 | AMD,AXP,BCA | M | | TSW | 08/00 ▸ | 1J0121253G | **731607** | 430 414 | ALM |
| 1.4 i,1.4 i 16V | 1U2/1A4/1B4/2A4/2B4 1U5/1B4/2B4 | E | 1390 | AMD,AXP,BCA | M | | TSW | 08/00 ▸ | 1J0121253G | •**736083** | 430 414 | ALM |
| 1.4 i 16V | 1U2/1B4/2B4 ; 1U5 1B4/2B4 | E | 1390 | AXP | M | | TSW | 08/00 ▸ 01/02 | 1J0121253AD | **731606** | 414,5 650 | ALM |
| 1.6 i | 1U2/1E4/1G4/2E4/2G4/3E4/3G4 ; 1U5/1E4/1G4 2E4/2G4/3E4/3G4 | E | 1595 | AEH,AKL,BFQ | M | +/- | TSW | 08/00 ▸ 12/10 | 1J0121253AD | **731606** | 414,5 650 | ALM |
| 1.6 i | 1U2/1E3/1E4/1G4/2E4/2G4/3E4/3G4 ; 1U5/1E4 1G4/2E4/2G4/3E4/3G4 | E | 1595 | AEH,AKL,AVU | M | +/- | TSW | 08/00 ▸ | 1J0121253N | **732175** | 650 414,5 | ALM |
| 1.6 i | 1U21E3 | E | 1595 | AEH | M | + | TSW | 08/00 ▸ 05/07 | 1J0121253AD | **731606** | 414,5 650 | ALM |
| 1.6 i | 1U2/1G4/2G4/3G4 ; 1U5/1G4/2G4/3G4 | E | 1595 | AVU | M | | TSW | 08/00 ▸ 04/02 | 1J0121253AD | **731606** | 414,5 650 | ALM |
| 1.6 i | 1U2/1E3/1E4/1G4/2G4/3G4 ; 1U5/1G4/2G4/3G4 | E | 1595 | AEH,AKL,AVU,BFQ | M | | TSW | 08/00 ▸ | 1J0121253N | **732175** | 650 414,5 | ALM |
| 1.6 i<br>1U-2-578 322, 1U-2578 322 ▸ | 1U2/1E3/1E4/2E4/3E4 ; 1U5/1E4/2E4/3E4 | E | 1595 | AEH,AKL | M | | TSW | 09/01 ▸ 05/07 | 1J0121253G | **731607** | 430 414 | ALM |

Radiator Radiateur Motorkühler Radiatore di raffreddamento Radiator Radyatör Radiador Радиатор vízhűtő Vodní chladič Radiator Ψυγείο



• **New** Nouveau **Nuevo** Novo **Nuovo** Nieuw **Neu** Nowość **Yeni** Новый Νέο **Nový**

## OCTAVIA (2000>2004) (.../...)

| | | | | | | | | | | | | |
|---|---|---|---|---|---|---|---|---|---|---|---|---|
| 1.6 i | 1U2/1E3/1E4/2E4/3E4 ; 1U5/1E4/2E4/3E4 1U-2-578 322, 1U-2578 322 ▸ | E | 1595 | AEH,AKL | M | | TSW | 09/01 ▸ 05/07 | 1J0121253G | •736083 | 430 414 | ALM |
| 1.6 i | 1U2/1G3/2E3/2G3/3E3/3G3 ; 1U5/1E3/1G3/2E3 2G3/3E3/3G3 | E | 1595 | AKL,AVU,BFQ | A | +/- | TSW | 08/00 ▸ | 1J0121253N | 732175 | 650 414,5 | ALM |
| 1.6 i | 1U52G3 ; 1U2/2G3/3G3 | E | 1595 | AVU | A | +/- | TSW | 08/00 ▸ | 1J0121253P | 731606 | 414,5 650 | ALM |
| 1.6 i | 1U2/1E3/1G3/2E3/2G3/3E3/3G3 ; 1U5/1E3/1G3 2E3/2G3/3E3/3G3 | E | 1595 | AEH,AKL,AVU,BFQ | A | +/- | TSW | 08/00 ▸ 12/07 | 1J0121253AD | 731606 | 414,5 650 | ALM |
| 1.6 i | 1U53G3 | E | 1595 | AVU | A | + | TSW | 08/00 ▸ | 1J0121253P | 731606 | 414,5 650 | ALM |
| 1.6 i | 1U52G3 ; 1U2/2G3/3G3 | E | 1595 | AVU | A | + | TSW | 08/00 ▸ | 1J0121253N | 732175 | 650 414,5 | ALM |
| 1.6 i | 1U53G3 | E | 1595 | AVU | A | + | TSW | 08/00 ▸ 04/02 | 1J0121253AD | 731606 | 414,5 650 | ALM |
| 1.6 i | 1U2/1E3/2E3/2G3/3E3/3G3 ; 1U5/1E3/2E3/2G3 3E3/3G3 | E | 1595 | AEH,AVU | A | | TSW | 08/00 ▸ 05/07 | 1J0121253N | 732175 | 650 414,5 | ALM |
| 1.6 i | 1U2/1D4/2D4 ; 1U5/1D4/2D4 | E | 1598 | AEE | M | +/- | TSW | 08/00 ▸ | 1J0121253G | 731607 | 430 414 | ALM |
| 1.6 i | 1U2/1D4/2D4 ; 1U5/1D4/2D4 | E | 1598 | AEE | M | +/- | TSW | 08/00 ▸ | 1J0121253G | •736083 | 430 414 | ALM |
| 1.6 i | 1U2/1D4/2D4 ; 1U5/1D4/2D4 | E | 1598 | AEE | M | +/- | TSW | 08/00 ▸ 09/04 | 1J0121253N | 732175 | 650 414,5 | ALM |
| 1.6 i | 1U2/1D4/2D4 ; 1U5/1D4/2D4 | E | 1598 | AEE | M | | TSW | 08/00 ▸ 09/04 | 1J0121253AD | 731606 | 414,5 650 | ALM |
| 1.6 i | 1U2/1D4/2D4 ; 1U5/1D4/2D4 | E | 1598 | AEE | M | | TSW | 08/00 ▸ 09/04 | 1J0121253G | 731607 | 430 414 | ALM |
| 1.6 i | 1U2/1D4/2D4 ; 1U5/1D4/2D4 | E | 1598 | AEE | M | | TSW | 08/00 ▸ 09/04 | 1J0121253G | •736083 | 430 414 | ALM |
| 1.8 20V,1.8 i Turbo 20V | 1U2/1Q4/1QX/2Q4/2QX 3Q4/3QX/4Q4/4QX/5Q4/5R4/PQ4 ; 1U5/1Q4/1QX 2Q4/2QX/3Q4/3QX/4Q4/4QX/5R4 | E | 1781 | AGU,ARX,ARZ,AUM,AUQ | M | +/- | TSW | 08/00 ▸ 12/10 | 1J0121253AD | 731606 | 414,5 650 | ALM |
| 1.8 20V,1.8 i Turbo 20V | 1U2/1Q4/1QX/2Q4/2QX 3Q4/3QX/4Q4/4QX/5Q4/5R4/PQ4 ; 1U5/1Q4/1QX 2Q4/2QX/3Q4/3QX/4Q4/4QX/5R4 | E | 1781 | AGU,ARX,ARZ,AUM,AUQ | M | +/- | TSW | 08/00 ▸ | 1J0121253N | 732175 | 650 414,5 | ALM |
| 1.8 i Turbo 20V | 1U2/1Q3/2Q3/3Q3/4Q3 1U5/1Q3/2Q3/3Q3/4Q3 | E | 1781 | AGU,ARX,AUM | A | +/- | TSW | 08/00 ▸ 01/06 | 1J0121253N | 732175 | 650 414,5 | ALM |
| 1.8 i Turbo 20V | 1U2/1Q3/2Q3/3Q3/4Q3 1U5/1Q3/2Q3/3Q3/4Q3 | E | 1781 | AGU,ARX,AUM | A | +/- | TSW | 08/00 ▸ 01/06 | 1J0121253AD | 731606 | 414,5 650 | ALM |
| 2.0 i | 1U2/1N4/2N4/3N4 ; 1U5/1N4/2N4/2TX/3N4/3TX | E | 1984 | AEG,APK,AQY,AZH | M | +/- | TSW | 08/00 ▸ | 1J0121253N | 732175 | 650 414,5 | ALM |
| 2.0 i | 1U2/1T4/2N4/2T4/3N4/3T4 ; 1U5/1T4/1TX/2N4 2T4/2TX/3N4/3T4/3TX | E | 1984 | AEG,APK,AQY,AZH,AZJ | M | +/- | TSW | 08/00 ▸ 01/06 | 1J0121253AD | 731606 | 414,5 650 | ALM |
| 2.0 i | 1U51N4 ; 1U2/1N4/2M4/3M4 | E | 1984 | AEG,APK,AQY | M | + | TSW | 08/00 ▸ 05/07 | 1J0121253AD | 731606 | 414,5 650 | ALM |
| 2.0 i | 1U2/1N4/1T4/2M4/2N4/2T4/3M4/3N4/3T4 ; 1U5 1N4/1T4/1TX/2N4/2T4/2TX/3N4/3T4/3TX | E | 1984 | AEG,APK,AQY,AZH,AZJ | M | | TSW | 08/00 ▸ 05/07 | 1J0121253N | 732175 | 650 414,5 | ALM |
| 2.0 i | 1U2/1N3/1T3/2N3/2T3/3N3/3T3 ; 1U5/1N3/1T3 2N3/2T3/3N3/3T3 | E | 1984 | AEG,APK,AQY,AZJ | A | +/- | TSW | 08/00 ▸ | 1J0121253N | 732175 | 650 414,5 | ALM |
| 2.0 i | 1U2/1N3/1T3/2N3/2T3/3N3/3T3 ; 1U5/1N3/1T3 2N3/2T3/3N3/3T3 | E | 1984 | AEG,APK,AQY,AZJ | A | +/- | TSW | 08/00 ▸ 05/07 | 1J0121253AD | 731606 | 414,5 650 | ALM |
| 2.0 i | 1U2/2N3/3N3 ; 1U5/2N3/3N3 | E | 1984 | AEG,APK | A | | TSW | 08/00 ▸ 09/04 | 1J0121253N | 732175 | 650 414,5 | ALM |
| 1.9 D,1.9 TDi | 1U2/154/164/174/184 264/274/284/295/374/384/395/474/484/495/P84 1U5/154/15Y/164/174/184/25Y/264/274/27X/284 295/35Y/374/37X/384/394/395/484/495 | D | 1896 | AGR,AHF,ALH,AQM,ASV,ASZ,ATD AXR | M | +/- | TSW | 08/00 ▸ 12/10 | 1J0121253AD | 731606 | 414,5 650 | ALM |
| 1.9 D,1.9 TDi | 1U2/154/164/174/264 274/374 ; 1U5/154/15Y/164/174/25Y/264/274 27X/284/35Y/374/37X/384/394/484 | D | 1896 | AGR,AHF,ALH,AQM,ASV,ATD,AXR | M | +/- | TSW | 08/00 ▸ | 1J0121253N | 732175 | 650 414,5 | ALM |
| 1.9 TDi | 1U2/295/395/495 1U5/295/395/495 | D | 1896 | ASZ | M | + | TSW | 09/02 ▸ 09/04 | 1J0121253N | 732175 | 650 414,5 | ALM |
| 1.9 D,1.9 TDi | 1U2/154/164/174/184 264/274/284/374/384/474/484/P84 ; 1U5/154 164/174/184/25Y/264/274/27X/284/35Y/374/37X 384/394/484 | D | 1896 | AGR,AHF,ALH,AQM,ASV,ATD,AXR | M | | TSW | 08/00 ▸ | 1J0121253N | 732175 | 650 414,5 | ALM |
| 1.9 TDi | 1U2/173/273/373/473 1U5/173/273/373 | D | 1896 | ALH | A | +/- | TSW | 08/00 ▸ | 1J0121253N | 732175 | 650 414,5 | ALM |
| 1.9 TDi | 1U2/173/273/373/473 1U5/173/273/373 | D | 1896 | ALH | A | +/- | TSW | 08/00 ▸ 12/07 | 1J0121253AD | 731606 | 414,5 650 | ALM |
| 1.9 TDi | 1U2/273/373 ; 1U5 273/373 | D | 1896 | ALH | A | | TSW | 08/00 ▸ 09/04 | 1J0121253N | 732175 | 650 414,5 | ALM |

## OCTAVIA (2004>2008)

| | | | | | | | | | | | | |
|---|---|---|---|---|---|---|---|---|---|---|---|---|
| 1.4 i 16V | 1Z3/1B4/2B4 ; 1Z5 1B4/2B4 | E | 1390 | BCA | M | +/- | TSW | 05/04 ▸ 05/06 | 1K0121251P | 734332 | 640 414,5 | ALM |
| 1.4 i 16V | 1Z3/1B4/1C4/2B4/2C4 1Z5/1B4/1C4/2B4/2C4 | E | 1390 | BCA,BUD | M | +/- | TSW | 05/04 ▸ 10/08 | 1K0121251BR | 734335 | 640 414,5 | ALM |
| 1.4 i 16V | 1Z3/1B4/2B4 | E | 1390 | BCA | M | + | TSW | 05/04 ▸ 05/06 | 1K0121251F | 734335 | 640 414,5 | ALM |
| 1.4 i 16V | 1Z3/1B4/2B4 ; 1Z5 1B4/2B4 | E | 1390 | BCA | M | + | TSW | 05/04 ▸ | 1K0121251E | 734335 | 640 414,5 | ALM |
| 1.4 i 16V | 1Z5/1B4/2B4 | E | 1390 | BCA | M | | TSW | 05/04 ▸ 05/06 | 1K0121251F | 734335 | 640 414,5 | ALM |
| 1.4 i 16V | 1Z3/1C4/2C4 ; 1Z5 1C4/2C4 | E | 1390 | BUD | M | | TSW | 05/06 ▸ 10/08 | 1K0121251P | 734332 | 640 414,5 | ALM |

# SKODA (.../...)

## OCTAVIA (2004>2008) (.../...)

| | | | CC | | | AC | | | OE | Valeo | DIM. | TECH |
|---|---|---|---|---|---|---|---|---|---|---|---|---|
| 1.6 i | 1Z3/1G4/2G4/3G4 ; 1Z5/1G4/2G4/3G4 | E | 1595 | BGU,BSE,BSF | M | +/- | TSW | 05/04 ▸ 10/08 | 1K0121251BR | **734335** | 640 414,5 | ALM |
| 1.6 i | 1Z3/1G4/2G4/3G4 ; 1Z5/1G4/2G4/3G4 | E | 1595 | BGU,BSE,BSF | M | +/- | TSW | 05/04 ▸ 10/08 | 1K0121251P | **734332** | 640 414,5 | ALM |
| 1.6 i | 1Z3/1G4/2G4/3G4 ; 1Z5/1G4/2G4/3G4 | E | 1595 | BGU | M | + | TSW | 05/04 ▸ 05/05 | 1K0121251F | **734335** | 640 414,5 | ALM |
| 1.6 i | 1Z3/1G4/2G4/3G4 ; 1Z5/1G4/2G4/3G4 | E | 1595 | BGU,BSE,BSF | M | + | TSW | 05/04 ▸ | 1K0121251E | **734335** | 640 414,5 | ALM |
| 1.6 i | 1Z3/1GC/2GC/3GC ; 1Z5/1GC/2GC/3GC | E | 1595 | BGU,BSE,BSF | A | +/- | TSW | 08/04 ▸ 10/08 | 1K0121251BR | **734335** | 640 414,5 | ALM |
| 1.6 i | 1Z3/1GC/2GC/3GC ; 1Z5/1GC/2GC/3GC | E | 1595 | BGU,BSE,BSF | A | +/- | TSW | 08/04 ▸ | 1K0121251P | **734332** | 640 414,5 | ALM |
| 1.6 i | 1Z3/1GC/2GC/3GC ; 1Z5/1GC/2GC/3GC | E | 1595 | BGU | A | + | TSW | 08/04 ▸ | 1K0121251F | **734335** | 640 414,5 | ALM |
| 1.6 i | 1Z51GC | E | 1595 | BGU | A | | TSW | 08/04 ▸ 05/05 | 1K0121251F | **734335** | 640 414,5 | ALM |
| 1.6 FSi 16V | 1Z3/1K4/2K4/3K4<br>1Z5/1K4/2K4/3K4 | E | 1598 | BLF | M | +/- | TSW | 05/04 ▸ 10/08 | 1K0121251P | **734332** | 640 414,5 | ALM |
| 1.6 FSi 16V | 1Z3/1K4/2K4/3K4<br>1Z5/1K4/2K4/3K4 | E | 1598 | BLF | M | +/- | TSW | 05/04 ▸ 10/08 | 1K0121251BR | **734335** | 640 414,5 | ALM |
| 1.6 FSi 16V | 1Z3/1K4/2K4/3K4<br>1Z5/1K4/2K4/3K4 | E | 1598 | BLF | M | + | TSW | 05/04 ▸ 10/08 | 1K0121251F | **734335** | 640 414,5 | ALM |
| 1.6 FSi 16V | 1Z3/1KC/2KC/3KC<br>1Z5/1KC/2KC/3KC | E | 1598 | BLF | A | +/- | TSW | 08/04 ▸ 10/08 | 1K0121251P | **734332** | 640 414,5 | ALM |
| 1.6 FSi 16V | 1Z3/1KC/2KC/3KC<br>1Z5/1KC/2KC/3KC | E | 1598 | BLF | A | +/- | TSW | 08/04 ▸ 10/08 | 1K0121251BR | **734335** | 640 414,5 | ALM |
| 1.6 FSi 16V | 1Z3/1KC/2KC/3KC<br>1Z5/1KC/2KC/3KC | E | 1598 | BLF | A | + | TSW | 08/04 ▸ | 1K0121251E | **734335** | 640 414,5 | ALM |
| 1.6 FSi 16V | 1Z3/1KC/2KC/3KC<br>1Z5/1KC/2KC/3KC | E | 1598 | BLF | A | + | TSW | 08/04 ▸ 10/08 | 1K0121251F | **734335** | 640 414,5 | ALM |
| 2.0 FSi 16V | 1Z3/2N5/3N5 ; 1Z5<br>2N5/3N5/ANY | E | 1984 | BLR,BLX,BLY,BVY,BVZ | M | +/- | TSW | 11/04 ▸ 10/08 | 1K0121251AR | **735120** | 650 414,5 | ALM |
| 2.0 FSi 16V | 1Z3/2N5/3N5 ; 1Z5<br>2N5/3N5 | E | 1984 | BLR,BVY,BVZ | M | +/- | TSW | 11/04 ▸ 10/08 | 1K0121251CJ | **735120** | 650 414,5 | ALM |
| 2.0 FSi 16V | 1Z3/2N5/3N5 ; 1Z5<br>2N5/3N5/ANY | E | 1984 | BLX,BLY,BVY | M | +/- | TSW | 11/04 ▸ | 1K0121251E | **734335** | 640 414,5 | ALM |
| 2.0 TFSi 16V | 1Z55R5 | E | 1984 | BWA | M | +/- | Air Seal | 10/05 ▸ 10/08 | 1K0121251DM | **734333** | 650 454,3 | ALB |
| 2.0 FSi 16V | 1Z3/2N5/3N5 ; 1Z5<br>2N5/3N5 | E | 1984 | BLR | M | + | TSW | 11/04 ▸ | 1K0121251E | **734335** | 640 414,5 | ALM |
| 2.0 FSi 16V | 1Z3/2N5/3N5/4N5<br>1Z5/2N5/3N5/4N5/ANY/BNY/CNY/SNY | E | 1984 | BLX,BLY,BVX,BVY,BVZ | M | + | TSW | 11/04 ▸ 10/08 | 1K0121251CJ | **735120** | 650 414,5 | ALM |
| 2.0 TFSi 16V | 1Z35R5 | E | 1984 | BWA | M | | Air Seal | 10/05 ▸ 10/08 | 1K0121251AB | **734333** | 650 454,3 | ALB |
| 2.0 FSi 16V | 1Z5ANY | E | 1984 | BVX | M | | TSW | 11/05 ▸ | 1K0121251E | **734335** | 640 414,5 | ALM |
| 2.0 FSi 16V | 1Z3/4N5 ; 1Z5/4N5<br>ANY/BNY/CNY/SNY | E | 1984 | BVX,BVY,BVZ | M | | TSW | 11/05 ▸ 10/08 | 1K0121251AR | **735120** | 650 414,5 | ALM |
| 2.0 FSi 16V | 1Z3/2NC/3NC | E | 1984 | BLY,BVY | A | +/- | TSW | 11/04 ▸ | 1K0121251E | **734335** | 640 414,5 | ALM |
| 2.0 FSi 16V | 1Z3/2NC/3NC ; 1Z5<br>2NC/3NC | E | 1984 | BLR,BLY,BVY,BVZ | A | +/- | TSW | 11/04 ▸ 10/08 | 1K0121251AR | **735120** | 650 414,5 | ALM |
| 2.0 FSi 16V | 1Z3/2NC/3NC ; 1Z5<br>2NC/3NC | E | 1984 | BLR,BVY,BVZ | A | +/- | TSW | 11/04 ▸ 10/08 | 1K0121251CJ | **735120** | 650 414,5 | ALM |
| 2.0 FSi 16V | 1Z3/2NC/3NC ; 1Z5<br>2NC/3NC | E | 1984 | BLR | A | + | TSW | 11/04 ▸ | 1K0121251E | **734335** | 640 414,5 | ALM |
| 2.0 FSi 16V | 1Z5/2NC/3NC | E | 1984 | BLY | A | + | TSW | 11/04 ▸ 11/05 | 1K0121251AR | **735120** | 650 414,5 | ALM |
| 2.0 FSi 16V | 1Z3/2NC/3NC/4NC<br>1Z5/2NC/3NC/4NC | E | 1984 | BLY,BVY,BVZ | A | + | TSW | 11/04 ▸ 10/08 | 1K0121251CJ | **735120** | 650 414,5 | ALM |
| 2.0 FSi 16V | 1Z34NC ; 1Z54NC | E | 1984 | BVY,BVZ | A | | TSW | 11/05 ▸ 10/08 | 1K0121251AR | **735120** | 650 414,5 | ALM |
| 1.9 TDi | 1Z3/164/264/364 | D | 1896 | BJB,BKC | M | +/- | TSW | 05/04 ▸ | 1K0121253H | **732872** | 650 414,5 | ALM |
| 1.9 TDi | 1Z3/164/264/364<br>1Z5/164/264/364/A6Y/B6Y | D | 1896 | BJB,BKC,BXE | M | +/- | TSW | 05/04 ▸ 10/08 | 1K0121253AA | **732872** | 650 414,5 | ALM |
| 1.9 TDi | 1Z5/164/264/364 | D | 1896 | BJB | M | | TSW | 05/04 ▸ | 1K0121253H | **732872** | 650 414,5 | ALM |
| 1.9 TDi | 1Z326C | D | 1896 | BKC | A | +/- | TSW | 08/04 ▸ | 1K0121253H | **732872** | 650 414,5 | ALM |
| 1.9 TDi | 1Z3/16C/26C/36C<br>1Z5/16C/26C/36C | D | 1896 | BKC,BXE | A | +/- | TSW | 08/04 ▸ 10/08 | 1K0121253AA | **732872** | 650 414,5 | ALM |
| 1.9 TDi | 1Z3/16C/36C ; 1Z5<br>16C/26C/36C | D | 1896 | BKC | A | | TSW | 08/04 ▸ | 1K0121253H | **732872** | 650 414,5 | ALM |
| 2.0 TDi 16V | 1Z3/47C/485 ; 1Z5<br>475/485 | D | 1968 | AZV,BKD | M | +/- | Air Seal | 05/04 ▸ 10/08 | 1K0121251N | **734333** | 650 454,3 | ALB |
| 2.0 TDi 16V | 1Z3/275/285/375/385<br>47C/485 ; 1Z5/275/285/375/385/475/485 | D | 1968 | AZV,BKD | M | +/- | Air Seal | 04/07 ▸ | 1K0121251BK | **734333** | 650 454,3 | ALB |
| 2.0 TDi 16V | 1Z3/275/285/375/385<br>47C/485 ; 1Z5/275/285/375/385/475/485 | D | 1968 | AZV,BKD | M | +/- | Air Seal | 04/07 ▸ 10/08 | 1K0121251DM | **734333** | 650 454,3 | ALB |
| 2.0 TDi 16V | 1Z3/275/285/375/385<br>1Z5/275/285/375/385 | D | 1968 | AZV,BKD | M | | Air Seal | 05/04 ▸ 10/08 | 1K0121251N | **734333** | 650 454,3 | ALB |
| 2.0 TDi 16V | 1Z3/475/48C ; 1Z5<br>47C/48C | D | 1968 | AZV,BKD | A | +/- | Air Seal | 05/04 ▸ 10/08 | 1K0121251N | **734333** | 650 454,3 | ALB |
| 2.0 TDi 16V | 1Z3/27C/28C/37C/38C<br>475/48C ; 1Z5/27C/28C/37C/38C/47C/48C | D | 1968 | AZV,BKD | A | +/- | Air Seal | 04/07 ▸ 10/08 | 1K0121251DM | **734333** | 650 454,3 | ALB |

Radiator Radiateur Motorkühler Radiatore di raffreddamento Radiator Radyatör Radiador Радиатор vízhűtő Vodní chladič Radiator Ψυγείο



• **New** Nouveau **Nuevo** Novo **Nuovo** Nieuw **Neu** Nowość **Yeni** Новый Νέο **Nový**

## OCTAVIA (2004>2008) (.../...)

| | | | | | | | | | | | | | |
|---|---|---|---|---|---|---|---|---|---|---|---|---|---|
| 2.0 TDi 16V | 1Z3/27C/28C/37C/38C 475/48C ; 1Z5/27C/28C/37C/38C/47C/48C | D | 1968 | AZV,BKD | A | +/- | Air Seal | 04/07 ▸ | 1K0121251BK | **734333** | 650 | 454,3 | ALB |
| 2.0 TDi 16V | 1Z3/27C/28C/37C/38C 1Z5/27C/28C/37C/38C | D | 1968 | AZV,BKD | A | | Air Seal | 08/04 ▸ 10/08 | 1K0121251N | **734333** | 650 | 454,3 | ALB |

## OCTAVIA IV (2008>)

| | | | | | | | | | | | | | |
|---|---|---|---|---|---|---|---|---|---|---|---|---|---|
| 1.6 i | 1Z3/1H4/2H4/3H4 ; 1Z5/1H4/2H4/3H4 | F | 1595 | CHGA | M | | TSW | 08/09 ▸ | 1K0121251BR | **734335** | 640 | 414,5 | ALM |
| 1.4 TFSi 16V | 1Z3/1L5/2L5/3L5 1Z5/1L5/2L5/3L5 | E | 1390 | CAXA | M | + | TSW | 11/08 ▸ | 1K0121253BB | **732872** | 650 | 414,5 | ALM |
| 1.4 i 16V | 1Z3/1C4/2C4 ; 1Z5 1C4/2C4 | E | 1390 | BUD | M | | TSW | 11/08 ▸ | 1K0121251BR | **734335** | 640 | 414,5 | ALM |
| 1.4 TFSi 16V | 1Z3/1L5/2L5/3L5 1Z5/1L5/2L5/3L5 | E | 1390 | CAXA | M | | | 11/08 ▸ | 1K0121251BN | **735179** | | | |
| 1.4 TFSi 16V | 1Z3/1LD/2LD/3LD 1Z5/1LD/2LD/3LD | E | 1390 | CAXA | A | + | TSW | 11/08 ▸ | 1K0121253BB | **732872** | 650 | 414,5 | ALM |
| 1.4 TFSi 16V | 1Z3/1LD/2LD/3LD 1Z5/1LD/2LD/3LD | E | 1390 | CAXA | A | | | 11/08 ▸ | 1K0121251BN | **735179** | | | |
| 1.6 i | 1Z3/1G4/2G4/3G4 ; 1Z5/1G4/2G4/2GC/3G4 | E | 1595 | BSE,BSF,CCSA | M | | TSW | 11/08 ▸ | 1K0121251BR | **734335** | 640 | 414,5 | ALM |
| 1.6 i | 1Z3/1GC/2GC/3GC ; 1Z5/1GC/2GC/3GC | E | 1595 | BSE,BSF | A | | TSW | 11/08 ▸ | 1K0121251BR | **734335** | 640 | 414,5 | ALM |
| 1.6 TDi CR 16V | 1Z3/124/221/224/324 1Z5/124/221/224/22Y/324/32Y | D | 1598 | CAYC/F | M | | Air Seal | 06/09 ▸ | 1K0121251DM | **734333** | 650 | 454,3 | ALB |
| 1.6 TDi CR 16V | 1Z3/12D/22D/32D 1Z5/12D/22D/32D | D | 1598 | CAYC/F | A | | Air Seal | 11/09 ▸ | 1K0121251DM | **734333** | 650 | 454,3 | ALB |
| 1.9 TDi PD | 1Z3/164/264/364 1Z5/164/264/26Y/364/36Y | D | 1896 | BJB,BXE | M | | TSW | 11/08 ▸ | 1K0121253AA | **732872** | 650 | 414,5 | ALM |
| 1.9 TDi PD | 1Z3/16C/26C/36C 1Z5/16C/26C/36C | D | 1896 | BXE | A | | TSW | 11/08 ▸ | 1K0121253AA | **732872** | 650 | 414,5 | ALM |
| 2.0 TDi 136 16V<br>2.0 TDi 16V<br>2.0 TDi PD 140 16V | 1Z3/275/285/375/385 475/485/515 ; 1Z5 275/285/375/385/475 485/515 | D | 1968 | AZV,BKD,CEGA/F | M | | Air Seal | 11/08 ▸ | 1K0121251DM | **734333** | 650 | 454,3 | ALB |
| 2.0 TDi 16V | 1Z3515 ; 1Z5515 | D | 1968 | CEGA/F | M | | Air Seal | 03/09 ▸ 06/09 | 1K0121251AB | **734333** | 650 | 454,3 | ALB |
| 2.0 TDi 136 16V<br>2.0 TDi 16V<br>2.0 TDi PD 140 16V | 1Z3/27C/28C/37C/38C 47C/48C/51C ; 1Z5 27C/28C/37C/38C/47C 48C/51C | D | 1968 | AZV,BKD,CEGA/F | A | | Air Seal | 11/08 ▸ | 1K0121251DM | **734333** | 650 | 454,3 | ALB |
| 2.0 TDi 16V | 1Z351C ; 1Z551C | D | 1968 | CEGA/F | A | | Air Seal | 03/09 ▸ 06/09 | 1K0121251AB | **734333** | 650 | 454,3 | ALB |

## ROOMSTER (2006>2010)

| | | | | | | | | | | | | | |
|---|---|---|---|---|---|---|---|---|---|---|---|---|---|
| 1.2 i 12V | 5J7/1D4/1E4/2D4/2E4 3D4/3E4/4D4/4E4/PD4 | E | 1198 | BME-E2,BME-E4,BZG-E4 | M | +/- | TSW | 05/06 ▸ 03/09 | 6Q0121253Q | **732862** | 632 | 414,5 | ALM |
| 1.2 i 12V | 5J7/1D4/1E4/2D4/2E4 3D4/3E4/4D4/4E4/PD4 | E | 1198 | BME-E2,BME-E4,BZG-E4 | M | +/- | TSW | 05/06 ▸ 03/09 | 6Q0121253R | **732864** | 632 | 414,5 | ALM |
| 1.2 i 12V | 5J7/1D4/2D4/3D4/4D4 PD4 | E | 1198 | BZG-E4 | M | +/- | MODULE | 01/07 ▸ 03/09 | 6Q0121201HA | **733062** | 430 | 414,5 | ALM |
| 1.2 i 12V | 5J7/1E4/2E4/3E4/4E4 | E | 1198 | BME-E2,BME-E4 | M | - | MODULE | 05/06 ▸ 01/07 | 6Q0121201HA | **733062** | 430 | 414,5 | ALM |
| 1.2 i 12V | 5J7/1D4/1E4/2D4/2E4 3D4/3E4/4D4/4E4/PD4 | E | 1198 | BME-E2,BME-E4,BZG-E4 | M | - | TSW | 05/06 ▸ 03/09 | 6Q0121253AE | **732864** | 632 | 414,5 | ALM |
| 1.4 i 16V | 5J7SG4 | E | 1390 | BXW-E2,BXW-E4 | M | +/- | MODULE | 10/06 ▸ 03/10 | 6Q0121201HA | **733062** | 430 | 414,5 | ALM |
| 1.4 i 16V | 5J7/1G4/2G4/3G4/4G4 SG4 | E | 1390 | BXW-E2,BXW-E4 | M | + | TSW | 05/06 ▸ 03/10 | 6Q0121253R | **732864** | 632 | 414,5 | ALM |
| 1.4 i 16V | 5J7/1G4/2G4/3G4/4G4 SG4 | E | 1390 | BXW-E2,BXW-E4 | M | + | TSW | 05/06 ▸ 03/10 | 6Q0121253Q | **732862** | 632 | 414,5 | ALM |
| 1.4 i 16V | 5J7/1G4/2G4/3G4/4G4 | E | 1390 | BXW-E2,BXW-E4 | M | - | MODULE | 05/06 ▸ 03/10 | 6Q0121201HA | **733062** | 430 | 414,5 | ALM |
| 1.4 i 16V | 5J7/1G4/2G4/3G4/4G4 SG4 | E | 1390 | BXW-E2,BXW-E4 | M | - | TSW | 05/06 ▸ 03/10 | 6Q0121253AE | **732864** | 632 | 414,5 | ALM |
| 1.6 i 16V | 5J7/2K4/3K4/4K4 | E | 1598 | BTS-E4 | M | +/- | TSW | 05/06 ▸ 03/10 | 6Q0121253Q | **732862** | 632 | 414,5 | ALM |
| 1.6 i 16V | 5J7SK4 | E | 1598 | BTS-E2,BTS-E4 | M | +/- | MODULE | 10/06 ▸ 03/10 | 6Q0121201HA | **733062** | 430 | 414,5 | ALM |
| 1.6 i 16V | 5J7/1K4/2K4/3K4/4K4 SK4 | E | 1598 | BTS-E2,BTS-E4 | M | + | TSW | 05/06 ▸ 03/10 | 6Q0121253Q | **732862** | 632 | 414,5 | ALM |
| 1.6 i 16V | 5J7/1K4/2K4/3K4/4K4 SK4 | E | 1598 | BTS-E2,BTS-E4 | M | + | TSW | 05/06 ▸ 03/10 | 6Q0121253R | **732864** | 632 | 414,5 | ALM |
| 1.6 i 16V | 5J7/1K4/2K4/3K4/4K4 | E | 1598 | BTS-E2,BTS-E4 | M | - | MODULE | 05/06 ▸ 03/10 | 6Q0121201HA | **733062** | 430 | 414,5 | ALM |
| 1.6 i 16V | 5J7/1K4/2K4/3K4/4K4 SK4 | E | 1598 | BTS-E2,BTS-E4 | M | - | TSW | 05/06 ▸ 03/10 | 6Q0121253AE | **732864** | 632 | 414,5 | ALM |
| 1.6 i 16V | 5J7SKC | E | 1598 | BTS-E2,BTS-E4 | A | +/- | MODULE | 10/06 ▸ 03/10 | 6Q0121201HA | **733062** | 430 | 414,5 | ALM |
| 1.6 i 16V | 5J7/1KC/2KC/3KC/4KC SKC | E | 1598 | BTS-E2,BTS-E4 | A | + | TSW | 10/06 ▸ 03/10 | 6Q0121253R | **732864** | 632 | 414,5 | ALM |
| 1.6 i 16V | 5J7/1KC/2KC/3KC/4KC SKC | E | 1598 | BTS-E2,BTS-E4 | A | + | TSW | 10/06 ▸ 03/10 | 6Q0121253Q | **732862** | 632 | 414,5 | ALM |

# SKODA (.../...)

## ROOMSTER (2006>2010) (.../...)

| Type Ctr. | | CC | | AC | | | OE | Valeo | DIM. | TECH |
|---|---|---|---|---|---|---|---|---|---|---|
| 1.6 i 16V 5J7/1KC/2KC/3KC/4KC SKC | E | 1598 | BTS-E2,BTS-E4 | A | - | TSW | 10/06 ▸ 03/10 | 6Q0121253AE | **732864** | 632 414,5 | ALM |
| 1.6 i 16V 5J7/1KC/2KC/3KC/4KC | E | 1598 | BTS-E2,BTS-E4 | A | - | MODULE | 11/06 ▸ 03/10 | 6Q0121201HA | **733062** | 430 414,5 | ALM |
| 1.4 TDi 5J7/134/234/334/434 S34 | D | 1422 | BNV | M | +/- | TSW | 05/06 ▸ 03/10 | 6Q0121253R | **732864** | 632 414,5 | ALM |
| 1.4 TDi 5J7/114/144/214/244 314/344/414/444/P14/S44 | D | 1422 | BMS/F,BNM | M | + | TSW | 07/06 ▸ 03/10 | 6Q0121253R | **732864** | 632 414,5 | ALM |
| 1.9 TDi 5J7/164/264/364/464 | D | 1896 | BSW | M | +/- | TSW | 05/06 ▸ 03/10 | 6Q0121253R | **732864** | 632 414,5 | ALM |
| 1.9 TDi 5J7/164/174/264/274 364/374/464/474/S64/S74 | D | 1896 | AXR,BLS,BSW | M | + | TSW | 03/06 ▸ 03/10 | 6Q0121253R | **732864** | 632 414,5 | ALM |
| 1.9 TDi 5J7/164/174/264/274 364/374/464/474 | D | 1896 | AXR,BLS,BSW | M | - | TSW | 03/06 ▸ 03/10 | 6Q0121253Q | **732862** | 632 414,5 | ALM |
| 1.9 TDi 5J7/S64/S74 | D | 1896 | BLS,BSW | M | | TSW | 10/06 ▸ 03/10 | 6Q0121253Q | **732862** | 632 414,5 | ALM |

## SUPERB (2001>2008)

| | | | | | | | | | | | |
|---|---|---|---|---|---|---|---|---|---|---|---|
| 1.8 i Turbo 20V 3U4/1K4/2K4/3K4 | E | 1781 | AWT | M | | TSW | 12/01 ▸ 03/08 | 8D0121251BC | **731755** | 630 412,3 | ALM |
| 1.8 i Turbo 20V 3U4/1K4/2K4/3K4 | E | 1781 | AWT | M | | TSW | 12/01 ▸ 03/08 | 8D0121251AT | **732361** | 632 414,5 | ALM |
| 1.8 i Turbo 20V 3U4/1K4/2K4/3K4/4K4 | E | 1781 | AWT | M | | TSW | 12/01 ▸ 03/08 | 8D0121251P | **732361** | 632 414,5 | ALM |
| 1.8 i Turbo 20V 3U4/1KB/2KB/3KB | E | 1781 | AWT | A | | TSW | 01/04 ▸ 03/08 | 8D0121251BC | **731755** | 630 412,3 | ALM |
| 2.0 i 3U4/1M4/2M4/3M4 | E | 1984 | AZM | M | | TSW | 12/01 ▸ 03/08 | 8D0121251P | **732361** | 632 414,5 | ALM |
| 2.8 i V6 30V 3U4/1S4/2S4/3S4 | E | 2771 | AMX | M | + | TSW | 12/01 ▸ 03/08 | 8D0121251N | **731756** | 632 396 | ALM |
| 2.8 i V6 30V 3U44S4 | E | 2771 | AMX | M | | TSW | 12/01 ▸ 03/08 | 8D0121251N | **731756** | 632 396 | ALM |
| 2.8 i V6 30V 3U4/1S4/2S4/3S4 | E | 2771 | AMX | M | | TSW | 12/01 ▸ 03/08 | 8D0121251BB | **731757** | 630 412 | ALM |
| 2.8 i V6 30V 3U4/1SB/1TB/2SB/2TB 3SB/3TB/4SB/4TB | E | 2771 | AMX,BBG | A | | TSW | 12/01 ▸ 03/08 | 8D0121251BB | **731757** | 630 412 | ALM |
| 1.9 TDi 3U4/124/134/224/234 324/334/434 | D | 1896 | AVB,AWX | M | +/- | TSW | 12/01 ▸ 10/05 | 8D0121251AT | **732361** | 632 414,5 | ALM |
| 1.9 TDi 3U4/124/134/144/224 234/244/324/334/344 | D | 1896 | AVB,AWX,BSV | M | +/- | TSW | 06/02 ▸ 03/08 | 8D0121251P | **732361** | 632 414,5 | ALM |
| 1.9 TDi 3U4/134/234/334 | D | 1896 | AWX | M | | TSW | 12/01 ▸ 03/08 | 8D0121251BC | **731755** | 630 412,3 | ALM |
| 1.9 TDi 3U4/124/224/324/434 | D | 1896 | AWX,BPZ | M | | TSW | 04/05 ▸ 03/08 | 8D0121251P | **732361** | 632 414,5 | ALM |
| 1.9 TDi 3U4/13B/23B/33B | D | 1896 | AVF | A | | TSW | 01/04 ▸ 03/08 | 8D0121251BC | **731755** | 630 412,3 | ALM |
| 2.0 TDi 16V 3U4/155/165/255/265 355/365 | D | 1968 | BSS,BWW | M | +/- | TSW | 10/05 ▸ 03/08 | 8D0121251P | **732361** | 632 414,5 | ALM |
| 2.0 TDi 16V 3U4355 | D | 1968 | BSS | M | | TSW | 10/05 ▸ 03/08 | 8D0121251P | **732361** | 632 414,5 | ALM |
| 2.5 TDi V6 24V 3U4/165/175/265/275 365/375 | D | 2496 | AYM,BDG | M | + | TSW | 12/01 ▸ 03/08 | 8D0121251N | **731756** | 632 396 | ALM |
| 2.5 TDi V6 24V 3U4475 | D | 2496 | BDG | M | | TSW | 08/03 ▸ 03/08 | 8D0121251N | **731756** | 632 396 | ALM |
| 2.5 TDi V6 24V 3U4/16B/17B/26B/27B 36B/37B/47B | D | 2496 | AYM,BDG | A | | TSW | 12/01 ▸ 03/08 | 8D0121251BB | **731757** | 630 412 | ALM |

## SUPERB II (2008>)

| | | | | | | | | | | | |
|---|---|---|---|---|---|---|---|---|---|---|---|
| 1.4 TFSi 16V 3T4/1G5/2G5/3G5 | E | 1390 | CAXC | M | + | TSW | 04/08 ▸ | 1K0121253BB | **732872** | 650 414,5 | ALM |
| 1.4 TFSi 16V 3T4/1G5/2G5/3G5 | E | 1390 | CAXC | M | - | | 04/08 ▸ | 1K0121251BN | **735179** | | |
| 1.4 TFSi 16V 3T5/1G5/2G5/3G5 | E | 1390 | CAXC | M | | TSW | 08/08 ▸ | 1K0121253BB | **732872** | 650 414,5 | ALM |
| 1.4 TFSi 16V 3T5/1G5/2G5/3G5 | E | 1390 | CAXC | M | | | 08/08 ▸ | 1K0121251BN | **735179** | | |
| 1.8 TFSi 16V 3T4/1LD/2LD/3LD | E | 1798 | CDAA | A | +/- | | 09/08 ▸ | 1K0121251L | | | |
| 1.8 TFSi 16V 3T5/1JD/1LD/2JD/2LD 3JD/3LD | E | 1798 | CDAA,CDAB | A | | | 03/09 ▸ | 1K0121251L | | | |
| 1.9 TDi 3T4/124/224/324 | D | 1896 | BXE | M | +/- | TSW | 03/08 ▸ | 1K0121253AA | **732872** | 650 414,5 | ALM |
| 1.9 TDi 3T5/124/224/324 | D | 1896 | BXE | M | | TSW | 03/08 ▸ | 1K0121253AA | **732872** | 650 414,5 | ALM |
| 2.0 TDi 16V 3T4/17Y/185/19Y/27Y 285/29Y/375/385/39Y ; 3T5/17Y/185/19Y/275 285/29Y/375/37Y/385/39Y | D | 1968 | CBBB/F,CFFB/F,CFGB/F | M | +/- | Air Seal | 06/08 ▸ | 1K0121251DM | **734333** | 650 454,3 | ALB |
| 2.0 TDi 16V 3T4/175/17Y/275/27Y 375/37Y | D | 1968 | CBBB/F | M | +/- | Air Seal | 06/08 ▸ 05/10 | 1K0121251AB | **734333** | 650 454,3 | ALB |
| 2.0 TDi 16V 3T4/175/17Y/275/27Y 375/37Y | D | 1968 | CBBB/F | M | | Air Seal | 06/08 ▸ | 1K0121251BK | **734333** | 650 454,3 | ALB |
| 2.0 TDi 16V 3T4/175/275/375/37Y 3T5/175/275/27Y/37Y | D | 1968 | CBBB/F | M | | Air Seal | 06/08 ▸ 05/10 | 1K0121251DM | **734333** | 650 454,3 | ALB |
| 2.0 TDi 16V 3T5/175/17Y/275/27Y 375/37Y | D | 1968 | CBBB/F | M | | Air Seal | 06/08 ▸ 05/10 | 1K0121251AB | **734333** | 650 454,3 | ALB |
| 2.0 TDi 16V 3T4/15C/18C/25C/27C 28C/35C/38C ; 3T5/15C/17C/18C/25C/27C/28C 35C/38C | D | 1968 | BKD,CBBB/F,CFFB/F,CLJA/F | A | +/- | Air Seal | 03/08 ▸ | 1K0121251DM | **734333** | 650 454,3 | ALB |
| 2.0 TDi 16V 3T4/17C/27C/37C | D | 1968 | CBBB/F | A | +/- | Air Seal | 03/08 ▸ 05/10 | 1K0121251AB | **734333** | 650 454,3 | ALB |
| 2.0 TDi 16V 3T4/17C/27C/37C | D | 1968 | CBBB/F | A | | Air Seal | 03/08 ▸ | 1K0121251BK | **734333** | 650 454,3 | ALB |
| 2.0 TDi 16V 3T4/17C/27C/37C 3T5/17C/37C | D | 1968 | CBBB/F | A | | Air Seal | 03/08 ▸ 05/10 | 1K0121251DM | **734333** | 650 454,3 | ALB |

Radiator Ψυγείο Vodní chladič Радиатор vízhűtő Radiador Radiator Radyatör Radiator Radiatore di raffreddamento Motorkühler Radiateur Radiator



• **New** Nouveau **Nuevo** Novo **Nuovo** Nieuw **Neu** Nowość **Yeni** Новый Νέο **Nový**

| Type Ctr. | | CC | | AC | | | OE | Valeo | DIM. | TECH |
|---|---|---|---|---|---|---|---|---|---|---|
| **SKODA (.../...)** | | | | | | | | | | |
| **SUPERB II (2008>) (.../...)** | | | | | | | | | | |
| 2.0 TDi 16V 3T5/17C/27C/37C | D | 1968 | CBBB/F | A | | Air Seal | 06/08 ▸ 05/10 | 1K0121251AB | **734333** | 650 454,3 ALB |
| **YETI (2009>)** | | | | | | | | | | |
| 1.2 TSI 5L7/1D4/1D5/2D4/2D5 3D4/3D5 | E | 1197 | CBZB | M | + | | 09/09 ▸ | 1K0121251BN | **735179** | |
| 1.2 TSI 5L7/1D4/1D5/2D4/2D5 3D4/3D5 | E | 1197 | CBZB | M | - | | 09/09 ▸ | 1K0121251CL | **•735280** | 451,5 650 ALM |
| 1.2 TSI 5L7/1DD/2DD/3DD | E | 1197 | CBZB | A | + | | 02/10 ▸ | 1K0121251BN | **735179** | |
| 1.2 TSI 5L7/1DD/2DD/3DD | E | 1197 | CBZB | A | - | | 02/10 ▸ | 1K0121251CL | **•735280** | 451,5 650 ALM |
| 2.0 TDI CR 140 16V 5L7/15Y/17Y/25Y/27Y 2.0 TDI CR 170 16V 35Y/37Y | D | 1968 | CBDB/F,CEGA/F | M | +/- | Air Seal | 05/09 ▸ 05/10 | 1K0121251DM | **734333** | 650 454,3 ALB |
| 2.0 TDI CR 140 16V 5L7/15Y/25Y/35Y | D | 1968 | CBDB/F | M | | Air Seal | 05/09 ▸ 06/09 | 1K0121251AB | **734333** | 650 454,3 ALB |
| **SSANGYONG** | | | | | | | | | | |
| **MUSSO** | | | | | | | | | | |
| 2.3 D | D | 2299 | OM601D23 | M | | | 08/93 ▸ 03/96 | 2131005150 | | |
| 2.3 D | D | 2299 | OM601D23 | M | | | 04/96 ▸ 03/99 | 2131005152 | | 415 680 ALB |
| 2.9 D EOA14SM | D | 2874 | OM602D29 | M | | | 08/93 ▸ 03/96 | 2131005150 | | |
| 2.9 D EOA14SM | D | 2874 | OM602D29 | M | | | 04/96 ▸ 03/99 | 2131005152 | | 415 680 ALB |
| 2.9 D,2.9 TD FJPDM4 ; EOA14SA | D | 2874 | OM602D29,OM662D29 | A | | | 08/93 ▸ | 2131005110 | | |
| 2.9 D,2.9 TD EOA14SA ; FJPDM4 | D | 2874 | OM602D29,OM662D29 | A | | | 04/96 ▸ | 2131005112 | | 415 680 ALB |
| **SUBARU** | | | | | | | | | | |
| **FORESTER (97>2001)** | | | | | | | | | | |
| 2.0 i 16V S10 | E | 1994 | EJ202 | M | + | | 07/98 ▸ 09/02 | 45199FC371 | **732410** | 340 686 CBS |
| 2.0 i Turbo | E | 1994 | EJ205 | M | + | | 07/98 ▸ 09/02 | 45199FC330 | **735208** | 340 686 ALB |
| 2.0 i 16V S10 | E | 1994 | EJ202 | M | - | | 07/98 ▸ 09/02 | 45111FC370 | **732410** | 340 686 CBS |
| 2.0 i 16V S10 | E | 1994 | EJ202 | A | + | | 07/98 ▸ 09/02 | 45199FC361 | **734577** | 340 386 ALB |
| 2.0 i Turbo | E | 1994 | EJ205 | A | - | | 07/98 ▸ 09/02 | 45111FC320 | **734405** | 340 710 ALB |
| **FORESTER (SG) (2002>)** | | | | | | | | | | |
| 2.0 XT Turbo | E | 1994 | EJ205-E2 | A | | | 09/02 ▸ 07/05 | 45111SA011 | **735210** | 360 686 ALB |
| 2.5 XT Turbo 16V | E | 2457 | EJ25T | M | | | 01/04 ▸ 07/05 | 45111SA081 | **•735404** | 686 360 ALB |
| **FORESTER FL (2005>)** | | | | | | | | | | |
| 2.5 XT | E | 2457 | EJ25 | M | | | 08/05 ▸ 11/07 | 45111SA031 | **735209** | 360 686 ALB |
| 2.5 XT | E | 2457 | EJ25 | A | | | 08/05 ▸ 11/07 | 45111SA031 | **735209** | 360 686 ALB |
| **IMPREZA (93>2005)** | | | | | | | | | | |
| 1.6 i GF3 ; GC4 ; GC3 ; GF4 | E | 1597 | EJ161NM,EJ161NW,EJ161RM EJ161RW,EJ16ENA,EJ16ENM EJ16ENW,EJ16ERM,EJ16ERW | M | | | 01/93 ▸ 07/97 | 45119FA040 | **732410** | 340 686 CBS |
| 1.6 i 16V | E | 1597 | EJ16 | M | | | 09/00 ▸ 08/05 | 45111FE080 | **735211** | 340 686 ALB |
| 1.6 i 16V | E | 1597 | EJ16 | M | | | 2005 ▸ 08/05 | 45111FE081 | **735211** | 340 686 ALB |
| 1.6 i GF3 ; GC3 | E | 1597 | EJ161NA,EJ16ENA,EJ16ENM EJ16ERA | A | | | 01/93 ▸ 07/97 | 45119FA030 | **734577** | 340 386 ALB |
| 1.6 i 16V | E | 1597 | EJ16 | A | | | 09/00 ▸ 08/05 | 45111FE051 | **734465** | 340 710 ALB |
| 1.8 i GC6 ; GC5 ; GF6 ; GF3 ; GF5 | E | 1820 | EJ181RW,EJ18ENM,EJ18ENW EJ18ERA,EJ18ERW,EJ18ERX | M | | | 01/93 ▸ 07/97 | 45119FA040 | **732410** | 340 686 CBS |
| 1.8 i GC6 ; GC5 ; GF3 ; GF6 ; GF5 | E | 1820 | EJ181RX,EJ18ENM,EJ18ENX EJ18ERA,EJ18ERX | A | | | 01/93 ▸ 07/97 | 45119FA030 | **734577** | 340 386 ALB |
| 2.0 i Turbo GF8 ; GC8 | E | 1994 | EJ20GN | M | | | 09/94 ▸ 07/00 | 45111AA260 | | 670 394 ALB |
| 2.0 i GC8 ; GF8 ; GC7 | E | 1994 | EJ20EN | M | | | 08/95 ▸ 07/97 | 45119FA040 | **732410** | 340 686 CBS |
| 2.0 STi Turbo 16V,2.0 i 16V | E | 1994 | EJ20E,EJ20T | M | | | 09/00 ▸ 08/05 | 45111FE080 | **735211** | 340 686 ALB |
| 2.0 STi Turbo 16V,2.0 i 16V | E | 1994 | EJ20E,EJ20T | M | | | 2005 ▸ 08/05 | 45111FE081 | **735211** | 340 686 ALB |
| 2.0 i GC8 ; GF8 ; GC7 | E | 1994 | EJ20EN | A | | | 08/95 ▸ 07/97 | 45119FA030 | **734577** | 340 386 ALB |
| 2.0 i 16V,2.0 i Turbo 16V | E | 1994 | EJ20E,EJ20T | A | | | 09/00 ▸ 08/05 | 45111FE051 | **734465** | 340 710 ALB |
| **IMPREZA (2005>2007)** | | | | | | | | | | |
| 2.5 STiS Turbo 16V | E | 2457 | EJ25T | M | | | 02/04 ▸ 08/05 | 45111FE080 | **735211** | 340 686 ALB |
| 2.5 STiS Turbo 16V | E | 2457 | EJ25T | M | | | 2005 ▸ 08/05 | 45111FE081 | **735211** | 340 686 ALB |
| **JUSTY** | | | | | | | | | | |
| 1.0 KD5 ; KA5 | E | 997 | EF10NF1 | M | | | 06/86 ▸ 05/95 | 745111290 | **731153** | 327 408 CBS |
| 1.0 KA6 ; KD5 ; KA5 ; KD6 | E | 997 | EF10NF1 | M | | | 06/86 ▸ 05/95 | 745111380 | **731153** | 327 408 CBS |
| 1.2 KD7 ; KA7 ; KD5 ; KD8 ; KA8 | E | 1189 | EF12,EF12AT | M | | | 08/87 ▸ 06/95 | 745111740 | **731153** | 327 408 CBS |

# SUBARU (.../...)

## JUSTY (.../...)

| | | | CC | | | AC | | | OE | Valeo | DIM. | TECH |
|---|---|---|---|---|---|---|---|---|---|---|---|---|
| 1.3 i | MAF ; MAG | E | 1298 | G13BA | M | | | 10/95 ▸ 10/03 | 1770080E00 | | | |

## LEGACY (89>93)

| | | | | | | | | | | | | |
|---|---|---|---|---|---|---|---|---|---|---|---|---|
| 1600 | BCH ; BFH ; BJH | E | 1597 | EJ16AR | M | | | 05/89 ▸ 09/94 | 45199AA190 | **731438** | 672 391 | ALB |
| 1600 | BFH ; BJH ; BCH | E | 1597 | EJ16AR | M | | | 08/89 ▸ 09/91 | 45199AA090 | **731675** | 672 391 | ALB |
| 1600 | BJH ; BCH ; BFH | E | 1597 | EJ16AR | M | | | 08/89 ▸ 08/89 | 45199AA080 | **731438** | 672 391 | ALB |
| 1600 | BFH ; BCH ; BJH | E | 1597 | EJ16AR | M | | | 09/89 ▸ 12/93 | 45199AA220 | **731438** | 672 391 | ALB |
| 1600 | BCH ; BJH ; BFH | E | 1597 | EJ16AR | A | | | 05/89 ▸ 09/94 | 45199AA121 | **734211** | 670 361 | ALB |
| 1600 | BCH ; BFH ; BJH | E | 1597 | EJ16AR | A | | | 08/89 ▸ 09/91 | 45199AA090 | **731675** | 672 391 | ALB |
| 1600 | BCH ; BJH ; BFH | E | 1597 | EJ16AR | A | | | 08/89 ▸ 08/89 | 45199AA080 | **731438** | 672 391 | ALB |
| 1600 | BCH ; BFH ; BJH | E | 1597 | EJ16AR | A | | | 09/89 ▸ 12/93 | 45199AA220 | **731438** | 672 391 | ALB |
| 1800 i | BC3 ; BJ2 ; BF3 BC2 ; BJ3 | E | 1820 | EJ18AR,EJ18SN | M | | | 05/89 ▸ 09/94 | 45199AA190 | **731438** | 672 391 | ALB |
| 1800 i | BJ3 ; BJ2 ; BC3 BC2 ; BF3 | E | 1820 | EJ18AR,EJ18SN | M | | | 08/89 ▸ 08/89 | 45199AA080 | **731438** | 672 391 | ALB |
| 1800 i | BJ2 ; BJ3 ; BC3 BC2 ; BF3 | E | 1820 | EJ18AR,EJ18SN | M | | | 08/89 ▸ 09/91 | 45199AA090 | **731675** | 672 391 | ALB |
| 1800 i | BJ3 ; BC2 ; BF3 BJ2 ; BC3 | E | 1820 | EJ18AR,EJ18SN | M | | | 09/89 ▸ 12/93 | 45199AA220 | **731438** | 672 391 | ALB |
| 1800 i | BJ2 ; BC2 ; BF3 BC3 | E | 1820 | EJ18AR,EJ18SN | A | | | 05/89 ▸ 09/94 | 45199AA121 | **734211** | 670 361 | ALB |
| 1800 i | BC2 ; BJ2 ; BF3 BC3 | E | 1820 | EJ18AR,EJ18SN | A | | | 08/89 ▸ 09/91 | 45199AA090 | **731675** | 672 391 | ALB |
| 1800 i | BC2 ; BC3 ; BJ2 BF3 | E | 1820 | EJ18AR,EJ18SN | A | | | 08/89 ▸ 08/89 | 45199AA080 | **731438** | 672 391 | ALB |
| 1800 i | BC3 ; BJ2 ; BC2 BF3 | E | 1820 | EJ18AR,EJ18SN | A | | | 09/89 ▸ 12/93 | 45199AA220 | **731438** | 672 391 | ALB |
| 2000 i Turbo | BC5 | E | 1994 | EJ20GN | M | | | 08/91 ▸ 09/94 | 45111AA260 | | 670 394 | ALB |
| 2000 i | BC4 ; BJ | E | 1994 | EJ20EN | M | | | 08/91 ▸ 09/94 | 45199AA190 | **731438** | 672 391 | ALB |
| 2000 i | BC4 | E | 1994 | EJ20EN | M | | | 10/91 ▸ 12/93 | 45199AA220 | **731438** | 672 391 | ALB |
| 2200 i | BF7 ; BC6 ; BC7 BF6 | E | 2212 | EJ22EN,EJ22ER | M | | | 05/89 ▸ 09/94 | 45199AA190 | **731438** | 672 391 | ALB |
| 2200 i | BF7 ; BC6 ; BC7 BF6 | E | 2212 | EJ22EN,EJ22ER | M | | | 08/89 ▸ 12/89 | 45199AA120 | **731675** | 672 391 | ALB |
| 2200 i | BC7 ; BF6 ; BF7 BC6 | E | 2212 | EJ22EN,EJ22ER | M | | | 01/90 ▸ 08/90 | 45199AA200 | **731675** | 672 391 | ALB |
| 2200 i | BF7 ; BF6 ; BC7 BC6 | E | 2212 | EJ22EN,EJ22ER | M | | | 09/90 ▸ 09/91 | 45199AA100 | **731675** | 672 391 | ALB |
| 2200 i | BF7 ; BC7 ; BF6 BC6 | E | 2212 | EJ22EN,EJ22ER | A | | | 05/89 ▸ 09/94 | 45199AA121 | **734211** | 670 361 | ALB |
| 2200 i | BF7 ; BC6 ; BC7 BF6 | E | 2212 | EJ22EN,EJ22ER | A | | | 08/89 ▸ 12/89 | 45199AA120 | **731675** | 672 391 | ALB |
| 2200 i | BF7 ; BF6 ; BC7 BC6 | E | 2212 | EJ22EN,EJ22ER | A | | | 01/90 ▸ 08/90 | 45199AA200 | **731675** | 672 391 | ALB |
| 2200 i | BC6 ; BF6 ; BF7 BC7 | E | 2212 | EJ22EN,EJ22ER | A | | | 09/90 ▸ 09/91 | 45199AA100 | **731675** | 672 391 | ALB |

## LEGACY (94>97)

| | | | | | | | | | | | | |
|---|---|---|---|---|---|---|---|---|---|---|---|---|
| 1.8 i | BD2 | E | 1820 | EJ18EN,EJ18JN | M | | | 07/95 ▸ 11/98 | 45199AC041 | **734212** | 673 361 | ALB |
| 1.8 i | BD2 | E | 1820 | EJ18EN,EJ18JN | A | | | 07/95 ▸ 11/98 | 45199AC071 | **734158** | 673 405 | ALB |
| 2.0 i | BG4 ; BD5 ; BG5 ; BGA ; BD4 | E | 1994 | EJ20EN,EJ20ER | M | | | 01/94 ▸ 06/94 | 45199AA190 | **731438** | 672 391 | ALB |
| 2.0 i | BD4 ; BG4 ; BG5 ; BD5 ; BGA | E | 1994 | EJ20EN,EJ20ER | M | | | 07/94 ▸ 06/95 | 45199AC040 | **734212** | 673 361 | ALB |
| 2.0 i | BD4 ; BD5 ; BG4 ; BG5 ; BGA | E | 1994 | EJ20EN,EJ20ER | M | | | 07/95 ▸ 11/98 | 45199AC041 | **734212** | 673 361 | ALB |
| 2.0 i | BD4 ; BG4 ; BG5 ; BD5 | E | 1994 | EJ20EN,EJ20ER | A | | | 01/94 ▸ 06/94 | 45199AA121 | **734211** | 670 361 | ALB |
| 2.0 i | BD5 ; BG5 ; BD4 ; BG4 | E | 1994 | EJ20EN,EJ20ER | A | | | 07/94 ▸ 06/95 | 45199AC070 | **734158** | 673 405 | ALB |
| 2.0 i | BD4 ; BG5 ; BD5 ; BG4 | E | 1994 | EJ20EN,EJ20ER | A | | | 07/95 ▸ 11/98 | 45199AC071 | **734158** | 673 405 | ALB |
| 2.0 i | BD4 ; BD5 ; BG4 | E | 1994 | EJ20EN | A | | | 02/97 ▸ 11/98 | 45199AC041 | **734212** | 673 361 | ALB |
| 2.2 i | BD7 ; BG7 ; BG6 ; BD6 | E | 2212 | EJ22EN,EJ22ER | M | | | 01/94 ▸ 06/94 | 45199AA190 | **731438** | 672 391 | ALB |
| 2.2 i | BD7 ; BG7 ; BG6 ; BD6 | E | 2212 | EJ22EN,EJ22ER | M | | | 07/94 ▸ 06/95 | 45199AC040 | **734212** | 673 361 | ALB |
| 2.2 i | BG7 ; BG6 ; BD6 ; BD7 | E | 2212 | EJ22EN,EJ22ER | M | | | 07/95 ▸ 06/97 | 45199AC041 | **734212** | 673 361 | ALB |
| 2.2 i | BD7 ; BG6 ; BG7 ; BGB ; BD6 | E | 2212 | EJ22EN,EJ22ER | A | | | 01/94 ▸ 06/94 | 45199AA121 | **734211** | 670 361 | ALB |
| 2.2 i | BD6 ; BD7 ; BGB ; BG7 ; BG6 | E | 2212 | EJ22EN,EJ22ER | A | | | 07/94 ▸ 06/95 | 45199AC070 | **734158** | 673 405 | ALB |
| 2.2 i | BG7 ; BG6 ; BD7 ; BGB ; BD6 | E | 2212 | EJ22EN,EJ22ER | A | | | 07/95 ▸ 06/97 | 45199AC071 | **734158** | 673 405 | ALB |
| 2.5 i 16V | BG9 | E | 2457 | EJ25D | M | | | 10/96 ▸ 09/98 | 45199AC210 | | 672 394 | ALB |
| 2.5 i 16V | BG9 ; BGC ; BD9 | E | 2457 | EJ25D | A | | | 07/96 ▸ 11/98 | 45199AC210 | | 672 394 | ALB |
| 2.5 i 16V | BD9 ; BG9 ; BGC | E | 2457 | EJ25D | A | | | 07/96 ▸ 06/97 | 45199AC250 | | 672 394 | ALB |

## LEGACY (98>2002)

| | | | | | | | | | | | | |
|---|---|---|---|---|---|---|---|---|---|---|---|---|
| 2.0 i 16V | BE5 ; BH5 | E | 1994 | EJ201 | A | | | 10/98 ▸ 04/03 | 45111AE003 | **734465** | 340 710 | ALB |

Radiator Ψυγείο Vodní chladič Radiator Радиатор vízhűtő Radiador Radiator Radyatör Radiator Radiatore di raffreddamento Motorkühler Radiateur



• **New** Nouveau **Nuevo** Novo **Nuovo** Nieuw **Neu** Nowość **Yeni** Новый Νέο **Novy**

| | Type Ctr. | | CC | | AC | | | OE | Valeo | DIM. | | TECH |
|---|---|---|---|---|---|---|---|---|---|---|---|---|
| **SUBARU (.../...)** | | | | | | | | | | | | |
| **LEGACY (98>2002) (.../...)** | | | | | | | | | | | | |
| 2.5 i 16V | BH9 ; BE9 ; BHC | E | 2457 | EJ251 | A | | | 10/98 ▸ 04/03 | 45111AE003 | **734465** | 340 | 710 ALB |
| **LEGACY (2003>)** | | | | | | | | | | | | |
| 2.0 i 16V | BL5 ; BL | E | 1994 | EJ202,EJ20E | M | | | 05/03 ▸ | 45119AG020 | **735212** | 340 | 706 ALB |
| 2.0 i 16V | BL5 | E | 1994 | EJ202 | A | | | 05/03 ▸ | 45119AG020 | **735212** | 340 | 706 ALB |
| 2.5 i 16V | | E | 2457 | EJ25-165 | M | | | 05/03 ▸ | 45119AG020 | **735212** | 340 | 706 ALB |
| 2.5 i 16V | BP9 | E | 2457 | EJ25-165 | A | | | 05/03 ▸ | 45119AG020 | **735212** | 340 | 706 ALB |
| **LEONE (79>84)** | | | | | | | | | | | | |
| 1800 | | E | 1781 | EA81-80 | M | | | 06/79 ▸ 06/84 | 45111GA650 | **731456** | 645 | 323 CBS |
| **LEONE II (84>91)** | | | | | | | | | | | | |
| 1.8 i Turbo | | E | 1781 | EA82T-136 | M | | | 07/84 ▸ 09/91 | 45111GA660 | **731456** | 645 | 323 CBS |
| 1.8,1.8 i | | E | 1781 | EA82-90,EA82-98 | M | | | 07/84 ▸ 09/91 | 45111GA650 | **731456** | 645 | 323 CBS |
| 1.8,1.8 i,1.8 i Turbo | | E | 1781 | EA82-90,EA82-98,EA82T-136 | M | | | 07/84 ▸ 09/91 | 45111GA870 | **731456** | 645 | 323 CBS |
| 1.8 i Turbo | | E | 1781 | EA82T-136 | M | | | 07/84 ▸ 09/91 | 45111GA641 | | 645 | 323 CBS |
| 1.8 i Turbo | | E | 1781 | EA82T-136 | M | | | 07/84 ▸ 09/91 | 45111GA570 | | 670 | 323 CBS |
| **VIVIO** | | | | | | | | | | | | |
| 660 | KW4 ; KK4 ; KK3 ; KW3 | E | 658 | EN07ERM,EN07ERW | M | | | 03/92 ▸ 07/94 | 45199KC001 | **734157** | 350 | 383 ALB |
| 660 | KK3 | E | 658 | EN07A2M,EN07AFM,EN07ERM | M | | | 03/92 ▸ 10/95 | 45199KA261 | **731677** | 350 | 383 ALB |
| 660 | KK3 ; KW4 ; KK4 ; KW3 | E | 658 | EN07ERM,EN07ERW | M | | | 08/94 ▸ 10/95 | 45199KC002 | **734157** | 350 | 383 ALB |
| 660 | KK3 ; KW3 | E | 658 | EN07AEC,EN07ERC | A | | | 03/92 ▸ 10/95 | 45199KA271 | **731678** | 352 | 396 ALB |
| **SUZUKI** | | | | | | | | | | | | |
| **ALTO (SB30*)** | | | | | | | | | | | | |
| 0.8 | ECB91 ; ECA91 | E | 796 | F8B | M | | | 10/85 ▸ 02/94 | 1770084200 | | 300 | 340 CBS |
| **ALTO (SH410)** | | | | | | | | | | | | |
| 1.0 | HCJ73 ; HCN73 | E | 993 | G10B,G10B-58 | M | | | 03/94 ▸ 05/02 | 17700M72F20 | **731866** | 325 | 348 CBS |
| **BALENO** | | | | | | | | | | | | |
| 1.3 i 16V | AEGA1 ; 2GA21 GA11S ; AEGC1 ; GC11S | E | 1298 | G13BB | M | | | 04/95 ▸ 2002 | 1770060G01 | **732750** | 526 | 350 CBS |
| 1.5 i 16V | AEGC2 | E | 1493 | G15A | M | | | 04/95 ▸ 2002 | 1770060G01 | **732750** | 526 | 350 CBS |
| 1.6 i 16V | 2GA31 ; GA31S GC31S ; GC31W ; 3GB31 | E | 1590 | G16B | M | | | 04/95 ▸ 2002 | 1770062G01 | **734835** | 350 | 526 CBS |
| 1.6 i 16V | AEGA3 ; AEGB3 AEGC3 ; AEGD3 | E | 1590 | G16B | M | | | 04/95 ▸ 2002 | 1770060G01 | **732750** | 526 | 350 CBS |
| 1.6 i 16V | AEGD3 ; AEGC3 | E | 1590 | G16B | M | | | 06/96 ▸ 2002 | 1770063G00 | | 350 | 603 ALB |
| 1.8 i 16V | AEGA4 ; 2GB41 2GA41 ; GA41S ; GC41W ; AEGC4 | E | 1840 | J18A | M | | | 06/96 ▸ 2002 | 1770062G01 | **734835** | 350 | 526 CBS |
| 1.8 i 16V | AEGC4 | E | 1840 | J18A | M | | | 06/96 ▸ 2002 | 1770063G20 | | 350 | 603 ALB |
| **GRAND VITARA (98>2005)** | | | | | | | | | | | | |
| 1.6 i 16V | JSAFT | E | 1590 | G16B | M | | | 05/98 ▸ 02/05 | 1770066D01 | **734162** | 425 | 526 ALB |
| 1.6 i 16V | JSAFT | E | 1590 | G16B | A | | | 05/98 ▸ 02/05 | 1770066D11 | | 425 | 526 ALB |
| 2.0 i 16V | JSAFT | E | 1995 | J20A | M | | | 05/98 ▸ 02/05 | 1770077E20 | **734213** | 425 | 518 ALB |
| 2.5 i V6 | JSAFT | E | 2494 | H25A | M | | | 05/98 ▸ 02/05 | 1770077E20 | **734213** | 425 | 518 ALB |
| 2.0 HDi | JSAFT | D | 1997 | RHZ | A | | | 01/01 ▸ 02/05 | 1770078E10 | **734214** | 425 | 518 CBS |
| 2.0 TD | JSAFT | D | 1998 | RFM | A | | | 05/98 ▸ 02/05 | 1770078E10 | **734214** | 425 | 518 CBS |
| **GRAND VITARA XL7 (2001>)** | | | | | | | | | | | | |
| 2.7 i V6 24V | JSAHT | E | 2737 | H27A,H27A-184 | A | | | 03/01 ▸ 01/04 | 1770052D10 | **734161** | 425 | 598 ALB |
| **GRAND VITARA (2006>)** | | | | | | | | | | | | |
| 1.6 VVT 16V | JB416 | E | 1586 | M16A | M | +/- | | 03/06 ▸ | 1770066J00 | **•735433** | 450 | 690 ALB |
| 2.4 VVT 16V | JB424 | E | 2393 | J24B | M | +/- | | 03/09 ▸ | 1770066J00 | **•735433** | 450 | 690 ALB |
| 2.4 VVT 16V | JB424 | E | 2393 | J24B | A | +/- | | 03/09 ▸ | 1770066J00 | **•735433** | 450 | 690 ALB |
| 3.2 VVT 16V | JB632 | E | 3195 | N32A | A | +/- | | 03/09 ▸ | 1770066J10 | **•735580** | 450 | 690 ALB |
| 1.9 DDiS | JB419 | D | 1870 | F9Q | M | +/- | | 03/06 ▸ | 1770066J00 | **•735433** | 450 | 690 ALB |
| **IGNIS** | | | | | | | | | | | | |
| 1.3 i | FHV51 ; FHX51 ; FHY51 | E | 1328 | M13A | M | +/- | | 09/00 ▸ 08/03 | 1770080G00 | **734171** | 375 | 348 ALB |
| 1.3 i 16V | RM413 | E | 1328 | M13AVVT | M | | | 09/03 ▸ | 1770083E00 | **732719** | 375 | 377,5 ALB |
| 1.3 i | FHV51 ; FHX51 ; FHY51 | E | 1328 | M13A | A | +/- | | 09/00 ▸ 08/03 | 1770080G00 | **734171** | 375 | 348 ALB |
| 1.5 i 16V | FH | E | 1490 | M15A | M | | | 12/00 ▸ 08/03 | 1770080G00 | **734171** | 375 | 348 ALB |

| Type Ctr. | | CC | | AC | | | OE | Valeo | DIM. | TECH |
|---|---|---|---|---|---|---|---|---|---|---|
| **SUZUKI (.../...)** | | | | | | | | | | |
| **IGNIS (.../...)** | | | | | | | | | | |
| 1.5 i 16V RM415 | E | 1490 | M15,M15A | M | | | 09/03 ▸ | 1770083E00 | **732719** | 375 377,5 ALB |
| **JIMNY** | | | | | | | | | | |
| 1.3 i FJB33 ; FJA33 | E | 1298 | G13BB/E6 | M | | | 09/98 ▸ | 1770081A00 | **734170** | 375 449 ALB |
| 1.3 i 16V | E | 1328 | M13A | M | | | 04/02 ▸ | 1770080A00 | **734170** | 375 449 ALB |
| 1.3 i 16V | E | 1328 | M13A | A | | | 04/02 ▸ | 1770080A10 | •**735578** | 375 448 ALB |
| **LIANA** | | | | | | | | | | |
| 1.3 i 16V RC11S | E | 1328 | M13A | M | +/- | | 06/01 ▸ 01/06 | 1770054G00 | **734164** | 350 718 ALB |
| 1.3 i 16V RA11S | E | 1328 | M13A | M | | | 10/02 ▸ 01/06 | 1770054G00 | **734164** | 350 718 ALB |
| 1.6 i 16V RC31S ; RD31S | E | 1586 | M16A | M | +/- | | 06/01 ▸ 04/04 | 1770054G00 | **734164** | 350 718 ALB |
| 1.6 i 16V RA31S ; RB31S | E | 1586 | M16A | M | | | 10/02 ▸ 04/04 | 1770054G00 | **734164** | 350 718 ALB |
| 1.6 i 16V RD31S ; RC31S | E | 1586 | M16A | A | +/- | | 06/01 ▸ 04/04 | 1770054G10 | **734165** | 350 718 ALB |
| **S410/S413** | | | | | | | | | | |
| 1.3 S413S ; S413J ; S410J ; S413V ; S413U S4105 | E | 1324 | G13 | M | | | 09/86 ▸ 2004 | 1770084C00 | | 364 390 CBS |
| **SAMURAI** | | | | | | | | | | |
| 1.9 TD | D | 1905 | XUD9T | M | | | 11/98 ▸ 08/01 | 1770084CB0 | **734918** | 425 478 CBS |
| 1.9 TD | D | 1905 | XUD9T | M | | | 11/98 ▸ 08/01 | 1770084CA0 | **735073** | 425 478 CBS |
| **SPLASH** | | | | | | | | | | |
| 1.0 i 12V | E | 997 | K10B | M | +/- | | 03/08 ▸ | 1770073KA0 | •**735383** | 375 479 ALB |
| 1.2 i 16V | E | 1242 | K12B | M | +/- | | 03/08 ▸ | 1770073KA0 | •**735383** | 375 479 ALB |
| **SWIFT (SA) (83>88)** | | | | | | | | | | |
| 1.0 AA43F ; AA43S ; AA41S ; AA41F | E | 993 | G10 | M | | | 10/83 ▸ 02/89 | 1770082022 | **730456** | 352 378 CBS |
| 1.3 16V AA31S ; AA31F | E | 1298 | G13DOHC | M | | | 08/84 ▸ 01/88 | 1770082622 | | 325 337 CBS |
| 1.3 AA51S ; AA51F | E | 1324 | G13A | M | | | 08/84 ▸ 01/88 | 1770082622 | | 325 337 CBS |
| 1.3 AA51F | E | 1324 | G13A | A | | | 08/84 ▸ 01/88 | 1770082631 | | |
| **SWIFT (SF) (89>96)** | | | | | | | | | | |
| 1.0,1.0 i EAB44 ; EAA44 | E | 993 | G10,G10A | M | | | 03/89 ▸ 08/96 | 1770060B22 | **731828** | 352 358 CBS |
| 1.0,1.0 i EAB44 ; EAA44 | E | 993 | G10,G10A | A | | TSW | 03/89 ▸ 08/96 | 1770060B32 | **734159** | 327 328 CBS |
| 1.3 i,1.3 i 16V EAA34 ; EAA35 EAH35 ; EAB35 | E | 1298 | G13B,G13BDOHC,G13DOHC | M | | TSW | 10/89 ▸ 08/96 | 1770071C01 | **734166** | 352 328 CBS |
| 1.3 i EAH35 ; EAA35 ; EAB35 ▸ 140001 | E | 1298 | G13B | A | | TSW | 04/92 ▸ 08/96 | 1770063E20 | **734203** | 352 358 CBS |
| 1.3,1.3 i EAA35 ; EAH35 EAF35 ; EAB35 ▸ 140000 | E | 1298 | G13B,G13BA,G13BAK4WD | M | | | 03/89 ▸ | 1770060B22 | **731828** | 352 358 CBS |
| 1.3,1.3 i EAA35 ; EAB35 EAH35 ▸ 140000 | E | 1298 | G13B,G13BA | A | | TSW | 03/89 ▸ | 1770060B32 | **734159** | 327 328 CBS |
| 1.6 i 16V SF416 | E | 1590 | G16B | M | | TSW | 01/90 ▸ 03/92 | 1770071C01 | **734166** | 352 328 CBS |
| **SWIFT (SF) (95>96)** | | | | | | | | | | |
| 1.0 i MAB44 ; MAA44 | E | 993 | G10A | M | | | 01/95 ▸ 08/96 | 1770080E00 | | |
| 1.0 i MAA44 ; MAB44 | E | 993 | G10A | A | | TSW | 01/95 ▸ 08/96 | 1770060B32 | **734159** | 327 328 CBS |
| 1.3 i MAA35 ; MAB35 ; MAH35 | E | 1298 | G13BAK | M | | | 01/95 ▸ 08/96 | 1770080E00 | | |
| 1.3 i MAB35 ; MAA35 | E | 1298 | G13BAK | A | | TSW | 01/95 ▸ 08/96 | 1770063E20 | **734203** | 352 358 CBS |
| **SWIFT (96>2005)** | | | | | | | | | | |
| 1.0 i HEN33 ; HEJ33 | E | 993 | G10A | M | | | 09/96 ▸ 03/05 | 1770080E00 | | |
| 1.3 i,1.3 i 16V SEL53 ; HEJ53 HEN53 | E | 1298 | G13B,G13BB | M | | | 09/96 ▸ 03/05 | 1770080E00 | | |
| 1.3 i,1.3 i 16V HEN55 ; HEJ55 | E | 1298 | G13B,G13BB | A | | TSW | 09/96 ▸ 03/05 | 1770063E20 | **734203** | 352 358 CBS |
| **SX4 (2006>2009)** | | | | | | | | | | |
| 1.5 i 16V RW415 | E | 1490 | M15A | M | | | 03/06 ▸ 06/09 | 1770079J00 | •**735407** | 375 709 ALB |
| 1.6 VVT 16V RW416 | E | 1586 | M16A | M | | | 03/06 ▸ 06/09 | 1770079J00 | •**735407** | 375 709 ALB |
| **SX4 (2009>)** | | | | | | | | | | |
| 1.5 VVT 16V | E | 1490 | M15A | M | | | 07/09 ▸ | 1770079J00 | •**735407** | 375 709 ALB |
| 1.6 VVT 16V | E | 1586 | M16A | M | | | 07/09 ▸ | 1770079J00 | •**735407** | 375 709 ALB |
| **SX4 (MAGYAR) (2009>)** | | | | | | | | | | |
| 1.9 DDiS RW419 | D | 1910 | D19AA | M | | | 04/09 ▸ | 1770079J50 | •**735400** | 375 651 ALB |

Radiator Ψυγείο Vodní chladič Радиатор vízhűtő Radiador Radiator Radyatör Radiator Radiatore di raffreddamento Motorkühler Radiateur



• **New** Nouveau **Nuevo** Novo **Nuovo** Nieuw **Neu** Nowość **Yeni** Новый Νέο **Nový**

| | Type Ctr. | | CC | | AC | | | OE | Valeo | DIM. | TECH |
|---|---|---|---|---|---|---|---|---|---|---|---|
| **SUZUKI (.../...)** | | | | | | | | | | | |
| **SX4 (MAGYAR) (2009>) (.../...)** | | | | | | | | | | | |
| 2.0 DDiS 16V | | D | 1956 | D20AA | M | | 07/09 ▸ | 1770079J50 | •735400 | 375 651 | ALB |
| **VITARA** | | | | | | | | | | | |
| 1.6,1.6 i 16V,1.6 i 8V | ETA01 ; ETD01 ETA02 | E | 1590 | G16AC,G16AI,G16B | M | | 10/88 ▸ | 1770060A11 | 731463 | 375 490 | CBS |
| 1.6 i 16V | ETD01 | E | 1590 | G16B | M | | 10/91 ▸ 03/98 | 1770056B02 | | 425 478 | CBS |
| 1.6 i 16V | ETD01 | E | 1590 | G16B | A | | 10/91 ▸ | 1770060A11 | 731463 | 375 490 | CBS |
| 2.0 V6 200001 ▸ | ETD11 | E | 1998 | H20A | M | | > ▸ 03/98 | 1770077E20 | 734213 | 425 518 | ALB |
| 2.0 V6 ▸ 200000 | ETD11 | E | 1998 | H20A | M | | 01/95 ▸ | 1770077E00 | 734213 | 425 518 | ALB |
| 2.0 V6 ▸ 200000 | ETD11 | E | 1998 | H20A | A | | 01/95 ▸ | 1770077E10 | •735405 | 518 425 | ALB |
| 1.9 D | ET | D | 1905 | XUD9 | M | | 01/96 ▸ 03/98 | 1770086CA0 | 734406 | 425 490 | CBS |
| 1.9 TD | | D | 1905 | XUD9T | M | | 01/97 ▸ 03/98 | 1770086CB0 | 734919 | 425 478 | CBS |
| 1.9 TD | | D | 1905 | XUD9T | A | | 01/97 ▸ 03/98 | 1770086CB0 | 734919 | 425 478 | CBS |
| 2.0 HDI | | D | 1997 | RHZ | M | | 01/98 ▸ 03/98 | 1770086CC2 | 735074 | 438 534 | CBS |
| 2.0 TD | ETD31 | D | 1998 | RF | A | | 01/96 ▸ 03/98 | 1770078E10 | 734214 | 425 518 | CBS |
| **WAGON R** | | | | | | | | | | | |
| 1.0 i 16V | JSAEM | E | 997 | K10A | M | | 03/97 ▸ 2005 | 1770075F00 | 734917 | 350 358 | ALB |
| 1.0 i 16V | JSAEM | E | 997 | K10A | A | | 03/97 ▸ 2005 | 1770075F10 | 734486 | 350 358 | ALB |
| 1.2 i 16V | JSAEM | E | 1171 | K12A | M | | 09/98 ▸ 2008 | 1770075F00 | 734917 | 350 358 | ALB |
| 1.2 i 16V | JSAEM | E | 1171 | K12A | A | | 09/98 ▸ 2008 | 1770075F10 | 734486 | 350 358 | ALB |
| **WAGON R+** | | | | | | | | | | | |
| 1.0 i | TSMMM | E | 993 | G10A | M | | 03/00 ▸ 2005 | 1770083E00 | 732719 | 375 377,5 | ALB |
| 1.3 i 16V | TSMMM | E | 1298 | G13BB | M | | 03/00 ▸ 2008 | 1770083E00 | 732719 | 375 377,5 | ALB |
| 1.3 i 16V | | E | 1328 | M13AVVT | M | | 03/04 ▸ 2008 | 1770083E00 | 732719 | 375 377,5 | ALB |
| **TOYOTA** | | | | | | | | | | | |
| **AURIS (JPP150) (2006>)** | | | | | | | | | | | |
| 1.4 VVT-i 97 16V | ZZE150 | E | 1398 | 4ZZFE-HTWC | M | | 10/06 ▸ 12/08 | 1640022160 | 735250 | 600 370 | |
| 1.6 VVT-i 124 16V | ZRE151 | E | 1598 | 1ZRFE-HTWC | M | | 10/06 ▸ 12/08 | 1640022160 | 735250 | 600 370 | |
| 1.4 D-4D | NDE150 | D | 1364 | 1NDTV-DCR | M | | 10/06 ▸ 12/08 | 164000N060 | 735213 | 550 370 | |
| **AURIS (UKP150) (2007>2010)** | | | | | | | | | | | |
| 1.4 D-4D | NDE150 | D | 1364 | 1NDTV-DCR | M | | 02/07 ▸ 01/10 | 164000N060 | 735213 | 550 370 | |
| **AVENSIS (97>2000)** | | | | | | | | | | | |
| 1.6 i 16V | AT220L | E | 1587 | 4A-FEC | M | | 10/97 ▸ 06/00 | 1640002270 | 732950 | 325 658 | ALB |
| 1.6 i 16V | AT220L ; AT220R | E | 1587 | 4A-FEC | M | | 10/97 ▸ 06/00 | 1640002310 | 732950 | 325 658 | ALB |
| 1.8 i 16V | AT221L ; AT221R | E | 1762 | 7A-FE | M | | 10/97 ▸ 06/00 | 1640002270 | 732950 | 325 658 | ALB |
| 1.8 i 16V | AT221R ; AT221L | E | 1762 | 7A-FE | A | | 10/97 ▸ 06/00 | 1640002280 | 732753 | 325 658 | ALB |
| 2.0 i 16V | ST220L ; ST220R | E | 1998 | 3S-FE | M | | 10/97 ▸ 06/00 | 1640003180 | 732951 | 325 658 | ALB |
| 2.0 i 16V | ST220L ; ST220R | E | 1998 | 3S-FE | A | | 10/97 ▸ 06/00 | 1640003190 | 732754 | 325 658 | ALB |
| 2.0 TD | CT220R ; CT220L | D | 1974 | 2C-T,2C-TE | M | | 10/97 ▸ 06/00 | 164000B030 | 734845 | 378 694 | ALB |
| 2.0 D-4D 16V | CDT220 | D | 1995 | 1CDFTV-HDCR | M | | 08/99 ▸ 06/00 | 164000G010 | 735075 | 375 698 | ALB |
| **AVENSIS (2000>2003)** | | | | | | | | | | | |
| 1.6 VVTi 16V | ZZT220 | E | 1598 | 3ZZ-FE | M | | 07/00 ▸ 01/03 | 164000D080 | 734401 | 325 658 | ALB |
| 1.8 i 16V | ZZT221 | E | 1794 | 1ZZ-FE | M | | 07/00 ▸ 01/03 | 164000D080 | 734401 | 325 658 | ALB |
| 1.8 i 16V | ZZT221 | E | 1794 | 1ZZ-FE | A | | 07/00 ▸ 01/03 | 164000D100 | 734490 | 325 682 | ALB |
| 2.0 D4 16V | AZT220 | E | 1998 | 1AZ-FSE | M | | 07/00 ▸ 01/03 | 164000D080 | 734401 | 325 658 | ALB |
| 2.0 i 16V | ST220R ; ST220L | E | 1998 | 3S-FE | M | | 07/00 ▸ 01/03 | 1640003180 | 732951 | 325 658 | ALB |
| 2.0 i 16V | ST220L ; ST220R | E | 1998 | 3S-FE | A | | 07/00 ▸ 01/03 | 1640003190 | 732754 | 325 658 | ALB |
| 2.0 D4 16V | AZT220 | E | 1998 | 1AZ-FSE | A | | 10/00 ▸ 01/03 | 164000H010 | 734491 | 325 682 | ALB |
| 2.0 D-4D 16V | CDT220 | D | 1995 | 1CDFTV-HDCR | M | | 07/00 ▸ 01/03 | 164000G010 | 735075 | 375 698 | ALB |
| **AVENSIS (2003>2008)** | | | | | | | | | | | |
| 1.6 VVTi 16V | ZZT250 | E | 1598 | 3ZZ-FE | M | | 01/03 ▸ 11/08 | 164000D210 | 734711 | 600 348 | ALB |
| 1.8 VVTi 16V | ZZT251 | E | 1794 | 1ZZ-FE | M | | 01/03 ▸ 11/08 | 164000D210 | 734711 | 600 348 | ALB |
| 1.8 VVTi 16V | ZZT251 | E | 1794 | 1ZZ-FE | A | | 01/03 ▸ 11/08 | 164000D220 | 734711 | 600 348 | ALB |
| 2.0 D-4 16V,2.0 VVTi 16V | AZT250 | E | 1998 | 1AZ-FE,1AZ-FSE | M | | 01/03 ▸ 11/08 | 164000H110 | 734712 | 625 378 | ALB |
| 2.4 VVTi 16V | AZT251 | E | 2362 | 2AZ-FSE | A | | 09/03 ▸ 11/08 | 164000H110 | 734712 | 625 378 | ALB |
| **AVENSIS (T27) (2008>)** | | | | | | | | | | | |
| 2.0 D-4D 126 16V | ADT270 | D | 1998 | 1ADFTV-DCR/F | M | | 11/08 ▸ | 164000R061 | 735188 | 663 382 | ALB |

# TOYOTA (.../...)

## AVENSIS (T27) (2008>) (.../...)

| | | | CC | | | AC | | | OE | Valeo | DIM. | TECH |
|---|---|---|---|---|---|---|---|---|---|---|---|---|
| 2.2 D-4D 150 16V<br>2.2 D-4D 177 16V | ADT271 | D | 2231 | 2AD-FTV,2ADFHV-DCRL/F | M | | | 11/08 ▸ | 164000R061 | **735188** | 663 382 | ALB |

## AYGO

| | | | | | | | | | | | | |
|---|---|---|---|---|---|---|---|---|---|---|---|---|
| 1.0 VVTi | KGB10R ; KGB10L | E | 998 | 1KR-FE | M | + | | 02/05 ▸ | 164000Q020 | **735069** | 374 326 | ALB |
| 1.0 VVTi | KGB10L ; KGB10R | E | 998 | 1KR-FE | M | - | | 02/05 ▸ | 164000Q010 | **735072** | 374 340 | ALB |
| 1.4 D | WNB10R ; WNB10L | D | 1398 | 2WZTV | M | + | | 05/05 ▸ | 16400YV010 | **735070** | 374 326 | ALB |
| 1.4 D | WNB10R ; WNB10L | D | 1398 | 2WZTV | M | - | | 05/05 ▸ | 16400YV020 | **735070** | 374 326 | ALB |

## CAMRY (82>86)

| | | | | | | | | | | | | |
|---|---|---|---|---|---|---|---|---|---|---|---|---|
| 1.8 | SV10LU ; SV10RU | E | 1832 | 1S-L | M | | TSW | 10/82 ▸ 10/86 | 1640063030 | **819123** | 327 668 | CBS |
| 1.8 | SV10LU ; SV10RU | E | 1832 | 1S-L | A | | | 10/82 ▸ 10/86 | 1640063040 | | 327 668 | CBS |
| 2.0 i | SV11LU ; SV11RU | E | 1995 | 2S-EL,2S-ELC | M | | TSW | 03/83 ▸ 10/86 | 1640063120 | **819123** | 327 668 | CBS |
| 2.0 i | SV11LU ; SV11RU | E | 1995 | 2S-EL,2S-ELC | A | | | 03/83 ▸ 10/86 | 1640063040 | | 327 668 | CBS |
| 1.8 TD | CV10LU ; CV10RU | D | 1839 | 1C-TL | M | | TSW | 08/83 ▸ 08/85 | 1640064110 | **731095** | 327 668 | CBS |
| 1.8 TD | CV10RU ; CV10LU | D | 1839 | 1C-TL | A | | TSW | 08/83 ▸ 08/85 | 1640064120 | **731095** | 327 668 | CBS |
| 1.8 TD | CV10LU | D | 1839 | 1C-TL | A | | TSW | 06/84 ▸ 08/85 | 1640064110 | **731095** | 327 668 | CBS |
| 2.0 TD | CV11LU ; CV11RU | D | 1974 | 2C-TL | M | | TSW | 08/85 ▸ 10/86 | 1640064110 | **731095** | 327 668 | CBS |
| 2.0 TD | CV11LU | D | 1974 | 2C-TL | A | | TSW | 08/85 ▸ 10/86 | 1640064120 | **731095** | 327 668 | CBS |

## CAMRY (86>91)

| | | | | | | | | | | | | |
|---|---|---|---|---|---|---|---|---|---|---|---|---|
| 1.8 | SV20LG ; SV20LU | E | 1832 | 1S-L | M | | TSW | 10/86 ▸ 08/88 | 1640074120 | **731098** | 327 668 | CBS |
| 1.8 | SV20LU ; SV20LG | E | 1832 | 1S-L | M | | TSW 820326 | 10/86 ▸ 08/88 | 1640074450 | **731097** | 325 668 | CBS |
| 1.8 | SV20LU | E | 1832 | 1S-L | A | | TSW 820326 | 10/86 ▸ 08/88 | 1640074450 | **731097** | 325 668 | CBS |
| 2.0 i | SV21LG ; SV21LU | E | 1996 | 3S-FE | M | | TSW | 10/86 ▸ 06/91 | 1640074120 | **731098** | 327 668 | CBS |
| 2.0 i | SV21LU ; SV21LG ; SV25LU | E | 1996 | 3S-FE | M | | TSW 820326 | 10/86 ▸ 06/91 | 1640074450 | **731097** | 325 668 | CBS |
| 2.0 i | SV21LU ; SV21LG | E | 1996 | 3S-FE | A | | TSW 820326 | 10/86 ▸ 06/91 | 1640074140 | **731097** | 325 668 | CBS |
| 2.0 i 16V | SV21LG ; SV21RG<br>SV21LU ; SV21RU | E | 1998 | 3S-FE | M | | TSW | 10/86 ▸ 06/91 | 1640074120 | **731098** | 327 668 | CBS |
| 2.0 i 16V | SV21LG ; SV21LU<br>SV25RU ; SV21RG ; SV25LU ; SV21RU | E | 1998 | 3S-FE | M | | TSW 820326 | 10/86 ▸ 06/91 | 1640074450 | **731097** | 325 668 | CBS |
| 2.0 i 16V | SV21LG ; SV21RG<br>SV21RU ; SV21LU | E | 1998 | 3S-FE | A | | TSW 820326 | 10/86 ▸ 06/91 | 1640074140 | **731097** | 325 668 | CBS |
| 2.0 TD | CV20LU | D | 1974 | 2C-TL | M | | TSW | 10/86 ▸ 06/91 | 1640074120 | **731098** | 327 668 | CBS |

## CAMRY (91>96)

| | | | | | | | | | | | | |
|---|---|---|---|---|---|---|---|---|---|---|---|---|
| 2.2 i 16V | SXV10L ; SXV10R | E | 2164 | 5S-FE | M | | | 06/91 ▸ 08/96 | 1640074750 | **731196** | 425 718 | CBS |
| 2.2 i 16V | SXV10R ; SXV10L | E | 2164 | 5S-FE | A | | | 06/91 ▸ 08/96 | 1640074760 | | 425 742 | |
| 2.2 i 16V | SXV10L ; SXV10R | E | 2164 | 5S-FE | A | | | 02/95 ▸ 07/96 | 1640003061 | **734193** | 425 718 | ALB |
| 3.0 i V6 | VCV10L | E | 2959 | 3VZ-FE | M | | | 06/91 ▸ 09/93 | 1640062090 | | | |
| 3.0 i V6 | VCV10R ; VCV10L | E | 2959 | 3VZ-FE | A | | | 06/91 ▸ 09/93 | 1640062100 | **731684** | 425 718 | ALB |
| 3.0 i V6 | VCV10L ; VCV10R | E | 2959 | 3VZ-FE | A | | | 09/93 ▸ 08/96 | 1640062150 | **731837** | 425 718 | ALB |

## CAMRY (96>2001)

| | | | | | | | | | | | | |
|---|---|---|---|---|---|---|---|---|---|---|---|---|
| 2.2 i 16V | SXV20R ; SXV20L | E | 2164 | 5S-FE | M | | | 08/96 ▸ 07/01 | 164007A290 | **734488** | 400 738 | CBS |
| 2.2 i 16V | SXV20R ; SXV20L | E | 2164 | 5S-FE | A | | | 08/96 ▸ 07/01 | 164007A300 | **734489** | 400 738 | ALB |
| 3.0 i V6 24V | MCV20L ; MCV20R | E | 2995 | 1MZ-FE | A | | | 08/96 ▸ 07/01 | 1640020090 | **734177** | 400 738 | ALB |

## CAMRY (2001>2006)

| | | | | | | | | | | | | |
|---|---|---|---|---|---|---|---|---|---|---|---|---|
| 3.0 i V6 24V | MCV30L ; MCV30R | E | 2995 | 1MZ-FE | A | +/- | | 08/01 ▸ 01/06 | 1640020271 | •**734492** | 400 738 | ALB |
| 2.0 i 16V | ACV31L ; ACV31R | E | 1998 | 1AZ-FE | A | | | 08/01 ▸ 01/06 | 1640028280 | **735214** | 400 738 | ALB |
| 2.4 i 16V | ACV30L ; ACV30R | E | 2362 | 2AZ-FE | A | | | 08/01 ▸ 01/06 | 1640028280 | **735214** | 400 738 | ALB |

## CARINA II (ST15*) (83>87)

| | | | | | | | | | | | | |
|---|---|---|---|---|---|---|---|---|---|---|---|---|
| 1.6 | AT151 | E | 1587 | 4A | M | | | 09/83 ▸ 12/87 | 1640014040 | | | |
| 1.6 | AT151 | E | 1587 | 4A | M | | | 09/83 ▸ 12/87 | 1640026330 | | 377 448 | CBS |
| 1.6 | AT151 | E | 1587 | 4A | A | | TSW | 09/83 ▸ 12/87 | 1640015200 | **730469** | 327 668 | CBS |
| 1.8 i | ST150 | E | 1832 | 1S-EL | M | | | 05/85 ▸ 12/87 | 1640063080 | | 327 668 | CBS |
| 1.8 i | ST150 | E | 1832 | 1S-EL | A | | | 08/85 ▸ 12/87 | 1640063080 | | 327 668 | CBS |
| 2.0 i | ST151 | E | 1995 | 2S-EL | M | | | 04/84 ▸ 12/87 | 1640063080 | | 327 668 | CBS |
| 2.0 i | ST151 | E | 1995 | 2S-EL | A | | | 04/84 ▸ 12/87 | 1640063080 | | 327 668 | CBS |
| 2.0 D | CT150 | D | 1974 | 2C | M | | TSW | 10/83 ▸ 04/84 | 1640064120 | **731095** | 327 668 | CBS |
| 2.0 D | CT150 | D | 1974 | 2C | M | | | 04/84 ▸ 12/87 | 1640064160 | **731698** | 327 668 | ALB |
| 2.0 D | CT150 | D | 1974 | 2C | A | | TSW | 10/83 ▸ 04/84 | 1640064120 | **731095** | 327 668 | CBS |
| 2.0 D | CT150 | D | 1974 | 2C | A | | | 04/84 ▸ 12/87 | 1640064160 | **731698** | 327 668 | ALB |

## CARINA II (ST17*) (87>92)

| | | | | | | | | | | | | |
|---|---|---|---|---|---|---|---|---|---|---|---|---|
| 1.6,1.6 i 16V | AT171L | E | 1587 | 4A-F,4A-FC,4A-FEC | M | + | TSW | 12/87 ▸ 11/92 | 1640015360 | **730471** | 327 668 | CBS |
| 1.6 | AT171R | E | 1587 | 4A-F | M | | TSW | 12/87 ▸ 03/92 | 1640015360 | **730471** | 327 668 | CBS |
| 1.6,1.6 i 16V | AT171L ; AT171R | E | 1587 | 4A-F,4A-FC,4A-FEC | M | | TSW | 12/87 ▸ 11/92 | 1640016150 | **730471** | 327 668 | CBS |

Radiator Radiateur Motorkühler Radiatore di raffreddamento Radiator Radyatör Радиатор Radiador vízhűtő Vodní chladič Radiator Ψυγείο



• **New** Nouveau **Nuevo** Novo **Nuovo** Nieuw **Neu** Nowość **Yeni** Новый Νέο **Novy**

# TOYOTA (.../...)

## CARINA II (ST17*) (87>92) (.../...)

| | | | CC | | AC | | | OE | Valeo | DIM. | | TECH |
|---|---|---|---|---|---|---|---|---|---|---|---|---|
| 1.6,1.6 i 16V | AT171L ; AT171R | E | 1587 | 4A-F,4A-FC,4A-FEC | A | | TSW | 12/87 ▸ 03/92 | 1640015380 | **731105** | 327 | 668 | CBS |
| 1.6,1.6 i 16V | AT171L | E | 1587 | 4A-F,4A-FC,4A-FEC | A | | TSW | 12/87 ▸ 03/92 | 1640016200 | **731105** | 327 | 668 | CBS |
| 1.6 i 16V | AT171L | E | 1587 | 4A-FEC | A | | TSW | 11/89 ▸ 03/92 | 1640016330 | **730471** | 327 | 668 | CBS |
| 2.0 i 16V | ST171L ; ST171R | E | 1998 | 3S-FE,3S-FEC | M | | | 12/87 ▸ 03/92 | 1640074370 | | 325 | 666 | CBS |
| 2.0 i 16V | ST171R ; ST171L | E | 1998 | 3S-FE,3S-FEC | A | | TSW 820326 | 12/87 ▸ 03/92 | 1640074350 | **731110** | 327 | 668 | CBS |
| 2.0 i 16V | ST171L ; ST171R | E | 1998 | 3S-FE,3S-FEC | A | | | 12/87 ▸ 03/92 | 1640074370 | | 325 | 666 | CBS |
| 2.0 D | CT170R ; CT170L | D | 1974 | 2C | M | | TSW | 12/87 ▸ 11/92 | 1640064460 | **731095** | 327 | 668 | CBS |

## CARINA E (92>97)

| | | | | | | | | | | | | | |
|---|---|---|---|---|---|---|---|---|---|---|---|---|---|
| 1.6 i 16V | AT190R ; AT190L | E | 1587 | 4A-FE | M | | TSW | 02/92 ▸ 12/97 | 1640016470 | **731565** | 325 | 661 | ALB |
| 1.6 i 16V | AT190L ; AT190R | E | 1587 | 4A-FE | A | | TSW | 02/92 ▸ 12/97 | 1640016481 | **731685** | 325 | 658 | ALB |
| 1.8 i 16V | AT191R ; AT191L | E | 1762 | 7A-FE | M | | TSW | 11/94 ▸ 10/97 | 1640016470 | **731565** | 325 | 661 | ALB |
| 1.8 i 16V | AT191L | E | 1762 | 7A-FE | M | | TSW | 12/94 ▸ 10/97 | 1640016481 | **731685** | 325 | 658 | ALB |
| 1.8 i 16V | AT191L ; AT191R | E | 1762 | 7A-FE | A | | TSW | 01/96 ▸ 10/97 | 1640016481 | **731685** | 325 | 658 | ALB |
| 2.0 i 16V | ST191R ; ST191L | E | 1998 | 3S-FE,3S-GE | M | | | 02/92 ▸ 10/97 | 1640074790 | **731830** | 325 | 661 | ALB |
| 2.0 i 16V | ST191L ; ST191R | E | 1998 | 3S-FE,3S-GE | M | | | 02/92 ▸ 10/97 | 1640074840 | **731831** | 325 | 661 | ALB |
| 2.0 i 16V | ST191R ; ST191L | E | 1998 | 3S-FE | M | | | 02/92 ▸ 10/97 | 1640074810 | **731682** | 325 | 658 | ALB |
| 2.0 i 16V | ST191R ; ST191L | E | 1998 | 3S-FE | A | | | 02/92 ▸ 10/97 | 1640074790 | **731830** | 325 | 661 | ALB |
| 2.0 D | CT190L ; CT190R | D | 1974 | 2C | M | | | 02/92 ▸ 01/96 | 1640064731 | **731569** | 375 | 699 | CBS |

## CELICA (TA/AA6) (77>85)

| | | | | | | | | | | | | | |
|---|---|---|---|---|---|---|---|---|---|---|---|---|---|
| 1.6 16V | AA63LB ; AA63RB | E | 1587 | 4A-GE | M | | | 08/83 ▸ 07/85 | 1640015081 | | 377 | 448 | CBS |
| 1.6 | TA60LB ; LBTA60 | E | 1588 | 2T,2T-B | M | | | 08/81 ▸ 07/85 | 1640026370 | | 377 | 448 | CBS |
| 1.6 | TA60LB | E | 1588 | 2T | A | | | 08/81 ▸ 08/83 | 1640026340 | | 377 | 608 | CBS |
| 2.0 | RA63RB ; RA63LB ; RA63BC | E | 1968 | 18R-G | M | | | 08/81 ▸ 08/83 | 1640037090 | | 377 | 608 | CBS |
| 2.0 | RA61LB ; RA61RB ; RA60RB ; RA60LB ; HA61LB | E | 1973 | 21R,21R-C | M | | | 08/81 ▸ 07/85 | 1640037090 | | 377 | 608 | CBS |
| 2.0 | RA60RB | E | 1973 | 21R-C | A | | | 08/81 ▸ 08/83 | 1640037090 | | 377 | 608 | CBS |
| 2.0 | SA63RB | E | 1995 | 2S-C | M | | | 08/83 ▸ 08/84 | 1640063010 | | 375 | 610 | CBS |
| 2.0 | SA63RB | E | 1995 | 2S-C | A | | | 08/83 ▸ 08/84 | 1640074030 | | 377 | 608 | CBS |

## CELICA (ST16) (85>89)

| | | | | | | | | | | | | | |
|---|---|---|---|---|---|---|---|---|---|---|---|---|---|
| 1.6 | AT160L | E | 1587 | 4A-L | M | | | 08/85 ▸ 08/89 | 1640016010 | | 325 | 668 | CBS |
| 1.6,1.6 i 16V | AT160L | E | 1587 | 4A-GEL,4A-GELC,4A-L | M | | TSW | 08/85 ▸ 08/89 | 1640015200 | **730469** | 327 | 668 | CBS |
| 1.6 i 16V | AT160L | E | 1587 | 4A-GEL,4A-GELC | M | | TSW | 08/85 ▸ 08/89 | 1640015190 | **732561** | 327 | 668 | CBS |
| 2.0 i | ST162R ; ST162L | E | 1998 | 3S-GEL,3S-GELC | M | | TSW | 08/85 ▸ 08/89 | 1640074060 | **731115** | 327 | 668 | CBS |
| 2.0 i Turbo | ST165R ; ST165L | E | 1998 | 3S-GTE | M | | TSW 820325 | 10/87 ▸ 05/89 | 1640074640 | **734180** | 327 | 668 | CBS |
| 2.0 i | ST162R ; ST162L | E | 1998 | 3S-GEL | A | | TSW | 08/85 ▸ 08/89 | 1640074070 | **731114** | 327 | 668 | CBS |

## CELICA (ST18) (89>93)

| | | | | | | | | | | | | | |
|---|---|---|---|---|---|---|---|---|---|---|---|---|---|
| 1.6 16V | AT180L ; AT180R | E | 1587 | 4A-FE | M | | TSW | 10/89 ▸ 10/93 | 1640016301 | **734839** | 325 | 699 | CBS |
| 2.0 16V | ST182R ; ST182L | E | 1998 | 3S-GE | M | | TSW | 10/89 ▸ 10/93 | 1640074540 | **731696** | 325 | 699 | ALB |
| 2.0 Turbo | ST185L ; ST185R | E | 1998 | 3S-GTE | M | | | 10/89 ▸ 10/93 | 1640074560 | **734181** | 325 | 699 | ALB |
| 2.0 16V | ST182R ; ST182L | E | 1998 | 3S-GE | A | | | 10/89 ▸ 10/93 | 1640074550 | **731694** | 325 | 698 | ALB |
| 2.0 Turbo | ST185R ; ST185L | E | 1998 | 3S-GTE | A | | | 08/91 ▸ 10/93 | 1640074560 | **734181** | 325 | 699 | ALB |

## CELICA (ST200) (93>99)

| | | | | | | | | | | | | | |
|---|---|---|---|---|---|---|---|---|---|---|---|---|---|
| 1.8 i 16V | AT200R ; AT200L | E | 1762 | 7A-FE | M | | TSW | 11/93 ▸ 07/99 | 1640016530 | **731441** | 347 | 634 | ALB |
| 2.0 i,2.0 i Turbo | ST202R ; ST205L<br>ST205R | E | 1998 | 3S-GE1,3S-GTE | M | | | 11/93 ▸ 07/99 | 164007A080 | **732542** | 350 | 638 | CBS |
| 2.0 i | ST202L | E | 1998 | 3S-GE1 | M | | | 11/93 ▸ 07/99 | 164007A060 | **732542** | 350 | 638 | CBS |

## CELICA (ZT230) (99>)

| | | | | | | | | | | | | | |
|---|---|---|---|---|---|---|---|---|---|---|---|---|---|
| 1.8 VVT-i 16V | ZZT230 | E | 1794 | 1ZZ-FE | M | | | 08/99 ▸ 09/05 | 1640022060 | **732413** | 650 | 318 | ALB |
| 1.8 i 16V | ZZT231 | E | 1796 | 2ZZ-GE | M | | | 08/00 ▸ 09/05 | 1640022060 | **732413** | 650 | 318 | ALB |

## COROLLA (50) (79>83)

| | | | | | | | | | | | | | |
|---|---|---|---|---|---|---|---|---|---|---|---|---|---|
| 1.8 | TE72LE | E | 1770 | 3T-C | M | | TSW | 08/79 ▸ 05/83 | 1640016200 | **731105** | 327 | 668 | CBS |
| 1.8 D | CE70LG | D | 1839 | 1C | M | | | 05/83 ▸ 04/84 | 1640064080 | **731698** | 327 | 668 | ALB |

## COROLLA (80) (83>87)

| | | | | | | | | | | | | | |
|---|---|---|---|---|---|---|---|---|---|---|---|---|---|
| 1.3 | AE80RE ; AE80LE | E | 1296 | 2A-L | M | | TSW | 05/83 ▸ 10/84 | 1640014060 | **730468** | 327 | 568 | CBS |
| 1.3 | AE80RE | E | 1296 | 2A-LC | M | | TSW | 11/84 ▸ 05/86 | 1640015200 | **730469** | 327 | 668 | CBS |
| 1.3 | AE80RE | E | 1296 | 2A-LC | M | | TSW | 11/84 ▸ 05/86 | 1640015190 | **732561** | 327 | 668 | CBS |
| 1.3 | AE80LE ; AE80RE | E | 1296 | 2A-L | A | | | 05/83 ▸ 10/84 | 1640014040 | | | | |
| 1.3 | AE80LE ; AE80RE | E | 1296 | 2A-L | A | | TSW | 05/83 ▸ 05/85 | 1640014050 | **730469** | 327 | 668 | CBS |
| 1.3 | EE80LE ; EE80RE | E | 1296 | 2E-L | A | | | 08/84 ▸ 09/87 | 1640011040 | | 327 | 668 | CBS |
| 1.3 | AE80RE | E | 1296 | 2A-LC | A | | TSW | 11/84 ▸ 05/86 | 1640015200 | **730469** | 327 | 668 | CBS |
| 1.6,1.6 i 16V | AE86LE ; AE86RE | E | 1587 | 4A,4A-C,4A-GE,4A-GEC | M | | | 05/83 ▸ 09/87 | 1640015210 | **730470** | 327 | 568 | CBS |
| 1.6,1.6 i 16V | AE82RE ; AE82LE<br>AE82RC | E | 1587 | 4A-GEL,4A-GELC,4A-L,4A-LC | M | | TSW | 05/83 ▸ 09/87 | 1640015200 | **730469** | 327 | 668 | CBS |

# TOYOTA (.../...)

| Type Ctr. | | CC | | AC | | 2+3 | OE | Valeo | DIM. | TECH |
|---|---|---|---|---|---|---|---|---|---|---|
| **COROLLA (80) (83>87) (.../...)** | | | | | | | | | | |
| 1.6,1.6 i 16V AE82RE ; AE82RC AE82LE | E | 1587 | 4A-GEL,4A-GELC,4A-L,4A-LC | M | | TSW | 05/83 ▸ 09/87 | 1640015190 | **732561** | 327 668 | CBS |
| 1.6 i 16V AE82RE ; AE82LE | E | 1587 | 4A-GEL | M | | TSW | 10/84 ▸ 09/87 | 1640016080 | **732561** | 327 668 | CBS |
| 1.6 AE82RE ; AE82LE | E | 1587 | 4A-L,4A-LC | A | | TSW | 05/83 ▸ 09/87 | 1640014050 | **730469** | 327 668 | CBS |
| 1.6 AE82RE | E | 1587 | 4A-LC | A | | TSW | 11/84 ▸ 09/87 | 1640015200 | **730469** | 327 668 | CBS |
| 1.8 D CE80LE ; CE80RE | D | 1839 | 1C-L | M | | TSW | 05/83 ▸ 09/87 | 1640064070 | **731095** | 327 668 | CBS |
| **COROLLA (90) (87>92)** | | | | | | | | | | |
| 1.3,1.3 i EE90LA ; EE90RA | E | 1296 | 2E,2E-E | M | | TSW 820326 | 05/87 ▸ 05/92 | 1640011170 | **731119** | 327 568 | CBS |
| 1.3,1.3 i EE90LA | E | 1296 | 2E,2E-E | M | | TSW | 05/87 ▸ 05/92 | 1653515020 | **730471** | 327 668 | CBS |
| 1.3 EE90LA | E | 1296 | 2E | A | | TSW | 05/87 ▸ 05/92 | 1653515020 | **730471** | 327 668 | CBS |
| 1.3,1.3 i EE90LA | E | 1296 | 2E,2E-E | A | | TSW | 05/87 ▸ 05/92 | 1640015380 | **731105** | 327 668 | CBS |
| 1.6 16V AE92RA ; AE92LA | E | 1587 | 4A-GE | M | | | 05/87 ▸ 05/92 | 1640016130 | **731106** | 327 668 | CBS |
| 1.6 16V AE92LA ; AE92RA | E | 1587 | 4A-GE | M | | | 05/87 ▸ 05/92 | 1640016140 | | 327 688 | CBS |
| 1.6,1.6 16V AE92LA | E | 1587 | 4A-F,4A-FE | M | | TSW | 05/87 ▸ 05/92 | 1640015371 | **730471** | 327 668 | CBS |
| 1.6,1.6 16V AE92LA ; AE92RA | E | 1587 | 4A-F,4A-FE | M | | TSW | 05/87 ▸ 05/92 | 1640016150 | **730471** | 327 668 | CBS |
| 1.6,1.6 16V AE95RA ; AE95LA | E | 1587 | 4A-F,4A-FE | M | | TSW | 10/87 ▸ 05/92 | 1640016330 | **730471** | 327 668 | CBS |
| 1.6,1.6 16V AE95LC ; AE95RC | E | 1587 | 4A-F,4A-FE | M | | | 02/88 ▸ 05/92 | 1640015401 | | 327 688 | CBS |
| 1.6,1.6 16V AE95RC ; AE95LC | E | 1587 | 4A-F,4A-FE | M | | | 02/88 ▸ 05/92 | 1640015431 | | 327 688 | CBS |
| 1.6,1.6 16V AE92LA ; AE92RA | E | 1587 | 4A-F,4A-FE | A | | TSW | 05/87 ▸ 05/92 | 1640015380 | **731105** | 327 668 | CBS |
| 1.8 D CE90LA ; CE90RA | D | 1839 | 1C | M | | TSW | 05/87 ▸ 05/92 | 1640064440 | **731095** | 327 668 | CBS |
| **COROLLA (100) (92>97)** | | | | | | | | | | |
| 1.3 EE100L | E | 1296 | 2E | M | | TSW | 05/92 ▸ 04/97 | 1640015690 | **731441** | 347 634 | ALB |
| 1.3 16V EE101L ; EE101R | E | 1332 | 4E-FE | M | | TSW | 05/92 ▸ 04/97 | 1640015690 | **731441** | 347 634 | ALB |
| 1.3 16V EE101R ; EE101L | E | 1332 | 4E-FE | M | | TSW | 05/92 ▸ 04/97 | 1640016491 | **731441** | 347 634 | ALB |
| 1.3 16V EE101L ; EE101R | E | 1332 | 4E-FE | A | | TSW 820338 | 05/92 ▸ 04/97 | 1640015501 | **731464** | 350 638 | CBS |
| 1.6 16V AE101L ; AE101R | E | 1587 | 4A-FE | M | | TSW | 05/92 ▸ 04/97 | 1640015690 | **731441** | 347 634 | ALB |
| 1.6 16V AE101L ; AE101R | E | 1587 | 4A-FE | A | | TSW 820338 | 05/92 ▸ 04/97 | 1640015501 | **731464** | 350 638 | CBS |
| 1.8 16V AE102R ; AE102L AE103L | E | 1762 | 7A-FE | M | | TSW | 11/92 ▸ 04/97 | 1640015690 | **731441** | 347 634 | ALB |
| 1.8 16V AE102R ; AE102L | E | 1762 | 7A-FE | M | | TSW | 11/92 ▸ 05/95 | 1640016491 | **731441** | 347 634 | ALB |
| 1.8 16V AE103L | E | 1762 | 7A-FE | M | | TSW | 05/95 ▸ 04/97 | 1640015481 | **731441** | 347 634 | ALB |
| 2.0 D CE100L ; CE100R | D | 1974 | 2C | M | | TSW | 05/92 ▸ 04/97 | 1640064631 | **731568** | 350 723 | CBS |
| **COROLLA (110) (97>99)** | | | | | | | | | | |
| 1.3 i 12V EE110L | E | 1296 | 2E | M | | TSW | 04/97 ▸ 09/99 | 1640016660 | **731441** | 347 634 | ALB |
| 1.3 i 16V EE111R ; EE111L | E | 1332 | 4E-FE | M | + | TSW | 04/97 ▸ 09/99 | 1640016660 | **731441** | 347 634 | ALB |
| 1.3 i 16V EE111L ; EE111R | E | 1332 | 4E-FE | M | - | TSW 820338 | 04/97 ▸ 09/99 | 1640016790 | **732614** | 350 518 | ALB |
| 1.3 i 16V EE111R ; EE111L | E | 1332 | 4E-FE | M | | TSW 820338 | 04/97 ▸ 09/99 | 1640016620 | **732614** | 350 518 | ALB |
| 1.3 i 16V EE111R ; EE111L | E | 1332 | 4E-FE | M | | TSW | 04/97 ▸ 09/99 | 1640016660 | **731441** | 347 634 | ALB |
| 1.3 i 16V EE111L ; EE111R | E | 1332 | 4E-FE | M | | TSW 820338 | 04/97 ▸ 09/99 | 1640016790 | **732614** | 350 518 | ALB |
| 1.3 i 16V EE111L ; EE111R | E | 1332 | 4E-FE | A | | TSW 820338 | 04/97 ▸ 09/99 | 1640016690 | **731464** | 350 638 | CBS |
| 1.6 i 16V AE111L ; AE111R | E | 1587 | 4A-FE | M | + | TSW | 04/97 ▸ 09/99 | 1640016660 | **731441** | 347 634 | ALB |
| 1.6 i 16V AE111L | E | 1587 | 4A-FE | M | - | TSW 820338 | 04/97 ▸ 09/99 | 1640016790 | **732614** | 350 518 | ALB |
| 1.6 i 16V AE111R ; AE111L | E | 1587 | 4A-FE | M | | TSW 820338 | 04/97 ▸ 09/99 | 1640016620 | **732614** | 350 518 | ALB |
| 1.6 i 16V AE111L ; AE111R | E | 1587 | 4A-FE | M | | TSW 820338 | 04/97 ▸ 09/99 | 1640016790 | **732614** | 350 518 | ALB |
| 1.6 i 16V AE111L ; AE111R | E | 1587 | 4A-FE | A | | TSW 820338 | 04/97 ▸ 09/99 | 1640016690 | **731464** | 350 638 | CBS |
| 1.8 i 16V AE115L | E | 1762 | 7A-FE | M | + | TSW | 04/97 ▸ 09/99 | 1640016680 | **731441** | 347 634 | ALB |
| 1.8 i 16V AE115L | E | 1762 | 7A-FE | M | - | TSW | 04/97 ▸ 09/99 | 1640016660 | **731441** | 347 634 | ALB |
| 1.8 i | E | 1762 | 7A-FE | M | | | 04/97 ▸ | 164000D030 | •**735415** | 348 628 | ALB |
| 2.0 D CE110R ; CE110L | D | 1974 | 2C-E | M | - | TSW | 04/97 ▸ 09/99 | 164006A070 | **731568** | 350 723 | CBS |
| 2.0 D CE110L ; CE110R | D | 1974 | 2C-E | M | | TSW | 04/97 ▸ 09/99 | 164006A070 | **731568** | 350 723 | CBS |
| **COROLLA (110) (99>2001)** | | | | | | | | | | |
| 1.3 i 12V EE110L | E | 1296 | 2E | M | | TSW | 10/99 ▸ 07/01 | 1640016660 | **731441** | 347 634 | ALB |
| 1.8 i 16V AE115L | E | 1762 | 7A-FE | M | + | TSW | 10/99 ▸ 10/01 | 1640016680 | **731441** | 347 634 | ALB |
| 1.8 i 16V AE115L | E | 1762 | 7A-FE | M | | TSW | 10/99 ▸ 10/01 | 1640016660 | **731441** | 347 634 | ALB |
| **COROLLA (120) (2001>)** | | | | | | | | | | |
| 1.4 i 16V ZZE120 | E | 1398 | 4ZZ-FE | M | | | 10/01 ▸ 10/06 | 1640021140 | **734199** | 600 348 | ALB |
| 1.4 i 16V ZZE120 | E | 1398 | 4ZZ-FE | M | | | 11/01 ▸ 02/07 | 164000D200 | | 600 346 | ALB |
| 1.4 i 16V ZZE120 | E | 1398 | 4ZZ-FE | M | | | 01/02 ▸ 06/04 | 164000D210 | **734711** | 600 348 | ALB |
| 1.6 VVT-i 16V ZZE121 | E | 1598 | 3ZZ-FE | M | | | 10/01 ▸ 10/06 | 1640021140 | **734199** | 600 348 | ALB |
| 1.6 VVT-i 16V ZZE121 | E | 1598 | 3ZZ-FE | M | | | 11/01 ▸ 02/07 | 164000D200 | | 600 346 | ALB |
| 1.6 VVT-i 16V ZZE121 | E | 1598 | 3ZZ-FE | M | | | 01/02 ▸ 06/04 | 164000D210 | **734711** | 600 348 | ALB |
| 1.6 VVT-i 16V ZZE121 | E | 1598 | 3ZZ-FE | A | | | 10/01 ▸ 10/06 | 1640021180 | **734200** | 600 372 | ALB |
| 1.6 VVT-i 16V ZZE121 | E | 1598 | 3ZZ-FE | A | | | 11/01 ▸ 02/07 | 164000D220 | **734711** | 600 348 | ALB |
| 1.8 i 16V ZZE123 | E | 1796 | 2ZZ-GE | M | | | 11/01 ▸ 02/07 | 164000D210 | **734711** | 600 348 | ALB |
| 1.4 D4-D NDE120 | D | 1364 | 1NDTV | M | +/- | | 08/04 ▸ 02/07 | 164000N031 | •**735574** | 625 378 | ALB |

Radiator Radiateur Motorkühler Radiatore di raffreddamento Radiator Radyatör Radiador Радиатор vízhűtő Vodní chladič Radiator Ψυγείο



• **New** Nouveau **Nuevo** Novo **Nuovo** Nieuw **Neu** Nowość **Yeni** Новый Νέο **Nový**

# TOYOTA (.../...)

| | Type Ctr. | | CC | | | AC | | | OE | Valeo | DIM. | | TECH |
|---|---|---|---|---|---|---|---|---|---|---|---|---|---|
| **COROLLA (120) (2001>) (.../...)** | | | | | | | | | | | | | |
| 1.4 D | | D | 1364 | 1ND-TV | M | | | 07/04 ▸ | 164006A290 | •735567 | 625 | 378 | ALB |
| 2.0 D4-D 16V | CDE120 | D | 1995 | 1CDFTV-DCR,1CDFTV-DCRL 1CDFTV-HDCR | M | | | 10/01 ▸ 02/07 | 1640027040 | 734199 | 600 | 348 | ALB |
| **COROLLA (150) (2006>)** | | | | | | | | | | | | | |
| 1.3 VVT-i 16V | NRE150 | E | 1329 | 1NRFE-HTWC | M | | | 12/08 ▸ 04/10 | 1640022160 | 735250 | 600 | 370 | |
| 1.6 VVT-i 16V | ZRE151 | E | 1598 | 1ZRFAE-HTWVM | M | | | 12/08 ▸ 02/10 | 1640022160 | 735250 | 600 | 370 | |
| 1.4 D-4D | NDE150 | D | 1364 | 1NDTV-DCR,1NDTV-DCRL | M | | | 11/06 ▸ | 164000N060 | 735213 | 550 | 370 | |
| **COROLLA VERSO (2001>2003)** | | | | | | | | | | | | | |
| 1.6 VVTi 16V | ZZE121 | E | 1598 | 3ZZ-FE | M | | | 10/01 ▸ 12/03 | 1640021140 | 734199 | 600 | 348 | ALB |
| 1.8 VVTi 16V | ZZE122 | E | 1794 | 1ZZ-FE | M | | | 09/01 ▸ 12/03 | 1640021140 | 734199 | 600 | 348 | ALB |
| 1.8 VVTi 16V | ZZE122 | E | 1794 | 1ZZ-FE | A | | | 09/01 ▸ 12/03 | 1640021180 | 734200 | 600 | 372 | ALB |
| 2.0 D4-D 16V | CDE120 | D | 1995 | 1CDFTV-DCR,1CDFTV-HDCR | M | | | 10/01 ▸ 12/03 | 1640027040 | 734199 | 600 | 348 | ALB |
| **COROLLA VERSO (2004>2009)** | | | | | | | | | | | | | |
| 1.6 VVTi | ZNR10L ; ZNR10R | E | 1598 | 3ZZ-FE | M | | | 02/04 ▸ 02/09 | 164000D210 | 734711 | 600 | 348 | ALB |
| 2.2 D4-D 16V | AUR10R ; AUR10L | D | 2231 | 2AD-FTV,2ADFHV-DCRL | M | +/- | | 08/05 ▸ 02/09 | 164000R010 | •735573 | 625 | 402 | ALB |
| 2.2 D4-D 16V | AUR10L ; AUR10R | D | 2231 | 2AD-FTV,2ADFHV-DCRL | M | +/- | | 08/05 ▸ 02/09 | 164000R011 | •735572 | 625 | 402 | ALB |
| **CORONA (ST15) (83>87)** | | | | | | | | | | | | | |
| 1.6 | ST151 | E | 1587 | 4A | M | | TSW | 10/83 ▸ 12/87 | 1640014060 | 730468 | 327 | 568 | CBS |
| 1.6 | ST151 | E | 1587 | 4A | A | | TSW | 10/83 ▸ 12/87 | 1640014050 | 730469 | 327 | 668 | CBS |
| **CRESSIDA III (84>88)** | | | | | | | | | | | | | |
| 2.8 | G3-MX7 | E | 2759 | 5M-E,5M-GE | M | | | 08/84 ▸ 08/88 | 1640070100 | •735583 | 377 | 668 | CBS |
| 2.8 | G3-MX7 | E | 2759 | 5M-E,5M-GE | A | | | 08/84 ▸ 08/86 | 1640070100 | •735583 | 377 | 668 | CBS |
| **LAND CRUISER (BJ80)** | | | | | | | | | | | | | |
| 4.0 i | FJ80LG | E | 3995 | 3F-E | A | | | 01/90 ▸ 08/92 | 1640061180 | | 426 | 736 | ALB |
| 4.5 i | FZJ80L | E | 4477 | 1FZ-FE | A | | | 08/92 ▸ 01/95 | 1640066040 | 734185 | 427 | 718 | CBS |
| 4.2 D | HZJ80L | D | 4164 | 1HZ | M | | | 01/90 ▸ 08/96 | 1640017020 | 732415 | 427 | 726 | ALB |
| 4.2 TD | HDJ80L ; HDJ80R | D | 4164 | 1HD-FT,1HD-T | M | | | 01/90 ▸ 01/98 | 1640017040 | | 427 | 720 | CBS |
| 4.2 D | HZJ80L | D | 4164 | 1HZ | M | | | 08/96 ▸ 01/98 | 1640017021 | 734189 | 425 | 704 | CBS |
| 4.2 TD | HDJ80L ; HDJ80R | D | 4164 | 1HD-FT | M | | | 08/96 ▸ 01/98 | 1640017240 | 734189 | 425 | 704 | CBS |
| 4.2 TD | HDJ80L ; HDJ80R | D | 4164 | 1HD-T | A | | | 01/90 ▸ 01/95 | 1640017060 | | 427 | 726 | ALB |
| 4.2 D | HZJ80L | D | 4164 | 1HZ | A | | | 01/90 ▸ 08/91 | 1640017030 | | 427 | 726 | ALB |
| **LAND CRUISER (HD/UZ 10)** | | | | | | | | | | | | | |
| 4.7 i | UZJ100 | E | 4664 | 2UZ-FE | A | | | 01/98 ▸ 08/02 | 1640050211 | 734192 | 510 | 692 | ALB |
| 4.7 i | UZJ100 | E | 4664 | 2UZ-FE | A | | | 01/98 ▸ | 1640050210 | 734192 | 510 | 692 | ALB |
| 4.2 TD | HDJ100 | D | 4164 | 1HD-FTE | M | | | 08/00 ▸ 08/02 | 1640066111 | 734191 | 510 | 695 | ALB |
| 4.2 TD | HDJ100 | D | 4164 | 1HD-FTE | A | | | 01/98 ▸ | 1640066120 | 734190 | 510 | 695 | ALB |
| 4.2 TD | HDJ100 | D | 4164 | 1HD-FTE | A | | | 01/98 ▸ 07/03 | 1640066121 | 734190 | 510 | 695 | ALB |
| **LAND CRUISER (KZ/VZ9)** | | | | | | | | | | | | | |
| 3.4 i V6 | VZJ95L ; VZJ90L | E | 3378 | 5VZ-FE | M | | | 04/96 ▸ 09/02 | 1640075160 | 734204 | 575 | 662 | ALB |
| 3.4 i V6 | VZJ90L ; VZJ95L VZJ95R | E | 3378 | 5VZ-FE | A | | | 04/96 ▸ 09/02 | 1640075180 | | | | |
| 3.0 TD | KZJ90R ; KZJ90L KZJ95L ; KZJ95R | D | 2982 | 1KZ-TE | M | | | 04/96 ▸ 09/02 | 1640067130 | 734205 | 575 | 643 | ALB |
| 3.0 TD | KZJ95L ; KZJ90L KZJ95R | D | 2982 | 1KZ-TE | A | | | 04/96 ▸ 09/02 | 1640067140 | 734206 | 575 | 634 | ALB |
| **LAND CRUISER (2002>)** | | | | | | | | | | | | | |
| 4.0 i VVT-i 24V | GRJ125 | E | 3956 | 1GR-FE | A | | | 08/04 ▸ 08/09 | 1640031351 | •735569 | 650 | 590 | ALB |
| 3.0 D-4D 16V | KDJ125 ; KDJ120 | D | 2982 | 1KD-FTV | A | +/- | | 09/02 ▸ 07/03 | 1640030140 | •735568 | 650 | 591 | ALB |
| **MR 2 (AW11)** | | | | | | | | | | | | | |
| 1.6 i 16V | AW11RW ; AW11LW | E | 1587 | 4A-GEL,4A-GELC | M | | | 11/84 ▸ 10/89 | 1640016120 | 731199 | 570 | 318 | CBS |
| 1.6 i 16V | AW11LW ; AW11RW | E | 1587 | 4A-GEL,4A-GELC | M | | | 11/84 ▸ 08/86 | 1640016030 | 731199 | 570 | 318 | CBS |
| **MR 2 (AW20)** | | | | | | | | | | | | | |
| 2.0 i 16V | SW20LA ; SW20RA | E | 1998 | 3S-GE,3S-GEC,3S-GEW | M | | TSW | 10/89 ▸ 11/99 | 1640074600 | 732416 | 672 | 320 | CBS |
| 2.0 i 16V | SW20KA | E | 1998 | 3S-FE | M | | TSW | 12/89 ▸ 08/92 | 1640074610 | 732416 | 672 | 320 | CBS |
| 2.0 i 16V | SW20RA | E | 1998 | 3S-FE | A | | TSW | 12/89 ▸ 12/91 | 1640074600 | 732416 | 672 | 320 | CBS |
| **MR 2 (AW30)** | | | | | | | | | | | | | |
| 1.8 VVT-i 16V | ZZW30L ; ZZW30R | E | 1794 | 1ZZ-FE | M | | | 12/99 ▸ 09/05 | 1640022110 | 732417 | 650 | 318 | CBS |
| **PASEO (95>99)** | | | | | | | | | | | | | |
| 1.5 i 16V | EL54LD ; EL54RD | E | 1496 | 5E-FE | A | | TSW 820338 | 08/95 ▸ 07/99 | 1640011830 | 734176 | 325 | 638 | ALB |

# TOYOTA (.../...)

| Type Ctr. | | CC | | AC | | 2+3 | OE | Valeo | DIM. | TECH |
|---|---|---|---|---|---|---|---|---|---|---|
| **PASEO (95>99) (.../...)** | | | | | | | | | | |
| 1.5 i 16V EL54LD ; EL54RD | E | 1496 | 5E-FE | A | | TSW 820338 | 08/95 ▸ 12/97 | 1640011690 | **734176** | 325 638 | ALB |
| **PICNIC (96>2001)** | | | | | | | | | | |
| 2.0 i 16V SXM10L ; SXM10R | E | 1998 | 3S-FEC | M | | | 09/96 ▸ 05/01 | 164007A271 | **732420** | 348 695 | ALB |
| 2.0 i 16V SXM10R ; SXM10L | E | 1998 | 3S-FEC | A | | | 09/96 ▸ 05/01 | 164007A282 | **732420** | 348 695 | ALB |
| 2.2 TD CXM10L ; CXM10R | D | 2184 | 3C-TE | M | | | 09/97 ▸ 05/01 | 164006A180 | **734850** | 475 699 | ALB |
| **PREVIA (TCR) (90>2000)** | | | | | | | | | | |
| 2.4 TCR10R ; TCR21R ; TCR20R ; TCR11R | E | 2438 | 2TZ-FE | M | | | 05/90 ▸ 08/91 | 1640076091 | **732476** | 427 668 | CBS |
| 2.4 TCR11R ; TCR10L ; TCR21L ; TCR20L ; TCR11L | E | 2438 | 2TZ-FE | M | | | 05/90 ▸ 08/91 | 1640076071 | **732476** | 427 668 | CBS |
| 2.4 TCR10R ; TCR11R | E | 2438 | 2TZ-FE | M | | | 08/91 ▸ 01/00 | 1640076092 | **732476** | 427 668 | CBS |
| 2.4 TCR11L ; TCR20L ; TCR10L ; TCR21L ; TCR11R | E | 2438 | 2TZ-FE | M | | | 08/91 ▸ 01/00 | 1640076072 | **732476** | 427 668 | CBS |
| 2.4 TCR10L | E | 2438 | 2TZ-FE | M | | | 08/93 ▸ 01/00 | 1640076062 | **731833** | 402 715 | CBS |
| 2.4 TCR21R ; TCR11R ; TCR11L ; TCR20R ; TCR10R | E | 2438 | 2TZ-FE | A | | | 05/90 ▸ 08/91 | 1640076061 | **731833** | 402 715 | CBS |
| 2.4 TCR21R ; TCR20R ; TCR10R ; TCR11R ; TCR11L | E | 2438 | 2TZ-FE | A | | | 08/91 ▸ 01/00 | 1640076062 | **731833** | 402 715 | CBS |
| **PREVIA (R30) (2000>)** | | | | | | | | | | |
| 2.4 VVTi 16V ACR30L ; ACR30R | E | 2362 | 2AZ-FE | A | | | 02/00 ▸ 01/06 | 1640028100 | **734201** | 450 738 | ALB |
| **PRIUS II** | | | | | | | | | | |
| 1.5 i 16V NHW20R ; NHW20L | E | 1497 | 1NZ-FXE | A | | | 08/03 ▸ 03/09 | 1604121280 | •**735449** | 600 351 | ALM |
| **RAV4 (94>2000)** | | | | | | | | | | |
| 2.0 i 16V SXA11L ; SXA10L SXA11R ; SXA10R | E | 1998 | 3S-FE,3S-FEC | M | | | 04/94 ▸ 09/97 | 164007A122 | **734466** | 350 698 | ALB |
| 2.0 i 16V SXA11R ; SXA10R SXA10L ; SXA11L | E | 1998 | 3S-FE,3S-FEC | M | | | 04/94 ▸ | 164007A110 | **734172** | 350 698 | ALB |
| 2.0 i 16V SXA10R ; SXA10L SXA11L ; SXA11R | E | 1998 | 3S-FE,3S-FEC | M | | | 09/97 ▸ 07/00 | 164007A490 | **734216** | 350 695 | ALB |
| 2.0 i 16V SXA10R ; SXA11R SXA10L ; SXA11L | E | 1998 | 3S-FE,3S-FEC | A | | | 04/94 ▸ 09/97 | 164007A122 | **734466** | 350 698 | ALB |
| 2.0 i 16V SXA11L ; SXA10L SXA11R ; SXA10R | E | 1998 | 3S-FE,3S-FEC | A | | | 04/94 ▸ | 164007A121 | **734466** | 350 698 | ALB |
| 2.0 i 16V SXA10R | E | 1998 | 3S-FEC | A | | | 09/97 ▸ 07/00 | 164007A490 | **734216** | 350 695 | ALB |
| 2.0 i 16V SXA11R ; SXA11L SXA10L ; SXA10R | E | 1998 | 3S-FE,3S-FEC | A | | | 09/97 ▸ 07/00 | 164007A500 | **734217** | 350 695 | CBS |
| **RAV4 (2000>)** | | | | | | | | | | |
| 1.8 i 16V ZCA25R ; ZCA26L ZCA25L ; ZCA26R | E | 1794 | 1ZZ-FE | M | | | 05/00 ▸ 11/05 | 1640022121 | **734182** | 375 738 | ALB |
| 2.0 VVT-i 16V,2.0 i 16V ACA21R ; ACA20R ACA21L ; ACA20L | E | 1998 | 1AZ-FE | M | | | 05/00 ▸ 11/05 | 1640028230 | **734194** | 450 738 | ALB |
| 2.0 VVT-i 16V,2.0 i 16V ACA20R ; ACA21R ACA21L ; ACA20L | E | 1998 | 1AZ-FE | M | | | 05/00 ▸ 11/05 | 1640028130 | **734182** | 375 738 | ALB |
| 2.0 i 16V ACA21L ; ACA21R ACA20R ; ACA20L | E | 1998 | 1AZ-FE | A | | | 05/00 ▸ 11/05 | 1640028190 | **734493** | 375 738 | ALB |
| 2.0 VVT-i 16V,2.0 i 16V ACA21R ; ACA20L ACA20R ; ACA21L | E | 1998 | 1AZ-FE | A | | | 05/00 ▸ 11/05 | 1640028140 | **734183** | 375 738 | ALB |
| 2.0 D-4D 16V CLA20L ; CLA21L CLA21R ; CLA20R | D | 1995 | 1CDFTV-DCRL | M | | | 05/01 ▸ 11/05 | 1640027060 | **734397** | 375 738 | ALB |
| **RAV 4 (2006>)** | | | | | | | | | | |
| 2.0 VVTi 158 16V ZSA35R ; ZSA35L ZSA30R ; ZSA30L | E | 1987 | 3ZR-FAE-HTWVM | M | | | 12/08 ▸ 02/10 | 1640028560 | **735215** | 673 415 | ALB |
| 2.0 VVTi 158 16V ZSA30L ; ZSA30R | E | 1987 | 3ZR-FAE-HTWVM | A | | | 12/08 ▸ 02/10 | 1640028560 | **735215** | 673 415 | ALB |
| 2.0 VVTi 16V ACA30R ; ACA30L | E | 1998 | 1AZ-FE | M | | | 11/05 ▸ 12/08 | 1640028560 | **735215** | 673 415 | ALB |
| 2.0 VVTi 16V ACA30R ; ACA30L | E | 1998 | 1AZ-FE | A | | | 11/05 ▸ 12/08 | 1640028560 | **735215** | 673 415 | ALB |
| 2.2 D-4D 150 16V ALA30L ; ALA30R 2.2 D-4D 16V | D | 2231 | 2AD-FTV,2ADFHV-DCRL 2ADFTV-DCRE/F | M | | | 11/05 ▸ 12/08 | 1640026390 | **735216** | 670 402 | ALB |
| **STARLET (KP6) (78>84)** | | | | | | | | | | |
| 1.0 KP60LP ; KP60RV ; KP60RP ; KP60LV | E | 993 | 2K | M | | | 02/78 ▸ 05/80 | 1640012010 | | 325 350 | CBS |
| 1.0 KP60RP ; KP60LV ; KP60LP ; KP60RV | E | 993 | 2K | M | | | 02/78 ▸ 10/84 | 1640012020 | | 325 350 | CBS |
| 1.2 KP62LV ; KP62RP ; KP62LP ; KP62RV | E | 1166 | 3K-C,3K-H | M | | | 07/78 ▸ 05/80 | 1640012010 | | 325 350 | CBS |
| 1.2 KP62LP ; KP62LV ; KP62RP ; KP62RV | E | 1166 | 3K-C,3K-H | M | | | 05/80 ▸ 10/84 | 1640012020 | | 325 350 | CBS |
| 1.3 KP61LP ; KP61RP ; KP61LV | E | 1290 | 4K,4K-C | M | | | 08/81 ▸ 10/84 | 1640013200 | | 325 350 | CBS |
| **STARLET (EP7) (84>89)** | | | | | | | | | | |
| 1.0 EP70RP ; EP70LP | E | 999 | 1E-L | M | | | 10/84 ▸ 12/89 | 1640010031 | **731124** | 327 448 | CBS |
| 1.0 EP70LP ; EP70RP | E | 999 | 1E-L | M | | READ+ | 10/84 ▸ 12/89 | 1640010011 | **731124** | 327 448 | CBS |

Radiator Motorkühler Radiatore di raffreddamento Radiateur Radyatör Radiator Radiador Радиатор vízhűtő Vodní chladič Radiator Ψυγείο



• **New** Nouveau **Nuevo** Novo **Nuovo** Nieuw **Neu** Nowość **Yeni** Новый Νέο **Nový**

# TOYOTA (.../...)

| | | | CC | | | AC | | | OE | Valeo | DIM. | | TECH |
|---|---|---|---|---|---|---|---|---|---|---|---|---|---|
| **STARLET (EP7) (84>89) (.../...)** | | | | | | | | | | | | | |
| 1.3 | EP71LP ; EP71RP | E | 1296 | 2E-L,2E-LC | M | | | 10/84 ▸ 12/89 | 1640011070 | | 327 | 448 | CBS |
| 1.3 | EP71RP ; EP71LP | E | 1296 | 2E-L,2E-LC | M | | READ+ | 10/84 ▸ 12/89 | 1640010011 | **731124** | 327 | 448 | CBS |
| 1.3 | EP71LP | E | 1296 | 2E-L | A | | | 10/84 ▸ 12/89 | 1640011070 | | 327 | 448 | CBS |
| 1.3 | EP71LP | E | 1296 | 2E-L | A | | READ+ | 10/84 ▸ 12/89 | 1640010011 | **731124** | 327 | 448 | CBS |
| 1.5 D | NP70RP ; NP70LP | D | 1453 | 1N | M | | | 12/86 ▸ 12/89 | 1640055030 | **731122** | 327 | 488 | CBS |
| **STARLET (EP/NP8) (89>95)** | | | | | | | | | | | | | |
| 1.0 | EP80LA ; EP80RA | E | 999 | 1E | M | + | TSW | 12/89 ▸ 12/92 | 1640011350 | **732543** | 325 | 565 | CBS |
| 1.0 | EP80LA ; EP80RA | E | 999 | 1E | M | | | 12/89 ▸ 12/92 | 1640011300 | | | | |
| 1.3,1.3 i | EP81LA ; EP81RA | E | 1296 | 2E,2E-E | M | + | TSW | 12/89 ▸ 12/95 | 1640011350 | **732543** | 325 | 565 | CBS |
| 1.3 i | EP81LA | E | 1296 | 2E-E | M | | TSW | 12/89 ▸ 12/95 | 1640011320 | •**731714** | 325 | 642 | ALB |
| 1.3,1.3 i | EP81LA | E | 1296 | 2E,2E-E | A | + | TSW | 12/89 ▸ 12/95 | 1640011340 | **731713** | 325 | 638 | ALB |
| 1.3 | EP81LA | E | 1296 | 2E | A | | TSW | 12/89 ▸ 12/95 | 1640011310 | **731713** | 325 | 638 | ALB |
| 1.5 D | NP80LA | D | 1453 | 1N | M | | | 12/89 ▸ 12/95 | 1640055070 | | 325 | 642 | CBS |
| **STARLET (EP91) (96>)** | | | | | | | | | | | | | |
| 1.3 i 16V | EP91RA ; EP91LA | E | 1332 | 4E-FE | M | | TSW | 01/96 ▸ 12/97 | 1640011350 | **732543** | 325 | 565 | CBS |
| 1.3 i 16V | EP91LA ; EP91RA | E | 1332 | 4E-FE | M | | TSW | 12/97 ▸ 07/99 | 1640011850 | **732543** | 325 | 565 | CBS |
| 1.3 i 16V | EP91LA ; EP91RA | E | 1332 | 4E-FE | A | | | 01/96 ▸ 12/97 | 1640011681 | **731688** | 325 | 638 | CBS |
| 1.3 i 16V | EP91LA ; EP91RA | E | 1332 | 4E-FE | A | | | 01/96 ▸ 07/99 | 164001B020 | **731688** | 325 | 638 | CBS |
| **SUPRA (MA70) (86>93)** | | | | | | | | | | | | | |
| 3.0 | MA70LB | E | 2954 | 7M-GE | M | | | 01/86 ▸ 08/88 | 1640042100 | **731716** | 377 | 648 | CBS |
| 3.0,3.0 Turbo | MA70LB ; MA70RB | E | 2954 | 7M-GE,7M-GTE | M | | | 01/86 ▸ 04/93 | 1640042130 | **731716** | 377 | 648 | CBS |
| 3.0 Turbo | MA70LB ; MA70RB | E | 2954 | 7M-GTE,7M-GTEK | M | | | 08/88 ▸ 04/93 | 1640042141 | **731715** | 377 | 648 | CBS |
| 3.0 Turbo | MA70LB ; MA70RB | E | 2954 | 7M-GTE | A | | | 01/86 ▸ 04/93 | 1640042141 | **731715** | 377 | 648 | CBS |
| 3.0 | MA70RB ; MA70LB | E | 2954 | 7M-GE,7M-GEK | A | | | 01/86 ▸ 01/87 | 1640042120 | **731717** | 377 | 648 | CBS |
| 3.0 | MA70RB ; MA70LB | E | 2954 | 7M-GE,7M-GEK | A | | | 01/87 ▸ 04/93 | 1640042121 | **731717** | 377 | 648 | CBS |
| **SUPRA (JZA80) (93>)** | | | | | | | | | | | | | |
| 3.0 i,3.0 i Turbo | JZA80L ; JZA80R | E | 2997 | 2JZ-GE,2JZ-GTE | M | | | 05/93 ▸ 05/96 | 1640046320 | **734175** | 400 | 738 | ALB |
| 3.0 i,3.0 i Turbo | JZA80R ; JZA80L | E | 2997 | 2JZ-GE,2JZ-GTE | M | | | 05/93 ▸ 05/96 | 1640046310 | **734174** | 400 | 738 | ALB |
| 3.0 i | JZA80R ; JZA80L | E | 2997 | 2JZ-GE | M | | | 05/93 ▸ 05/96 | 1640046290 | **734173** | 400 | 762 | ALB |
| 3.0 i,3.0 i Turbo | JZA80R ; JZA80L | E | 2997 | 2JZ-GE,2JZ-GTE | A | | | 05/93 ▸ 05/96 | 1640046320 | **734175** | 400 | 738 | ALB |
| **TERCEL (AL2)** | | | | | | | | | | | | | |
| 1.3 | AL20LZ ; AL20RZ | E | 1296 | 2A | M | | | 05/82 ▸ 08/84 | 1640015140 | | 352 | 488 | CBS |
| 1.5 | AL21LZ ; AL25LG ; AL25RG | E | 1453 | 3A,3A-C | M | | | 08/82 ▸ 01/88 | 1640015140 | | 352 | 488 | CBS |
| 1.5 | AL25LG ; AL25RG | E | 1453 | 3A,3A-C | M | | | 08/82 ▸ 01/88 | 1640015120 | | 352 | 488 | CBS |
| **TERCEL (EL5)** | | | | | | | | | | | | | |
| 1.5 i 16V | EL53LA | E | 1496 | 5E-FE | A | | TSW 820338 | 09/94 ▸ 1995 | 1640011830 | **734176** | 325 | 638 | ALB |
| **YARIS (99>2005)** | | | | | | | | | | | | | |
| 1.0 i 16V | SCP10L ; SCP10R | E | 998 | 1SZ-FE | M | | | 01/99 ▸ 01/01 | 1640023100 | **732421** | 350 | 470 | ALM |
| 1.0 i 16V | SCP10R ; SCP10L | E | 998 | 1SZ-FE | M | | | 01/99 ▸ 12/02 | 1640023080 | **732421** | 350 | 470 | ALM |
| 1.3 i 16V | NCP10R ; NCP10L | E | 1299 | 2NZ-FE | M | | TSW | 06/99 ▸ 12/02 | 1640021060 | **734840** | 350 | 488 | ALB |
| 1.3 i 16V | NCP10R ; NCP10L | E | 1299 | 2NZ-FE | A | | TSW | 06/99 ▸ 12/02 | 1640021070 | **734841** | 350 | 488 | ALB |
| 1.5 VVTi 16V | NCP13L ; NCP13R | E | 1497 | 1NZ-FE | M | | TSW | 01/01 ▸ 08/05 | 1640021080 | **734840** | 350 | 488 | ALB |
| 1.4 D-4D | NLP10L ; NLP10R | D | 1364 | 1NDTV | M | | TSW | 10/01 ▸ 12/02 | 1640033070 | **734842** | 350 | 641 | ALB |
| 1.4 D-4D | NLP10L ; NLP10R | D | 1364 | 1NDTV | M | | | 12/02 ▸ 08/05 | 1640033080 | **734916** | 350 | 638 | ALB |
| **YARIS (2001>2005)** | | | | | | | | | | | | | |
| 1.0 i 16V | SCP10R ; SCP10L | E | 998 | 1SZ-FE | M | | | 01/01 ▸ 11/05 | 164000J010 | **732421** | 350 | 470 | ALM |
| 1.3 VVTi 16V | SCP12L ; SCP12R | E | 1298 | 2SZ-FE | M | | | 05/02 ▸ 11/05 | 164000J010 | **732421** | 350 | 470 | ALM |
| 1.4 D-4D | NLP10L ; NLP10R | D | 1364 | 1NDTV | M | | | 02/03 ▸ 11/05 | 164000N011 | **734916** | 350 | 638 | ALB |
| **YARIS (KSP) JPP (2005>)** | | | | | | | | | | | | | |
| 1.0 VVTi | KSP90R ; KSP90L | E | 998 | 1KR-FE | M | | | 08/05 ▸ | 164000Q040 | •**735445** | 350 | 479 | ALB |
| **YARIS (KS/NL/SCP90) (2005>)** | | | | | | | | | | | | | |
| 1.0 VVTi | KSP90R ; KSP90L | E | 998 | 1KR-FE | M | | | 11/05 ▸ | 164000Q040 | •**735445** | 350 | 479 | ALB |
| 1.3 VVTi 16V | SCP90R ; SCP90L | E | 1298 | 2SZ-FE | M | | | 11/05 ▸ 11/08 | 164000Q040 | •**735445** | 350 | 479 | ALB |
| 1.4 D4-D | NLP90L ; NLP90R | D | 1364 | 1NDTV | M | | | 01/06 ▸ 11/08 | 164000N050 | | | | |
| 1.4 D4-D | NLP90R ; NLP90L | D | 1364 | 1NDTV | M | | | 01/06 ▸ 11/08 | 1640033080 | **734916** | 350 | 638 | ALB |
| **YARIS VERSO** | | | | | | | | | | | | | |
| 1.3 i 16V | NCP20L ; NCP22L<br>NCP20R ; NCP22R | E | 1299 | 2NZ-FE | M | | TSW | 08/99 ▸ 09/05 | 1640021080 | **734840** | 350 | 488 | ALB |
| 1.3 i 16V | NCP20R ; NCP20L | E | 1299 | 2NZ-FE | A | | TSW | 08/99 ▸ 09/05 | 1640021070 | **734841** | 350 | 488 | ALB |

| Type Ctr. | | CC | | AC | | 2+3 | OE | Valeo | DIM. | TECH |
|---|---|---|---|---|---|---|---|---|---|---|
| **TOYOTA (.../...)** | | | | | | | | | | |
| **YARIS VERSO (.../...)** | | | | | | | | | | |
| 1.5 VVT-i 16V NCP21R ; NCP21L | E | 1497 | 1NZ-FE | M | | TSW | 03/00 ▸ 09/05 | 1640021080 | **734840** | 350 488 | ALB |
| 1.4 D-4D NLP20L ; NLP20R NLP22R ; NLP22L | D | 1364 | 1NDTV | M | | TSW | 10/01 ▸ 09/05 | 1640033070 | **734842** | 350 641 | ALB |
| **TOYOTA** | | | | | | | | | | |
| **HIACE** | | | | | | | | | | |
| 2.4 i 16V RCH12LRBMREW | E | 2438 | 2RZ-E | M | +/- | | 08/95 ▸ 07/99 | 164005B320 | •**735593** | 525 628 | ALB |
| 2.4 D LXH12LRFMDSW | D | 2446 | 2L | M | +/- | | 08/95 ▸ 04/98 | 164005B320 | •**735593** | 525 628 | ALB |
| 2.5 D | D | 2494 | 2KD-FTV | A | | | 11/01 ▸ | 1640030170 | •**735565** | 660 510 | ALB |
| **HILUX** | | | | | | | | | | |
| 2.5 D | D | 2494 | 2KD-FTV | M | +/- | | 08/05 ▸ | 164000L250 | •**735442** | 525 655 | ALB |
| 3.0 D | D | 2982 | 1KD-FTV | M | +/- | | 12/07 ▸ | 164000L250 | •**735442** | 525 655 | ALB |
| **VAUXHALL** | | | | | | | | | | |
| **AGILA (2000>2007)** | | | | | | | | | | |
| 1.0 i 12V | E | 973 | Z10XE | M | +/- | | 06/00 ▸ 08/03 | 9208632 | **732694** | 375 377,5 | ALB |
| 1.0 i 12V 2G00001 ▸ 4G999999 | E | 973 | Z10XE | M | +/- | | 01/02 ▸ 08/03 | 9210556 | **734330** | 375 377,5 | ALB |
| 1.0 i Twinport 12V 5G00001 ▸ | E | 998 | Z10XEP | M | +/- | | 2005 ▸ 12/07 | 13182786 | **734331** | 375 377,5 | ALB |
| 1.0 i Twinport 12V ▸ 4G999999 | E | 998 | Z10XEP | M | +/- | | 08/03 ▸ 2004 | 9210556 | **734330** | 375 377,5 | ALB |
| 1.2 i 16V | E | 1199 | Z12XE | M | +/- | | 07/00 ▸ 08/04 | 9208632 | **732694** | 375 377,5 | ALB |
| 1.2 i 16V 2G00001 ▸ 4G999999 | E | 1199 | Z12XE | M | +/- | | 01/02 ▸ 2004 | 9210556 | **734330** | 375 377,5 | ALB |
| 1.2 i Twinport 16V 5G00001 ▸ | E | 1229 | Z12XEP | M | +/- | | 2005 ▸ 12/07 | 13182786 | **734331** | 375 377,5 | ALB |
| 1.2 i Twinport 16V | E | 1229 | Z12XEP | M | +/- | | 09/04 ▸ 2004 | 9210556 | **734330** | 375 377,5 | ALB |
| **ASTRA I (80>84)** | | | | | | | | | | |
| 1.2 43 ; 44 ; 33 | E | 1196 | 12S | M | | | 01/82 ▸ 10/84 | 90144059 | | 420 285 | ALM |
| 1.3 43 ; 44 ; 45 ; 35 | E | 1297 | 13S | M | - | TSW | 02/80 ▸ 10/84 | 90128036 | **883751** | 530 285 | ALM |
| 1.3 44 ; 45 ; 43 | E | 1297 | 13S | A | - | TSW | 02/80 ▸ 10/84 | 90128036 | **883751** | 530 285 | ALM |
| 1.3 43 ; 44 ; 45 ; 35 ▸ 2562786 | E | 1297 | 13S | M | - | TSW | 02/80 ▸ | 03049245 | **883751** | 530 285 | ALM |
| 1.6 OTD08 ; OTD35 ; OTD48 ; OTC0/8 | E | 1598 | 16S,16SH | M | - | | 12/81 ▸ 10/84 | 03048797 | | 530 414 | ALM |
| 1.6 OTD35 ; OTD48 ; OTC0/8 | E | 1598 | 16S,16SH | A | - | | 12/81 ▸ 10/84 | 90128775 | | 530 414 | ALM |
| 1.6 OTD35 ; OTD48 ; OTC0/8 | E | 1598 | 16S,16SH | A | | | 12/81 ▸ 10/84 | 03048797 | | 530 414 | ALM |
| 1.8 i | E | 1796 | 18E | M | - | | 04/83 ▸ 10/84 | 90128774 | | 530 414 | ALM |
| 1.8 i | E | 1796 | 18E | M | | | 04/83 ▸ 10/84 | 03048797 | | 530 414 | ALM |
| 1.6 D GTD35 ; GTD48 ; GTD0/8 | D | 1598 | 16D | M | - | | 09/82 ▸ 10/84 | 03048799 | | 530 414 | ALM |
| **ASTRA II (84>91)** | | | | | | | | | | |
| 1.2 | E | 1196 | 12ST | M | - | TSW | 10/84 ▸ 09/91 | 90180560 | **883857** | 530 285 | ALM |
| 1.2 | E | 1196 | 12ST | M | | TSW | 10/84 ▸ 06/90 | 90444154 | **883857** | 530 285 | ALM |
| 1.3 | E | 1297 | 13S | M | - | TSW | 10/84 ▸ 10/89 | 90444154 | **883857** | 530 285 | ALM |
| 1.4 i TC15J ; TC35J ; TC08/J/X ; TD08J ; TD35J TD48J ; TC48/J/X | E | 1389 | C14NZ | M | - | TSW | 10/89 ▸ 09/91 | 90351829 | **883880** | 525 322 | ALM |
| 1.4 i TC15J ; TC35J ; TC08/J/X ; TD08J ; TD35J TD48J ; TC48/J/X | E | 1389 | C14NZ | M | - | TSW | 10/89 ▸ 09/91 | 90444154 | **883857** | 530 285 | ALM |
| 1.6 i TC48B ; TD08R ; TD35B ; TD48B ; TC08/B | E | 1598 | 16SV,C16NZ | M | - | TSW | 08/86 ▸ 09/91 | 90352138 | **883881** | 525 322 | ALM |
| 1.6 | E | 1598 | 16SV | M | | TSW | 10/84 ▸ 08/86 | 90352138 | **883881** | 525 322 | ALM |
| 1.6 i TC48B ; TD35B ; TD48B ; TC08/B LB524411, L2538337 ▸ | E | 1598 | C16NZ | A | - | TSW | 1990 ▸ 09/91 | 90352138 | **883881** | 525 322 | ALM |
| 2.0 i | E | 1998 | 20SEH | M | - | TSW | 03/87 ▸ 09/91 | 90442550 | **730125** | 635 322 | ALM |
| 2.0 i TD08H | E | 1998 | C20NE | M | - | | 03/87 ▸ 09/91 | 03054013 | | 630 316 | CBS |
| 2.0 i 16V TD08W | E | 1998 | C20XE | M | - | TSW | 05/88 ▸ 09/91 | 90442621 | **731217** | 520 370 | CBS |
| 2.0 i TD08H | E | 1998 | C20NE | M | | TSW | 03/87 ▸ 09/91 | 90442550 | **730125** | 635 322 | ALM |
| 1.6 D | D | 1598 | 16D | M | - | TSW | 10/84 ▸ 01/89 | 90442550 | **730125** | 635 322 | ALM |
| 1.7 D TD35L ; TD48L | D | 1699 | 17D | M | - | TSW | 01/89 ▸ 09/91 | 90442621 | **731217** | 520 370 | CBS |
| **ASTRA III (91>98)** | | | | | | | | | | |
| 1.4,1.4 i,1.4 i 16V | E | 1389 | 14NV,C14NV,C14NZ,C14SE,X14NZ X14XE | M | + | TSW | 09/91 ▸ 03/01 | 52459347 | **730993** | 540 377,5 | ALM |

Radiator Radiateur Motorkühler Radiatore di raffreddamento Radiator Radyatör Радиатор Radiador Vízhűtő Vodní chladič Radiator Ψυγείο



• **New** Nouveau **Nuevo** Novo **Nuovo** Nieuw **Neu** Nowość **Yeni** Новый Νέο **Nový**

# VAUXHALL (.../...)

## ASTRA III (91>98) (.../...)

| | | CC | | AC | | | | OE | Valeo | DIM. | TECH |
|---|---|---|---|---|---|---|---|---|---|---|---|
| 1.4,1.4 i<br>P8212507, P2768892 ▸ | E | 1389 | 14NV,C14NV,C14NZ,C14SE,X14NZ | M | - | | 09/91 ▸ 03/98 | 90467723 | | 525 322 | ALM |
| 1.4,1.4 i<br>P8212507, P2768892 ▸ | E | 1389 | 14NV,C14NV,C14NZ,C14SE,X14NZ | M | - | TSW | 09/91 ▸ 03/98 | 90467723 | 730975 | 525 322 | ALM |
| 1.4 i<br>NE127463, N5030826 ▸ | E | 1389 | 14NV,C14NZ,C14SE | M | - | | 10/91 ▸ | 90412252 | | 525 322 | ALM |
| 1.4 i<br>NA003553, NE127463 ▸ | E | 1389 | 14NV,C14NZ,C14SE | M | - | TSW | 10/91 ▸ | 90412252 | 730975 | 525 322 | ALM |
| 1.4 i 16V | E | 1389 | X14XE | M | - | TSW | 09/94 ▸ 03/01 | 90443392 | 730994 | 540 377,5 | ALM |
| 1.4,1.4 i | E | 1389 | C14NV,C14SE | M | | TSW | 09/91 ▸ 02/92 | 90325151 | 730975 | 525 322 | ALM |
| 1.4,1.4 i | E | 1389 | C14NV,C14SE | M | | | 09/91 ▸ 02/92 | 90411883 | | 525 310 | |
| 1.4 | E | 1389 | C14NV | M | | TSW | 03/92 ▸ 03/98 | 90412252 | 730975 | 525 322 | ALM |
| 1.4 | E | 1389 | C14NV | M | | | 03/92 ▸ 03/98 | 90412252 | | 525 322 | ALM |
| 1.6 i,1.6 i 16V | E | 1598 | C16NZ,C16SE,X16SZ,X16SZR<br>X16XEL | M | + | TSW | 09/91 ▸ 03/01 | 52459347 | 730993 | 540 377,5 | ALM |
| 1.6 i<br>N2587473, NE127463 ▸ | E | 1598 | C16NZ,C16SE,X16SZ,X16SZR | M | - | | 09/91 ▸ 03/01 | 90412252 | | 525 322 | ALM |
| 1.6 i<br>N2587473, NE127463 ▸ | E | 1598 | C16NZ,C16SE,X16SZ,X16SZR | M | - | TSW | 09/91 ▸ 03/01 | 90412252 | 730975 | 525 322 | ALM |
| 1.6 i,1.6 i 16V | E | 1598 | 16LZ2,X16XEL | M | - | TSW | 10/91 ▸ 03/98 | 90443392 | 730994 | 540 377,5 | ALM |
| 1.6 i,1.6 i 16V | E | 1598 | 16LZ2,X16XEL | M | - | TSW | 10/91 ▸ 03/98 | 52459347 | 730993 | 540 377,5 | ALM |
| 1.6 i<br>NA000001, N5000001 ▸ NA003552, N5030825 | E | 1598 | C16NZ,C16SE,X16SZ | M | - | | 09/91 ▸ 03/98 | 90411883 | | 525 310 | |
| 1.8 i | E | 1796 | C18NZ | M | + | TSW | 10/91 ▸ 07/94 | 52459347 | 730993 | 540 377,5 | ALM |
| 1.8 i 16V | E | 1799 | C18XE,C18XEL,X18XE | M | + | TSW | 06/93 ▸ 03/01 | 52459347 | 730993 | 540 377,5 | ALM |
| 1.8 i 16V | E | 1799 | X18XE | M | - | TSW | 01/96 ▸ 03/01 | 90443392 | 730994 | 540 377,5 | ALM |
| 2.0 i,2.0 i 16V | E | 1998 | C20NE,C20XE,X20XEV | M | +/- | TSW | 09/91 ▸ 03/98 | 90443392 | 730994 | 540 377,5 | ALM |
| 2.0 i,2.0 i 16V | E | 1998 | C20NE,C20XE,X20XEV | M | +/- | TSW | 09/91 ▸ 03/98 | 52459347 | 730993 | 540 377,5 | ALM |
| 2.0 i,2.0 i 16V | E | 1998 | C20NE,C20XE,X20XEV | M | + | TSW | 09/91 ▸ 03/98 | 90443392 | 730994 | 540 377,5 | ALM |
| 2.0 i,2.0 i 16V | E | 1998 | C20NE,C20XE,X20XEV | M | + | TSW | 09/91 ▸ 03/98 | 52459347 | 730993 | 540 377,5 | ALM |
| 2.0 i | E | 1998 | C20NE | M | - | TSW | 09/91 ▸ 10/94 | 90443392 | 730994 | 540 377,5 | ALM |
| 1.7 TD Turbo | D | 1686 | 17TD | M | +/- | TSW 820037 | 09/96 ▸ 03/98 | 90541496 | 734242 | 530 346 | ALB |
| 1.7 TD Turbo | D | 1686 | 17TD | M | + | TSW | 09/91 ▸ 03/98 | 52459347 | 730993 | 540 377,5 | ALM |
| 1.7 TD Turbo | D | 1686 | 17TD | M | - | TSW 820037 | 09/91 ▸ 03/98 | 90353025 | 731022 | 540 377,5 | ALM |
| 1.7 TD Turbo | D | 1699 | X17DTL | M | +/- | TSW | 08/94 ▸ 03/98 | 90510645 | 731421 | 502 348 | ALB |
| 1.7 D | D | 1699 | 17D | M | + | TSW | 09/91 ▸ 03/98 | 52459347 | 730993 | 540 377,5 | ALM |
| 1.7 D | D | 1699 | 17D,17DR | M | - | TSW | 09/91 ▸ 03/98 | 52455043 | 730993 | 540 377,5 | ALM |
| 1.7 TD Turbo | D | 1699 | X17DTL | M | | TSW | 08/94 ▸ 03/98 | 90510645 | 731421 | 502 348 | ALB |

## ASTRA IV (98>)

| | | | | | | | | | | | |
|---|---|---|---|---|---|---|---|---|---|---|---|
| 1.6 i GNV 16V | G | 1598 | Z16YNG | M | + | | 03/03 ▸ 12/05 | 93177121 | 732549 | 610 377,5 | ALM |
| 1.6 i GNV 16V | G | 1598 | Z16YNG | M | - | | 03/03 ▸ 12/05 | 9202493 | 732795 | 540 377,5 | ALM |
| 1.8 i LPG 16V | G | 1796 | Z18LPG | M | + | | 07/02 ▸ 12/05 | 93177121 | 732549 | 610 377,5 | ALM |
| 1.8 i LPG 16V | G | 1796 | Z18LPG | M | | | 07/02 ▸ 12/05 | 9202493 | 732795 | 540 377,5 | ALM |
| 1.2 i 16V | E | 1199 | X12XE,Z12XE | M | - | | 04/98 ▸ 02/04 | 9202491 | 732723 | 540 377,5 | ALM |
| 1.2 i 16V | E | 1199 | X12XE,Z12XE | M | | | 04/98 ▸ 02/04 | 9202491 | 732723 | 540 377,5 | ALM |
| 1.2 i 16V<br>Y5291301, Y6129877 ▸ 3H022718, 32228196 | E | 1199 | X12XE,Z12XE | M | + | | 04/98 ▸ | 9193264 | 732551 | 610 377,5 | ALM |
| 1.2 i 16V<br>▸ Y5291300, Y8144150 | E | 1199 | X12XE | M | - | | 04/98 ▸ 2000 | 90570723 | 732723 | 540 377,5 | ALM |
| 1.4 i 16V | E | 1389 | X14XE | M | + | | 02/98 ▸ 02/04 | | 732795 | 540 377,5 | ALM |
| 1.4 i 16V | E | 1389 | X14XE | M | + | | 02/98 ▸ 02/04 | 93177121 | 732549 | 610 377,5 | ALM |
| 1.4 i 16V | E | 1389 | X14XE | M | - | | 02/98 ▸ 02/04 | 90570725 | 732724 | 540 377,5 | ALM |
| 1.4 i 16V | E | 1389 | X14XE | M | | | 02/98 ▸ 02/04 | 9202493 | 732795 | 540 377,5 | ALM |
| 1.4 i 16V<br>▸ Y2279349, Y6129876 | E | 1389 | X14XE | M | + | | 04/98 ▸ | 9193265 | 732729 | 610 377,5 | ALM |
| 1.4 i 16V<br>▸ Y8144150, Y5291300 | E | 1389 | X14XE | M | + | | 04/98 ▸ 2000 | 9119482 | 732549 | 610 377,5 | ALM |
| 1.4 i 16V<br>▸ Y8144150, Y6132349 | E | 1389 | X14XE | M | - | | 04/98 ▸ 2000 | 90570726 | 732724 | 540 377,5 | ALM |
| 1.6 i,1.6 i 16V | E | 1598 | X16SZR,X16XEL | M | + | | 04/98 ▸ 02/04 | | 732795 | 540 377,5 | ALM |
| 1.6 i,1.6 i 16V | E | 1598 | X16SZR,X16XEL,Z16SE/E2 | M | + | | 04/98 ▸ 12/05 | 93177121 | 732549 | 610 377,5 | ALM |
| 1.6 i,1.6 i 16V,1.6 i Twinport 16V | E | 1598 | X16SZR,X16XEL,Z16XEP | M | - | | 04/98 ▸ 12/05 | 90570725 | 732724 | 540 377,5 | ALM |
| 1.6 i,1.6 i 16V | E | 1598 | X16SZR,X16XEL,Z16SE/E2 | M | | | 04/98 ▸ 12/05 | 9202493 | 732795 | 540 377,5 | ALM |
| 1.6 i,1.6 i 16V<br>▸ Y2279349, Y8144150 | E | 1598 | X16SZR,X16XEL | M | + | | 04/98 ▸ | 9193265 | 732729 | 610 377,5 | ALM |
| 1.6 i,1.6 i 16V<br>▸ Y5291300, Y6132349 | E | 1598 | X16SZR,X16XEL | M | - | | 04/98 ▸ | 90570726 | 732724 | 540 377,5 | ALM |

# VAUXHALL (.../...)

## ASTRA IV (98>) (.../...)

| Type Ctr. | CC | | AC | | 2+3 | OE | Valeo | DIM. | TECH |
|---|---|---|---|---|---|---|---|---|---|
| 1.6 i,1.6 i 16V ▸ Y8144150, Y6129876 | E | 1598 | X16SZR,X16XEL | M | + | | 04/98 ▸ 2000 | 9119482 | 732549 | 610 377,5 | ALM |
| 1.8 i 16V | E | 1796 | X18XE1,Z18XE | M | + | | 04/98 ▸ 12/05 | 93177121 | 732549 | 610 377,5 | ALM |
| 1.8 i 16V | E | 1796 | X18XE1 | M | + | | 04/98 ▸ 09/00 | | 732795 | 540 377,5 | ALM |
| 1.8 i 16V | E | 1796 | X18XE1 | M | - | | 04/98 ▸ 08/00 | 9202493 | 732795 | 540 377,5 | ALM |
| 1.8 i 16V | E | 1796 | X18XE1,Z18XE | M | - | | 04/98 ▸ 02/05 | 90570725 | 732724 | 540 377,5 | ALM |
| 1.8 i 16V | E | 1796 | X18XE1,Z18XE | M | | | 04/98 ▸ 12/05 | 9202493 | 732795 | 540 377,5 | ALM |
| 1.8 i 16V ▸ Y2279349, Y8144150 | E | 1796 | X18XE1 | M | + | | 04/98 ▸ | 9193265 | 732729 | 610 377,5 | ALM |
| 1.8 i 16V ▸ Y5291300, Y8144150 | E | 1796 | X18XE1 | M | + | | 04/98 ▸ 2000 | 9119482 | 732549 | 610 377,5 | ALM |
| 1.8 i 16V ▸ Y6132349, Y8144150 | E | 1796 | X18XE1 | M | - | | 04/98 ▸ 2000 | 90570726 | 732724 | 540 377,5 | ALM |
| 1.8 i 16V | E | 1799 | X18XE | M | + | | 09/00 ▸ 12/05 | 93177121 | 732549 | 610 377,5 | ALM |
| 1.8 i 16V | E | 1799 | X18XE | M | - | | 09/00 ▸ 12/05 | 90570725 | 732724 | 540 377,5 | ALM |
| 1.8 i 16V | E | 1799 | X18XE | M | | | 09/00 ▸ 12/05 | 9202493 | 732795 | 540 377,5 | ALM |
| 2.0 i 16V | E | 1998 | X20XEV | M | +/- | | 04/98 ▸ 02/05 | 9201018 | 732548 | 610 377,5 | ALM |
| 2.0 i 16V | E | 1998 | X20XEV | M | +/- | | 04/98 ▸ 02/04 | | 732795 | 540 377,5 | ALM |
| 2.0 SRi Turbo 16V | E | 1998 | Z20LET | M | + | | 04/02 ▸ 02/04 | 9201018 | 732548 | 610 377,5 | ALM |
| 2.0 SRi Turbo 16V,2.0 i 16V | E | 1998 | X20XEV,Z20LET | M | | | 04/98 ▸ 12/05 | 9201018 | 732548 | 610 377,5 | ALM |
| 2.0 i 16V ▸ Y8144150, Y5291300 | E | 1998 | X20XEV | M | +/- | | 04/98 ▸ 2000 | 9119483 | 732548 | 610 377,5 | ALM |
| 2.2 i 16V | E | 2198 | Z22SE | M | + | | 07/00 ▸ 12/05 | 9201018 | 732548 | 610 377,5 | ALM |
| 2.2 i 16V | E | 2198 | Z22SE | M | - | | 07/00 ▸ 12/05 | 93177121 | 732549 | 610 377,5 | ALM |
| 2.2 i 16V | E | 2198 | Z22SE | A | + | | 07/00 ▸ 12/05 | 9201018 | 732548 | 610 377,5 | ALM |
| 1.7 CDTi,1.7 DTi 16V | D | 1686 | Y17DT,Z17DTL | M | +/- | | 01/00 ▸ 12/05 | 9192586 | 734322 | 600 369 | ALB |
| 1.7 CDTi | D | 1686 | Z17DTL | M | +/- | | 04/03 ▸ 12/05 | 9193268 | 732550 | 610 377 | CBS |
| 1.7 CDTi,1.7 DTi 16V | D | 1686 | Y17DT,Z17DTL | M | | | 01/00 ▸ 12/05 | 9192586 | 734322 | 600 369 | ALB |
| 1.7 D Turbo | D | 1699 | X17DTL | M | +/- | | 04/98 ▸ 02/04 | 9193268 | 732550 | 610 377 | CBS |
| 1.7 D Turbo | D | 1699 | X17DTL | M | | | 04/98 ▸ 02/04 | 9193268 | 732550 | 610 377 | CBS |
| 1.7 D Turbo ▸ Y8144150, Y5291300 | D | 1699 | X17DTL | M | +/- | | 04/98 ▸ 2000 | 9119484 | 732550 | 610 377 | CBS |
| 2.0 Di 16V ▸ X2117328 ▸ | D | 1995 | X20DTL,Y20DTL | M | + | | 04/98 ▸ 12/05 | 9192578 | 732550 | 610 377 | CBS |
| 2.0 Di 16V | D | 1995 | X20DTL | M | - | | 04/98 ▸ 12/05 | 9201018 | 732548 | 610 377,5 | ALM |
| 2.0 Di 16V,2.0 TDi 16V | D | 1995 | X20DTL,Y20DTH,Y20DTL | M | | | 04/98 ▸ 12/05 | 9201018 | 732548 | 610 377,5 | ALM |
| 2.0 TDi 16V | D | 1995 | Y20DTH | A | | | 06/02 ▸ 02/04 | 9201018 | 732548 | 610 377,5 | ALM |
| 2.0 Di 16V ▸ X2117327, X5112266 | D | 1995 | X20DTL,Y20DTL | M | + | | 04/98 ▸ 1999 | 9193267 | 732548 | 610 377,5 | ALM |
| 2.0 Di 16V ▸ X5112266, X8046785 | D | 1995 | X20DTL,Y20DTL | M | + | | 04/98 ▸ 1999 | 9119483 | 732548 | 610 377,5 | ALM |
| 2.0 Di 16V Y2302739, Y2276807 ▸ Y5291300, Y2276806 | D | 1995 | X20DTL,Y20DTL | M | - | | 04/98 ▸ | 9193267 | 732548 | 610 377,5 | ALM |
| 2.0 Di 16V | D | 1995 | X20DTL,Y20DTL | M | - | | 04/98 ▸ 2000 | 9119483 | 732548 | 610 377,5 | ALM |

## ASTRA (2004>)

| | | | | | | | | | | | |
|---|---|---|---|---|---|---|---|---|---|---|---|
| 1.4 i GPL 16V | G | 1364 | A14XEL | M | | | 03/05 ▸ | 13145210 | 734381 | 600 370 | |
| 1.4 Twinport 16V,1.4 i Twinport 16V | E | 1364 | Z14XEP | M | | | 03/04 ▸ | 13145210 | 734381 | 600 370 | |
| 1.6 i Twinport 16V | E | 1598 | Z16XEP | M | +/- | | 03/04 ▸ | 13145211 | 734382 | 600 370 | ALB |
| 1.6 i 16V,1.6 i Twinport 16V | E | 1598 | Z16XEP,Z16XER | M | | | 03/05 ▸ | 13145211 | 734382 | 600 370 | ALB |
| 1.6 i Twinport 16V | E | 1598 | Z16XER | A | | | 01/07 ▸ | 13145211 | 734382 | 600 370 | ALB |
| 1.8 i 16V | E | 1796 | Z18XE | M | | | 03/04 ▸ | 13145210 | 734381 | 600 370 | |
| 1.8 i 16V | E | 1796 | Z18XER | M | | | 09/05 ▸ | 13145211 | 734382 | 600 370 | ALB |
| 1.8 i 16V | E | 1796 | Z18XE,Z18XER | A | | | 03/04 ▸ | 13145210 | 734381 | 600 370 | |
| 2.0 T 16V,2.0 i Turbo 16V | E | 1998 | Z20LEL,Z20LER | M | +/- | | 03/04 ▸ | 13145212 | 734432 | 600 370 | ALB |
| 2.0 i Turbo 16V | E | 1998 | Z20LEH | M | | | 03/05 ▸ | 13152320 | 735080 | 600 370 | ALB |
| 2.0 i Turbo 16V | E | 1998 | Z20LEL,Z20LER | M | | | 03/05 ▸ | 13145212 | 734432 | 600 370 | ALB |
| 1.3 CDTI 16V ▸ 65016700 ▸ | D | 1248 | Z13DTH | M | | | > ▸ | 13143570 | 734380 | 600 370 | |
| 1.3 CDTI 16V ▸ 65016699 | D | 1248 | Z13DTH | M | +/- | | 08/05 ▸ | 13152320 | 735080 | 600 370 | ALB |
| 1.7 CDTI,1.7 CDTI 16V | D | 1686 | Z17DTH,Z17DTL | M | +/- | | > ▸ | 13143570 | 734380 | 600 370 | |
| 1.7 CDTI 16V ▸ 52000001, 82000001 ▸ | D | 1686 | A17DTJ/F,Z17DTH,Z17DTJ/F | M | | | > ▸ | 13143570 | 734380 | 600 370 | |
| 1.7 CDTI 16V | D | 1686 | A17DTJ/F,A17DTR/F,Z17DTJ/F,Z17DTR/F | M | | | 02/07 ▸ | 13152320 | 735080 | 600 370 | ALB |
| 1.7 CDTI 16V ▸ 45999999 | D | 1686 | Z17DTH | M | + | | > ▸ | 13143570 | 734380 | 600 370 | |
| 1.7 CDTI,1.7 CDTI 16V ▸ 45999999 | D | 1686 | Z17DTH,Z17DTL | M | - | | 03/04 ▸ | 13143554 | 734383 | 600 370 | |
| 1.9 CDTI,1.9 CDTI 16V | D | 1910 | Z19DT,Z19DTH,Z19DTJ | M | +/- | | 03/04 ▸ | 13152320 | 735080 | 600 370 | ALB |

Radiator Ψυγείο Vodní chladič Radiator Радиатор vízhűtő Radiador Radiator Radyatör Radiator Radiatore di raffreddamento Motorkühler Radiateur Radiator



• **New** Nouveau **Nuevo** Novo **Nuovo** Nieuw **Neu** Nowość **Yeni** Новый Νέο **Nový**

# VAUXHALL (.../...)

## ASTRA (2004>) (.../...)

| | | CC | | AC | | | | OE | Valeo | DIM. | | TECH |
|---|---|---|---|---|---|---|---|---|---|---|---|---|
| 1.9 CDTI,1.9 CDTI 16V | D | 1910 | Z19DT,Z19DTJ | M | | | 03/04 ▸ | 13143570 | **734380** | 600 | 370 | |
| 1.9 CDTi 16V | D | 1910 | Z19DTH | M | | | 09/05 ▸ | 13152320 | **735080** | 600 | 370 | ALB |

## BELMONT

| | | CC | | AC | | | | OE | Valeo | DIM. | | TECH |
|---|---|---|---|---|---|---|---|---|---|---|---|---|
| 1.3 | E | 1297 | 13S | M | - | TSW | 01/86 ▸ 09/89 | 90180560 | **883857** | 530 | 285 | ALM |
| 1.3 | E | 1297 | 13S | M | | TSW | 01/86 ▸ 09/89 | 90444154 | **883857** | 530 | 285 | ALM |
| 1.4 i TC19X | E | 1389 | C14NZ | M | - | TSW | 08/90 ▸ 09/91 | 90351829 | **883880** | 525 | 322 | ALM |
| 1.4 i TC19J ; TD19J | E | 1389 | 14NV | M | | TSW | 10/89 ▸ 06/90 | 90444154 | **883857** | 530 | 285 | ALM |
| 1.4 i TD19J ; TC19/J/X | E | 1389 | 14NV,C14NZ | M | | TSW | 06/90 ▸ 09/91 | 90351829 | **883880** | 525 | 322 | ALM |
| 1.4 i TC19X ▸ L2538337, L5053352 | E | 1389 | C14NZ | M | - | TSW | 08/90 ▸ | 90444154 | **883857** | 530 | 285 | ALM |
| 1.4 i TC19J ; TD19J ▸ L5053352, L2538337 | E | 1389 | 14NV | M | - | TSW | 10/89 ▸ | 90180560 | **883857** | 530 | 285 | ALM |
| 1.6 TC19B ; TD19B L5053352, L2538337 ▸ | E | 1598 | 16SV | M | - | TSW | > ▸ 09/91 | 90325465 | **883881** | 525 | 322 | ALM |
| 1.6 TC19B ; TD19B | E | 1598 | 16SV | M | | TSW | 01/86 ▸ 09/91 | 90352138 | **883881** | 525 | 322 | ALM |
| 1.6 L2538337 ▸ | E | 1598 | 16SV | A | - | TSW | > ▸ 09/91 | 90352138 | **883881** | 525 | 322 | ALM |
| 1.6 TC19B ; TD19B ▸ L2538337, L5053352 | E | 1598 | 16SV | M | - | TSW | 01/86 ▸ | 90180561 | **883858** | 630 | 322 | ALM |
| 1.8 i TC19E ; TC35E | E | 1796 | 18SE | M | - | TSW | 01/86 ▸ 09/91 | 90180561 | **883858** | 630 | 322 | ALM |
| 1.8 i TC19E ; TC35E | E | 1796 | 18SE | M | | TSW | 01/86 ▸ 09/91 | 90444154 | **883857** | 530 | 285 | ALM |
| 1.8 i TC19E | E | 1796 | 18SE | A | | TSW | 01/89 ▸ 09/91 | 90444154 | **883857** | 530 | 285 | ALM |
| 1.6 D J5273427 ▸ | D | 1598 | 16D | M | - | TSW | > ▸ 01/89 | 90442621 | **731217** | 520 | 370 | CBS |
| 1.6 D ▸ J2791967 | D | 1598 | 16D | M | - | TSW | 01/86 ▸ | 90442550 | **730125** | 635 | 322 | ALM |
| 1.7 D TC19L | D | 1699 | 17D | M | - | TSW | 01/89 ▸ 09/91 | 90442621 | **731217** | 520 | 370 | CBS |

## CALIBRA

| | | CC | | AC | | | | OE | Valeo | DIM. | | TECH |
|---|---|---|---|---|---|---|---|---|---|---|---|---|
| 2.0 i,2.0 i 16V JM07//1/D | E | 1998 | C20NE,C20XE,X20XEV | M | + | TSW | 06/90 ▸ 06/97 | 90443463 | **731175** Clipse | 620 | 377,5 | ALM |
| 2.0 i,2.0 i 16V JM07//1/D | E | 1998 | C20NE,C20XE,X20XEV | M | + | | 06/90 ▸ 06/97 | 90443463 | | 620 | 377,5 | ALM |
| 2.0 i,2.0 i 16V JM07/1/D | E | 1998 | C20NE,C20XE | M | + | TSW | 06/90 ▸ 08/96 | 52455192 | **731174** | 620 | 377,5 | ALM |
| 2.0 i,2.0 i 16V JM07//1/D | E | 1998 | C20NE,C20XE,X20XEV | M | - | TSW | 06/90 ▸ 06/97 | 90443466 | **730395** Clipse | 540 | 377,5 | ALM |
| 2.0 i,2.0 i 16V JM07/1/D | E | 1998 | C20NE,C20XE | M | - | TSW | 06/90 ▸ 08/96 | 3096385 | **730396** | 538 | 365 | ALB |
| 2.0 i,2.0 i 16V JM07//D | E | 1998 | C20NE,X20XEV | A | + | | 06/90 ▸ 06/97 | 90443463 | | 620 | 377,5 | ALM |
| 2.0 i JM07D | E | 1998 | C20NE | A | + | TSW | 06/90 ▸ 08/96 | 52455192 | **731174** | 620 | 377,5 | ALM |
| 2.0 i,2.0 i 16V JM07//D | E | 1998 | C20NE,X20XEV | A | + | TSW | 06/90 ▸ 06/97 | 90443463 | **731175** Clipse | 620 | 377,5 | ALM |
| 2.0 i JM07D | E | 1998 | C20NE | A | - | TSW | 06/90 ▸ 08/96 | 3096385 | **730396** | 538 | 365 | ALB |
| 2.0 i,2.0 i 16V JM07//D | E | 1998 | C20NE,X20XEV | A | - | TSW | 06/90 ▸ 06/97 | 90443466 | **730395** Clipse | 540 | 377,5 | ALM |
| 2.5 i V6,2.5 i V6 24V JM07 | E | 2498 | C25XE,X25XE-170 | M | +/- | | 08/93 ▸ 07/97 | 90443911 | **734604** | 617 | 374 | ALB |
| 2.5 i V6,2.5 i V6 24V JM07 | E | 2498 | C25XE,X25XE-170 | M | | | 08/93 ▸ 07/97 | 90443914 | **734604** | 617 | 374 | ALB |
| 2.5 i V6,2.5 i V6 24V JM07 | E | 2498 | C25XE,X25XE-170 | A | +/- | | 08/93 ▸ 07/97 | 90443911 | **734604** | 617 | 374 | ALB |

## CARLTON

| | | CC | | AC | | | | OE | Valeo | DIM. | | TECH |
|---|---|---|---|---|---|---|---|---|---|---|---|---|
| 1.8 i VF35E ; VM19E ; VM35E ; VF19/E | E | 1796 | 18SEH | M | +/- | | 11/86 ▸ 08/92 | 90443377 | | 562 | 475 | CBS |
| 1.8,1.8 i VF19/E/R ; VF35/E/R VM19/E/R ; VM35/E/R | E | 1796 | 18NV,18SEH,18SV,E18NVR | M | | | 11/86 ▸ 03/94 | 90443401 | | 400 | 495 | ALB |
| 1.8,1.8 i VF19/E/R ; VF35/E/R VM19/E/R ; VM35/E/R | E | 1796 | 18NV,18SEH,18SV,E18NVR | M | | | 11/86 ▸ 03/94 | 90443402 | | 400 | 495 | ALB |
| 1.8 VF35R ; VM19R ; VM35R ; VF19/R | E | 1796 | 18NV,18SV,E18NVR | M | | | 11/86 ▸ 03/94 | 90443377 | | 562 | 475 | CBS |
| 1.8,1.8 i VF19/E/R ; VF35/E/R VM19/E/R ; VM35/E/R | E | 1796 | 18SEH,18SV | A | +/- | | 11/86 ▸ 09/90 | 52453033 | | 562 | 475 | CBS |
| 1.8 i VF35E ; VM19E ; VM35E ; VF19/E | E | 1796 | 18SEH | A | +/- | | 11/86 ▸ 08/92 | 90443377 | | 562 | 475 | CBS |
| 1.8 VF35R ; VM19R ; VM35R ; VF19/R | E | 1796 | 18SV,E18NVR | A | | | 11/86 ▸ 03/94 | 90443377 | | 562 | 475 | CBS |
| 1.8,1.8 i VF19/E/R ; VF35/E/R VM19/E/R ; VM35/E/R | E | 1796 | 18SEH,18SV,E18NVR | A | | | 11/86 ▸ 03/94 | 90443402 | | 400 | 495 | ALB |
| 1.8,1.8 i VF19/E/R ; VF35/E/R VM19/E/R ; VM35/E/R | E | 1796 | 18SEH,18SV,E18NVR | A | | | 11/86 ▸ 03/94 | 90443401 | | 400 | 495 | ALB |
| 1.8,1.8 i VF19/E/R ; VF35/E/R VM19/E/R ; VM35/E/R ▸ N1079968 | E | 1796 | 18SEH,18SV | M | +/- | | 11/86 ▸ 09/90 | 52453033 | | 562 | 475 | CBS |
| 2.0 i VM19T ; VM35T | E | 1998 | 20SE | M | +/- | | 11/86 ▸ 09/90 | 52453033 | | 562 | 475 | CBS |
| 2.0 i VF35D ; VM19I ; VM35I ; VF19/D | E | 1998 | C20NE | M | +/- | | 09/90 ▸ 05/94 | 90443377 | | 562 | 475 | CBS |
| 2.0 i VF35D ; VF19/D ; VM19/I/T ; VM35/I/T | E | 1998 | 20SE,C20NE,C20NEF,C20NEJ | M | | | 11/86 ▸ 05/94 | 90443402 | | 400 | 495 | ALB |
| 2.0 i VF35D ; VF19/D ; VM19/I/T ; VM35/I/T | E | 1998 | 20SE,C20NE,C20NEF,C20NEJ | M | | | 11/86 ▸ 05/94 | 90443401 | | 400 | 495 | ALB |
| 2.0 i VM19T ; VM35T | E | 1998 | 20SE,C20NE,C20NEF,C20NEJ | M | | | 11/86 ▸ 03/94 | 90443377 | | 562 | 475 | CBS |
| 2.0 i VM19T ; VM35T | E | 1998 | 20SE | A | +/- | | 11/86 ▸ 09/90 | 52453033 | | 562 | 475 | CBS |
| 2.0 i VF35D ; VF19/D ; VM35I ; VM19/I/T | E | 1998 | C20NE | A | +/- | | 09/90 ▸ 05/94 | 90443377 | | 562 | 475 | CBS |
| 2.0 i VM19T ; VM35T | E | 1998 | 20SE,C20NE,C20NEF,C20NEJ | A | | | 11/86 ▸ 03/94 | 90443377 | | 562 | 475 | CBS |

# VAUXHALL (.../...)

## CARLTON (.../...)

| | | CC | | AC | | | OE | Valeo | DIM. | TECH |
|---|---|---|---|---|---|---|---|---|---|---|
| 2.0 i VF35D ; VF19/D ; VM19/I/T ; VM35/I/T | E | 1998 | 20SE,C20NE,C20NEF,C20NEJ | A | | | 11/86 ▸ 05/94 | 90443401 | | 400 495 | ALB |
| 2.0 i VF35D ; VF19/D ; VM19/I/T ; VM35/I/T | E | 1998 | 20SE,C20NE,C20NEF,C20NEJ | A | | | 11/86 ▸ 05/94 | 90443402 | | 400 495 | ALB |
| 2.4 i | E | 2410 | C24NE | M | | | 09/88 ▸ 03/94 | 90443377 | | 562 475 | CBS |
| 2.4 i | E | 2410 | C24NE | A | | | 09/88 ▸ 03/94 | 90443377 | | 562 475 | CBS |
| 2.6 i VM19L ; VM35L | E | 2594 | C26NE | M | + | | 09/90 ▸ 05/94 | 90442752 | | 543 458 | ALB |
| 2.6 i VM19L ; VM35L | E | 2594 | C26NE | M | - | | 09/90 ▸ 05/94 | 90443377 | | 562 475 | CBS |
| 2.6 i VM19L ; VM35L | E | 2594 | C26NE | M | | | 09/90 ▸ 05/94 | 52453033 | | 562 475 | CBS |
| 2.6 i VM19L ; VM35L | E | 2594 | C26NE | A | + | | 09/90 ▸ 05/94 | 90442752 | | 543 458 | ALB |
| 2.6 i VM19L ; VM35L | E | 2594 | C26NE | A | - | | 09/90 ▸ 05/94 | 90443377 | | 562 475 | CBS |
| 2.6 i VM19L ; VM35L | E | 2594 | C26NE | A | | | 09/90 ▸ 05/94 | 52453033 | | 562 475 | CBS |
| 3.0 i 24V VN192 | E | 2968 | C30SE | M | + | | 10/89 ▸ 08/93 | 90443377 | | 562 475 | CBS |
| 3.0 i,3.0 i 24V | E | 2968 | 30NE,C30LE,C30NE,C30SE | M | | | 03/87 ▸ 03/94 | 90442752 | | 543 458 | ALB |
| 3.0 i | E | 2968 | 30NE,C30LE,C30NE | M | | | 03/87 ▸ 03/94 | 90443377 | | 562 475 | CBS |
| 3.0 i | E | 2968 | C30LE,C30NE | A | | | 03/87 ▸ 03/94 | 90442752 | | 543 458 | ALB |
| 3.0 i | E | 2968 | C30LE,C30NE | A | | | 03/87 ▸ 03/94 | 90443377 | | 562 475 | CBS |
| 3.0 i,3.0 i 24V VN192<br>▸ N1079968 | E | 2968 | 30NE,C30SE | M | + | | 03/87 ▸ 09/90 | 52453033 | | 562 475 | CBS |
| 3.0 i 24V | E | 2969 | C30SEJ | M | | | 09/89 ▸ 03/94 | 90442752 | | 543 458 | ALB |
| 3.0 i 24V | E | 2969 | C30SEJ | M | | | 09/89 ▸ 03/94 | 90443377 | | 562 475 | CBS |
| 3.0 i 24V | E | 2969 | C30SEJ | A | | | 09/89 ▸ 03/94 | 90443377 | | 562 475 | CBS |
| 3.0 i 24V | E | 2969 | C30SEJ | A | | | 09/89 ▸ 03/94 | 90442752 | | 543 458 | ALB |
| 2.3 D | D | 2260 | 23YD | M | +/- | | 11/86 ▸ 05/94 | 90443377 | | 562 475 | CBS |
| 2.3 D,2.3 TD Turbo | D | 2260 | 23DTR,23YD,23YDT | M | + | | 11/86 ▸ 05/94 | 90297862 | | 488 620 | CBS |
| 2.3 D,2.3 TD Turbo | D | 2260 | 23DTR,23YD,23YDT | M | - | | 11/86 ▸ 05/94 | 90297861 | | 425 595 | ALB |
| 2.3 D,2.3 TD Turbo | D | 2260 | 23DTR,23YD,23YDT | M | | | 11/86 ▸ 05/94 | 90443377 | | 562 475 | CBS |
| 2.3 D | D | 2260 | 23YD | A | + | | 11/86 ▸ 05/94 | 90297862 | | 488 620 | CBS |
| 2.3 D | D | 2260 | 23YD | A | - | | 11/86 ▸ 05/94 | 90297861 | | 425 595 | ALB |
| 2.3 D | D | 2260 | 23YD | A | | | 11/86 ▸ 05/94 | 90443377 | | 562 475 | CBS |
| 2.3 TD Turbo<br>J1172471 ▸ K1000100 | D | 2260 | 23DTR,23YDT | M | +/- | | 09/88 ▸ 1989 | 90324339 | | 425 595 | ALB |
| 2.3 D,2.3 TD Turbo<br>J1172471 ▸ K1000100 | D | 2260 | 23DTR,23YD | M | | | 09/88 ▸ 1989 | 90324339 | | 425 595 | ALB |
| 2.3 D<br>J1172471 ▸ K1000100 | D | 2260 | 23YD | A | | | 1988 ▸ 1989 | 90324339 | | 425 595 | ALB |
| 2.3 TD Turbo | D | 2260 | 23DTR | M | +/- | | 09/88 ▸ 1990 | 52453033 | | 562 475 | CBS |

## CAVALIER II (81>88)

| | | CC | | AC | | | OE | Valeo | DIM. | TECH |
|---|---|---|---|---|---|---|---|---|---|---|
| 1.3 9JF6/8/9 ; 9JM6/8/9 | E | 1297 | 13S | M | - | | 08/81 ▸ 08/86 | 03048797 | | 530 414 | ALM |
| 1.3 9JF6/8/9 ; 9JM6/8/9 | E | 1297 | 13S | M | - | TSW | 08/81 ▸ 08/88 | 03049245 | **883751** | 530 285 | ALM |
| 1.3 9JF6/8/9 ; 9JM6/8/9 | E | 1297 | 13S | M | - | TSW | 08/86 ▸ 08/88 | 90128036 | **883751** | 530 285 | ALM |
| 1.6 | E | 1598 | 16S | M | - | | 08/81 ▸ 08/88 | 03048799 | | 530 414 | ALM |
| 1.6 | E | 1598 | 16S | M | - | | 08/81 ▸ 08/88 | 90128774 | | 530 414 | ALM |
| 1.6 | E | 1598 | 16S | M | | | 08/81 ▸ 08/88 | 90128774 | | 530 414 | ALM |
| 1.8 i 0FJ6/8/9 ; 0JM6/8/9 | E | 1796 | 18E,18SE | M | - | | 10/82 ▸ 08/88 | 03048797 | | 530 414 | ALM |
| 1.6 D | D | 1598 | 16D | M | - | | 09/82 ▸ 08/88 | 03048799 | | 530 414 | ALM |

## CAVALIER III (88>95)

| | | CC | | AC | | | OE | Valeo | DIM. | TECH |
|---|---|---|---|---|---|---|---|---|---|---|
| 1.4 JF19J ; JF68J | E | 1389 | 14NV | M | + | TSW | 11/88 ▸ 08/92 | 90323474 | **883878** | 525 322 | ALM |
| 1.4 JF19J ; JF68J | E | 1389 | 14NV | M | - | TSW | 11/88 ▸ 08/92 | 90264491 | **883877** | 525 322 | ALM |
| 1.4 JF19J ; JF68J | E | 1389 | 14NV | M | | TSW | 11/88 ▸ 08/92 | 90442622 | **730395** | 540 377,5 | ALM |
| 1.6,1.6 i JF19/B/Z ; JF68/B/Z<br>JM19/B/Z ; JM68/B/Z | E | 1598 | 16SV,C16NZ,X16SZ | M | + | TSW | 10/88 ▸ 10/95 | 90323474 | **883878** | 525 322 | ALM |
| 1.6,1.6 i JF19/B/Z ; JF68/B/Z<br>JM19/B/Z ; JM68/B/Z | E | 1598 | 16SV,C16NZ,X16SZ | M | - | TSW | 10/88 ▸ 10/95 | 90264491 | **883877** | 525 322 | ALM |
| 1.6 i JF68Z ; JM19Z ; JM68Z ; JF19/Z | E | 1598 | C16NZ | M | - | TSW | 09/91 ▸ 10/95 | 90442622 | **730395** | 540 377,5 | ALM |
| 1.6 JF68B ; JM19B ; JM68B ; JF19/B | E | 1598 | 16SV | M | | TSW | 10/88 ▸ 08/92 | 90442622 | **730395** | 540 377,5 | ALM |
| 1.6 JM19B ; JM68B | E | 1598 | 16SV | A | + | TSW | 10/88 ▸ 08/92 | 90323474 | **883878** | 525 322 | ALM |
| 1.6 JM19B ; JM68B | E | 1598 | 16SV | A | - | TSW | 10/88 ▸ 08/92 | 90264491 | **883877** | 525 322 | ALM |
| 1.6 JM19B ; JM68B | E | 1598 | 16SV | A | | TSW | 10/88 ▸ 08/92 | 90442622 | **730395** | 540 377,5 | ALM |
| 1.8,1.8 i JM19/R/T ; JM68/R/T | E | 1796 | 18SV,C18NZ | M | + | TSW | 10/89 ▸ 10/95 | 90443463 | **731175** | 620 377,5 | ALM |
| 1.8,1.8 i JM19/R/T ; JM68/R/T | E | 1796 | 18SV,C18NZ | M | - | TSW | 10/89 ▸ 10/95 | 90442622 | **730395** | 540 377,5 | ALM |
| 1.8,1.8 i JM19/R/T ; JM68/R/T | E | 1796 | 18SV,C18NZ | A | + | TSW | 10/89 ▸ 10/95 | 90443463 | **731175** | 620 377,5 | ALM |
| 1.8,1.8 i JM19/R/T ; JM68/R/T | E | 1796 | 18SV,C18NZ | A | - | TSW | 10/89 ▸ 10/95 | 90442622 | **730395** | 540 377,5 | ALM |
| 2.0 i,2.0 i 16V JM19//F/H/I ; JM68 F/H | E | 1998 | 20NE,20SEH,20XEJ,C20NE,X20XEV | M | + | TSW | 10/88 ▸ 10/95 | 90443463 | **731175** | 620 377,5 | ALM |
| 2.0 i,2.0 i 16V<br>2.0 i Turbo JM19//F/H/I ; JM68 F/H | E | 1998 | 20NE,20SEH,20XEJ,C20LET,C20NE<br>X20XEV | M | - | TSW | 10/88 ▸ 10/95 | 90442622 | **730395** | 540 377,5 | ALM |
| 2.0 i JM19H ; JM68H | E | 1998 | 20NE,C20NE | A | + | TSW | 10/88 ▸ 05/94 | 90443463 | **731175** | 620 377,5 | ALM |
| 2.0 i JM19H ; JM68H | E | 1998 | 20NE,C20NE | A | - | TSW | 10/88 ▸ 05/94 | 90442622 | **730395** | 540 377,5 | ALM |

Radiator Ψυγείο Vodní chladič Радиатор vízhűtő Radiador Radiator Radyatör Radiator Radiatore di raffreddamento Motorkühler Radiateur Radiator



• **New** Nouveau **Nuevo** Novo **Nuovo** Nieuw **Neu** Nowość **Yeni** Новый Νέο **Novy**

# VAUXHALL (.../...)

## CAVALIER III (88>95) (.../...)

| Type Ctr. | | CC | | AC | | | OE | Valeo | DIM. | TECH |
|---|---|---|---|---|---|---|---|---|---|---|
| 2.0 i JM19H ; JM68H ▸ L5999999, LV299999 | E | 1998 | 20NE,C20NE | A | + | TSW | 10/88 ▸ | 90443466 | 730395 | 540 377,5 | ALM |
| 2.0 i,2.0 i 16V JM19/F/H/I ; JM68/F H ▸ LV299999, L5999999 | E | 1998 | 20NE,20SEH,20XEJ,C20NE | M | + | TSW | 10/88 ▸ | 90443466 | 730395 | 540 377,5 | ALM |
| 2.5 i V6 | E | 2498 | C25XE | M | +/- | | 02/93 ▸ 10/95 | 90443911 | 734604 | 617 374 | ALB |
| 1.7 D Turbo | D | 1686 | 17TD | M | +/- | TSW | 09/91 ▸ 10/95 | 90353027 | 731170 | 600 377,5 | ALM |
| 1.7 D JM19L ; JM69L | D | 1699 | 17D,17DR | M | +/- | TSW | 11/88 ▸ 10/95 | 90442583 | 730396 | 538 365 | ALB |

## CORSA I (93>2000)

| | | | | | | | | | | | |
|---|---|---|---|---|---|---|---|---|---|---|---|
| 1.0 i 12V | E | 973 | X10XE | M | +/- | TSW | 04/97 ▸ 08/00 | 52459322 | 734271 | 680 273 | ALB |
| 1.0 i 12V | E | 973 | X10XE | M | + | TSW | 04/97 ▸ 08/00 | 9180595 | 732607 | 680 285 | ALM |
| 1.0 i 12V | E | 973 | X10XE | M | - | TSW | 04/97 ▸ 08/00 | 90531547 | 732606 | 530 285 | ALB |
| 1.2 i | E | 1196 | C12NZ | M | + | TSW | 04/93 ▸ 08/98 | 52459322 | 734271 | 680 273 | ALB |
| 1.2 i | E | 1196 | C12NZ | M | - | TSW | 04/93 ▸ 08/98 | 90410048 | 731178 | 530 285 | ALM |
| 1.2 i 16V | E | 1199 | X12XE | M | +/- | TSW | 04/97 ▸ 08/00 | 52459322 | 734271 | 680 273 | ALB |
| 1.2 i 16V | E | 1199 | X12XE | M | + | TSW | 04/97 ▸ 08/00 | 9180595 | 732607 | 680 285 | ALM |
| 1.2 i 16V | E | 1199 | X12XE | M | - | TSW | 04/97 ▸ 08/00 | 90531547 | 732606 | 530 285 | ALB |
| 1.2 i 16V | E | 1199 | X12XE | A | +/- | | 04/97 ▸ 08/00 | 9180596 | | 680 285 | ALM |
| 1.4 i,1.4 i 16V | E | 1389 | C14NZ,C14SE,X14XE | M | + | TSW | 04/93 ▸ 08/00 | 52459322 | 734271 | 680 273 | ALB |
| 1.4 i | E | 1389 | C14NZ,C14SE | M | - | TSW | 04/93 ▸ 08/98 | 90410047 | 731013 | 530 285 | ALM |
| 1.4 i,1.4 i 16V | E | 1389 | C14NZ,C14SE,X14XE | M | - | TSW | 04/93 ▸ 08/00 | 90410048 | 731178 | 530 285 | ALM |
| 1.6 i 16V | E | 1598 | C16XE,X16XE | M | + | TSW | 08/93 ▸ 08/00 | 52459322 | 734271 | 680 273 | ALB |
| 1.6 i 16V | E | 1598 | C16XE,X16XE | M | - | TSW | 08/93 ▸ 08/00 | 90410048 | 731178 | 530 285 | ALM |
| 1.6 i 16V | E | 1598 | C16XE | M | - | TSW | 08/93 ▸ 06/95 | 90410047 | 731013 | 530 285 | ALM |
| 1.5 D,1.5 D Turbo | D | 1488 | 15D,15TD,X15DT | M | - | TSW | 04/93 ▸ 08/00 | 90410049 | 731179 | 650 266 | ALB |
| 1.7 D | D | 1699 | 17D | M | - | TSW | 02/96 ▸ 08/00 | 90410049 | 731179 | 650 266 | ALB |
| 1.7 D | D | 1699 | 17D | M | | TSW | 02/96 ▸ 08/00 | 90410049 | 731179 | 650 266 | ALB |

## CORSA II (2000>2003)

| | | | | | | | | | | | |
|---|---|---|---|---|---|---|---|---|---|---|---|
| 1.0 i 12V | E | 973 | Z10XE | M | + | | 09/00 ▸ 08/03 | 9201955 | 732825 | 540 377,5 | ALM |
| 1.0 i 12V | E | 973 | Z10XE | M | - | | 09/00 ▸ 08/03 | 93173379 | 732825 | 540 377,5 | ALM |
| 1.2 i 16V | E | 1199 | Z12XE | M | +/- | | 09/00 ▸ 08/03 | 9201955 | 732825 | 540 377,5 | ALM |
| 1.2 i 16V | E | 1199 | Z12XE | M | | | 09/00 ▸ 08/03 | 9201955 | 732825 | 540 377,5 | ALM |
| 1.4 i 16V | E | 1389 | Z14XE | M | - | | 09/00 ▸ 08/03 | 9201956 | 732826 | 540 377,5 | ALM |
| 1.4 i 16V | E | 1389 | Z14XE | A | + | | 09/00 ▸ 08/03 | 9201956 | 732826 | 540 377,5 | ALM |
| 1.8 i 16V | E | 1796 | Z18XE | M | - | | 09/00 ▸ 08/03 | 9201956 | 732826 | 540 377,5 | ALM |
| 1.7 DTi 16V,1.7 Di 16V | D | 1686 | Y17DT,Y17DTL | M | | | 09/00 ▸ 08/03 | 9196694 | 732824 | 628 377,5 | ALM |

## CORSA II (2003>)

| | | | | | | | | | | | |
|---|---|---|---|---|---|---|---|---|---|---|---|
| 1.0 i Twinport 12V AB08C ; AB68C | E | 998 | Z10XEP | M | +/- | | 09/03 ▸ 10/06 | 9201955 | 732825 | 540 377,5 | ALM |
| 1.0 i 12V AB68C ; AC08C<br>1.0 i Twinport 12V AC68C ; AE08C<br>AE68C ; AB08/C | E | 998 | Z10XEP | M | + | | 09/03 ▸ 10/06 | 9201955 | 732825 | 540 377,5 | ALM |
| 1.0 i 12V AB68C ; AC08C<br>1.0 i Twinport 12V AC68C ; AE08C<br>AE68C ; AB08/C | E | 998 | Z10XEP | M | - | | 09/03 ▸ 10/06 | 93173379 | 732825 | 540 377,5 | ALM |
| 1.2 i 16V A.68E ; AB08E<br>1.2 i Dualfuel 16V AB68E ; AC08E<br>AC68E ; AE08E ; AE68E ; A.08/E | E | 1199 | Z12-LPG,Z12XE | M | +/- | | 09/03 ▸ 10/06 | 9201955 | 732825 | 540 377,5 | ALM |
| 1.4 i Twinport 16V AS08G ; AS68G | E | 1364 | Z14XEP | M | +/- | | 09/03 ▸ 10/06 | 9201955 | 732825 | 540 377,5 | ALM |
| 1.4 i Twinport 16V AE08G ; AE68G | E | 1364 | Z14XEP | M | + | | 09/03 ▸ 10/06 | 9201955 | 732825 | 540 377,5 | ALM |
| 1.4 i Twinport 16V AE68G ; AS08G<br>AS68G ; AE08/G | E | 1364 | Z14XEP | M | - | | 09/03 ▸ 10/06 | 9201956 | 732826 | 540 377,5 | ALM |
| 1.4 i Twinport 16V | E | 1364 | Z14XEP | A | + | | 09/03 ▸ 10/06 | 9201955 | 732825 | 540 377,5 | ALM |
| 1.4 i Twinport 16V | E | 1364 | Z14XEP | A | | | 09/03 ▸ 10/06 | 9201956 | 732826 | 540 377,5 | ALM |
| 1.8 i 16V AS08K ; AS68K | E | 1796 | Z18XE | M | - | | 09/03 ▸ 10/06 | 9201956 | 732826 | 540 377,5 | ALM |
| 1.3 CDTI 16V AB08F ; AB68F<br>AC08F ; AC68F ; AE08F ; AE68F ; AS08F<br>AS68F ; A.08/F | D | 1248 | Z13DT | M | + | | 09/03 ▸ 10/06 | 93177424 | 734464 | 600 350 | ALM |
| 1.3 CDTI 16V AB08F ; AB68F<br>AC08F ; AC68F ; AE08F ; AE68F ; AS08F<br>AS68F ; A.08/F | D | 1248 | Z13DT | M | - | | 09/03 ▸ 10/06 | 93177593 | 734464 | 600 350 | ALM |
| 1.3 CDTI 16V AB08F ; AB68F<br>AC08F ; AC68F ; AE08F ; AE68F ; AS08F<br>AS68F ; A.08/F | D | 1248 | Z13DT | M | | | 09/03 ▸ 10/06 | 9196694 | 732824 | 628 377,5 | ALM |
| 1.7 CDTI 16V AS08J ; AS68J | D | 1686 | Z17DTH | M | + | | 09/03 ▸ 10/06 | 93177424 | 734464 | 600 350 | ALM |
| 1.7 CDTI 16V AS08J ; AS68J | D | 1686 | Z17DTH | M | - | | 09/03 ▸ 10/06 | 93177593 | 734464 | 600 350 | ALM |

# VAUXHALL (.../...)

## CORSA II (2003>) (.../...)

| | | CC | | AC | | | OE | Valeo | DIM. | TECH |
|---|---|---|---|---|---|---|---|---|---|---|
| 1.7 CDTI 16V AS08J ; AS68J | D | 1686 | Z17DTH | M | | | 09/03 ▸ 10/06 | 9196694 | **732824** | 628 377,5 | ALM |

## CORSA IV (2006>)

| | | | | | | | | | | | |
|---|---|---|---|---|---|---|---|---|---|---|---|
| 1.0 i 65 12V | E | 997 | A10XEP | M | | | 01/10 ▸ | 55701408 | **735097** | 540 377,5 | ALM |
| 1.0 i 60 12V | E | 998 | Z10XEP | M | +/- | | 07/06 ▸ | 55701408 | **735097** | 540 377,5 | ALM |
| 1.2 i 16V | E | 1229 | Z12XEP | M | +/- | | 07/06 ▸ | 55701408 | **735097** | 540 377,5 | ALM |
| 1.2 i 16V | E | 1229 | Z12XEP | M | | | 09/09 ▸ | 55701408 | **735097** | 540 377,5 | ALM |
| 1.4 i 16V | E | 1364 | Z14XEP | M | +/- | | 07/06 ▸ | 55701408 | **735097** | 540 377,5 | ALM |
| 1.4 i 16V | E | 1364 | Z14XEP | A | +/- | | 07/06 ▸ | 55701408 | **735097** | 540 377,5 | ALM |
| 1.4 i 16V | E | 1364 | Z14XEP | A | | | 07/06 ▸ | 55701408 | **735097** | 540 377,5 | ALM |
| 1.6 i 16V | E | 1598 | Z16LEL | M | +/- | | 02/07 ▸ | 55701408 | **735097** | 540 377,5 | ALM |
| 1.6 i 16V | E | 1598 | A16LEL,A16LER,Z16LEL,Z16LER | M | | | 02/07 ▸ | 55703927 | **735041** | 620 414,5 | ALB |
| 1.3 CDTi 75 16V | D | 1248 | Z13DTJ | M | +/- | | 07/06 ▸ | 55703926 | **735040** | 620 395 | ALB |
| 1.3 CDTi 90 16V | D | 1248 | Z13DTH | M | +/- | | 07/06 ▸ | 55703927 | **735041** | 620 414,5 | ALB |
| 1.3 CDTi 75 16V | D | 1248 | Z13DTJ | M | | | 07/09 ▸ | 55703926 | **735040** | 620 395 | ALB |
| 1.3 CDTi 90 16V,1.3 CDTi 95 16V ▸ 949999991 | D | 1248 | A13DTE/F,A13DTR,Z13DTE,Z13DTH | M | | | 07/06 ▸ | 55703927 | **735041** | 620 414,5 | ALB |
| 1.7 CDTi 125 16V | D | 1686 | Z17DTR/F | M | +/- | | 07/06 ▸ | 55703927 | **735041** | 620 414,5 | ALB |
| 1.7 CDTi 130 16V | D | 1686 | A17DTS/F | M | | | 01/10 ▸ | 55703927 | **735041** | 620 414,5 | ALB |

## FRONTERA (91>98)

| | | | | | | | | | | | |
|---|---|---|---|---|---|---|---|---|---|---|---|
| 2.0 i 52SUD | E | 1998 | C20NE | M | +/- | TSW | 10/91 ▸ 04/95 | 91146915 | **735229** | 500 620 | |
| 2.0 i 55SUD | E | 1998 | X20SE | M | +/- | TSW | 04/95 ▸ 09/98 | 91147724 | **731236** | 425 595 | CBS |
| 2.2 i 54MWL | E | 2198 | X22XE | M | +/- | TSW | 04/95 ▸ 09/98 | 91147724 | **731236** | 425 595 | CBS |
| 2.4 i 53MWL | E | 2410 | C24NE | M | +/- | TSW | 10/91 ▸ 04/95 | 91146915 | **735229** | 500 620 | |
| 2.3 TD 5JMWL | D | 2260 | 23DTR | M | +/- | | 10/91 ▸ 04/95 | 91146914 | **731237** | 423 585 | ALB |
| 2.5 TDS 5KMWL ; 5KSUD | D | 2499 | 25TDS | M | +/- | | 06/96 ▸ 09/98 | 91153279 | **734353** | 410 610 | ALB |
| 2.8 TDi 5BMWL ; 5BSUD | D | 2771 | 4JB1-TC | M | +/- | | 04/95 ▸ 09/98 | 91149885 | **731237** | 423 585 | ALB |

## INSIGNIA

| | | | | | | | | | | | |
|---|---|---|---|---|---|---|---|---|---|---|---|
| 1.6 i Turbo 16V | E | 1598 | A16LET | M | + | | 03/09 ▸ | 13241726 | •**735485** | 680 398 | ALB |
| 1.8 i 16V | E | 1796 | A18XER | M | + | | 01/09 ▸ | 13241726 | •**735485** | 680 398 | ALB |
| 2.0 i Turbo 16V | E | 1998 | A20NHT | M | + | | 01/09 ▸ | 13241728 | •**735483** | 680 398 | ALB |
| 2.0 i Turbo 16V | E | 1998 | A20NHT | A | + | | 01/09 ▸ | 13241729 | •**735484** | 680 398 | ALB |
| 2.8 i V6 Turbo 24V | E | 2792 | A28NET | M | + | | 01/09 ▸ | 13241723 | •**735488** | 680 398 | ALB |
| 2.8 i V6 Turbo 24V | E | 2792 | A28NET | A | + | | 01/09 ▸ | 13241722 | •**735487** | 680 398 | ALB |
| 2.0 CDTi 16V | D | 1956 | A20DTH/F,A20DTJ/F | A | + | | 01/09 ▸ | 13241724 | •**735486** | 680 398 | ALB |

## MERIVA

| | | | | | | | | | | | |
|---|---|---|---|---|---|---|---|---|---|---|---|
| 1.4 i Twinport 16V | E | 1364 | Z14XEP | M | +/- | | 09/04 ▸ 07/10 | 13128930 | **734384** | 608 375 | |
| 1.6 i,1.6 i 16V | E | 1598 | Z16SE/E4,Z16XE | M | + | | 05/03 ▸ 08/04 | 13128930 | **734384** | 608 375 | |
| 1.6 i,1.6 i 16V | E | 1598 | Z16SE/E4,Z16XE | M | - | | 05/03 ▸ 08/04 | 13130015 | **734384** | 608 375 | |
| 1.8 i 16V | E | 1796 | Z18XE | M | + | | 05/03 ▸ 07/10 | 13128930 | **734384** | 608 375 | |
| 1.8 i 16V | E | 1796 | Z18XE | M | - | | 05/03 ▸ 07/10 | 13130015 | **734384** | 608 375 | |
| 1.3 CDTi 16V | D | 1248 | Y13DT,Z13DT,Z13DTJ | M | +/- | | 08/03 ▸ 07/10 | 13148295 | **734386** | 600 370 | |
| 1.7 DTi 16V | D | 1686 | Y17DT | M | | | 05/03 ▸ 07/10 | 13130038 | **734385** | 607 370 | |
| 1.7 CDTi 16V,1.7 DTi 16V | D | 1686 | Y17DT,Z17DTH | M | | | 05/03 ▸ 07/10 | 13148295 | **734386** | 600 370 | |

## MONTEREY A (94>99)

| | | | | | | | | | | | |
|---|---|---|---|---|---|---|---|---|---|---|---|
| 3.2 i UBS25 | E | 3165 | 6VDI | M | | TSW | 05/94 ▸ 06/98 | 97036932 | **731236** | 425 595 | CBS |
| 3.2 i UBS25 | E | 3165 | 6VDI | A | | | 05/94 ▸ 06/98 | 97036933 | | | |

## NOVA

| | | | | | | | | | | | |
|---|---|---|---|---|---|---|---|---|---|---|---|
| 1.0 SF11M ; SF19M ; SF68M ; SF08/M | E | 993 | 10S | M | + | TSW | 04/83 ▸ 03/92 | 52459323 | **732032** | 680 273 | ALM |
| 1.0 SF11M ; SF19M ; SF68M ; SF08/M | E | 993 | 10S | M | - | TSW | 04/83 ▸ 03/92 | 90410048 | **731178** | 530 285 | ALM |
| 1.0 SF11M ; SF19M ; SF68M ; SF08/M | E | 993 | 10S | M | | TSW | 04/83 ▸ 03/92 | 90136828 | **883767** | 530 299 | ALM |
| 1.2 SF19 | E | 1195 | 12NC,E12GV | M | | TSW | 01/85 ▸ 10/89 | 90136828 | **883767** | 530 299 | ALM |
| 1.2,1.2 i SF11N ; SF19N SF68N ; SF08/N | E | 1196 | 12NV,12ST,C12NZ | M | + | TSW | 04/83 ▸ 03/93 | 52459323 | **732032** | 680 273 | ALM |
| 1.2,1.2 i SF11N ; SF19N SF68N ; SF08/N | E | 1196 | 12NV,12ST,C12NZ | M | - | TSW | 04/83 ▸ 03/93 | 90410048 | **731178** | 530 285 | ALM |
| 1.2,1.2 i SF08N ; SF19N | E | 1196 | 12NV,C12NZ | M | | TSW | 04/83 ▸ 03/93 | 90352138 | **883881** | 525 322 | ALM |
| 1.2 SF11N ; SF19N ; SF68N ; SF08/N ▸ F4253975 | E | 1196 | 12NV,12ST | M | | TSW | 04/83 ▸ | 90136753 | **883771** | 530 285 | ALM |
| 1.3 | E | 1297 | 13SB | M | + | TSW | 07/83 ▸ 09/89 | 52459323 | **732032** | 680 273 | ALM |
| 1.3 | E | 1297 | 13SB | M | - | TSW | 07/83 ▸ 09/89 | 90410048 | **731178** | 530 285 | ALM |
| 1.3 ▸ J4327959 | E | 1297 | 13SB | M | | TSW | > ▸ 09/89 | 90298318 | **883920** | 530 229 | ALM |

Radiator Radiateur Motorkühler Radiatore di raffreddamento Radiator Radyatör Radiador Радиатор vízhűtő Vodní chladič Radiator Ψυγείο



• **New** Nouveau **Nuevo** Novo **Nuovo** Nieuw **Neu** Nowość **Yeni** Новый Νέο **Nový**

# VAUXHALL (.../...)

| | Type Ctr. | | CC | | | AC | | | OE | Valeo | DIM. | | TECH |
|---|---|---|---|---|---|---|---|---|---|---|---|---|---|
| **NOVA (.../...)** | | | | | | | | | | | | | |
| 1.3 ▸ J4327958 | | E | 1297 | 13SB | M | | TSW | 07/83 ▸ | 90136753 | **883771** | 530 | 285 | ALM |
| 1.4,1.4 i | SF19X ; SF68X ; SF08 J/X | E | 1389 | 14NV,C14NZ | M | + | TSW | 10/89 ▸ 03/93 | 52459323 | **732032** | 680 | 273 | ALM |
| 1.4,1.4 i | SF19X ; SF68X ; SF08 J/X | E | 1389 | 14NV,C14NZ | M | - | TSW | 10/89 ▸ 03/93 | 90410048 | **731178** | 530 | 285 | ALM |
| 1.4 | SF08J | E | 1389 | 14NV | M | | TSW | 10/89 ▸ 01/92 | 90352138 | **883881** | 525 | 322 | ALM |
| 1.4,1.4 i | SF19X ; SF68X ; SF08 X | E | 1389 | C14NZ,C14SE | M | | TSW | 08/90 ▸ 03/93 | 90136753 | **883771** | 530 | 285 | ALM |
| 1.4,1.4 i ▸ L4242422 | SF19X ; SF68X ; SF08 J/X | E | 1389 | 14NV,C14NZ | M | | TSW | 10/89 ▸ 01/93 | 90298318 | **883920** | 530 | 229 | ALM |
| 1.6 i | SF08P | E | 1598 | C16SE,E16SE | M | + | TSW | 05/88 ▸ 03/93 | 52459323 | **732032** | 680 | 273 | ALM |
| 1.6 i | SF08P | E | 1598 | C16SE,E16SE | M | - | TSW | 05/88 ▸ 03/93 | 90410048 | **731178** | 530 | 285 | ALM |
| 1.6 i | | E | 1598 | C16SE,E16SE | M | | TSW | 05/88 ▸ 03/93 | 90136753 | **883771** | 530 | 285 | ALM |
| 1.5 D | SF08F ; SF68F | D | 1488 | 4EC1 | M | + | TSW | 09/91 ▸ 03/93 | 52459323 | **732032** | 680 | 273 | ALM |
| 1.5 D | SF08F ; SF68F | D | 1488 | 4EC1 | M | - | TSW | 09/91 ▸ 03/93 | 90410048 | **731178** | 530 | 285 | ALM |
| 1.5 TD | SF08D ; SF68B | D | 1488 | T4EC1 | M | | TSW | 09/89 ▸ 03/93 | 90299108 | **819389** | 690 | 268 | ALB |
| 1.5 TD | SF08D ; SF68B | D | 1488 | T4EC1 | M | | TSW | 09/89 ▸ 03/93 | 90410049 | **731179** | 650 | 266 | ALB |
| 1.5 D,1.5 TD | SF08/D/F ; SF68/B/F | D | 1488 | 4EC1,T4EC1 | M | | TSW | 09/89 ▸ 03/93 | 90298560 | **819388** | 690 | 268 | ALB |
| **OMEGA** | | | | | | | | | | | | | |
| 2.0 i,2.0 i 16V | F69 ; M35 | E | 1998 | X20SE,X20XEV | M | - | TSW | 04/94 ▸ 12/03 | 52463044 | **731839** | 535 | 370 | ALB |
| 2.0 i,2.0 i 16V | F69 ; M35 | E | 1998 | X20SE,X20XEV | A | +/- | TSW | 04/94 ▸ 12/03 | 52463043 | **731839** | 535 | 370 | ALB |
| 2.0 i,2.0 i 16V | F69 ; M35 | E | 1998 | X20SE,X20XEV | A | - | TSW | 04/94 ▸ 12/03 | 52463044 | **731839** | 535 | 370 | ALB |
| 2.5 i V6 24V | M35 | E | 2498 | X25XE-170 | A | - | TSW | 04/94 ▸ 12/03 | 52463045 | **731840** | 655 | 464 | CBS |
| 2.5 i V6 24V ▸ T1000001 | F69 ; M35 | E | 2498 | X25XE-170 | M | - | | 07/95 ▸ | 52464745 | **735065** | 653 | 445 | ALB |
| 3.0 i,3.0 i V6 ▸ T1000001 | F69 ; M35 | E | 2962 | X30XE | M | - | | 07/95 ▸ | 52464745 | **735065** | 653 | 445 | ALB |
| 2.0 Di 16V | F69 | D | 1995 | X20DTH | M | +/- | | 01/98 ▸ 09/00 | 52479474 | | 655 | 370 | ALB |
| 2.0 Di 16V | | D | 1995 | X20DTH | M | + | | 01/98 ▸ 09/00 | 52479474 | | 655 | 370 | ALB |
| 2.0 Di 16V | F69 | D | 1995 | X20DTH | A | +/- | | 01/98 ▸ 09/00 | 52479474 | | 655 | 370 | ALB |
| 2.0 Di 16V | | D | 1995 | X20DTH | A | | | 01/98 ▸ 09/00 | 52479474 | | 655 | 370 | ALB |
| 2.2 DTi 16V | | D | 2171 | Y22DTH | M | + | | 09/00 ▸ 12/03 | 52479474 | | 655 | 370 | ALB |
| 2.5 TD | F69 ; M35 | D | 2497 | U25TD,X25TD | M | + | TSW | 04/94 ▸ 12/03 | 52463054 | **731843** | 653 | 460 | ALB |
| 2.5 TD | F69 ; M35 | D | 2497 | U25TD,X25TD | M | + | TSW | 04/94 ▸ 12/03 | 52463053 | **734389** | 653 | 460 | ALB |
| 2.5 TD | F69 ; M35 | D | 2497 | U25TD,X25TD | A | + | TSW | 04/94 ▸ 12/03 | 52463054 | **731843** | 653 | 460 | ALB |
| **SENATOR (87>93)** | | | | | | | | | | | | | |
| 2.5 i | P19 | E | 2490 | 25NE | M | | | 09/87 ▸ 09/90 | 52453033 | | 562 | 475 | CBS |
| 2.5 i | P19 | E | 2490 | 25NE | A | | | 09/87 ▸ 09/90 | 90443377 | | 562 | 475 | CBS |
| 2.6 i | VP19L | E | 2594 | C26NE | M | | | 09/90 ▸ 08/93 | 90443377 | | 562 | 475 | CBS |
| 2.6 i | VP19L | E | 2594 | C26NE | A | | | 09/90 ▸ 08/93 | 52453033 | | 562 | 475 | CBS |
| 3.0 i,3.0 i 24V | P19 ; VP19Q | E | 2968 | 30NE,C30NE,C30SE | M | | | 09/87 ▸ 08/93 | 52453033 | | 562 | 475 | CBS |
| 3.0 i,3.0 i 24V | P19 ; VP19Q | E | 2968 | 30NE,C30NE,C30SE | A | | | 09/87 ▸ 08/93 | 52453033 | | 562 | 475 | CBS |
| **SIGNUM (2003>2005)** | | | | | | | | | | | | | |
| 1.8 i 16V | | E | 1796 | Z18XE | M | +/- | | 06/03 ▸ 09/05 | 24418338 | **732879** | 649,4 | 403,3 | ALM |
| 2.0 i Turbo 16V | | E | 1998 | Z20NET | M | +/- | | 06/03 ▸ 09/05 | 24418341 | **732876** | 650 | 414,5 | ALB |
| 2.2 DIG 16V | | E | 2198 | Z22YH | M | + | | 06/03 ▸ 09/05 | 24418343 | **732877** | 650 | 414,5 | ALB |
| 2.2 DIG 16V | | E | 2198 | Z22YH | M | - | | 06/03 ▸ 09/05 | 24418341 | **732876** | 650 | 414,5 | ALB |
| 2.2 DIG 16V | | E | 2198 | Z22YH | A | +/- | | 06/03 ▸ 09/05 | 24418344 | **732878** | 650 | 414,5 | ALB |
| 3.2 i V6 24V | | E | 3175 | Z32SE | M | +/- | | 06/03 ▸ 09/05 | 24418341 | **732876** | 650 | 414,5 | ALB |
| 3.2 i V6 24V | | E | 3175 | Z32SE | A | +/- | | 06/03 ▸ 09/05 | 24418344 | **732878** | 650 | 414,5 | ALB |
| 1.9 CDTI | | D | 1910 | Z19DT | M | +/- | | 04/04 ▸ 09/05 | 13196477 | •**735085** | 649 | 414,5 | ALB |
| 1.9 CDTi 16V | | D | 1910 | Z19DTH | M | + | | 04/04 ▸ 09/05 | 24418345 | **734339** | 649 | 414,5 | ALB |
| 1.9 CDTi 16V | | D | 1910 | Z19DTH | M | - | | 04/04 ▸ 09/05 | 13196477 | •**735085** | 649 | 414,5 | ALB |
| 1.9 CDTi 16V | | D | 1910 | Z19DTH | A | +/- | | 04/04 ▸ 09/05 | 13156387 | **734345** | 649 | 414,5 | ALB |
| 1.9 CDTi 16V | | D | 1910 | Z19DTH | A | - | | 04/04 ▸ 09/05 | 13196477 | •**735085** | 649 | 414,5 | ALB |
| 2.0 DTi 16V | | D | 1995 | Y20DTH | M | + | | 06/03 ▸ 09/05 | 24418343 | **732877** | 650 | 414,5 | ALB |
| 2.0 DTi 16V | | D | 1995 | Y20DTH | M | - | | 06/03 ▸ 09/05 | 24418341 | **732876** | 650 | 414,5 | ALB |
| 2.2 DTi 16V | | D | 2171 | Y22DTR | M | + | | 06/03 ▸ 09/05 | 24418343 | **732877** | 650 | 414,5 | ALB |
| 2.2 DTi 16V | | D | 2171 | Y22DTR | M | - | | 06/03 ▸ 09/05 | 24418341 | **732876** | 650 | 414,5 | ALB |
| 2.2 DTi 16V | | D | 2171 | Y22DTR | A | +/- | | 06/03 ▸ 09/05 | 24418344 | **732878** | 650 | 414,5 | ALB |
| 3.0 CDTi V6 24V | | D | 2958 | Y30DT | M | + | | 06/03 ▸ 09/05 | 13108569 | **734302** | 649 | 414,5 | ALB |
| 3.0 CDTi V6 24V | | D | 2958 | Y30DT | A | + | | 06/03 ▸ 09/05 | 13108569 | **734302** | 649 | 414,5 | ALB |
| **SIGNUM B (2005>)** | | | | | | | | | | | | | |
| 1.8 i 16V | | E | 1796 | Z18XE | M | | | 10/05 ▸ 11/08 | 24418338 | **732879** | 649,4 | 403,3 | ALM |

# VAUXHALL (.../...)

## SIGNUM B (2005>) (.../...)

| | | CC | | AC | | | OE | Valeo | DIM. | TECH |
|---|---|---|---|---|---|---|---|---|---|---|
| 2.0 i Turbo 16V | E | 1998 | Z20NET | M | | | 10/05 ▸ 11/08 | 24418341 | **732876** | 650 414,5 | ALB |
| 2.2 DGI 16V | E | 2198 | Z22YH | M | + | | 10/05 ▸ 11/08 | 24418343 | **732877** | 650 414,5 | ALB |
| 2.2 DGI 16V | E | 2198 | Z22YH | M | - | | 10/05 ▸ 11/08 | 24418341 | **732876** | 650 414,5 | ALB |
| 2.2 DGI 16V | E | 2198 | Z22YH | A | | | 10/05 ▸ 11/08 | 24418344 | **732878** | 650 414,5 | ALB |
| 2.8 i V6 Turbo 24V | E | 2792 | Z28NEL | M | | TSW | 10/05 ▸ 12/06 | 12805057 | •**735083** | 650 414,5 | ALB |
| 2.8 i V6 Turbo 24V | E | 2792 | Z28NEL | A | | TSW | 10/05 ▸ 12/06 | 12805057 | •**735083** | 650 414,5 | ALB |
| 1.9 CDTI 16V | D | 1910 | Z19DTH | M | + | | 10/05 ▸ 11/08 | 24418345 | **734339** | 649 414,5 | ALB |
| 1.9 CDTI 16V | D | 1910 | Z19DTH | M | - | | 10/05 ▸ 11/08 | 13196477 | •**735085** | 649 414,5 | ALB |
| 1.9 CDTI | D | 1910 | Z19DT,Z19DTL | M | +/- | | 10/05 ▸ 11/08 | 13196477 | •**735085** | 649 414,5 | ALB |
| 1.9 CDTI 16V | D | 1910 | Z19DTH | A | | | 10/05 ▸ 11/08 | 13156387 | **734345** | 649 414,5 | ALB |
| 3.0 CDTI V6 24V | D | 2958 | Z30DT | M | | | 10/05 ▸ 11/08 | 13108569 | **734302** | 649 414,5 | ALB |
| 3.0 CDTI V6 24V | D | 2958 | Z30DT | A | | | 10/05 ▸ 11/08 | 13108569 | **734302** | 649 414,5 | ALB |

## TIGRA

| | | | | | | | | | | | |
|---|---|---|---|---|---|---|---|---|---|---|---|
| 1.4 i 16V F07 | E | 1389 | X14XE | M | + | TSW | 11/94 ▸ 01/01 | 52459322 | **734271** | 680 273 | ALB |
| 1.4 i 16V F07 | E | 1389 | X14XE | M | - | TSW | 11/94 ▸ 01/01 | 90410048 | **731178** | 530 285 | ALM |
| 1.4 i 16V F07 | E | 1389 | X14XE | A | + | TSW | 02/95 ▸ 01/01 | 52459322 | **734271** | 680 273 | ALB |
| 1.4 i 16V F07 | E | 1389 | X14XE | A | - | TSW | 02/95 ▸ 01/01 | 90410048 | **731178** | 530 285 | ALM |
| 1.6 i 16V F07 | E | 1598 | X16XE | M | + | TSW | 11/94 ▸ 01/01 | 52459322 | **734271** | 680 273 | ALB |
| 1.6 i 16V F07 | E | 1598 | X16XE | M | - | TSW | 11/94 ▸ 01/01 | 90410048 | **731178** | 530 285 | ALM |

## VECTRA (95>2002)

| | | | | | | | | | | | |
|---|---|---|---|---|---|---|---|---|---|---|---|
| 1.6 i,1.6 i 16V JF19 ; JF68 | E | 1598 | X16SZR,X16XEL | M | + | TSW | 10/95 ▸ 03/02 | 52479099 | **732347** | 628 377,5 | ALM |
| 1.6 i,1.6 i 16V JF19 ; JF68 | E | 1598 | X16SZR,X16XEL | M | - | TSW | 10/95 ▸ 03/02 | 90499823 | **731393** | 540 377 | ALM |
| 1.6 i 16V JF19 ; JF68 | E | 1598 | X16XEL | A | + | TSW | 10/95 ▸ 03/02 | 52479099 | **732347** | 628 377,5 | ALM |
| 1.6 i 16V JF19 ; JF68 | E | 1598 | X16XEL | A | - | TSW | 10/95 ▸ 03/02 | 90499823 | **731393** | 540 377 | ALM |
| 1.8 i 16V JF35 ; JF68 | E | 1796 | Z18XE | M | + | TSW | 10/95 ▸ 03/02 | 52479099 | **732347** | 628 377,5 | ALM |
| 1.8 i 16V JF35 ; JF68 | E | 1796 | Z18XE | M | - | TSW | 10/95 ▸ 03/02 | 90499823 | **731393** | 540 377 | ALM |
| 1.8 i 16V JF35 ; JF68 ; JF19 | E | 1796 | Z18XE | A | + | TSW | 09/00 ▸ 03/02 | 52479099 | **732347** | 628 377,5 | ALM |
| 1.8 i 16V JF35 ; JF68 ; JF19 | E | 1796 | Z18XE | A | - | TSW | 09/00 ▸ 03/02 | 90499823 | **731393** | 540 377 | ALM |
| 1.8 i 16V JF35 ; JF68 ; JF19 | E | 1799 | X18XE | M | + | TSW | 10/95 ▸ 03/02 | 52479099 | **732347** | 628 377,5 | ALM |
| 1.8 i 16V JF35 ; JF68 ; JF19 | E | 1799 | X18XE | M | - | TSW | 10/95 ▸ 03/02 | 90499823 | **731393** | 540 377 | ALM |
| 1.8 i 16V JF35 ; JF68 ; JF19 | E | 1799 | X18XE | A | + | TSW | 10/95 ▸ 03/02 | 52479099 | **732347** | 628 377,5 | ALM |
| 1.8 i 16V JF35 ; JF68 ; JF19 | E | 1799 | X18XE | A | - | TSW | 10/95 ▸ 03/02 | 90499823 | **731393** | 540 377 | ALM |
| 2.0 i 16V JF35 ; JF68 ; JF19 | E | 1998 | X20XEV | M | + | TSW | 10/95 ▸ 08/00 | 52479099 | **732347** | 628 377,5 | ALM |
| 2.0 i 16V JF35 ; JF68 ; JF19 | E | 1998 | X20XEV | M | - | TSW | 10/95 ▸ 08/00 | 90499823 | **731393** | 540 377 | ALM |
| 2.0 i 16V JF35 ; JF68 ; JF19 | E | 1998 | X20XEV | A | + | TSW | 10/95 ▸ 08/00 | 52479099 | **732347** | 628 377,5 | ALM |
| 2.0 i 16V JF35 ; JF68 ; JF19 | E | 1998 | X20XEV | A | - | TSW | 10/95 ▸ 08/00 | 90499823 | **731393** | 540 377 | ALM |
| 2.2 i 16V JF | E | 2198 | Z22SE | M | + | | 09/00 ▸ 03/02 | 52492106 | | 628 377,5 | ALM |
| 2.2 i 16V JF | E | 2198 | Z22SE | M | - | TSW | 09/00 ▸ 03/02 | 24402888 | **731393** | 540 377 | ALM |
| 2.2 i 16V JF | E | 2198 | Z22SE | A | + | | 09/00 ▸ 03/02 | 52492106 | | 628 377,5 | ALM |
| 2.2 i 16V JF | E | 2198 | Z22SE | A | - | TSW | 09/00 ▸ 03/02 | 24402888 | **731393** | 540 377 | ALM |
| 2.5 i V6 24V JF35 ; JF68 ; JF19 | E | 2498 | X25XE-170,X25XE-195 | M | + | TSW | 10/95 ▸ 03/02 | 52479100 | **732348** | 628 377,5 | ALM |
| 2.5 i V6 24V JF35 ; JF68 ; JF19 | E | 2498 | X25XE-170,X25XE-195 | M | - | TSW | 10/95 ▸ 03/02 | 52479099 | **732347** | 628 377,5 | ALM |
| 2.5 i V6 24V JF35 ; JF68 ; JF19 | E | 2498 | X25XE-170 | A | + | TSW | 10/95 ▸ 03/02 | 52479100 | **732348** | 628 377,5 | ALM |
| 2.5 i V6 24V JF35 ; JF68 ; JF19 | E | 2498 | X25XE-170 | A | - | TSW | 10/95 ▸ 03/02 | 52479099 | **732347** | 628 377,5 | ALM |
| 2.6 i V6 24V | E | 2597 | Y26SE | M | + | TSW | 09/00 ▸ 03/02 | 52479100 | **732348** | 628 377,5 | ALM |
| 2.6 i V6 24V JF35 | E | 2597 | Y26SE | M | - | TSW | 09/00 ▸ 03/02 | 52479099 | **732347** | 628 377,5 | ALM |
| 2.6 i V6 24V JF35 | E | 2597 | Y26SE | A | + | TSW | 09/00 ▸ 03/02 | 52479100 | **732348** | 628 377,5 | ALM |
| 2.6 i V6 24V | E | 2597 | Y26SE | A | - | TSW | 09/00 ▸ 03/02 | 52479099 | **732347** | 628 377,5 | ALM |
| 1.7 TD JF19 ; JF68 | D | 1686 | X17DT | M | + | | 10/95 ▸ 07/96 | 52479093 | **732349** | 500 348 | ALB |
| 1.7 TD JF19 ; JF68 | D | 1686 | X17DT | M | + | | 10/95 ▸ 07/96 | 52479103 | **731846** | 500 348 | ALB |
| 1.7 TD JF19 ; JF68 | D | 1686 | X17DT | M | - | | 10/95 ▸ 07/96 | 52479102 | | 500 348 | ALB |
| 2.0 DTI 16V | D | 1995 | X20DTH | M | +/- | | 09/97 ▸ 03/99 | 52479093 | **732349** | 500 348 | ALB |
| 2.0 Di 16V JF35 ; JF68 ; JF19 | D | 1995 | X20DTL | M | + | TSW | 08/96 ▸ 01/99 | 52479098 | **732347** | 628 377,5 | ALM |
| 2.0 Di 16V JF35 ; JF68 ; JF19 | D | 1995 | X20DTL | M | - | TSW | 08/96 ▸ 01/99 | 52479099 | **732347** | 628 377,5 | ALM |
| 2.2 DTI 16V | D | 2171 | Y22DTR | M | +/- | | 09/00 ▸ 03/02 | 52492109 | | 628 377,5 | ALM |

## VECTRA (2002>2005)

| | | | | | | | | | | | |
|---|---|---|---|---|---|---|---|---|---|---|---|
| 1.8 i LPG 16V | G | 1796 | Z18XE-GPL | M | +/- | | 04/02 ▸ 09/05 | 24418338 | **732879** | 649,4 403,3 | ALM |
| 1.6 i 16V | E | 1598 | Z16XEP | M | | | 04/02 ▸ 09/05 | 13217130 | **734982** | 650 403 | ALM |
| 1.8 i 16V | E | 1796 | Z18XE | M | +/- | | 04/02 ▸ 09/05 | 24418338 | **732879** | 649,4 403,3 | ALM |
| 1.8 i 16V | E | 1796 | Z18XER | M | | | 04/02 ▸ 09/05 | 24418340 | **734981** | 650 403 | ALM |
| 1.8 i 16V | E | 1796 | Z18XEL | M | | | 04/02 ▸ 09/05 | 24418338 | **732879** | 649,4 403,3 | ALM |
| 2.0 i Turbo 16V | E | 1998 | Z20NET | M | +/- | | 05/03 ▸ 09/05 | 24418341 | **732876** | 650 414,5 | ALB |
| 2.2 DGI 16V,2.2 i 16V | E | 2198 | Z22SE,Z22YH | M | + | | 04/02 ▸ 09/05 | 24418343 | **732877** | 650 414,5 | ALB |
| 2.2 DGI 16V,2.2 i 16V | E | 2198 | Z22SE,Z22YH | M | - | | 04/02 ▸ 09/05 | 24418341 | **732876** | 650 414,5 | ALB |
| 2.2 i 16V | E | 2198 | Z22YH | A | +/- | | 10/03 ▸ 09/05 | 24418344 | **732878** | 650 414,5 | ALB |
| 2.2 i 16V | E | 2198 | Z22SE | A | + | | 04/02 ▸ 09/05 | 24418344 | **732878** | 650 414,5 | ALB |
| 2.2 i 16V | E | 2198 | Z22YH | A | + | | 10/03 ▸ 09/05 | 24418343 | **732877** | 650 414,5 | ALB |

Radiator Radiateur Motorkühler Radiatore di raffreddamento Radiator Radyatör Radiador Радиатор vízhűtő Vodní chladič Radiator Ψυγείο



• **New** Nouveau **Nuevo** Novo **Nuovo** Nieuw **Neu** Nowość **Yeni** Новый Νέο **Nový**

# VAUXHALL (.../...)

## VECTRA (2002>2005) (.../...)

| Type Ctr. | | CC | | AC | | | OE | Valeo | DIM. | TECH |
|---|---|---|---|---|---|---|---|---|---|---|
| 2.2 i 16V | E | 2198 | Z22YH | A | - | | 10/03 ▸ 09/05 | 24418341 | **732876** | 650 414,5 ALB |
| 3.2 i V6 24V | E | 3175 | Z32SE | M | +/- | | 04/02 ▸ 09/05 | 24418341 | **732876** | 650 414,5 ALB |
| 3.2 i V6 24V | E | 3175 | Z32SE | A | +/- | | 04/02 ▸ 09/05 | 24418344 | **732878** | 650 414,5 ALB |
| 1.9 CDTI,1.9 CDTI 16V | D | 1910 | Z19DT,Z19DTH | M | + | | 04/04 ▸ 09/05 | 24418345 | **734339** | 649 414,5 ALB |
| 1.9 CDTI | D | 1910 | Z19DT | M | + | | 04/04 ▸ 09/05 | 13196477 | **•735085** | 649 414,5 ALB |
| 1.9 CDTI 16V | D | 1910 | Z19DTH | M | - | | 04/04 ▸ 09/05 | 13196477 | **•735085** | 649 414,5 ALB |
| 1.9 CDTI 16V | D | 1910 | Z19DTH | A | + | | 04/04 ▸ 09/05 | 13156387 | **734345** | 649 414,5 ALB |
| 2.0 DTI 16V | D | 1995 | Y20DTH | M | + | | 04/02 ▸ 09/05 | 24418343 | **732877** | 650 414,5 ALB |
| 2.0 DTI 16V | D | 1995 | Y20DTH | M | - | | 04/02 ▸ 09/05 | 24418341 | **732876** | 650 414,5 ALB |
| 2.2 DTI 16V | D | 2171 | Y22DTR | M | + | | 04/02 ▸ 09/05 | 24418343 | **732877** | 650 414,5 ALB |
| 2.2 DTI 16V | D | 2171 | Y22DTR | M | - | | 04/02 ▸ 09/05 | 24418341 | **732876** | 650 414,5 ALB |
| 2.2 DTI 16V | D | 2171 | Y22DTR | A | +/- | | 04/02 ▸ 09/05 | 24418344 | **732878** | 650 414,5 ALB |
| 3.0 CDTi V6 24V | D | 2958 | Y30DT | M | + | | 07/03 ▸ 09/05 | 13108569 | **734302** | 649 414,5 ALB |
| 3.0 CDTi V6 24V | D | 2958 | Y30DT | A | + | | 07/03 ▸ 09/05 | 13108569 | **734302** | 649 414,5 ALB |

## VECTRA (2005>)

| | | | | | | | | | | |
|---|---|---|---|---|---|---|---|---|---|---|
| 1.6 i 16V | E | 1598 | Z16XE | M | +/- | | 10/05 ▸ 02/09 | 24418338 | **732879** | 649,4 403,3 ALM |
| 1.8 i 16V | E | 1796 | Z18XE | M | +/- | | 10/05 ▸ 02/09 | 24418338 | **732879** | 649,4 403,3 ALM |
| 2.0 i Turbo 16V | E | 1998 | Z20NET | M | +/- | | 10/05 ▸ 02/09 | 24418341 | **732876** | 650 414,5 ALB |
| 2.2 DGI 16V | E | 2198 | Z22YH | M | + | | 10/05 ▸ 02/09 | 24418343 | **732877** | 650 414,5 ALB |
| 2.2 DGI 16V | E | 2198 | Z22YH | M | - | | 10/05 ▸ 02/09 | 24418341 | **732876** | 650 414,5 ALB |
| 2.2 DGI 16V | E | 2198 | Z22YH | A | +/- | | 10/05 ▸ 02/09 | 24418344 | **732878** | 650 414,5 ALB |
| 2.8 i V6 Turbo 24V | E | 2792 | Z28NEL,Z28NET | M | + | TSW | 10/05 ▸ 08/06 | 12805057 | **•735083** | 650 414,5 ALB |
| 2.8 i V6 Turbo 24V | E | 2792 | Z28NET | M | | TSW | 09/06 ▸ 02/09 | 12805057 | **•735083** | 650 414,5 ALB |
| 2.8 i V6 Turbo 24V | E | 2792 | Z28NEL | A | + | TSW | 10/05 ▸ 08/06 | 12805057 | **•735083** | 650 414,5 ALB |
| 2.8 i V6 Turbo 24V | E | 2792 | Z28NET | A | | TSW | 09/06 ▸ 02/09 | 12805057 | **•735083** | 650 414,5 ALB |
| 1.9 CDTI | D | 1910 | Z19DTL | M | +/- | | 10/05 ▸ 02/09 | 13196477 | **•735085** | 649 414,5 ALB |
| 1.9 CDTI 16V | D | 1910 | Z19DTH | M | + | | 10/05 ▸ 02/09 | 24418345 | **734339** | 649 414,5 ALB |
| 1.9 CDTI | D | 1910 | Z19DT | M | + | | 10/05 ▸ 02/09 | 13196477 | **•735085** | 649 414,5 ALB |
| 1.9 CDTI 16V | D | 1910 | Z19DTH | M | - | | 10/05 ▸ 02/09 | 13196477 | **•735085** | 649 414,5 ALB |
| 1.9 CDTI 16V | D | 1910 | Z19DTH | A | +/- | | 10/05 ▸ 02/09 | 13156387 | **734345** | 649 414,5 ALB |
| 3.0 CDTI V6 24V | D | 2958 | Z30DT | M | + | | 10/05 ▸ 02/09 | 13108569 | **734302** | 649 414,5 ALB |
| 3.0 CDTI V6 24V | D | 2958 | Z30DT | A | + | | 10/05 ▸ 02/09 | 13108569 | **734302** | 649 414,5 ALB |

## ZAFIRA (99>2003)

| | | | | | | | | | | |
|---|---|---|---|---|---|---|---|---|---|---|
| 1.6 i 16V F75L | E | 1598 | X16XEL | M | - | | 05/99 ▸ 06/03 | 9202493 | **732795** | 540 377,5 ALM |
| 1.6 i 16V F75L ▸ Y2284093, Y5291300 | E | 1598 | X16XEL | M | - | | 05/99 ▸ 2000 | 90570726 | **732724** | 540 377,5 ALM |
| 1.6 i 16V F75L ▸ Y6129876, Y2279349 | E | 1598 | X16XEL | M | + | | 05/99 ▸ 2000 | 9119482 | **732549** | 610 377,5 ALM |
| 1.6 i 16V F75L ▸ Y8144150 | E | 1598 | X16XEL | M | + | | 05/99 ▸ 2000 | 93177121 | **732549** | 610 377,5 ALM |
| 1.6 i 16V F75L ▸ Y8144150, Y5291300 | E | 1598 | X16XEL | M | + | | 05/99 ▸ | 9193265 | **732729** | 610 377,5 ALM |
| 1.8 i 16V F752 | E | 1796 | X18XE1 | M | + | | 05/99 ▸ | 9193267 | **732548** | 610 377,5 ALM |
| 1.8 i 16V F752 | E | 1796 | X18XE1,Z18XE | M | - | | 05/99 ▸ 06/03 | 9202493 | **732795** | 540 377,5 ALM |
| 1.8 i 16V F752 | E | 1796 | X18XE1 | A | +/- | | 05/99 ▸ 09/00 | 90570725 | **732724** | 540 377,5 ALM |
| 1.8 i 16V F752 | E | 1796 | X18XE1 | A | - | | 05/99 ▸ 09/00 | 9202493 | **732795** | 540 377,5 ALM |
| 1.8 i 16V F752 ▸ Y2281474 | E | 1796 | X18XE1 | A | + | | 05/99 ▸ 2000 | 93177121 | **732549** | 610 377,5 ALM |
| 1.8 i 16V F752 ▸ Y2281474, Y6129876 | E | 1796 | X18XE1 | A | + | | 05/99 ▸ 2000 | 9119482 | **732549** | 610 377,5 ALM |
| 1.8 i 16V F752 ▸ Y5291300, Y2279349 | E | 1796 | X18XE1 | M | + | | 05/99 ▸ 2000 | 9119482 | **732549** | 610 377,5 ALM |
| 1.8 i 16V F752 ▸ Y5291300, Y6129876 | E | 1796 | X18XE1 | M | + | | 05/99 ▸ | 9193265 | **732729** | 610 377,5 ALM |
| 1.8 i 16V F752 ▸ Y5291300, Y8144150 | E | 1796 | X18XE1 | A | - | | 05/99 ▸ 2000 | 90570726 | **732724** | 540 377,5 ALM |
| 1.8 i 16V F752 ▸ Y6129876, Y5291300 | E | 1796 | X18XE1 | A | + | | 05/99 ▸ | 9193265 | **732729** | 610 377,5 ALM |
| 1.8 i 16V F752 ▸ Y6132349, Y5291300 | E | 1796 | X18XE1 | M | - | | 05/99 ▸ 2000 | 90570726 | **732724** | 540 377,5 ALM |
| 1.8 i 16V F752 ▸ Y8144150 | E | 1796 | X18XE1,Z18XE | M | + | | 05/99 ▸ 06/03 | 93177121 | **732549** | 610 377,5 ALM |
| 2.0 i Turbo 16V | E | 1998 | Z20LET | M | + | | 10/01 ▸ 06/03 | 9201018 | **732548** | 610 377,5 ALM |
| 2.2 i 16V | E | 2198 | Z22SE | M | - | | 08/00 ▸ 06/03 | 93177121 | **732549** | 610 377,5 ALM |
| 2.0 Di 16V F75L | D | 1995 | X20DTL | M | + | | 05/99 ▸ 06/03 | 9192578 | **732550** | 610 377 CBS |
| 2.0 Di 16V F75L ▸ Y2276807 | D | 1995 | X20DTL | M | - | | > ▸ | 9193267 | **732548** | 610 377,5 ALM |
| 2.0 Di 16V F75L | D | 1995 | X20DTL | M | | | 05/99 ▸ 06/03 | 9201018 | **732548** | 610 377,5 ALM |

| Type Ctr. | | CC | | AC | | 2+3 | OE | Valeo | DIM. | TECH |
|---|---|---|---|---|---|---|---|---|---|---|
| **VAUXHALL (.../...)** | | | | | | | | | | |
| **ZAFIRA (99>2003) (.../...)** | | | | | | | | | | |
| 2.0 Di 16V F75L | D | 1995 | X20DTL | A | | 05/99 ▸ 06/03 | 9192578 | **732550** | 610 377 | CBS |
| 2.0 Di 16V F75L | D | 1995 | X20DTL | M | - | 05/99 ▸ | 9119483 | **732548** | 610 377,5 | ALM |
| **ZAFIRA (2003>)** | | | | | | | | | | |
| 1.6 i GNV 16V QG75I ; QM75I | G | 1598 | Z16YNG | M | + | 07/03 ▸ 06/05 | 93177121 | **732549** | 610 377,5 | ALM |
| 1.6 i GNV 16V QG75I ; QM75I | G | 1598 | Z16YNG | M | - | 07/03 ▸ 06/05 | 9202493 | **732795** | 540 377,5 | ALM |
| 1.6 i 16V QG75I ; QM75I | E | 1598 | Z16XE | M | + | 07/03 ▸ 06/05 | 93177121 | **732549** | 610 377,5 | ALM |
| 1.6 i 16V QG75I ; QM75I | E | 1598 | Z16XE | M | - | 07/03 ▸ 06/05 | 9202493 | **732795** | 540 377,5 | ALM |
| 1.8 i 16V QD75K ; QX75K | E | 1796 | Z18XE | M | + | 07/03 ▸ 06/05 | 93177121 | **732549** | 610 377,5 | ALM |
| 1.8 i 16V QD75K ; QX75K | E | 1796 | Z18XE | M | - | 07/03 ▸ 06/05 | 9202493 | **732795** | 540 377,5 | ALM |
| 1.8 i 16V QX75K | E | 1796 | Z18XE | A | +/- | 07/03 ▸ 06/05 | 90570725 | **732724** | 540 377,5 | ALM |
| 1.8 i 16V QX75K | E | 1796 | Z18XE | A | + | 07/03 ▸ 06/05 | 93177121 | **732549** | 610 377,5 | ALM |
| 1.8 i 16V QX75K | E | 1796 | Z18XE | A | - | 07/03 ▸ 06/05 | 9202493 | **732795** | 540 377,5 | ALM |
| 2.0 i Turbo 16V F75L | E | 1998 | Z20LET | M | | 07/03 ▸ 06/05 | 9201018 | **732548** | 610 377,5 | ALM |
| 2.2 i 16V QD75P | E | 2198 | Z22SE | M | + | 07/03 ▸ 06/05 | 93177121 | **732549** | 610 377,5 | ALM |
| 2.2 i 16V QD75P | E | 2198 | Z22SE | A | + | 07/03 ▸ 06/05 | 93177121 | **732549** | 610 377,5 | ALM |
| 2.2 DTI 16V QD75P ; QX75P | D | 2171 | Y22DTR | M | +/- | 07/03 ▸ | 9192607 | **734388** | 600 368 | |
| 2.2 DTI 16V QD75P ; QX75P | D | 2171 | Y22DTR | M | + | 07/03 ▸ | 9201018 | **732548** | 610 377,5 | ALM |
| **ZAFIRA II (2005>2007)** | | | | | | | | | | |
| 1.6 i GNV 16V | G | 1598 | Z16YNG | M | | 01/06 ▸ 07/08 | 13145210 | **734381** | 600 370 | |
| 1.6 i Twinport 16V | E | 1598 | Z16XEP | M | +/- | 07/05 ▸ 02/09 | 13145211 | **734382** | 600 370 | ALB |
| 1.8 i 16V | E | 1796 | Z18XER | M | +/- | 09/05 ▸ 02/09 | 13145211 | **734382** | 600 370 | ALB |
| 2.0 i Turbo 16V | E | 1998 | Z20LER | M | +/- | 07/05 ▸ 02/09 | 13145212 | **734432** | 600 370 | ALB |
| 2.2 i 16V | E | 2198 | Z22YH | M | | 07/05 ▸ 02/09 | 13145212 | **734432** | 600 370 | ALB |
| 1.7 CDTI | D | 1686 | A17DTJ/F | M | +/- | 01/08 ▸ 02/09 | 13143570 | **734380** | 600 370 | |
| 1.7 CDTI | D | 1686 | Z17DTJ/F | M | | 01/08 ▸ 02/09 | 13143570 | **734380** | 600 370 | |
| 1.9 CDTI | D | 1910 | Z19DT,Z19DTL | M | | > ▸ 02/09 | 13143570 | **734380** | 600 370 | |
| **ZAFIRA II (2007>)** | | | | | | | | | | |
| 1.6 i CNG 16V | F | 1598 | Z16YNG | M | | 02/09 ▸ | 13145210 | **734381** | 600 370 | |
| 1.6 i 16V | E | 1598 | Z16XER | M | | 02/09 ▸ | 13145211 | **734382** | 600 370 | ALB |
| 1.8 i VVT 16V | E | 1796 | Z18XER | M | | 02/09 ▸ | 13145211 | **734382** | 600 370 | ALB |
| 2.0 i 16V | E | 1998 | Z20LER | M | | 02/09 ▸ | 13145212 | **734432** | 600 370 | ALB |
| 2.2 i 16V | E | 2190 | Z22YH | M | | 02/09 ▸ | 13145212 | **734432** | 600 370 | ALB |
| 1.9 CDTI 16V | D | 1910 | Z19DT/F | M | | 02/09 ▸ | 13143570 | **734380** | 600 370 | |
| **VAUXHALL** | | | | | | | | | | |
| **ARENA** | | | | | | | | | | |
| 1.9 D | D | 1870 | F8Q.6.06 | M | | TSW | 03/98 ▸ 08/01 | 9108916 | **732940** | 650 395 | CBS |
| 2.5 D TB2G ; THBG ; TB1G | D | 2499 | S8U.7.58,S8U.7.80,S8U.7.82 | M | | TSW | 03/98 ▸ 08/01 | 9109893 | **730944** | 655 398 | CBS |
| **COMBO (93>2001)** | | | | | | | | | | |
| 1.4 i | E | 1389 | C14NZ | M | + | TSW | 10/93 ▸ 09/01 | 52459322 | **734271** | 680 273 | ALB |
| 1.4 i | E | 1389 | C14NZ | M | + | TSW | 10/93 ▸ | 52459323 | **732032** | 680 273 | ALM |
| 1.4 i | E | 1389 | C14NZ | M | - | TSW | 10/93 ▸ 09/01 | 90410048 | **731178** | 530 285 | ALM |
| 1.4 i | E | 1389 | C14NZ | M | - | TSW | 10/93 ▸ | 90410047 | **731013** | 530 285 | ALM |
| 1.7 D | D | 1686 | X17D | M | - | TSW | 10/93 ▸ 09/01 | 90410049 | **731179** | 650 266 | ALB |
| **COMBO (2001>2004)** | | | | | | | | | | |
| 1.6 i GPL | G | 1598 | Z16SE | M | - | | 10/01 ▸ 06/04 | 9201956 | **732826** | 540 377,5 | ALM |
| 1.6 i | E | 1598 | Z16SE/E4 | M | - | | 10/01 ▸ 06/04 | 9201956 | **732826** | 540 377,5 | ALM |
| 1.7 DTi 16V,1.7 Di 16V | D | 1686 | Y17DT,Y17DTL | M | +/- | | 10/01 ▸ 06/04 | 9196694 | **732824** | 628 377,5 | ALM |
| **COMBO (2004>)** | | | | | | | | | | |
| 1.4 i GPL Twinport 16V | G | 1364 | A14XEL | M | +/- | | 07/04 ▸ | 9201955 | **732825** | 540 377,5 | ALM |
| 1.6 i CNG | G | 1598 | Z16YNG | M | - | | 04/05 ▸ | 9201956 | **732826** | 540 377,5 | ALM |
| 1.4 i Twinport 16V | E | 1364 | Z14XEP | M | +/- | | 07/04 ▸ | 9201955 | **732825** | 540 377,5 | ALM |
| 1.3 CDTi 16V | D | 1248 | Y13DT,Z13DT,Z13DTJ | M | + | | 07/04 ▸ | 93177424 | **734464** | 600 350 | ALM |
| 1.3 CDTi 16V | D | 1248 | Y13DT,Z13DT,Z13DTJ | M | - | | 07/04 ▸ | 93177593 | **734464** | 600 350 | ALM |
| 1.7 CDTi 16V | D | 1686 | Z17DTH | M | + | | 07/04 ▸ | 93177424 | **734464** | 600 350 | ALM |
| 1.7 CDTi 16V | D | 1686 | Z17DTH | M | - | | 07/04 ▸ | 93177593 | **734464** | 600 350 | ALM |
| **MOVANO** | | | | | | | | | | |
| 1.9 Dti FD0P ; JD ; JD0P FD | D | 1870 | F9Q.7.72 | M | + | TSW | > ▸ 10/06 | 93179354 | **732918** | 730 414,5 | ALM |
| 1.9 Dti FD0L ; JD ; JD0L FD | D | 1870 | F9Q.7.70,F9Q.7.72 | M | + | TSW | 08/00 ▸ 10/06 | 9161437 | **732050** | 730 396 | CBS |

Radiator Ψυγείο Vodní chladič Радиатор vízhűtő Radiador Radiator Radyatör Radiator Radiatore di raffreddamento Motorkühler Radiateur Radiator



• **New** Nouveau **Nuevo** Novo **Nuovo** Nieuw **Neu** Nowość **Yeni** Новый Νέο **Nový**

| Type Ctr. | | CC | | AC | | | OE | Valeo | DIM. | TECH |
|---|---|---|---|---|---|---|---|---|---|---|

# VAUXHALL (.../...)

## MOVANO (.../...)

| | | | | | | | | | | | | |
|---|---|---|---|---|---|---|---|---|---|---|---|---|
| 1.9 DTi | FD0P ; JD0P | D | 1870 | F9Q.7.74 | M | + | TSW | 10/05 ▸ 10/06 | 93179729 | **732919** | 730 414,5 | ALB |
| 1.9 Dti | FD0L ; FD0P ; JD JD0L ; JD0P ; FD | D | 1870 | F9Q.7.70,F9Q.7.72 | M | - | TSW | 08/00 ▸ 10/06 | 9111216 | **732798** | 728 414,5 | ALB |
| 1.9 DTi | FD0P ; JD0P | D | 1870 | F9Q.7.74 | M | - | TSW | 10/05 ▸ 10/06 | 93179722 | **732917** | 730 414,5 | ALM |
| 2.2 Dti 16V | FD ; JD ; UD ; ED | D | 2188 | G9T.7.20,G9T.7.22 | M | +/- | TSW | 09/00 ▸ 09/03 | 9111216 | **732798** | 728 414,5 | ALB |
| 2.2 DTi 16V | FD0N ; JD0N | D | 2188 | G9T.7.50 | M | + | TSW | 10/03 ▸ 10/05 | 93179729 | **732919** | 730 414,5 | ALB |
| 2.2 DTi 16V | FD0N ; JD0N | D | 2188 | G9T.7.50 | M | - | TSW | 10/03 ▸ 10/05 | 93179722 | **732917** | 730 414,5 | ALM |
| 2.2 DTi 16V | ED0N ; FD0G ; FD0N HD0G ; HD0N ; JD0G ; JD0N ; UD0G ; UD0N UD4G ; UD4N ; ED0G | D | 2188 | G9T.7.20,G9T.7.22 | M | | TSW | 10/03 ▸ 10/06 | 9111216 | **732798** | 728 414,5 | ALB |
| 2.5 Dti 16V | FD0M ; HD0M ; JD0M UD0M ; UD4M ; ED0M | D | 2464 | G9U.7.20 | M | + | TSW | 10/01 ▸ 09/03 | 9161437 | **732050** | 730 396 | CBS |
| 2.5 DTi 16V | ED0U ; FD0M ; FD0U HD0U ; JD0M ; JD0U ; UD0M ; UD0U ; UD4U ED0M | D | 2464 | G9U.7.20,G9U.7.24 | M | + | TSW | 01/03 ▸ 10/06 | 93179354 | **732918** | 730 414,5 | ALM |
| 2.5 DTi 16V | FD0V ; JD0V ; UD0V ED0V | D | 2464 | G9U.7.54 | M | + | TSW | 10/03 ▸ 10/06 | 93179729 | **732919** | 730 414,5 | ALB |
| 2.5 DTi 16V | ED0V ; FD0U ; FD0V HD0U ; UD0U ; UD0V ; ED0U | D | 2464 | G9U.7.54 | M | + | TSW | 10/03 ▸ 10/06 | 93179741 | **732919** | 730 414,5 | ALB |
| 2.5 DTi 16V | ED0U ; FD0M ; FD0U HD0M ; HD0U ; JD0M ; JD0U ; UD0M ; UD0U UD4M ; UD4U ; ED0M | D | 2464 | G9U.7.20,G9U.7.24 | M | - | TSW | 10/01 ▸ 10/06 | 9111216 | **732798** | 728 414,5 | ALB |
| 2.5 DTi 16V | ED0V ; FD0U ; FD0V HD0U ; JD0V ; UD0U ; UD0V ; UD4V ; ED0U | D | 2464 | G9U.7.54 | M | - | TSW | 10/03 ▸ 10/06 | 93179729 | **732919** | 730 414,5 | ALB |
| 2.5 DTi 16V | UD4U | D | 2464 | G9U.7.54 | M | | TSW | 10/03 ▸ 10/06 | 93179729 | **732919** | 730 414,5 | ALB |
| 2.5 CDTi 16V | JD | D | 2464 | G9U.7.20 | A | +/- | TSW | 10/03 ▸ | 9111216 | **732798** | 728 414,5 | ALB |
| 2.8 Dti | FD0C ; JD0F ; UD0C ED0C | D | 2800 | S9W.7.00,S9W.7.02 | M | + | TSW | 10/98 ▸ 10/01 | 9161437 | **732050** | 730 396 | CBS |
| 2.8 Dti | FD0C ; JD0F ; UD0C ED0C | D | 2800 | S9W.7.00,S9W.7.02 | M | - | TSW | 10/98 ▸ 03/00 | 9161437 | **732050** | 730 396 | CBS |
| 2.8 Dti | FD0C ; JD0F ; UD0C ED0C | D | 2800 | S9W.7.00,S9W.7.02 | M | - | TSW | 03/00 ▸ 10/01 | 9111216 | **732798** | 728 414,5 | ALB |
| 3.0 CDTi 16V | FD0S ; HD0S ; JD0T UD0S ; ED0S | D | 2953 | ZD3.2.00,ZD3.2.02 | M | + | TSW | 10/03 ▸ 01/06 | 93179741 | **732919** | 730 414,5 | ALB |
| 3.0 CDTi 16V | FD0S ; HD0S ; JD0T UD0S ; ED0S | D | 2953 | ZD3.2.00,ZD3.2.02 | M | - | TSW | 10/03 ▸ 01/06 | 93179729 | **732919** | 730 414,5 | ALB |

## MOVANO (2006>)

| | | | | | | | | | | | | |
|---|---|---|---|---|---|---|---|---|---|---|---|---|
| 2.5 CDTi 16V | ED0Y ; FD01 ; FD0Y HD01 ; HD0Y ; JD01 ; JD0Y ; UD0Y ; UD01 ED01 | D | 2464 | G9U.6.50 | M | + | TSW | 10/06 ▸ | 93179741 | **732919** | 730 414,5 | ALB |
| 2.5 CDTi 16V | FD02 ; HD02 ; UD02 ED02 | D | 2464 | G9U.6.50 | M | + | TSW | 10/06 ▸ | 93179729 | **732919** | 730 414,5 | ALB |
| 2.5 CDTi 16V | FD02 ; HD02 ; UD02 ED02 | D | 2464 | G9U.6.50 | M | - | TSW | 10/06 ▸ | 93179722 | **732917** | 730 414,5 | ALM |
| 2.5 CDTi 16V | ED0Y ; FD01 ; FD0Y HD01 ; HD0Y ; JD01 ; JD0Y ; UD0Y ; UD01 ED01 | D | 2464 | G9U.6.50 | M | - | TSW | 10/06 ▸ | 93179729 | **732919** | 730 414,5 | ALB |

## RASCAL

| | | | | | | | | | | | | |
|---|---|---|---|---|---|---|---|---|---|---|---|---|
| 1.0 | 99170 ; 99180 | E | 970 | F10A | M | - | | 06/90 ▸ 07/93 | 91123003 | **731486** | 240 495 | CBS |

## VIVARO (2001>2006)

| | | | | | | | | | | | | |
|---|---|---|---|---|---|---|---|---|---|---|---|---|
| 2.0 i 16V | 1F05M ; 1G05M | E | 1998 | F4R.7.20 | M | +/- | | 08/01 ▸ 06/06 | 91166001 | **732846** | 560 469 | ALB |
| 1.9 DI,1.9 DTI | 1F05L ; 1G05L | D | 1870 | F9Q.7.60,F9Q.7.62 | M | + | | 08/01 ▸ 06/06 | 91166001 | **732846** | 560 469 | ALB |
| 1.9 DI,1.9 DTI | 1F05L ; 1G05L | D | 1870 | F9Q.7.60,F9Q.7.62 | M | - | | 08/01 ▸ 06/06 | 91166000 | **732853** | 561 470 | ALM |
| 2.5 DTI | 1F06S ; 1G03S 1G05S ; 1F05/S | D | 2464 | G9U.7.30 | M | + | | 05/03 ▸ 06/06 | 93852186 | **732911** | 780 479 | ALB |
| 2.5 DTI | 1F06S ; 1G03S 1G05S ; 1F05/S | D | 2464 | G9U.7.30 | M | - | | 05/03 ▸ 06/06 | 93852185 | **732902** | 781,4 470 | ALM |
| 2.5 DTI | 1F06S ; 1G03S 1G05S ; 1F05/S | D | 2464 | G9U.7.30 | M | - | | 05/03 ▸ 2003 | 91168177 | **732902** | 781,4 470 | ALM |

## VIVARO (2006>)

| | | | | | | | | | | | | |
|---|---|---|---|---|---|---|---|---|---|---|---|---|
| 2.0 CDTi 16V | | D | 1995 | M9R.7.80 | M | +/- | | 07/06 ▸ | 93854164 | **734946** | 558 462,2 | ALB |

# VAUXHALL (.../...)

## VIVARO (2006>) (.../...)

| | | | | | | | | | | | | |
|---|---|---|---|---|---|---|---|---|---|---|---|---|
| 2.5 CDTi 16V | | D | 2464 | G9U.6.30 | M | +/- | | 07/06 ▸ | 93857125 | •734931 | 462 780 | ALB |

# VOLKSWAGEN

## BORA

| | | | | | | | | | | | | |
|---|---|---|---|---|---|---|---|---|---|---|---|---|
| 1.4 i 16V | 1J2/0/1/2 ; 1J6/1/2 | E | 1390 | AHW,AXP,BCA | M | +/- | TSW | 05/00 ▸ 05/05 | 1J0121253AD | 731606 | 414,5 650 | ALM |
| 1.4 i 16V | 1J2/0/1/2 ; 1J6/0/1/2 | E | 1390 | AHW,AKQ,APE,AXP,BCA | M | + | TSW | 09/98 ▸ 05/05 | 1J0121253AD | 731606 | 414,5 650 | ALM |
| 1.4 i 16V | 1J2/0/1/2 ; 1J6/0/1/2 | E | 1390 | AHW,AKQ,APE,AXP,BCA | M | - | TSW | 09/98 ▸ | 1J0121253G | •736083 | 430 414 | ALM |
| 1.4 i 16V | 1J2/0/1/2 ; 1J6/0/1/2 | E | 1390 | AHW,AKQ,APE,AXP,BCA | M | - | TSW | 09/98 ▸ | 1J0121253G | 731607 | 430 414 | ALM |
| 1.6 FSI 16V,1.6 i 1.6 i 16V | 1J2/0/1/2/3/5 ; 1J6/0/1/2/3 | E | 1595 | AEH,AKL,APF,ATN,AUS,AZD,BAD BCB | M | +/- | TSW | 09/98 ▸ 05/05 | 1J0121253AD | 731606 | 414,5 650 | ALM |
| 1.6 i | 1J2/0/1/2/3 ; 1J6/0/1/2/3/5 | E | 1595 | AEH,AKL | M | +/- | TSW | 05/99 ▸ | 1J0121253N | 732175 | 650 414,5 | ALM |
| 1.6 FSI 16V,1.6 i 1.6 i 16V | 1J2/0/1/2/3/5 ; 1J6/0/1/2/3/5 | E | 1595 | AEH,AKL,APF,ATN,AUS,AZD,BAD BCB,BFQ | M | + | TSW | 09/98 ▸ 05/05 | 1J0121253AD | 731606 | 414,5 650 | ALM |
| 1.6 i,1.6 i 16V | 1J2/0/2/5 ; 1J6/2/5 | E | 1595 | AKL,APF,ATN | M | + | TSW | 09/98 ▸ | 1J0121253N | 732175 | 650 414,5 | ALM |
| 1.6 FSI 16V,1.6 i 1.6 i 16V | 1J2/0/1/2/3/5 ; 1J6/0/1/2/3/5 | E | 1595 | AKL,APF,ATN,AUS,AZD,BAD,BCB BFQ | M | - | TSW | 09/98 ▸ | 1J0121253N | 732175 | 650 414,5 | ALM |
| 1.6 FSI 16V,1.6 i 1.6 i 16V | 1J2/0/1/2/3/5 ; 1J6/0/1/2/3/5 | E | 1595 | AEH,AKL,BAD,BCB,BFQ | M | | TSW | 09/98 ▸ | 1J0121253N | 732175 | 650 414,5 | ALM |
| 1.6 i | 1J2/0/1/2/3/5 ; 1J6/0/1/2/3/5 | E | 1595 | AEH,AKL,APF,AVU | A | +/- | TSW | 09/98 ▸ 05/05 | 1J0121253AD | 731606 | 414,5 650 | ALM |
| 1.6 i | 1J2/0/1/2/3/5 ; 1J6/0/1/2/3/5 | E | 1595 | AEH | A | +/- | TSW | 09/98 ▸ | 1J0121253N | 732175 | 650 414,5 | ALM |
| 1.6 i | 1J2/0/1/2/3 ; 1J6/0/1/2/3 | E | 1595 | BFQ | A | + | TSW | 05/02 ▸ 05/05 | 1J0121253AD | 731606 | 414,5 650 | ALM |
| 1.6 i | 1J2/0/1/2/3/5 ; 1J6/0/1/2/3/5 | E | 1595 | APF,AVU,BFQ | A | - | TSW | 05/99 ▸ | 1J0121253N | 732175 | 650 414,5 | ALM |
| 1.6 i | 1J2/0/1/2/3/5 ; 1J6/0/1/2/3/5 | E | 1595 | AKL | A | | TSW | 09/98 ▸ | 1J0121253N | 732175 | 650 414,5 | ALM |
| 1.8 i 20V,1.8 i Turbo 20V | 1J2/0/1/2/3/5 ; 1J6/0/1/2/3/5 | E | 1781 | AGN,AGU,AUM | M | +/- | TSW | 02/99 ▸ 05/05 | 1J0121253AD | 731606 | 414,5 650 | ALM |
| 1.8 i 20V | 1J2/0/1/2/3/5 ; 1J6/0/1/2/3 | E | 1781 | AGN | M | +/- | TSW | 02/99 ▸ | 1J0121253N | 732175 | 650 414,5 | ALM |
| 1.8 i 20V | 1J6/2/5 | E | 1781 | AGN | M | + | TSW | 05/99 ▸ | 1J0121253N | 732175 | 650 414,5 | ALM |
| 1.8 i 20V | 1J22 | E | 1781 | AGN | M | - | TSW | 02/99 ▸ | 1J0121253N | 732175 | 650 414,5 | ALM |
| 1.8 i 20V | 1J2/2/5 ; 1J6/2/5 | E | 1781 | AGN | M | | TSW | 02/99 ▸ 05/00 | 1J0121253N | 732175 | 650 414,5 | ALM |
| 1.8 i Turbo 20V | 1J2/2/3 ; 1J6/2/3 | E | 1781 | AUQ | M | | TSW | 05/02 ▸ 05/05 | 1J0121253AD | 731606 | 414,5 650 | ALM |
| 1.8 i 20V,1.8 i Turbo 20V | 1J2/2/3/5 ; 1J6/2/3 | E | 1781 | AGN,AGU,ARX,AUM | A | +/- | TSW | 02/99 ▸ 05/05 | 1J0121253AD | 731606 | 414,5 650 | ALM |
| 1.8 i 20V | 1J2/0/1/2/3/5 ; 1J6/0/1/2/3/5 | E | 1781 | AGN | A | +/- | TSW | 02/99 ▸ 10/00 | 1J0121253N | 732175 | 650 414,5 | ALM |
| 1.8 i 20V | 1J2/0/1/2/3/5 ; 1J6/0/1/2/3/5 | E | 1781 | AGN | A | | TSW | 02/99 ▸ 10/00 | 1J0121253AD | 731606 | 414,5 650 | ALM |
| 2.0 i | 1J2/0/1/2/3/5 ; 1J6/0/1/2/3 | E | 1984 | APK,AQY,AZH,AZJ | M | +/- | TSW | 09/98 ▸ | 1J0121253N | 732175 | 650 414,5 | ALM |
| 2.0 i | 1J2/0/1/2/3 ; 1J6/0/1/2/3 | E | 1984 | APK,AZH,AZJ | M | +/- | TSW | 04/00 ▸ 05/05 | 1J0121253AD | 731606 | 414,5 650 | ALM |
| 2.0 i | 1J2/0/1/2/3/5 ; 1J6/0/1/2/3/5 | E | 1984 | APK,AQY,AZJ | M | + | TSW | 09/98 ▸ 05/05 | 1J0121253AD | 731606 | 414,5 650 | ALM |
| 2.0 i | 1J2/2 ; 1J6/2/5 | E | 1984 | APK,AQY | M | + | TSW | 09/98 ▸ | 1J0121253N | 732175 | 650 414,5 | ALM |
| 2.0 i | 1J2/5 ; 1J6/0/2/5 | E | 1984 | APK,AQY,AZH | M | - | TSW | 09/98 ▸ | 1J0121253N | 732175 | 650 414,5 | ALM |
| 2.0 i | 1J2/0/1/2/3/5 ; 1J6/0/1/2/3/5 | E | 1984 | APK,AQY,AZJ | M | | TSW | 09/98 ▸ 05/05 | 1J0121253N | 732175 | 650 414,5 | ALM |
| 2.0 i | 1J2/0/1/2/3/5 ; 1J6/0/1/2/3/5 | E | 1984 | APK,AZJ | A | +/- | TSW | 09/98 ▸ 05/05 | 1J0121253AD | 731606 | 414,5 650 | ALM |
| 2.0 i | 1J2/0/1/2/3/5 ; 1J6/0/1/2/3/5 | E | 1984 | APK,AQY,AZH,AZJ | A | +/- | TSW | 09/98 ▸ | 1J0121253N | 732175 | 650 414,5 | ALM |
| 2.0 i | 1J2/1/2 ; 1J6/0/2/3 | E | 1984 | AZJ | A | + | TSW | 05/01 ▸ 05/03 | 1J0121253AD | 731606 | 414,5 650 | ALM |
| 2.0 i | 1J2/0/1/2/3/5 ; 1J6/0/1/2/3/5 | E | 1984 | AQY,AZH | A | | TSW | 09/98 ▸ 05/05 | 1J0121253AD | 731606 | 414,5 650 | ALM |
| 2.3 i V5 20V | 1J2/0/1/2/3/5 ; 1J6/0/1/2/3/5 | E | 2324 | AGZ | M | +/- | TSW | 09/98 ▸ 02/01 | 1J0121253AD | 731606 | 414,5 650 | ALM |
| 2.3 i V5 20V | 1J2/0/1/2/3 ; 1J6/0/1/2/3 | E | 2324 | AQN | M | +/- | TSW | 09/00 ▸ 05/05 | 1J0121253S | 732427 | 648,6 414 | ALB |
| 2.3 i V5 20V | 1J2/0/1/2/3/5 ; 1J6/0/1/2/3/5 | E | 2324 | AGZ | A | +/- | TSW | 09/98 ▸ 02/01 | 1J0121253AD | 731606 | 414,5 650 | ALM |
| 2.3 i V5 20V | 1J2/0/1/2/3 ; 1J6/0/1/2/3 | E | 2324 | AQN | A | +/- | TSW | 09/00 ▸ 05/05 | 1J0121253S | 732427 | 648,6 414 | ALB |
| 2.8 i VR6 24V | 1J2/3/6 ; 1J6/3/6 | E | 2792 | BDE | M | +/- | TSW | 05/01 ▸ 05/03 | 1J0121253S | 732427 | 648,6 414 | ALB |
| 2.8 i VR6 24V | 1J2/3/5/6 ; 1J6/3/5/6 | E | 2792 | AQP,AUE | M | | TSW | 05/99 ▸ 04/01 | 1J0121253S | 732427 | 648,6 414 | ALB |
| 2.8 i VR6 24V | 1J2/3/6 ; 1J6/3/6 | E | 2792 | BDE | A | + | TSW | 05/01 ▸ 05/03 | 1J0121253S | 732427 | 648,6 414 | ALB |
| 2.8 i VR6 24V | 1J2/3/5/6 ; 1J6/3/5 | E | 2792 | AQP,AUE | A | | TSW | 05/99 ▸ 04/01 | 1J0121253S | 732427 | 648,6 414 | ALB |
| 1.9 SDi,1.9 TDi | 1J2/0/1/2/3/5 ; 1J6/0/1/2/3/5 | D | 1896 | AGP,AGR,AHF,AJM,ALH,AQM,ASV ASZ,ATD,AUY,AXR | M | +/- | TSW | 09/98 ▸ 05/05 | 1J0121253AD | 731606 | 414,5 650 | ALM |
| 1.9 SDi,1.9 TDi | 1J2/0/1/2/3/5 ; 1J6/0/1/2/3/5 | D | 1896 | AGP,AGR,AHF,AJM,AQM,ASV,ASZ ATD,AUY,AXR | M | +/- | TSW | 09/98 ▸ | 1J0121253N | 732175 | 650 414,5 | ALM |
| 1.9 TDi | 1J2/2/3 ; 1J6/2/3 | D | 1896 | ARL | M | +/- | TSW | 09/00 ▸ 05/05 | 1J0121253AC | 732867 | 648,6 414,5 | ALB |

Radiator Radiateur Motorkühler Radiatore di raffreddamento Radiator Radyatör Radiator Радиатор vízhűtő Vodní chladič Radiator Ψυγείο



• **New** Nouveau **Nuevo** Novo **Nuovo** Nieuw **Neu** Nowość **Yeni** Новый Νέο **Novy**

# VOLKSWAGEN (.../...)

| | Type Ctr. | | CC | | AC | | | OE | Valeo | DIM. | TECH |
|---|---|---|---|---|---|---|---|---|---|---|---|
| **BORA (.../...)** | | | | | | | | | | | |
| 1.9 SDi,1.9 TDi | 1J2/0/1/2/3/5 ; 1J6 0/1/2/3/5 | D | 1896 | AGR,AHF,AJM,ALH,AQM,ASV,ASZ ATD,AXR | M | + | TSW | 09/98 ▸ 05/05 | 1J0121253AD | **731606** | 414,5 650 | ALM |
| 1.9 TDi | 1J2/0/2 ; 1J6/0/2/5 | D | 1896 | AGR,AHF,AJM,ALH,ATD,AXR | M | + | TSW | 09/98 ▸ | 1J0121253N | **732175** | 650 414,5 | ALM |
| 1.9 SDi,1.9 TDi | 1J2/0/2/5 ; 1J6/0/5 | D | 1896 | AGP,AGR,AHF,ALH,ATD | M | - | TSW | 09/98 ▸ | 1J0121253N | **732175** | 650 414,5 | ALM |
| 1.9 SDi,1.9 TDi | 1J2/0/1/2/3/5 ; 1J6 0/1/2/3/5 | D | 1896 | AGR,AHF,AJM,ALH,AQM,ASV,ASZ ATD,AXR | M | | TSW | 09/98 ▸ | 1J0121253N | **732175** | 650 414,5 | ALM |
| 1.9 TDi | 1J2/0/1/2/3/5 ; 1J6 0/1/2/3/5 | D | 1896 | AGR,AHF,AJM,ASZ,ATD,AUY | A | +/- | TSW | 09/98 ▸ | 1J0121253N | **732175** | 650 414,5 | ALM |
| 1.9 TDi | 1J2/0/1/2/3/5 ; 1J6 0/1/2/3/5 | D | 1896 | AGR,AHF,AJM,ALH,ASZ,ATD,AUY | A | +/- | TSW | 09/98 ▸ 05/05 | 1J0121253AD | **731606** | 414,5 650 | ALM |
| 1.9 TDi | 1J2/2/3 ; 1J6/2/3 | D | 1896 | ARL | A | +/- | TSW | 09/00 ▸ 05/03 | 1J0121253AC | **732867** | 648,6 414,5 | ALB |
| 1.9 TDi | 1J2/2/5 ; 1J6/2/5 | D | 1896 | AJM | A | + | TSW | 02/99 ▸ 05/00 | 1J0121253AD | **731606** | 414,5 650 | ALM |
| 1.9 TDi | 1J2/0/1/2/3 ; 1J6/0 1/2/3 | D | 1896 | ASZ | A | - | TSW | 04/01 ▸ 05/03 | 1J0121253N | **732175** | 650 414,5 | ALM |
| 1.9 TDi | 1J2/0/1/2/3/5 ; 1J6 0/1/2/3 | D | 1896 | AGR,ATD,AUY | A | | TSW | 09/98 ▸ 05/03 | 1J0121253AD | **731606** | 414,5 650 | ALM |
| 1.9 TDi | 1J2/0/1/2/3/5 ; 1J6 0/2/3/5 | D | 1896 | AJM,ALH,AUY | A | | TSW | 09/98 ▸ | 1J0121253N | **732175** | 650 414,5 | ALM |
| **CORRADO** | | | | | | | | | | | |
| 1.8 i 16V,1.8 i G60 | 5090 | E | 1781 | KR,PG | M | + | TSW | 09/88 ▸ 07/93 | 535121251C | **734606** | 675 317 | CBS |
| 1.8 i G60 | 5090 | E | 1781 | PG | M | - | TSW | 09/88 ▸ 07/93 | 535121251B | **731401** | 427 322 | ALB |
| 1.8 i 16V | 5090 | E | 1781 | KR | M | - | TSW | 04/89 ▸ 07/92 | 191121253L | **883820** | 430 322 | ALM |
| 1.8 i G60 | 5090 | E | 1781 | PG | M | | TSW | 09/89 ▸ 07/93 | 535121251B | **731401** | 427 322 | ALB |
| 1.8 i 16V,1.8 i G60 | 5090 | E | 1781 | KR,PG | A | +/- | TSW | 04/89 ▸ 07/91 | 535121251C | **734606** | 675 317 | CBS |
| 1.8 i 16V,1.8 i G60 | 5090 | E | 1781 | KR,PG | A | + | TSW | 04/89 ▸ 07/92 | 535121251C | **734606** | 675 317 | CBS |
| 1.8 i 16V | 5090 | E | 1781 | KR | A | - | TSW | 04/89 ▸ 07/91 | 191121253L | **883820** | 430 322 | ALM |
| 1.8 i G60 | 5090 | E | 1781 | PG | A | - | TSW | 08/89 ▸ 07/92 | 535121251B | **731401** | 427 322 | ALB |
| 1.8 i G60 | 5090 | E | 1781 | PG | A | | TSW | 10/91 ▸ 07/92 | 535121251C | **734606** | 675 317 | CBS |
| 2.0 i,2.0 i 16V | 5090 | E | 1984 | 2E,9A,ADY | M | + | TSW | 08/91 ▸ 07/95 | 535121251C | **734606** | 675 317 | CBS |
| 2.0 i,2.0 i 16V | 5090 | E | 1984 | 2E,9A,ADY | M | - | TSW | 08/91 ▸ 07/95 | 191121253L | **883820** | 430 322 | ALM |
| 2.0 i 16V | 5090 | E | 1984 | 9A | A | +/- | TSW | 08/91 ▸ 07/94 | 535121251C | **734606** | 675 317 | CBS |
| 2.0 i,2.0 i 16V | 5090 | E | 1984 | 2E,9A,ADY | A | + | TSW | 08/91 ▸ 07/95 | 535121251C | **734606** | 675 317 | CBS |
| 2.0 i,2.0 i 16V | 5090 | E | 1984 | 2E,9A,ADY | A | - | TSW | 08/91 ▸ 07/95 | 191121253L | **883820** | 430 322 | ALM |
| 2.0 i 16V | 5090 | E | 1984 | 9A | A | | TSW | 08/91 ▸ 12/91 | 535121251C | **734606** | 675 317 | CBS |
| 2.9 E VR6 | 5090 | E | 2861 | ABV | M | +/- | | 08/91 ▸ 07/95 | 535121251E | | 620 302 | CBS |
| 2.9 E VR6 | 5090 | E | 2861 | ABV | A | +/- | | 08/91 ▸ 07/95 | 535121251E | | 620 302 | CBS |
| 2.9 E VR6 | 5090 | E | 2861 | ABV | A | + | TSW | 08/91 ▸ 07/95 | 535121251C | **734606** | 675 317 | CBS |
| 2.9 E VR6 | 5090 | E | 2861 | ABV | A | | TSW | 08/91 ▸ 07/95 | 535121251C | **734606** | 675 317 | CBS |
| 2.9 E VR6 | 5090 | E | 2861 | ABV | A | | | 09/91 ▸ 12/91 | 535121251E | | 620 302 | CBS |
| **DERBY (81>84)** | | | | | | | | | | | |
| 1.05 E-000 001 ▸ | 873/0/1/2 | E | 1043 | GL | M | - | TSW | 08/83 ▸ 10/84 | 867121253E | **883818** | 380 322 | ALM |
| 1.05 ▸ D-200 000 | 873/0/1/2 | E | 1043 | GL | M | - | | 10/81 ▸ 08/83 | 867121253 | | 380 322 | ALM |
| 1.1 E-000 001 ▸ | 873/0/1/2/A/B/C | E | 1093 | HB | M | - | TSW | > ▸ 07/83 | 171121253CJ | **883819** | 430 322 | ALM |
| 1.3 E-000 001 ▸ | 873/0/1/2 | E | 1272 | HH,HK | M | - | TSW | > ▸ 10/84 | 171121253CJ | **883819** | 430 322 | ALM |
| 1.3 | 873/0/1/2 | E | 1272 | HK | M | - | TSW | 08/83 ▸ 10/84 | 867121253E | **883818** | 380 322 | ALM |
| 1.3 | 873/1/2 | E | 1272 | GK | M | - | TSW | 08/83 ▸ 10/84 | 321121253BM | **883720** | 525 322 | ALM |
| 1.3 | 873/1/2 | E | 1272 | GK | M | - | | 08/83 ▸ | 321121253H | | 525 322 | ALM |
| **EOS (2006>2010)** | | | | | | | | | | | |
| 1.4 FSi 16V | 1F73 | E | 1390 | CAXA | M | +/- | | 11/07 ▸ 11/10 | 1K0121251BN | **735179** | | |
| 1.6 FSi 16V | 1F73 | E | 1598 | BLF | M | +/- | TSW | 05/06 ▸ | 1K0121251F | **734335** | 640 414,5 | ALM |
| 1.6 FSi 16V | 1F73 | E | 1598 | BLF | M | +/- | TSW | 05/06 ▸ 05/08 | 1K0121251BR | **734335** | 640 414,5 | ALM |
| 1.6 FSi 16V | 1F73 | E | 1598 | BLF | M | +/- | TSW | 05/06 ▸ | 1K0121251P | **734332** | 640 414,5 | ALM |
| 1.6 FSi 16V | 1F73 | E | 1598 | BLF | M | | TSW | 05/06 ▸ 05/08 | 1K0121251P | **734332** | 640 414,5 | ALM |
| 1.6 FSi 16V | 1F73 | E | 1598 | BLF | M | | TSW | 05/06 ▸ 05/08 | 1K0121251F | **734335** | 640 414,5 | ALM |
| 2.0 FSi 16V | 1F73 | E | 1984 | BVY,BVZ | M | +/- | TSW | 05/06 ▸ | 1K0121251AR | **735120** | 650 414,5 | ALM |
| 2.0 TFSi 16V | 1F73 | E | 1984 | BWA | M | +/- | Air Seal | 05/06 ▸ 05/07 | 1K0121251DM | **734333** | 650 454,3 | ALB |
| 2.0 FSi 16V 8-011 602 ▸ | 1F73 | E | 1984 | BVY,BVZ | M | +/- | | 07/07 ▸ 05/08 | 1K0121251CN | **735186** | 650 414,5 | ALM |
| 2.0 FSi 16V | 1F73 | E | 1984 | BVY,BVZ | M | | TSW | 05/06 ▸ 05/08 | 1K0121251AR | **735120** | 650 414,5 | ALM |
| 2.0 TFSi 16V | 1F73 | E | 1984 | BPY,BWA | A | +/- | Air Seal | 05/06 ▸ 11/10 | 1K0121251DM | **734333** | 650 454,3 | ALB |
| 2.0 FSi 16V ▸ 8-011 602 | 1F73 | E | 1984 | BVY,BVZ | M | +/- | TSW | 05/06 ▸ 07/07 | 1K0121251CJ | **735120** | 650 414,5 | ALM |
| 2.0 TDi 16V | 1F73 | D | 1968 | CBAB/F | M | +/- | Air Seal | 05/08 ▸ 11/10 | 1K0121251DM | **734333** | 650 454,3 | ALB |

# VOLKSWAGEN (.../...)

## EOS (2006>2010) (.../...)

| | | | CC | | | AC | | | OE | Valeo | DIM. | TECH |
|---|---|---|---|---|---|---|---|---|---|---|---|---|
| 2.0 TDi 16V | 1F73 | D | 1968 | CBAB/F | M | | Air Seal | 05/08 ▸ | 1K0121251DM | **734333** | 650 454,3 | ALB |
| 2.0 TDi 16V | 1F73 | D | 1968 | CBAB/F | A | +/- | Air Seal | 05/08 ▸ 11/10 | 1K0121251DM | **734333** | 650 454,3 | ALB |
| 2.0 TDi 16V | 1F73 | D | 1968 | CBAB/F | A | | Air Seal | 05/08 ▸ | 1K0121251DM | **734333** | 650 454,3 | ALB |

## EOS (2010>)

| | | | | | | | | | | | | |
|---|---|---|---|---|---|---|---|---|---|---|---|---|
| 1.4 TSI 122 16V | 1F84 | E | 1390 | CAXA | M | +/- | | 11/10 ▸ | 1K0121251BN | **735179** | | |
| 1.4 TSI 122 16V | 1F84 | E | 1390 | CAXA | M | +/- | TSW | 11/10 ▸ | 1K0121253BB | **732872** | 650 414,5 | ALM |
| 2.0 TDI 136 16V<br>2.0 TDI 140 16V<br>1FB006377 ▸ | 1F84 | D | 1968 | CFFA,CFFB | M | +/- | Air Seal | > ▸ | 1K0121251DM | **734333** | 650 454,3 | ALB |
| 2.0 TDI 136 16V<br>2.0 TDI 140 16V | 1F84 | D | 1968 | CFFA,CFFB | A | +/- | Air Seal | > ▸ | 1K0121251DM | **734333** | 650 454,3 | ALB |

## FOX

| | | | | | | | | | | | | |
|---|---|---|---|---|---|---|---|---|---|---|---|---|
| 1.2 i | 5Z11 | E | 1198 | BMD | M | + | TSW | 11/04 ▸ | 6Q0121253Q | **732862** | 632 414,5 | ALM |
| 1.2 i | 5Z11 | E | 1198 | BMD | M | | TSW | 11/04 ▸ | 6QE121253 | **732863** | 430 414,5 | ALM |
| 1.4 i<br>70060 001 ▸ | 5Z1/1/4 | E | 1390 | BKR | M | + | | > ▸ | 5Z0121253D | | 632 414,5 | ALB |
| 1.4 i<br>70060 001 ▸ | 5Z1/1/4 | E | 1390 | BKR | M | - | | > ▸ | 5Z0121253C | | 430 414,5 | ALM |
| 1.4 TDi | 5Z14 | D | 1422 | BNM | M | | | 01/07 ▸ | 5N0121253H | **735133** | 650 406 | ALB |
| 1.4 TDi | 5Z11 | D | 1422 | BNM | M | +/- | TSW | 11/04 ▸ | 6Q0121253R | **732864** | 632 414,5 | ALM |

## GOLF I (74>83)

| | | | | | | | | | | | | |
|---|---|---|---|---|---|---|---|---|---|---|---|---|
| 1.1 | 171/0/1 ; 172/0/1 ; 173/0/1 ; 174/0/1 | E | 1093 | FA,FJ | M | | | 04/74 ▸ 12/75 | 171121253AD | | 380 322 | ALM |
| 1.1 | 171/0/1/2 ; 172/0/1/2 ; 173/0/1/2 ; 174/0/1/2 | E | 1093 | FA,FJ | M | | | 01/76 ▸ 07/80 | 171121253E | | 430 322 | ALM |
| 1.1 | 171/0/1 | E | 1093 | GG | M | | TSW | 08/79 ▸ 07/83 | 171121253CJ | **883819** | 430 322 | ALM |
| 1.3 | 171/0/1 | E | 1272 | GF | M | | TSW | 08/79 ▸ 07/83 | 171121253CJ | **883819** | 430 322 | ALM |
| 1.5 | 1711 | E | 1457 | JB | A | | TSW | 08/78 ▸ 07/83 | 171121253CJ | **883819** | 430 322 | ALM |
| 1.5<br>▸ 15-D-007000, 17-D-330000 | 1710 | E | 1457 | GH | A | | | 08/79 ▸ 12/81 | 171121253BD | | 430 322 | ALM |
| 1.5<br>▸ 53-B-020001, 17-B-340738 | 171/0/1 | E | 1457 | GH | M | | | 08/79 ▸ 12/81 | 171121253BD | | 430 322 | ALM |
| 1.5 | 1710 | E | 1471 | FH,FK | M | + | | 02/74 ▸ 07/75 | 171121253D | | 480 322 | ALM |
| 1.5 | 1710 | E | 1471 | FH,FK | M | | | 02/74 ▸ 07/75 | 171121253AD | | 380 322 | ALM |
| 1.5 | 1710 | E | 1471 | FH,FK | A | + | | 02/74 ▸ 12/75 | 171121253D | | 480 322 | ALM |
| 1.5 | 1710 | E | 1471 | FH,FK | A | | | 02/74 ▸ 12/75 | 171121253AD | | 380 322 | ALM |
| 1.5<br>▸ 15-B-011497, 53-B-020001 | 1711 | E | 1471 | FH | A | | | 09/74 ▸ 07/81 | 171121253BD | | 430 322 | ALM |
| 1.6 | 1713 ; 1723 | E | 1588 | EG | M | +/- | | 07/80 ▸ 07/82 | 171121253D | | 480 322 | ALM |
| 1.6 | 1710 | E | 1588 | FP,FT,FV | M | + | | 08/75 ▸ 07/79 | 171121253G | | 480 322 | ALM |
| 1.6 | 1713 ; 1723 | E | 1588 | EG | M | + | | 06/76 ▸ 07/82 | 171121253CL | | 525 322 | ALM |
| 1.6<br>17-D-330001, 16-D-330001 ▸ | 1711 | E | 1588 | EM | M | + | TSW | 08/81 ▸ 07/83 | 321121253AL | **883727** | 525 322 | ALM |
| 1.6<br>53-D-015001 ▸ | 1711 | E | 1588 | EM | M | | TSW | > ▸ 07/81 | 191121253K | **883820** | 430 322 | ALM |
| 1.6<br>17-D-330001 ▸ | 1712 | E | 1588 | EM | M | | TSW | > ▸ 07/81 | 321121253AL | **883727** | 525 322 | ALM |
| 1.6 | 1710 | E | 1588 | FP,FT,FV | A | + | | 08/75 ▸ 07/79 | 171121253G | | 480 322 | ALM |
| 1.6<br>16-D-330001, 17-D-330001 ▸ | 171/0/2 | E | 1588 | EM,FN | A | + | TSW | 08/81 ▸ 07/83 | 321121253AL | **883727** | 525 322 | ALM |
| 1.6<br>F-1763153149, F-5362019823 ▸ | 1711 | E | 1588 | FP,FT,FV | A | | | > ▸ 07/81 | 171121253G | | 480 322 | ALM |
| 1.6<br>15-D-007001 ▸ | 171/0/2 | E | 1588 | EM,FN | A | | TSW | > ▸ 07/81 | 191121253K | **883820** | 430 322 | ALM |
| 1.6<br>▸ 15-A-0819462 | 1712 | E | 1588 | FP,FV | M | | | 02/79 ▸ | 171121253G | | 480 322 | ALM |
| 1.6<br>▸ 15-B-011497, 16-B-340738 | 171/0/1 | E | 1588 | EM,FV | M | | | 02/76 ▸ | 171121253BD | | 430 322 | ALM |
| 1.6<br>▸ 15-D-007000, 53-D-015000 | 171/0/2 | E | 1588 | EM,FN,FV | A | | | 01/76 ▸ | 171121253BD | | 430 322 | ALM |
| 1.6<br>F-1763153149, F-5362019823 ▸ F-5362019822, F-1763153148 | 1723 ; 171/0/1/2/3 | E | 1588 | EG,FN,FP,FV | M | | | > ▸ | 171121253D | | 480 322 | ALM |
| 1.6<br>F-1763153149, F-5362019823 ▸ F-5362019822, F-1763153148 | 1710 | E | 1588 | FN | A | | | > ▸ | 171121253D | | 480 322 | ALM |
| 1.8 | 1723 ; 1733 ; 171/3 | E | 1781 | DX | M | +/- | TSW | 08/82 ▸ 12/83 | 321121253AL | **883727** | 525 322 | ALM |
| 1.5 D | 171/0/1/2 ; 172/0/1/2 ; 173/0/1/2 ; 174/0/1/2 | D | 1471 | CK | M | + | | 08/76 ▸ 07/80 | 171121253CL | | 525 322 | ALM |
| 1.5 D | 171/1/2 ; 172/0/1/2 ; 173/0/1/2 ; 174/0/1/2 | D | 1471 | CK | M | - | | 08/76 ▸ 07/80 | 171121253D | | 480 322 | ALM |

Radiator Radiateur Motorkühler Radiatore di raffreddamento Radiator Radyatör Radiador Радиатор vízhűtő Vodní chladič Radiator Ψυγείο



• **New** Nouveau **Nuevo** Novo **Nuovo** Nieuw **Neu** Nowość **Yeni** Новый Νέο **Nový**

# VOLKSWAGEN (.../...)

## GOLF I (74>83) (.../...)

| | | | | | | | | | | | | | |
|---|---|---|---|---|---|---|---|---|---|---|---|---|---|
| 1.5 D | 1711 | D | 1471 | CK | M | | | > ▸ 07/76 | 171121253G | | 480 | 322 | ALM |
| F-5362019823, F-1763153149 ▸ | | | | | | | | | | | | | |
| 1.5 D | 1710 | D | 1471 | CK | M | | | 08/76 ▸ 07/80 | 171121253D | | 480 | 322 | ALM |
| 1.5 D | 171/0/1/2 ; 172/0/1/2 ; 173/0/1/2 ; 174/0/1/2 | D | 1471 | CK | A | + | | 08/77 ▸ 07/78 | 171121253CL | | 525 | 322 | ALM |
| 1.5 D | 171/0/1/2 ; 172/0/1/2 ; 173/0/1/2 ; 174/0/1/2 | D | 1471 | CK | A | - | | 08/77 ▸ 07/78 | 171121253D | | 480 | 322 | ALM |
| 1.5 D | 1711 | D | 1471 | CK | A | | | > ▸ 07/82 | 171121253G | | 480 | 322 | ALM |
| F-5362019823, F-1763153149 ▸ | | | | | | | | | | | | | |
| 1.6 D,1.6 TD | 171/1/2/T ; 172/0/1/2 ; 173/0/1/2/T ; 174/0/1/2 | D | 1588 | CR,CY | M | +/- | | 08/80 ▸ 12/83 | 171121253CL | | 525 | 322 | ALM |
| 1.6 D | 171/0/1/2 ; 172/0/1/2 ; 173/0/1/2 ; 174/0/1/2/A | D | 1588 | CR,JK | M | + | | 08/80 ▸ 12/83 | 171121253CL | | 525 | 322 | ALM |
| 1.6 D | 171/0/1/2 ; 172/0/1/2 ; 173/0/1/2 ; 174/0/1/2/A | D | 1588 | CR | M | - | TSW | 08/80 ▸ 07/82 | 321121253AL | 883727 | 525 | 322 | ALM |
| 1.6 D | 1711 | D | 1588 | CR,JK | M | | | > ▸ 07/77 | 171121253G | | 480 | 322 | ALM |
| F-1763153149, F-5362019823 ▸ | | | | | | | | | | | | | |
| 1.6 D,1.6 TD | 171/0/1 | D | 1588 | CR,CY,JK | M | | TSW | 08/80 ▸ 12/83 | 321121253AL | 883727 | 525 | 322 | ALM |
| 1.6 TD | 1710 | D | 1588 | CY | M | | | 03/82 ▸ 07/83 | 171121253CL | | 525 | 322 | ALM |
| 1.6 D | 171/0/1/2 ; 172/0/1/2 ; 173/0/1/2 ; 174/0/1/2/A | D | 1588 | CR | A | + | | 08/80 ▸ 07/82 | 171121253CL | | 525 | 322 | ALM |
| 1.6 D | 171/2 ; 172/0/1/2 ; 173/0/1/2 ; 174/0/1/2/A | D | 1588 | CR | A | - | TSW | 08/81 ▸ 07/82 | 321121253AL | 883727 | 525 | 322 | ALM |
| 1.6 D | 171/0/1 | D | 1588 | CR | A | | TSW | > ▸ 07/82 | 321121253AL | 883727 | 525 | 322 | ALM |
| 15-D-007001, 17-B-340739 ▸ | | | | | | | | | | | | | |
| 1.6 D | 1711 | D | 1588 | JK | A | | | > ▸ 07/82 | 171121253D | | 480 | 322 | ALM |
| 15-A-0819463 ▸ | | | | | | | | | | | | | |
| 1.6 D | 1711 | D | 1588 | JK | A | | | 08/78 ▸ | 171121253G | | 480 | 322 | ALM |

## GOLF I CABRIOLET (79>93)

| | | | | | | | | | | | | | |
|---|---|---|---|---|---|---|---|---|---|---|---|---|---|
| 1.1 | 1542 ; 1552 | E | 1093 | FA | M | | | 01/79 ▸ 07/79 | 171121253E | | 430 | 322 | ALM |
| 1.3 i | 1552 | E | 1272 | HK | M | | TSW | 08/83 ▸ 07/86 | 321121253AL | 883727 | 525 | 322 | ALM |
| 1.5 | 1542 ; 1552 | E | 1457 | GH,JB | M | | | 01/79 ▸ 08/82 | 171121253BD | | 430 | 322 | ALM |
| 1.5 | 1542 ; 1552 | E | 1457 | GH,JB | A | | | 01/79 ▸ 08/82 | 171121253BD | | 430 | 322 | ALM |
| 1.6 i | 1542 ; 1552 | E | 1588 | EG | M | +/- | | 07/80 ▸ 07/82 | 171121253D | | 480 | 322 | ALM |
| 1.6 | 1552 | E | 1588 | FV | M | + | TSW | 08/83 ▸ 07/90 | 321121253AL | 883727 | 525 | 322 | ALM |
| 1.6 | 1552 | E | 1588 | FN | M | | | 01/79 ▸ 07/79 | 171121253G | | 480 | 322 | ALM |
| 1.6 | 1542 ; 1552 | E | 1588 | FV | M | | | 01/79 ▸ 07/79 | 171121253BD | | 430 | 322 | ALM |
| 1.6 | 1552 | E | 1588 | FV | M | | TSW | 08/83 ▸ 07/90 | 191121253K | 883820 | 430 | 322 | ALM |
| 1.6 | 1552 | E | 1588 | FN | A | + | TSW | 08/83 ▸ 12/92 | 321121253AL | 883727 | 525 | 322 | ALM |
| 1.6 | 1542 ; 1552 | E | 1588 | FV | A | | | 01/79 ▸ 07/79 | 171121253BD | | 430 | 322 | ALM |
| 1.6 | 1552 | E | 1588 | FN | A | | TSW | 08/83 ▸ 12/92 | 191121253K | 883820 | 430 | 322 | ALM |
| 1.6 | 154/2/4 ; 155/2/4 | E | 1595 | EW,HN | M | + | TSW | 08/83 ▸ 07/92 | 321121253AL | 883727 | 525 | 322 | ALM |
| 1.6 | 1554 | E | 1595 | EW | M | + | TSW | 08/86 ▸ 07/90 | 191121251C | 883849 | 675 | 322 | ALM |
| 1.6 | 155/2/4 | E | 1595 | EW | M | - | TSW | 08/83 ▸ 07/92 | 191121253K | 883820 | 430 | 322 | ALM |
| 1.6 | 154/2/4 ; 155/2/4 | E | 1595 | EW,HN | M | | TSW | 08/83 ▸ 07/91 | 191121253K | 883820 | 430 | 322 | ALM |
| 1.6 | 1554 | E | 1595 | EW | M | | TSW | 08/83 ▸ 07/87 | 191121253C | 883820 | 430 | 322 | ALM |
| 1.6 | 1552 | E | 1595 | EW | M | | TSW | 08/83 ▸ 07/86 | 171121253CJ | 883819 | 430 | 322 | ALM |
| 1.6 | 1554 | E | 1595 | EW | M | | TSW | 08/86 ▸ 07/90 | 321121253AL | 883727 | 525 | 322 | ALM |
| 1.6 | 1552 ; 154/2/4 | E | 1595 | EW,HN | A | + | TSW | 08/83 ▸ 07/91 | 321121253AL | 883727 | 525 | 322 | ALM |
| 1.6 | 1554 | E | 1595 | EW | A | + | TSW | 08/86 ▸ 07/92 | 191121251C | 883849 | 675 | 322 | ALM |
| 1.6 | 1552 | E | 1595 | EW | A | + | TSW | 08/87 ▸ 07/89 | 191121253N | 734853 | 525 | 317 | ALM |
| 1.6 | 154/2/4 ; 155/2/4 | E | 1595 | EW | A | - | TSW | 08/83 ▸ 07/92 | 191121253K | 883820 | 430 | 322 | ALM |
| 1.6 | 1544 ; 1552 | E | 1595 | EW | A | | | 08/83 ▸ 07/91 | 321121251AL | | 700 | 322 | ALM |
| 1.6 | 155/2/4 | E | 1595 | EW | A | | TSW | 08/83 ▸ 07/92 | 321121253AL | 883727 | 525 | 322 | ALM |
| 1.6 | 1552 | E | 1595 | HN | A | | TSW | 08/83 ▸ 07/86 | 191121253K | 883820 | 430 | 322 | ALM |
| 1.7 i | 1552 | E | 1716 | EN | A | + | TSW | 08/83 ▸ 12/92 | 321121253AL | 883727 | 525 | 322 | ALM |
| 1.7 i | 1552 | E | 1716 | EN | A | | TSW | 08/83 ▸ 12/92 | 191121253K | 883820 | 430 | 322 | ALM |
| 1.8 i | 1552 | E | 1781 | DX | M | +/- | TSW | 08/83 ▸ 07/88 | 321121253AL | 883727 | 525 | 322 | ALM |
| 1.8,1.8 i | 154/2 ; 155/2/A | E | 1781 | EX,KT | M | + | TSW | 08/83 ▸ 12/92 | 321121253AL | 883727 | 525 | 322 | ALM |
| 1.8 | 1554 | E | 1781 | EX,KT | M | + | TSW | 04/84 ▸ 07/87 | 191121251C | 883849 | 675 | 322 | ALM |
| 1.8 i | 155/2/J/K | E | 1781 | 2H,JH | M | + | TSW | 08/87 ▸ 07/93 | 191121253N | 734853 | 525 | 317 | ALM |
| 1.8,1.8 i | 154/2/4/A ; 155/2/4 A/J/K | E | 1781 | 2H,DX,EX,JH,JJ,KT | M | | TSW | 08/82 ▸ 07/93 | 321121253AL | 883727 | 525 | 322 | ALM |
| 1.8,1.8 i | 154/2 ; 155/2/A | E | 1781 | EX,KT | M | | TSW | 08/83 ▸ 12/92 | 191121253K | 883820 | 430 | 322 | ALM |
| 1.8 i | 1554 | E | 1781 | KT | M | | TSW | 08/86 ▸ 12/87 | 171121253CJ | 883819 | 430 | 322 | ALM |
| 1.8 i | 155/2/J/K | E | 1781 | 2H,JH | A | + | TSW | 08/83 ▸ 07/93 | 191121253N | 734853 | 525 | 317 | ALM |
| 1.8,1.8 i | 154/2 ; 155/2/4/J | E | 1781 | 2H,EX | A | + | TSW | 08/83 ▸ 07/93 | 321121253AL | 883727 | 525 | 322 | ALM |
| 1.8 i | 155/2/J/K | E | 1781 | 2H,EX,JH | A | | TSW | 08/83 ▸ 07/93 | 321121253AL | 883727 | 525 | 322 | ALM |

# VOLKSWAGEN (.../...)

## GOLF I CABRIOLET (79>93) (.../...)

| Type Ctr. | | | CC | | AC | | 2+3 | OE | Valeo | DIM. | | TECH |
|---|---|---|---|---|---|---|---|---|---|---|---|---|
| 1.8,1.8 i | 154/2 ; 155/2/4/J | E | 1781 | 2H,EX | A | | TSW | 08/83 ▸ 07/93 | 191121253K | 883820 | 430 | 322 | ALM |

## GOLF II (83>91)

| | | | | | | | | | | | | | |
|---|---|---|---|---|---|---|---|---|---|---|---|---|---|
| 1.05 | 1920 ; 191/0/1/2 ; 1940 ; 193/0/1/2 ; 1G1/1 2/3 | E | 1043 | GN,HZ | M | | | 08/83 ▸ 10/91 | 076121253 | | 480 | 550 | CBS |
| 1.05 | 1920 ; 191/0/1/2 ; 1940 ; 193/0/1/2 ; 1G1/2 3 | E | 1043 | GN,HZ | M | | TSW | 08/83 ▸ 10/91 | 171121253CJ | 883819 | 430 | 322 | ALM |
| 1.3 | 1G12 | E | 1272 | 2G | M | + | TSW | 01/89 ▸ 07/87 | 191121251F | 883849 | 675 | 322 | ALM |
| 1.3 | 1G12 | E | 1272 | 2G | M | + | TSW | 01/89 ▸ 10/91 | 191121251C | 883849 | 675 | 322 | ALM |
| 1.3 | 1920 ; 191/0/1/2/H/J ; 193/0/1/2/G/H/J ; 194 0/1 ; 1G1/0/1/2/3 | E | 1272 | 2G,GT,HK,MH,NU,NZ | M | | | 08/83 ▸ 07/92 | 076121253 | | 480 | 550 | CBS |
| 1.3 | 1920 ; 191/0/1/2 ; 193/0/1/2 ; 194/0/1 ; 1G1 2/3 | E | 1272 | 2G,GT,HK,MH,NU,NZ | M | | TSW | 08/83 ▸ 10/91 | 171121253CJ | 883819 | 430 | 322 | ALM |
| 1.3 | 1G12 | E | 1272 | 2G | M | | TSW | 01/89 ▸ 10/91 | 191121253L | 883820 | 430 | 322 | ALM |
| 1.6 | 191/0/1/2 ; 1942 ; 193/0/1/2 ; 1G1/2/3 | E | 1595 | EZ,HM,PN,RF | M | + | TSW | 08/83 ▸ 10/91 | 191121251C | 883849 | 675 | 322 | ALM |
| 1.6 | 1G12 | E | 1595 | ABN | M | + | TSW | 08/91 ▸ 07/91 | 535121251C | 734606 | 675 | 317 | CBS |
| 1.6 | 1920 ; 191/0/1/2/H/J ; 193/0/1/2/G/H/J ; 194 1/2 ; 1G1/1/2/3 | E | 1595 | ABN,ABX,EZ,EZA,HM,PN,RF | M | | | 08/83 ▸ 07/92 | 076121253 | | 480 | 550 | CBS |
| 1.6 | 191/0/1/2 ; 1942 ; 193/0/1/2 ; 1G1/2/3 | E | 1595 | EZ,HM,PN,RF | M | | TSW | 08/83 ▸ 10/91 | 191121253K | 883820 | 430 | 322 | ALM |
| 1.6 | 1G12 | E | 1595 | ABN | M | | | 08/91 ▸ 07/91 | 191121253AL | | | | |
| 1.6 | 191/0/1/2 ; 193/0/1/2 ; 194/1/2 ; 1G1/2/3 | E | 1595 | EZ,HM,PN,RF | A | + | TSW | 08/83 ▸ 10/91 | 191121251C | 883849 | 675 | 322 | ALM |
| 1.6 | 1920 ; 191/0/1/2 ; 193/0/1/2 ; 194/0/1/2 1G1/1/2/3 | E | 1595 | EZ,EZA,HM,PN,RF | A | | | 08/83 ▸ 07/92 | 076121253 | | 480 | 550 | CBS |
| 1.6 | 191/0/1/2 ; 193/0/1/2 ; 194/1/2 ; 1G1/2/3 | E | 1595 | EZ,HM,PN,RF | A | | TSW | 08/83 ▸ 10/91 | 191121253K | 883820 | 430 | 322 | ALM |
| 1.8 G60 | 1G47 | E | 1763 | 1H | M | + | TSW | 08/88 ▸ 07/89 | 191121251C | 883849 | 675 | 322 | ALM |
| 1.8 G60 | 1G17 ; 1G47 | E | 1763 | 1H | M | | | 08/88 ▸ 12/89 | 191121253P | | 630 | 317 | CBS |
| 1.8 G60 | 1G47 | E | 1763 | 1H | M | | TSW | 08/88 ▸ 07/89 | 321121253AL | 883727 | 525 | 322 | ALM |
| 1.8 G60 | 1G17 ; 1G47 | E | 1763 | 1H | M | | | 08/88 ▸ 12/89 | 076121253 | | 480 | 550 | CBS |
| 1.8,1.8 G60,1.8 i 1.8 i 16V | 168Z ; 167/5 ; 191/0 1/2/3/G/N/U/V/W/Z 192/0/1/2/3/U/V/Z ; 193/0/1/2/3/7/N/P/U/V 194/0/1/3/7 ; 1G47 ; 1G1/1/2/3/5 | E | 1781 | EV,GU,GX,GZ,HT,HV,KR,PB,PF,PG PL,RD,RH,RP,RV | M | + | TSW | 01/84 ▸ 07/97 | 191121251C | 883849 | 675 | 322 | ALM |
| 1.8 i 16V | 1923 ; 191/3/N ; 193 3/N | E | 1781 | KR,PL | M | + | TSW | 02/86 ▸ 07/87 | 191121251F | 883849 | 675 | 322 | ALM |
| 1.8,1.8 i 16V | 1923 ; 191/3/N ; 193 3/N ; 1G1/1/2/5/J | E | 1781 | 1P,KR,PL | M | + | TSW | 02/86 ▸ 07/91 | 191121253 | 883849 | 675 | 322 | ALM |
| 1.8,1.8 G60 | 1G15 ; 1G47 | E | 1781 | PG | M | + | TSW | 08/88 ▸ 07/91 | 535121253B | 734606 | 675 | 317 | CBS |
| 1.8 | 1G1/1/2/5/J | E | 1781 | 1P | M | + | | 08/88 ▸ 07/91 | 191121253B | | 673 | 322 | CBS |
| 1.8,1.8 G60 | 1G15 ; 1G47 | E | 1781 | PG | M | + | TSW | 04/89 ▸ 07/91 | 535121251C | 734606 | 675 | 317 | CBS |
| 1.8 G60 | 1G17 | E | 1781 | PG | M | + | TSW | 04/89 ▸ 08/89 | 535121251B | 731401 | 427 | 322 | ALB |
| 1.8 | 1G15 | E | 1781 | PG | M | + | | 04/90 ▸ 07/91 | 191121253AL | | | | |
| 1.8 i 16V | 1923 ; 191/3/N 1G15 ; 193/3/N | E | 1781 | KR,PL | M | - | TSW | 02/86 ▸ 10/91 | 191121253L | 883820 | 430 | 322 | ALM |
| 1.8,1.8 G60,1.8 i 1.8 i 16V | 168Z ; 167/5 ; 191/0 1/2/3/G/H/J/N/S/T/U V/W/Z ; 192/0/1/2/3/T/U/V/Z ; 193/0/1/2/3/7 G/H/J/K/N/P/S/T/U/V/W/Z ; 194/0/1/2/3/7/T/V Z ; 1G47 ; 1G1/1/2/3/5/7/J | E | 1781 | 1PEV,GU,GX,GZ,HT,HV,KR,PB,PF PG,PL,RD,RH,RP,RV | M | | | 08/83 ▸ 07/97 | 076121253 | | 480 | 550 | CBS |
| 1.8,1.8 i | 167/5 ; 191/0/1/2/3 G/N/U/V/Z ; 192/0/1/2/3/U/V/Z ; 193/0/1/2/3 7/P/U/V/W ; 194/0/1/3/7 ; 1G1/1/2/3/5/J | E | 1781 | 1PEV,GU,GX,GZ,HT,HV,PB,PF,RD RH,RP | M | | TSW | 01/84 ▸ 10/91 | 321121253AL | 883727 | 525 | 322 | ALM |
| 1.8,1.8 G60,1.8 i | 191W ; 193V ; 1G15 1G47 ; 168/Z | E | 1781 | GX,PG,RH | M | | TSW | 08/86 ▸ 07/91 | 191121253K | 883820 | 430 | 322 | ALM |
| 1.8,1.8 i | 193U ; 192/U/V | E | 1781 | GX,RH | M | | TSW | 08/87 ▸ 07/88 | 191121253 | 883849 | 675 | 322 | ALM |
| 1.8,1.8 i | 193U ; 192/U/V | E | 1781 | GX,RH | M | | | 08/87 ▸ 07/88 | 191121253B | | 673 | 322 | CBS |
| 1.8,1.8 G60 | 1G47 ; 1G1/2/3/5 | E | 1781 | PG,RP,RV | M | | | 08/88 ▸ 10/91 | 191121253AL | | | | |
| 1.8 G60 | 1G17 | E | 1781 | PG | M | | TSW | 04/89 ▸ 08/89 | 535121253B | 734606 | 675 | 317 | CBS |
| 1.8 | 1G15 | E | 1781 | PG | M | | TSW | 04/90 ▸ 07/91 | 535121251B | 731401 | 427 | 322 | ALB |
| 1.8,1.8 i | 191/0/1/2/G ; 192/0 1/2 ; 193/0/1/2/7 ; 194/0/1/2/7 ; 1G1/2/3/5 | E | 1781 | GU,GX,HV,RH,RP,RV | A | + | TSW | 01/84 ▸ 10/91 | 191121251C | 883849 | 675 | 322 | ALM |
| 1.8,1.8 i | 191/0/1/2/G/H/J 192/0/1/2 ; 193/0/1/2/7/G/H/J/K/T ; 194/0/1 2/7/G ; 1G1/1/2/3/5 | E | 1781 | GU,GX,HV,RH,RP,RV | A | | | 08/83 ▸ 10/91 | 076121253 | | 480 | 550 | CBS |
| 1.8,1.8 i | 191/0/1/2/G ; 192/0 1/2 ; 193/0/1/2/7 ; 194/0/1/2/7 ; 1G1/2/3 | E | 1781 | GU,GX,HV,RH,RP | A | | TSW | 01/84 ▸ 10/91 | 321121253AL | 883727 | 525 | 322 | ALM |
| 1.8 | 1G1/2/3/5 | E | 1781 | RP,RV | A | | | 08/88 ▸ 10/91 | 191121253AL | | | | |
| 1.6 D | 191/0/1/2 ; 192/0/1/2 ; 193/0/1/2 ; 194/0/2 1G1/2/3 | D | 1588 | JP,ME | M | | TSW | 08/83 ▸ 10/91 | 321121253AL | 883727 | 525 | 322 | ALM |

Radiator Radiateur Motorkühler Radiatore di raffreddamento Radiator Radyatör Radiador Радиатор vízhűtő Vodní chladič Radiator Ψυγείο



• **New** Nouveau **Nuevo** Novo **Nuovo** Nieuw **Neu** Nowość **Yeni** Новый Νέο **Nový**

# VOLKSWAGEN (.../...)

## GOLF II (83>91) (.../...)

| | | | | | | | | | | | | | |
|---|---|---|---|---|---|---|---|---|---|---|---|---|---|
| 1.6 D,1.6 TD | 191/0/1/2/T ; 192/0 1/2 ; 193/0/1/2/7/T ; 194/0/1/2 ; 1G1/1/2/3 5 | D | 1588 | 1V,JP,JR,ME,MF,RA,SB | M | | | 08/83 ▸ 07/92 | 076121253 | | 480 | 550 | CBS |
| 1.6 TD | 1921 ; 191/0/1/2/T 193/0/1/2/7 ; 1G1/2/3/5 G385828 ▸ | D | 1588 | 1V,JR,MF,RA,SB | M | | TSW | 08/83 ▸ 10/91 | 191121253 | 883849 | 675 | 322 | ALM |
| 1.6 TD | 191/0/1/2/T ; 193/0 1/2/7 ; 1G1/2/3/5 G385828 ▸ | D | 1588 | JR,MF | M | | TSW | 08/83 ▸ 10/91 | 191121251F | 883849 | 675 | 322 | ALM |
| 1.6 D | 1920 ; 191/0/1/2 ; 193/0/1/2 ; 194/0/2 ; 1G1 1/2/3 | D | 1588 | JP | A | | | 08/83 ▸ 10/91 | 076121253 | | 480 | 550 | CBS |
| 1.6 D | 1920 ; 191/0/1/2 ; 193/0/1/2 ; 194/0/2 ; 1G1 2/3 | D | 1588 | JP | A | | TSW | 08/83 ▸ 10/91 | 321121253AL | 883727 | 525 | 322 | ALM |
| 1.6 TD | 1921 ; 191/0/1/2/T 193/0/1/2/7 ; 1G1/2/3/5 | D | 1588 | 1V,JR,RA,SB | M | | | 08/83 ▸ 10/91 | 191121253B | | 673 | 322 | CBS |

## GOLF II CABRIOLET (93>98)

| | | | | | | | | | | | | | |
|---|---|---|---|---|---|---|---|---|---|---|---|---|---|
| 1.6 i | 1E7/3/5/E | E | 1598 | AEK,AFT,AKS | M | + | TSW | 07/94 ▸ 12/97 | 1H0121253BA | 731032 | 628 | 377.5 | ALM |
| 1.6 i | 1E7/3/5 | E | 1598 | AEK | M | - | TSW | 07/94 ▸ 12/95 | 1H0121253D | 731025 | 628 | 322 | ALM |
| 1.6 i | 1E7/3/5/E | E | 1598 | AEK,AFT,AKS | M | | | 07/94 ▸ 02/98 | 076121253 | | 480 | 550 | CBS |
| 1.6 i | 1E7/3/5/E | E | 1598 | AFT,AKS | M | | TSW | 02/96 ▸ 12/97 | 1H0121253D | 731025 | 628 | 322 | ALM |
| 1.6 i | 1E7/3/5/E | E | 1598 | AEK,AFT | A | + | TSW | 07/94 ▸ 12/97 | 1H0121253BA | 731032 | 628 | 377.5 | ALM |
| 1.6 i | 1E7/3/5 | E | 1598 | AEK | A | - | TSW | 07/94 ▸ 12/95 | 1H0121253H | 731025 | 628 | 322 | ALM |
| 1.6 i | 1E7/3/5/E | E | 1598 | AEK,AFT | A | | | 07/94 ▸ 02/98 | 076121253 | | 480 | 550 | CBS |
| 1.6 i | 1E7/3/5/E | E | 1598 | AFT | A | | TSW | 02/96 ▸ 12/97 | 1H0121253H | 731025 | 628 | 322 | ALM |
| 1.8 i | 1E7/3/5 | E | 1781 | AAM,ABS,ADZ | M | + | TSW | 09/93 ▸ 12/97 | 1H0121253BA | 731032 | 628 | 377.5 | ALM |
| 1.8 i | 1E75 | E | 1781 | ANP | M | + | TSW | 01/98 ▸ 07/87 | 191121251C | 883849 | 675 | 322 | ALM |
| 1.8 i | 1E7/3/5 | E | 1781 | AAM,ABS | M | - | TSW | 09/93 ▸ 07/95 | 1H0121253R | 730505 | 525 | 322 | ALM |
| 1.8 i | 1E7/3/5 | E | 1781 | AAM | M | - | TSW | 07/94 ▸ 12/97 | 1H0121253D | 731025 | 628 | 322 | ALM |
| 1.8 i | 1E7/3/5 | E | 1781 | AAM,ABS,ADZ,ANN,ANP | M | | | 09/93 ▸ 02/98 | 076121253 | | 480 | 550 | CBS |
| 1.8 i | 1E7/3/5 | E | 1781 | AAM,ADZ | M | | TSW | 07/94 ▸ 12/97 | 1H0121253R | 730505 | 525 | 322 | ALM |
| 1.8 i | 1E75 | E | 1781 | ANN | M | | | 01/98 ▸ 02/98 | 191121253B | | 673 | 322 | CBS |
| 1.8 i | 1E75 | E | 1781 | ANN | M | | TSW | 01/98 ▸ 02/98 | 191121253 | 883849 | 675 | 322 | ALM |
| 1.8 i | 1E7/3/5 | E | 1781 | ANN,ANP | M | | TSW | 01/98 ▸ 07/87 | 321121253AL | 883727 | 525 | 322 | ALM |
| 1.8 i | 1E7/3/5 | E | 1781 | ABS,ADZ | A | + | TSW | 09/93 ▸ 12/97 | 1H0121253BA | 731032 | 628 | 377.5 | ALM |
| 1.8 i | 1E7/3/5 | E | 1781 | ANP | A | + | TSW | 01/98 ▸ 02/98 | 191121251C | 883849 | 675 | 322 | ALM |
| 1.8 i | 1E7/3/5 | E | 1781 | ABS | A | - | TSW | 09/93 ▸ 07/95 | 1H0121253D | 731025 | 628 | 322 | ALM |
| 1.8 i | 1E7/3/5 | E | 1781 | ABS,ADZ | A | | TSW | 09/93 ▸ 12/97 | 1H0121253H | 731025 | 628 | 322 | ALM |
| 1.8 i | 1E7/3/5 | E | 1781 | ABS,ADZ,ANP | A | | | 09/93 ▸ 02/98 | 076121253 | | 480 | 550 | CBS |
| 1.8 i | 1E7/3/5 | E | 1781 | ADZ | A | | TSW | 12/95 ▸ 12/97 | 1H0121253D | 731025 | 628 | 322 | ALM |
| 1.8 i | 1E75 | E | 1781 | ANP | A | | TSW | 01/98 ▸ 02/98 | 321121253AL | 883727 | 525 | 322 | ALM |
| 1.8 i | 1E73 | E | 1781 | ANP | A | | TSW | 01/98 ▸ 02/98 | 191121253K | 883820 | 430 | 322 | ALM |
| 2.0 i | 1E7/3/5 | E | 1984 | 2E,ADY,AGG,AKR | M | + | TSW | 09/93 ▸ 12/97 | 1H0121253BA | 731032 | 628 | 377.5 | ALM |
| 2.0 i | 1E7/3/5 | E | 1984 | 2E,AGG | M | - | TSW | 09/93 ▸ 12/97 | 1H0121253D | 731025 | 628 | 322 | ALM |
| 2.0 i | 1E7/3/5 | E | 1984 | 2E,ADY,AGG,AKR | M | | | 09/93 ▸ 02/98 | 076121253 | | 480 | 550 | CBS |
| 2.0 i | 1E7/3/5 | E | 1984 | ADY,AKR | M | | TSW | 10/94 ▸ 12/97 | 1H0121253D | 731025 | 628 | 322 | ALM |
| 2.0 i | 1E7/3/5 | E | 1984 | 2E,ADY,AGG | A | + | TSW | 09/93 ▸ 12/97 | 1H0121253BA | 731032 | 628 | 377.5 | ALM |
| 2.0 i | 1E75 | E | 1984 | 2E | A | - | TSW | 09/93 ▸ 09/94 | 1H0121253D | 731025 | 628 | 322 | ALM |
| 2.0 i | 1E7/3/5 | E | 1984 | AGG | A | - | TSW | 08/95 ▸ 12/97 | 1H0121253H | 731025 | 628 | 322 | ALM |
| 2.0 i | 1E7/3/5 | E | 1984 | 2E,ADY,AGG | A | | | 09/93 ▸ 02/98 | 076121253 | | 480 | 550 | CBS |
| 2.0 i | 1E7/3/5 | E | 1984 | 2E,ADY | A | | TSW | 09/93 ▸ 12/95 | 1H0121253H | 731025 | 628 | 322 | ALM |
| 1.9 TDi | 1E7/3/5 | D | 1896 | 1Z,AFN,AHU,ALE | M | + | TSW | 08/95 ▸ 12/97 | 1H0121253BA | 731032 | 628 | 377.5 | ALM |
| 1.9 TDi | 1E7/3/5 | D | 1896 | 1Z | M | - | TSW | 08/95 ▸ 06/96 | 1H0121253D | 731025 | 628 | 322 | ALM |
| 1.9 TDi | 1E7/3/5 | D | 1896 | 1Z,AFN,AHU,ALE | M | | | 08/95 ▸ 02/98 | 076121253 | | 480 | 550 | CBS |
| 1.9 TDi | 1E7/3/5 | D | 1896 | AHU,ALE | M | | TSW | 08/96 ▸ 12/97 | 1H0121253D | 731025 | 628 | 322 | ALM |
| 1.9 TDi | 1E7/3/5 | D | 1896 | AFN | M | | TSW | 10/96 ▸ 12/97 | 1H0121253BC | 731127 | 628 | 377,5 | ALM |
| 1.9 TDi | 1E7/3/5 | D | 1896 | 1Z,AHU | A | + | TSW | 08/95 ▸ 12/97 | 1H0121253BA | 731032 | 628 | 377.5 | ALM |
| 1.9 TDi | 1E7/3/5 | D | 1896 | 1Z | A | - | TSW | 08/95 ▸ 06/96 | 1H0121253AE | 732437 | 628 | 377 | ALM |
| 1.9 TDi | 1E7/3/5 | D | 1896 | 1Z | A | - | TSW | 08/95 ▸ 06/96 | 1H0121253BC | 731127 | 628 | 377,5 | ALM |
| 1.9 TDi | 1E7/3/5 | D | 1896 | 1Z,AHU | A | | | 08/95 ▸ 12/97 | 076121253 | | 480 | 550 | CBS |
| 1.9 TDi | 1E7/3/5 | D | 1896 | AHU | A | | TSW | 07/96 ▸ 12/97 | 1H0121253BC | 731127 | 628 | 377,5 | ALM |

## GOLF III (91>97)

| | | | | | | | | | | | | | |
|---|---|---|---|---|---|---|---|---|---|---|---|---|---|
| 1.4,1.4 i | 1H1/0/2/3/B ; 1H5/0 2/B | E | 1390 | AEX | M | +/- | TSW | 07/95 ▸ 12/97 | 6N0121253B | 730503 | 430 | 322 | ALM |
| 1.4 i | 1H5/0/2/B | E | 1390 | APQ | M | | TSW | 12/97 ▸ 05/98 | 6N0121253B | 730503 | 430 | 322 | ALM |
| 1.4 | 1H1/2/3 | E | 1391 | ABD | M | +/- | TSW | 11/91 ▸ 06/95 | 6N0121253B | 730503 | 430 | 322 | ALM |
| 1.4 i | 1H52 | E | 1391 | ABD | M | - | TSW | 07/93 ▸ 07/95 | 6N0121253B | 730503 | 430 | 322 | ALM |
| 1.4 | 1H1/2/3 | E | 1391 | ABD | M | | TSW | 11/91 ▸ 06/95 | 6N0121253A | 730503 | 430 | 322 | ALM |
| 1.4 | 1H1/2/3 | E | 1391 | ABD | M | | TSW | 11/91 ▸ 06/95 | 6N0121253 | 730504 | 525 | 322 | ALM |

# VOLKSWAGEN (.../...)

## GOLF III (91>97) (.../...)

| Type Ctr. | | CC | | AC | | | OE | Valeo | DIM. | TECH |
|---|---|---|---|---|---|---|---|---|---|---|
| 1.6 1H1/2/3 | E | 1598 | AEA | M | +/- | TSW | 10/94 ▸ 06/95 | 6N0121253A | 730503 | 430 322 | ALM |
| 1.6 1H1/0/2/3 | E | 1598 | AEA,AEE | M | +/- | TSW | 10/94 ▸ 12/97 | 6N0121253B | 730503 | 430 322 | ALM |
| 1.6,1.6 i 1H1/0/2/3/5/B/E 1H5/0/2/3/5/B | E | 1598 | AEK,AFT,AKS | M | + | TSW | 11/91 ▸ 02/99 | 1H0121253BA | 731032 | 628 377.5 | ALM |
| 1.6 1H12 | E | 1598 | AEK | M | - | TSW | 11/91 ▸ 06/92 | 1HM121253D | 731268 | 628 377,5 | ALM |
| 1.6,1.6 i 1H1/0/2/3/5 ; 1H5/0 2/3/5/B | E | 1598 | AEK,AFT,AKS | M | - | TSW | 10/94 ▸ 02/99 | 1H0121253D | 731025 | 628 322 | ALM |
| 1.6 1H12 | E | 1598 | AEK | M | | TSW | 11/91 ▸ 06/92 | 1H0121253R | 730505 | 525 322 | ALM |
| 1.6 1H1/2/3 | E | 1598 | ABU | M | | TSW | 09/92 ▸ 09/94 | 6N0121253A | 730503 | 430 322 | ALM |
| 1.6 i 1H5B ; 1H1/0/2/3/5/B/E | E | 1598 | AEK,AFT | M | | TSW | 07/95 ▸ 12/97 | 1H0121253D | 731025 | 628 322 | ALM |
| 1.6 i 1H5/0/2/3/5/B | E | 1598 | AEK,AFT,AKS | M | | TSW | 07/95 ▸ 02/99 | 1H0121253AE | 732437 | 628 377 | ALM |
| 1.6 i 1H1/0/2/3/B ; 1H5/0/2/3/B | E | 1598 | AEK,AFT | A | + | TSW | 10/94 ▸ 02/99 | 1H0121253BA | 731032 | 628 377.5 | ALM |
| 1.6 i 1H1/2/3 ; 1H5/0/2/3/B | E | 1598 | AEK,AFT | A | - | TSW | 10/94 ▸ 02/99 | 1H0121253H | 731025 | 628 322 | ALM |
| 1.6 i 1H12 | E | 1598 | AEK | A | | TSW | 10/94 ▸ 12/95 | 1H0121253D | 731025 | 628 322 | ALM |
| 1.6 i 1H5/0/2/3/B TW-000 001 ▸ | E | 1598 | AEK,AFT | A | | TSW | 07/95 ▸ 02/99 | 1H0121253AE | 732437 | 628 377 | ALM |
| 1.6 i 1H1/0/2/3/B | E | 1598 | AFT | A | | TSW | 12/95 ▸ 12/97 | 1H0121253H | 731025 | 628 322 | ALM |
| 1.6 i 1H5/2/3/5 ▸ SW-700 000 | E | 1598 | AEK | M | | TSW | 10/94 ▸ 07/95 | 1H0121253BC | 731127 | 628 377,5 | ALM |
| 1.6 i 1H5/2/3 ▸ SW-700 000 | E | 1598 | AEK | A | | TSW | 01/95 ▸ 07/95 | 1H0121253BC | 731127 | 628 377,5 | ALM |
| 1.8,1.8 i 1H1/0/2/3/5 ; 1H5/0 2/3/5 | E | 1781 | AAM,ABS,ACC,ADZ,ANN,ANP | M | + | TSW | 11/91 ▸ 04/99 | 1H0121253BA | 731032 | 628 377.5 | ALM |
| 1.8,1.8 i 1H1/0/2/3/5 ; 1H5/0 2/3/5 | E | 1781 | AAM,ABS,ADZ | M | - | TSW | 11/91 ▸ 02/99 | 1H0121253R | 730505 | 525 322 | ALM |
| 1.8 1H12 | E | 1781 | ACC | M | - | TSW | 12/94 ▸ 12/97 | 1H0121253D | 731025 | 628 322 | ALM |
| 1.8 i 1H1/0/2/3 ; 1H5/0/2/3 | E | 1781 | ABS,ADZ | M | | TSW | 01/93 ▸ 04/99 | 1H0121253H | 731025 | 628 322 | ALM |
| 1.8 i 1H5/0/2/3/5 | E | 1781 | AAM,ABS,ADZ,ANN,ANP | M | | TSW | 07/93 ▸ 02/99 | 1H0121253AE | 732437 | 628 377 | ALM |
| 1.8 i 1H5/0/2/3/5 | E | 1781 | ABS,ANN,ANP | M | | TSW | 07/94 ▸ 02/99 | 1H0121253R | 730505 | 525 322 | ALM |
| 1.8,1.8 i 1H1/0/2/3 ; 1H5/0/2 3 | E | 1781 | AAM,ABS,ADZ,ANN,ANP | A | + | TSW | 11/91 ▸ 02/99 | 1H0121253BA | 731032 | 628 377.5 | ALM |
| 1.8 i 1H5/0/2/3 | E | 1781 | ADZ | A | + | TSW | 10/94 ▸ 02/99 | 1H0121253H | 731025 | 628 322 | ALM |
| 1.8,1.8 i 1H1/0/2/3 ; 1H5/0/2 3 | E | 1781 | AAM,ABS,ADZ | A | - | TSW | 11/91 ▸ 02/99 | 1H0121253H | 731025 | 628 322 | ALM |
| 1.8 i 1H5/0/2/3 TW-000 001 ▸ | E | 1781 | AAM,ABS,ADZ,ANN,ANP | A | | TSW | 07/93 ▸ 02/99 | 1H0121253AE | 732437 | 628 377 | ALM |
| 1.8 i 1H5/0/2/3 | E | 1781 | ABS,ANN,ANP | A | | TSW | 07/94 ▸ 02/99 | 1H0121253D | 731025 | 628 322 | ALM |
| 1.8 i 1H5/2/3/5 ▸ SW-700 000 | E | 1781 | AAM,ABS,ADZ | M | | TSW | 07/94 ▸ 07/95 | 1H0121253BC | 731127 | 628 377,5 | ALM |
| 1.8 i 1H5/2/3 ▸ SW-700 000 | E | 1781 | AAM,ABS,ADZ | A | | TSW | 07/94 ▸ 07/95 | 1H0121253BC | 731127 | 628 377,5 | ALM |
| 2.0 16V,2.0 E,2.0 i 1H33 ; 1H1/0/2/3/5 6 ; 1H5/0/2/3/5 | E | 1984 | 2E,ABF,ADY,AEP,AGG,AKR | M | + | TSW | 11/91 ▸ 04/99 | 1H0121253BA | 731032 | 628 377.5 | ALM |
| 2.0 16V,2.0 E,2.0 i 1H33 ; 1H1/0/2/3/5 6 ; 1H5/0/2/3/5 | E | 1984 | 2E,ABF,ADY,AEP,AGG,AKR | M | - | TSW | 11/91 ▸ 04/99 | 1H0121253D | 731025 | 628 322 | ALM |
| 2.0 i 1H3/3 ; 1H5/0/2/3/5 | E | 1984 | 2E,ADY,AGG,AKR | M | | TSW | 07/93 ▸ 04/99 | 1H0121253AE | 732437 | 628 377 | ALM |
| 2.0 i 1H1/0/2/3 ; 1H5/0/2/3/5 | E | 1984 | 2E,AGG | M | | TSW | 07/94 ▸ 04/99 | 1H0121253D | 731025 | 628 322 | ALM |
| 2.0 E,2.0 i 1H1/0/2/3 ; 1H5/0/2 3 | E | 1984 | 2E,ADY,AEP,AGG | A | + | TSW | 11/91 ▸ 02/99 | 1H0121253BA | 731032 | 628 377.5 | ALM |
| 2.0 E,2.0 i 1H1/2/3 ; 1H5/0/2/3 | E | 1984 | 2E,ADY,AEP,AGG | A | - | TSW | 11/91 ▸ 02/99 | 1H0121253H | 731025 | 628 322 | ALM |
| 2.0 E 1H1/0/2/3 | E | 1984 | ADY | A | - | TSW | 10/94 ▸ 12/97 | 1H0121253R | 730505 | 525 322 | ALM |
| 2.0 i 1H5/0/2/3 | E | 1984 | 2E,ADY,AGG | A | | TSW | 07/93 ▸ 02/99 | 1H0121253AE | 732437 | 628 377 | ALM |
| 2.0 E,2.0 i 1H53 ; 1H1/0/2/3 | E | 1984 | 2E,ADY | A | | TSW | 07/94 ▸ 12/97 | 1H0121253H | 731025 | 628 322 | ALM |
| 2.0 i 1H3/3 ; 1H5/3/5 ▸ SW-700 000 | E | 1984 | 2E,ADY,AGG | M | | TSW | 07/94 ▸ 07/95 | 1H0121253BC | 731127 | 628 377,5 | ALM |
| 2.0 i 1H53 ▸ SW-700 000 | E | 1984 | 2E,ADY | A | | TSW | 07/94 ▸ 07/95 | 1H0121253BC | 731127 | 628 377,5 | ALM |
| 2.8 VR6 1H16 | E | 2792 | AAA | M | +/- | TSW | 01/92 ▸ 12/97 | 1H0121253BE | 730955 | 628 377,5 | ALM |
| 2.8 VR6 1H16 | E | 2792 | AAA | M | + | TSW | 01/92 ▸ 12/97 | 1H0121253CB | 731267 | 628 377,5 | ALM |
| 2.8 VR6 1H16 | E | 2792 | AAA | A | +/- | TSW | 07/92 ▸ 12/97 | 1H0121253CB | 731267 | 628 377,5 | ALM |
| 2.8 VR6 1H16 | E | 2792 | AAA | A | +/- | TSW | 07/92 ▸ 12/97 | 1H0121253BE | 730955 | 628 377,5 | ALM |
| 2.9 i VR6 1H56 ; 1H1/3/6 | E | 2861 | ABV | M | + | TSW | 01/94 ▸ 04/99 | 1H0121253CB | 731267 | 628 377,5 | ALM |
| 2.9 i VR6 1H56 ; 1H1/3/6 | E | 2861 | ABV | M | | TSW | 01/94 ▸ 04/99 | 1H0121253BE | 730955 | 628 377,5 | ALM |
| 1.9 D,1.9 D Ecomatic 1H1/0/2/3 | D | 1896 | 1Y | M | +/- | TSW | 11/91 ▸ 12/97 | 1H0121253AE | 732437 | 628 377 | ALM |
| 1.9 D,1.9 D Ecomatic 1H1/0/2/3 | D | 1896 | 1Y | M | +/- | TSW | 11/91 ▸ 12/97 | 1H0121253BC | 731127 | 628 377,5 | ALM |
| 1.9 TDi 1H0/0 ; 1H1/0/2/3/5 1H5/0/2/3/5 | D | 1896 | 1Z,AFN,AHU,ALE | M | + | TSW | 06/93 ▸ 02/99 | 1H0121253BA | 731032 | 628 377.5 | ALM |
| 1.9 D,1.9 TD,1.9 TDi 1H0/0 ; 1H1/0/2/3/5 1H5/0/2/3/5 | D | 1896 | 1Y,AAZ,AFN | M | - | TSW | 11/91 ▸ 02/99 | 1H0121253AE | 732437 | 628 377 | ALM |

Radiator Radiateur Motorkühler Radiatore di raffreddamento Radiator Radyatör Radiador Радиатор vízhűtő Vodní chladič Radiator Ψυγείο



• **New** Nouveau **Nuevo** Novo **Nuovo** Nieuw **Neu** Nowość **Yeni** Новый Νέο **Nový**

## GOLF III (91>97) (.../...)

| | | | CC | | | AC | | | OE | Valeo | DIM. | TECH |
|---|---|---|---|---|---|---|---|---|---|---|---|---|
| 1.9 D,1.9 TD,1.9 TDi | 1H0/0 ; 1H1/0/2/3/5 1H5/0/2/3/5 | D | 1896 | 1Y,AAZ,AFN | M | - | TSW | 11/91 ▸ 02/99 | 1H0121253BC | **731127** | 628 377,5 | ALM |
| 1.9 SDi,1.9 SDi Ecomatic 1.9 TDi | 1H1/0/2/3/5 ; 1H5/0 2/3/5 | D | 1896 | 1Z,AEY,AHU,ALE | M | - | TSW | 06/93 ▸ 02/99 | 1H0121253D | **731025** | 628 322 | ALM |
| 1.9 D,1.9 SDi,1.9 TD 1.9 TDi | 1H1/0/2/3 ; 1H5/0/2 3/5 | D | 1896 | 1Y,1Z,AAZ,AEY,AFN,AHU,ALE | M | | TSW | 07/93 ▸ 04/99 | 1H0121253AE | **732437** | 628 377 | ALM |
| 1.9 TDi | 1H50 | D | 1896 | ALE | M | | TSW | 04/97 ▸ 02/99 | 1H0121253D | **731025** | 628 322 | ALM |
| 1.9 TDi | 1H1/0/2/3 ; 1H5/0/2 3/B | D | 1896 | 1Z,AFN,AHU | A | + | TSW | 06/93 ▸ 02/99 | 1H0121253BA | **731032** | 628 377.5 | ALM |
| 1.9 TD,1.9 TDi | 1H1/0/2/3 ; 1H5/0/2 3 | D | 1896 | AAZ,AFN | A | - | TSW | 11/91 ▸ 02/99 | 1H0121253BC | **731127** | 628 377,5 | ALM |
| 1.9 TD,1.9 TDi | 1H1/0/2/3 ; 1H5/0/2 3 | D | 1896 | AAZ,AFN | A | - | TSW | 11/91 ▸ 02/99 | 1H0121253AE | **732437** | 628 377 | ALM |
| 1.9 TDi | 1H1/0/2/3 ; 1H5/0/2 3/B | D | 1896 | 1Z,AHU | A | - | TSW | 06/93 ▸ 02/99 | 1H0121253D | **731025** | 628 322 | ALM |
| 1.9 TDi | 1H5/0/2/3/B | D | 1896 | 1Z,AFN,AHU | A | | TSW | 07/93 ▸ 02/99 | 1H0121253AE | **732437** | 628 377 | ALM |
| 1.9 TDi | 1H5/2/3 | D | 1896 | 1Z | A | | TSW | 01/95 ▸ 07/96 | 1H0121253D | **731025** | 628 322 | ALM |
| 1.9 D,1.9 TD,1.9 TDi ▸ SW-700 000 | 1H1/0/2/3 ; 1H5/0/2 3/5 | D | 1896 | 1Y,1Z,AAZ,AHU,ALE | M | | TSW | 07/94 ▸ 04/99 | 1H0121253BC | **731127** | 628 377,5 | ALM |
| 1.9 TDi | 1H5/2/3 | D | 1896 | 1Z | A | | TSW | 01/95 ▸ 07/95 | 1H0121253BC | **731127** | 628 377,5 | ALM |

## GOLF IV (97>2003)

| | | | | | | | | | | | | |
|---|---|---|---|---|---|---|---|---|---|---|---|---|
| 2.0 i | 1J1/0/1/2/3 ; 1J5/0/1/2/3 | F | 1984 | BEH | M | +/- | TSW | 05/02 ▸ 06/06 | 1J0121253N | **732175** | 650 414,5 | ALM |
| 2.0 i | 1J1/0/1/2/3 | F | 1984 | BEH | M | +/- | TSW | 05/02 ▸ 05/03 | 1J0121253AD | **731606** | 414,5 650 | ALM |
| 2.0 i | 1J5/0/1/2/3 | F | 1984 | BEH | M | + | TSW | 05/02 ▸ 06/06 | 1J0121253AD | **731606** | 414,5 650 | ALM |
| 1.4 i 16V | 1J12 | E | 1390 | AXP | M | +/- | TSW | 05/00 ▸ 10/01 | 1J0121253N | **732175** | 650 414,5 | ALM |
| 1.4 i 16V | 1J12 ; 1J52 | E | 1390 | AHW,AKQ | M | + | TSW | 10/97 ▸ | 1J0121253P | **731606** | 414,5 650 | ALM |
| 1.4 i 16V | 1J1/0/1/2 ; 1J5/0/1 2/3 | E | 1390 | AHW,AKQ,APE,AXP,BCA | M | + | TSW | 10/97 ▸ 06/06 | 1J0121253AD | **731606** | 414,5 650 | ALM |
| 1.4 i 16V | 1J1/0/1/2 ; 1J5/0/1 2/3 | E | 1390 | AHW,AKQ,APE,AXP,BCA | M | - | TSW | 10/97 ▸ | 1J0121253G | •**736083** | 430 414 | ALM |
| 1.4 i 16V | 1J1/0/1/2 ; 1J5/0/1 2/3 | E | 1390 | AHW,AKQ,APE,AXP,BCA | M | - | TSW | 10/97 ▸ | 1J0121253G | **731607** | 430 414 | ALM |
| 1.4 i 16V | 1J52 | E | 1390 | AHW | M | - | TSW | 05/00 ▸ | 1J0121253P | **731606** | 414,5 650 | ALM |
| 1.4 i 16V | 1J1/2 ; 1J5/2/3 | E | 1390 | AKQ | M | | TSW | 10/97 ▸ 05/00 | 1J0121253P | **731606** | 414,5 650 | ALM |
| 1.4 i 16V | 1J1/0/1/2 ; 1J5/0/1 2 | E | 1390 | AHW,BCA | M | | TSW | 05/00 ▸ 06/06 | 1J0121253G | •**736083** | 430 414 | ALM |
| 1.4 i 16V | 1J1/0/1/2 ; 1J5/0/1 2 | E | 1390 | AHW,BCA | M | | TSW | 05/00 ▸ 06/06 | 1J0121253G | **731607** | 430 414 | ALM |
| 1.4 i 16V | 1J12 | E | 1390 | AHW | A | +/- | TSW | 10/97 ▸ 05/00 | 1J0121253AD | **731606** | 414,5 650 | ALM |
| 1.4 i 16V | 1J12 | E | 1390 | AHW | A | + | TSW | 10/97 ▸ | 1J0121253P | **731606** | 414,5 650 | ALM |
| 1.4 i 16V | 1J12 | E | 1390 | AHW | A | - | TSW | 10/97 ▸ | 1J0121253G | •**736083** | 430 414 | ALM |
| 1.4 i 16V | 1J12 | E | 1390 | AHW | A | - | TSW | 10/97 ▸ | 1J0121253G | **731607** | 430 414 | ALM |
| 1.6 FSI 16V,1.6 i 1.6 i 16V | 1J1/0/1/2/3/5 ; 1J5 0/1/2/3/5 | E | 1595 | AEH,AKL,APF,ATN,AUS,AVU,AZD BAD,BCB,BFQ | M | +/- | TSW | 10/97 ▸ 06/06 | 1J0121253N | **732175** | 650 414,5 | ALM |
| 1.6 i | 1J1/2/5 ; 1J5/2/5 | E | 1595 | AEH,AKL,APF | M | + | TSW | 10/97 ▸ | 1J0121253P | **731606** | 414,5 650 | ALM |
| 1.6 FSI 16V,1.6 i 1.6 i 16V | 1J1/0/1/2/3/5 ; 1J5 0/1/2/3/5 | E | 1595 | AEH,AKL,ATN,AUS,AVU,AZD,BAD BCB,BFQ | M | + | TSW | 10/97 ▸ 06/06 | 1J0121253AD | **731606** | 414,5 650 | ALM |
| 1.6 i | 1J1/2/5 ; 1J5/2/5 | E | 1595 | AEH,AKL,APF | M | - | TSW | 10/97 ▸ | 1J0121253P | **731606** | 414,5 650 | ALM |
| 1.6 i | 1J50 | E | 1595 | AKL | M | - | TSW | 05/00 ▸ 04/02 | 1J0121253N | **732175** | 650 414,5 | ALM |
| 1.6 i | 1J15 | E | 1595 | AEH | M | | TSW | 01/98 ▸ 05/00 | 1J0121253P | **731606** | 414,5 650 | ALM |
| 1.6 i | 1J1/0/1/2/3/5 ; 1J5/0/1/2/3/5 | E | 1595 | AEH,AKL,APF,AVU | A | +/- | TSW | 10/97 ▸ 05/04 | 1J0121253N | **732175** | 650 414,5 | ALM |
| 1.6 i | 1J1/0/1/2/3/5 ; 1J5/0/1/2/3/5 | E | 1595 | AEH,AKL,BFQ | A | +/- | TSW | 10/97 ▸ 06/06 | 1J0121253AD | **731606** | 414,5 650 | ALM |
| 1.6 i | 1J1/2/5 ; 1J5/2/5 | E | 1595 | AEH,AKL | A | + | TSW | 10/97 ▸ 05/00 | 1J0121253P | **731606** | 414,5 650 | ALM |
| 1.6 i | 1J1/0/1/2/3 ; 1J5/0/1/2/3 | E | 1595 | AEH,AVU | A | + | TSW | 05/00 ▸ 04/02 | 1J0121253AD | **731606** | 414,5 650 | ALM |
| 1.6 i | 1J15 ; 1J52 | E | 1595 | AEH,AKL | A | - | TSW | 10/97 ▸ 05/00 | 1J0121253P | **731606** | 414,5 650 | ALM |
| 1.6 i | 1J11 | E | 1595 | APF | A | - | TSW | 05/00 ▸ 08/00 | 1J0121253N | **732175** | 650 414,5 | ALM |
| 1.6 i | 1J1/2/5 | E | 1595 | AEH | A | | TSW | 01/98 ▸ 05/00 | 1J0121253P | **731606** | 414,5 650 | ALM |
| 1.6 i | 1J1/0/1/2/3 ; 1J5/0/1/2/3 | E | 1595 | BFQ | A | | TSW | 05/02 ▸ 06/06 | 1J0121253N | **732175** | 650 414,5 | ALM |
| 1.8 i 20V | 1J1/0/1/2/3/5/6 1J5/0/1/2/3/5 | E | 1781 | AGN | M | +/- | TSW | 10/97 ▸ 10/00 | 1J0121253N | **732175** | 650 414,5 | ALM |
| 1.8 i,1.8 i Turbo 1.8 i Turbo 20V | 1J1/2/3/5/6 ; 1J5/2 3 | E | 1781 | AGU,ARZ,AUM,AUQ | M | +/- | TSW | 10/97 ▸ 05/06 | 1J0121253AD | **731606** | 414,5 650 | ALM |
| 1.8 i 20V,1.8 i Turbo 20V | 1J16 ; 1J52 | E | 1781 | AGN,AGU | M | + | TSW | 10/97 ▸ 05/00 | 1J0121253P | **731606** | 414,5 650 | ALM |
| 1.8 i 20V,1.8 i Turbo 20V | 1J1/0/1/2/3/5/6 1J5/0/1/2/3/5 | E | 1781 | AGN,AUM | M | + | TSW | 10/97 ▸ 05/04 | 1J0121253AD | **731606** | 414,5 650 | ALM |
| 1.8 i 20V | 1J55 | E | 1781 | AGN | M | - | TSW | 05/99 ▸ 05/00 | 1J0121253P | **731606** | 414,5 650 | ALM |

# VOLKSWAGEN (.../...)

## GOLF IV (97>2003) (.../...)

| Type Ctr. | | CC | | AC | | 2+3 | OE | Valeo | DIM. | TECH |
|---|---|---|---|---|---|---|---|---|---|---|
| 1.8 i,1.8 i 20V<br>1.8 i Turbo<br>1.8 i Turbo 20V | 1J53 ; 1J1/2/3/5/6 | E | 1781 | AGN,AGU,ARZ | M | | TSW | 10/97 ▸ | 1J0121253P | **731606** | 414,5 650 | ALM |
| 1.8 i 20V,1.8 i Turbo 20V | 1J1/2/3/5/6 ; 1J5/0/1/2/3/5 | E | 1781 | AGN,AGU,AUM | A | +/- | TSW | 10/97 ▸ 05/06 | 1J0121253AD | **731606** | 414,5 650 | ALM |
| 1.8 i 20V | 1J1/2/5 ; 1J5/0/1/2/3/5 | E | 1781 | AGN | A | +/- | TSW | 10/97 ▸ 10/00 | 1J0121253N | **732175** | 650 414,5 | ALM |
| 1.8 i 20V | 1J15 | E | 1781 | AGN | A | + | TSW | 10/97 ▸ 04/99 | 1J0121253P | **731606** | 414,5 650 | ALM |
| 1.8 i Turbo 20V | 1J1/5/6 | E | 1781 | AGU | A | - | TSW | 08/98 ▸ 05/00 | 1J0121253P | **731606** | 414,5 650 | ALM |
| 1.8 i 20V | 1J1/2/5 | E | 1781 | AGN | A | | TSW | 10/97 ▸ 04/99 | 1J0121253P | **731606** | 414,5 650 | ALM |
| 2.0 i | 1J1/0/1/2/3/5/6 ; 1J5/0/1/2/3/5 | E | 1984 | APK,AQY,AZH,AZJ | M | +/- | TSW | 08/98 ▸ 06/06 | 1J0121253N | **732175** | 650 414,5 | ALM |
| 2.0 i | 1J1/0/1/2/3/5/6 ; 1J5/0/1/2/3/5 | E | 1984 | APK,AQY,AZH,AZJ | M | + | TSW | 08/98 ▸ 06/06 | 1J0121253AD | **731606** | 414,5 650 | ALM |
| 2.0 i | 1J52 | E | 1984 | AQY | M | + | TSW | 05/99 ▸ 05/00 | 1J0121253P | **731606** | 414,5 650 | ALM |
| 2.0 i | 1J16 ; 1J55 | E | 1984 | APK,AZJ | M | - | TSW | 05/99 ▸ 05/00 | 1J0121253P | **731606** | 414,5 650 | ALM |
| 2.0 i | 1J10 | E | 1984 | AZJ | M | - | TSW | 05/01 ▸ 06/05 | 1J0121253N | **732175** | 650 414,5 | ALM |
| 2.0 i | 1J16 | E | 1984 | AZJ | M | - | TSW | 05/02 ▸ 05/99 | 1J0121253AD | **731606** | 414,5 650 | ALM |
| 2.0 i | 1J16 | E | 1984 | AZG | M | | TSW | 05/01 ▸ 04/02 | 1J0121253AD | **731606** | 414,5 650 | ALM |
| 2.0 i | 1J16 | E | 1984 | AZG | M | | TSW | 05/01 ▸ 04/02 | 1J0121253N | **732175** | 650 414,5 | ALM |
| 2.0 i | 1J25 ; 1J1/0/1/2/3/5 ; 1J5/0/1/2/3/5 | E | 1984 | APK,AQY,AZH,AZJ | A | +/- | TSW | 08/98 ▸ 06/06 | 1J0121253AD | **731606** | 414,5 650 | ALM |
| 2.0 i | 1J25 ; 1J1/0/1/2/3/5 ; 1J5/0/1/2/3/5 | E | 1984 | APK,AQY,AZH,AZJ | A | +/- | TSW | 08/98 ▸ 06/06 | 1J0121253N | **732175** | 650 414,5 | ALM |
| 2.0 i | 1J5/2/5 | E | 1984 | APK,AQY | A | + | TSW | 05/99 ▸ 05/00 | 1J0121253P | **731606** | 414,5 650 | ALM |
| 2.0 i | 1J5/2/5 | E | 1984 | APK,AQY | A | - | TSW | 05/99 ▸ 05/00 | 1J0121253P | **731606** | 414,5 650 | ALM |
| 2.3 i VR5 20V | 1J1/0/1/2/3/5/6<br>1J5/3/5 | E | 2324 | AGZ | M | +/- | TSW | 10/97 ▸ 02/01 | 1J0121253AD | **731606** | 414,5 650 | ALM |
| 2.3 i VR5 20V | 1J53 ; 1J1/3/6 | E | 2324 | AQN | M | +/- | TSW | 09/00 ▸ 06/05 | 1J0121253S | **732427** | 648,6 414 | ALB |
| 2.3 i VR5 20V | 1J55 | E | 2324 | AGZ | M | + | TSW | 05/99 ▸ 05/00 | 1J0121253P | **731606** | 414,5 650 | ALM |
| 2.3 i VR5 20V | 1J1/5/6 | E | 2324 | AGZ | M | - | TSW | 10/97 ▸ 05/00 | 1J0121253P | **731606** | 414,5 650 | ALM |
| 2.3 i VR5 20V | 1J1/0/1/2/3/5 ; 1J5/3/5 | E | 2324 | AGZ | A | +/- | TSW | 10/97 ▸ 02/01 | 1J0121253AD | **731606** | 414,5 650 | ALM |
| 2.3 i VR5 20V | 1J13 ; 1J53 | E | 2324 | AQN | A | +/- | TSW | 11/00 ▸ 05/06 | 1J0121253S | **732427** | 648,6 414 | ALB |
| 2.3 i VR5 20V | 1J55 | E | 2324 | AGZ | A | + | TSW | 05/99 ▸ 05/00 | 1J0121253P | **731606** | 414,5 650 | ALM |
| 2.3 i VR5 20V | 1J15 | E | 2324 | AGZ | A | - | TSW | 10/97 ▸ 05/00 | 1J0121253P | **731606** | 414,5 650 | ALM |
| 2.3 i VR5 20V | 1J53 | E | 2324 | AQN | A | | TSW | 09/00 ▸ 04/02 | 1J0121253S | **732427** | 648,6 414 | ALB |
| 2.8 i V6 24V<br>2.8 i VR6 24V | 1J1/3/5/6 ; 1J5/3/5/6 | E | 2792 | AQP,AUE,BDE | M | +/- | TSW | 05/99 ▸ 06/05 | 1J0121253S | **732427** | 648,6 414 | ALB |
| 2.8 i V6 24V<br>2.8 i VR6 24V | 1J5/3/5/6 | E | 2792 | AQP,AUE,BDE | A | +/- | TSW | 05/99 ▸ 04/02 | 1J0121253S | **732427** | 648,6 414 | ALB |
| 3.2 i V6 | 1J1R | E | 3189 | BFH | M | +/- | TSW | 06/02 ▸ 05/04 | 1J0121253S | **732427** | 648,6 414 | ALB |
| 3.2 i V6 | 1J1R | E | 3189 | BFH | A | +/- | TSW | 06/02 ▸ 05/04 | 1J0121253S | **732427** | 648,6 414 | ALB |
| 3.2 i V6 | 1J1R | E | 3189 | BFH | A | | TSW | 09/03 ▸ 05/04 | 1J0121253S | **732427** | 648,6 414 | ALB |
| 1.9 TDi | 1J1/0/1/2/3/5/6<br>1J5/0/1/2/3/5 | D | 1896 | AGR,ATD,AUY | M | +/- | TSW | 10/97 ▸ 06/06 | 1J0121253AD | **731606** | 414,5 650 | ALM |
| 1.9 SDi,1.9 TDi | 1J1/0/1/2/3/5/6<br>1J5/0/1/2/3/5 | D | 1896 | AGP,AGR,AHF,AJM,ALH,AQM,ASV<br>ASZ,ATD,AUY,AXR | M | +/- | TSW | 10/97 ▸ 06/06 | 1J0121253N | **732175** | 650 414,5 | ALM |
| 1.9 TDi | 1J53 ; 1J1/3/6 | D | 1896 | ARL | M | +/- | TSW | 09/00 ▸ 05/06 | 1J0121253AC | **732867** | 648,6 414,5 | ALB |
| 1.9 SDi,1.9 TDi | 1J1/0/1/2/3/5/6<br>1J5/0/1/2/3/5 | D | 1896 | AGP,AHF,AJM,ALH,AQM,ASV,ASZ<br>AXR | M | + | TSW | 10/97 ▸ 06/06 | 1J0121253AD | **731606** | 414,5 650 | ALM |
| 1.9 SDi,1.9 TDi | 1J5/2/5 | D | 1896 | AGR,AHF,AJM,ALH,AQM,AUY | M | + | TSW | 05/99 ▸ | 1J0121253P | **731606** | 414,5 650 | ALM |
| 1.9 TDi | 1J5/2/5 | D | 1896 | AGR,AHF,AJM,ALH | M | - | TSW | 05/99 ▸ | 1J0121253P | **731606** | 414,5 650 | ALM |
| 1.9 TDi | 1J52 | D | 1896 | AHF | M | - | TSW | 05/99 ▸ 05/00 | 1J0121253N | **732175** | 650 414,5 | ALM |
| 1.9 TDi | 1J1/2/5 | D | 1896 | AGR,ALH | M | | TSW | 10/97 ▸ 05/99 | 1J0121253N | **732175** | 650 414,5 | ALM |
| 1.9 TDi | 1J1/0/1/2/3/5 ; 1J5/0/1/2/3/5 | D | 1896 | AGR,AHF,ALH,ASZ,ATD,AUY | A | +/- | TSW | 10/97 ▸ 05/06 | 1J0121253AD | **731606** | 414,5 650 | ALM |
| 1.9 TDi | 1J1/0/1/2/3/5 ; 1J5/0/1/2/3/5 | D | 1896 | AGR,AHF,ALH,ASZ,ATD,AUY | A | +/- | TSW | 10/97 ▸ 05/06 | 1J0121253N | **732175** | 650 414,5 | ALM |
| 1.9 TDi | 1J5/2/5 | D | 1896 | AGR,ALH | A | + | TSW | 05/99 ▸ 05/00 | 1J0121253P | **731606** | 414,5 650 | ALM |
| 1.9 TDi | 1J5/2/5 | D | 1896 | AGR,AHF,ALH | A | - | TSW | 05/99 ▸ 05/00 | 1J0121253P | **731606** | 414,5 650 | ALM |
| 1.9 TDi | 1J12 | D | 1896 | ATD,AUY | A | - | TSW | 02/00 ▸ 05/04 | 1J0121253N | **732175** | 650 414,5 | ALM |

## GOLF V (2003>)

| | | | | | | | | | | | | |
|---|---|---|---|---|---|---|---|---|---|---|---|---|
| 1.4 FSi 16V,1.4 i 16V | 1K1/0/1/2 | E | 1390 | BCA,BKG,BLN,BUD | M | +/- | TSW | 10/03 ▸ | 1K0121251P | **734332** | 640 414,5 | ALM |
| 1.4 FSi 16V,1.4 i 16V | 1K1/0/1/2 | E | 1390 | BCA,BKG,BLN,BUD | M | +/- | TSW | 10/03 ▸ | 1K0121251BQ | **734335** | 640 414,5 | ALM |
| 1.4 FSi 16V,1.4 i 16V | 1K1/0/1/2 | E | 1390 | BCA,BKG,BLN,BUD | M | +/- | TSW | 10/03 ▸ 11/08 | 1K0121251BR | **734335** | 640 414,5 | ALM |
| 1.4 FSi 16V | 1K1/0/1/B ; 1K5/0/1/2 | E | 1390 | CAXA | M | +/- | TSW | 06/07 ▸ | 1K0121253AP | **732872** | 650 414,5 | ALM |
| 1.4 FSi 16V | 1K1/0/1/2 | E | 1390 | BKG | M | + | TSW | 10/03 ▸ 12/04 | 1K0121251CJ | **735120** | 650 414,5 | ALM |
| 1.4 FSi 16V | 1K1/0/1/B ; 1K5/0/1/2 | E | 1390 | CAXA | M | + | TSW | 06/07 ▸ | 1K0121253H | **732872** | 650 414,5 | ALM |
| 1.4 i 16V | 1K1/0/1 | E | 1390 | BCA,BUD | M | | TSW | 10/03 ▸ 11/08 | 1K0121251P | **734332** | 640 414,5 | ALM |

Radiator Ψυγείο Vodní chladič Radiator Радиатор vízhűtő Radiador Radiator Radyatör Radiator Radiatore di raffreddamento Motorkühler Radiateur Radiator



• **New** Nouveau **Nuevo** Novo **Nuovo** Nieuw **Neu** Nowość **Yeni** Новый Νέο **Nový**

## GOLF V (2003>) (.../...)

| Type Ctr. | | CC | | AC | | | OE | Valeo | DIM. | TECH |
|---|---|---|---|---|---|---|---|---|---|---|
| 1.4 FSi 16V 1K1/0/1/B ; 1K5/0/1 2 | E | 1390 | CAXA | M | | TSW | 06/07 ▸ 11/08 | 1K0121253BB | **732872** | 650 414,5 | ALM |
| 1.4 FSi 16V 1K1/0/1/B ; 1K5/0/1 2 | E | 1390 | CAXA | A | +/- | TSW | 11/07 ▸ | 1K0121253BB | **732872** | 650 414,5 | ALM |
| 1.4 FSi 16V,1.4 TFSi 16V 1.4 TSi 16V 1K1/0/1/2/B ; 1K5/1 2 | E | 1390 | BLG,BMY | A | + | | 05/06 ▸ 11/08 | 1K0121251L | | | |
| 1.4 FSi 16V 1K1/0/1/B ; 1K5/0/1 2 | E | 1390 | CAXA | A | + | TSW | 11/07 ▸ | 1K0121253H | **732872** | 650 414,5 | ALM |
| 1.4 FSi 16V 1K1/0/1/B ; 1K5/0/1 2 | E | 1390 | CAXA | A | | TSW | 11/07 ▸ 11/08 | 1K0121253BB | **732872** | 650 414,5 | ALM |
| 1.6 i 1K1/0/1/2/B ; 1K5/0/1 | E | 1595 | BGU,BSE,BSF | M | +/- | TSW | 01/04 ▸ | 1K0121251P | **734332** | 640 414,5 | ALM |
| 1.6 i 1K1/0/1/2/B ; 1K5/0/1 | E | 1595 | BGU,BSE,BSF | M | +/- | TSW | 01/04 ▸ | 1K0121251BQ | **734335** | 640 414,5 | ALM |
| 1.6 i 1K51 ; 1K1/0/1/2/B | E | 1595 | BGU,BSE,BSF | M | +/- | TSW | 01/04 ▸ 11/08 | 1K0121251BR | **734335** | 640 414,5 | ALM |
| 1.6 i 1K1/0/1/2 | E | 1595 | BGU | M | + | TSW | 01/04 ▸ 06/05 | 1K0121251AR | **735120** | 650 414,5 | ALM |
| 1.6 i 1K1/1/B ; 1K5/0/1 | E | 1595 | BSE,BSF | M | + | TSW | 06/05 ▸ 11/08 | 1K0121251BR | **734335** | 640 414,5 | ALM |
| 1.6 i 1K1/0/1/2/B ; 1K5/0/1 | E | 1595 | BSE | M | + | TSW | 06/05 ▸ | 1K0121251F | **734335** | 640 414,5 | ALM |
| 1.6 i 1K1/B ; 1K5/0/1 | E | 1595 | BSF | M | + | TSW | 05/07 ▸ | 1K0121251BQ | **734335** | 640 414,5 | ALM |
| 1.6 i 1K1/B ; 1K5/0/1 | E | 1595 | BSF | M | + | TSW | 05/07 ▸ | 1K0121251P | **734332** | 640 414,5 | ALM |
| 1.6 i 1K1/0/1/2/B ; 1K5/0/1 | E | 1595 | BGU,BSE,BSF | M | | TSW | 01/04 ▸ 11/08 | 1K0121251P | **734332** | 640 414,5 | ALM |
| 1.6 i 1K1/0/1/2/B ; 1K5/0/1 | E | 1595 | BSE,BSF | M | | TSW | 06/05 ▸ 11/08 | 1K0121251F | **734335** | 640 414,5 | ALM |
| 1.6 i 1K1/0/1/2 | E | 1595 | BGU,BSE,BSF | A | +/- | TSW | 01/04 ▸ 11/08 | 1K0121251BR | **734335** | 640 414,5 | ALM |
| 1.6 i 1K1/0/1/2 | E | 1595 | BGU,BSE,BSF | A | +/- | TSW | 01/04 ▸ | 1K0121251P | **734332** | 640 414,5 | ALM |
| 1.6 i 1K1/0/1/2 | E | 1595 | BGU,BSE,BSF | A | +/- | TSW | 01/04 ▸ | 1K0121251BQ | **734335** | 640 414,5 | ALM |
| 1.6 i 1K1/0/1/2 | E | 1595 | BGU | A | + | TSW | 01/04 ▸ 06/05 | 1K0121251CJ | **735120** | 650 414,5 | ALM |
| 1.6 i 1K1/0/1/2/B ; 1K5/0/1/2 | E | 1595 | BSE | A | + | TSW | 06/05 ▸ | 1K0121251F | **734335** | 640 414,5 | ALM |
| 1.6 i 1K12 | E | 1595 | BSF | A | + | TSW | 06/05 ▸ 05/07 | 1K0121251P | **734332** | 640 414,5 | ALM |
| 1.6 i 1K12 | E | 1595 | BSF | A | + | TSW | 06/05 ▸ 05/07 | 1K0121251BQ | **734335** | 640 414,5 | ALM |
| 1.6 i 1K1/0/2/B ; 1K5/0/1 | E | 1595 | BSE,BSF | A | + | TSW | 06/05 ▸ 11/08 | 1K0121251BR | **734335** | 640 414,5 | ALM |
| 1.6 i 1K1/B ; 1K5/0/1/2 | E | 1595 | BSE,BSF | A | - | TSW | 05/07 ▸ | 1K0121251BQ | **734335** | 640 414,5 | ALM |
| 1.6 i 1K1/B ; 1K5/0/1/2 | E | 1595 | BSE,BSF | A | - | TSW | 05/07 ▸ 11/08 | 1K0121251BR | **734335** | 640 414,5 | ALM |
| 1.6 i 1K1/B ; 1K5/0/1/2 | E | 1595 | BSE,BSF | A | - | TSW | 05/07 ▸ | 1K0121251P | **734332** | 640 414,5 | ALM |
| 1.6 i 1K1/0/1/2/B ; 1K5/0/1/2 | E | 1595 | BGU,BSE,BSF | A | | TSW | 01/04 ▸ 11/08 | 1K0121251P | **734332** | 640 414,5 | ALM |
| 1.6 i 1K1/0/1/2/B ; 1K5/0/1/2 | E | 1595 | BSE,BSF | A | | TSW | 06/05 ▸ 11/08 | 1K0121251F | **734335** | 640 414,5 | ALM |
| 1.6 i 1K52 | E | 1595 | BSF | A | | TSW | 05/07 ▸ 05/08 | 1K0121251BR | **734335** | 640 414,5 | ALM |
| 1.6 FSi 16V 1K1/0/1/2 | E | 1598 | BAG,BLF,BLP | M | +/- | TSW | 10/03 ▸ | 1K0121251P | **734332** | 640 414,5 | ALM |
| 1.6 FSi 16V 1K1/0/1/2 | E | 1598 | BAG,BLF,BLP | M | +/- | TSW | 10/03 ▸ | 1K0121251BQ | **734335** | 640 414,5 | ALM |
| 1.6 FSi 16V 1K1/0/1/2/B | E | 1598 | BAG,BLF,BLP | M | +/- | TSW | 10/03 ▸ 07/08 | 1K0121251BR | **734335** | 640 414,5 | ALM |
| 1.6 FSi 16V 1K11 | E | 1598 | BLF | M | + | TSW | 01/05 ▸ 05/08 | 1K0121251CJ | **735120** | 650 414,5 | ALM |
| 1.6 FSi 16V 1K11 | E | 1598 | BLF | M | + | TSW | 01/05 ▸ | 1K0121251AR | **735120** | 650 414,5 | ALM |
| 1.6 FSi 16V 1K11 | E | 1598 | BLF | M | + | TSW | 01/05 ▸ | 1K0121251E | **734335** | 640 414,5 | ALM |
| 1.6 FSi 16V 1K1/0/1/B | E | 1598 | BLF | M | | TSW | 01/05 ▸ 07/08 | 1K0121251P | **734332** | 640 414,5 | ALM |
| 1.6 FSi 16V 1K1/0/1/2 | E | 1598 | BAG,BLF,BLP | A | +/- | TSW | 10/03 ▸ | 1K0121251BQ | **734335** | 640 414,5 | ALM |
| 1.6 FSi 16V 1K1/0/1/2/B | E | 1598 | BAG,BLF,BLP | A | +/- | TSW | 10/03 ▸ 07/08 | 1K0121251BR | **734335** | 640 414,5 | ALM |
| 1.6 FSi 16V 1K1/0/1/2 | E | 1598 | BAG,BLF,BLP | A | +/- | TSW | 10/03 ▸ | 1K0121251P | **734332** | 640 414,5 | ALM |
| 1.6 FSi 16V 1K1/0/1/B | E | 1598 | BLF | A | | TSW | 01/05 ▸ 07/08 | 1K0121251P | **734332** | 640 414,5 | ALM |
| 2.0 FSi 16V 1K1/1/2/B | E | 1984 | AXW,BLR,BLX,BLY | M | +/- | TSW | 10/03 ▸ 11/05 | 1K0121251AR | **735120** | 650 414,5 | ALM |
| 2.0 FSi 16V,2.0 TFSi 16V 1K52 ; 1K1/1/2/3/9/D | E | 1984 | AXX,BWA,BYD | M | +/- | Air Seal | 09/04 ▸ 03/09 | 1K0121251DM | **734333** | 650 454,3 | ALB |
| 2.0 TFSi 16V 1K1/2/3 | E | 1984 | AXX | M | +/- | Air Seal | 09/04 ▸ 11/05 | 1K0121251N | **734333** | 650 454,3 | ALB |
| 2.0 TFSi 16V 1K1/2/3 | E | 1984 | AXX | M | +/- | Air Seal | 09/04 ▸ 07/05 | 1K0121251BK | **734333** | 650 454,3 | ALB |
| 2.0 FSi 16V,2.0 TFSi 16V 1K52 ; 1K1/1/3/9/D | E | 1984 | BWA,BYD | M | +/- | Air Seal | 11/05 ▸ 03/09 | 1K0121251AB | **734333** | 650 454,3 | ALB |
| 2.0 FSi 16V 1K1/1/2/B | E | 1984 | BVX,BVY,BVZ | M | + | TSW | 11/05 ▸ 11/08 | 1K0121251CJ | **735120** | 650 414,5 | ALM |
| 2.0 FSi 16V 1K1/1/2/B | E | 1984 | BVX,BVY,BVZ | M | - | TSW | 11/05 ▸ | 1K0121251F | **734335** | 640 414,5 | ALM |
| 2.0 FSi 16V 1K1/1/2/B | E | 1984 | BVY,BVZ | M | - | TSW | 11/05 ▸ 11/08 | 1K0121251BR | **734335** | 640 414,5 | ALM |
| 2.0 TFSi 16V 1K13 | E | 1984 | AXX | M | | Air Seal | 09/04 ▸ 05/05 | 1K0121251N | **734333** | 650 454,3 | ALB |
| 2.0 TFSi 16V 1K13 1k-6-000 001 ▸ | E | 1984 | AXX | M | | Air Seal | 06/05 ▸ 11/05 | 1K0121251DM | **734333** | 650 454,3 | ALB |
| 2.0 TFSi 16V 1K13 1k-6-000 001 ▸ | E | 1984 | AXX | M | | Air Seal | 08/05 ▸ 11/05 | 1K0121251AB | **734333** | 650 454,3 | ALB |
| 2.0 FSi 16V 1K11 | E | 1984 | BVX | M | | TSW | 05/06 ▸ 05/07 | 1K0121251F | **734335** | 640 414,5 | ALM |
| 2.0 FSi 16V 1K1/1/2/B | E | 1984 | AXW,BLR,BLX,BLY | A | +/- | TSW | 10/03 ▸ 11/05 | 1K0121251CJ | **735120** | 650 414,5 | ALM |
| 2.0 TFSi 16V 1K1/1/2/3/D | E | 1984 | AXX | A | +/- | Air Seal | 09/04 ▸ 01/06 | 1K0121251N | **734333** | 650 454,3 | ALB |
| 2.0 TFSi 16V 1K1/1/2/3/D | E | 1984 | AXX | A | +/- | Air Seal | 09/04 ▸ 07/05 | 1K0121251BK | **734333** | 650 454,3 | ALB |
| 2.0 FSi 16V,2.0 TFSi 16V 1K52 ; 1K1/1/2/3/9/D | E | 1984 | AXX,BWA,BYD | A | +/- | Air Seal | 09/04 ▸ 03/09 | 1K0121251DM | **734333** | 650 454,3 | ALB |
| 2.0 FSi 16V,2.0 TFSi 16V 1K52 ; 1K1/1/3/9/D | E | 1984 | BWA,BYD | A | +/- | Air Seal | 11/05 ▸ 03/09 | 1K0121251AB | **734333** | 650 454,3 | ALB |
| 2.0 FSi 16V 1K1/1/2/B | E | 1984 | BVX,BVY,BVZ | A | + | TSW | 11/05 ▸ 11/08 | 1K0121251CJ | **735120** | 650 414,5 | ALM |
| 2.0 FSi 16V 1K1/1/2/B | E | 1984 | BVY,BVZ | A | - | TSW | 11/05 ▸ 11/08 | 1K0121251BR | **734335** | 640 414,5 | ALM |
| 2.0 FSi 16V 1K1/1/2/B | E | 1984 | BVY,BVZ | A | - | TSW | 11/05 ▸ | 1K0121251F | **734335** | 640 414,5 | ALM |
| 2.0 TFSi 16V 1K13 | E | 1984 | AXX | A | | Air Seal | 09/04 ▸ 11/05 | 1K0121251N | **734333** | 650 454,3 | ALB |

# VOLKSWAGEN (.../...)

## GOLF V (2003>) (.../...)

| Type Ctr. | | CC | | AC | | 2+3 | OE | Valeo | DIM. | TECH |
|---|---|---|---|---|---|---|---|---|---|---|
| 2.0 TFSi 16V 1k-6-000 001 ▸ | 1K1/1/3/D | E | 1984 | AXX | A | Air Seal | 06/05 ▸ 01/06 | 1K0121251DM | **734333** | 650 454,3 | ALB |
| 2.0 TFSi 16V 1k-6-000 001 ▸ | 1K1/1/3/D | E | 1984 | AXX | A | Air Seal | 08/05 ▸ 01/06 | 1K0121251AB | **734333** | 650 454,3 | ALB |
| 2.0 FSi 16V | 1K1B | E | 1984 | BVX | A | TSW | 06/07 ▸ 11/08 | 1K0121251F | **734335** | 640 414,5 | ALM |
| 1.9 TDi | 1K1/0/1/2/B ; 1K5/0 1/2 | D | 1896 | BKC,BRU,BXE,BXF | M +/- | TSW | 10/03 ▸ | 1K0121253AA | **732872** | 650 414,5 | ALM |
| 1.9 TDi | 1K1/0/1/2 | D | 1896 | BKC,BRU | M +/- | TSW | 10/03 ▸ | 1K0121253H | **732872** | 650 414,5 | ALM |
| 1.9 TDi | 1K1/0/1/2 | D | 1896 | BJB,BKC,BRU | M | TSW | 10/03 ▸ | 1K0121253H | **732872** | 650 414,5 | ALM |
| 1.9 TDi | 1K52 ; 1K1/0/1/2 | D | 1896 | BJB,BKC,BRU | M | TSW | 10/03 ▸ 11/08 | 1K0121253AA | **732872** | 650 414,5 | ALM |
| 1.9 TDi | 1K1/0/1/2/B | D | 1896 | BKC,BXE | A +/- | TSW | 10/03 ▸ 11/08 | 1K0121253AA | **732872** | 650 414,5 | ALM |
| 1.9 TDi | 1K1/0/1/2 | D | 1896 | BKC | A +/- | TSW | 10/03 ▸ | 1K0121253H | **732872** | 650 414,5 | ALM |
| 1.9 TDi | 1K1/0/1/2/B ; 1K5/0 1/2 | D | 1896 | BLS | A + | TSW | 05/05 ▸ 07/08 | 1K0121251AN | **735120** | 650 414,5 | ALM |
| 2.0 TDi 16V | 1K1/0/1/2/B ; 1K5/1 2 | D | 1968 | AZV,BKD | M +/- | Air Seal | 10/03 ▸ | 1K0121251BK | **734333** | 650 454,3 | ALB |
| 2.0 TDi 16V | 1K1/0/1/2/3/B ; 1K5 1/2 | D | 1968 | AZV,BKD,BMN | M +/- | Air Seal | 10/03 ▸ | 1K0121251DM | **734333** | 650 454,3 | ALB |
| 2.0 TDi 16V | 1K1/0/1/2/B | D | 1968 | AZV,BKD | M +/- | Air Seal | 10/03 ▸ | 1K0121251N | **734333** | 650 454,3 | ALB |
| 2.0 SDi | 1K1/0/1/2 | D | 1968 | BDK | M +/- | TSW | 01/04 ▸ | 1K0121251BQ | **734335** | 640 414,5 | ALM |
| 2.0 SDi | 1K1/0/1/2 | D | 1968 | BDK | M +/- | TSW | 01/04 ▸ | 1K0121251P | **734332** | 640 414,5 | ALM |
| 2.0 SDi | 1K1/0/1/2 | D | 1968 | BDK | M +/- | TSW | 01/04 ▸ 11/08 | 1K0121251BR | **734335** | 640 414,5 | ALM |
| 2.0 TDi,2.0 TDi 16V | 1K1/0/1/2 | D | 1968 | BMM/F,BVB | M +/- | | 12/04 ▸ | 1K0121251AL | | 650 451 | ALM |
| 2.0 TDi 16V | 1K1/2/3/B | D | 1968 | BMN | M +/- | Air Seal | 11/05 ▸ 11/08 | 1K0121251AB | **734333** | 650 454,3 | ALB |
| 2.0 SDi | 1K1/0/1/2 | D | 1968 | BDK | M + | TSW | 01/04 ▸ 11/08 | 1K0121251CJ | **735120** | 650 414,5 | ALM |
| 2.0 SDi | 1K1/0/1/2 | D | 1968 | BDK | M + | TSW | 01/04 ▸ | 1K0121251AR | **735120** | 650 414,5 | ALM |
| 2.0 SDi | 1K11 | D | 1968 | BDK | M + | TSW | 06/05 ▸ | 1K0121251P | **734332** | 640 414,5 | ALM |
| 2.0 SDi | 1K11 | D | 1968 | BDK | M + | TSW | 06/05 ▸ 11/08 | 1K0121251BR | **734335** | 640 414,5 | ALM |
| 2.0 SDi | 1K11 | D | 1968 | BDK | M + | TSW | 06/05 ▸ | 1K0121251BQ | **734335** | 640 414,5 | ALM |
| 2.0 TDi | 1K1/0/1/2/B | D | 1968 | BMM/F | M + | | 11/05 ▸ | 1K0121251AL | | 650 451 | ALM |
| 2.0 TDi 16V | 1K1/0/1/2 | D | 1968 | AZV | M | Air Seal | 10/03 ▸ 05/04 | 1K0121251DM | **734333** | 650 454,3 | ALB |
| 2.0 TDi 16V | 1K1/0/1/2/B ; 1K5/1 2 | D | 1968 | AZV,BKD | M | Air Seal | 10/03 ▸ | 1K0121251N | **734333** | 650 454,3 | ALB |
| 2.0 TDi 16V | 1K1/0/1/2 | D | 1968 | AZV | M | Air Seal | 10/03 ▸ | 1K0121251BK | **734333** | 650 454,3 | ALB |
| 2.0 SDi | 1K1/0/1/2 | D | 1968 | BDK | M | TSW | 01/04 ▸ 11/08 | 1K0121251P | **734332** | 640 414,5 | ALM |
| 2.0 TDi,2.0 TDi 16V | 1K1/0/1/2/B ; 1K5/1 2 | D | 1968 | BMM/F,BVB | M | | 12/04 ▸ 11/08 | 1K0121251AL | | 650 451 | ALM |
| 2.0 TDi 16V | 1K1/0/1/2/B | D | 1968 | AZV,BKD | A +/- | Air Seal | 10/03 ▸ | 1K0121251N | **734333** | 650 454,3 | ALB |
| 2.0 TDi 16V | 1K1/0/1/2/3/B | D | 1968 | AZV,BKD,BMN | A +/- | Air Seal | 10/03 ▸ 11/08 | 1K0121251DM | **734333** | 650 454,3 | ALB |
| 2.0 TDi 16V | 1K1/2/3/B | D | 1968 | BMN | A +/- | Air Seal | 11/05 ▸ 11/08 | 1K0121251AB | **734333** | 650 454,3 | ALB |
| 2.0 TDi 16V | 1K1/0/1/2 | D | 1968 | AZV | A + | Air Seal | 10/03 ▸ 05/07 | 1K0121251AB | **734333** | 650 454,3 | ALB |
| 2.0 TDi | 1K1B | D | 1968 | BMM/F | A + | | 05/06 ▸ | 1K0121251AL | | 650 451 | ALM |
| 2.0 TDi | 1K1B | D | 1968 | BMM/F | A + | TSW | 05/06 ▸ | 1K0121251AN | **735120** | 650 414,5 | ALM |
| 2.0 TDi 16V | 1K1/0/1/2/B | D | 1968 | AZV,BKD | A | Air Seal | 10/03 ▸ 11/08 | 1K0121251N | **734333** | 650 454,3 | ALB |
| 2.0 TDi 16V | 1K1/0/1/2/B | D | 1968 | BKD | A | Air Seal | 03/06 ▸ 11/08 | 1K0121251AB | **734333** | 650 454,3 | ALB |
| 2.0 TDi | 1K1/B ; 1K5/1/2 | D | 1968 | BMM/F | A | | 05/06 ▸ 11/08 | 1K0121251AL | | 650 451 | ALM |
| 2.0 TDi 16V | 1K1B | D | 1968 | BKD | A | Air Seal | 06/07 ▸ 11/08 | 1K0121251DM | **734333** | 650 454,3 | ALB |

## GOLF V PLUS (2005>)

| | | | | | | | | | | | |
|---|---|---|---|---|---|---|---|---|---|---|---|
| 1.4 FSi 16V,1.4 i 16V | 5M1/0/1/2 | E | 1390 | BCA,BLN,BUD | M +/- | TSW | 01/05 ▸ | 1K0121251BQ | **734335** | 640 414,5 | ALM |
| 1.4 FSi 16V,1.4 i 16V | 5M1/0/1/2 | E | 1390 | BCA,BLN,BUD,CGGA | M +/- | TSW | 01/05 ▸ | 1K0121251BR | **734335** | 640 414,5 | ALM |
| 1.4 FSi 16V,1.4 i 16V | 5M1/0/1/2 | E | 1390 | BCA,BLN,BUD | M +/- | TSW | 01/05 ▸ | 1K0121251P | **734332** | 640 414,5 | ALM |
| 1.4 FSi 16V | 1K1/0/1/2 | E | 1390 | CAXA | M +/- | | 11/07 ▸ | 1K0121251BN | **735179** | | |
| 1.4 FSi 16V | 1K1/0/1/2 | E | 1390 | CAXA | M +/- | TSW | 11/07 ▸ | 1K0121253BB | **732872** | 650 414,5 | ALM |
| 1.4 FSi 16V,1.4 i 16V | 5M1/0/1/2 | E | 1390 | BCA,BLN | M + | TSW | 01/05 ▸ | 1K0121251E | **734335** | 640 414,5 | ALM |
| 1.4 FSi 16V,1.4 i 16V | 5M1/0/1/2 | E | 1390 | BCA,BLN | M + | TSW | 01/05 ▸ | 1K0121251AR | **735120** | 650 414,5 | ALM |
| 1.4 FSi 16V,1.4 i 16V | 5M1/0/1/2 | E | 1390 | BCA,BLN | M + | TSW | 01/05 ▸ 05/06 | 1K0121251CJ | **735120** | 650 414,5 | ALM |
| 1.4 FSi 16V | 1K1/0/1/2 | E | 1390 | CAXA | M + | TSW | 11/07 ▸ | 1K0121253H | **732872** | 650 414,5 | ALM |
| 1.4 FSi 16V,1.4 i 16V | 5M1/0/1/2 | E | 1390 | BCA,BLN,BUD | M | TSW | > ▸ | 1K0121251F | **734335** | 640 414,5 | ALM |
| 1.4 FSi 16V,1.4 i 16V | 5M1/0/1/2 | E | 1390 | BCA,BLN | M | TSW | 01/05 ▸ 05/06 | 1K0121251P | **734332** | 640 414,5 | ALM |
| 1.4 FSi 16V | 1K1/0/1/2 | E | 1390 | CAXA | A +/- | | 07/07 ▸ | 1K0121251BN | **735179** | | |
| 1.4 FSi 16V | 1K1/0/1/2 | E | 1390 | CAXA | A +/- | TSW | 07/07 ▸ | 1K0121253AP | **732872** | 650 414,5 | ALM |
| 1.4 FSi 16V | 1K1/0/1/2 | E | 1390 | CAXA | A + | TSW | 07/07 ▸ | 1K0121253H | **732872** | 650 414,5 | ALM |
| 1.4 i 16V ▸ 5 550 000 | 5M1/0/1 | E | 1390 | BCA | M | TSW | 01/05 ▸ | 1K0121251AR | **735120** | 650 414,5 | ALM |
| 1.6 i | 5M1/0/1/2/C | E | 1595 | BSE,BSF | M +/- | TSW | 05/05 ▸ | 1K0121251F | **734335** | 640 414,5 | ALM |
| 1.6 i | 5M1/0/1/2/C | E | 1595 | BSE,BSF,CCSA | M +/- | TSW | 05/05 ▸ | 1K0121251BR | **734335** | 640 414,5 | ALM |
| 1.6 i | 5M1/0/1/2/C | E | 1595 | BSE,BSF | M +/- | TSW | 05/05 ▸ | 1K0121251P | **734332** | 640 414,5 | ALM |
| 1.6 i | 5M1C | E | 1595 | BSE | M + | TSW | 05/05 ▸ | 1K0121251F | **734335** | 640 414,5 | ALM |
| 1.6 i | 5M1/0/1/2 | E | 1595 | BSF | M + | TSW | 05/05 ▸ | 1K0121251AR | **735120** | 650 414,5 | ALM |

Radiator Radiateur Motorkühler Radiatore di raffreddamento Radiator Radyatör Радиатор Radiador Radiator vízhűtő Vodní chladič Radiator Ψυγείο



• **New** Nouveau **Nuevo** Novo **Nuovo** Nieuw **Neu** Nowość **Yeni** Новый Νέο **Nový**

## GOLF V PLUS (2005>) (.../...)

| | | | CC | | | AC | | | OE | Valeo | DIM. | TECH |
|---|---|---|---|---|---|---|---|---|---|---|---|---|
| 1.6 i | 5M1/0/1/2 | E | 1595 | BSF | M | + | TSW | 05/05 ▸ | 1K0121251E | **734335** | 640 414,5 | ALM |
| 1.6 i | 5M1/0/1/2/C | E | 1595 | CCSA | M | | TSW | 11/07 ▸ | 1K0121251BQ | **734335** | 640 414,5 | ALM |
| 1.6 i | 5M1/0/1/2/C | E | 1595 | BSE,BSF | A | +/- | TSW | 05/05 ▸ | 1K0121251BR | **734335** | 640 414,5 | ALM |
| 1.6 i | 5M1/0/1/2 | E | 1595 | BSE,BSF | A | +/- | TSW | 05/05 ▸ | 1K0121251F | **734335** | 640 414,5 | ALM |
| 1.6 i | 5M1/0/1/2 | E | 1595 | BSE,BSF | A | +/- | TSW | 05/05 ▸ | 1K0121251P | **734332** | 640 414,5 | ALM |
| 1.6 i | 5M1/0/1/2 | E | 1595 | BSF | A | + | TSW | 05/05 ▸ | 1K0121251CJ | **735120** | 650 414,5 | ALM |
| 1.6 i | 5M1/0/1/2 | E | 1595 | BSF | A | + | TSW | 05/05 ▸ | 1K0121251E | **734335** | 640 414,5 | ALM |
| 1.6 i | 5M1/0/1/2/C | E | 1595 | BSE,BSF | A | + | TSW | 05/07 ▸ | 1K0121251F | **734335** | 640 414,5 | ALM |
| 1.6 i | 5M1/0/1/2/C | E | 1595 | BSE,BSF | A | | TSW | 05/07 ▸ | 1K0121251P | **734332** | 640 414,5 | ALM |
| 1.6 FSi 16V | 5M1/0/1/2 | E | 1598 | BLF | M | +/- | TSW | 01/05 ▸ | 1K0121251BQ | **734335** | 640 414,5 | ALM |
| 1.6 FSi 16V | 5M1/0/1/2 | E | 1598 | BLF | M | +/- | TSW | 01/05 ▸ | 1K0121251P | **734332** | 640 414,5 | ALM |
| 1.6 FSi 16V | 5M1/0/1/2 | E | 1598 | BLF | M | +/- | TSW | 01/05 ▸ 01/09 | 1K0121251BR | **734335** | 640 414,5 | ALM |
| 1.6 FSi 16V | 5M1/0/1/2 | E | 1598 | BLF | M | + | TSW | 01/05 ▸ | 1K0121251E | **734335** | 640 414,5 | ALM |
| 1.6 FSi 16V | 5M1/0/1/2 | E | 1598 | BLF | M | + | TSW | 01/05 ▸ | 1K0121251AR | **735120** | 650 414,5 | ALM |
| 1.6 FSi 16V | 5M1/0/1/2 | E | 1598 | BLF | M | + | TSW | 01/05 ▸ 01/09 | 1K0121251CJ | **735120** | 650 414,5 | ALM |
| 1.6 FSi 16V | 5M1/0/1/2 | E | 1598 | BLF | M | | TSW | 01/05 ▸ 01/09 | 1K0121251P | **734332** | 640 414,5 | ALM |
| 1.6 FSi 16V | 5M1/0/1/2 | E | 1598 | BLF | M | | TSW | 01/05 ▸ 01/09 | 1K0121251F | **734335** | 640 414,5 | ALM |
| 5 550 001 ▸ | | | | | | | | | | | | |
| 1.6 FSi 16V | 5M1/0/1/2 | E | 1598 | BLF | A | +/- | TSW | 04/05 ▸ | 1K0121251BQ | **734335** | 640 414,5 | ALM |
| 1.6 FSi 16V | 5M1/0/1/2 | E | 1598 | BLF | A | +/- | TSW | 04/05 ▸ | 1K0121251P | **734332** | 640 414,5 | ALM |
| 1.6 FSi 16V | 5M1/0/1/2 | E | 1598 | BLF | A | +/- | TSW | 04/05 ▸ 05/08 | 1K0121251BR | **734335** | 640 414,5 | ALM |
| 1.6 FSi 16V | 5M1/0/1/2 | E | 1598 | BLF | A | | TSW | 04/05 ▸ 05/08 | 1K0121251P | **734332** | 640 414,5 | ALM |
| 1.6 FSi 16V | 5M1/0/1/2 | E | 1598 | BLF | A | | TSW | 04/05 ▸ 05/08 | 1K0121251F | **734335** | 640 414,5 | ALM |
| 1.6 FSi 16V | 5M1/0/1/2 | E | 1598 | BLF | A | | TSW | 04/05 ▸ | 1K0121251AR | **735120** | 650 414,5 | ALM |
| 1.6 FSi 16V | 5M1/0/1/2 | E | 1598 | BLF | A | | TSW | 04/05 ▸ 05/08 | 1K0121251CJ | **735120** | 650 414,5 | ALM |
| 1.6 FSi 16V | 5M1/0/1/2 | E | 1598 | BLF | A | | TSW | 04/05 ▸ | 1K0121251E | **734335** | 640 414,5 | ALM |
| 1.6 FSi 16V | 5M1/0/1/2 | E | 1598 | BLF | M | | TSW | 01/05 ▸ | 1K0121251AR | **735120** | 650 414,5 | ALM |
| ▸ 5 550 000 | | | | | | | | | | | | |
| 2.0 FSi 16V | 5M1/1/2 | E | 1984 | BLR,BLY,BVY,BVZ | M | +/- | TSW | 01/05 ▸ 06/08 | 1K0121251BR | **734335** | 640 414,5 | ALM |
| 2.0 FSi 16V | 5M1/1/2 | E | 1984 | BLR,BLY,BVY,BVZ | M | + | TSW | 01/05 ▸ 06/08 | 1K0121251CJ | **735120** | 650 414,5 | ALM |
| 2.0 FSi 16V | 5M1/1/2 | E | 1984 | BLR,BLY,BVY,BVZ | M | + | TSW | 01/05 ▸ | 1K0121251AR | **735120** | 650 414,5 | ALM |
| 2.0 FSi 16V | 5M1/1/2 | E | 1984 | BVY,BVZ | M | + | | 02/08 ▸ 06/08 | 1K0121251CN | **735186** | 650 414,5 | ALM |
| 1K-8-675 001, 1K-8-575 001 ▸ | | | | | | | | | | | | |
| 2.0 FSi 16V | 5M1/1/2 | E | 1984 | BLR,BLY,BVY,BVZ | M | - | TSW | 01/05 ▸ | 1K0121251F | **734335** | 640 414,5 | ALM |
| 2.0 FSi 16V | 5M1/1/2 | E | 1984 | BVY,BVZ | M | | TSW | 11/05 ▸ 06/08 | 1K0121251F | **734335** | 640 414,5 | ALM |
| 2.0 FSi 16V | 5M1/1/2 | E | 1984 | BLR,BLY,BVY,BVZ | A | +/- | TSW | 01/05 ▸ 06/08 | 1K0121251BR | **734335** | 640 414,5 | ALM |
| 2.0 FSi 16V | 5M1/1/2 | E | 1984 | BLR,BLY,BVY,BVZ | A | + | TSW | 01/05 ▸ 06/08 | 1K0121251CJ | **735120** | 650 414,5 | ALM |
| 2.0 FSi 16V | 5M1/1/2 | E | 1984 | BLR,BLY,BVY,BVZ | A | + | TSW | 01/05 ▸ | 1K0121251AR | **735120** | 650 414,5 | ALM |
| 2.0 FSi 16V | 5M1/1/2 | E | 1984 | BVY,BVZ | A | + | | 02/08 ▸ 06/08 | 1K0121251CN | **735186** | 650 414,5 | ALM |
| 1K-8-575 001, 1K-8-675 001 ▸ | | | | | | | | | | | | |
| 2.0 FSi 16V | 5M1/1/2 | E | 1984 | BLR,BLY,BVY,BVZ | A | - | TSW | 01/05 ▸ | 1K0121251F | **734335** | 640 414,5 | ALM |
| 2.0 FSi 16V | 5M1/1/2 | E | 1984 | BVY,BVZ | A | | TSW | 11/05 ▸ 06/08 | 1K0121251F | **734335** | 640 414,5 | ALM |
| 1.9 TDi | 5M1/0/1/2 | D | 1896 | BKC,BRU,BXE,BXF | M | +/- | TSW | 01/05 ▸ 01/09 | 1K0121253AA | **732872** | 650 414,5 | ALM |
| 1.9 TDi | 5M1/0/1/2 | D | 1896 | BKC,BXE | A | +/- | TSW | 01/05 ▸ 01/09 | 1K0121253AA | **732872** | 650 414,5 | ALM |
| 2.0 TDi 16V | 5M1/0/1/2 | D | 1968 | AZV,BEE,BKD | M | +/- | Air Seal | 01/05 ▸ | 1K0121251N | **734333** | 650 454,3 | ALB |
| 2.0 TDi 16V | 5M1/0/1/2 | D | 1968 | AZV,BKD | M | | Air Seal | 01/05 ▸ 05/09 | 1K0121251N | **734333** | 650 454,3 | ALB |
| 2.0 TDi 16V | 5M1/0/1/2 | D | 1968 | AZV,BKD | A | +/- | Air Seal | 01/05 ▸ 01/09 | 1K0121251DM | **734333** | 650 454,3 | ALB |
| 2.0 TDi 16V | 5M1/0/1/2 | D | 1968 | AZV,BKD | A | +/- | Air Seal | 01/05 ▸ | 1K0121251BK | **734333** | 650 454,3 | ALB |
| 2.0 TDi | 5M1/0/1/2/C | D | 1968 | BMM/F | A | + | TSW | 02/06 ▸ | 1K0121251AN | **735120** | 650 414,5 | ALM |
| 2.0 TDi 16V | 5M1/0/1/2 | D | 1968 | AZV,BKD | A | | Air Seal | 01/05 ▸ 01/09 | 1K0121251N | **734333** | 650 454,3 | ALB |

## GOLF VI (2008>)

| | | | | | | | | | | | | |
|---|---|---|---|---|---|---|---|---|---|---|---|---|
| 1.6 i | 5K1/2/3/4 | F | 1595 | CHGA | M | +/- | TSW | 11/08 ▸ | 1K0121251DL | **734335** | 640 414,5 | ALM |
| 1.2 TSi | 5K1/2/3/4 | E | 1197 | CBZA,CBZB | M | +/- | | 05/09 ▸ | 1K0121251CL | •**735280** | 451,5 650 | ALM |
| 1.2 TSi | 5K1/2/3/4 ; AJ5/2/3/4 | E | 1197 | CBZA,CBZB | M | + | | 05/09 ▸ | 1K0121251BN | **735179** | | |
| 1.2 TSI | 5K1/2/3/4 ; AJ5/2/3/4 | E | 1197 | CBZB | M | - | | 05/09 ▸ | 1K0121251CL | •**735280** | 451,5 650 | ALM |
| 1.2 TSi | 5K1/2/3/4 | E | 1197 | CBZA,CBZB | A | +/- | | 11/09 ▸ | 1K0121251CL | •**735280** | 451,5 650 | ALM |
| 1.2 TSi | 5K1/2/3/4 ; AJ5/2/3/4 | E | 1197 | CBZA,CBZB | A | + | | 11/09 ▸ | 1K0121251BN | **735179** | | |
| 1.2 TSi | 5K1/2/3/4 ; AJ5/2/3/4 | E | 1197 | CBZB | A | - | | 11/09 ▸ | 1K0121251CL | •**735280** | 451,5 650 | ALM |
| 1.4 TSi,1.4 i 16V | AJ52 ; 5K1/2/3/4 | E | 1390 | CAVD,CGGA | M | +/- | TSW | 10/08 ▸ | 1K0121251DL | **734335** | 640 414,5 | ALM |
| 1.4 TFSi | 5K1/2/3/4 | E | 1390 | CAXA | M | +/- | | 10/08 ▸ | 1K0121251BN | **735179** | | |
| 1.4 TFSi | 5K1/2/3/4 | E | 1390 | CAXA | M | +/- | TSW | 10/08 ▸ | 1K0121253AP | **732872** | 650 414,5 | ALM |
| 1.4 i 16V | AJ52 | E | 1390 | BUD | M | +/- | TSW | 07/09 ▸ | 1K0121251BR | **734335** | 640 414,5 | ALM |
| 1.4 TFSI | 5K1/2/3/4 | E | 1390 | CAXA | M | + | TSW | 10/08 ▸ | 1K0121253H | **732872** | 650 414,5 | ALM |
| 1.4 i 16V | AJ52 | E | 1390 | BUD | M | | TSW | 07/09 ▸ | 1K0121251P | **734332** | 640 414,5 | ALM |
| 1.4 TSI 16V | AJ5/2/3/4 | E | 1390 | CAXA | M | | | 07/09 ▸ | 1K0121251BN | **735179** | | |

# VOLKSWAGEN (.../...)

## GOLF VI (2008>) (.../...)

| | | | CC | | | AC | | | OE | Valeo | DIM. | TECH |
|---|---|---|---|---|---|---|---|---|---|---|---|---|
| 1.4 TSI 16V | AJ5/2/3/4 | E | 1390 | CAXA | M | | TSW | 07/09 ▸ | 1K0121253AP | **732872** | 650 414,5 | ALM |
| 1.4 TSI 16V | AJ5/3/4 | E | 1390 | CAVD | M | | TSW | 07/09 ▸ | 1K0121251DL | **734335** | 640 414,5 | ALM |
| 1.4 TFSi | 5K1/2/3/4 | E | 1390 | CAXA | A | +/- | TSW | 10/08 ▸ | 1K0121253AP | **732872** | 650 414,5 | ALM |
| 1.4 TFSi | 5K1/2/3/4 | E | 1390 | CAXA | A | +/- | | 10/08 ▸ | 1K0121251BN | **735179** | | |
| 1.4 TSi | 5K1/3/4 | E | 1390 | CAVD | A | +/- | TSW | 10/08 ▸ | 1K0121251DL | **734335** | 640 414,5 | ALM |
| 1.4 TFSi | 5K1/2/3/4 | E | 1390 | CAXA | A | + | TSW | 10/08 ▸ | 1K0121253H | **732872** | 650 414,5 | ALM |
| 1.4 TSI 16V | AJ5/2/3/4 | E | 1390 | CAVD | A | | TSW | 07/09 ▸ | 1K0121251DL | **734335** | 640 414,5 | ALM |
| 1.4 TSI 16V | AJ5/2/3/4 | E | 1390 | CAXA | A | | TSW | 07/09 ▸ | 1K0121253AP | **732872** | 650 414,5 | ALM |
| 1.4 TSI 16V | AJ5/2/3/4 | E | 1390 | CAXA | A | | | 07/09 ▸ | 1K0121251BN | **735179** | | |
| 1.6 i | 5K1/2/3/4 | E | 1595 | BSE,BSF,CCSA,CMXA | M | +/- | TSW | 10/08 ▸ | 1K0121251DL | **734335** | 640 414,5 | ALM |
| 1.6 i 16V | AJ5/2/3/4 | E | 1595 | BSE,BSF,CCSA | M | +/- | TSW | 07/09 ▸ | 1K0121251BR | **734335** | 640 414,5 | ALM |
| 1.6 i 16V | AJ5/2/3/4 | E | 1595 | BSE,BSF,CCSA | M | | TSW | 07/09 ▸ | 1K0121251DL | **734335** | 640 414,5 | ALM |
| 1.6 i | 5K1/2/3/4 | E | 1595 | BSE,BSF | A | +/- | TSW | 10/08 ▸ | 1K0121251DL | **734335** | 640 414,5 | ALM |
| 2.0 GTI 16V,2.0 TSI 16V | 5K19 ; AJ54 | E | 1984 | CCZA,CCZB | M | +/- | | 04/09 ▸ | 1K0121251L | | | |
| 2.0 TFSi 16V | 5K1R | E | 1984 | CDLA,CDLC,CDLF | M | +/- | Air Seal | 11/09 ▸ | 1K0121251DM | **734333** | 650 454,3 | ALB |
| 2.0 TSI 16V | AJ54 | E | 1984 | CCZA | M | + | | 08/09 ▸ | 1K0121251BN | **735179** | | |
| 2.0 GTI 16V,2.0 TSI 16V | 5K19 ; AJ54 | E | 1984 | CCZA,CCZB | A | +/- | | 04/09 ▸ | 5K0121251J | | | |
| 2.0 TFSi 16V | 5K1R | E | 1984 | CDLA,CDLC,CDLF | A | +/- | Air Seal | 11/09 ▸ | 1K0121251DM | **734333** | 650 454,3 | ALB |
| 2.0 TSI 16V | AJ54 | E | 1984 | CCZA | A | + | | 07/09 ▸ | 1K0121251BN | **735179** | | |
| 1.6 TDI 16V | 5K1/2/3/4 ; AJ5/2/3/4/5 | D | 1598 | CAYB/F,CAYC/F | M | +/- | Air Seal | 02/09 ▸ | 1K0121251DM | **734333** | 650 454,3 | ALB |
| 1.6 TDI 16V | 5K1/2/3/4 ; AJ5/2/3/4/5 | D | 1598 | CAYB/F,CAYC/F | M | | Air Seal | 02/09 ▸ | 1K0121251DD | **734333** | 650 454,3 | ALB |
| 1.6 TDI 16V | 5K1/2/3/4 ; AJ5/2/3/4 | D | 1598 | CAYC/F | A | +/- | Air Seal | 02/09 ▸ | 1K0121251DM | **734333** | 650 454,3 | ALB |
| 1.6 TDI 16V | 5K1/2/3/4 ; AJ5/2/3/4 | D | 1598 | CAYC/F | A | | Air Seal | 02/09 ▸ | 1K0121251DD | **734333** | 650 454,3 | ALB |
| 2.0 TDI 16V | AJ53 ; 5K1/2/3/4/8 | D | 1968 | CBAB/F,CBDC/F,CFFA,CFFB,CFGB/F,CJAA/F,CLCA/F | M | +/- | Air Seal | 10/08 ▸ | 1K0121251DM | **734333** | 650 454,3 | ALB |
| 2.0 TDI 16V | 5K1/2/3/4 | D | 1968 | CBAA/F,CBAB/F | M | +/- | Air Seal | 10/08 ▸ | 1K0121251BK | **734333** | 650 454,3 | ALB |
| 2.0 TDI 16V | 5K1/2/3/4 | D | 1968 | CBAA/F,CBAB/F,CBDC/F | M | + | Air Seal | 10/08 ▸ | 1K0121251AB | **734333** | 650 454,3 | ALB |
| 2.0 TDI 16V | 5K1/2/3/4/8 ; AJ5/2/3/4 | D | 1968 | CBAA/F,CBAB/F,CBBB/F,CBDA/F,CBDB/F,CBDC/F | M | | Air Seal | 10/08 ▸ | 1K0121251DM | **734333** | 650 454,3 | ALB |
| 2.0 TDI 16V | AJ5/2/3/4 | D | 1968 | CBDA/F,CBDB/F | M | | TSW | 07/09 ▸ | 1K0121251DL | **734335** | 640 414,5 | ALM |
| 2.0 TDI 16V | AJ53 ; 5K1/2/3/4/8 | D | 1968 | CBAB/F,CBDC/F,CFFB,CFGB/F,CJAA/F | A | +/- | Air Seal | 10/08 ▸ | 1K0121251DM | **734333** | 650 454,3 | ALB |
| 2.0 TDI 16V | 5K1/2/3/4 | D | 1968 | CBAB/F | A | +/- | Air Seal | 10/08 ▸ | 1K0121251BK | **734333** | 650 454,3 | ALB |
| 2.0 TDI 16V | 5K1/2/3/4 | D | 1968 | CBAB/F,CBDC/F | A | + | Air Seal | 10/08 ▸ | 1K0121251AB | **734333** | 650 454,3 | ALB |
| 2.0 TDI 16V | 5K1/2/3/4/8 ; AJ5/2/3/4 | D | 1968 | CBAB/F,CBBB/F,CBDB/F,CBDC/F | A | | Air Seal | 10/08 ▸ | 1K0121251DM | **734333** | 650 454,3 | ALB |
| 2.0 TDI 16V | AJ5/2/3/4 | D | 1968 | CBDB/F | A | | TSW | 07/09 ▸ | 1K0121251DL | **734335** | 640 414,5 | ALM |

## GOLF VI PLUS (2009>)

| | | | | | | | | | | | | |
|---|---|---|---|---|---|---|---|---|---|---|---|---|
| 1.6 i | 521/2/3/4 | F | 1595 | CHGA | M | - | TSW | 05/09 ▸ | 1K0121251DL | **734335** | 640 414,5 | ALM |
| 1.4 TSI 16V | 521/2/3/4 | E | 1390 | CAXA | M | +/- | TSW | 01/09 ▸ | 1K0121253BB | **732872** | 650 414,5 | ALM |
| 1.4 TSI 16V | 521/2/3/4 | E | 1390 | CAXA | M | + | TSW | 01/09 ▸ | 1K0121253AA | **732872** | 650 414,5 | ALM |
| 1.4 i 16V | 521/2/3 | E | 1390 | CGGA | M | - | TSW | 01/09 ▸ | 1K0121251DL | **734335** | 640 414,5 | ALM |
| 1.4 TSI 16V | 521/2/3/4 | E | 1390 | CAXA | M | | | 01/09 ▸ | 1K0121251BN | **735179** | | |
| 1.4 TSI 16V | 521/2/3/4 | E | 1390 | CAXA | A | +/- | TSW | 01/09 ▸ | 1K0121253BB | **732872** | 650 414,5 | ALM |
| 1.4 TSI 16V | 521/2/3/4 | E | 1390 | CAXA | A | + | TSW | 01/09 ▸ | 1K0121253AA | **732872** | 650 414,5 | ALM |
| 1.4 TSI 16V | 521/2/3/4 | E | 1390 | CAXA | A | | | 01/09 ▸ | 1K0121251BN | **735179** | | |
| 1.6 i | 521/2/3/4 | E | 1595 | BSE,BSF,CCSA | M | - | TSW | 01/09 ▸ | 1K0121251DL | **734335** | 640 414,5 | ALM |
| 1.6 i | 521/2/3/4 | E | 1595 | BSE,BSF | A | - | TSW | 01/09 ▸ | 1K0121251DL | **734335** | 640 414,5 | ALM |
| 1.6 TDI 16V | 521/2/3/4 | D | 1598 | CAYB/F,CAYC/F | M | | Air Seal | 05/09 ▸ | 1K0121251DD | **734333** | 650 454,3 | ALB |
| 1.6 TDI 16V | 521/2/3/4 | D | 1598 | CAYC/F | A | | Air Seal | 01/09 ▸ | 1K0121251DD | **734333** | 650 454,3 | ALB |
| 2.0 TDI 16V | 521/2/3/4 | D | 1968 | CBDB/F,CBDC/F | M | +/- | Air Seal | 01/09 ▸ | 1K0121251DM | **734333** | 650 454,3 | ALB |
| 2.0 TDI 16V | 521/2/3/4 | D | 1968 | CBDB/F,CBDC/F | M | + | Air Seal | 01/09 ▸ | 1K0121251AB | **734333** | 650 454,3 | ALB |
| 2.0 TDI 16V | 521/2/3/4 | D | 1968 | CBDB/F,CBDC/F | A | +/- | Air Seal | 01/09 ▸ | 1K0121251DM | **734333** | 650 454,3 | ALB |
| 2.0 TDI 16V | 521/2/3/4 | D | 1968 | CBDB/F,CBDC/F | A | + | Air Seal | 01/09 ▸ | 1K0121251AB | **734333** | 650 454,3 | ALB |

## JETTA I (78>83)

| | | | | | | | | | | | | |
|---|---|---|---|---|---|---|---|---|---|---|---|---|
| 1.1 | 161/0/2 ; 162/1/2 | E | 1093 | GG | M | | TSW | 12/80 ▸ 02/84 | 171121253CJ | **883819** | 430 322 | ALM |
| B-340 739 ▸ | | | | | | | | | | | | |
| 1.3 | 1630 ; 161/0/2 | E | 1272 | GF,GS | M | | TSW | 12/80 ▸ 02/84 | 171121253CJ | **883819** | 430 322 | ALM |
| 1.5 | 1611 | E | 1457 | JB | M | + | | 08/78 ▸ 07/81 | 171121253G | | 480 322 | ALM |
| 1.5 | 1632 ; 161/1/2 | E | 1457 | GH,JB | M | + | TSW | 08/81 ▸ 02/84 | 321121253AL | **883727** | 525 322 | ALM |
| 15-B-007001, 16-B-330001 ▸ | | | | | | | | | | | | |
| 1.5 | 1632 ; 161/1/2 | E | 1457 | GH,JB | M | | TSW | > ▸ 02/84 | 191121253K | **883820** | 430 322 | ALM |
| 17-B-330001 ▸ | | | | | | | | | | | | |
| 1.5 | 1611 | E | 1457 | JB | A | + | | 08/78 ▸ 07/81 | 171121253G | | 480 322 | ALM |
| 1.5 | 1612 ; 1632 | E | 1457 | GH,JB | A | + | TSW | 08/81 ▸ 07/83 | 321121253AL | **883727** | 525 322 | ALM |
| 1.5 | 1612 ; 1632 | E | 1457 | GH,JB | A | | TSW | 08/81 ▸ 07/83 | 191121253K | **883820** | 430 322 | ALM |

Radiator Ψυγείο Vodní chladič Радиатор vízhűtő Radiador Radiator Radyatör Radiator Radiatore di raffreddamento Motorkühler Radiateur Radiator



• **New** Nouveau **Nuevo** Novo **Nuovo** Nieuw **Neu** Nowość **Yeni** Новый Νέο **Novy**

# VOLKSWAGEN (.../...)

## JETTA I (78>83) (.../...)

| | | CC | | | AC | | | OE | Valeo | DIM. | TECH |
|---|---|---|---|---|---|---|---|---|---|---|---|
| 1.5 1632 ; 161/0/2 ▸ 15-B-007000, 53-B-015000 | E | 1457 | GH,JB | A | | | 08/79 ▸ | 171121253BD | | 430 322 | ALM |
| 1.5 1632 ; 161/0/2 ▸ 53-B-015000, 17-B-340738 | E | 1457 | GH,JB | M | | | 08/79 ▸ | 171121253BD | | 430 322 | ALM |
| 1.6 1612 | E | 1588 | FR | M | + | TSW | 08/81 ▸ 02/84 | 321121253AL | 883727 | 525 322 | ALM |
| 1.6 1610 ; 1620 ▸ 16-B-330001, 53-B-015001 ▸ | E | 1588 | EM,FR | M | + | | 08/81 ▸ 07/83 | 321121251AL | | 700 322 | ALM |
| 1.6 1611 ▸ 15-A-0818463 ▸ | E | 1588 | EG | M | | | > ▸ 07/81 | 171121253D | | 480 322 | ALM |
| 1.6 161/0/1 | E | 1588 | EG,EM | M | | | 08/78 ▸ | 171121253G | | 480 322 | ALM |
| 1.6 1620 ; 1641 ; 161/0/2 | E | 1588 | EM,FR | M | | TSW | 12/80 ▸ 02/84 | 191121253K | 883820 | 430 322 | ALM |
| 1.6 1641 ▸ B-340 739 ▸ | E | 1588 | FR | M | | | 12/80 ▸ 07/81 | 321121251AL | | 700 322 | ALM |
| 1.6 1612 | E | 1588 | EG | M | | TSW | 08/81 ▸ 07/82 | 321121253AL | 883727 | 525 322 | ALM |
| 1.6 1610 ; 1620 ▸ 17-B-330001, 53-B-015001 ▸ | E | 1588 | EM,FR | A | + | | 08/81 ▸ 07/83 | 321121251AL | | 700 322 | ALM |
| 1.6 1610 | E | 1588 | EM | A | | | 08/79 ▸ 07/81 | 171121253G | | 480 322 | ALM |
| 1.6 1641 ▸ B-340 739 ▸ | E | 1588 | FR | A | | | 12/80 ▸ 07/81 | 321121251AL | | 700 322 | ALM |
| 1.6 1620 ; 1641 ; 161/0 | E | 1588 | EM,FR | A | | TSW | 12/80 ▸ 07/83 | 191121253K | 883820 | 430 322 | ALM |
| 1.6 1620 ; 1641 ; 161/0 ▸ 16-B-330000, 17-B-330000 | E | 1588 | EM,FR | M | | | 08/80 ▸ | 171121253BD | | 430 322 | ALM |
| 1.6 1620 ; 1641 ; 161/0 ▸ 53-B-015000, 16-B-330000 | E | 1588 | EM,FR | A | | | 08/80 ▸ | 171121253BD | | 430 322 | ALM |
| 1.7 1610 | E | 1716 | EN | M | | | 08/80 ▸ 07/84 | 171121253BD | | 430 322 | ALM |
| 1.7 1610 ▸ B-340 739 ▸ | E | 1716 | EN | M | | TSW | 12/80 ▸ 07/82 | 191121253K | 883820 | 430 322 | ALM |
| 1.7 1610 ▸ B-340 739 ▸ | E | 1716 | EN | M | | | 12/80 ▸ 07/82 | 321121251AL | | 700 322 | ALM |
| 1.7 1610 | E | 1716 | EN | A | | | 08/80 ▸ 07/81 | 171121253BD | | 430 322 | ALM |
| 1.7 1610 ▸ B-340 739 ▸ | E | 1716 | EN | A | | | 12/80 ▸ 07/81 | 321121251AL | | 700 322 | ALM |
| 1.7 1610 ▸ B-340 739 ▸ | E | 1716 | EN | A | | TSW | 12/80 ▸ 07/81 | 191121253K | 883820 | 430 322 | ALM |
| 1.8 1612 ; 1632 | E | 1781 | DX,JJ | M | | TSW | 08/82 ▸ 02/84 | 321121253AL | 883727 | 525 322 | ALM |
| 1.6 D 1611 ▸ B-340 739 ▸ | D | 1588 | CR | M | | | 12/80 ▸ 07/82 | 321121251AL | | 700 322 | ALM |
| 1.6 D 1620 ; 161/0/1 | D | 1588 | CR,JK | M | | TSW | 08/81 ▸ 02/84 | 321121253AL | 883727 | 525 322 | ALM |
| 1.6 TD 1611 | D | 1588 | CY | M | | TSW | 08/83 ▸ 02/84 | 191121253 | 883849 | 675 322 | ALM |
| 1.6 TD 1611 | D | 1588 | CY | M | | | 08/83 ▸ 07/84 | 191121253B | | 673 322 | CBS |
| 1.6 D 161/0/1 | D | 1588 | CR,JK | A | | TSW | 08/81 ▸ 07/83 | 321121253AL | 883727 | 525 322 | ALM |
| 1.6 D,1.6 TD 161/0/1 | D | 1588 | CR,CY | M | | | 08/80 ▸ 07/83 | 171121253CL | | 525 322 | ALM |

## JETTA II (83>92)

| | | CC | | | AC | | | OE | Valeo | DIM. | TECH |
|---|---|---|---|---|---|---|---|---|---|---|---|
| 1.05 1G22 ; 167/0/1 | E | 1043 | HZ | M | | TSW | 08/86 ▸ 10/91 | 171121253CJ | 883819 | 430 322 | ALM |
| 1.3,1.3 i 165/0/1/2/G/H/J 167/0/1/2/3/G/H/J ; 168/0/1 ; 1G2/2/3 | E | 1272 | 2C,GT,HK,MH,NU,NZ | M | | TSW | 08/83 ▸ 07/92 | 171121253CJ | 883819 | 430 322 | ALM |
| 1.6 165/0/1/2/G/H/J ; 167/0/1/2/G/H/J ; 168/0/1 2 ; 1G2/2/3 | E | 1595 | EZ,PN,RF | M | + | TSW | 08/83 ▸ 11/92 | 191121251C | 883849 | 675 322 | ALM |
| 1.6 165/0/1/2/G/H/J ; 167/0/1/2/G/H/J ; 168/0/1 2 ; 1G2/2/3 | E | 1595 | EZ,HM,PN,RF | M | | TSW | 08/83 ▸ 07/92 | 191121253K | 883820 | 430 322 | ALM |
| 1.6 165/0/1/2 ; 167/0/1/2 ; 168/0/1/2 ; 1G2/2/3 | E | 1595 | EZ,PN,RF | A | + | TSW | 08/83 ▸ 11/92 | 191121251C | 883849 | 675 322 | ALM |
| 1.6 165/0/1/2 ; 167/0/1/2 ; 168/0/1/2 ; 1G2/2/3 | E | 1595 | EZ,HM,PN,RF | A | | TSW | 08/83 ▸ 07/92 | 191121253K | 883820 | 430 322 | ALM |
| 1.8,1.8 i,1.8 i 16V 165/0/1/2/3/G/H/J/N S/T ; 167/0/1/2/3/7/G/H/J/K/N/S/T ; 168/2/3 7 ; 1G2/2/3/5 | E | 1781 | EV,GU,GX,GZ,HV,KR,PB,PF,RD,RH | M | + | TSW | 01/84 ▸ 10/91 | 191121251C | 883849 | 675 322 | ALM |
| 1.8,1.8 i 167/U/V/Z ; 168/U/V Z ; 1G2/2/5 | E | 1781 | 1P,GU,GU-K,GX | M | + | TSW | 08/87 ▸ 1991 | 191121253 | 883849 | 675 322 | ALM |
| 1.8,1.8 i 167/U/V/Z ; 168/U/V Z ; 1G2/2/5 | E | 1781 | 1P,GU,GU-K,GX | M | + | | 08/87 ▸ 07/91 | 191121253B | | 673 322 | CBS |
| 1.8 i 16V 1683 ; 1G25 ; 167/3 N | E | 1781 | KR,PL | M | - | TSW | 02/86 ▸ 10/91 | 191121253L | 883820 | 430 322 | ALM |
| 1.8,1.8 i 165/0/1/2/3/G/H/J/N S/T ; 167/0/1/2/3/7/G/H/J/K/N/S/T/U/V/Z 168/2/3/7/U/V/Z ; 1G2/2/3/5 | E | 1781 | 1P,EV,GU,GU-K,GX,GZ,HV,PB,PF RD,RH,RP | M | | TSW | 01/84 ▸ 10/91 | 321121253AL | 883727 | 525 322 | ALM |
| 1.8,1.8 i 167/U/V/Z ; 168/U/V Z ; 1G2/2/5 | E | 1781 | 1P,GU,GU-K,GX | M | | TSW | 08/87 ▸ 07/91 | 191121253N | 734853 | 525 317 | ALM |
| 1.8,1.8 i 165/0/1/2/G/H/J/S/T 1680 ; 167/0/1/2/G/H/J/S/T ; 1G2/1/2/3/5 | E | 1781 | RP,RV | M | | TSW | 08/87 ▸ 10/91 | 191121251C | 883849 | 675 322 | ALM |

# VOLKSWAGEN (.../...)

## JETTA II (83>92) (.../...)

| | | | CC | | | AC | | | OE | Valeo | DIM. | | TECH |
|---|---|---|---|---|---|---|---|---|---|---|---|---|---|
| 1.8,1.8 i | 165/0/1/2/G/H/J 167/0/1/2/7/G/H/J/K ; 168/0/2/7 ; 1G2/2/3 | E | 1781 | GU,GX,HV,PF,RH | A | + | TSW | 01/84 ▸ 10/91 | 191121251C | **883849** | 675 | 322 | ALM |
| 1.8,1.8 i | 165/0/1/2/G/H/J 167/0/1/2/7/G/H/J/K ; 168/0/2/7 ; 1G2/2/3 | E | 1781 | GU,GX,HV,PF,RH,RP | A | | TSW | 01/84 ▸ 10/91 | 321121253AL | **883727** | 525 | 322 | ALM |
| 1.8,1.8 i | 165/0/1/2/G/H/J 167/1/2/G/H/J ; 1G2/1/2/3 | E | 1781 | RP,RV | A | | TSW | 11/87 ▸ 10/91 | 191121251C | **883849** | 675 | 322 | ALM |
| 1.6 D | 165/0/1/2 ; 167/0/1/2 ; 168/0/1 ; 1G2/1/2/3 | D | 1588 | JP,ME | M | | TSW | 08/83 ▸ 10/91 | 321121253AL | **883727** | 525 | 322 | ALM |
| 1.6 D,1.6 TD | 165/0/1/2/T ; 167/0 1/2/7/T ; 168/1/2 ; 1G2/1/2/3/5 | D | 1588 | 1V,JR,MF,RA,SB | M | | TSW | 08/83 ▸ 07/92 | 191121253 | **883849** | 675 | 322 | ALM |
| 1.6 TD | 165/0/1/2/T ; 167/0 1/2/7/T ; 168/1/2 ; 1G2/1/2/3/5 G385828 ▸ | D | 1588 | JR,MF | M | | TSW | 11/85 ▸ 10/91 | 191121251F | **883849** | 675 | 322 | ALM |
| 1.6 D | 165/0/1/2 ; 167/0/1/2 ; 1G2/2/3 | D | 1588 | JP | A | | TSW | 08/83 ▸ 07/90 | 321121253AL | **883727** | 525 | 322 | ALM |
| 1.6 TD | 1671 ▸ 85827G | D | 1588 | JR | M | + | | 08/83 ▸ 11/85 | 191121253B | | 673 | 322 | CBS |
| 1.6 TD | 1671 ▸ 85827G | D | 1588 | JR | M | + | TSW | 08/83 ▸ 11/85 | 191121253 | **883849** | 675 | 322 | ALM |
| 1.6 D,1.6 TD | 165/0/1/2 ; 1682 167/0/2/7 ; 1G2/2/3/5 | D | 1588 | 1V,JR,RA,SB | M | | | 08/83 ▸ 11/92 | 191121253B | | 673 | 322 | CBS |

## JETTA (2000>2003)

| | | | | | | | | | | | | | |
|---|---|---|---|---|---|---|---|---|---|---|---|---|---|
| 2.0 i | 1J6/4/5 | E | 1984 | AZG | M | | TSW | 05/01 ▸ 04/02 | 1J0121253AD | **731606** | 414,5 | 650 | ALM |
| 2.0 i | 1J6/4/5 | E | 1984 | AZG | M | | TSW | 05/01 ▸ | 1J0121253N | **732175** | 650 | 414,5 | ALM |
| 2.0 i | 1J6/4/5 | E | 1984 | AZG | A | | TSW | 02/01 ▸ 04/01 | 1J0121253AD | **731606** | 414,5 | 650 | ALM |
| 2.0 i | 1J6/4/5 | E | 1984 | AVH,AZG | A | | TSW | 02/01 ▸ 04/01 | 1J0121253N | **732175** | 650 | 414,5 | ALM |

## JETTA (2005>2010)

| | | | | | | | | | | | | | |
|---|---|---|---|---|---|---|---|---|---|---|---|---|---|
| 1.4 TSi 16V | 1K2/0/1/2 | E | 1390 | CAXA | M | +/- | | 07/07 ▸ 06/08 | 1K0121251BN | **735179** | | | |
| 1.4 TSi 16V | 1K2/0/1/2 | E | 1390 | CAXA | A | +/- | | 10/07 ▸ 06/08 | 1K0121251BN | **735179** | | | |
| 1.6 i | 1K2/0/1/2 | E | 1595 | BSE,BSF | M | + | TSW | 08/05 ▸ | 1K0121251R | **735120** | 650 | 414,5 | ALM |
| 1.6 i | 1K2/0/1/2 | E | 1595 | BSE,BSF | M | + | TSW | 08/05 ▸ | 1K0121251Q | **734332** | 640 | 414,5 | ALM |
| 1.6 i | 1K20 | E | 1595 | CCSA | M | + | TSW | 01/08 ▸ 06/08 | 1K0121251BR | **734335** | 640 | 414,5 | ALM |
| 1.6 i | 1K2/0/1/2 | E | 1595 | BSE,BSF | M | | TSW | 08/05 ▸ 06/09 | 1K0121251R | **735120** | 650 | 414,5 | ALM |
| 1.6 i | 1K20 | E | 1595 | CCSA | M | | TSW | 01/08 ▸ 06/08 | 1K0121251BQ | **734335** | 640 | 414,5 | ALM |
| 1.6 i | 1K2/0/1/2 | E | 1595 | BSE,BSF | A | + | TSW | 10/05 ▸ | 1K0121251P | **734332** | 640 | 414,5 | ALM |
| 1.6 i | 1K2/0/1/2 | E | 1595 | BSE,BSF | A | + | TSW | 10/05 ▸ | 1K0121251AR | **735120** | 650 | 414,5 | ALM |
| 1.6 i | 1K2/0/1/2 | E | 1595 | BSE,BSF | A | | TSW | 10/05 ▸ 10/10 | 1K0121251R | **735120** | 650 | 414,5 | ALM |
| 1.6 FSI 16V | 1K2/0/1/2 | E | 1598 | BLF | M | + | TSW | 09/05 ▸ | 1K0121251Q | **734332** | 640 | 414,5 | ALM |
| 1.6 FSI 16V | 1K2/0/1/2 | E | 1598 | BLF | M | | TSW | 09/05 ▸ 06/08 | 1K0121251BR | **734335** | 640 | 414,5 | ALM |
| 1.6 FSI 16V | 1K2/0/1/2 | E | 1598 | BLF | M | | TSW | 09/05 ▸ 06/08 | 1K0121251Q | **734332** | 640 | 414,5 | ALM |
| 2.0 FSi 16V | 1K2/1/2 | E | 1984 | BLR,BLY | M | +/- | TSW | 08/05 ▸ | 1K0121251AR | **735120** | 650 | 414,5 | ALM |
| 2.0 TFSI 16V | 1K22 | E | 1984 | BWA | M | +/- | Air Seal | 09/05 ▸ 06/08 | 1K0121251AB | **734333** | 650 | 454,3 | ALB |
| 2.0 FSI 16V | 1K2/1/2 | E | 1984 | BLR,BLY,BVY,BVZ | M | | TSW | 08/05 ▸ 06/08 | 1K0121251R | **735120** | 650 | 414,5 | ALM |
| 2.0 TFSI 16V | 1K22 | E | 1984 | BWA | M | | Air Seal | 09/05 ▸ 11/05 | 1K0121251N | **734333** | 650 | 454,3 | ALB |
| 2.0 TFSI 16V | 1K2/2/3 | E | 1984 | BWA | A | +/- | Air Seal | 10/05 ▸ 06/08 | 1K0121251DM | **734333** | 650 | 454,3 | ALB |
| 2.0 FSi 16V | 1K2/1/2 | E | 1984 | BLR,BLY | A | +/- | TSW | 10/05 ▸ | 1K0121251AR | **735120** | 650 | 414,5 | ALM |
| 2.0 TFSI 16V | 1K22 | E | 1984 | BWA | A | +/- | Air Seal | 11/05 ▸ 06/08 | 1K0121251AB | **734333** | 650 | 454,3 | ALB |
| 2.0 TFSI 16V | 1K22 | E | 1984 | BWA | A | | Air Seal | 10/05 ▸ 11/05 | 1K0121251N | **734333** | 650 | 454,3 | ALB |
| 2.0 FSI 16V | 1K2/1/2 | E | 1984 | BLR,BLY,BVY,BVZ | A | | TSW | 10/05 ▸ 06/08 | 1K0121251R | **735120** | 650 | 414,5 | ALM |
| 2.0 TFSI 16V | 1K23 | E | 1984 | BWA | A | | Air Seal | 01/08 ▸ 06/08 | 1K0121251AB | **734333** | 650 | 454,3 | ALB |
| 2.0 TFSI 16V | 1K22 1K-6-730 798 | E | 1984 | BWA | M | +/- | Air Seal | 09/05 ▸ 11/05 | 1K0121251N | **734333** | 650 | 454,3 | ALB |
| 2.0 TFSI 16V | 1K22 1K-6-730 798 | E | 1984 | BWA | M | +/- | Air Seal | 09/05 ▸ 06/08 | 1K0121251DM | **734333** | 650 | 454,3 | ALB |
| 2.0 TFSI 16V | 1K22 1K-6-730 798 | E | 1984 | BWA | A | +/- | Air Seal | 10/05 ▸ 11/05 | 1K0121251BK | **734333** | 650 | 454,3 | ALB |
| 2.5 i 20V | 1K2/1/2 | E | 2480 | BTK | M | | TSW | 09/06 ▸ 06/07 | 1K0121251R | **735120** | 650 | 414,5 | ALM |
| 1.9 TDI | 1K2/0/1/2 | D | 1896 | BKC | M | +/- | Air Seal | 08/05 ▸ 02/06 | 1K0121251AB | **734333** | 650 | 454,3 | ALB |
| 1.9 TDI | 1K2/0/1/2 1K-6730 799 ▸ | D | 1896 | BLS | M | +/- | TSW | 10/05 ▸ | 1K0121251AN | **735120** | 650 | 414,5 | ALM |
| 1.9 TDI | 1K2/0/1/2 | D | 1896 | BXE | M | +/- | TSW | 03/06 ▸ 06/08 | 1K0121253AA | **732872** | 650 | 414,5 | ALM |
| 1.9 TDI | 1K2/0/1/2 | D | 1896 | BLS | M | | TSW | 11/05 ▸ 06/08 | 1K0121251AN | **735120** | 650 | 414,5 | ALM |
| 1.9 TDI | 1K2/0/1/2 | D | 1896 | BKC | A | +/- | Air Seal | 09/05 ▸ 02/06 | 1K0121251AB | **734333** | 650 | 454,3 | ALB |
| 1.9 TDI | 1K2/0/1/2 1K-6730 799 ▸ | D | 1896 | BLS | A | +/- | TSW | 10/05 ▸ | 1K0121251AN | **735120** | 650 | 414,5 | ALM |
| 1.9 TDI | 1K2/0/1/2 | D | 1896 | BXE | A | +/- | TSW | 03/06 ▸ 06/08 | 1K0121253AA | **732872** | 650 | 414,5 | ALM |
| 1.9 TDI | 1K2/0/1/2 | D | 1896 | BLS | A | | TSW | 11/05 ▸ 06/08 | 1K0121251AN | **735120** | 650 | 414,5 | ALM |
| 2.0 TDi | 1K20 | D | 1968 | BMM/F | M | +/- | TSW | 10/05 ▸ | 1K0121251AN | **735120** | 650 | 414,5 | ALM |
| 2.0 TDi 16V | 1K2/0/1/2 | D | 1968 | BKD,BMN | M | +/- | Air Seal | 11/05 ▸ 06/08 | 1K0121251AB | **734333** | 650 | 454,3 | ALB |
| 2.0 TDi 16V | 1K2/0/1/2 | D | 1968 | AZV,BKD | M | | Air Seal | 08/05 ▸ 11/05 | 1K0121251N | **734333** | 650 | 454,3 | ALB |

Radiator Radiateur Motorkühler Radiatore di raffreddamento Radiator Radyatör Radiador Радиатор vízhűtő Vodní chladič Radiator Ψυγείο



• **New** Nouveau **Nuevo** Novo **Nuovo** Nieuw **Neu** Nowość **Yeni** Новый Νέο **Nový**

# VOLKSWAGEN (.../...)

## JETTA (2005>2010) (.../...)

| | | | CC | | AC | | | | OE | Valeo | DIM. | TECH |
|---|---|---|---|---|---|---|---|---|---|---|---|---|
| 2.0 TDi | 1K2/0/1/2 | D | 1968 | BMM/F | M | | TSW | 10/05 ▸ 06/08 | 1K0121251AN | **735120** | 650 414,5 | ALM |
| 2.0 TDi 16V | 1K2/0/1/2 | D | 1968 | AZV,CBDB/F,CEGA/F | M | | Air Seal | 11/05 ▸ 10/10 | 1K0121251AB | **734333** | 650 454,3 | ALB |
| 2.0 TDi 16V | 1K2/0/1/2 | D | 1968 | AZV,BKD,CBDB/F,CEGA/F | A | +/- | Air Seal | 09/05 ▸ 10/10 | 1K0121251DM | **734333** | 650 454,3 | ALB |
| 2.0 TDi 16V | 1K2/0/1/2 | D | 1968 | BKD | A | +/- | Air Seal | 11/05 ▸ 06/08 | 1K0121251AB | **734333** | 650 454,3 | ALB |
| 2.0 TDi 16V | 1K2/0/1/2 | D | 1968 | AZV,CBDB/F,CEGA/F | A | | Air Seal | 09/05 ▸ 10/10 | 1K0121251AB | **734333** | 650 454,3 | ALB |
| 2.0 TDi | 1K2/0/1/2 | D | 1968 | BMM/F | A | | TSW | 10/05 ▸ 06/08 | 1K0121251AN | **735120** | 650 414,5 | ALM |
| 2.0 TDi 16V | 1K2/0/1/2 | D | 1968 | AZV,BKD,BMN,CBDB/F,CEGA/F | M | +/- | Air Seal | 08/05 ▸ 10/10 | 1K0121251DM | **734333** | 650 454,3 | ALB |
| ▸ 1K-6-730 798 | | | | | | | | | | | | |
| 2.0 TDi 16V | 1K2/0/1/2 | D | 1968 | AZV | M | +/- | Air Seal | 09/05 ▸ 11/05 | 1K0121251BK | **734333** | 650 454,3 | ALB |
| ▸ 1K-6-730 798 | | | | | | | | | | | | |
| 2.0 TDi 16V | 1K2/0/1/2 | D | 1968 | BKD | M | | Air Seal | 08/05 ▸ 11/05 | 1K0121251DM | **734333** | 650 454,3 | ALB |
| ▸ 1K-6-730 798 | | | | | | | | | | | | |
| 2.0 TDi 16V | 1K2/0/1/2 | D | 1968 | AZV | A | +/- | Air Seal | 09/05 ▸ 11/05 | 1K0121251N | **734333** | 650 454,3 | ALB |
| ▸ 1K-6-730 798 | | | | | | | | | | | | |
| 2.0 TDi 16V | 1K2/0/1/2 | D | 1968 | AZV,BKD | A | | Air Seal | 09/05 ▸ 11/05 | 1K0121251N | **734333** | 650 454,3 | ALB |
| ▸ 1K-6-730 798 | | | | | | | | | | | | |
| 2.0 TDi 16V | 1K2/0/1/2 | D | 1968 | BKD | A | | Air Seal | 09/05 ▸ 11/05 | 1K0121251BK | **734333** | 650 454,3 | ALB |

## JETTA (2010>)

| | | | | | | | | | | | | |
|---|---|---|---|---|---|---|---|---|---|---|---|---|
| 1.2 TSi 105 | 1622 | E | 1197 | CBZB | M | + | | 10/10 ▸ | 1K0121251BN | **735179** | | |
| 1.2 TSi 105 | 1622 | E | 1197 | CBZB | M | + | TSW | 10/10 ▸ | 1K0121253BB | **732872** | 650 414,5 | ALM |
| 1.2 TSi 105 | 1622 | E | 1197 | CBZB | M | - | | 10/10 ▸ | 1K0121251CL | •**735280** | 451,5 650 | ALM |
| 2.5 i 170 20V | 162/V/X | E | 2480 | CBTA,CCCA | M | | TSW | 04/10 ▸ | 1K0121251CJ | **735120** | 650 414,5 | ALM |
| 2.5 i 170 20V | 1624 | E | 2480 | CCCA | A | | TSW | 04/10 ▸ | 1K0121251CJ | **735120** | 650 414,5 | ALM |
| 1.6 TDI 105 16V | 1622 | D | 1598 | CAYC/F | M | | Air Seal | 10/10 ▸ | 1K0121251DM | **734333** | 650 454,3 | ALB |
| 1.6 TDI 105 16V | 1622 | D | 1598 | CAYC/F | A | | Air Seal | 10/10 ▸ | 1K0121251DM | **734333** | 650 454,3 | ALB |
| 2.0 TDI 140 16V | 1622 | D | 1968 | CFFB | M | | Air Seal | 10/10 ▸ | 1K0121251DM | **734333** | 650 454,3 | ALB |
| 2.0 TDI 140 16V | 1622 | D | 1968 | CFFB | A | | Air Seal | 10/10 ▸ | 1K0121251AB | **734333** | 650 454,3 | ALB |

## LUPO

| | | | | | | | | | | | | |
|---|---|---|---|---|---|---|---|---|---|---|---|---|
| 1.0 i | 6X10 | E | 999 | ALD | M | +/- | TSW | 06/03 ▸ 07/05 | 6N0121253AE | **732953** | 497 377,5 | ALB |
| 1.0 i | 6X10 | E | 999 | AER,AHT,ALD,ALL,ANV,AUC | M | + | TSW | 10/98 ▸ 07/05 | 1H0121253CB | **731267** | 628 377,5 | ALM |
| 1.0 i | 6X10 | E | 999 | AER,AHT,ALL | M | + | TSW | 10/98 ▸ 05/00 | 1H0121253L | **731267** | 628 377,5 | ALM |
| 1.0 i | 6X10 | E | 999 | AER,AHT,ALD,ALL,ANV,AUC | M | - | TSW | 10/98 ▸ 07/05 | 6N0121253K | **730956** | 430 377,5 | ALM |
| 1.0 i | 6X10 | E | 999 | ANV | M | | TSW | 05/99 ▸ 05/00 | 6N0121253AK | **730954** | 508 377,5 | ALM |
| 1.4 FSI 16V | 6E10 | E | 1390 | ARR | M | +/- | TSW | 09/00 ▸ 11/03 | 6N0121253L | **730954** | 508 377,5 | ALM |
| 1.4 FSI 16V | 6E10 | E | 1390 | ARR | M | +/- | TSW | 09/00 ▸ 11/03 | 6N0121253K | **730956** | 430 377,5 | ALM |
| 1.4 i,1.4 i 16V | 6X10 | E | 1390 | AUB,AUD,BBY | M | +/- | TSW | 06/03 ▸ 07/05 | 6N0121253AE | **732953** | 497 377,5 | ALB |
| 1.4 i 16V | 6X10 | E | 1390 | AFK,AHW,AKQ | M | + | TSW | 10/98 ▸ 05/00 | 1H0121253L | **731267** | 628 377,5 | ALM |
| 1.4 i,1.4 i 16V | 6X10 | E | 1390 | AFK,AHW,AKQ,APE,AQQ,AUA,AUB AUD,BBY | M | + | TSW | 10/98 ▸ 07/05 | 1H0121253CB | **731267** | 628 377,5 | ALM |
| 1.4 i,1.4 i 16V | 6X10 | E | 1390 | AFK,AHW,AKQ,APE,AQQ,AUA,AUB AUD,BBY | M | - | TSW | 10/98 ▸ 07/05 | 6N0121253K | **730956** | 430 377,5 | ALM |
| 1.4 i 16V | 6X10 | E | 1390 | AHW | M | - | TSW | 06/03 ▸ 07/05 | 6N0121253AE | **732953** | 497 377,5 | ALB |
| 1.4 i 16V | 6X10 | E | 1390 | AHW,AKQ | A | +/- | TSW | 10/98 ▸ 05/00 | 1H0121253L | **731267** | 628 377,5 | ALM |
| 1.4 i 16V | 6X10 | E | 1390 | AHW,AKQ,APE,AUA,BBY | A | +/- | TSW | 10/98 ▸ 07/05 | 1H0121253CB | **731267** | 628 377,5 | ALM |
| 1.4 i 16V | 6X10 | E | 1390 | AHW,BBY | A | - | TSW | 06/03 ▸ 07/05 | 6N0121253AE | **732953** | 497 377,5 | ALB |
| 1.4 i 16V | 6X10 | E | 1390 | APE,AUA,BBY | A | | TSW | 05/99 ▸ 07/05 | 6N0121253K | **730956** | 430 377,5 | ALM |
| 1.6 i 16V | 6E10 | E | 1598 | AVY | M | +/- | TSW | > ▸ 07/05 | 6N0121253AH | **730955** | 628 377,5 | ALM |
| 1-006 869, 6E-1-006 869 ▸ | | | | | | | | | | | | |
| 1.6 i 16V | 6E10 | E | 1598 | AVY | M | + | TSW | 06/00 ▸ | 1H0121253CB | **731267** | 628 377,5 | ALM |
| 1.6 i 16V | 6E10 | E | 1598 | AVY | M | | TSW | 06/00 ▸ 01/01 | 1H0121253L | **731267** | 628 377,5 | ALM |
| ▸ 1-006 868 | | | | | | | | | | | | |
| 1.2 TDi | 6E10 | D | 1191 | AYZ | M | +/- | TSW | 11/00 ▸ 05/03 | 6N0121253K | **730956** | 430 377,5 | ALM |
| 2-000 001 ▸ | | | | | | | | | | | | |
| 1.2 TDi | 6E10 | D | 1191 | ANY,AYZ | M | + | TSW | 05/99 ▸ 05/03 | 1H0121253L | **731267** | 628 377,5 | ALM |
| 1.2 TDi | 6E10 | D | 1191 | ANY,AYZ | M | + | TSW | 05/99 ▸ 07/05 | 1H0121253CB | **731267** | 628 377,5 | ALM |
| 1.2 TDi | 6E10 | D | 1191 | ANY | M | | TSW | 05/99 ▸ 11/00 | 6N0121253K | **730956** | 430 377,5 | ALM |
| 1.2 TDi | 6E10 | D | 1191 | ANY | M | | TSW | 05/99 ▸ 11/00 | 6N0121253AK | **730954** | 508 377,5 | ALM |
| 1.2 TDi | 6E10 | D | 1191 | AYZ | M | +/- | TSW | 11/00 ▸ 05/01 | 6N0121253AK | **730954** | 508 377,5 | ALM |
| ▸ 2-000 001 | | | | | | | | | | | | |
| 1.4 TDi | 6X10 | D | 1422 | AMF | M | + | TSW | 05/99 ▸ 07/05 | 1H0121253CB | **731267** | 628 377,5 | ALM |
| 1.4 TDi | 6X10 | D | 1422 | AMF | M | - | TSW | 05/99 ▸ 07/05 | 6N0121253AE | **732953** | 497 377,5 | ALB |
| 1.7 SDi | 6X10 | D | 1716 | AKU | M | + | TSW | 10/98 ▸ 05/00 | 1H0121253L | **731267** | 628 377,5 | ALM |
| 1.7 SDi | 6X10 | D | 1716 | AKU | M | + | TSW | 10/98 ▸ 07/05 | 1H0121253CB | **731267** | 628 377,5 | ALM |
| 1.7 SDi | 6X10 | D | 1716 | AKU | M | - | TSW | 10/98 ▸ 07/05 | 6N0121253K | **730956** | 430 377,5 | ALM |

## NEW BEETLE (98>2001)

| | | | | | | | | | | | | |
|---|---|---|---|---|---|---|---|---|---|---|---|---|
| 1.6 i | 9C13 | E | 1595 | AWH,AYD | M | +/- | TSW | 11/99 ▸ 05/01 | 1C0121253A | •**732396** | 648,6 377 | ALB |
| 1.6 i | 9C13 | E | 1595 | AYD | A | +/- | TSW | 06/00 ▸ 05/01 | 1C0121253A | •**732396** | 648,6 377 | ALB |

# VOLKSWAGEN (.../...)

## NEW BEETLE (98>2001) (.../...)

| | | | CC | | | AC | | | OE | Valeo | DIM. | TECH |
|---|---|---|---|---|---|---|---|---|---|---|---|---|
| 1.8 i Turbo 20V | 9C13 ; 1C1/5/7/8 | E | 1781 | APH,AVC,AWU,AWV | M | +/- | TSW | 07/99 ▸ 05/01 | 1C0121253C | •732396 | 648,6 377 | ALB |
| 1.8 i Turbo 20V | 1C1/5/7/8 | E | 1781 | APH,AWV | A | +/- | TSW | 01/99 ▸ 05/01 | 1C0121253C | •732396 | 648,6 377 | ALB |
| 2.0 i | 9C13 ; 1C1/3/8 | E | 1984 | AEG,AQY | M | +/- | TSW | 01/98 ▸ 05/01 | 1C0121253A | •732396 | 648,6 377 | ALB |
| 2.0 i | 9C13 ; 1C1/3/5/8 | E | 1984 | AEG,APK,AQY | A | +/- | TSW | 01/98 ▸ | 1C0121253A | •732396 | 648,6 377 | ALB |
| 2.3 i V5 20V | 9C13 | E | 2324 | AQN | M | | TSW | 10/00 ▸ 05/01 | 1C0121253D | 732957 | 648,6 377 | ALB |
| 1.9 TDi | 9C13 ; 1C1/3/5/8 | D | 1896 | ALH,ATD | M | +/- | TSW | 11/98 ▸ 05/01 | 1C0121253A | •732396 | 648,6 377 | ALB |
| 1.9 TDi | 9C13 ; 1C1/3/5/8 | D | 1896 | ALH | A | +/- | TSW | 11/98 ▸ 05/01 | 1C0121253A | •732396 | 648,6 377 | ALB |

## NEW BEETLE (2001>2005)

| | | | | | | | | | | | | |
|---|---|---|---|---|---|---|---|---|---|---|---|---|
| 1.4 i 16V | 1C13 ; 1Y73 | E | 1390 | BCA | M | +/- | TSW | 08/01 ▸ 06/05 | 1C0121253A | •732396 | 648,6 377 | ALB |
| 1.6 i | 1Y73 ; 9C13 ; 1C1/3 | E | 1595 | AYD,BFS | M | +/- | TSW | 06/01 ▸ 06/05 | 1C0121253A | •732396 | 648,6 377 | ALB |
| 1.6 i | 1C13 ; 9C13 | E | 1595 | AYD,BFS | A | +/- | TSW | 06/01 ▸ 06/05 | 1C0121253A | •732396 | 648,6 377 | ALB |
| 1.8 i Turbo 20V | 1Y73 ; 9C13 ; 1C1/3 6/7/8/S | E | 1781 | AWP,AWU,AWV | M | +/- | TSW | 06/01 ▸ 06/05 | 1C0121253C | •732396 | 648,6 377 | ALB |
| 1.8 i Turbo 20V | 9C13 ; 1C1/3/5/8/S | E | 1781 | AWU,AWV,BKF | A | +/- | TSW | 06/01 ▸ 06/05 | 1C0121253C | •732396 | 648,6 377 | ALB |
| 2.0 i | 1C1/3/5/8 ; 9C13 ; 1Y7/3/5 | E | 1984 | AEG,APK,AQY,AZJ,BEJ,BER,BEV | M | +/- | TSW | 06/01 ▸ 06/05 | 1C0121253A | •732396 | 648,6 377 | ALB |
| 2.0 i | 1C1/3/5/8 ; 9C13 ; 1Y7/3/5 | E | 1984 | AEG,APK,AQY,AZJ,BEJ,BER,BEV | A | +/- | TSW | 06/01 ▸ 06/05 | 1C0121253A | •732396 | 648,6 377 | ALB |
| 2.3 i V5 20V | 1C13 ; 9C13 | E | 2324 | AQN | M | | TSW | 06/01 ▸ 06/05 | 1C0121253D | 732957 | 648,6 377 | ALB |
| 1.9 TDi | 1Y73 ; 9C13 ; 1C1/3 | D | 1896 | ALH,ATD,AXR | M | +/- | TSW | 06/01 ▸ 06/05 | 1C0121253A | •732396 | 648,6 377 | ALB |
| 1.9 TDi | 1C13 ; 9C13 | D | 1896 | ALH | A | +/- | TSW | 06/01 ▸ 06/04 | 1C0121253A | •732396 | 648,6 377 | ALB |

## NEW BEETLE (2005>)

| | | | | | | | | | | | | |
|---|---|---|---|---|---|---|---|---|---|---|---|---|
| 1.4 i 16V | 1C13 ; 1Y73 | E | 1390 | BCA | M | +/- | TSW | 07/05 ▸ 09/10 | 1C0121253A | •732396 | 648,6 377 | ALB |
| 1.6 i | 1C13 ; 1Y73 | E | 1595 | BFS | M | +/- | TSW | 07/05 ▸ | 1C0121253A | •732396 | 648,6 377 | ALB |
| 1.6 i | 1C13 | E | 1595 | BFS | A | +/- | TSW | 07/05 ▸ 12/10 | 1C0121253A | •732396 | 648,6 377 | ALB |
| 1.8 i Turbo 20V | 1C13 ; 1Y73 | E | 1781 | AWU | M | +/- | TSW | 07/05 ▸ 09/10 | 1C0121253C | •732396 | 648,6 377 | ALB |
| 1.8 i Turbo 20V | 1C13 | E | 1781 | AWU | A | +/- | TSW | 07/05 ▸ 12/07 | 1C0121253C | •732396 | 648,6 377 | ALB |
| 2.0 i | 1Y73 ; 1C1/3/5 | E | 1984 | AZJ,BER,BHP | M | +/- | TSW | 07/05 ▸ 09/10 | 1C0121253A | •732396 | 648,6 377 | ALB |
| 2.0 i | 1Y73 ; 1C1/3/5 | E | 1984 | AZJ,BER,BHP | A | +/- | TSW | 07/05 ▸ 09/10 | 1C0121253A | •732396 | 648,6 377 | ALB |
| 2.5 i 20V | 1Y75 | E | 2451 | BPR,BPS | M | | TSW | 07/05 ▸ | 1C0121253D | 732957 | 648,6 377 | ALB |
| 2.5 i 20V | 1Y75 | E | 2451 | BPR,BPS | A | | TSW | 07/05 ▸ 09/10 | 1C0121253D | 732957 | 648,6 377 | ALB |
| 1.9 TDi | 1Y73 ; 1C1/3/4/5 | D | 1896 | BSW | M | +/- | TSW | 07/05 ▸ 09/10 | 1C0121253A | •732396 | 648,6 377 | ALB |
| 1.9 TDi | 1C1/4/5 | D | 1896 | BEW | A | +/- | TSW | 07/05 ▸ 12/06 | 1C0121253A | •732396 | 648,6 377 | ALB |

## PASSAT (73>82)

| | | | | | | | | | | | | |
|---|---|---|---|---|---|---|---|---|---|---|---|---|
| 1.3 | 321/2 ; 3320 ; 331/0/1/2 | E | 1272 | FY,FZ | M | - | | 01/78 ▸ 07/81 | 321121253D | | 380 340 | ALM |
| 1.3 | 3220 ; 321/0/1 ; 3240 ; 323/0/1 | E | 1297 | ZA,ZF | M | + | | 05/73 ▸ 07/80 | 321121253D | | 380 340 | ALM |
| 1.3 | 3211 | E | 1297 | ZF | M | + | | 05/73 ▸ 07/77 | 823121251D | | 430 340,5 | ALM |
| 1.3 | 3220 ; 3231 ; 3240 ; 321/1 | E | 1297 | ZA,ZF | M | - | | 05/73 ▸ 07/80 | 321121253C | | 430 340,5 | ALM |
| 1.3 | 3220 ; 321/0 ; 3240 ; 323/0/1 | E | 1297 | ZA,ZF | M | | | 05/73 ▸ 07/77 | 321121253C | | 430 340,5 | ALM |
| 1.5 | 321/0/1 | E | 1471 | ZB | M | + | | 05/73 ▸ 07/74 | 321121253D | | 380 340 | ALM |
| 1.5 | 321/0/2 | E | 1471 | YJ,ZC | M | + | | 09/75 ▸ 12/75 | 823121251D | | 430 340,5 | ALM |
| 1.5 | 321/0/2 | E | 1471 | YJ,ZC | M | - | | 09/75 ▸ 12/75 | 321121253C | | 430 340,5 | ALM |
| 1.5 | 321/0/1 | E | 1471 | ZB | M | | | 05/73 ▸ 07/74 | 321121253C | | 430 340,5 | ALM |
| 1.5 | 3211 | E | 1471 | ZB | A | + | | 05/73 ▸ 07/74 | 321121253D | | 380 340 | ALM |
| 1.5 | 3210 | E | 1471 | YJ,ZB,ZC | A | + | | 05/73 ▸ 12/75 | 823121251D | | 430 340,5 | ALM |
| 1.5 | 3210 | E | 1471 | YJ,ZC | A | + | | 05/73 ▸ 12/75 | 321121253C | | 430 340,5 | ALM |
| 1.5 | 3210 | E | 1471 | YJ,ZB,ZC | A | - | | 05/73 ▸ 12/75 | 321121253C | | 430 340,5 | ALM |
| 1.5 | 3211 | E | 1471 | ZB | A | | | 05/73 ▸ 07/74 | 321121253C | | 430 340,5 | ALM |
| 1.6 | 3231 ; 3245 | E | 1588 | WP,YG | M | + | | 09/75 ▸ 07/77 | 823121251D | | 430 340,5 | ALM |
| 1.6 | 3225 ; 321/0/1/2/5 ; 323/2/5/7 ; 331/1/2/5 | E | 1588 | FS,WP,WY,WZ,YN,YP,YS,YY | M | + | | 09/75 ▸ 07/82 | 321121253D | | 380 340 | ALM |
| 1.6 | 3225 ; 321/0/1/2/5 ; 3245 ; 323/1/2/5/7 331/1/2/5 | E | 1588 | FS,WP,WY,WZ,YG,YN,YP,YS,YY | M | - | | 09/75 ▸ 07/82 | 321121253C | | 430 340,5 | ALM |
| 1.6 | 3245 | E | 1588 | WP | M | - | | 09/75 ▸ 07/77 | 823121251D | | 430 340,5 | ALM |
| 1.6 | 3225 ; 3232 ; 321/0/5 | E | 1588 | WP,WY,WZ,YS,YY | M | | | 02/79 ▸ 07/81 | 321121253C | | 430 340,5 | ALM |
| 1.6 | 321/1/5 ; 323/0/7 | E | 1588 | WY,YN,YP | A | + | | 09/75 ▸ 07/82 | 321121253D | | 380 340 | ALM |
| 1.6 | 3210 | E | 1588 | YP | A | + | | 09/75 ▸ 07/77 | 321121253C | | 430 340,5 | ALM |
| 1.6 | 321/1/5 ; 323/0/7 | E | 1588 | WY,YN,YP | A | - | | 09/75 ▸ 07/82 | 321121253C | | 430 340,5 | ALM |
| 1.6 | 3215 ; 3237 | E | 1588 | WY | A | | | 08/80 ▸ 07/81 | 321121253C | | 430 340,5 | ALM |
| 1.9 | 3236 | E | 1921 | WN | M | - | TSW | 01/81 ▸ 07/81 | 321121253BQ | 883864 | 470 377,5 | ALM |
| 1.9 | 3236 | E | 1921 | WN | A | - | TSW | 01/81 ▸ 07/81 | 321121253BQ | 883864 | 470 377,5 | ALM |
| 2.2 | 3215 | E | 2144 | WE | M | + | | 09/75 ▸ 07/80 | 321121253D | | 380 340 | ALM |
| 2.2 | 3215 | E | 2144 | WE | M | - | | 09/75 ▸ 07/80 | 321121253C | | 430 340,5 | ALM |
| 2.2 | 3216 | E | 2144 | WE | M | - | TSW | 01/81 ▸ 07/81 | 321121253AG | 883864 | 470 377,5 | ALM |
| 2.2 | 3216 | E | 2144 | WE | A | - | TSW | 01/81 ▸ 07/81 | 321121253AG | 883864 | 470 377,5 | ALM |
| 1.5 D | 3311 | D | 1471 | CK | M | - | | 08/77 ▸ 07/80 | 321121253B | | 430 340,5 | ALM |
| 1.6 D | 3216 | D | 1588 | CR | M | - | | 08/80 ▸ 07/81 | 321121253B | | 430 340,5 | ALM |

## PASSAT (82>88)

| | | | | | | | | | | | | |
|---|---|---|---|---|---|---|---|---|---|---|---|---|
| 1.3 | 331/5/6/7 ; 332/5/6/7 | E | 1272 | FY,FZ | M | +/- | | 08/81 ▸ 07/83 | 171121253BD | | 430 322 | ALM |

Radiator Radiateur Motorkühler Radiatore di raffreddamento Radiator Radyatör Radiador Радиатор vízhűtő Vodní chladič Radiator Ψυγείο



• **New** Nouveau **Nuevo** Novo **Nuovo** Nieuw **Neu** Nowość **Yeni** Новый Νέο **Novy**

## PASSAT (82>88) (.../...)

| | | | CC | | | AC | | | | Valeo | DIM. | | TECH |
|---|---|---|---|---|---|---|---|---|---|---|---|---|---|
| 1.3 | 323/7 ; 324/5/6/7 | E | 1272 | FY | M | - | | 08/81 ▸ 07/82 | 321121253D | | 380 | 340 | ALM |
| 1.3 | 321/5/6/7 ; 322/5/7 ; 323/5/6/7 | E | 1272 | FY,FZ | M | - | | 08/82 ▸ 07/83 | 171121253BD | | 430 | 322 | ALM |
| 1.3 | 321/0/1/5/6 ; 323/0/1/2/5/6/7/R/S ; 327/R/S 331/0/1/5/6/7/R/S | E | 1297 | EP,EU | M | - | TSW | 08/83 ▸ 04/88 | 171121253CJ | 883819 | 430 | 322 | ALM |
| 1.3,1.3 i | 323/6 ; 331/6/7 | E | 1297 | EU | A | - | TSW | 08/83 ▸ 07/84 | 171121253CJ | 883819 | 430 | 322 | ALM |
| 1.6 | 321/5/6/7/A/B/C ; 322/5/6/7 ; 323/5/6/7/A/B C ; 324/5/6 ; 331/5/6/7/A/B/C ; 332/5/6/7/A B/C | E | 1588 | WV,WY,YP | M | + | | 08/81 ▸ 04/88 | 321121251AS | | 700 | 322 | ALM |
| 1.6 | 324/5/6/7/A/B/C | E | 1588 | WV,YP | M | + | | 08/81 ▸ 07/82 | 321121253D | | 380 | 340 | ALM |
| 1.6 | 331/5/6/7/B ; 332/5/B | E | 1588 | WV,WY | M | + | | 08/83 ▸ 07/84 | 321121251AL | | 700 | 322 | ALM |
| 1.6 | 321/5/6/7/A/B/C ; 322/5/6/7 ; 3245 ; 323/5/6 7/A/B/C ; 331/5/6/7/A/B/C ; 332/5/6/7/A/B/C | E | 1588 | WV | M | - | | 08/81 ▸ 07/83 | 321121253H | | 525 | 322 | ALM |
| 1.6 | 3247 | E | 1588 | YP | M | - | | 08/81 ▸ 07/82 | 321121253D | | 380 | 340 | ALM |
| 1.6 | 324/5/6/7/A/B/C | E | 1588 | WV,YP | M | - | | 08/81 ▸ 07/82 | 321121253C | | 430 | 340,5 | ALM |
| 1.6 | 331/5/6/7/B ; 332/5/B | E | 1588 | WV,WY | M | | TSW | 08/81 ▸ 07/84 | 171121253CJ | 883819 | 430 | 322 | ALM |
| 1.6 | 324/5/6/7 | E | 1588 | WV,YP | A | + | | 08/81 ▸ 07/82 | 321121253D | | 380 | 340 | ALM |
| 1.6 | 321/5/6/7 ; 322/5/6/7 ; 3246 ; 323/5/6/7 331/5/6/7 ; 332/5/6/7 | E | 1588 | WV,WY,YP | A | + | | 08/81 ▸ 12/84 | 321121251AS | | 700 | 322 | ALM |
| 1.6 | 331/5/6/7 | E | 1588 | WV | A | + | | 08/83 ▸ 07/84 | 321121251AL | | 700 | 322 | ALM |
| 1.6 | 324/5/6/7 | E | 1588 | WV,YP | A | - | | 08/81 ▸ 07/82 | 321121253C | | 430 | 340,5 | ALM |
| 1.6 | 331/5/6/7 | E | 1588 | WV | A | | TSW | 08/83 ▸ 07/84 | 171121253CJ | 883819 | 430 | 322 | ALM |
| 1.6 | 321/5/6/7 ; 322/5/6/7 ; 323/5/6/7 ; 331/5/6 7 ; 332/5/7 ▸ 32D300000 | E | 1588 | WV | A | - | | 08/81 ▸ 07/83 | 321121253H | | 525 | 322 | ALM |
| 1.6 | 331/0/1/6/7/C/T ; 332/0/5 | E | 1595 | DT | M | + | TSW | 08/84 ▸ 04/88 | 321121253AL | 883727 | 525 | 322 | ALM |
| 1.6 | 321/0/1/2 ; 323/0/1/2/D/J/K/L/R/S/T ; 324/0 R ; 328R ; 327/R/S/T ; 331/K/L | E | 1595 | DT,DTA,PP | M | + | | 08/84 ▸ 04/88 | 321121251AL | | 700 | 322 | ALM |
| 1.6 | 321/0/1/2 ; 323/0/1/2/D/J/K/L/R/S/T ; 324/0 R ; 328R ; 327/R/S/T ; 331/0/1/6/7/C/D/K/L/R S/T ; 332/0/5 | E | 1595 | DT,DTA,JU,PP | M | - | TSW | 08/84 ▸ 04/88 | 171121253CJ | 883819 | 430 | 322 | ALM |
| 1.6 | 321/0/1/2 ; 323/0/1/2/D/R/S/T ; 324/0/R 328R ; 327/R/S/T ; 331/0/1/6/7/C/D/T ; 332 0/5 | E | 1595 | DT,DTA | M | - | TSW | 08/84 ▸ 04/88 | 321121253BM | 883720 | 525 | 322 | ALM |
| 1.6 | 321/0/1/2 ; 323/0/1/2/R/S/T ; 327/R/S/T | E | 1595 | DT | A | + | | 08/84 ▸ 07/86 | 321121251AL | | 700 | 322 | ALM |
| 1.6 | 331/0/1/R/S/T | E | 1595 | DT | A | + | TSW | 08/84 ▸ 07/86 | 321121253AL | 883727 | 525 | 322 | ALM |
| 1.6 | 321/0/1/2 ; 323/0/1/2/D/R/S/T ; 327/R/S/T 331/0/1/D/R/S/T | E | 1595 | DT | A | - | TSW | 08/84 ▸ 04/88 | 321121253BM | 883720 | 525 | 322 | ALM |
| 1.6 | 321/0/1/2 ; 323/0/1/2/D/R/S/T ; 327/R/S/T 331/0/1/D/R/S/T | E | 1595 | DT | A | - | TSW | 08/84 ▸ 04/88 | 171121253CJ | 883819 | 430 | 322 | ALM |
| 1.8,1.8 i | 321/0/1/2 ; 324S 323/0/1/2/D/E/G/H/J/K/L/R/S/T ; 327/7/J/K/L R/S/T ; 328/S/T ; 331/0/1/E/G/H/J/K/L/R/S/T U/Y ; 332/1/S | E | 1781 | DS,JN,JV,RM | M | + | | 08/83 ▸ 07/88 | 321121251AL | | 700 | 322 | ALM |
| 1.8 | 321/0/1/2/6 ; 323/0/1/2/D/R/S/T ; 324/D/S 327/7/R/S/T ; 328/S/T ; 331/0/1/D/R/S/T 332/1/S | E | 1781 | DS,JV,RM | M | - | TSW | 08/83 ▸ 04/88 | 171121253CJ | 883819 | 430 | 322 | ALM |
| 1.8,1.8 i | 321/0/1/2 ; 323/0/1 2/D/E/G/H/J/K/L/R/S/T ; 324/D/S ; 327/J/K/L R/S/T ; 328/S/T ; 331/0/1/D/E/G/H/J/K/L/R/S T ; 332/1/S | E | 1781 | DS,JN,JV,RM | M | - | TSW | 08/84 ▸ 04/88 | 321121253BM | 883720 | 525 | 322 | ALM |
| 1.8 | 331Y | E | 1781 | JN | M | | TSW | 08/85 ▸ 07/88 | 321121253BM | 883720 | 525 | 322 | ALM |
| 1.8 | 331U | E | 1781 | DS | M | | TSW | 08/85 ▸ 07/88 | 171121253CJ | 883819 | 430 | 322 | ALM |
| 1.8,1.8 i | 321/0/1/2 ; 324S 323/0/1/2/E/G/H/J/K/L/R/S/T ; 327/7/J/K/L/R S/T ; 328/S/T ; 331/0/1/E/G/H/J/K/L/R/S/T 332/1/S | E | 1781 | DS,JN,JV,RM | A | + | | 08/83 ▸ 04/88 | 321121251AL | | 700 | 322 | ALM |
| 1.8 | 321/0/1/2 ; 324S ; 323/0/1/2/D/R/S/T ; 327/7 R/S/T ; 328/S/T ; 331/0/1/D/R/S/T ; 332/1/S | E | 1781 | DS,JV,RM | A | - | TSW | 08/83 ▸ 04/88 | 171121253CJ | 883819 | 430 | 322 | ALM |
| 1.8,1.8 i | 321/0/1/2 ; 324S 323/0/1/2/D/E/G/H/J/K/L/R/S/T ; 327/J/K/L/R S/T ; 328/S/T ; 331/0/1/D/E/G/H/J/K/L/R/S/T 332/1/S | E | 1781 | DS,JN,JV,RM | A | - | TSW | 08/84 ▸ 04/88 | 321121253BM | 883720 | 525 | 322 | ALM |
| 1.9 | 321/5/7 ; 331/6/7 ; 332/5/6 | E | 1921 | WN | M | + | TSW | 08/81 ▸ 07/83 | 321121253BQ | 883864 | 470 | 377,5 | ALM |
| 1.9 | 3315 ; 3327 ; 321/6 | E | 1921 | WN | M | + | TSW | 08/81 ▸ 07/83 | 321121253AG | 883864 | 470 | 377,5 | ALM |
| 1.9 | 321/6 ; 323/5/6/7 ; 3315 ; 3327 ; 324/5/6/7 | E | 1921 | WN | M | - | TSW | 08/81 ▸ 07/83 | 321121253BQ | 883864 | 470 | 377,5 | ALM |
| 1.9 | 321/5/7 ; 331/6/7 ; 332/5/6 | E | 1921 | WN | M | - | TSW | 08/81 ▸ 07/83 | 321121253AG | 883864 | 470 | 377,5 | ALM |
| 1.9 | 3316 ; 321/5/7 ; 332/6/7 | E | 1921 | WN | A | + | TSW | 08/81 ▸ 07/83 | 321121253BQ | 883864 | 470 | 377,5 | ALM |
| 1.9 | 3235 ; 321/6 ; 3325 ; 331/5/7 | E | 1921 | WN | A | + | TSW | 08/81 ▸ 07/84 | 321121253AG | 883864 | 470 | 377,5 | ALM |
| 1.9 | 3316 ; 321/5/7 ; 332/6/7 | E | 1921 | WN | A | - | TSW | 08/81 ▸ 07/83 | 321121253AG | 883864 | 470 | 377,5 | ALM |

# VOLKSWAGEN (.../...)

## PASSAT (82>88) (.../...)

| Type Ctr. | CC | | AC | | 2+3 | OE | Valeo | DIM. | TECH |
|---|---|---|---|---|---|---|---|---|---|
| 1.9 321/6 ; 323/5/6/7 ; 324/5/6/7 ; 3325 ; 331/5/7 | E | 1921 | WN | A | - | TSW | 08/81 ▸ 07/84 | 321121253BQ | **883864** | 470 377,5 | ALM |
| 2.0 i 323/1/2/6/7/A/D/T ; 324/1/2/D/R/T ; 327/C/T 328/C/T ; 331/1/6/7/R/T ; 332/A/D/R/T | E | 1994 | HP,JS | M | + | TSW | 08/83 ▸ 04/88 | 321121253AG | **883864** | 470 377,5 | ALM |
| 2.0 i 324A ; 323/1/7/R ; 328R ; 327/C/R ; 331/6/7/D | E | 1994 | HP,JS | M | + | TSW | 08/83 ▸ 04/88 | 321121253BQ | **883864** | 470 377,5 | ALM |
| 2.0 i 323/1/2/6/7/A/D/T ; 324/1/2/D/R/T ; 327/C/T 328/C/T ; 331/1/6/7/R/T ; 332/A/D/R/T | E | 1994 | HP,JS | M | - | TSW | 08/83 ▸ 04/88 | 321121253BQ | **883864** | 470 377,5 | ALM |
| 2.0 i 324A ; 323/1/7/R ; 328R ; 327/C/R ; 331/6/7/D | E | 1994 | HP,JS | M | - | TSW | 08/83 ▸ 04/88 | 321121253AG | **883864** | 470 377,5 | ALM |
| 2.0 i 331/8/P/V/W | E | 1994 | HP,JS | M | | TSW | 08/84 ▸ 07/88 | 321121253BQ | **883864** | 470 377,5 | ALM |
| 2.0 i 323/1/2/6/A/R/T ; 327C ; 328R ; 324/1/2/R 332R ; 331/7/A/D/R | E | 1994 | HP,JS | A | + | TSW | 08/83 ▸ 04/88 | 321121253BQ | **883864** | 470 377,5 | ALM |
| 2.0 i 323/1/2/6/7/D/R ; 324/A/D/R/T ; 327/C/R/T 328/C/T ; 331/1/6/R/T ; 332/A/D/R/T | E | 1994 | HP,JS | A | + | TSW | 08/83 ▸ 04/88 | 321121253AG | **883864** | 470 377,5 | ALM |
| 2.0 i 323/1/2/6/7/D/R ; 324/A/D/R/T ; 327/C/R/T 328/C/T ; 331/1/6/R/T ; 332/A/D/R/T | E | 1994 | HP,JS | A | - | TSW | 08/83 ▸ 04/88 | 321121253BQ | **883864** | 470 377,5 | ALM |
| 2.0 i 323/1/2/6/A/R/T ; 327C ; 328R ; 324/1/2/R 332R ; 331/7/A/D/R | E | 1994 | HP,JS | A | - | TSW | 08/83 ▸ 04/88 | 321121253AG | **883864** | 470 377,5 | ALM |
| 2.2,2.2 i 321/5/6/7 ; 323/5/6 7 ; 331/5/6/7 | E | 2144 | WE | M | - | TSW | 08/81 ▸ 07/83 | 321121253AG | **883864** | 470 377,5 | ALM |
| 2.2,2.2 i 321/5/6/7 ; 323/5/6 7 ; 331/5/6/7 | E | 2144 | WE | A | - | TSW | 08/81 ▸ 07/83 | 321121253AG | **883864** | 470 377,5 | ALM |
| 2.3,2.3 i 324K ; 323/D/E/J/K 328K ; 327/F/J/K ; 332K ; 331/D/E/J/K | E | 2226 | KV,KX | M | - | TSW | 01/85 ▸ 04/88 | 321121253AG | **883864** | 470 377,5 | ALM |
| 2.3 331/8/Q/W/Z | E | 2226 | HY,JT | M | | TSW | 08/84 ▸ 07/88 | 321121253AG | **883864** | 470 377,5 | ALM |
| 2.3 i 324K ; 323/E/J/K ; 328K ; 327/F/J/K ; 332K 331/E/J/K | E | 2226 | KX | A | - | TSW | 08/85 ▸ 04/88 | 321121253AG | **883864** | 470 377,5 | ALM |
| 1.6 D,1.6 TD 321/0/1/2/5/6/7 322/5/6/7 ; 323/0/1/2/5/6/7/D/R/S/T ; 324/0 1/2/5/6/7/R/S/T ; 327/4/J/L/R/S/T ; 328/R/S T ; 331/0/1/5/6/7/D/R/S/T ; 332/0/1/5/6/7/R S/T | D | 1588 | CR,CY,JK | M | + | | 08/81 ▸ 04/88 | 321121253BL | | 700 319 | CBS |
| 1.6 D 3225 ; 321/0/1/2/6 ; 3240 ; 323/0/1/2/R | D | 1588 | CR,JK | M | + | | 08/82 ▸ 04/88 | 321121251AL | | 700 322 | ALM |
| 1.6 D 323/5/6/7 ; 324/5/6/7 ; 331/5/6/7 ; 332/5/6 7 | D | 1588 | CR | M | - | TSW | 08/81 ▸ 07/84 | 321121253BM | **883720** | 525 322 | ALM |
| 1.6 TD 3247 | D | 1588 | CY | M | - | | 12/81 ▸ 07/82 | 321121253B | | 430 340,5 | ALM |
| 1.6 D 321/0/1/2 ; 323/R/S/T ; 324/0/1/2/R/S/T 327/R/S/T ; 328/R/S/T ; 331/0/1/R/S/T ; 332 0/1/R/S | D | 1588 | JK | M | - | | 08/84 ▸ 04/88 | 321121251AL | | 700 322 | ALM |
| 1.6 D 321/5/6/7 ; 322/5/6/7 | D | 1588 | CR | M | | TSW | 08/82 ▸ 04/88 | 321121253BM | **883720** | 525 322 | ALM |
| 1.6 D 321/5/6/7 ; 322/5/6/7 | D | 1588 | CR | M | | | 08/82 ▸ 04/88 | 321121251AL | | 700 322 | ALM |
| 1.6 D,1.6 TD 321/0/1/2/5/6/7 322/5/6/7 ; 323/0/1/2/5/6/7/R/S/T ; 327/R/S T ; 331/0/1/5/6/7/R/S/T ; 332/5/6/7 | D | 1588 | CR,CY,JK | A | + | | 08/81 ▸ 04/88 | 321121253BL | | 700 319 | CBS |
| 1.6 D 3230 ; 331R | D | 1588 | JK | A | + | | 08/84 ▸ 04/88 | 321121251AL | | 700 322 | ALM |
| 1.6 D 323/5/6/7 ; 331/5/6/7 ; 332/5/6/7 | D | 1588 | CR | A | - | TSW | 08/81 ▸ 07/84 | 321121253BM | **883720** | 525 322 | ALM |
| 1.6 D,1.6 TD 323/7 ; 324/5/6/7 | D | 1588 | CR,CY | A | - | | 08/81 ▸ 07/82 | 321121253B | | 430 340,5 | ALM |
| 1.6 D 321/0/1/2 ; 323/1/2/R/S/T ; 327/R/S/T ; 331 0/1/S/T | D | 1588 | JK | A | - | | 08/84 ▸ 04/88 | 321121251AL | | 700 322 | ALM |
| 1.6 D 321/5/6/7 ; 322/5/6/7 | D | 1588 | CR | A | | TSW | 08/82 ▸ 04/88 | 321121253BM | **883720** | 525 322 | ALM |
| 1.6 D 321/5/6/7 ; 322/5/6/7 | D | 1588 | CR | A | | | 08/82 ▸ 04/88 | 321121251AL | | 700 322 | ALM |

## PASSAT (88>93)

| | | | | | | | | | | | |
|---|---|---|---|---|---|---|---|---|---|---|---|
| 1.6,1.6 i 312/2/3 ; 315/1/2/3 | E | 1595 | 1F,ABN,EZ,RF | M | + | TSW | 04/88 ▸ 07/92 | 357121253AB | **730629** | 722 322 | ALM |
| 1.6,1.6 i 312/1/2/3 ; 315/1/2 3 | E | 1595 | 1F,ABN,EZ,RF | M | - | TSW | 04/88 ▸ 07/92 | 353121253AC | **883870** | 525 322 | ALM |
| 1.6,1.6 i 312/1/2/3 ; 315/1/2 3 | E | 1595 | 1F,ABN,EZ,RF | M | - | TSW | 04/88 ▸ 07/92 | 353121253AA | **883869** | 430 322 | ALM |
| 1.6,1.6 i 312/1/2/3 | E | 1595 | 1F,ABN,EZ | M | - | TSW | 04/88 ▸ 07/92 | 357121253AB | **730629** | 722 322 | ALM |
| 1.6,1.6 i 312/2/3 ; 315/2/3 | E | 1595 | 1F,EZ,RF | A | + | TSW | 08/88 ▸ 07/89 | 357121253AB | **730629** | 722 322 | ALM |
| 1.6,1.6 i 312/2/3 ; 315/2/3 | E | 1595 | 1F,EZ,RF | A | - | TSW | 08/88 ▸ 07/90 | 353121253AA | **883869** | 430 322 | ALM |
| 1.6,1.6 i 3153 ; 312/2/3 | E | 1595 | 1F,EZ | A | - | TSW | 08/88 ▸ 07/90 | 357121253AB | **730629** | 722 322 | ALM |
| 1.6,1.6 i 312/2/3 ; 315/2/3 | E | 1595 | 1F,EZ,RF | A | - | TSW | 08/88 ▸ 07/90 | 353121253AC | **883870** | 525 322 | ALM |
| 1.8 i,1.8 i 16V 312/1/2/3/5 ; 315/1 2/3/5 | E | 1781 | AAM,ABS,KR,PB,PF,RP | M | + | TSW | 04/88 ▸ 10/93 | 357121253AB | **730629** | 722 322 | ALM |
| 1.8 312/3/5 ; 315/3/5 | E | 1781 | PG | M | + | TSW | 09/89 ▸ 10/93 | 353121253R | **732436** | 720 317 | ALM |
| 1.8 i 312/1/2/3/5 ; 315/1/5 | E | 1781 | AAM,ABS | M | + | TSW | 08/92 ▸ 10/93 | 357121251B | **730971** | 722 377,5 | ALM |
| 1.8 i,1.8 i 16V 312/1/2/3/5 ; 315/1 2/3/5 | E | 1781 | AAM,ABS,KR | M | - | TSW | 04/88 ▸ 10/93 | 353121253E | **883871** | 632 322 | ALM |

Radiator Radiateur Motorkühler Radiatore di raffreddamento Radiator Radyatör Radiator Радиатор Radiador Vodní chladič vízhűtő Ψυγείο



• **New** Nouveau **Nuevo** Novo **Nuovo** Nieuw **Neu** Nowość **Yeni** Новый Νέο **Novy**

## PASSAT (88>93) (.../...)

| Type Ctr. | CC | | | AC | | | OE | Valeo | DIM. | TECH |
|---|---|---|---|---|---|---|---|---|---|---|
| 1.8,1.8 i 312/1/2/3/5 ; 315/1/2 | E | 1781 | ABS,PF,RP | M | - | TSW | 04/88 ▸ 07/92 | 357121253AB | **730629** | 722 322 | ALM |
| 1.8,1.8 i 312/1/2/3/5 ; 315/1/2/3/5 | E | 1781 | AAM,ABS,PB,PF,RP | M | - | TSW | 04/88 ▸ 10/93 | 353121253AC | **883870** | 525 322 | ALM |
| 1.8 312/3/5 ; 315/3/5 | E | 1781 | PG | M | - | TSW | 09/89 ▸ 10/93 | 353121253N | **732438** | 630 317 | CBS |
| 1.8 i 312/1/2/3/5 ; 315/1/2/3/5 | E | 1781 | AAM,ABS | M | - | TSW | 08/90 ▸ 10/93 | 353121253F | **883871** | 632 322 | ALM |
| 1.8 i 312/1/2/3/5 ; 315/1/2/3/5 | E | 1781 | AAM,ABS | M | - | TSW | 08/90 ▸ 07/92 | 353121253AA | **883869** | 430 322 | ALM |
| 1.8 312/3/5 ; 315/3/5 | E | 1781 | PG | M | | TSW | 09/89 ▸ 10/93 | 1H0121253L | **731267** | 628 377,5 | ALM |
| 1.8 i 312/1/2/3/5 ; 315/1/2/3/5 | E | 1781 | ABS | M | | TSW | 08/90 ▸ 10/93 | 353121253E | **883871** | 632 322 | ALM |
| 1.8 i 312/1/2/5 ; 315/1/2/3/5 | E | 1781 | ABS | M | | TSW | 08/90 ▸ 07/92 | 353121253AC | **883870** | 525 322 | ALM |
| 1.8 i 315/1/2/3 | E | 1781 | AAM | M | | TSW | 08/92 ▸ 10/93 | 353121253AA | **883869** | 430 322 | ALM |
| 1.8 i 3152 | E | 1781 | PB | A | + | TSW | 08/88 ▸ 07/90 | 353121253AC | **883870** | 525 322 | ALM |
| 1.8 i,1.8 i 16V 312/1/2/3/5 ; 315/1/2/3/5 | E | 1781 | ABS,KR,PB,PF,RP | A | + | TSW | 08/88 ▸ 07/92 | 357121253AB | **730629** | 722 322 | ALM |
| 1.8 i 312/1/2/3/5 ; 315/1/2/3/5<br>31-P-000 001 ▸ | E | 1781 | ABS | A | + | TSW | 08/92 ▸ 10/93 | 357121251B | **730971** | 722 377,5 | ALM |
| 1.8,1.8 i 312/1/2/3/5 ; 315/2/3/5 | E | 1781 | ABS,PF,RP | A | - | TSW | 08/88 ▸ 07/92 | 357121253AB | **730629** | 722 322 | ALM |
| 1.8,1.8 i,1.8 i 16V 312/1/2/3/5 ; 315/1/2/3/5 | E | 1781 | ABS,KR,PF,RP | A | - | TSW | 08/88 ▸ 10/93 | 353121253E | **883871** | 632 322 | ALM |
| 1.8 i 312/1/2/3/5 ; 315/1/3/5 | E | 1781 | PB | A | - | TSW | 08/88 ▸ 07/90 | 353121253AC | **883870** | 525 322 | ALM |
| 1.8 i 315/2/3/5 | E | 1781 | RP | A | - | TSW | 08/88 ▸ 07/90 | 321121253AL | **883727** | 525 322 | ALM |
| 1.8,1.8 i 312/1/2/3/5 ; 315/1/2/3/5 | E | 1781 | ABS,PF,RP | A | - | TSW | 08/88 ▸ 07/92 | 353121253AL | **734415** | 525 310 | ALM |
| 1.8 i 312/1/2/3/5 ; 315/1/2/3/5<br>P-000 001 ▸ | E | 1781 | ABS | A | - | TSW | 08/92 ▸ 10/93 | 353121253F | **883871** | 632 322 | ALM |
| 1.8,1.8 i 312/1/2/3/5 ; 315/1/2/3/5<br>▸ N-500 000 | E | 1781 | ABS,PF,RP | A | | TSW | 08/88 ▸ 08/92 | 353121253AL | **734415** | 525 310 | ALM |
| 2.0,2.0 i,2.0 i 16V 312/1/2/3/5/8 ; 315/1/2/3/5/8 | E | 1984 | 2E,9A | M | + | TSW | 04/88 ▸ 10/93 | 357121253AB | **730629** | 722 322 | ALM |
| 2.0,2.0 i,2.0 i 16V 312/1/2/3/5/8 ; 315/1/2/3/5/8<br>31-P-000 001, P-000 001 ▸ | E | 1984 | 2E,9A,ACX | M | + | TSW | 08/92 ▸ 10/93 | 357121251B | **730971** | 722 377,5 | ALM |
| 2.0,2.0 i,2.0 i 16V 312/1/2/3/5/8 ; 315/1/2/3/5/8 | E | 1984 | 2E,9A,ACX | M | - | TSW | 04/88 ▸ 10/93 | 353121253E | **883871** | 632 322 | ALM |
| 2.0,2.0 i,2.0 i 16V 312/1/2/3/5/8 ; 315/1/2/3/5/8 | E | 1984 | 9A,ACX | M | - | TSW | 08/92 ▸ 10/93 | 353121253F | **883871** | 632 322 | ALM |
| 2.0,2.0 i 312/1/2/3/5 ; 315/1/2/3/5<br>31-P-000 001 ▸ | E | 1984 | 2E | M | | TSW | 08/90 ▸ 10/93 | 353121253F | **883871** | 632 322 | ALM |
| 2.0 312/2/3/5 ; 315/2/3/5 | E | 1984 | 2E | M | | TSW | 08/90 ▸ 10/93 | 353121253E | **883871** | 632 322 | ALM |
| 2.0,2.0 i,2.0 i 16V 312/1/2/3/5/8 ; 315/1/2/3/5/8 | E | 1984 | 2E,9A | A | + | TSW | 08/88 ▸ 10/93 | 357121253AB | **730629** | 722 322 | ALM |
| 2.0,2.0 i,2.0 i 16V 312/1/2/3/5/8 ; 315/1/2/3/5/8 | E | 1984 | 2E,9A | A | + | TSW | 09/91 ▸ 10/93 | 357121251B | **730971** | 722 377,5 | ALM |
| 2.0,2.0 i,2.0 i 16V 312/1/2/3/5/8 ; 315/1/2/3/5/8 | E | 1984 | 2E,9A | A | - | TSW | 08/88 ▸ 10/93 | 353121253F | **883871** | 632 322 | ALM |
| 2.8 i,2.8 i V6 312/3/5/8 ; 315/3/5/8 | E | 2792 | AAA | M | + | TSW | 06/91 ▸ 11/91 | 353121253R | **732436** | 720 317 | ALM |
| 2.8 i,2.8 i V6 312/3/5/8 ; 315/3/5/8<br>N-120 001 ▸ | E | 2792 | AAA | M | + | TSW | 11/91 ▸ 10/93 | 357121251B | **730971** | 722 377,5 | ALM |
| 2.8 i,2.8 i V6 312/3/5/8 ; 315/3/5/8 | E | 2792 | AAA | M | - | TSW | 06/91 ▸ 11/91 | 353121253N | **732438** | 630 317 | CBS |
| 2.8 i,2.8 i V6 312/3/5/8 ; 315/3/5/8<br>N-120 001 ▸ | E | 2792 | AAA | M | - | TSW | 11/91 ▸ 10/93 | 1H0121253L | **731267** | 628 377,5 | ALM |
| 2.8 i,2.8 i V6,2.8 i VR6 312/3/5/8 ; 315/3/5/8<br>N-120 001 ▸ | E | 2792 | AAA | A | + | TSW | 11/91 ▸ 10/93 | 357121251B | **730971** | 722 377,5 | ALM |
| 2.8 i,2.8 i V6,2.8 i VR6 312/3/5/8 ; 315/3/5/8<br>N-120 001 ▸ | E | 2792 | AAA | A | - | TSW | 11/91 ▸ 10/93 | 1H0121253L | **731267** | 628 377,5 | ALM |
| 2.8 i,2.8 i V6,2.8 i VR6 312/3/5/8 ; 315/3/5/8<br>▸ N-120 000 | E | 2792 | AAA | A | + | TSW | 06/91 ▸ 11/91 | 353121253R | **732436** | 720 317 | ALM |

# VOLKSWAGEN (.../...)

## PASSAT (88>93) (.../...)

| | | | CC | | AC | | | | OE | Valeo | DIM. | TECH |
|---|---|---|---|---|---|---|---|---|---|---|---|---|
| 2.8 i,2.8 i V6,2.8 i VR6 ▸ N-120 000 | 312/3/5/8 ; 315/3/5/8 | E | 2792 | AAA | A | - | TSW | 06/91 ▸ 11/91 | 353121253N | 732438 | 630 317 | CBS |
| 1.6 TD | 312/1/2/3/5 ; 315/1/2/3/5 | D | 1588 | RA,SB | M | + | TSW | 06/88 ▸ 10/93 | 353121253R | 732436 | 720 317 | ALM |
| 1.6 TD | 312/1/2/3/5 | D | 1588 | SB | M | + | | 08/92 ▸ 10/93 | 321121253B | | 430 340,5 | ALM |
| 1.6 TD | 312/1/2/3/5 ; 315/2/3 | D | 1588 | SB | M | + | TSW | 08/92 ▸ 10/93 | 357121251B | 730971 | 722 377,5 | ALM |
| 1.6 TD | 312/1/2/3/5 ; 315/1/2/3/5 | D | 1588 | RA,SB | M | - | TSW | 06/88 ▸ 10/93 | 353121253F | 883871 | 632 322 | ALM |
| 1.6 TD | 3155 | D | 1588 | SB | M | - | TSW | 10/91 ▸ 07/92 | 353121253R | 732436 | 720 317 | ALM |
| 1.6 TD | 312/1/2/3/5 | D | 1588 | SB | M | - | | 08/92 ▸ 10/93 | 321121253B | | 430 340,5 | ALM |
| 1.6 TD | 315/1/5 | D | 1588 | SB | M | - | TSW | 08/92 ▸ 10/93 | 357121251B | 730971 | 722 377,5 | ALM |
| 1.6 TD | 312/2/3/5 ; 315/2/3/5 | D | 1588 | RA | A | + | TSW | 08/88 ▸ 07/90 | 353121253R | 732436 | 720 317 | ALM |
| 1.6 TD | 312/2/3/5 ; 315/2/3/5 | D | 1588 | RA | A | - | TSW | 08/88 ▸ 07/90 | 353121253F | 883871 | 632 322 | ALM |
| 1.9 D | 312/1/2/3 ; 315/1/2/3 | D | 1896 | 1Y | M | + | TSW | 08/88 ▸ 10/93 | 353121253R | 732436 | 720 317 | ALM |
| 1.9 TD | 312/1/2/3/8 ; 315/1/2/3 | D | 1896 | AAZ | M | + | TSW | 03/91 ▸ 10/93 | 357121251B | 730971 | 722 377,5 | ALM |
| 1.9 D | 312/1/2/3 ; 315/1/2/3 | D | 1896 | 1Y | M | + | TSW | 08/92 ▸ 10/93 | 1H0121253AE | 732437 | 628 377 | ALM |
| 1.9 D | 312/1/2/3 ; 315/1/2/3 | D | 1896 | 1Y | M | - | TSW | 08/88 ▸ 10/93 | 353121253F | 883871 | 632 322 | ALM |
| 1.9 D | 312/1/2 ; 315/1/2/3 | D | 1896 | 1Y | M | - | TSW | 08/89 ▸ 10/93 | 353121253R | 732436 | 720 317 | ALM |
| 1.9 D,1.9 TD | 312/1/2/3/8 ; 315/1/2/3 | D | 1896 | 1Y,AAZ | M | - | TSW | 03/91 ▸ 10/93 | 1H0121253AE | 732437 | 628 377 | ALM |
| 1.9 D | 312/2/3 ; 315/2/3 | D | 1896 | 1Y | A | + | TSW | 08/88 ▸ 07/90 | 353121253R | 732436 | 720 317 | ALM |
| 1.9 TD | 312/1/2/3 ; 315/1/2/3 | D | 1896 | AAZ | A | + | TSW | 03/91 ▸ 10/93 | 357121251B | 730971 | 722 377,5 | ALM |
| 1.9 D | 312/2/3 ; 315/2/3 | D | 1896 | 1Y | A | - | TSW | 08/88 ▸ 07/90 | 353121253F | 883871 | 632 322 | ALM |
| 1.9 D | 3153 | D | 1896 | 1Y | A | - | TSW | 08/89 ▸ 07/90 | 353121253R | 732436 | 720 317 | ALM |
| 1.9 TD | 312/1/2/3 ; 315/1/2/3 | D | 1896 | AAZ | A | - | TSW | 03/91 ▸ 10/93 | 1H0121253AE | 732437 | 628 377 | ALM |

## PASSAT (93>97)

| | | | | | | | | | | | | |
|---|---|---|---|---|---|---|---|---|---|---|---|---|
| 1.6 i | 3A2/2/3/5/A ; 3A5/2/3/5/C | E | 1598 | AEK,AFT | M | + | TSW | 10/94 ▸ 12/96 | 3A0121253C | 731006 | 722 377,5 | ALM |
| 1.6 i | 3A2/2/3/5/A ; 3A5/2/3/5/C | E | 1598 | AEK,AFT | M | | TSW | 10/94 ▸ 12/96 | 3A0121253 | 731005 | 525 377,5 | ALM |
| 1.6 i | 3A2/2/3/5 ; 3A5/2/3/5 | E | 1598 | AEK,AFT | A | + | TSW | 10/94 ▸ 12/96 | 3A0121253AB | 731008 | 722 377,5 | ALM |
| 1.6 i | 3A2/2/3/5 ; 3A5/2/3/5 | E | 1598 | AEK,AFT | A | - | TSW | 10/94 ▸ 12/96 | 3A0121253AA | 731007 | 525 377,5 | ALM |
| 1.8 i | 3A2/2/3/5 ; 3A5/2/3/5 | E | 1781 | AAM,ABS,ADZ | M | + | TSW | 10/93 ▸ 12/96 | 3A0121253T | 731006 | 722 377,5 | ALM |
| 1.8 i | 3A2/2/3/5 ; 3A5/2/3/5 | E | 1781 | AAM,ABS,ADZ | M | | TSW | 10/93 ▸ 12/96 | 3A0121253 | 731005 | 525 377,5 | ALM |
| 1.8 i | 3A2/2/3/5 ; 3A5/2/3/5 | E | 1781 | ABS,ADZ | A | + | TSW | 10/93 ▸ 12/96 | 3A0121253AB | 731008 | 722 377,5 | ALM |
| 1.8 i | 3A2/2/3/5 ; 3A5/2/3/5 | E | 1781 | ABS,ADZ | A | - | TSW | 10/93 ▸ 12/96 | 3A0121253AA | 731007 | 525 377,5 | ALM |
| 2.0 i,2.0 i 16V | 3A2/2/3/5 ; 3A5/2/3/5 | E | 1984 | 2E,ABF,ACX,ADY,AEP,AGG | M | + | TSW | 10/93 ▸ 05/97 | 3A0121253T | 731006 | 722 377,5 | ALM |
| 2.0 i,2.0 i 16V | 3A2/2/3/5 ; 3A5/2/3/5 | E | 1984 | 2E,ABF,ACX,ADY,AEP,AGG | M | | TSW | 10/93 ▸ 05/97 | 3A0121253 | 731005 | 525 377,5 | ALM |
| 2.0 i | 3A2/2/3/5 ; 3A5/2/3/5 | E | 1984 | 2E,ACX,ADY,AEP,AGG | A | + | TSW | 10/93 ▸ 12/96 | 3A0121253AB | 731008 | 722 377,5 | ALM |
| 2.0 i | 3A53 | E | 1984 | ACX | A | + | TSW | 03/94 ▸ 02/95 | 3A0121253C | 731006 | 722 377,5 | ALM |
| 2.0 i | 3A2/2/3/5 ; 3A5/2/3/5 | E | 1984 | 2E,ACX,ADY,AEP,AGG | A | - | TSW | 10/93 ▸ 12/96 | 3A0121253AA | 731007 | 525 377,5 | ALM |
| 2.0 i | 3A53 | E | 1984 | ACX | A | | TSW | 03/94 ▸ 02/95 | 3A0121253 | 731005 | 525 377,5 | ALM |
| 2.8 i VR6 | 3A2/3/6 ; 3A5/3/6 | E | 2792 | AAA | M | | TSW | 10/93 ▸ 12/96 | 3A0121253C | 731006 | 722 377,5 | ALM |
| 2.8 i VR6 | 3A2/3/6 ; 3A5/3/6 | E | 2792 | AAA | A | | TSW | 10/93 ▸ 12/96 | 3A0121253C | 731006 | 722 377,5 | ALM |
| 2.9 i VR6 | 3A56 | E | 2861 | ABV | M | | TSW | 01/94 ▸ 05/97 | 3A0121253C | 731006 | 722 377,5 | ALM |
| 1.9 TDi | 3A2/2/3/5/A ; 3A5/2/3/5 | D | 1896 | 1Z,AFN,AHU | M | + | TSW | 10/93 ▸ 12/96 | 3A0121253AB | 731008 | 722 377,5 | ALM |
| 1.9 TDi | 3A2/2/3/5/A ; 3A5/2/3/5 | D | 1896 | 1Z,AFN,AHU | M | - | TSW | 10/93 ▸ 12/96 | 3A0121253AA | 731007 | 525 377,5 | ALM |
| 1.9 TD | 3A2/2/3 ; 3A5/2/3 | D | 1896 | AAZ | M | | TSW | 10/93 ▸ 12/96 | 3A0121253AB | 731008 | 722 377,5 | ALM |
| 1.9 TDi | 3A2/3/5 | D | 1896 | 1Z | A | + | TSW | 10/93 ▸ 07/96 | 3A0121253AB | 731008 | 722 377,5 | ALM |
| 1.9 TDi | 3A2/3/5 ; 3A5/2/3/5 | D | 1896 | 1Z,AFN | A | - | TSW | 10/93 ▸ 12/96 | 3A0121253AA | 731007 | 525 377,5 | ALM |
| 1.9 TDi | 3A2/2/3/5/A ; 3A5/2/3/5/A | D | 1896 | 1Z,AFN,AHU | A | | TSW | 10/93 ▸ 12/96 | 3A0121253AB | 731008 | 722 377,5 | ALM |

## PASSAT (96>2000)

| | | | | | | | | | | | | |
|---|---|---|---|---|---|---|---|---|---|---|---|---|
| 1.6 i | 3B23 | G | 1595 | AHL | M | + | TSW | 10/96 ▸ 06/99 | 8D0121251P | 732361 | 632 414,5 | ALM |
| 1.6 i | 3B23 | G | 1595 | AHL | M | | TSW | 10/96 ▸ 06/99 | 8D0121251BC | 731755 | 630 412,3 | ALM |
| 1.6 i | 3B2/3/A ; 3B5/3/A | E | 1595 | ADP,AHL,ANA,ARM | M | + | TSW | 10/96 ▸ 08/00 | 8D0121251P | 732361 | 632 414,5 | ALM |
| 1.6 i | 3B2/3/A ; 3B5/3/A | E | 1595 | ADP,AHL,ANA,ARM | M | - | TSW | 10/96 ▸ 08/00 | 8D0121251Q | 731537 | 632 414 | ALM |
| 1.6 i | 3B53 ; 3B2/3/A | E | 1595 | ADP,AHL,ANA,ARM | A | +/- | TSW | 10/96 ▸ 08/00 | 8D0121251BC | 731755 | 630 412,3 | ALM |
| 1.6 i | 3B2/3/A | E | 1595 | ADP,AHL,ANA,ARM | A | +/- | TSW | 10/96 ▸ | 8D0121251M | 731755 | 630 412,3 | ALM |

Radiator Radiateur Motorkühler Radiatore di raffreddamento Radiator Radyatör Radiador Радиатор vízhűtő Vodní chladič Radiator Ψυγείο



• **New** Nouveau **Nuevo** Novo **Nuovo** Nieuw **Neu** Nowość **Yeni** Новый Νέο **Novy**

# VOLKSWAGEN (.../...)

## PASSAT (96>2000) (.../...)

| | | | CC | | | AC | | | | Valeo | DIM. | TECH |
|---|---|---|---|---|---|---|---|---|---|---|---|---|
| 1.6 i | 3B53 | E | 1595 | AHL,ANA,ARM | A | - | TSW | 05/97 ▸ 08/00 | 8D0121251BC | 731755 | 630 412,3 | ALM |
| 1.6 i | 3B53 | E | 1595 | ADP,AHL,ANA,ARM | A | - | TSW | 05/97 ▸ | 8D0121251M | 731755 | 630 412,3 | ALM |
| 1.6 i | 3B23 ; 3B53 | E | 1595 | ARM | A | - | TSW | 07/99 ▸ 08/00 | 8D0121251Q | 731537 | 632 414 | ALM |
| 1.6 i | 3B23 ; 3B53 | E | 1595 | ADP,ARM | A | | TSW | 05/97 ▸ 08/00 | 8D0121251Q | 731537 | 632 414 | ALM |
| 1.8 i,1.8 i 20V<br>1.8 i Turbo 20V | 3B2/3/A ; 3B5/3/A | E | 1781 | ADR,AEB,AFY,ANB,APT,APU,ARG | M | + | TSW | 10/96 ▸ 08/00 | 8D0121251P | 732361 | 632 414,5 | ALM |
| 1.8 i,1.8 i 20V<br>1.8 i Turbo 20V | 3B2/3/A ; 3B5/3/A | E | 1781 | ADR,AEB,AFY,ANB,APT,APU,ARG | M | - | TSW | 10/96 ▸ 08/00 | 8D0121251Q | 731537 | 632 414 | ALM |
| 1.8 i,1.8 i 20V<br>1.8 i Turbo 20V | 3B2/3/A | E | 1781 | ADR,AEB,AFY,ANB,APT,APU,ARG | A | +/- | TSW | 10/96 ▸ | 8D0121251M | 731755 | 630 412,3 | ALM |
| 1.8 i,1.8 i 20V<br>1.8 i Turbo 20V | 3B53 ; 3B2/3/A | E | 1781 | ADR,AEB,AFY,ANB,APT,APU,ARG | A | +/- | TSW | 10/96 ▸ 08/00 | 8D0121251BC | 731755 | 630 412,3 | ALM |
| 1.8 i 20V,1.8 i Turbo 20V | 3B53 | E | 1781 | AEB,ANB,APT,APU,ARG | A | - | TSW | 05/97 ▸ 08/00 | 8D0121251BC | 731755 | 630 412,3 | ALM |
| 1.8 i,1.8 i 20V<br>1.8 i Turbo 20V | 3B53 | E | 1781 | ADR,AEB,AFY,ANB,APT,APU,ARG | A | - | TSW | 05/97 ▸ | 8D0121251M | 731755 | 630 412,3 | ALM |
| 2.3 i VR5 20V | 3B23 | E | 2324 | AGZ | M | +/- | TSW | 10/96 ▸ 08/98 | 8D0121251M | 731755 | 630 412,3 | ALM |
| 2.3 i VR5 20V | 3B23 ; 3B53 | E | 2324 | AGZ | M | + | TSW | 09/97 ▸ 08/00 | 8D0121251P | 732361 | 632 414,5 | ALM |
| 2.3 i VR5 20V | 3B23 ; 3B53 | E | 2324 | AGZ | M | - | TSW | 09/97 ▸ 08/00 | 8D0121251P | 732361 | 632 414,5 | ALM |
| 2.3 i VR5 20V | 3B23 ; 3B53 | E | 2324 | AGZ | M | - | TSW | 09/97 ▸ 04/98 | 8D0121251Q | 731537 | 632 414 | ALM |
| 2.3 i VR5 20V | 3B53 | E | 2324 | AGZ | M | | TSW | 09/97 ▸ 04/99 | 8D0121251Q | 731537 | 632 414 | ALM |
| 2.3 i VR5 20V | 3B23 | E | 2324 | AGZ | M | | TSW | 09/97 ▸ 08/98 | 8D0121251BC | 731755 | 630 412,3 | ALM |
| 2.3 i VR5 20V | 3B23 ; 3B53 | E | 2324 | AGZ | A | +/- | TSW | 10/96 ▸ | 8D0121251M | 731755 | 630 412,3 | ALM |
| 2.3 i VR5 20V | 3B23 ; 3B53 | E | 2324 | AGZ | A | +/- | TSW | 09/97 ▸ 08/00 | 8D0121251BC | 731755 | 630 412,3 | ALM |
| 2.3 i VR5 20V | 3B23 | E | 2324 | AGZ | A | - | TSW | 09/97 ▸ | 8D0121251M | 731755 | 630 412,3 | ALM |
| 2.3 i VR5 20V | 3B23 | E | 2324 | AGZ | A | - | TSW | 09/97 ▸ 08/00 | 8D0121251BC | 731755 | 630 412,3 | ALM |
| 2.8 i V6 30V | 3B2/6/B ; 3B5/6/B | E | 2771 | ACK,AGE,ALG,APR,AQD,ATX | M | +/- | TSW | 05/97 ▸ 08/00 | 8D0121251N | 731756 | 632 396 | ALM |
| 2.8 i V6 30V | 3B26 | E | 2771 | AQD | M | + | TSW | 01/99 ▸ 04/99 | 8D0121251P | 732361 | 632 414,5 | ALM |
| 2.8 i V6 30V | 3B26 | E | 2771 | AQD | M | - | TSW | 05/97 ▸ | 8D0121251M | 731755 | 630 412,3 | ALM |
| 2.8 i V6 30V | 3B26 | E | 2771 | AQD | M | | TSW | 01/99 ▸ 04/99 | 8D0121251BC | 731755 | 630 412,3 | ALM |
| 2.8 i V6 30V | 3B26 | E | 2771 | APR | M | | TSW | 01/99 ▸ 04/99 | 8D0121251N | 731756 | 632 396 | ALM |
| 2.8 i V6 30V | 3B2/6/B ; 3B5/6/B | E | 2771 | ACK,AGE,APR,AQD,ATX | A | +/- | TSW | 05/97 ▸ | 8D0121251L | 731757 | 630 412 | ALM |
| 2.8 i V6 30V | 3B2/6/B ; 3B5/6/B | E | 2771 | ACK,AGE,APR,AQD,ATX | A | +/- | TSW | 05/97 ▸ 08/00 | 8D0121251BB | 731757 | 630 412 | ALM |
| 2.8 i V6 30V | 3B26 ; 3B56 | E | 2771 | ACK,ALG,APR,AQD,ATX | A | | TSW | 05/97 ▸ 08/00 | 8D0121251L | 731757 | 630 412 | ALM |
| 2.8 i V6 30V | 3B26 ; 3B56 | E | 2771 | ALG,APR,ATX | A | | TSW | 06/97 ▸ 08/00 | 8D0121251BB | 731757 | 630 412 | ALM |
| 2.8 i V6 30V | 3B2/6 ; 3B5/6/B | E | 2771 | ACK,AQD | A | | TSW | 06/97 ▸ 04/99 | 8D0121251Q | 731537 | 632 414 | ALM |
| 1.9 TDi<br>3B-Y-419 085, Y 419 085 ▸ | 3B23 ; 3B53 | D | 1896 | AHH,ATJ,AVB,AVG | M | + | TSW | > ▸ 08/00 | 8D0121251AT | 732361 | 632 414,5 | ALM |
| 1.9 TDi | 3B2/3/A ; 3B5/3/A | D | 1896 | AFN,AHH,AHU,AJM,ATJ,AVB,AVG | M | - | TSW | 10/96 ▸ 08/00 | 8D0121251Q | 731537 | 632 414 | ALM |
| 1.9 TDi | 3B53 | D | 1896 | ATJ | M | - | TSW | 08/97 ▸ | 8D0121251M | 731755 | 630 412,3 | ALM |
| 1.9 TDi | 3B23 ; 3B53 | D | 1896 | ATJ,AVB | M | | TSW | 01/00 ▸ 08/00 | 8D0121251BC | 731755 | 630 412,3 | ALM |
| 1.9 TDi | 3B23 | D | 1896 | AFN,AHH,AHU | A | +/- | TSW | 10/96 ▸ | 8D0121251M | 731755 | 630 412,3 | ALM |
| 1.9 TDi | 3B23 ; 3B53 | D | 1896 | AFN,AHH,AHU,AJM | A | +/- | TSW | 10/96 ▸ 08/00 | 8D0121251BC | 731755 | 630 412,3 | ALM |
| 1.9 TDi | 3B53 | D | 1896 | AFN,AHH,AHU,ATJ | A | - | TSW | 05/97 ▸ 08/00 | 8D0121251BC | 731755 | 630 412,3 | ALM |
| 1.9 TDi | 3B53 | D | 1896 | AFN,AHH,AHU,ATJ | A | - | TSW | 05/97 ▸ | 8D0121251M | 731755 | 630 412,3 | ALM |
| 1.9 TDi | 3B23 ; 3B53 | D | 1896 | AJM,ATJ,AVG | A | | TSW | 03/99 ▸ 08/00 | 8D0121251Q | 731537 | 632 414 | ALM |
| 1.9 TDi | 3B23 ; 3B53 | D | 1896 | ATJ,AVG | A | | TSW | 08/99 ▸ 08/00 | 8D0121251BC | 731755 | 630 412,3 | ALM |
| 1.9 TDi<br>▸ Y 419 084, Y-419 084 | 3B2/3/A ; 3B5/3/A | D | 1896 | AFN,AHH,AHU,AJM,ATJ,AVB,AVG | M | + | TSW | 10/96 ▸ | 8D0121251P | 732361 | 632 414,5 | ALM |
| 2.5 TDi V6 | 3B26 ; 3B56 | D | 2496 | AFB,AKN | M | +/- | TSW | 09/99 ▸ 08/00 | 8D0121251N | 731756 | 632 396 | ALM |
| 2.5 TDi V6 | 3B26 | D | 2496 | AFB | M | + | TSW | 09/99 ▸ 08/00 | 8D0121251P | 732361 | 632 414,5 | ALM |
| 2.5 TDi V6 | 3B26 | D | 2496 | AFB | M | - | TSW | 09/99 ▸ 08/00 | 8D0121251Q | 731537 | 632 414 | ALM |
| 2.5 TDi V6 | 3B26 ; 3B56 | D | 2496 | AFB,AKN | A | +/- | TSW | 08/98 ▸ | 8D0121251L | 731757 | 630 412 | ALM |
| 2.5 TDi V6 | 3B26 ; 3B56 | D | 2496 | AFB,AKN | A | +/- | TSW | 08/98 ▸ 08/00 | 8D0121251BB | 731757 | 630 412 | ALM |
| 2.5 TDi V6 | 3B26 ; 3B56 | D | 2496 | AFB | A | - | TSW | 02/99 ▸ 08/00 | 8D0121251BB | 731757 | 630 412 | ALM |
| 2.5 TDi V6 | 3B26 ; 3B56 | D | 2496 | AFB,AKN | A | | TSW | 08/98 ▸ 08/00 | 8D0121251L | 731757 | 630 412 | ALM |

## PASSAT (2000>2005)

| | | | | | | | | | | | | |
|---|---|---|---|---|---|---|---|---|---|---|---|---|
| 1.6 i | 3B3/0/1/2 ; 3B6/0/1/2 | E | 1595 | ALZ | M | + | TSW | 10/00 ▸ 05/05 | 8D0121251P | 732361 | 632 414,5 | ALM |
| 1.6 i | 3B3/0/1/2 ; 3B6/0/1/2 | E | 1595 | ALZ | M | - | TSW | 10/00 ▸ 05/05 | 8D0121251AT | 732361 | 632 414,5 | ALM |
| 1.8 i Turbo 20V | 3B3/0/1/2/3/4 ; 3B6 0/1/2/3/4 | E | 1781 | AWT | M | + | TSW | 10/00 ▸ 05/05 | 8D0121251P | 732361 | 632 414,5 | ALM |
| 1.8 i Turbo 20V | 3B3/0/1/2/3/4 ; 3B6 0/1/2/3/4 | E | 1781 | AWT | M | - | TSW | 10/00 ▸ 05/05 | 8D0121251AT | 732361 | 632 414,5 | ALM |
| 1.8 i Turbo 20V | 3B3/0/1/2/3/4/6 3B6/0/1/2/3/4/6 | E | 1781 | AWM,AWT | A | +/- | TSW | 10/00 ▸ 05/05 | 8D0121251BC | 731755 | 630 412,3 | ALM |
| 1.8 i Turbo 20V | 3B3/0/1/2/3/4 ; 3B6 0/1/2/3 | E | 1781 | AWM,AWT | A | + | TSW | 10/00 ▸ | 8D0121251M | 731755 | 630 412,3 | ALM |
| 1.8 i Turbo 20V | 3B36 ; 3B66 | E | 1781 | AWM | A | + | TSW | 10/00 ▸ | 8D0121251L | 731757 | 630 412 | ALM |
| 1.8 i Turbo 20V | 3B64 | E | 1781 | AWT | A | | TSW | 10/00 ▸ 05/05 | 8D0121251N | 731756 | 632 396 | ALM |
| 1.8 i Turbo 20V | 3B36 ; 3B66 | E | 1781 | AWM | A | | TSW | 05/02 ▸ 05/05 | 8D0121251L | 731757 | 630 412 | ALM |

# VOLKSWAGEN (.../...)

## PASSAT (2000>2005) (.../...)

| | | CC | | AC | | | OE | Valeo | DIM. | TECH |
|---|---|---|---|---|---|---|---|---|---|---|
| 2.0 i,2.0 i 20V | 3B3/0/1/2/3 ; 3B6/0 1/2/3 | E | 1984 | ALT,AZM | M | + | TSW | 10/00 ▸ 05/05 | 8D0121251P | 732361 | 632 414,5 | ALM |
| 2.0 i,2.0 i 20V | 3B3/0/1/2/3 ; 3B6/0 1/2/3 | E | 1984 | ALT,AZM | M | - | TSW | 10/00 ▸ 05/05 | 8D0121251AT | 732361 | 632 414,5 | ALM |
| 2.0 i | 3B6/0/1/2/3 | E | 1984 | AZM | M | | TSW | 10/00 ▸ 05/05 | 8D0121251AT | 732361 | 632 414,5 | ALM |
| 2.0 i | 3B3/0/1/2/3 ; 3B6/0/1/2/3 | E | 1984 | AZM | A | +/- | TSW | 10/00 ▸ 05/05 | 8D0121251BC | 731755 | 630 412,3 | ALM |
| 2.0 i | 3B3/0/1/2/3 ; 3B6/0/1/2/3 | E | 1984 | AZM | A | + | TSW | 10/00 ▸ | 8D0121251M | 731755 | 630 412,3 | ALM |
| 2.0 i 20V | 3B33 ; 3B63 | E | 1984 | ALT | A | | TSW | 11/01 ▸ 04/02 | 8D0121251N | 731756 | 632 396 | ALM |
| 2.3 i V5 | 3B3/1/2/3 ; 3B6/1/2 3 | E | 2324 | AZX | M | +/- | TSW | 01/01 ▸ 05/05 | 8D0121251P | 732361 | 632 414,5 | ALM |
| 2.3 i V5 | 3B3/1/2/3 ; 3B6/1/2 3 | E | 2324 | AZX | A | +/- | TSW | 01/01 ▸ 05/05 | 8D0121251BC | 731755 | 630 412,3 | ALM |
| 2.3 i V5 | 3B3/1/2/3 ; 3B6/1/2 3 | E | 2324 | AZX | A | + | TSW | 01/01 ▸ | 8D0121251M | 731755 | 630 412,3 | ALM |
| 2.8 i V6 | 3B3/1/2/3 ; 3B6/0/1 2/3 | E | 2771 | AMX,ATQ,BBG | M | +/- | TSW | 10/00 ▸ 05/05 | 8D0121251N | 731756 | 632 396 | ALM |
| 2.8 i V6 | 3B33 ; 3B61 | E | 2771 | AMX,ATQ | M | + | TSW | 10/00 ▸ | 8D0121251L | 731757 | 630 412 | ALM |
| 2.8 i V6 | 3B3/1/2/3 ; 3B6/0/3 | E | 2771 | AMX | M | + | TSW | 10/00 ▸ | 8D0121251M | 731755 | 630 412,3 | ALM |
| 2.8 i V6 | 3B3/1/2/3 ; 3B6/0/1 2 | E | 2771 | AMX,ATQ | M | + | TSW | 10/00 ▸ 05/05 | 8D0121251P | 732361 | 632 414,5 | ALM |
| 2.8 i V6 | 3B3/1 ; 3B6/1/2 | E | 2771 | ATQ | M | | TSW | 10/00 ▸ 04/02 | 8D0121251AT | 732361 | 632 414,5 | ALM |
| 2.8 i V6 | 3B3/1/2/3 ; 3B6/0/1 3 | E | 2771 | AMX,BBG | M | | TSW | 10/00 ▸ 05/05 | 8D0121251BC | 731755 | 630 412,3 | ALM |
| 2.8 i V6 | 3B6/2/3 | E | 2771 | AMX | M | | TSW | 10/00 ▸ 05/05 | 8D0121251P | 732361 | 632 414,5 | ALM |
| 2.8 i V6 | 3B3/1/2/3/4/5 ; 3B6 1/2/3/4/5 | E | 2771 | AMX,ATQ,BBG | A | +/- | TSW | 10/00 ▸ 05/05 | 8D0121251BB | 731757 | 630 412 | ALM |
| 2.8 i V6 | 3B3/1/2/3/4/5 ; 3B6 1/2/3/4/5 | E | 2771 | AMX,ATQ,BBG | A | + | TSW | 10/00 ▸ | 8D0121251L | 731757 | 630 412 | ALM |
| 2.8 i V6 | 3B31 | E | 2771 | ATQ | A | + | TSW | 03/01 ▸ | 8D0121251M | 731755 | 630 412,3 | ALM |
| 2.8 i V6 | 3B3/1/2/3/4/5 ; 3B6 1/2/3 | E | 2771 | AMX,ATQ,BBG | A | | TSW | 10/00 ▸ 05/05 | 8D0121251L | 731757 | 630 412 | ALM |
| 2.8 i V6 | 3B3/1 ; 3B6/1/2/3/4 5 | E | 2771 | AMX,ATQ,BBG | A | | TSW | 10/00 ▸ 05/05 | 8D0121251BC | 731755 | 630 412,3 | ALM |
| 2.8 i V6 | 3B3/2/3/4 ; 3B6/1/4 5 | E | 2771 | AMX | A | | TSW | 05/02 ▸ 05/05 | 8D0121251N | 731756 | 632 396 | ALM |
| 4.0 i W8 | 3B37 ; 3B67 | E | 3999 | BDN | M | + | TSW | 10/00 ▸ | 8D0121251L | 731757 | 630 412 | ALM |
| 4.0 i W8 | 3B37 ; 3B67 | E | 3999 | BDN | M | | TSW | 09/01 ▸ 05/05 | 8D0121251L | 731757 | 630 412 | ALM |
| 4.0 i W8 | 3B68 | E | 3999 | BDN | M | | TSW | 05/02 ▸ 05/05 | 8D0121251P | 732361 | 632 414,5 | ALM |
| 4.0 i W8 | 3B38 | E | 3999 | BDN | M | | TSW | 05/02 ▸ 05/05 | 8D0121251N | 731756 | 632 396 | ALM |
| 4.0 i W8 | 3B68 | E | 3999 | BDP | A | + | TSW | 10/00 ▸ | 8D0121251M | 731755 | 630 412,3 | ALM |
| 4.0 i W8 | 3B6/7/8 | E | 3999 | BDN,BDP | A | + | TSW | 10/00 ▸ | 8D0121251L | 731757 | 630 412 | ALM |
| 4.0 i W8 | 3B3/7/8 ; 3B6/7/8 | E | 3999 | BDN,BDP | A | | TSW | 09/01 ▸ 05/05 | 8D0121251N | 731756 | 632 396 | ALM |
| 4.0 i W8 | 3B6/7/8 | E | 3999 | BDN,BDP | A | | TSW | 11/01 ▸ 05/05 | 8D0121251L | 731757 | 630 412 | ALM |
| 4.0 i W8 | 3B68 | E | 3999 | BDP | A | | TSW | 05/02 ▸ 05/05 | 8D0121251BC | 731755 | 630 412,3 | ALM |
| 1.9 TDi | 3B62 | D | 1896 | AWX | M | +/- | TSW | 10/00 ▸ 05/05 | 8D0121251N | 731756 | 632 396 | ALM |
| 1.9 TDi | 3B3/0/1/2/3 ; 3B6/0 1/2/3 | D | 1896 | AVB,AVF,AWX | M | + | TSW | 10/00 ▸ 05/05 | 8D0121251P | 732361 | 632 414,5 | ALM |
| 1.9 TDi | 3B3/0/1/2/3 ; 3B6/0 1/2/3 | D | 1896 | AVB,AVF,AWX | M | - | TSW | 10/00 ▸ 05/05 | 8D0121251AT | 732361 | 632 414,5 | ALM |
| 1.9 TDi | 3B3/0/1/2/3 ; 3B6/0 1/2/3 | D | 1896 | AVB,AVF | A | +/- | TSW | 10/00 ▸ 05/05 | 8D0121251BC | 731755 | 630 412,3 | ALM |
| 1.9 TDi | 3B3/0/1/2/3 ; 3B6/0 1/2/3 | D | 1896 | AVB,AVF | A | + | TSW | 10/00 ▸ | 8D0121251M | 731755 | 630 412,3 | ALM |
| 2.0 TDi | 3B3/0/1/2/3 ; 3B6/0 1/2/3 | D | 1968 | BGW | M | + | TSW | 11/03 ▸ 05/05 | 8D0121251P | 732361 | 632 414,5 | ALM |
| 2.0 TDi | 3B3/0/1/2/3 ; 3B6/0 1/2/3 | D | 1968 | BGW | M | - | TSW | 11/03 ▸ 05/05 | 8D0121251AT | 732361 | 632 414,5 | ALM |
| 2.5 TDi,2.5 TDi V6 | 3B3/1/2/3 ; 3B6/1/2 3 | D | 2496 | AKN,BDG,BDH | M | +/- | TSW | 10/00 ▸ 05/05 | 8D0121251N | 731756 | 632 396 | ALM |
| 2.5 TDi | 3B3/2/3 ; 3B6/2/3 | D | 2496 | BDH | M | +/- | TSW | 01/03 ▸ 05/05 | 8D0121251BB | 731757 | 630 412 | ALM |
| 2.5 TDi,2.5 TDi V6 | 3B3/1/2/3 ; 3B6/1/2 3 | D | 2496 | AKN,BDH | M | + | TSW | 10/00 ▸ | 8D0121251L | 731757 | 630 412 | ALM |
| 2.5 TDi,2.5 TDi V6 | 3B3/3 ; 3B6/1/2/3 | D | 2496 | AKN,BDH | M | + | TSW | 10/00 ▸ | 8D0121251M | 731755 | 630 412,3 | ALM |
| 2.5 TDi,2.5 TDi V6 | 3B6/1/2/3 | D | 2496 | AKN,BDH | M | + | TSW | 10/00 ▸ 05/05 | 8D0121251P | 732361 | 632 414,5 | ALM |
| 2.5 TDi,2.5 TDi V6 | 3B3/3 ; 3B6/1/2/3 | D | 2496 | AKN,BDH | M | | TSW | 10/00 ▸ 05/05 | 8D0121251BC | 731755 | 630 412,3 | ALM |
| 2.5 TDi,2.5 TDi V6 | 3B61 ; 3B3/2/3 | D | 2496 | AKN,BDH | M | | TSW | 10/00 ▸ 05/05 | 8D0121251L | 731757 | 630 412 | ALM |
| 2.5 TDi | 3B31 | D | 2496 | BDH | M | | TSW | 01/03 ▸ 05/05 | 8D0121251P | 732361 | 632 414,5 | ALM |
| 2.5 TDi,2.5 TDi V6 | 3B3/1/2/3 ; 3B6/1/2 3 | D | 2496 | AKN,BAU,BDG | A | +/- | TSW | 10/00 ▸ 05/05 | 8D0121251BB | 731757 | 630 412 | ALM |
| 2.5 TDi | 3B32 ; 3B61 | D | 2496 | BAU | A | +/- | TSW | 01/03 ▸ 05/05 | 8D0121251BC | 731755 | 630 412,3 | ALM |

Radiator Radiateur Motorkühler Radiatore di raffreddamento Radiator Radyatör Радиатор Radiador vízhűtő Vodní chladič Radiator Ψυγείο



• **New** Nouveau **Nuevo** Novo **Nuovo** Nieuw **Neu** Nowość **Yeni** Новый Νέο **Nový**

# VOLKSWAGEN (.../...)

| | Type Ctr. | | CC | | AC | | | OE | Valeo | DIM. | TECH |
|---|---|---|---|---|---|---|---|---|---|---|---|
| **PASSAT (2000>2005) (.../...)** | | | | | | | | | | | |
| 2.5 TDi,2.5 TDi V6 | 3B3/1/2/3 ; 3B6/1/2/3 | D | 2496 | AKN,BAU | A | + | TSW | 10/00 ▸ | 8D0121251L | **731757** | 630 412 ALM |
| 2.5 TDi | 3B32 ; 3B61 | D | 2496 | BAU | A | + | TSW | 10/00 ▸ | 8D0121251M | **731755** | 630 412,3 ALM |
| 2.5 TDi,2.5 TDi V6 | 3B3/1/3 ; 3B6/1/2/3 | D | 2496 | AKN,BAU | A | | TSW | 10/00 ▸ 05/05 | 8D0121251L | **731757** | 630 412 ALM |
| 2.5 TDi,2.5 TDi V6 | 3B6/1/2/3 | D | 2496 | AKN,BAU | A | | TSW | 10/00 ▸ 05/05 | 8D0121251BC | **731755** | 630 412,3 ALM |
| 2.5 TDi V6 | 3B3/1/2/3 ; 3B6/1/2/3 | D | 2496 | BDG | A | | TSW | 05/03 ▸ 05/05 | 8D0121251N | **731756** | 632 396 ALM |
| **PASSAT (2005>2010)** | | | | | | | | | | | |
| 1.4 FSi 16V,1.4 TFSi 16V | 3C2/0/1/2/3 ; 3C5/0/1/2/3 | E | 1390 | CAXA | M | +/- | TSW | 05/07 ▸ | 1K0121253BB | **732872** | 650 414,5 ALM |
| 1.4 FSi 16V,1.4 TFSi 16V | 3C2/0/1/2/3 ; 3C5/0/1/2/3 | E | 1390 | CAXA | M | +/- | TSW | 05/07 ▸ 11/10 | 1K0121253AA | **732872** | 650 414,5 ALM |
| 1.4 FSi 16V,1.4 TFSi 16V | 3C2/0/1/2/3 ; 3C5/0/1/2/3 | E | 1390 | CAXA | M | | TSW | 05/07 ▸ 11/10 | 1K0121253AP | **732872** | 650 414,5 ALM |
| 1.6 i | 3C2/0/1/2 ; 3C5/0/1/2 | E | 1595 | BSE,BSF | M | +/- | TSW | 05/05 ▸ 11/10 | 1K0121253F | **734335** | 640 414,5 ALM |
| 1.6 i | 3C2/0/1/2 ; 3C5/0/1/2 | E | 1595 | BSE,BSF | M | +/- | TSW | 05/05 ▸ 11/10 | 1K0121253P | **734332** | 640 414,5 ALM |
| 1.6 FSi 16V | 3C2/0/1/2/3 ; 3C5/0/1/2/3 | E | 1598 | BLF | M | +/- | TSW | 03/05 ▸ 06/08 | 1K0121253F | **734335** | 640 414,5 ALM |
| 1.6 FSi 16V | 3C2/0/1/2/3 ; 3C5/0/1/2/3 | E | 1598 | BLF | M | +/- | TSW | 03/05 ▸ 06/08 | 1K0121253P | **734332** | 640 414,5 ALM |
| 1.6 FSi 16V | 3C2/0/1/2/3 ; 3C5/0/1/2/3 | E | 1598 | BLF | A | +/- | TSW | 03/05 ▸ 06/08 | 1K0121253F | **734335** | 640 414,5 ALM |
| 1.6 FSi 16V | 3C2/0/1/2/3 ; 3C5/0/1/2/3 | E | 1598 | BLF | A | +/- | TSW | 03/05 ▸ 06/08 | 1K0121253P | **734332** | 640 414,5 ALM |
| 2.0 FSi 16V | 3C2/0/1/2/3 ; 3C5/0/1/2/3 | E | 1984 | BLR,BLX,BLY,BVX,BVY,BVZ | M | +/- | | 03/05 ▸ | 1K0121253AC | **735121** | 650 414,5 ALM |
| 2.0 TFSi 16V | 3C2/1/2/3 ; 3C5/1/2/3 | E | 1984 | AXX,BWA | M | +/- | Air Seal | 07/05 ▸ 12/07 | 1K0121251DM | **734333** | 650 454,3 ALB |
| 2.0 FSi 16V | 3C2/0/1/2/3 ; 3C5/0/1/2/3 | E | 1984 | BLR,BLY,BVX,BVY,BVZ | M | | | 03/05 ▸ 11/10 | 1K0121253AC | **735121** | 650 414,5 ALM |
| 2.0 FSi 16V | 3C2/0/1/2/3 ; 3C5/0/1/2/3 | E | 1984 | BLR,BLY,BVY,BVZ | A | +/- | | 03/05 ▸ | 1K0121253AC | **735121** | 650 414,5 ALM |
| 2.0 TFSi 16V | 3C2/1/2/3 ; 3C5/1/2/3 | E | 1984 | AXX,BWA | A | +/- | Air Seal | 03/05 ▸ 12/07 | 1K0121251DM | **734333** | 650 454,3 ALB |
| 2.0 FSi 16V | 3C2/0/1/2/3 ; 3C5/0/1/2/3 | E | 1984 | BLR,BLY,BVY,BVZ | A | | | 03/05 ▸ | 1K0121253AC | **735121** | 650 414,5 ALM |
| 1.9 TDi | 3C2/0/1/2/3 | D | 1896 | BKC | M | +/- | TSW | 03/05 ▸ | 1K0121253H | **732872** | 650 414,5 ALM |
| 1.9 TDi | 3C2/0/1/2/3 ; 3C5/0/1/2/3 | D | 1896 | BKC,BXE | M | +/- | TSW | 03/05 ▸ 11/08 | 1K0121253AA | **732872** | 650 414,5 ALM |
| 2.0 TDi 16V | 3C2/0/1/2/3 ; 3C5/0/1/2/3 ; 3G2/0/1 | D | 1968 | BKP,BMA,BMR,BUZ,BVE,BWV,CBAA/F CBAB/F,CBAC/F,CBBB/F,CBDC/F | M | +/- | Air Seal | 03/05 ▸ 11/10 | 1K0121251DM | **734333** | 650 454,3 ALB |
| 2.0 TDi 16V | 3C2/0/1/2/3 ; 3C5/0/1/2/3 ; 3G2/0/1 | D | 1968 | BKP,BMA,BVE,BWV,CBAA/F,CBAB/F,CBAC/F,CBBB/F CBDC/F | M | +/- | Air Seal | 03/05 ▸ 11/10 | 3C0121253AL | **734333** | 650 454,3 ALB |
| 2.0 TDi 16V | 3C2/0/1/2/3 ; 3C5/0/1/2/3 | D | 1968 | BKP,BMA,BVE,BWV | M | +/- | Air Seal | 03/05 ▸ | 3C0121253K | **734333** | 650 454,3 ALB |
| 2.0 TDi,2.0 TDi 16V | 3C2/0/1/2/3 ; 3C5/0/1/2/3 | D | 1968 | BMR,BUZ | M | +/- | Air Seal | 10/05 ▸ | 3C0121253Q | **734333** | 650 454,3 ALB |
| 2.0 TDi 16V | 3C2/0/1/2/3 ; 3C5/0/1/2/3 | D | 1968 | BKP,BMA,BVE,BWV | M | | Air Seal | 03/05 ▸ | 3C0121253K | **734333** | 650 454,3 ALB |
| 2.0 TDi 16V | 3C2/2 ; 3C5/0/1/3 | D | 1968 | BMA,CBBB/F | M | | Air Seal | 08/05 ▸ 11/10 | 1K0121251DM | **734333** | 650 454,3 ALB |
| 2.0 TDi 16V | 3C2/0/1/2/3 ; 3C5/0/1/2/3 | D | 1968 | BKP,BMA,BVE,BWV | A | +/- | Air Seal | 03/05 ▸ | 3C0121253K | **734333** | 650 454,3 ALB |
| 2.0 TDi 16V | 3C2/0/1/2/3 ; 3C5/0/1/2/3 | D | 1968 | BKP,BMA,BMR,BUZ,BVE,BWV,CBAA/F CBAB/F,CBAC/F,CBBB/F | A | +/- | Air Seal | 03/05 ▸ 11/10 | 1K0121251DM | **734333** | 650 454,3 ALB |
| 2.0 TDi 16V | 3C2/0/1/2/3 ; 3C5/0/1/2/3 | D | 1968 | BKP,BMA,BVE,BWV,CBAA/F,CBAB/F,CBAC/F,CBBB/F | A | +/- | Air Seal | 03/05 ▸ 11/10 | 3C0121253AL | **734333** | 650 454,3 ALB |
| 2.0 TDi 16V | 3C2/0/1/2/3 ; 3C5/0/1/2/3 | D | 1968 | BMR,BUZ | A | +/- | Air Seal | 11/05 ▸ 06/08 | 3C0121253Q | **734333** | 650 454,3 ALB |
| 2.0 TDi 16V | 3C2/0/1/2/3 ; 3C5/0/1/2/3 | D | 1968 | BKP,BMA,BVE,BWV | A | | Air Seal | 03/05 ▸ | 3C0121253K | **734333** | 650 454,3 ALB |
| 2.0 TDi 16V | 3G21 ; 3C5/0/1/3 | D | 1968 | BMA,CBAC/F,CBBB/F | A | | Air Seal | 08/05 ▸ 11/10 | 3C0121253AL | **734333** | 650 454,3 ALB |
| **PASSAT CC** | | | | | | | | | | | |
| 2.0 TDI,2.0 TDI 16V | 3572 | D | 1968 | CBAA/F,CBAB/F,CBBB/F | M | +/- | Air Seal | 05/08 ▸ 11/10 | 1K0121251DM | **734333** | 650 454,3 ALB |
| 2.0 TDI | 3572 | D | 1968 | CBAB/F,CBAC/F | M | | Air Seal | 05/08 ▸ 11/10 | 3C0121253AL | **734333** | 650 454,3 ALB |
| 2.0 TDI,2.0 TDI 16V | 3572 | D | 1968 | CBAA/F,CBAB/F,CBBB/F | A | +/- | Air Seal | 05/08 ▸ 11/10 | 3C0121253AL | **734333** | 650 454,3 ALB |
| 2.0 TDI,2.0 TDI 16V | 3572 | D | 1968 | CBAB/F,CBAC/F,CBBB/F | A | | Air Seal | 05/08 ▸ 05/10 | 1K0121251DM | **734333** | 650 454,3 ALB |
| **POLO (74>81)** | | | | | | | | | | | |
| 0.8 | 8610 | E | 800 | HE | M | - | | 01/76 ▸ 07/78 | 861121253C | | 430 322 ALM |

# VOLKSWAGEN (.../...)

## POLO (74>81) (.../...)

| Type Ctr. | | CC | | AC | | 2+3 | OE | Valeo | DIM. | TECH |
|---|---|---|---|---|---|---|---|---|---|---|
| 0.8 8610 | E | 800 | HE | M | - | | 01/76 ▸ 07/78 | 171121253AD | | 380 322 | ALM |
| 8662323943 ▸ | | | | | | | | | | |
| 0.8 861/0/1/2 | E | 800 | HE | M | | | 01/76 ▸ 07/78 | 171121253AD | | 380 322 | ALM |
| 0.8 861/1/2 | E | 800 | HE | M | | | 01/76 ▸ 07/78 | 861121253C | | 430 322 | ALM |
| 0.9 8610 | E | 895 | HA | M | - | | 04/75 ▸ 09/81 | 171121253AD | | 380 322 | ALM |
| 8662323943 ▸ | | | | | | | | | | |
| 0.9 861/0/1/2 ; 862/0/1 | E | 895 | HA | M | | | 04/75 ▸ 09/81 | 171121253AD | | 380 322 | ALM |
| F 866 2323 943, 865 2323 943 ▸ | | | | | | | | | | |
| 0.9 861/0/1/2 ; 862/0/1 | E | 895 | HA | M | | | 08/75 ▸ 09/81 | 861121253C | | 430 322 | ALM |
| 865 2323 943 ▸ | | | | | | | | | | |
| 1.1 | E | 1093 | HB,HC,HD | M | - | | 04/75 ▸ 07/81 | 171121253AD | | 380 322 | ALM |
| 8651565500, 8651568130 ▸ | | | | | | | | | | |
| 1.1 8610 | E | 1093 | HB,HD | M | - | | 04/75 ▸ 07/81 | 861121253C | | 430 322 | ALM |
| 865 2565 500, 8651565500 ▸ | | | | | | | | | | |
| 1.1 861/0/1/2 ; 862/0/1/2 | E | 1093 | HB,HC,HD | M | | | 04/75 ▸ 07/81 | 171121253AD | | 380 322 | ALM |
| F865 1568 130, F865 1565 500 ▸ | | | | | | | | | | |
| 1.1 861/0/1/2 ; 862/0/1/2 | E | 1093 | HB,HC | M | | | 08/75 ▸ 07/81 | 861121253C | | 430 322 | ALM |
| 865 1568 129, 865 2565 500 ▸ | | | | | | | | | | |
| 1.3 8610 | E | 1272 | HH,HJ | M | - | | 01/77 ▸ 09/81 | 861121253C | | 430 322 | ALM |
| 1.3 8610 | E | 1272 | HH,HJ | M | - | | 01/77 ▸ 07/81 | 171121253AD | | 380 322 | ALM |
| 8662323943 ▸ | | | | | | | | | | |
| 1.3 861/1/2 ; 862/0/1/2 | E | 1272 | HH,HJ | M | | | 01/77 ▸ 09/81 | 861121253C | | 430 322 | ALM |
| 1.3 861/0/1/2 ; 862/0/1/2 | E | 1272 | HH,HJ | M | | | 01/77 ▸ 09/81 | 171121253AD | | 380 322 | ALM |

## POLO (81>86)

| | | | | | | | | | | | |
|---|---|---|---|---|---|---|---|---|---|---|---|
| 1.05 8670 ; 8710 | E | 1043 | GL,HZ | M | - | TSW | 08/83 ▸ 07/86 | 867121253E | 883818 | 380 322 | ALM |
| E-000 001 ▸ | | | | | | | | | | | |
| 1.05 867/0/1/2/D ; 868/0/D ; 871/0/1/D ; 8740 872/0/1/D | E | 1043 | GL,HZ | M | | TSW | 08/83 ▸ 07/86 | 867121253E | 883818 | 380 322 | ALM |
| 1.05 867/0/1/D ; 868/0/D ; 871/0/1/D ; 872/0/1/D | E | 1043 | HZ | M | | TSW | 08/85 ▸ 07/86 | 171121253CJ | 883819 | 430 322 | ALM |
| 1.05 867/0/1/2 ; 8711 ; 868/0/1/2 ; 873/0/1/2 874/0/1/2 | E | 1043 | GL | M | | | 10/81 ▸ 08/83 | 867121253 | | 380 322 | ALM |
| ▸ D-200 000 | | | | | | | | | | | |
| 1.3 871/3/B | E | 1272 | GK | M | - | TSW | 08/83 ▸ 07/86 | 321121253BM | 883720 | 525 322 | ALM |
| E-000 001 ▸ | | | | | | | | | | | |
| 1.3 867/0/1 | E | 1272 | HK,HW,MH | M | - | TSW | 08/83 ▸ 07/86 | 171121253CJ | 883819 | 430 322 | ALM |
| 1.3 867/0/1 | E | 1272 | MH | M | - | TSW | 08/85 ▸ 07/86 | 867121253E | 883818 | 380 322 | ALM |
| 1.3 867/0/1/2 ; 868/0/1/2 ; 871/0/1/3/D ; 872/0 1/3/D ; 873/0/1 | E | 1272 | HK,MH | M | | TSW | 08/83 ▸ 07/86 | 867121253E | 883818 | 380 322 | ALM |
| 1.3 867/0/1/2 ; 868/0/1/2 ; 871/0/1/3/D ; 872/0 1/3/D ; 873/0/1 | E | 1272 | GT,HK,MH | M | | TSW | 08/83 ▸ 07/86 | 171121253CJ | 883819 | 430 322 | ALM |
| E-000 001, F-E-000 001 ▸ | | | | | | | | | | | |
| 1.3 8713 ; 867/1/2 | E | 1272 | GK | M | | | 09/82 ▸ 08/83 | 321121253H | | 525 322 | ALM |

## POLO (86>90)

| | | | | | | | | | | | |
|---|---|---|---|---|---|---|---|---|---|---|---|
| 1.05 801/0/1/2/5/6 ; 802/1/2 ; 803/1/2/6 | E | 1043 | AAK,GL,HZ | M | - | TSW | 08/86 ▸ 10/90 | 867121253E | 883818 | 380 322 | ALM |
| 1.05 8022 ; 801/0/1/2/5/6 ; 803/1/2/6 | E | 1043 | HZ | M | | TSW | 08/86 ▸ 10/90 | 171121253CJ | 883819 | 430 322 | ALM |
| 1.3 8021 ; 801/1/2/5/6 ; 803/1/2/5/6 | E | 1272 | NZ | M | - | | 08/86 ▸ 10/90 | 867121253G | | 522 310 | CBS |
| 1.3 801/0/1/2/5/6 ; 802/1/2 ; 803/1/2/5/6 | E | 1272 | 2G,GK,MH,NU | M | - | TSW | 08/86 ▸ 10/90 | 867121253E | 883818 | 380 322 | ALM |
| 1.3 801/1/2/5 ; 803/1/2/5 | E | 1272 | GK | M | - | TSW | 08/86 ▸ 10/90 | 321121253BM | 883720 | 525 322 | ALM |
| 1.3 801/0/1/2/5/6 ; 802/1/2 ; 803/1/2/5/6 | E | 1272 | 2G,GT,MH,NU,NZ | M | | TSW | 08/86 ▸ 10/90 | 171121253CJ | 883819 | 430 322 | ALM |
| 1.3 8035 | E | 1272 | PY | M | | | 01/87 ▸ 10/90 | 867121253 | | 380 322 | ALM |
| 1.3 8035 | E | 1272 | PY | M | | TSW | 01/87 ▸ 10/90 | 871121253 | 883818 | 380 322 | ALM |
| 1.3 801/2/5 ; 802/1/2 ; 803/2/5 | E | 1272 | 3F | M | | TSW | 08/89 ▸ 10/90 | 871121251A | 883720 | 525 322 | ALM |
| 1.3 | E | 1272 | NZ | M | - | | 12/86 ▸ 10/90 | 867121253G | | 522 310 | CBS |
| 1.3 | E | 1272 | NZ | M | - | TSW | 12/86 ▸ 10/90 | 171121253CJ | 883819 | 430 322 | ALM |
| 1.3 D 801/1/2/6 ; 802/1/2 ; 803/1/2/5/6 | D | 1272 | MN | M | - | | 08/86 ▸ 10/90 | 867121253G | | 522 310 | CBS |
| 1.3 D | D | 1272 | MN | M | | TSW | 08/86 ▸ 07/87 | 871121253 | 883818 | 380 322 | ALM |
| 1.3 D 801/1/2/6 ; 802/1/2 ; 803/1/2/6 | D | 1272 | MN | M | | | 08/86 ▸ 10/90 | 867121253 | | 380 322 | ALM |

## POLO (90>94)

| | | | | | | | | | | | |
|---|---|---|---|---|---|---|---|---|---|---|---|
| 1.05 801/2/5/6 ; 802/1/2 ; 803/2/6 | E | 1043 | AAU,HZ | M | | TSW | 10/90 ▸ 10/94 | 867121253L | 816703 | 430 322 | ALM |
| 1.3,1.3 i 8022 ; 801/2/5/6 803/2/5/6 | E | 1272 | 3F,PY,PYK | M | - | TSW | 10/90 ▸ 10/94 | 867121253AB | 816703 | 430 322 | ALM |
| 1.3 8022 ; 801/2/5/6 ; 803/2/5/6 | E | 1272 | 2G,AAV,NZ | M | | TSW | 10/90 ▸ 10/94 | 867121253L | 816703 | 430 322 | ALM |
| 1.4 D 8022 ; 801/2/5/6 ; 803/2/6 | D | 1391 | 1W | M | | | 10/90 ▸ 10/94 | 867121251B | | 380 322 | ALM |

## POLO (94>99)

| | | | | | | | | | | | |
|---|---|---|---|---|---|---|---|---|---|---|---|
| 1.0 i 6N10 | E | 999 | AER,ALL | M | + | TSW | 07/96 ▸ 12/99 | 1H0121253CB | 731267 | 628 377,5 | ALM |
| 1.0 i 6N10 | E | 999 | ALL | M | - | TSW | 08/97 ▸ 05/99 | 6N0121253K | 730956 | 430 377,5 | ALM |

Radiator Ψυγείο Vodní chladič vízhűtő Радиатор Radiador Radiator Radyatör Radiator Radiatore di raffreddamento Motorkühler Radiateur Radiator



• **New** Nouveau **Nuevo** Novo **Nuovo** Nieuw **Neu** Nowość **Yeni** Новый Νέο **Nový**

# VOLKSWAGEN (.../...)

## POLO (94>99) (.../...)

| | | | CC | | | AC | | | | Valeo | DIM. | | TECH |
|---|---|---|---|---|---|---|---|---|---|---|---|---|---|
| 1.0 i | 6N10 | E | 999 | AER | M | | TSW | 07/96 ▸ 12/99 | 6N0121253K | 730956 | 430 | 377,5 | ALM |
| 1.0 i | 6N10 | E | 1043 | AEV | M | + | TSW | 10/94 ▸ 06/96 | 1H0121253CB | 731267 | 628 | 377,5 | ALM |
| 1.0 i | 6N10 | E | 1043 | AEV | M | | TSW | 10/94 ▸ 06/96 | 6N0121253K | 730956 | 430 | 377,5 | ALM |
| 1.3 i | 6N10 | E | 1296 | ADX | M | + | TSW | 10/94 ▸ 04/97 | 1H0121253CB | 731267 | 628 | 377,5 | ALM |
| 1.3 i | 6N10 | E | 1296 | ADX | M | - | TSW | 10/94 ▸ 04/97 | 6N0121253K | 730956 | 430 | 377,5 | ALM |
| 1.3 i | 6N10 | E | 1296 | ADX | M | | TSW | 10/94 ▸ 07/95 | 6N0121253K | 730956 | 430 | 377,5 | ALM |
| 1.4 i,1.4 i 16V | 6NAF ; 6V20 ; 6V50 6N1/0 | E | 1390 | AEX,AFH,AKV,ANX,APQ | M | + | TSW | 07/95 ▸ 12/99 | 1H0121253CB | 731267 | 628 | 377,5 | ALM |
| 1.4 i,1.4 i 16V | 6N10 ; 6V20 | E | 1390 | AEX,AFH | M | + | TSW | 07/95 ▸ 12/99 | 1H0121253BE | 730955 | 628 | 377,5 | ALM |
| 1.4 i | 6V50 | E | 1390 | AEX | M | + | TSW | 05/97 ▸ 12/97 | 6K0121253K | 730947 | 525 | 322 | ALM |
| 1.4 i,1.4 i 16V | 6V20 ; 6V50 ; 6N1/0 | E | 1390 | AEX,AFH,AKV,ANX,APQ | M | - | TSW | 07/95 ▸ 12/99 | 6N0121253K | 730956 | 430 | 377,5 | ALM |
| 1.4 i,1.4 i 16V | 6NAF ; 6V20 ; 6V50 6N1/0 | E | 1390 | AEX,AFH | M | | TSW | 07/95 ▸ 12/99 | 6N0121253K | 730956 | 430 | 377,5 | ALM |
| 1.4 i | 6V50 | E | 1390 | AEX | M | | TSW | 05/97 ▸ 12/97 | 6K0121253AA | 731267 | 628 | 377,5 | ALM |
| 1.4 i | 6V50 | E | 1390 | AEX | M | | TSW | 05/97 ▸ 12/97 | 6K0121253K | 730947 | 525 | 322 | ALM |
| 1.4 i | 6N10 | E | 1390 | AEX,AKV,ANX,APQ | A | +/- | TSW | 10/95 ▸ 12/99 | 1H0121253CB | 731267 | 628 | 377,5 | ALM |
| 1.4 i | 6N10 | E | 1390 | AEX,ANX,APQ | A | - | TSW | 10/95 ▸ 12/99 | 6N0121253K | 730956 | 430 | 377,5 | ALM |
| 1.4 i | 6N10 | E | 1390 | AEX | A | | TSW | 10/95 ▸ 12/97 | 1H0121253BE | 730955 | 628 | 377,5 | ALM |
| 1.6 i | 6V20 | E | 1595 | 1F | M | + | TSW | 05/96 ▸ 09/97 | 6K0121253AA | 731267 | 628 | 377,5 | ALM |
| 1.6 i | 6V20 | E | 1595 | 1F | M | + | TSW | 05/96 ▸ 09/97 | 1H0121253P | 731265 | 628 | 377,5 | ALM |
| 1.6 i | 6V20 | E | 1595 | 1F | M | + | TSW | 05/96 ▸ 09/97 | 1H0121253BE | 730955 | 628 | 377,5 | ALM |
| 1.6 i | 6V20 | E | 1595 | 1F | M | | TSW | 05/96 ▸ 09/97 | 6K0121253S | 730948 | 525 | 322 | ALM |
| 1.6 i<br>V 191 853 ▸ | 6V20 ; 6V50 | E | 1598 | AFT | M | + | TSW | > ▸ 09/99 | 6K0121253AA | 731267 | 628 | 377,5 | ALM |
| 1.6 i | 6N10 ; 6V20 | E | 1598 | AEA,AEE,AFT | M | + | TSW | 10/94 ▸ 09/99 | 1H0121253BE | 730955 | 628 | 377,5 | ALM |
| 1.6 i,1.6 i 16V | 6V20 ; 6V50 ; 6N1/0 | E | 1598 | AEA,AEE,AFT,AJV | M | + | TSW | 10/94 ▸ 12/99 | 1H0121253CB | 731267 | 628 | 377,5 | ALM |
| 1.6 i | 6V20 ; 6V50 | E | 1598 | AFT | M | + | TSW | 05/96 ▸ 09/99 | 6K0121253S | 730948 | 525 | 322 | ALM |
| 1.6 i | 6V20 ; 6V50 | E | 1598 | AFT | M | + | TSW | 05/96 ▸ 09/99 | 1H0121253P | 731265 | 628 | 377,5 | ALM |
| 1.6 i | 6V20 ; 6V50 ; 6N1/0 | E | 1598 | AEA,AEE,ALM | M | - | TSW | 10/94 ▸ 08/99 | 6N0121253K | 730956 | 430 | 377,5 | ALM |
| 1.6 i | 6N10 ; 6V20 | E | 1598 | AEA,AEE,AFT | M | | TSW | 10/94 ▸ 09/99 | 6N0121253K | 730956 | 430 | 377,5 | ALM |
| 1.6 i | 6V20 ; 6V50 | E | 1598 | ALM | M | | TSW | 07/98 ▸ 08/99 | 6K0121253AA | 731267 | 628 | 377,5 | ALM |
| 1.6 i | 6N10 | E | 1598 | AEE,AHS | A | +/- | TSW | 07/95 ▸ 12/99 | 1H0121253CB | 731267 | 628 | 377,5 | ALM |
| 1.6 i<br>V 191 853 ▸ | 6V20 ; 6V50 | E | 1598 | AFT | A | + | TSW | > ▸ 08/99 | 6K0121253AA | 731267 | 628 | 377,5 | ALM |
| 1.6 i | 6V20 ; 6V50 | E | 1598 | AFT | A | + | TSW | 03/98 ▸ 08/99 | 6K0121253S | 730948 | 525 | 322 | ALM |
| 1.6 i | 6N10 | E | 1598 | AEE | A | - | TSW | 07/95 ▸ 12/99 | 6N0121253K | 730956 | 430 | 377,5 | ALM |
| 1.6 i | 6N10 | E | 1598 | AEE,AHS | A | | TSW | 09/95 ▸ 12/99 | 1H0121253BE | 730955 | 628 | 377,5 | ALM |
| 1.6 i<br>▸ 6K-X-523 700 | 6V20 ; 6V50 | E | 1598 | ALM | M | | TSW | 07/98 ▸ 08/98 | 6K0121253K | 730947 | 525 | 322 | ALM |
| 1.6 i<br>▸ V 191 852 | 6V20 ; 6V50 | E | 1598 | AFT | M | + | TSW | 05/96 ▸ | 6K0121253K | 730947 | 525 | 322 | ALM |
| 1.6 i<br>▸ V 191 852 | 6V20 ; 6V50 | E | 1598 | AFT | M | | TSW | 05/96 ▸ | 6K0121253A | 730945 | 628 | 322 | ALM |
| 1.6 i<br>▸ V 191 852 | 6V20 ; 6V50 | E | 1598 | AFT | A | + | TSW | 03/98 ▸ | 6K0121253K | 730947 | 525 | 322 | ALM |
| 1.6 i<br>▸ V 191 852 | 6V20 ; 6V50 | E | 1598 | AFT | A | | TSW | 03/98 ▸ | 6K0121253A | 730945 | 628 | 322 | ALM |
| 1.8 i | 6V20 | E | 1781 | ADD | M | + | TSW | 03/98 ▸ 08/99 | 1H0121253P | 731265 | 628 | 377,5 | ALM |
| 1.8 i | 6V20 | E | 1781 | ADD | M | + | TSW | 03/98 ▸ 08/99 | 6K0121253AA | 731267 | 628 | 377,5 | ALM |
| 1.8 i | 6V20 | E | 1781 | ADD | M | - | TSW | 03/98 ▸ 08/99 | 6K0121253S | 730948 | 525 | 322 | ALM |
| 2.0 i | 6V20 | E | 1984 | ADC | M | +/- | TSW | 08/99 ▸ 08/99 | 6K0121253AC | 731728 | 628 | 322 | ALM |
| 2.0 i | 6V20 | E | 1984 | ADC | M | + | TSW | 08/99 ▸ 08/99 | 1HM121253D | 731268 | 628 | 377,5 | ALM |
| 2.0 i | 6V20 | E | 1984 | ADC | A | +/- | TSW | 08/99 ▸ 08/99 | 6K0121253AC | 731728 | 628 | 322 | ALM |
| 2.0 i | 6V20 | E | 1984 | ADC | A | + | TSW | 08/99 ▸ 08/99 | 1HM121253D | 731268 | 628 | 377,5 | ALM |
| 1.7 SDI | 6N10 | D | 1716 | AHG,AKU | M | + | TSW | 04/97 ▸ 12/99 | 1H0121253CB | 731267 | 628 | 377,5 | ALM |
| 1.7 SDi | 6V20 ; 6V50 | D | 1716 | AKW | M | + | TSW | 11/97 ▸ 08/99 | 6K0121253AA | 731267 | 628 | 377,5 | ALM |
| 1.7 SDI | 6N10 | D | 1716 | AHG,AKU | M | - | TSW | 04/97 ▸ 12/99 | 6N0121253K | 730956 | 430 | 377,5 | ALM |
| 1.7 SDi | 6V20 ; 6V50 | D | 1716 | AKW | M | - | TSW | 11/97 ▸ 08/99 | 6K0121253J | 730946 | 430 | 322 | ALM |
| 1.9 D | 6N10 | D | 1896 | AEF | M | +/- | TSW | 04/98 ▸ 05/99 | 6N0121253L | 730954 | 508 | 377,5 | ALM |
| 1.9 SDI | 6N10 | D | 1896 | AGD | M | +/- | TSW | 04/98 ▸ 12/99 | 6N0121253K | 730956 | 430 | 377,5 | ALM |
| 1.9 SDi | 6V20 | D | 1896 | 1Y | M | + | TSW | 05/96 ▸ 10/96 | 1H0121253P | 731265 | 628 | 377,5 | ALM |
| 1.9 SDi | 6V20 ; 6V50 | D | 1896 | AEY | M | + | TSW | 05/96 ▸ 09/99 | 6K0121253A | 730945 | 628 | 322 | ALM |
| 1.9 SDi,1.9 TDi | 6V20 | D | 1896 | 1Y,AEY,AHU | M | + | TSW | 05/96 ▸ 09/99 | 1H0121253BE | 730955 | 628 | 377,5 | ALM |
| 1.9 SDi,1.9 TDi | 6V20 | D | 1896 | 1Y,AEY,AHU | M | + | TSW | 05/96 ▸ 09/99 | 1H0121253CB | 731267 | 628 | 377,5 | ALM |
| 1.9 SDi,1.9 TDi | 6V20 ; 6V50 | D | 1896 | AEY,AFN,AHU,ALE | M | + | TSW | 01/97 ▸ 09/99 | 6K0121253AA | 731267 | 628 | 377,5 | ALM |
| 1.9 TDi | 6V20 ; 6V50 | D | 1896 | ALE | M | - | TSW | 11/97 ▸ 08/99 | 6K0121253AC | 731728 | 628 | 322 | ALM |
| 1.9 TDi | 6V20 ; 6V50 | D | 1896 | AFN | M | - | TSW | 06/98 ▸ 08/99 | 6N0121253K | 730956 | 430 | 377,5 | ALM |
| 1.9 D,1.9 SDI | 6N10 | D | 1896 | AEF,AGD | M | | TSW | 01/95 ▸ 12/99 | 6N0121253L | 730954 | 508 | 377,5 | ALM |
| 1.9 SDi,1.9 TDi | 6V20 | D | 1896 | AEY,AHU | M | | TSW | 05/96 ▸ 09/99 | 6N0121253K | 730956 | 430 | 377,5 | ALM |
| 1.9 SDi | 6V20 | D | 1896 | 1Y | M | | TSW | 05/96 ▸ 10/96 | 6K0121253G | 731266 | 628 | 322 | ALM |

# VOLKSWAGEN (.../...)

## POLO (94>99) (.../...)

| | | | CC | | | AC | | | OE | Valeo | DIM. | | TECH |
|---|---|---|---|---|---|---|---|---|---|---|---|---|---|
| 1.9 SDi | 6V20 ; 6V50 | D | 1896 | AEY | M | | TSW | 05/96 ▸ 09/99 | 6K0121253J | 730946 | 430 | 322 | ALM |
| 1.9 SDi | 6V20 | D | 1896 | 1Y | M | | TSW | 05/96 ▸ 10/96 | 6K0121253AA | 731267 | 628 | 377,5 | ALM |
| 1.9 TDi | 6V20 ; 6V50 | D | 1896 | AHU | M | | TSW | 01/97 ▸ 09/99 | 6K0121253AC | 731728 | 628 | 322 | ALM |
| 1.9 SDi | 6V50 | D | 1896 | AEY | M | | TSW | 06/97 ▸ 08/99 | 6K0121253C | 730946 | 430 | 322 | ALM |

## POLO (99>2001)

| | | | | | | | | | | | | | |
|---|---|---|---|---|---|---|---|---|---|---|---|---|---|
| 1.0 i | 6N2/0/1/2/3 | E | 999 | ALD,AUC | M | + | TSW | 10/99 ▸ 09/01 | 1H0121253L | 731267 | 628 | 377,5 | ALM |
| 1.0 i | 6N20 | E | 999 | ALD,AUC | M | + | TSW | 10/99 ▸ | 1H0121253BE | 730955 | 628 | 377,5 | ALM |
| 1.0 i | 6N20 | E | 999 | ALD,AUC | M | - | TSW | 10/99 ▸ 09/01 | 6N0121253K | 730956 | 430 | 377,5 | ALM |
| 1.0 i | 6N2/0/1/2/3 | E | 999 | ALD,AUC | M | | TSW | 01/00 ▸ 09/01 | 6N0121253K | 730956 | 430 | 377,5 | ALM |
| 1.4 i,1.4 i 16V | 6V20 ; 6V50 | E | 1390 | AKK,ANW,APE,AUD | M | +/- | TSW | 10/99 ▸ 09/01 | 6K0121253AS | 732710 | 628 | 377,5 | ALM |
| 1.4 i,1.4 i 16V | 6N20 | E | 1390 | AFK,AHW,AKK,AKP,AUA,AUB,AUD | M | + | TSW | 10/99 ▸ | 1H0121253BE | 730955 | 628 | 377,5 | ALM |
| 1.4 i,1.4 i 16V | 6N2/0/1/2/3/6 | E | 1390 | AFK,AHW,AKK,AKP,AUA,AUB,AUD | M | + | TSW | 10/99 ▸ 09/01 | 1H0121253L | 731267 | 628 | 377,5 | ALM |
| 1.4 i,1.4 i 16V | 6V20 ; 6V50 ; 6N2/0/1/2/3/6 | E | 1390 | AFK,AHW,AKK,AKP,APE,AUA,AUB AUD | M | + | TSW | 10/99 ▸ 09/01 | 1H0121253CB | 731267 | 628 | 377,5 | ALM |
| 1.4 i,1.4 i 16V | 6V20 ; 6V50 ; 6N2/0 | E | 1390 | AFK,AHW,AKK,AKP,APE,AUA,AUB AUD | M | - | TSW | 10/99 ▸ 09/01 | 6N0121253K | 730956 | 430 | 377,5 | ALM |
| 1.4 i 16V | 6V20 | E | 1390 | AUA | M | - | TSW | 06/00 ▸ 09/01 | 6K0121253AS | 732710 | 628 | 377,5 | ALM |
| 1.4 i,1.4 i 16V | 6N2/0/1/2/3/6 | E | 1390 | AFK,AHW,AKK,AKP,AUA,AUB,AUD | M | | TSW | 05/00 ▸ 09/01 | 6N0121253K | 730956 | 430 | 377,5 | ALM |
| 1.4 i 16V | 6V50 | E | 1390 | AUA | M | | TSW | 06/00 ▸ 09/01 | 6K0121253AS | 732710 | 628 | 377,5 | ALM |
| 1.4 i,1.4 i 16V | 6N2/0/1/2/3 | E | 1390 | AHW,AKK,AUA,AUD | A | +/- | TSW | 10/99 ▸ 09/01 | 1H0121253CB | 731267 | 628 | 377,5 | ALM |
| 1.4 i,1.4 i 16V | 6N20 | E | 1390 | AHW,AKK,AUA,AUD | A | +/- | TSW | 10/99 ▸ | 1H0121253BE | 730955 | 628 | 377,5 | ALM |
| 1.4 i | 6N20 | E | 1390 | AKK | A | + | TSW | 10/99 ▸ | 1H0121253BE | 730955 | 628 | 377,5 | ALM |
| 1.4 i,1.4 i 16V | 6N20 | E | 1390 | AHW,AKK,AUA,AUD | A | - | TSW | 10/99 ▸ 09/01 | 6N0121253K | 730956 | 430 | 377,5 | ALM |
| 1.6 i | 6V20 ; 6V50 | E | 1595 | AKL | M | +/- | TSW | 10/99 ▸ 09/01 | 6K0121253AS | 732710 | 628 | 377,5 | ALM |
| 1.6 i | 6V20 ; 6V50 | E | 1595 | AKL | M | + | TSW | 10/99 ▸ 09/01 | 6K0121253AA | 731267 | 628 | 377,5 | ALM |
| 1.6 i | 6V20 ; 6V50 | E | 1595 | AKL | M | + | TSW | 10/99 ▸ 09/01 | 1HM121253D | 731268 | 628 | 377,5 | ALM |
| 1.6 i | 6V20 | E | 1595 | APF | M | - | TSW | 03/00 ▸ 10/00 | 6K0121253AS | 732710 | 628 | 377,5 | ALM |
| 1.6 i | 6V50 | E | 1595 | APF | M | | TSW | 03/00 ▸ 10/00 | 6K0121253AS | 732710 | 628 | 377,5 | ALM |
| 1.6 i | 6V20 ; 6V50 | E | 1595 | AEH | A | + | TSW | 10/99 ▸ 09/01 | 6K0121253AA | 731267 | 628 | 377,5 | ALM |
| 1.6 i | 6V20 ; 6V50 | E | 1595 | AEH | A | + | TSW | 10/99 ▸ 09/01 | 1HM121253D | 731268 | 628 | 377,5 | ALM |
| 1.6 i | 6V20 ; 6V50 | E | 1595 | AEH | A | - | TSW | 10/99 ▸ 09/01 | 6K0121253AS | 732710 | 628 | 377,5 | ALM |
| 1.6 i,1.6 i 16V | 6V20 ; 6V50 | E | 1598 | ALM,AUR | M | +/- | TSW | 10/99 ▸ 09/01 | 6K0121253AS | 732710 | 628 | 377,5 | ALM |
| 1.6 i 16V | 6N20 | E | 1598 | ARC | M | +/- | TSW | 11/99 ▸ | 1H0121253BE | 730955 | 628 | 377,5 | ALM |
| 1.6 i 16V | 6N2/0/6 | E | 1598 | ARC,AVY | M | + | TSW | 11/99 ▸ 09/01 | 1H0121253CB | 731267 | 628 | 377,5 | ALM |
| 1.6 i 16V | 6V20 ; 6V50 | E | 1598 | AUR | M | + | TSW | 07/00 ▸ 09/01 | 6K0121253AA | 731267 | 628 | 377,5 | ALM |
| 1.6 i 16V | 6N2/0/6 | E | 1598 | ARC,AVY | M | | TSW | 11/99 ▸ 09/01 | 1H0121253L | 731267 | 628 | 377,5 | ALM |
| 1.8 i | 6V20 | E | 1781 | ADD | M | + | TSW | 03/00 ▸ 09/01 | 6K0121253AA | 731267 | 628 | 377,5 | ALM |
| 1.8 i | 6V20 | E | 1781 | ADD | M | - | TSW | 03/00 ▸ 09/01 | 6K0121253S | 730948 | 525 | 322 | ALM |
| 2.0 i | 6V20 | E | 1984 | ADC | M | + | TSW | 06/00 ▸ 09/01 | 6K0121253AA | 731267 | 628 | 377,5 | ALM |
| 2.0 i | 6V20 | E | 1984 | ADC | M | - | TSW | 06/00 ▸ 09/01 | 6K0121253AC | 731728 | 628 | 322 | ALM |
| 2.0 i | 6V20 | E | 1984 | ADC | A | + | TSW | 06/00 ▸ 09/01 | 6K0121253AA | 731267 | 628 | 377,5 | ALM |
| 2.0 i | 6V20 | E | 1984 | ADC | A | - | TSW | 06/00 ▸ 09/01 | 6K0121253AC | 731728 | 628 | 322 | ALM |
| 1.4 TDi | 6N20 | D | 1422 | AMF | M | +/- | TSW | 10/99 ▸ 10/01 | 6N0121253AC | 730955 | 628 | 377,5 | ALM |
| 1.4 TDi | 6N2/0/1/2/3 | D | 1422 | AMF | M | | TSW | 10/99 ▸ 09/01 | 6N0121253AE | 732953 | 497 | 377,5 | ALB |
| 1.4 TDi | 6N2/0/1/2/3 | D | 1422 | AMF,ATL | M | | TSW | 10/99 ▸ 09/01 | 6N0121253AK | 730954 | 508 | 377,5 | ALM |
| 1.7 SDi | 6N20 | D | 1716 | AKU | M | +/- | TSW | 10/99 ▸ 04/00 | 6N0121253B | 730503 | 430 | 322 | ALM |
| 1.7 SDi | 6N20 | D | 1716 | AKU | M | +/- | TSW | 10/99 ▸ | 6N0121253A | 730503 | 430 | 322 | ALM |
| 1.7 SDi | 6N20 | D | 1716 | AKU | M | - | TSW | 10/99 ▸ 04/00 | 6N0121253K | 730956 | 430 | 377,5 | ALM |
| 1.9 SDi | 6N20 | D | 1896 | AGD | M | +/- | TSW | 10/99 ▸ | 6N0121253A | 730503 | 430 | 322 | ALM |
| 1.9 D | 6N20 | D | 1896 | AEF | M | +/- | TSW | 10/99 ▸ 07/01 | 6N0121253L | 730954 | 508 | 377,5 | ALM |
| 1.9 SDi | 6N20 | D | 1896 | AGD | M | +/- | TSW | 10/99 ▸ 09/01 | 6N0121253B | 730503 | 430 | 322 | ALM |
| 1.9 SDi,1.9 TDi | 6V20 ; 6V50 | D | 1896 | AGP,AGR,ALH,AQM,ASV | M | +/- | TSW | 10/99 ▸ 09/01 | 6K0121253AS | 732710 | 628 | 377,5 | ALM |
| 1.9 TDi | 6V50 | D | 1896 | ASV | M | + | TSW | 10/99 ▸ 09/01 | 6K0121253AS | 732710 | 628 | 377,5 | ALM |
| 1.9 TDi | 6V20 ; 6V50 | D | 1896 | AGR,ASV | M | + | TSW | 10/99 ▸ 09/01 | 1HM121253D | 731268 | 628 | 377,5 | ALM |
| 1.9 TDi | 6V20 ; 6V50 | D | 1896 | AGR,ASV | M | + | TSW | 10/99 ▸ 09/01 | 6K0121253AA | 731267 | 628 | 377,5 | ALM |
| 1.9 SDi | 6N20 | D | 1896 | AGD | M | - | TSW | 10/99 ▸ 09/01 | 6N0121253K | 730956 | 430 | 377,5 | ALM |
| 1.9 TDi | 6V20 | D | 1896 | AGR | M | - | TSW | 10/99 ▸ 09/01 | 6K0121253AS | 732710 | 628 | 377,5 | ALM |
| 1.9 SDi | 6N2/0/1/2/3 | D | 1896 | AGD,ASX | M | | TSW | 10/99 ▸ 09/01 | 6N0121253K | 730956 | 430 | 377,5 | ALM |
| 1.9 D | 6N2/1/2/3 | D | 1896 | AEF | M | | TSW | 05/00 ▸ 07/01 | 6N0121253L | 730954 | 508 | 377,5 | ALM |

## POLO (2001>)

| | | | | | | | | | | | | | |
|---|---|---|---|---|---|---|---|---|---|---|---|---|---|
| 1.0 i | 9A21 | E | 999 | ARA | M | + | TSW | 03/03 ▸ 09/03 | 6QE121253A | 732862 | 632 | 414,5 | ALM |
| 1.0 i | 9A21 | E | 999 | ARA | M | | TSW | 03/03 ▸ 09/03 | 6QE121253 | 732863 | 430 | 414,5 | ALM |
| 1.2 i,1.2 i 12V,1.2 i 6V | 9N1/0/1/2/3/5 | E | 1198 | AWY,AZQ,BMD | M | +/- | TSW | 11/01 ▸ 05/05 | 6Q0121253Q | 732862 | 632 | 414,5 | ALM |
| 1.2 i,1.2 i 12V,1.2 i 6V | 9N1/0/1/2/3/5 | E | 1198 | AWY,AZQ,BMD,BME | M | +/- | TSW | 11/01 ▸ 05/05 | 6Q0121253R | 732864 | 632 | 414,5 | ALM |
| 1.2 i 6V | 9N1/0/1/2/5 | E | 1198 | AWY | M | + | TSW | 01/02 ▸ 07/04 | 6Q0121253Q | 732862 | 632 | 414,5 | ALM |
| 1.2 i 6V | 9N1/0/1/2/5 | E | 1198 | AWY | M | + | TSW | 01/02 ▸ 07/04 | 6Q0121253R | 732864 | 632 | 414,5 | ALM |
| 1.2 i 12V,1.2 i 6V | 9N1/0/1/2/3/5 | E | 1198 | AWY,AZQ | M | - | TSW | 11/01 ▸ 07/04 | 6Q0121253K | 732863 | 430 | 414,5 | ALM |
| 1.2 i 12V | 9N1/0/1/2/3/5 | E | 1198 | BME | M | | TSW | 11/01 ▸ 05/05 | 6Q0121253Q | 732862 | 632 | 414,5 | ALM |

Radiator Radiateur Motorkühler Radiatore di raffreddamento Radiator Radyatör Radiador Радиатор vízhűtő Vodní chladič Radiator Ψυγείο



• **New** Nouveau **Nuevo** Novo **Nuovo** Nieuw **Neu** Nowość **Yeni** Новый Νέο **Nový**

## POLO (2001>) (.../...)

| Type Ctr. | | E | CC | | AC | | | OE | Valeo | DIM. | TECH |
|---|---|---|---|---|---|---|---|---|---|---|---|
| 1.2 i 12V | 9N1/0/1/2/3/5 | E | 1198 | BME | M | | TSW | 11/01 ▸ 05/05 | 6Q0121253K | 732863 | 430 414,5 | ALM |
| 1.2 i 6V ▸ 9N-3-Y040 24 | 9N1/0/1/2 | E | 1198 | AWY | M | | TSW | 01/02 ▸ 06/02 | 6Q0121253AE | 732864 | 632 414,5 | ALM |
| 1.2 i 6V ▸ 9N-3-Y040 240 | 9N1/0/1/2 | E | 1198 | AWY | M | | TSW | 01/02 ▸ 06/02 | 6Q0121253J | 732863 | 430 414,5 | ALM |
| 1.4 16V,1.4 FSI 16V 1.4 i 16V | 9N1/0/1/2/3/5 ; 9N2 0/1 | E | 1390 | AUA,AUB,AXU,BBY,BBZ,BKY | M | +/- | TSW | 11/01 ▸ | 6Q0121253R | 732864 | 632 414,5 | ALM |
| 1.4 i 16V | 9N2/0/1 | E | 1390 | BBY | M | +/- | TSW | 07/03 ▸ 06/05 | 6Q0121253K | 732863 | 430 414,5 | ALM |
| 1.4 16V,1.4 FSI 16V 1.4 i 16V | 9N1/0/1/2/3/5 ; 9N2 0/1 | E | 1390 | AUA,AUB,AXU,BBY,BBZ,BKY | M | + | TSW | 11/01 ▸ | 6Q0121253Q | 732862 | 632 414,5 | ALM |
| 1.4 16V,1.4 FSI 16V 1.4 i 16V | 9N1/0/1/2/3/5 | E | 1390 | AUA,AXU,BBY | M | - | TSW | 11/01 ▸ | 6Q0121253J | 732863 | 430 414,5 | ALM |
| 1.4 16V,1.4 i 16V | 9N1/0/1/2/3/5 ; 9N2 0/1 | E | 1390 | AUA,BBY,BBZ | M | - | TSW | 11/01 ▸ | 6Q0121253K | 732863 | 430 414,5 | ALM |
| 1.4 16V,1.4 FSI 16V 1.4 i 16V | 9N1/0/1/2/3/5 ; 9N2 0/1 | E | 1390 | AUA,AXU,BBY,BBZ,BKY | M | - | TSW | 11/01 ▸ | 6Q0121253AE | 732864 | 632 414,5 | ALM |
| 1.4 i 16V | 9N1/0/1/2/3 | E | 1390 | AUB | M | | TSW | 11/01 ▸ 06/02 | 6Q0121253AE | 732864 | 632 414,5 | ALM |
| 1.4 i 16V | 9N1/0/1/2/3 | E | 1390 | AUB | M | | TSW | 11/01 ▸ 04/02 | 6Q0121253J | 732863 | 430 414,5 | ALM |
| 1.4 i 16V | 9A2/2/4 ; 9N1/0/1/2 3 ; 9N2/0/1 | E | 1390 | BBY,BKY | A | +/- | TSW | 11/01 ▸ 06/05 | 6Q0121253R | 732864 | 632 414,5 | ALM |
| 1.4 i 16V | 9N1/0/1/2/3 | E | 1390 | BBY | A | - | TSW | 11/01 ▸ | 6Q0121253J | 732863 | 430 414,5 | ALM |
| 1.4 i 16V | 9N1/0/1/2/3 | E | 1390 | BBY,BKY | A | - | TSW | 11/01 ▸ 05/05 | 6Q0121253AE | 732864 | 632 414,5 | ALM |
| 1.6 i | 9A2/1/2/3 | E | 1595 | BPA | M | + | TSW | 10/04 ▸ | 6QE121253A | 732862 | 632 414,5 | ALM |
| 1.6 i | 9A2/1/2/3 | E | 1595 | BPA | M | - | TSW | 10/04 ▸ | 6QE121253 | 732863 | 430 414,5 | ALM |
| 1.6 i | 9A2/1/2/3/4 | E | 1598 | BAH | M | + | TSW | 09/02 ▸ 06/05 | 6QE121253A | 732862 | 632 414,5 | ALM |
| 1.6 i | 9A2/1/2/3/4 | E | 1598 | BAH | M | - | TSW | 09/02 ▸ 06/05 | 6QE121253 | 732863 | 430 414,5 | ALM |
| 2.0 i | 9A2/2/3/4 | E | 1984 | BBX | M | + | TSW | 09/02 ▸ 06/05 | 6QE121253B | 732864 | 632 414,5 | ALM |
| 1.4 TDi | 9N1/0/1/2/3/5 ; 9N2 0/1 | D | 1422 | AMF,BAY | M | +/- | TSW | 11/01 ▸ 06/05 | 6Q0121253R | 732864 | 632 414,5 | ALM |
| 1.9 SDi,1.9 TDi | 9A2/2/4 ; 9N1/0/1/2 3/5 ; 9N2/0/1 | D | 1896 | ASY,ATD,AXR | M | +/- | TSW | 11/01 ▸ 06/05 | 6Q0121253R | 732864 | 632 414,5 | ALM |
| 1.9 TDi | 9N1/0/1/2/3 | D | 1896 | BLT | M | +/- | TSW | 05/04 ▸ 05/05 | 6Q0121253AD | 732864 | 632 414,5 | ALM |
| 1.9 TDi | 9N1/0/1/2/3/5 | D | 1896 | ATD,AXR | M | + | TSW | 11/01 ▸ 05/05 | 6Q0121253R | 732864 | 632 414,5 | ALM |
| 1.9 SDi ▸ 3 030 001 | 9A2/2/4 ; 9N1/0/1/2 3 ; 9N2/0/1 | D | 1896 | ASY | M | - | TSW | > ▸ 06/05 | 6Q0121253K | 732863 | 430 414,5 | ALM |
| 1.9 SDi,1.9 TDi | 9N1/0/1/2/3/5 | D | 1896 | ASY,ATD,AXR | M | - | TSW | 11/01 ▸ | 6Q0121253Q | 732862 | 632 414,5 | ALM |
| 1.9 TDi | 9N1/0/1/2/3 | D | 1896 | ASZ | M | | TSW | 11/03 ▸ 05/05 | 6Q0121253AD | 732864 | 632 414,5 | ALM |
| 1.9 SDi,1.9 TDi ▸ 3 030 000 | 9A2/2/4 ; 9N1/0/1/2 3 ; 9N2/0/1 | D | 1896 | ASY,AXR | M | + | TSW | 11/01 ▸ | 6Q0121253Q | 732862 | 632 414,5 | ALM |
| 1.9 SDi | 9N1/0/1/2/3 | D | 1896 | ASY | M | - | MODULE | 05/02 ▸ 06/02 | 6Q0121201BT | 733062 | 430 414,5 | ALM |

## POLO (2005>)

| Type Ctr. | | E | CC | | AC | | | OE | Valeo | DIM. | TECH |
|---|---|---|---|---|---|---|---|---|---|---|---|
| 1.2 i,1.2 i 12V,1.2 i 6V | 9N3/0/1/3/5 | E | 1198 | BBM,BMD,BME,BZG | M | +/- | TSW | 04/05 ▸ | 6Q0121253Q | 732862 | 632 414,5 | ALM |
| 1.2 i,1.2 i 12V,1.2 i 6V | 9N3/0/1/3/5 | E | 1198 | BBM,BMD,BME,BZG | M | +/- | TSW | 04/05 ▸ | 6Q0121253R | 732864 | 632 414,5 | ALM |
| 1.2 i,1.2 i 12V,1.2 i 6V | 9N3/0/1/3/5 | E | 1198 | BBM,BMD,BME,BZG | M | - | TSW | 04/05 ▸ | 6Q0121253K | 732863 | 430 414,5 | ALM |
| 1.4 i 16V | 9N3/0/1/3/5 | E | 1390 | BBZ,BKY,BUD | M | +/- | TSW | 04/05 ▸ | 6Q0121253R | 732864 | 632 414,5 | ALM |
| 1.4 i 16V | 9N3/0/1/3/5 | E | 1390 | BBZ,BKY,BUD | M | + | TSW | 04/05 ▸ | 6Q0121253Q | 732862 | 632 414,5 | ALM |
| 1.4 i 16V | 9N3/0/1/3/5 | E | 1390 | BBZ,BKY | M | - | TSW | 04/05 ▸ 07/07 | 6Q0121253K | 732863 | 430 414,5 | ALM |
| 1.4 FSi 16V,1.4 i 16V | 9N3/0/1/3/5 | E | 1390 | AXU,BBZ,BKY,BUD | M | - | TSW | 04/05 ▸ | 6Q0121253AE | 732864 | 632 414,5 | ALM |
| 1.4 i 16V | 9N3/0/1/3/5 | E | 1390 | BUD | M | | TSW | 05/06 ▸ | 6Q0121253K | 732863 | 430 414,5 | ALM |
| 1.4 i 16V | 9N3/0/1/3/5 | E | 1390 | BKY | A | +/- | TSW | 04/05 ▸ 07/07 | 6Q0121253R | 732864 | 632 414,5 | ALM |
| 1.4 i 16V | 9N3/0/1/3/5 | E | 1390 | BKY | A | + | TSW | 04/05 ▸ 07/07 | 6Q0121253Q | 732862 | 632 414,5 | ALM |
| 1.4 i 16V | 9N3/0/1/3/5 | E | 1390 | BKY | A | - | TSW | 04/05 ▸ 07/07 | 6Q0121253K | 732863 | 430 414,5 | ALM |
| 1.4 i 16V | 9N3/0/1/3/5 | E | 1390 | BKY | A | - | TSW | 04/05 ▸ 07/07 | 6Q0121253AE | 732864 | 632 414,5 | ALM |
| 1.6 i 16V | 9N3/0/1/3/5 | E | 1598 | BTS | M | +/- | TSW | 05/06 ▸ | 6Q0121253R | 732864 | 632 414,5 | ALM |
| 1.6 i 16V | 9N3/0/1/3/5 | E | 1598 | BTS | M | + | TSW | 05/06 ▸ | 6Q0121253Q | 732862 | 632 414,5 | ALM |
| 1.6 i 16V | 9N3/0/1/3/5 | E | 1598 | BTS | M | - | TSW | 05/06 ▸ | 6Q0121253AE | 732864 | 632 414,5 | ALM |
| 1.6 i 16V | 9N3/0/1/3/5 | E | 1598 | BTS | M | | TSW | 05/06 ▸ | 6Q0121253K | 732863 | 430 414,5 | ALM |
| 1.6 i 16V | 9N30 | E | 1598 | BTS | A | +/- | TSW | 11/06 ▸ | 6Q0121253R | 732864 | 632 414,5 | ALM |
| 1.6 i 16V | 9N30 | E | 1598 | BTS | A | + | TSW | 11/06 ▸ | 6Q0121253Q | 732862 | 632 414,5 | ALM |
| 1.6 i 16V | 9N30 | E | 1598 | BTS | A | - | TSW | 11/06 ▸ | 6Q0121253AE | 732864 | 632 414,5 | ALM |
| 1.6 i 16V | 9N30 | E | 1598 | BTS | A | | TSW | 11/06 ▸ | 6Q0121253K | 732863 | 430 414,5 | ALM |
| 1.8 GTI Turbo 20V | 9N36 | E | 1781 | BBU,BJX | M | + | TSW | 08/05 ▸ | 6Q0121253AD | 732864 | 632 414,5 | ALM |
| 1.4 TDi | 9N3/0/1/3/5 | D | 1422 | BMS,BNM,BNV,BWB | M | +/- | TSW | 04/05 ▸ | 6Q0121253R | 732864 | 632 414,5 | ALM |
| 1.4 TDi | 9N3/0/1/3/5 | D | 1422 | BMS,BWB | M | + | TSW | 10/05 ▸ | 6Q0121253R | 732864 | 632 414,5 | ALM |
| 1.4 TDi | 9N3/0/1/3/5 | D | 1422 | BMS,BWB | M | - | TSW | 10/05 ▸ | 6Q0121253Q | 732862 | 632 414,5 | ALM |
| 1.9 SDi | 9N3/0/1/3 | D | 1896 | ASY | M | +/- | TSW | 04/05 ▸ | 6Q0121253Q | 732862 | 632 414,5 | ALM |
| 1.9 SDi,1.9 TDi | 9N3/0/1/3/5 | D | 1896 | ASY,ATD,AXR,BMT | M | +/- | TSW | 04/05 ▸ | 6Q0121253R | 732864 | 632 414,5 | ALM |

# VOLKSWAGEN (.../...)

## POLO (2005>) (.../...)

| | | | CC | | | AC | | | OE | Valeo | DIM. | | TECH |
|---|---|---|---|---|---|---|---|---|---|---|---|---|---|
| 1.9 TDi | 9N3/0/1/3 | D | 1896 | ASZ,BLT | M | +/- | TSW | 04/05 ▸ | 6Q0121253AD | 732864 | 632 | 414,5 | ALM |
| 1.9 TDi | 9N3/0/1/3/5 | D | 1896 | ATD,AXR,BMT | M | + | TSW | 04/05 ▸ | 6Q0121253R | 732864 | 632 | 414,5 | ALM |
| 1.9 SDi | 9N3/0/1/3 | D | 1896 | ASY | M | - | TSW | 04/05 ▸ | 6Q0121253K | 732863 | 430 | 414,5 | ALM |
| 1.9 TDi | 9N3/0/1/3/5 | D | 1896 | ASZ,ATD,AXR,BLT,BMT | M | - | TSW | 04/05 ▸ | 6Q0121253Q | 732862 | 632 | 414,5 | ALM |
| 1.9 TDi | 9N3/0/1/3 | D | 1896 | ASZ,BLT | M | - | TSW | 04/05 ▸ | 6Q0121253R | 732864 | 632 | 414,5 | ALM |

## POLO (06/2009>)

| | | | | | | | | | | | | | |
|---|---|---|---|---|---|---|---|---|---|---|---|---|---|
| 1.2 i 60 12V,1.2 i 70 12V | 6R1/2/3/4 | E | 1198 | CGPA,CGPB,CHFA | M | | TSW | 06/09 ▸ | 6Q0121253K | 732863 | 430 | 414,5 | ALM |
| 1.4 i 85 16V | 6R1/2/3/4 | E | 1390 | CGGB | M | | TSW | 06/09 ▸ | 6Q0121253K | 732863 | 430 | 414,5 | ALM |
| 1.4 i 85 16V | 6R1/2/3/4 | E | 1390 | CGGB | A | | TSW | 06/09 ▸ | 6Q0121253K | 732863 | 430 | 414,5 | ALM |
| 1.2 TSi 105 16V | 6R12-13-14/F7 | E | 1197 | CBZB | A | | RAX | 11/09 ▸ | 6R0145805H | •735310 | 86,25 | 646,4 | ALB |
| 1.2 TSi 105 16V | 6R12-13-14/F7 | E | 1197 | CBZB | A | | RAX | 11/09 ▸ | 6R0145805H | •735310 | 86,25 | 646,4 | ALB |

## SANTANA

| | | | | | | | | | | | | | |
|---|---|---|---|---|---|---|---|---|---|---|---|---|---|
| 1.3 | 327/0/5 | E | 1297 | EP | M | - | TSW | 08/83 ▸ 12/84 | 171121253CJ | 883819 | 430 | 322 | ALM |
| 1.6 | 327/6/7/B/C ; 328/6/7/B/C | E | 1588 | WV,YP | M | + | | 08/81 ▸ 07/83 | 823121251D | | 430 | 340,5 | ALM |
| 1.6 | 3276 | E | 1588 | WV | M | + | | 08/81 ▸ 07/84 | 321121251AS | | 700 | 322 | ALM |
| 1.6 | 327B | E | 1588 | YP | M | - | | 08/81 ▸ 12/82 | 321121251AS | | 700 | 322 | ALM |
| 1.6 | 327/6/7/B/C ; 328/6/7/B/C | E | 1588 | WV,YP | M | | | 08/81 ▸ 07/84 | 321121253C | | 430 | 340,5 | ALM |
| 1.6 | 327/6/7 ; 328/6/7 | E | 1588 | WV,YP | A | + | | 08/81 ▸ 07/83 | 823121251D | | 430 | 340,5 | ALM |
| 1.6 | 327/6/7 | E | 1588 | WV | A | + | | 08/81 ▸ 07/84 | 321121251AS | | 700 | 322 | ALM |
| 1.6 | 327/6/7 | E | 1588 | WV,YP | A | - | | 08/81 ▸ 07/83 | 321121251AS | | 700 | 322 | ALM |
| 1.6 | 327/6/7 ; 328/6/7 | E | 1588 | WV,YP | A | | | 08/81 ▸ 07/84 | 321121253C | | 430 | 340,5 | ALM |
| 1.6 | 327/0/1/2/5/6/7 ; 328/0/5 | E | 1595 | DT | M | + | | 08/83 ▸ 07/86 | 321121251AL | | 700 | 322 | ALM |
| 1.6 | 327/5/6 | E | 1595 | DT | M | - | TSW | 08/83 ▸ 03/88 | 321121253BM | 883720 | 525 | 322 | ALM |
| 1.6 | 327/0/1/2/5/6/7/A | E | 1595 | DT,JU | M | - | TSW | 08/83 ▸ 12/84 | 171121253CJ | 883819 | 430 | 322 | ALM |
| 1.6 | 327/0/1/2/6/7 ; 328/0/5 | E | 1595 | DT,JU | M | | TSW | 08/83 ▸ 12/84 | 171121253CJ | 883819 | 430 | 322 | ALM |
| 1.6 | 327/0/1/2/5/6/7 | E | 1595 | DT | A | + | | 08/83 ▸ 07/86 | 321121251AL | | 700 | 322 | ALM |
| 1.6 | 327/5/6 | E | 1595 | DT | A | - | TSW | 08/83 ▸ 07/84 | 171121253CJ | 883819 | 430 | 322 | ALM |
| 1.6 | 327/5/6 | E | 1595 | DT | A | - | TSW | 08/84 ▸ 03/88 | 321121253BM | 883720 | 525 | 322 | ALM |
| 1.6 | 327/0/1/2/7 | E | 1595 | DT | A | | TSW | 08/83 ▸ 12/84 | 171121253CJ | 883819 | 430 | 322 | ALM |
| 1.8 | 327B | E | 1781 | DS | M | + | | 01/82 ▸ 07/83 | 321121251AS | | 700 | 322 | ALM |
| 1.8,1.8 i | 327/0/1/2/5/6/7/B/C G/H ; 328/1/6 | E | 1781 | DS,JN,JV | M | + | | 01/83 ▸ 03/88 | 321121251AL | | 700 | 322 | ALM |
| 1.8 | 327/5/6/7 | E | 1781 | DS,JV | M | - | TSW | 01/83 ▸ 03/88 | 171121253CJ | 883819 | 430 | 322 | ALM |
| 1.8,1.8 i | 327/5/6/7/B/C/G/H | E | 1781 | DS,JN,JV | M | - | TSW | 01/83 ▸ 03/88 | 321121253BM | 883720 | 525 | 322 | ALM |
| 1.8 | 327/0/1/2/5/6/7/B/C ; 328/1/6 | E | 1781 | DS | M | | TSW | 01/83 ▸ 12/84 | 171121253CJ | 883819 | 430 | 322 | ALM |
| 1.8 i | 327/1/2 | E | 1781 | JN | M | | TSW | 08/84 ▸ 12/84 | 321121253BM | 883720 | 525 | 322 | ALM |
| 1.8,1.8 i | 327/0/1/2/5/6/7/G/H 328/1/6 | E | 1781 | DS,JN | A | + | | 01/83 ▸ 03/88 | 321121251AL | | 700 | 322 | ALM |
| 1.8,1.8 i | 327/0/1/5/G/H | E | 1781 | DS,JN | A | - | TSW | 08/83 ▸ 03/88 | 321121253BM | 883720 | 525 | 322 | ALM |
| 1.8 | 327/0/1 | E | 1781 | DS | A | - | TSW | 08/84 ▸ 12/84 | 171121253CJ | 883819 | 430 | 322 | ALM |
| 1.8 | 327/2/5/6/7 ; 328/1/6 | E | 1781 | DS | A | | TSW | 01/83 ▸ 12/84 | 171121253CJ | 883819 | 430 | 322 | ALM |
| 1.8 i | 327/1/2 | E | 1781 | JN | A | | TSW | 08/84 ▸ 12/84 | 321121253BM | 883720 | 525 | 322 | ALM |
| 1.8 | 327B ▸ 32-D-300 000 | E | 1781 | DS | M | - | | 01/82 ▸ 07/83 | 321121253H | | 525 | 322 | ALM |
| 1.9 | 3276 | E | 1921 | WN | M | - | TSW | 08/81 ▸ 07/83 | 321121253BQ | 883864 | 470 | 377,5 | ALM |
| 1.9 | 327/7 ; 328/5/6/7 | E | 1921 | WN | M | | TSW | 08/81 ▸ 07/83 | 321121253BQ | 883864 | 470 | 377,5 | ALM |
| 1.9 | 3276 | E | 1921 | WN | A | - | TSW | 08/81 ▸ 07/83 | 321121253BQ | 883864 | 470 | 377,5 | ALM |
| 1.9 | 327/6/7 ; 328/6/7 | E | 1921 | WN | A | | TSW | 08/81 ▸ 07/83 | 321121253BQ | 883864 | 470 | 377,5 | ALM |
| 2.0 i | 3286 ; 327/6/7 | E | 1994 | HP,JS | M | - | TSW | 08/83 ▸ 03/88 | 321121253AG | 883864 | 470 | 377,5 | ALM |
| 2.0 i | 327/1/2/7 ; 328/2/6/7 | E | 1994 | HP,JS | M | | TSW | 08/83 ▸ 12/84 | 321121253AG | 883864 | 470 | 377,5 | ALM |
| 2.0 i | 327/1/6/7 | E | 1994 | HP,JS | A | - | TSW | 08/83 ▸ 03/88 | 321121253AG | 883864 | 470 | 377,5 | ALM |
| 2.0 i | 327/1/2/6/7 ; 328/2/7 | E | 1994 | HP,JS | A | | TSW | 08/83 ▸ 12/84 | 321121253BQ | 883864 | 470 | 377,5 | ALM |
| 2.2 i | 3277 | E | 2144 | WE | M | - | TSW | 08/81 ▸ 07/82 | 321121253AG | 883864 | 470 | 377,5 | ALM |
| 2.2 i | 327/6/7 | E | 2144 | WE | A | - | TSW | 08/81 ▸ 07/83 | 321121253AG | 883864 | 470 | 377,5 | ALM |
| 2.2 i | 3276 | E | 2144 | WE | A | | TSW | 08/82 ▸ 07/83 | 321121253AG | 883864 | 470 | 377,5 | ALM |
| 1.6 D,1.6 TD | 237/5/6 ; 3287 ; 327 5/6/7 | D | 1588 | CR,CY,JK | M | + | | 08/81 ▸ 07/84 | 321121253BL | | 700 | 319 | CBS |
| 1.6 D | 327/5/6 | D | 1588 | JK | M | + | | 08/82 ▸ 03/88 | 321121251AL | | 700 | 322 | ALM |
| 1.6 D | 327/6/7 | D | 1588 | CR | M | - | TSW | 08/81 ▸ 07/82 | 321121253BM | 883720 | 525 | 322 | ALM |
| 1.6 D | 327/5/6 | D | 1588 | JK | M | - | | 08/82 ▸ 03/88 | 321121251AL | | 700 | 322 | ALM |
| 1.6 D | 327/6/7 ; 328/6/7 | D | 1588 | CR | M | | TSW | 08/81 ▸ 07/82 | 321121253BM | 883720 | 525 | 322 | ALM |
| 1.6 D | 327/5/6 | D | 1588 | JK | M | | | 08/82 ▸ 07/85 | 321121253B | | 430 | 340,5 | ALM |
| 1.6 D | 3275 | D | 1588 | JK | M | | TSW | 08/83 ▸ 07/84 | 321121253AG | 883864 | 470 | 377,5 | ALM |
| 1.6 D,1.6 TD | 237/7 ; 3287 ; 327/5 6/7 | D | 1588 | CR,CY,JK | A | + | | 08/81 ▸ 07/84 | 321121253BL | | 700 | 319 | CBS |
| 1.6 D | 3275 | D | 1588 | JK | A | + | | 08/83 ▸ 07/84 | 321121251AL | | 700 | 322 | ALM |
| 1.6 D | 327/6/7 | D | 1588 | CR | A | - | TSW | 08/81 ▸ 07/82 | 321121253BM | 883720 | 525 | 322 | ALM |
| 1.6 D | 3275 | D | 1588 | JK | A | - | | 08/83 ▸ 07/84 | 321121251AL | | 700 | 322 | ALM |

Radiator Radiateur Motorkühler Radiatore di raffreddamento Radiator Radyatör Radiador Радиатор vízhűtő Vodní chladič Radiator Ψυγείο



• **New** Nouveau **Nuevo** Novo **Nuovo** Nieuw **Neu** Nowość **Yeni** Новый Νέο **Nový**

## SANTANA (.../...)

| | | | CC | | | AC | | | OE | Valeo | DIM. | | TECH |
|---|---|---|---|---|---|---|---|---|---|---|---|---|---|
| 1.6 D | 328/6/7 | D | 1588 | CR | A | | TSW | 08/81 ▸ 07/82 | 321121253BM | 883720 | 525 | 322 | ALM |
| 1.6 D | 3275 | D | 1588 | JK | A | | | 08/83 ▸ 07/84 | 321121253C | | 430 | 340,5 | ALM |

## SCIROCCO (74>90)

| | | | | | | | | | | | | | |
|---|---|---|---|---|---|---|---|---|---|---|---|---|---|
| 1.1 | 531//0 | E | 1093 | FA,FJ | M | | | > ▸ 07/76 | 171121253E | | 430 | 322 | ALM |
| M-008054, M-298178 ▸ | | | | | | | | | | | | | |
| 1.1 | 531//2 | E | 1093 | FA,FJ | M | | | 08/76 ▸ 07/80 | 171121253D | | 480 | 322 | ALM |
| 1.1 | 531//0 | E | 1093 | FA,FJ | M | | | 04/74 ▸ | 171121253AD | | 380 | 322 | ALM |
| ▸ M-008053, M-293177 | | | | | | | | | | | | | |
| 1.3 | 533 | E | 1272 | GF,HK | M | | TSW | > ▸ 07/84 | 171121253CJ | 883819 | 430 | 322 | ALM |
| 17-D-330001, 15-D-007001 ▸ | | | | | | | | | | | | | |
| 1.5 | 533 | E | 1457 | JB | M | + | TSW | 08/81 ▸ 07/83 | 321121253AL | 883727 | 525 | 322 | ALM |
| 16-D-330001, 53-D-015001 ▸ | | | | | | | | | | | | | |
| 1.5 | 533 | E | 1457 | JB | M | - | TSW | > ▸ 07/83 | 191121253K | 883820 | 430 | 322 | ALM |
| 15-D-007001, 16-D-330001 ▸ | | | | | | | | | | | | | |
| 1.5 | 533 | E | 1457 | JB | M | | TSW | > ▸ 07/83 | 191121253K | 883820 | 430 | 322 | ALM |
| 53-D-015001, 17-D-330001 ▸ | | | | | | | | | | | | | |
| 1.5 | 533 | E | 1457 | JB | A | + | TSW | 08/81 ▸ 07/83 | 321121253AL | 883727 | 525 | 322 | ALM |
| 17-D-330001, 16-D-330001 ▸ | | | | | | | | | | | | | |
| 1.5 | 533 | E | 1457 | JB | A | - | TSW | > ▸ 07/83 | 191121253K | 883820 | 430 | 322 | ALM |
| 17-D-330001, 15-D-007001 ▸ | | | | | | | | | | | | | |
| 1.5 | 533 | E | 1457 | JB | A | | TSW | > ▸ 07/83 | 191121253K | 883820 | 430 | 322 | ALM |
| 17-D-330001, 16-D-330001 ▸ | | | | | | | | | | | | | |
| 1.5 | 531 ; 533 | E | 1457 | FB,GH,JB | M | | | 02/74 ▸ | 171121253BD | | 430 | 322 | ALM |
| ▸ 15-D-007000, 53-D-015000 | | | | | | | | | | | | | |
| 1.5 | 531 ; 533 | E | 1457 | FD,GH,JB | A | | | 02/74 ▸ | 171121253BD | | 430 | 322 | ALM |
| ▸ 17-D-330000, 16-D-330000 | | | | | | | | | | | | | |
| 1.5 | 531 | E | 1471 | FH,FK | A | | | 02/74 ▸ 12/75 | 171121253BD | | 430 | 322 | ALM |
| 1.6 | 531 | E | 1588 | FP,FR,FT,FV | M | + | | 08/75 ▸ 07/79 | 171121253G | | 480 | 322 | ALM |
| 1.6 | 531 | E | 1588 | EG | M | + | | 08/76 ▸ 07/82 | 171121253CL | | 525 | 322 | ALM |
| 1.6 | 531 | E | 1588 | FR | M | + | | 08/80 ▸ 07/81 | 171121253D | | 480 | 322 | ALM |
| 1.6 | 533 | E | 1588 | EM,FR | M | + | TSW | 08/81 ▸ 07/83 | 321121253AL | 883727 | 525 | 322 | ALM |
| 53-D-015001, 15-D-007001 ▸ | | | | | | | | | | | | | |
| 1.6 | 533 | E | 1588 | EM,FR | M | - | TSW | > ▸ 07/83 | 191121253K | 883820 | 430 | 322 | ALM |
| 17-D-330001, 16-D-330001 ▸ | | | | | | | | | | | | | |
| 1.6 | 531 | E | 1588 | EG,FR | M | | | > ▸ 07/82 | 171121253D | | 480 | 322 | ALM |
| F-340739, 15-A-0819463 ▸ | | | | | | | | | | | | | |
| 1.6 | 533 | E | 1588 | EM,FR | M | | TSW | > ▸ 07/83 | 191121253K | 883820 | 430 | 322 | ALM |
| 16-D-330001, 17-D-330001 ▸ | | | | | | | | | | | | | |
| 1.6 | 531 | E | 1588 | FP,FR,FT,FV | A | + | | 08/75 ▸ 07/79 | 171121253G | | 480 | 322 | ALM |
| 1.6 | 531 | E | 1588 | FR | A | + | | 08/80 ▸ 07/81 | 171121253D | | 480 | 322 | ALM |
| 1.6 | 533 | E | 1588 | EM,FR | A | + | TSW | 08/81 ▸ 07/83 | 321121253AL | 883727 | 525 | 322 | ALM |
| 15-D-007001, 53-D-015001 ▸ | | | | | | | | | | | | | |
| 1.6 | 533 | E | 1588 | EM,FR | A | - | TSW | > ▸ 07/83 | 191121253K | 883820 | 430 | 322 | ALM |
| 53-D-015001, 16-D-330001 ▸ | | | | | | | | | | | | | |
| 1.6 | 533 | E | 1588 | EM,FR | A | | TSW | > ▸ 07/83 | 191121253K | 883820 | 430 | 322 | ALM |
| 16-D-330001, 15-D-007001 ▸ | | | | | | | | | | | | | |
| 1.6 | 531 | E | 1588 | FR | A | | | > ▸ 07/80 | 171121253D | | 480 | 322 | ALM |
| F-020002, F-340739 ▸ | | | | | | | | | | | | | |
| 1.6 | 531 ; 533 | E | 1588 | EM,FP,FR,FT,FV | M | | | 08/75 ▸ | 171121253BD | | 430 | 322 | ALM |
| ▸ 17-D-330000, 15-D-007000 | | | | | | | | | | | | | |
| 1.6 | 531 ; 533 | E | 1588 | EM,FP,FR,FT,FV | A | | | 08/75 ▸ | 171121253BD | | 430 | 322 | ALM |
| ▸ 17-D-330000, 53-D-015000 | | | | | | | | | | | | | |
| 1.6 | 531 | E | 1588 | EC,EE,EF,EG,EM,FN,FR | M | | | 08/75 ▸ | 171121253G | | 480 | 322 | ALM |
| ▸ F-020001, 15-A-0819462 | | | | | | | | | | | | | |
| 1.6 | 531 | E | 1588 | EF,FN,FR | A | | | 08/75 ▸ | 171121253G | | 480 | 322 | ALM |
| ▸ F-020001, F-340738 | | | | | | | | | | | | | |
| 1.6 | 533//1/4 | E | 1595 | EW,EWA,HN | M | + | TSW | 08/83 ▸ 07/90 | 321121253AL | 883727 | 525 | 322 | ALM |
| 1.6 | 533//1/4 | E | 1595 | EW,EWA,HN | M | - | TSW | 08/83 ▸ 07/90 | 191121253K | 883820 | 430 | 322 | ALM |
| 1.6 | 533 | E | 1595 | EW,HN | A | + | TSW | 08/83 ▸ 07/86 | 321121253AL | 883727 | 525 | 322 | ALM |
| 1.6 | 533 | E | 1595 | EW,HN | A | - | TSW | 08/83 ▸ 07/86 | 191121253K | 883820 | 430 | 322 | ALM |
| 1.7 | 533 | E | 1716 | EN | M | + | TSW | 08/81 ▸ 07/83 | 321121253AL | 883727 | 525 | 322 | ALM |
| 15-D-007001, 17-D-330001 ▸ | | | | | | | | | | | | | |
| 1.7 | 533 | E | 1716 | EN | M | - | TSW | > ▸ 07/83 | 191121253K | 883820 | 430 | 322 | ALM |
| 53-D-015001, 17-D-330001 ▸ | | | | | | | | | | | | | |
| 1.7 | 533 | E | 1716 | EN | M | | TSW | > ▸ 07/83 | 191121253K | 883820 | 430 | 322 | ALM |
| 16-D-330001, 15-D-007001 ▸ | | | | | | | | | | | | | |
| 1.7 | 533 | E | 1716 | EN | M | | | 08/81 ▸ | 171121253BD | | 430 | 322 | ALM |
| ▸ 15-D-007000, 16-D-330000 | | | | | | | | | | | | | |
| 1.8 | 533//1 | E | 1781 | EX,JH,JJ | M | + | TSW | 08/82 ▸ 07/90 | 321121253AL | 883727 | 525 | 322 | ALM |

# VOLKSWAGEN (.../...)

## SCIROCCO (74>90) (.../...)

| | | | CC | | | AC | | | OE | Valeo | DIM. | | TECH |
|---|---|---|---|---|---|---|---|---|---|---|---|---|---|
| 1.8 | 533//1 | E | 1781 | EX,JH,JJ | M | - | TSW | 08/82 ▸ 07/90 | 191121253K | 883820 | 430 | 322 | ALM |
| 1.8 | 533//4 | E | 1781 | DX,KT | M | | TSW | 08/82 ▸ 07/87 | 321121253AL | 883727 | 525 | 322 | ALM |
| 1.8 16V | 533//2 | E | 1781 | KR,PL | M | | TSW | 10/85 ▸ 07/90 | 191121251C | 883849 | 675 | 322 | ALM |
| 1.8 | 5331 | E | 1781 | EX | A | + | TSW | 08/83 ▸ 07/90 | 321121253AL | 883727 | 525 | 322 | ALM |
| 1.8 | 5331 | E | 1781 | EX | A | - | TSW | 08/83 ▸ 07/90 | 191121253K | 883820 | 430 | 322 | ALM |

## SCIROCCO (2008>)

| | | | | | | | | | | | | | |
|---|---|---|---|---|---|---|---|---|---|---|---|---|---|
| 1.4 TSI 16V | 1372 | E | 1390 | CAXA | M | | TSW | 11/08 ▸ | 1K0121253BB | 732872 | 650 | 414,5 | ALM |
| 2.0 TFSI 16V | 137R | E | 1984 | CDLA,CDLC | M | | Air Seal | 11/09 ▸ | 1K0121251AB | 734333 | 650 | 454,3 | ALB |
| 2.0 TDI 16V | 1372 | D | 1968 | CBBB/F,CBDB/F | M | | Air Seal | 09/08 ▸ | 1K0121251AB | 734333 | 650 | 454,3 | ALB |
| 2.0 TDI 16V | 1372 | D | 1968 | CBBB/F,CBDB/F | A | | Air Seal | 08/08 ▸ | 1K0121251DM | 734333 | 650 | 454,3 | ALB |

## SHARAN (95>2000)

| | | | | | | | | | | | | | |
|---|---|---|---|---|---|---|---|---|---|---|---|---|---|
| 1.8 i Turbo 20V | 7M8/2/3/5/9 | E | 1781 | AJH | M | +/- | TSW 820035 | 11/97 ▸ 02/00 | 7M0121253K | 732797 | 646,6 | 377,5 | ALM |
| 1.8 i Turbo 20V | 7M8/2/3/5/9 | E | 1781 | AJH | M | | TSW | 11/97 ▸ 02/00 | 701121253K | 732397 | 720 | 377,5 | ALM |
| 1.8 i Turbo 20V | 7M8/2/3/5/9 | E | 1781 | AJH | A | +/- | TSW 820035 | 11/97 ▸ 02/00 | 7M0121253K | 732797 | 646,6 | 377,5 | ALM |
| 1.8 i Turbo 20V | 7M8/2/3/5/9 | E | 1781 | AJH | A | | TSW | 11/97 ▸ 02/00 | 701121253K | 732397 | 720 | 377,5 | ALM |
| 2.0 i | 7M8/2/3/5/9 | E | 1984 | ADY | M | +/- | TSW 820035 | 09/95 ▸ 02/00 | 7M0121253B | 731386 | 646 | 377 | ALM |
| 2.0 i | 7M8/2/3/5/9 | E | 1984 | ADY | A | +/- | TSW 820035 | 09/95 ▸ 02/00 | 7M0121253B | 731386 | 646 | 377 | ALM |
| 2.8 i VR6 | 7M8/3/5/9 | E | 2792 | AAA,AMY | M | +/- | TSW 820035 | 09/95 ▸ 02/00 | 7M0121253D | 731387 | 645 | 470 | ALM |
| 2.8 i VR6 | 7M8/3/5/9 | E | 2792 | AAA,AMY | A | +/- | TSW 820035 | 09/95 ▸ 02/00 | 7M0121253D | 731387 | 645 | 470 | ALM |
| 1.9 TDi | 7M8/2/3/5/9 | D | 1896 | 1Z,AFN,AHU,AVG | M | +/- | TSW 820035 | 09/95 ▸ 02/00 | 7M0121253B | 731386 | 646 | 377 | ALM |
| 1.9 TDi | 7M8/2/3/5/9 | D | 1896 | ANU | M | +/- | TSW 820035 | 03/99 ▸ 02/00 | 7M0121253K | 732797 | 646,6 | 377,5 | ALM |
| 1.9 TDi | 7M8/2/3/5/9 | D | 1896 | ANU | M | | TSW | 03/99 ▸ 02/00 | 701121253K | 732397 | 720 | 377,5 | ALM |
| 1.9 TDi | 7M8/2/3/5/9 | D | 1896 | AFN,AVG | A | +/- | TSW 820035 | 12/96 ▸ 02/00 | 7M0121253B | 731386 | 646 | 377 | ALM |

## SHARAN (2000>2003)

| | | | | | | | | | | | | | |
|---|---|---|---|---|---|---|---|---|---|---|---|---|---|
| 1.8 i Turbo 20V | 7M9/2/3/5/9 | E | 1781 | AWC | M | +/- | TSW | 04/00 ▸ 05/03 | 7M3121253B | 732790 | 635 | 377 | ALB |
| 1.8 i Turbo 20V | 7M9/2/3/5/9 | E | 1781 | AWC | A | +/- | TSW | 04/00 ▸ 05/03 | 7M3121253B | 732790 | 635 | 377 | ALB |
| 2.0 i | 7M9/2/3/5/9 | E | 1984 | ATM | M | +/- | TSW | 04/00 ▸ 05/03 | 7M3121253B | 732790 | 635 | 377 | ALB |
| 2.0 i | 7M9/2/3/5/9 | E | 1984 | ATM | A | +/- | TSW | 04/00 ▸ 05/03 | 7M3121253B | 732790 | 635 | 377 | ALB |
| 2.8 i V6 | 7M9/2/3/5/9 | E | 2792 | AYL | M | +/- | TSW 820035 | 04/00 ▸ 05/03 | 7M3121253A | 732786 | 635 | 469,5 | ALB |
| 2.8 i V6,2.8 i VR6 | 7M9/2/3/5/9 | E | 2792 | AYL | A | +/- | TSW 820035 | 04/00 ▸ 05/03 | 7M3121253A | 732786 | 635 | 469,5 | ALB |
| 1.9 TDi | 7M9/2/3/5/9 | D | 1896 | ANU,AUY | M | +/- | TSW | 04/00 ▸ 05/03 | 7M3121253B | 732790 | 635 | 377 | ALB |
| 1.9 TDi | 7M9/2/3/5/9 | D | 1896 | AUY | A | +/- | TSW | 10/00 ▸ 05/03 | 7M3121253B | 732790 | 635 | 377 | ALB |

## SHARAN (2003>2010)

| | | | | | | | | | | | | | |
|---|---|---|---|---|---|---|---|---|---|---|---|---|---|
| 2.0 i | 7M6/0/1/2/3 | G | 1984 | ATM | M | +/- | TSW | 05/08 ▸ 03/10 | 7M3121253B | 732790 | 635 | 377 | ALB |
| 1.8 i Turbo 20V | 7M6/0/1/2/3/S/T | E | 1781 | AWC | M | +/- | TSW | 06/03 ▸ 03/10 | 7M3121253B | 732790 | 635 | 377 | ALB |
| 1.8 i Turbo 20V | 7M6/0/1/2/3/S/T | E | 1781 | AWC | A | +/- | TSW | 06/03 ▸ 05/06 | 7M3121253B | 732790 | 635 | 377 | ALB |
| 2.0 i | 7M6/0/1/2/3/S/T | E | 1984 | ATM | M | +/- | TSW | 06/03 ▸ 11/08 | 7M3121253B | 732790 | 635 | 377 | ALB |
| 2.0 i | 7M6/0/1/2/3/S/T | E | 1984 | ATM | A | +/- | TSW | 06/03 ▸ 05/08 | 7M3121253B | 732790 | 635 | 377 | ALB |
| 2.8 i VR6 | 7M6/0/1/2/3/S/T | E | 2792 | AYL | M | +/- | TSW 820035 | 06/03 ▸ 03/10 | 7M3121253A | 732786 | 635 | 469,5 | ALB |
| 2.8 i VR6 | 7M6/0/1/2/3/S/T | E | 2792 | AYL | A | +/- | TSW 820035 | 06/03 ▸ 03/10 | 7M3121253A | 732786 | 635 | 469,5 | ALB |
| 1.9 TDi | 7M6/0/1/2/3/S/T | D | 1896 | ANU,AUY,BVK | M | +/- | TSW | 06/03 ▸ 03/10 | 7M3121253B | 732790 | 635 | 377 | ALB |
| 1.9 TDi | 7M60 | D | 1896 | BVK | M | | TSW | 12/06 ▸ 03/10 | 7M3121253B | 732790 | 635 | 377 | ALB |
| 1.9 TDi | 7M6/0/1/2/3/S/T | D | 1896 | AUY,BVK | A | +/- | TSW | 06/03 ▸ 03/10 | 7M3121253B | 732790 | 635 | 377 | ALB |

## SHARAN (2010>)

| | | | | | | | | | | | | | |
|---|---|---|---|---|---|---|---|---|---|---|---|---|---|
| 1.4 TSi 150 | 7N1/2/3/4 | E | 1390 | CAVA | M | +/- | | 05/10 ▸ | 5N0121253H | 735133 | 650 | 406 | ALB |
| 1.4 TSi 150 | 7N1/2/3/4 | E | 1390 | CAVA | A | +/- | | 11/10 ▸ | 5N0121253H | 735133 | 650 | 406 | ALB |

## TIGUAN

| | | | | | | | | | | | | | |
|---|---|---|---|---|---|---|---|---|---|---|---|---|---|
| 1.4 TSi 16V | 5N1/0/1/2 | E | 1390 | BWK | M | +/- | | 11/07 ▸ | 5N0121253H | 735133 | 650 | 406 | ALB |
| 1.4 TSi 16V | 5N1/0/1 | E | 1390 | CAVA | M | | | 05/08 ▸ | 5N0121253H | 735133 | 650 | 406 | ALB |
| 1.4 TSi 122 16V | 5N10 | E | 1390 | CAXA | M | | | 08/10 ▸ | 1K0121251EC | •735375 | 626,8 | | ALB |

## TOUAREG (2002>2006)

| | | | | | | | | | | | | | |
|---|---|---|---|---|---|---|---|---|---|---|---|---|---|
| 3.2 i V6 24V | 7LAA | E | 3189 | AZZ | M | +/- | TSW | 01/03 ▸ | 7L0121253 | 734741 | 710 | 551 | ALB |
| 3.2 i V6 24V | 7LAA | E | 3189 | BKJ | M | + | TSW | 05/03 ▸ | 7L0121253 | 734741 | 710 | 551 | ALB |
| 3.2 i V6 24V | 7LAA | E | 3189 | BMV | M | + | TSW | 05/04 ▸ 11/06 | 7L0121253A | 734741 | 710 | 551 | ALB |
| 3.2 i V6 24V | 7LAA | E | 3189 | AZZ,BKJ | M | | TSW | 01/03 ▸ 05/04 | 7L0121253A | 734741 | 710 | 551 | ALB |
| 3.2 i V6 24V | 7LA/A/B | E | 3189 | AZZ | A | +/- | TSW | 11/02 ▸ | 7L0121253 | 734741 | 710 | 551 | ALB |
| 3.2 i V6 24V | 7LAB ; 7L6/0/5 | E | 3189 | BMV | A | +/- | TSW | 05/04 ▸ 11/06 | 7L0121253A | 734741 | 710 | 551 | ALB |
| 3.2 i V6 24V | 7LA/A/B | E | 3189 | BAA,BKJ | A | + | TSW | 05/03 ▸ | 7L0121253 | 734741 | 710 | 551 | ALB |
| 3.2 i V6 24V | 7LA/A/B | E | 3189 | BMV | A | + | TSW | 05/04 ▸ 11/06 | 7L0121253A | 734741 | 710 | 551 | ALB |
| 3.2 i V6 24V | 7LA/A/B | E | 3189 | AZZ,BAA,BKJ,BRJ | A | | TSW | 11/02 ▸ 05/06 | 7L0121253A | 734741 | 710 | 551 | ALB |
| 3.6 FSi V6 24V | 7LAA | E | 3597 | BHK | M | +/- | TSW | 10/05 ▸ 11/06 | 7L0121253A | 734741 | 710 | 551 | ALB |
| 3.6 FSi V6 24V | 7L60 | E | 3597 | BHK | A | +/- | TSW | 08/06 ▸ 11/06 | 7L0121253A | 734741 | 710 | 551 | ALB |
| 3.6 FSi V6 24V | 7L6/5/6/7 | E | 3597 | BHK | A | +/- | TSW | 08/06 ▸ 11/06 | 7L6121253A | 734740 | 710 | 551 | ALB |

Radiator Radiateur Motorkühler Radiatore di raffreddamento Radiator Radyatör Radiador Радиатор vízhűtő Vodní chladič Radiator Ψυγείο



• **New** Nouveau **Nuevo** Novo **Nuovo** Nieuw **Neu** Nowość **Yeni** Новый Νέο **Novy**

# VOLKSWAGEN (.../...)

## TOUAREG (2002>2006) (.../...)

| | Type Ctr. | | CC | | | AC | | | OE | Valeo | DIM. | TECH |
|---|---|---|---|---|---|---|---|---|---|---|---|---|
| 4.2 i V8 40V | 7LA/A/B/C/D | E | 4172 | AXQ | A | +/- | TSW | 12/02 ▸ | 7L0121253 | **734741** | 710 551 | ALB |
| 4.2 i V8 40V | 7LA/A/B/C/D | E | 4172 | AXQ | A | | TSW | 12/02 ▸ 11/06 | 7L0121253A | **734741** | 710 551 | ALB |
| 6.0 i W12 48V | 7L60 | E | 5998 | BJN | A | +/- | TSW | 11/06 ▸ 11/06 | 7L6121253E | **734740** | 710 551 | ALB |
| 6.0 i W12 48V | 7LA/A/F | E | 5998 | BJN | A | + | TSW | 08/04 ▸ 11/06 | 7L6121253E | **734740** | 710 551 | ALB |
| 6.0 i W12 48V | 7LA/A/F | E | 5998 | BJN | A | + | TSW | 08/04 ▸ 05/05 | 7L6121253A | **734740** | 710 551 | ALB |
| 2.5 TDi | 7LAA | D | 2460 | BAC,BLK,BPD,BPE | M | + | | 01/03 ▸ 11/06 | 7L6121253C | **734739** | 710 551 | ALB |
| 2.5 TDi | 7LAA | D | 2460 | BAC | M | | TSW | 01/03 ▸ | 7L6121253A | **734740** | 710 551 | ALB |
| 2.5 TDi | 7LAA | D | 2460 | BAC,BLK,BPD,BPE | A | + | | 01/03 ▸ 11/06 | 7L6121253C | **734739** | 710 551 | ALB |
| 2.5 TDi | 7LAA | D | 2460 | BAC | A | | TSW | 01/03 ▸ | 7L6121253A | **734740** | 710 551 | ALB |
| 3.0 TDi V6 | 7LAA | D | 2967 | BKS | M | + | TSW | 11/04 ▸ 11/06 | 7L0121253A | **734741** | 710 551 | ALB |
| 3.0 TDi V6 | 7LAA | D | 2967 | BKS | A | +/- | TSW | 11/05 ▸ 11/06 | 7L0121253A | **734741** | 710 551 | ALB |
| 3.0 TDi V6 | 7LAA | D | 2967 | BKS | A | + | TSW | 11/04 ▸ 11/06 | 7L0121253A | **734741** | 710 551 | ALB |
| 5.0 TDi V10 | 7LAA | D | 4921 | AYH | A | + | TSW | 11/02 ▸ 11/06 | 7L6121253E | **734740** | 710 551 | ALB |
| 5.0 TDi V10 | 7LA/A/E | D | 4921 | AYH | A | + | TSW | 11/02 ▸ | 7L6121253A | **734740** | 710 551 | ALB |
| 5.0 TDi V10 | 7LA/A/E | D | 4921 | BLE | A | + | TSW | 11/04 ▸ 11/06 | 7L0121253A | **734741** | 710 551 | ALB |
| 5.0 TDi V10 | 7LAA | D | 4921 | AYH | A | | | 11/02 ▸ | 7L6121253 | **734739** | 710 551 | ALB |
| 5.0 TDi V10 | 7LAE | D | 4921 | AYH | A | | TSW | 11/03 ▸ 11/06 | 7L6121253E | **734740** | 710 551 | ALB |

## TOUAREG II (2006>2010)

| | | | | | | | | | | | | |
|---|---|---|---|---|---|---|---|---|---|---|---|---|
| 3.6 FSi V6 24V | 7L6/0/5 | E | 3597 | BHK | A | +/- | TSW | 12/06 ▸ 05/10 | 7L0121253A | **734741** | 710 551 | ALB |
| 4.2 FSi V8 32V | 7L6/0/5/6 | E | 4163 | BAR | A | +/- | TSW | 12/06 ▸ 05/10 | 7L0121253A | **734741** | 710 551 | ALB |
| 6.0 i W12 48V | 7L60 | E | 5998 | BJN,CFRA | A | +/- | TSW | 12/06 ▸ 05/10 | 7L6121253E | **734740** | 710 551 | ALB |
| 2.5 TDi | 7L60 | D | 2460 | BPD,BPE | M | +/- | | 12/06 ▸ 05/10 | 7L6121253C | **734739** | 710 551 | ALB |
| 2.5 TDi | 7L60 | D | 2460 | BPD,BPE | A | +/- | | 12/06 ▸ 05/10 | 7L6121253C | **734739** | 710 551 | ALB |
| 3.0 TDi V6 24V | 7L60 | D | 2967 | BKS,CASC/F | M | +/- | TSW | 12/06 ▸ 05/10 | 7L0121253A | **734741** | 710 551 | ALB |
| 3.0 TDi V6 24V | 7L60 | D | 2967 | BKS,BUN,CASA/F,CASB/F,CATA/F | A | +/- | TSW | 12/06 ▸ 05/10 | 7L0121253A | **734741** | 710 551 | ALB |
| 5.0 TDi V10 20V | 7L6/0/4/8 | D | 4921 | BLE,CBWA/F | A | +/- | TSW | 12/06 ▸ 05/10 | 7L0121253A | **734741** | 710 551 | ALB |

## TOURAN (2003>2006)

| | | | | | | | | | | | | |
|---|---|---|---|---|---|---|---|---|---|---|---|---|
| 2.0 i | 1T1/C/G/H/T | F | 1984 | BSX | M | +/- | TSW | 02/06 ▸ 11/06 | 1K0121251BQ | **734335** | 640 414,5 | ALM |
| 2.0 i | 1T1/C/G/H/T | F | 1984 | BSX | M | +/- | TSW | 02/06 ▸ 11/06 | 1K0121251P | **734332** | 640 414,5 | ALM |
| 2.0 i | 1T1/C/T | F | 1984 | BSX | M | +/- | TSW | 02/06 ▸ 11/06 | 1K0121251BR | **734335** | 640 414,5 | ALM |
| 2.0 i | 1T1/G/H | F | 1984 | BSX | M | + | TSW | 02/06 ▸ 11/06 | 1K0121251BR | **734335** | 640 414,5 | ALM |
| 2.0 i | 1T1/C/G/H/T | F | 1984 | BSX | M | + | TSW | 02/06 ▸ 11/06 | 1K0121251F | **734335** | 640 414,5 | ALM |
| 2.0 i | 1T1/C/G/H/T | F | 1984 | BSX | M | | TSW | 02/06 ▸ 11/06 | 1K0121251P | **734332** | 640 414,5 | ALM |
| 1.4 TSi 16V | 1T1/C/G/H/T | E | 1390 | BMY | M | +/- | TSW | 02/06 ▸ 11/06 | 1K0121253AA | **732872** | 650 414,5 | ALM |
| 1.4 TSi 16V | 1T1/C/G/H/T | E | 1390 | BMY | M | + | | 02/06 ▸ 11/06 | 5K0121251J | | | |
| 1.6 i | 1T1/B/C/G/T | E | 1595 | BGU,BSE,BSF | M | +/- | TSW | 07/03 ▸ 11/06 | 1K0121251BR | **734335** | 640 414,5 | ALM |
| 1.6 i | 1T1/B/C/G/T | E | 1595 | BGU,BSE,BSF | M | +/- | TSW | 07/03 ▸ | 1K0121251BQ | **734335** | 640 414,5 | ALM |
| 1.6 i | 1T1/B/C/G/T | E | 1595 | BGU,BSE,BSF | M | +/- | TSW | 07/03 ▸ | 1K0121251P | **734332** | 640 414,5 | ALM |
| 1.6 i | 1T1/B/C/T | E | 1595 | BGU | M | + | TSW | 07/03 ▸ 05/05 | 1K0121251CJ | **735120** | 650 414,5 | ALM |
| 1.6 i | 1T1/C/G/T | E | 1595 | BSE,BSF | M | + | TSW | 06/05 ▸ 11/06 | 1K0121251BR | **734335** | 640 414,5 | ALM |
| 1.6 i | 1T1/B/G/T | E | 1595 | BGU,BSE,BSF | M | | TSW | 07/03 ▸ 11/06 | 1K0121251P | **734332** | 640 414,5 | ALM |
| 1.6 i | 1T1G | E | 1595 | BSE,BSF | M | | TSW | 06/05 ▸ 11/06 | 1K0121251F | **734335** | 640 414,5 | ALM |
| 1.6 FSi 16V | 1T1/B/C/F/G/H/T | E | 1598 | BAG,BLF,BLP | M | +/- | TSW | 02/03 ▸ 11/06 | 1K0121251BR | **734335** | 640 414,5 | ALM |
| 1.6 FSi 16V | 1T1/B/C/F/G/H/T | E | 1598 | BAG,BLF,BLP | M | +/- | TSW | 02/03 ▸ | 1K0121251P | **734332** | 640 414,5 | ALM |
| 1.6 FSi 16V | 1T1/B/C/F/G/H/T | E | 1598 | BAG,BLF,BLP | M | +/- | TSW | 02/03 ▸ | 1K0121251BQ | **734335** | 640 414,5 | ALM |
| 1.6 FSi 16V | 1T1/B/C/F/G/H/T | E | 1598 | BAG,BLF,BLP | M | + | TSW | 02/03 ▸ 11/06 | 1K0121251AR | **735120** | 650 414,5 | ALM |
| 1.6 FSi 16V | 1T1/G/H/T | E | 1598 | BLF | M | + | TSW | 10/06 ▸ 11/06 | 1K0121251F | **734335** | 640 414,5 | ALM |
| 1.6 FSi 16V | 1T1G | E | 1598 | BLF | M | + | TSW | 10/06 ▸ 11/06 | 1K0121251BR | **734335** | 640 414,5 | ALM |
| 1.6 FSi 16V | 1T1/B/F/G/H/T | E | 1598 | BAG,BLF | M | | TSW | 02/03 ▸ 11/06 | 1K0121251P | **734332** | 640 414,5 | ALM |
| 1.6 FSi 16V | 1T1/G/H | E | 1598 | BLF | M | | TSW | 02/05 ▸ 11/06 | 1K0121251AR | **735120** | 650 414,5 | ALM |
| 1.6 FSi 16V | 1T1/B/C/F/G/H/T | E | 1598 | BAG,BLF,BLP | A | +/- | TSW | 02/03 ▸ | 1K0121251P | **734332** | 640 414,5 | ALM |
| 1.6 FSi 16V | 1T1/B/C/F/G/H/T | E | 1598 | BAG,BLF,BLP | A | +/- | TSW | 02/03 ▸ | 1K0121251BQ | **734335** | 640 414,5 | ALM |
| 1.6 FSi 16V | 1T1/B/C/F/G/H/T | E | 1598 | BAG,BLF,BLP | A | +/- | TSW | 02/03 ▸ 11/06 | 1K0121251BR | **734335** | 640 414,5 | ALM |
| 1.6 FSi 16V | 1T1/B/C/F/G/H/T | E | 1598 | BAG,BLF,BLP | A | + | TSW | 02/03 ▸ 10/06 | 1K0121251AR | **735120** | 650 414,5 | ALM |
| 1.6 FSi 16V | 1T1H | E | 1598 | BLF | A | + | TSW | 02/05 ▸ 11/06 | 1K0121251BR | **734335** | 640 414,5 | ALM |
| 1.6 FSi 16V | 1T1/G/H/T | E | 1598 | BLF | A | + | TSW | 10/06 ▸ 11/06 | 1K0121251F | **734335** | 640 414,5 | ALM |
| 1.6 FSi 16V | 1T1/G/H/T | E | 1598 | BLF | A | | TSW | 02/05 ▸ 11/06 | 1K0121251AR | **735120** | 650 414,5 | ALM |
| 2.0 FSi 16V | 1T1/G/H/T | E | 1984 | BLX,BLY,BVY,BVZ | M | +/- | TSW | 05/04 ▸ 11/06 | 1K0121251AR | **735120** | 650 414,5 | ALM |
| 2.0 FSi 16V | 1T1/H/T | E | 1984 | AXW | M | + | TSW | 10/03 ▸ | 1K0121251E | **734335** | 640 414,5 | ALM |
| 2.0 FSi 16V | 1T1/H/T | E | 1984 | AXW | M | + | TSW | 10/03 ▸ | 1K0121251AR | **735120** | 650 414,5 | ALM |
| 2.0 FSi 16V | 1T1/H/T | E | 1984 | AXW | M | + | TSW | 10/03 ▸ 05/04 | 1K0121251CJ | **735120** | 650 414,5 | ALM |
| 2.0 FSi 16V | 1T1/H/T | E | 1984 | AXW | M | - | TSW | 10/03 ▸ | 1K0121251F | **734335** | 640 414,5 | ALM |
| 2.0 FSi 16V | 1T1/H/T | E | 1984 | AXW | M | - | TSW | 10/03 ▸ 05/04 | 1K0121251BR | **734335** | 640 414,5 | ALM |
| 2.0 FSi 16V | 1T1/G/H/T | E | 1984 | AXW,BLX,BLY,BVY,BVZ | M | | TSW | 10/03 ▸ 11/06 | 1K0121251AR | **735120** | 650 414,5 | ALM |
| 2.0 FSi 16V | 1T1/G/H/T | E | 1984 | BLR,BLX,BLY,BVY,BVZ | A | +/- | TSW | 05/04 ▸ 11/06 | 1K0121251AR | **735120** | 650 414,5 | ALM |
| 2.0 FSi 16V | 1T1/H/T | E | 1984 | AXW | A | + | TSW | 10/03 ▸ | 1K0121251AR | **735120** | 650 414,5 | ALM |
| 2.0 FSi 16V | 1T1/H/T | E | 1984 | AXW | A | + | TSW | 10/03 ▸ | 1K0121251E | **734335** | 640 414,5 | ALM |
| 2.0 FSi 16V | 1T1/H/T | E | 1984 | AXW | A | + | TSW | 10/03 ▸ 05/04 | 1K0121251CJ | **735120** | 650 414,5 | ALM |

# VOLKSWAGEN (.../...)

## TOURAN (2003>2006) (.../...)

| | | | CC | | | AC | | | OE | Valeo | DIM. | TECH |
|---|---|---|---|---|---|---|---|---|---|---|---|---|
| 2.0 FSi 16V | 1T1/H/T | E | 1984 | AXW | A | - | TSW | 10/03 ▸ 05/04 | 1K0121251BR | **734335** | 640 414,5 | ALM |
| 2.0 FSi 16V | 1T1/H/T | E | 1984 | AXW | A | - | TSW | 10/03 ▸ | 1K0121251F | **734335** | 640 414,5 | ALM |
| 2.0 FSi 16V | 1T1/G/H/T | E | 1984 | AXW,BLR,BLX,BLY,BVY,BVZ | A | | TSW | 10/03 ▸ 11/06 | 1K0121251AR | **735120** | 650 414,5 | ALM |
| 1.9 TDi | 1T1T | D | 1896 | AVQ | M | +/- | TSW | 02/03 ▸ | 1K0121253H | **732872** | 650 414,5 | ALM |
| 1.9 TDi | 1T1/B/C/G/H/T | D | 1896 | AVQ,BKC,BRU,BXE,BXF | M | +/- | TSW | 02/03 ▸ 11/06 | 1K0121253AA | **732872** | 650 414,5 | ALM |
| 1.9 TDi | 1T1/B/C/F/G/H/T | D | 1896 | AVQ,BKC,BRU,BXE,BXF | M | + | | 02/03 ▸ 11/06 | 1K0121251L | | | |
| 1.9 TDi | 1T1/C/G/H/T | D | 1896 | BLS,BXJ | M | + | | 06/05 ▸ 11/06 | 1K0121251AL | | 650 451 | ALM |
| 1.9 TDi | 1T1/B/F/H | D | 1896 | AVQ | M | | TSW | 02/03 ▸ 05/04 | 1K0121253AA | **732872** | 650 414,5 | ALM |
| 1.9 TDi | 1T1/B/F/H | D | 1896 | AVQ | M | | TSW | 03/03 ▸ | 1K0121253H | **732872** | 650 414,5 | ALM |
| 1.9 TDi | 1T1/C/G/T | D | 1896 | BKC | A | +/- | TSW | 08/03 ▸ 02/06 | 1K0121253AA | **732872** | 650 414,5 | ALM |
| 1.9 TDi | 1T1T | D | 1896 | BKC | A | +/- | TSW | 09/03 ▸ | 1K0121253H | **732872** | 650 414,5 | ALM |
| 1.9 TDi | 1T1/B/C/G/H/T | D | 1896 | BKC | A | + | | 08/03 ▸ 02/06 | 1K0121251L | | | |
| 1.9 TDi | 1T1/C/G/H/T | D | 1896 | BLS | A | + | | 06/05 ▸ 11/06 | 1K0121251AL | | 650 451 | ALM |
| 1.9 TDi | 1T1/B/H/T | D | 1896 | BKC | A | - | TSW | 08/03 ▸ | 1K0121253H | **732872** | 650 414,5 | ALM |
| 1.9 TDi | 1T1/B/H/T | D | 1896 | BKC | A | - | TSW | 08/03 ▸ 02/06 | 1K0121253AA | **732872** | 650 414,5 | ALM |
| 1.9 TDi | 1T1/C/G/H/T | D | 1896 | BLS | A | | | 06/05 ▸ 11/06 | 1K0121251AL | | 650 451 | ALM |
| 2.0 TDi 16V | 1T1/G/H/T | D | 1968 | AZV,BKD | M | +/- | Air Seal | 08/03 ▸ 11/06 | 1K0121251N | **734333** | 650 454,3 | ALB |
| 2.0 TDi 16V | 1T1/G/H/T | D | 1968 | AZV,BKD,BMN | M | +/- | Air Seal | 08/03 ▸ 11/06 | 1K0121251DM | **734333** | 650 454,3 | ALB |
| 2.0 TDi 16V | 1T1/G/H/T | D | 1968 | BMN | M | +/- | Air Seal | 12/05 ▸ 11/06 | 1K0121251AB | **734333** | 650 454,3 | ALB |
| 2.0 TDi | 1T1/G/H/T | D | 1968 | BMM/F | M | +/- | | 12/05 ▸ 11/06 | 1K0121251AL | | 650 451 | ALM |
| 2.0 TDi 16V | 1T1T | D | 1968 | AZV | M | - | Air Seal | 02/03 ▸ | 1K0121251BK | **734333** | 650 454,3 | ALB |
| 2.0 TDi 16V | 1T1T | D | 1968 | AZV | M | - | Air Seal | 02/03 ▸ 11/06 | 1K0121251DM | **734333** | 650 454,3 | ALB |
| 2.0 TDi 16V | 1T1/F/G/H/T | D | 1968 | AZV,BKD | M | | Air Seal | 02/03 ▸ | 1K0121251N | **734333** | 650 454,3 | ALB |
| 2.0 TDi 16V | 1T1/F/H | D | 1968 | AZV | M | | Air Seal | 03/03 ▸ | 1K0121251BK | **734333** | 650 454,3 | ALB |
| 2.0 TDi 16V | 1T1/F/H | D | 1968 | AZV | M | | Air Seal | 03/03 ▸ 11/06 | 1K0121251DM | **734333** | 650 454,3 | ALB |
| 2.0 TDi | 1T1/G/H | D | 1968 | BMM/F | M | | | 12/05 ▸ 11/06 | 1K0121251AL | | 650 451 | ALM |
| 2.0 TDi 16V | 1T1/G/H/T | D | 1968 | BKD | A | +/- | Air Seal | 08/03 ▸ | 1K0121251N | **734333** | 650 454,3 | ALB |
| 2.0 TDi 16V | 1T1/G/H/T | D | 1968 | BKD,BMN | A | +/- | Air Seal | 08/03 ▸ 11/06 | 1K0121251DM | **734333** | 650 454,3 | ALB |
| 2.0 TDi | 1T1/G/H/T | D | 1968 | BMM/F | A | +/- | | 12/05 ▸ 11/06 | 1K0121251AL | | 650 451 | ALM |
| 2.0 TDi | 1T1/G/H/T | D | 1968 | BMM/F | A | +/- | TSW | 12/05 ▸ 11/06 | 1K0121251AN | **735120** | 650 414,5 | ALM |
| 2.0 TDi 16V | 1T1/G/H/T | D | 1968 | BMN | A | +/- | Air Seal | 12/05 ▸ 11/06 | 1K0121251AB | **734333** | 650 454,3 | ALB |
| 2.0 TDi 16V | 1T1/H/T | D | 1968 | BKD | A | - | Air Seal | 08/03 ▸ | 1K0121251BK | **734333** | 650 454,3 | ALB |
| 2.0 TDi 16V | 1T1/H/T | D | 1968 | BKD | A | - | Air Seal | 08/03 ▸ 05/04 | 1K0121251DM | **734333** | 650 454,3 | ALB |
| 2.0 TDi 16V | 1T1/G/H/T | D | 1968 | BKD | A | | Air Seal | 08/03 ▸ 11/06 | 1K0121251N | **734333** | 650 454,3 | ALB |
| 2.0 TDi | 1T1/G/H | D | 1968 | BMM/F | A | | TSW | 12/05 ▸ 11/06 | 1K0121251AN | **735120** | 650 414,5 | ALM |

## TOURAN (2006>2010)

| | | | | | | | | | | | | |
|---|---|---|---|---|---|---|---|---|---|---|---|---|
| 1.4 TSI CNG 150 | 1T2/A/C/H/T | F | 1390 | CDGA | M | | TSW | 05/09 ▸ 05/10 | 1K0121253AA | **732872** | 650 414,5 | ALM |
| 1.4 TSI CNG 150 | 1T2/A/C/H/T | F | 1390 | CDGA | A | | TSW | 05/09 ▸ 05/10 | 1K0121253AA | **732872** | 650 414,5 | ALM |
| 2.0 i | 1T2/C/H/T | F | 1984 | BSX | M | +/- | TSW | 11/06 ▸ | 1K0121251BQ | **734335** | 640 414,5 | ALM |
| 2.0 i | 1T2/C/H/T | F | 1984 | BSX | M | +/- | TSW | 11/06 ▸ 05/09 | 1K0121251BR | **734335** | 640 414,5 | ALM |
| 2.0 i | 1T2/C/H/T | F | 1984 | BSX | M | + | TSW | 11/06 ▸ 05/09 | 1K0121251BR | **734335** | 640 414,5 | ALM |
| 2.0 i | 1T2/C/H/T | F | 1984 | BSX | M | | TSW | 11/06 ▸ 05/09 | 1K0121251F | **734335** | 640 414,5 | ALM |
| 2.0 i | 1T2/C/H/T | F | 1984 | BSX | M | | TSW | 11/06 ▸ 05/09 | 1K0121251P | **734332** | 640 414,5 | ALM |
| 1.4 TSi | 1T2/A/C/H/T | E | 1390 | BMY | M | +/- | TSW | 11/06 ▸ | 1K0121253H | **732872** | 650 414,5 | ALM |
| 1.4 TSi | 1T2/A/C/H/T | E | 1390 | BMY | M | +/- | TSW | 11/06 ▸ 11/08 | 1K0121253AA | **732872** | 650 414,5 | ALM |
| 1.4 TSi | 1T2/A/C/H/T | E | 1390 | CAVC | M | | TSW | 11/08 ▸ 05/10 | 1K0121253AA | **732872** | 650 414,5 | ALM |
| 1.4 TSi | 1T2/A/C/H/T | E | 1390 | BMY | A | +/- | TSW | 11/06 ▸ 12/08 | 1K0121253AA | **732872** | 650 414,5 | ALM |
| 1.4 TSi | 1T2/A/C/H/T | E | 1390 | CAVB,CAVC | A | | TSW | 11/08 ▸ 05/10 | 1K0121253AA | **732872** | 650 414,5 | ALM |
| 1.6 i | 1T2/C/T | E | 1595 | BSE,BSF | M | +/- | TSW | 11/06 ▸ 05/10 | 1K0121251BR | **734335** | 640 414,5 | ALM |
| 1.6 i | 1T2/C/T | E | 1595 | BSE,BSF | M | +/- | TSW | 11/06 ▸ | 1K0121251BQ | **734335** | 640 414,5 | ALM |
| 1.6 i | 1T2/C/T | E | 1595 | BSE,BSF | M | +/- | TSW | 11/06 ▸ | 1K0121251P | **734332** | 640 414,5 | ALM |
| 1.6 i | 1T2/A/C/T | E | 1595 | BSE,BSF | M | + | TSW | 11/06 ▸ 05/10 | 1K0121251BR | **734335** | 640 414,5 | ALM |
| 1.6 i | 1T2/A/C/T | E | 1595 | BSE,BSF | M | + | TSW | 11/06 ▸ | 1K0121251BQ | **734335** | 640 414,5 | ALM |
| 1.6 i | 1T2/A/C/T | E | 1595 | BSE,BSF | M | + | TSW | 11/06 ▸ | 1K0121251P | **734332** | 640 414,5 | ALM |
| 1.6 i | 1T2/A/C/T | E | 1595 | BSE | M | + | TSW | 11/06 ▸ | 1K0121251F | **734335** | 640 414,5 | ALM |
| 1.6 i | 1T2/A/C/T | E | 1595 | BSE,BSF | M | | TSW | 11/06 ▸ 05/10 | 1K0121251F | **734335** | 640 414,5 | ALM |
| 1.6 i | 1T2/A/C/T | E | 1595 | BSE,BSF | M | | TSW | 11/06 ▸ 05/10 | 1K0121251P | **734332** | 640 414,5 | ALM |
| 1.6 FSi | 1T2A | E | 1598 | BLF | M | +/- | TSW | 11/06 ▸ 01/07 | 1K0121251P | **734332** | 640 414,5 | ALM |
| 1.6 FSi | 1T2A | E | 1598 | BLF | M | +/- | TSW | 11/06 ▸ 01/07 | 1K0121251BR | **734335** | 640 414,5 | ALM |
| 1.6 FSi | 1T2H | E | 1598 | BLF | A | +/- | TSW | 11/06 ▸ | 1K0121251BQ | **734335** | 640 414,5 | ALM |
| 1.6 FSi | 1T2H | E | 1598 | BLF | A | +/- | TSW | 11/06 ▸ | 1K0121251P | **734332** | 640 414,5 | ALM |
| 1.6 FSi | 1T2H | E | 1598 | BLF | A | +/- | TSW | 11/06 ▸ 01/07 | 1K0121251BR | **734335** | 640 414,5 | ALM |
| 1.6 FSi | 1T2H | E | 1598 | BLF | A | | TSW | 11/06 ▸ 01/07 | 1K0121251F | **734335** | 640 414,5 | ALM |
| 1.6 FSi | 1T2H | E | 1598 | BLF | A | | TSW | 11/06 ▸ 01/07 | 1K0121251P | **734332** | 640 414,5 | ALM |
| 2.0 FSi | 1T2/G/H/T | E | 1984 | BVY,BVZ | M | +/- | TSW | 11/06 ▸ 01/07 | 1K0121251AR | **735120** | 650 414,5 | ALM |
| 2.0 FSi | 1THT ; 1T2/G/H/T | E | 1984 | BVY,BVZ | A | +/- | TSW | 11/06 ▸ 01/07 | 1K0121251AR | **735120** | 650 414,5 | ALM |
| 1.9 TDi | 1T2/A/C/H/T | D | 1896 | BXE,BXF | M | +/- | TSW | 11/06 ▸ 05/10 | 1K0121253AA | **732872** | 650 414,5 | ALM |
| 1.9 TDi | 1T2/C/H/T | D | 1896 | BLS | A | +/- | TSW | 11/06 ▸ | 1K0121251BQ | **734335** | 640 414,5 | ALM |
| 1.9 TDi | 1T2/C/H/T | D | 1896 | BLS | A | +/- | TSW | 11/06 ▸ | 1K0121251P | **734332** | 640 414,5 | ALM |

Radiator Radiateur Motorkühler Radiatore di raffreddamento Radiator Radyatör Radiator Радиатор vízhűtő Vodní chladič Radiator Ψυγείο



• **New** Nouveau **Nuevo** Novo **Nuovo** Nieuw **Neu** Nowość **Yeni** Новый Νέο **Novy**

## TOURAN (2006>2010) (.../...)

| | | | CC | | | AC | | | | Valeo | DIM. | TECH |
|---|---|---|---|---|---|---|---|---|---|---|---|---|
| 1.9 TDi | 1T2/C/H/T | D | 1896 | BLS | A | +/- | TSW | 11/06 ▸ 05/10 | 1K0121251BR | **734335** | 640 414,5 | ALM |
| 1.9 TDi | 1T2/A/C/H/T | D | 1896 | BLS | A | + | TSW | 11/06 ▸ | 1K0121251AN | **735120** | 650 414,5 | ALM |
| 1.9 TDi | 1T2/A/C/H/T | D | 1896 | BLS | A | | TSW | 11/06 ▸ 05/10 | 1K0121251AN | **735120** | 650 414,5 | ALM |
| 2.0 TDi | 1T2/A/H | D | 1968 | BMN | M | +/- | Air Seal | 11/06 ▸ 05/10 | 1K0121251AB | **734333** | 650 454,3 | ALB |
| 2.0 TDi | 1T2/A/H/T | D | 1968 | AZV,BKD | M | +/- | Air Seal | 11/06 ▸ | 1K0121251BK | **734333** | 650 454,3 | ALB |
| 2.0 TDi | 1T2/A/H/T | D | 1968 | AZV,BKD,BMN | M | +/- | Air Seal | 11/06 ▸ 05/10 | 1K0121251DM | **734333** | 650 454,3 | ALB |
| 2.0 TDi | 1T2/A/H/T | D | 1968 | BMM/F | M | + | TSW | 11/06 ▸ | 1K0121251AN | **735120** | 650 414,5 | ALM |
| 2.0 TDi | 1T2/A/H/T | D | 1968 | AZV,BKD | M | | Air Seal | 11/06 ▸ 05/10 | 1K0121251N | **734333** | 650 454,3 | ALB |
| 2.0 TDi | 1T2/A/H/T | D | 1968 | BKD,BMN | A | +/- | Air Seal | 11/06 ▸ 05/10 | 1K0121251DM | **734333** | 650 454,3 | ALB |
| 2.0 TDi | 1T2/A/H/T | D | 1968 | BKD | A | +/- | Air Seal | 11/06 ▸ | 1K0121251BK | **734333** | 650 454,3 | ALB |
| 2.0 TDi | 1T2/A/H | D | 1968 | BMN | A | +/- | Air Seal | 11/06 ▸ 05/10 | 1K0121251AB | **734333** | 650 454,3 | ALB |
| 2.0 TDi | 1T2/A/H/T | D | 1968 | BMM/F | A | + | TSW | 11/06 ▸ | 1K0121251AN | **735120** | 650 414,5 | ALM |
| 2.0 TDi | 1T2/A/H/T | D | 1968 | BMM/F | A | | TSW | 11/06 ▸ 05/10 | 1K0121251AN | **735120** | 650 414,5 | ALM |
| 2.0 TDi | 1T2/A/H/T | D | 1968 | BKD | A | | Air Seal | 11/06 ▸ 05/10 | 1K0121251N | **734333** | 650 454,3 | ALB |

## TOURAN (2010>)

| | | | | | | | | | | | | |
|---|---|---|---|---|---|---|---|---|---|---|---|---|
| 1.4 TSI CNG 150 16V | 1T3/2/3/4/C | F | 1390 | CDGA | M | +/- | TSW | 05/10 ▸ | 1K0121253AA | **732872** | 650 414,5 | ALM |
| 1.4 TSI CNG 150 16V | 1T3/2/3/4/C | F | 1390 | CDGA | A | +/- | TSW | 05/10 ▸ | 1K0121253AA | **732872** | 650 414,5 | ALM |
| 1.2 TSi | 1T3/2/3/4 | E | 1197 | CBZB | M | +/- | | 05/10 ▸ | 1K0121251CL | **•735280** | 451,5 650 | ALM |
| 1.2 TSi | 1T3/2/3/4 | E | 1197 | CBZB | M | +/- | | 05/10 ▸ | 1K0121251BN | **735179** | | |
| 1.4 TSi 16V | 1T3/2/3/4/C | E | 1390 | CAVC | M | +/- | TSW | 05/10 ▸ | 1K0121253AA | **732872** | 650 414,5 | ALM |
| 1.4 TSi 16V | 1T3/2/3/4/C | E | 1390 | CAVB,CAVC | A | +/- | TSW | 05/10 ▸ | 1K0121253AA | **732872** | 650 414,5 | ALM |
| 1.6 TDI 16V | 1T3/2/3/4/C | D | 1598 | CAYB/F,CAYC/F | M | +/- | Air Seal | 05/10 ▸ | 1K0121251DM | **734333** | 650 454,3 | ALB |
| 1.6 TDI 16V | 1T3/2/3/4/C | D | 1598 | CAYC/F | A | +/- | Air Seal | 05/10 ▸ | 1K0121251DM | **734333** | 650 454,3 | ALB |
| 2.0 TDI 16V | 1T3/2/3/4/C | D | 1968 | CFHC/F,CLCA/F | M | +/- | Air Seal | 05/10 ▸ | 1K0121251DM | **734333** | 650 454,3 | ALB |
| 1.6 TDI 16V,2.0 TDI 16V | 1T3/2/3/4/C | D | 1968 | CFHC/F,CFJA/F,CLCA/F | A | +/- | Air Seal | 05/10 ▸ | 1K0121251DM | **734333** | 650 454,3 | ALB |

## UP 1.0 SRE 60

| | | | | | | | | | | | | |
|---|---|---|---|---|---|---|---|---|---|---|---|---|
| 1,0 MPI | 1212A1 | E | 999 | EA211 | M | +/- | TSW | 07/11 ▸ | 1S0121253P | **•735469** | 356 359 | ALM |
| 1,0 MPI | 1212A1 | E | 999 | EA211 | M | +/- | Plug + | 07/11 ▸ | 1S0121253T | **•735469** | 356 359 | ALM |

## UP 1.0 SRE 75

| | | | | | | | | | | | | |
|---|---|---|---|---|---|---|---|---|---|---|---|---|
| 1,0 MPI | 1212D1 | E | 999 | EA211 | M | +/- | TSW | 07/11 ▸ | 1S0121253P | **•735469** | 356 359 | ALM |
| 1,0 MPI | 1212D1 | E | 999 | EA211 | M | +/- | Plug + | 07/11 ▸ | 1S0121253T | **•735469** | 356 359 | ALM |

## VENTO

| | | | | | | | | | | | | |
|---|---|---|---|---|---|---|---|---|---|---|---|---|
| 1.4 i | 1H2/2/3/B | E | 1390 | AEX | M | - | TSW | 07/95 ▸ 12/97 | 6N0121253B | **730503** | 430 322 | ALM |
| 1.4 i | 1H2/2/3 | E | 1391 | ABD | M | - | TSW | 11/91 ▸ 07/95 | 6N0121253B | **730503** | 430 322 | ALM |
| 1.4 i | 1H2/2/3 | E | 1391 | ABD | M | | TSW | 11/91 ▸ 07/95 | 6N0121253A | **730503** | 430 322 | ALM |
| 1.4 i | 1H2/2/3 | E | 1391 | ABD | M | | TSW | 11/91 ▸ 07/95 | 6N0121253 | **730504** | 525 322 | ALM |
| 1.6 i | 1H2/2/3/4/5/B | E | 1598 | AEK,AFT,AKS | M | + | TSW | 10/94 ▸ 12/97 | 1H0121253BA | **731032** | 628 377.5 | ALM |
| 1.6 i | 1H2/2/3 | E | 1598 | ABU,AEA,AEE | M | - | TSW | 07/92 ▸ 12/97 | 6N0121253B | **730503** | 430 322 | ALM |
| 1.6 i | 1H2/2/3/4/5/B | E | 1598 | AEK,AFT | M | - | TSW | 10/94 ▸ 12/97 | 1H0121253D | **731025** | 628 322 | ALM |
| 1.6 i | 1H2/2/3 | E | 1598 | ABU | M | | TSW | 07/92 ▸ 06/94 | 6N0121253J | **730504** | 525 322 | ALM |
| 1.6 i | 1H2/2/3 | E | 1598 | ABU,AEA | M | | TSW | 07/92 ▸ 07/95 | 6N0121253A | **730503** | 430 322 | ALM |
| 1.6 i | 1H2/2/3/4/B | E | 1598 | AEK,AFT | A | + | TSW | 10/94 ▸ 12/97 | 1H0121253BA | **731032** | 628 377.5 | ALM |
| 1.6 i | 1H2/2/3 | E | 1598 | AEK | A | - | TSW | 10/94 ▸ 12/95 | 1H0121253H | **731025** | 628 322 | ALM |
| 1.6 i | 1H2/2/3/4/B | E | 1598 | AFT | A | - | TSW | 12/95 ▸ 12/97 | 1H0121253D | **731025** | 628 322 | ALM |
| 1.8 i | 1H33 ; 1H2/2/3/4/5 | E | 1781 | AAM,ABS,ADZ | M | + | TSW | 11/91 ▸ 12/97 | 1H0121253BA | **731032** | 628 377.5 | ALM |
| 1.8 i | 1H33 ; 1H2/2/3/4/5 | E | 1781 | AAM,ABS,ADZ | M | - | TSW | 11/91 ▸ 12/97 | 1H0121253R | **730505** | 525 322 | ALM |
| 1.8 i | 1H2/2/3/4 | E | 1781 | AAM,ABS,ADZ | A | + | TSW | 01/92 ▸ 12/97 | 1H0121253BA | **731032** | 628 377.5 | ALM |
| 1.8 i | 1H2/2/3/4 | E | 1781 | AAM,ABS,ADZ | A | - | TSW | 01/92 ▸ 12/97 | 1H0121253H | **731025** | 628 322 | ALM |
| 2.0 E | 1H2/2/3/4/5 | E | 1984 | 2E,ADY,AEP,AGG,AKR | M | + | TSW | 11/91 ▸ 12/97 | 1H0121253BA | **731032** | 628 377.5 | ALM |
| 2.0 E | 1H2/2/3/4/5 | E | 1984 | 2E,ADY,AEP,AGG,AKR | M | - | TSW | 11/91 ▸ 12/97 | 1H0121253D | **731025** | 628 322 | ALM |
| 2.0 E | 1H2/2/3/4 | E | 1984 | 2E,ADY,AEP,AGG | A | + | TSW | 11/91 ▸ 12/97 | 1H0121253BA | **731032** | 628 377.5 | ALM |
| 2.0 E | 1H2/2/3/4 | E | 1984 | 2E,ADY,AEP,AGG | A | - | TSW | 11/91 ▸ 12/97 | 1H0121253H | **731025** | 628 322 | ALM |
| 2.0 E | 1H2/2/3/4 | E | 1984 | AGG | A | - | TSW | 10/94 ▸ 12/97 | 1H0121253D | **731025** | 628 322 | ALM |
| 2.8 i VR6 | 1H2/5/7 | E | 2792 | AAA | M | + | TSW | 01/92 ▸ 12/97 | 1H0121253CB | **731267** | 628 377,5 | ALM |
| 2.8 i VR6 | 1H2/5/7 | E | 2792 | AAA | M | | TSW | 01/92 ▸ 12/97 | 1H0121253BE | **730955** | 628 377,5 | ALM |
| 2.8 i,2.8 i VR6 | 1H2/5/7 | E | 2792 | AAA | A | +/- | TSW | 07/92 ▸ 12/97 | 1H0121253CB | **731267** | 628 377,5 | ALM |
| 2.8 i,2.8 i VR6 | 1H2/5/7 | E | 2792 | AAA | A | | TSW | 07/92 ▸ 12/97 | 1H0121253BE | **730955** | 628 377,5 | ALM |
| 1.9 TDi | 1H2/2/3/4/5/B | D | 1896 | 1Z,AFN,AHU,ALE | M | + | TSW | 08/93 ▸ 12/97 | 1H0121253BA | **731032** | 628 377.5 | ALM |
| 1.9 D,1.9 TD,1.9 TDi | 1H2/2/3/4/5 | D | 1896 | 1Y,AAZ,AFN | M | - | TSW | 11/91 ▸ 12/97 | 1H0121253AE | **732437** | 628 377 | ALM |
| 1.9 SDi,1.9 TDi | 1H2/2/3/4/5/B | D | 1896 | 1Z,AEY,AHU,ALE | M | - | TSW | 08/93 ▸ 12/97 | 1H0121253D | **731025** | 628 322 | ALM |
| 1.9 D,1.9 TD,1.9 TDi | 1H2/2/3/4/5 | D | 1896 | 1Y,AAZ,AFN | M | | TSW | 11/91 ▸ 12/97 | 1H0121253BC | **731127** | 628 377,5 | ALM |
| 1.9 TDi | 1H2/2/3/4/B | D | 1896 | 1Z,AFN,AHU | A | + | TSW | 09/93 ▸ 12/97 | 1H0121253BA | **731032** | 628 377.5 | ALM |
| 1.9 TD,1.9 TDi | 1H2/2/3/4 | D | 1896 | AAZ,AFN | A | - | TSW | 01/92 ▸ 12/97 | 1H0121253AE | **732437** | 628 377 | ALM |
| 1.9 TDi | 1H2/2/3/4/B | D | 1896 | 1Z,AHU | A | - | TSW | 09/93 ▸ 12/97 | 1H0121253D | **731025** | 628 322 | ALM |

# VOLKSWAGEN (.../...)

## VENTO (.../...)

| | | | CC | | | AC | | | OE | Valeo | DIM. | TECH |
|---|---|---|---|---|---|---|---|---|---|---|---|---|
| 1.9 TD,1.9 TDi | 1H2/2/3/4 | D | 1896 | AAZ,AFN | A | | TSW | 01/92 ▸ 12/97 | 1H0121253BC | 731127 | 628 377,5 | ALM |

# VOLKSWAGEN

## CADDY (82>92)

| | | | CC | | | AC | | | OE | Valeo | DIM. | TECH |
|---|---|---|---|---|---|---|---|---|---|---|---|---|
| 1.5 | 147/0/7/8/9 | E | 1457 | JB | M | - | TSW | 08/82 ▸ 07/83 | 321121253AL | 883727 | 525 322 | ALM |
| 1.5 | 148/0/7/8/9 | E | 1457 | JB | M | | TSW | 08/82 ▸ 07/83 | 321121253AL | 883727 | 525 322 | ALM |
| 1.6 | 147/0/7/8 | E | 1588 | EM | M | - | TSW | 08/82 ▸ 07/83 | 321121253AL | 883727 | 525 322 | ALM |
| 1.6 | 1479 | E | 1588 | EM | M | | TSW | 08/82 ▸ 07/83 | 321121253AL | 883727 | 525 322 | ALM |
| 1.6 | 147/0/7/8 | E | 1588 | EM | A | - | TSW | 08/82 ▸ 07/83 | 321121253AL | 883727 | 525 322 | ALM |
| 1.6 | 1479 | E | 1588 | EM | A | | TSW | 08/82 ▸ 07/83 | 321121253AL | 883727 | 525 322 | ALM |
| 1.6 | 1AE1 ; 147/0/7/8/9 | E | 1595 | EW,HN | M | - | TSW | 08/83 ▸ 07/92 | 321121253AL | 883727 | 525 322 | ALM |
| 1.6 | 148/0/7/8/9 | E | 1595 | EW | M | | TSW | 08/83 ▸ 07/90 | 321121253AL | 883727 | 525 322 | ALM |
| 1.6 | 147/0/7/8 | E | 1595 | EW,HN | A | - | TSW | 08/83 ▸ 07/90 | 321121253AL | 883727 | 525 322 | ALM |
| 1.6 | 1AE1 ; 148/0/7/8 | E | 1595 | EW | A | | TSW | 08/84 ▸ 07/92 | 321121253AL | 883727 | 525 322 | ALM |
| 1.8 i | 147/0/7/8 | E | 1781 | JH | M | - | TSW | 08/85 ▸ 07/90 | 321121253AL | 883727 | 525 322 | ALM |
| 1.8 i | 1AE1 ; 148/0/7/8 | E | 1781 | JH | M | | TSW | 08/85 ▸ 07/92 | 321121253AL | 883727 | 525 322 | ALM |
| 1.8 i | 147/0/7/8 | E | 1781 | JH | A | - | TSW | 08/85 ▸ 07/90 | 321121253AL | 883727 | 525 322 | ALM |
| 1.8 i | 1AE1 ; 148/0/7/8 | E | 1781 | JH | A | | TSW | 08/85 ▸ 07/92 | 321121253AL | 883727 | 525 322 | ALM |
| 1.6 D | 1480 ; 147/0/7/8/9 | D | 1588 | JK | M | - | | 08/82 ▸ 03/90 | 171121253CL | | 525 322 | ALM |
| 1.6 D | 147/0 ; 1AE1 ; 148/0/7/8/9 | D | 1588 | JK,ME | M | | | 08/82 ▸ 07/92 | 171121253CL | | 525 322 | ALM |

## CADDY (95>2004)

| | | | CC | | | AC | | | OE | Valeo | DIM. | TECH |
|---|---|---|---|---|---|---|---|---|---|---|---|---|
| 1.4 i,1.4 i 16V | 9K9/A/B | E | 1390 | AUA,AUD | M | +/- | TSW | 09/00 ▸ 06/03 | 6K0121253AS | 732710 | 628 377,5 | ALM |
| 1.4 i | 9K9/A/B | E | 1390 | AEX | M | - | TSW | 11/95 ▸ 12/97 | 6K0121253K | 730947 | 525 322 | ALM |
| 1.4 i | 9K9/A/B | E | 1390 | AKV,APQ | M | | TSW | 11/97 ▸ 06/03 | 6K0121253K | 730947 | 525 322 | ALM |
| 1.4 i | 9K9A ▸ 9K-X-514 000 | E | 1390 | APQ | M | + | TSW | 12/97 ▸ 08/98 | 6K0121253A | 730945 | 628 322 | ALM |
| 1.6 i | 9K9/A/B | E | 1595 | 1F | M | + | TSW | 11/95 ▸ 05/97 | 1H0121253P | 731265 | 628 377,5 | ALM |
| 1.6 i | 9K9/A/B | E | 1595 | 1F | M | - | TSW | 11/95 ▸ 05/97 | 6K0121253S | 730948 | 525 322 | ALM |
| 1.6 i | 9U71 ; 9K9/A/B | E | 1598 | AEE | M | | | 06/96 ▸ 12/00 | 6U0121253 | | 590 285 | ALM |
| 1.6 i | 9K9/A/B | E | 1598 | AEE | M | | TSW | 06/97 ▸ 09/00 | 6K0121253K | 730947 | 525 322 | ALM |
| 1.7 SDi | 9K9/A/B ▸ 9K-X-514 001 ▸ | D | 1716 | AHB | M | + | TSW | 08/98 ▸ 09/00 | 6K0121253AA | 731267 | 628 377,5 | ALM |
| 1.7 SDi | 9K9/A/B | D | 1716 | AHB | M | - | TSW | 07/96 ▸ 09/00 | 1HM121253D | 731268 | 628 377,5 | ALM |
| 1.7 SDi | 9K9/A/B | D | 1716 | AHB | M | | TSW | 07/96 ▸ 09/00 | 6K0121253K | 730947 | 525 322 | ALM |
| 1.7 SDi | 9K9/A/B ▸ 9K-X-514 000 | D | 1716 | AHB | M | + | TSW | 07/96 ▸ 08/98 | 6K0121253A | 730945 | 628 322 | ALM |
| 1.9 SDi,1.9 TDi | 9K9/A/B | D | 1896 | ALH,AYQ | M | +/- | TSW | 09/00 ▸ 06/03 | 6K0121253AS | 732710 | 628 377,5 | ALM |
| 1.9 D | 9K9/A/B | D | 1896 | 1Y | M | + | TSW | 11/95 ▸ 06/03 | 1H0121253P | 731265 | 628 377,5 | ALM |
| 1.9 SDi,1.9 TDi | 9K9/A/B ▸ 9K-X-514 001 ▸ | D | 1896 | 1Z,AEY,AHU,ALE | M | + | TSW | 10/96 ▸ 09/00 | 6K0121253AA | 731267 | 628 377,5 | ALM |
| 1.9 SDi | 9K9/A/B | D | 1896 | AEY | M | - | TSW | 11/95 ▸ 09/00 | 1HM121253D | 731268 | 628 377,5 | ALM |
| 1.9 TDi | 9K9/A/B | D | 1896 | 1Z,AHU | M | - | TSW | 10/96 ▸ 09/00 | 6K0121253AC | 731728 | 628 322 | ALM |
| 1.9 SDi | 9K9/A/B | D | 1896 | AEY | M | | TSW | 11/95 ▸ 09/00 | 6K0121253K | 730947 | 525 322 | ALM |
| 1.9 D | 9U71 | D | 1896 | AEF | M | | TSW | 06/96 ▸ 12/00 | 6U0121253A | 732479 | 590 322 | ALM |
| 1.9 TDi | 9K9B | D | 1896 | ALE | M | | TSW | 09/97 ▸ 09/00 | 6K0121253AC | 731728 | 628 322 | ALM |
| 1.9 SDi,1.9 TDi | 9K9/A/B ▸ 9K-X-514 000 | D | 1896 | AEY,AHU | M | + | TSW | 11/95 ▸ 08/98 | 6K0121253A | 730945 | 628 322 | ALM |
| 1.9 D | 9K9/A/B | D | 1896 | 1Y | M | - | TSW | 11/95 ▸ 08/98 | 6K0121253G | 731266 | 628 322 | ALM |

## CADDY (2004>2010)

| | | | CC | | | AC | | | OE | Valeo | DIM. | TECH |
|---|---|---|---|---|---|---|---|---|---|---|---|---|
| 2.0 i CNG | 2KA/A/B ; 2KB/C/D | F | 1984 | BSX | M | +/- | TSW | 04/06 ▸ | 1K0121251P | 734332 | 640 414,5 | ALM |
| 2.0 i CNG | 2KA/A/B ; 2KB/C/D | F | 1984 | BSX | M | +/- | TSW | 04/06 ▸ | 1K0121251BQ | 734335 | 640 414,5 | ALM |
| 2.0 i CNG | 2KHA ; 2KB/D ; 2KJ/CE | F | 1984 | BSX | M | +/- | TSW | 04/06 ▸ 08/10 | 1K0121251BR | 734335 | 640 414,5 | ALM |
| 2.0 i CNG | 2KA/A/B ; 2KB/C/D | F | 1984 | BSX | M | + | TSW | 04/06 ▸ | 1K0121251F | 734335 | 640 414,5 | ALM |
| 2.0 i CNG | 2KBC ; 2KA/A/B | F | 1984 | BSX | M | + | TSW | 04/06 ▸ 08/10 | 1K0121251BR | 734335 | 640 414,5 | ALM |
| 2.0 i CNG | 2KA/A/B ; 2KHA ; 2KB C/D ; 2KJ/C/E | F | 1984 | BSX | M | | TSW | 04/06 ▸ 08/10 | 1K0121251P | 734332 | 640 414,5 | ALM |
| 2.0 i CNG | 2KA/A/B ; 2KHA ; 2KB C/D ; 2KJ/C/E | F | 1984 | BSX | M | | TSW | 04/06 ▸ 08/10 | 1K0121251F | 734335 | 640 414,5 | ALM |
| 1.4 i 16V | 2KA/A/B ; 2KB/C/D | E | 1390 | BCA,BUD | M | +/- | TSW | 02/04 ▸ | 1K0121251BQ | 734335 | 640 414,5 | ALM |
| 1.4 i 16V | 2KA/A ; 2KB/C/D | E | 1390 | BCA,BUD | M | +/- | TSW | 02/04 ▸ 08/10 | 1K0121251BR | 734335 | 640 414,5 | ALM |
| 1.4 i 16V | 2KA/A/B ; 2KB/C/D | E | 1390 | BCA,BUD | M | +/- | TSW | 02/04 ▸ | 1K0121251P | 734332 | 640 414,5 | ALM |
| 1.4 i 16V | 2KA/A/B ; 2KB/C/D | E | 1390 | BCA,BUD | M | + | TSW | 02/04 ▸ | 1K0121251F | 734335 | 640 414,5 | ALM |
| 1.4 i 16V | 2KBC ; 2KA/A/B | E | 1390 | BCA,BUD | M | + | TSW | 02/04 ▸ 08/10 | 1K0121251BR | 734335 | 640 414,5 | ALM |
| 1.4 i 16V | 2KA/A/B ; 2KB/C/D | E | 1390 | BCA,BUD | M | | TSW | 02/04 ▸ 08/10 | 1K0121251P | 734332 | 640 414,5 | ALM |
| 1.4 i 16V | 2KA/A/B ; 2KB/C/D | E | 1390 | BCA,BUD | M | | TSW | 02/04 ▸ 08/10 | 1K0121251F | 734335 | 640 414,5 | ALM |

Radiator Radiateur Motorkühler Radiatore di raffreddamento Radiator Radyatör Radiador Радиатор vízhűtő Vodní chladič Radiator Ψυγείο



• **New** Nouveau **Nuevo** Novo **Nuovo** Nieuw **Neu** Nowość **Yeni** Новый Νέο **Novy**

# VOLKSWAGEN (.../...)

## CADDY (2004>2010) (.../...)

| Type Ctr. | | CC | | | AC | | | OE | Valeo | DIM. | TECH |
|---|---|---|---|---|---|---|---|---|---|---|---|
| 1.4 i 16V | 2KAB | E | 1390 | BCA | M | | TSW | 06/05 ▸ 05/06 | 1K0121251BR | **734335** | 640 414,5 | ALM |
| 1.6 i | 2KBC ; 2KHA ; 2KA/A/B ; 2KJ/C/E | E | 1595 | BGU,BSE,BSF | M | +/- | TSW | 04/04 ▸ 08/10 | 1K0121251BR | **734335** | 640 414,5 | ALM |
| 1.6 i | 2KA/A/B ; 2KB/C/D | E | 1595 | BGU,BSE,BSF | M | +/- | TSW | 04/04 ▸ | 1K0121251BQ | **734335** | 640 414,5 | ALM |
| 1.6 i | 2KA/A/B ; 2KB/C/D | E | 1595 | BGU,BSE,BSF | M | +/- | TSW | 04/04 ▸ | 1K0121251P | **734332** | 640 414,5 | ALM |
| 1.6 i | 2KA/A ; 2KB/C/D | E | 1595 | BGU | M | + | TSW | 02/04 ▸ | 1K0121251E | **734335** | 640 414,5 | ALM |
| 1.6 i | 2KA/A ; 2KB/C/D | E | 1595 | BGU | M | + | TSW | 02/04 ▸ | 1K0121251AR | **735120** | 650 414,5 | ALM |
| 1.6 i | 2KA/A/B ; 2KB/C/D | E | 1595 | BGU,BSE,BSF | M | + | TSW | 04/04 ▸ | 1K0121251F | **734335** | 640 414,5 | ALM |
| 1.6 i | 2KA/A ; 2KB/C/D | E | 1595 | BGU,BSE,BSF | M | + | TSW | 04/04 ▸ 08/10 | 1K0121251BR | **734335** | 640 414,5 | ALM |
| 1.6 i | 2KA/A ; 2KB/C/D | E | 1595 | BGU | M | + | TSW | 04/04 ▸ 05/05 | 1K0121251CJ | **735120** | 650 414,5 | ALM |
| 1.6 i | 2KA/A/B ; 2KB/C/D | E | 1595 | BSE,BSF | M | | TSW | 06/05 ▸ 08/10 | 1K0121251F | **734335** | 640 414,5 | ALM |
| 1.6 i | 2KA/A/B ; 2KB/C/D | E | 1595 | BSE,BSF | M | | TSW | 06/05 ▸ 08/10 | 1K0121251P | **734332** | 640 414,5 | ALM |
| 1.6 i | 2KH/A ; 2KJ/C/E | E | 1595 | BSE | M | | TSW | 05/08 ▸ 08/10 | 1K0121251BR | **734335** | 640 414,5 | ALM |
| 1.9 TDi | 2KA/A/B ; 2KB/C/D | D | 1896 | BJB | M | +/- | TSW | 02/04 ▸ | 1K0121253H | **732872** | 650 414,5 | ALM |
| 1.9 TDi | 2KA/A/B ; 2KB/C/D | D | 1896 | BJB | M | +/- | TSW | 02/04 ▸ 08/10 | 1K0121253AA | **732872** | 650 414,5 | ALM |
| 1.9 TDi | 2KAA | D | 1896 | BJB | M | + | TSW | 02/04 ▸ | 1K0121251F | **734335** | 640 414,5 | ALM |
| 1.9 TDi | 2KAA | D | 1896 | BJB | M | + | TSW | 02/04 ▸ 08/10 | 1K0121251BR | **734335** | 640 414,5 | ALM |
| 1.9 TDi | 2KH/A ; 2KJ/C/E | D | 1896 | BJB | M | - | TSW | 11/07 ▸ 08/10 | 1K0121253AA | **732872** | 650 414,5 | ALM |
| 1.9 TDi | 2KA/A/B ; 2KB/C/D | D | 1896 | BLS | A | + | TSW | 06/05 ▸ | 1K0121251AN | **735120** | 650 414,5 | ALM |
| 2.0 SDi | 2KA/A/B ; 2KB/C/D | D | 1968 | BDJ,BST | M | +/- | TSW | 02/04 ▸ | 1K0121251P | **734332** | 640 414,5 | ALM |
| 2.0 SDi | 2KA/A/B ; 2KB/C/D | D | 1968 | BDJ,BST | M | +/- | TSW | 02/04 ▸ 08/10 | 1K0121251BR | **734335** | 640 414,5 | ALM |
| 2.0 SDi | 2KA/A/B ; 2KB/C/D | D | 1968 | BDJ,BST | M | +/- | TSW | 02/04 ▸ | 1K0121251BQ | **734335** | 640 414,5 | ALM |
| 2.0 SDi | 2KA/B ; 2KB/C/D | D | 1968 | BST | M | + | TSW | 06/05 ▸ 08/10 | 1K0121251BR | **734335** | 640 414,5 | ALM |
| 2.0 SDi | 2KA/A/B ; 2KB/C/D | D | 1968 | BST | M | + | TSW | 06/05 ▸ | 1K0121251F | **734335** | 640 414,5 | ALM |
| 2.0 SDi | 2KA/A/B ; 2KB/C/D | D | 1968 | BDJ,BST | M | | TSW | 02/04 ▸ 08/10 | 1K0121251P | **734332** | 640 414,5 | ALM |
| 2.0 SDi | 2KA/A/B ; 2KB/C/D | D | 1968 | BDJ,BST | M | | TSW | 02/04 ▸ | 1K0121251F | **734335** | 640 414,5 | ALM |

## CRAFTER

| | | | | | | | | | | | | |
|---|---|---|---|---|---|---|---|---|---|---|---|---|
| 2.5 TDi | 2EA/0/1 ; 2EB/0/1 2ED/0/1 ; 2EH1 ; 2EK1 ; 2EX1 ; 2EY1 ; 2EE/0 1 ; 2FC/0/1 ; 2FF/0/1 ; 2FL1 ; 2FM1 ; 2FG/0 1 ; 2FZ/0/1 | D | 2460 | BJJ,BJK | M | +/- | | 04/06 ▸ | 2E0121253 | **734930** | 680 414,5 | ALM |
| 2.5 TDi | 2EA/0/1 ; 2EB/0/1 2ED/0/1 ; 2EH1 ; 2EK1 ; 2EX1 ; 2EY1 ; 2EE/0 1 ; 2FC/0/1 ; 2FF/0/1 ; 2FL1 ; 2FM1 ; 2FG/0 1 ; 2FZ/0/1 | D | 2460 | BJM | M | +/- | | 04/06 ▸ 07/11 | 2E0121253A | **735084** | 680 414,7 | ALB |
| 2.5 TDi | 2EA/0/1 ; 2EB/0/1 2ED/0/1 ; 2EH1 ; 2EK1 ; 2EX1 ; 2EY1 ; 2EE/0 1 ; 2FC/0/1 ; 2FF/0/1 ; 2FL1 ; 2FM1 ; 2FG/0 1 ; 2FZ/0/1 | D | 2460 | BJL | M | + | | 04/06 ▸ | 2E0121253A | **735084** | 680 414,7 | ALB |
| 2.5 TDi | 2FL1 ; 2FM1 ; 2FG/0 1 ; 2FZ/0/1 | D | 2460 | BJL | M | - | | 04/06 ▸ | 2E0121253 | **734930** | 680 414,5 | ALM |
| 2.5 TDi | 2FG0 | D | 2460 | BJJ,BJK | M | - | | 04/06 ▸ | 2E0121253B | **734927** | 680 414,5 | ALM |
| 2.5 TDi | 2EA/0/1 ; 2EB/0/1 2ED/0/1 ; 2EH1 ; 2EK1 ; 2EX1 ; 2EY1 ; 2EE/0 1 ; 2FC/0/1 ; 2FG1 ; 2FL1 ; 2FM1 ; 2FF/0/1 2FZ/0/1 | D | 2460 | BJJ,BJK | M | | | 04/06 ▸ | 2E0121253B | **734927** | 680 414,5 | ALM |
| 2.5 TDi | 2EA/0/1 ; 2EB/0/1 2ED/0/1 ; 2EH1 ; 2EK1 ; 2EX1 ; 2EY1 ; 2EE/0 1 ; 2FC/0/1 ; 2FG1 ; 2FL1 ; 2FM1 ; 2FF/0/1 2FZ/0/1 | D | 2460 | BJK,BJL | M | | | 04/06 ▸ | 2E0121253 | **734930** | 680 414,5 | ALM |

## LT II (96>2003)

| | | | | | | | | | | | | |
|---|---|---|---|---|---|---|---|---|---|---|---|---|
| 2.3 i | 2DA/0/1 ; 2DB/0/1 ; 2DC/0/1 ; 2DD/0/1/2 2DE/0/1 ; 2DG1 ; 2DF/0/1/2 ; 2DK1 ; 2DH/1 2 ; 2DL/1/2 ; 2DM/1/2 | E | 2295 | AGL | M | - | TSW | 05/96 ▸ 11/01 | 2D0121253B | **731605** | 682 414.5 | ALM |
| 2.5 TDI | 2DA/0/1 ; 2DB/0/1 2DC/0/1 ; 2DD/0/1/2 ; 2DE/0/1 ; 2DF/0/1/2 2DG/0/1/2 ; 2DK1 ; 2DH/1/2 ; 2DL/1/2 ; 2DM 1/2 2D-2-000 002 ▸ | D | 2460 | ANJ | M | +/- | TSW | 07/97 ▸ 05/03 | 2D0121253E | **732952** | 680 414 | ALB |
| 2.5 SDi,2.5 TDI | 2DA/0/1 ; 2DB/0/1 2DC/0/1 ; 2DD/0/1/2 ; 2DE/0/1 ; 2DF/0/1/2 2DG/0/1/2 ; 2DK1 ; 2DH/1/2 ; 2DL/1/2 ; 2DM 1/2 | D | 2460 | AGX,AHD,ANJ,APA | M | - | TSW | 05/96 ▸ 05/03 | 2D0121253B | **731605** | 682 414.5 | ALM |
| 2.5 TDI | 2DG2 | D | 2460 | AHD | M | | TSW | 05/96 ▸ 04/97 | 2D0121253B | **731605** | 682 414.5 | ALM |

# VOLKSWAGEN (.../...)

## LT II (96>2003) (.../...)

| | | CC | | | AC | | | OE | Valeo | DIM. | TECH |
|---|---|---|---|---|---|---|---|---|---|---|---|
| 2.5 TDI 2DA/0/1 ; 2DB/0/1 2DC/0/1 ; 2DD/0/1/2 ; 2DE/0/1 ; 2DF/0/1/2 2DG/0/1/2 ; 2DK1 ; 2DH/1/2 ; 2DL/1/2 ; 2DM 1/2 2 000 002, 2D-2-000 002 ▸ | D | 2461 | AVR,BBE,BBF | M | +/- | TSW | > ▸ 05/03 | 2D0121253E | **732952** | 680 414 | ALB |
| 2.5 TDI 2DA/0/1 ; 2DB/0/1 2DC/0/1 ; 2DD/0/1/2 ; 2DE/0/1 ; 2DF/0/1/2 2DG/0/1/2 ; 2DK1 ; 2DH/1/2 ; 2DL/1/2 ; 2DM 1/2 | D | 2461 | AVR,BBE,BBF | M | - | TSW | 09/00 ▸ | 2D0121253B | **731605** | 682 414.5 | ALM |
| 2.8 TD 2DA/0/1 ; 2DB/0/1 2DC/0/1 ; 2DD/0/1/2 ; 2DE/0/1 ; 2DF/0/1/2 2DG/0/1/2 ; 2DK1 ; 2DH/1/2 ; 2DL/1/2 ; 2DM 1/2 | D | 2798 | AGK,ATA | M | - | TSW | 07/96 ▸ 01/02 | 2D0121253B | **731605** | 682 414.5 | ALM |
| 2.8 TD,2.8 TDI 2DA/0/1 ; 2DB/0/1 2DC/0/1 ; 2DD/0/1/2 ; 2DE/0/1 ; 2DF/0/1/2 2DG/0/1/2 ; 2DK1 ; 2DH/1/2 ; 2DM1 ; 2DL/1/2 | D | 2799 | AUH,BCQ | M | +/- | TSW | 02/02 ▸ 05/03 | 2D0121253E | **732952** | 680 414 | ALB |
| 2.8 TD,2.8 TDI 2DA/0/1 ; 2DB/0/1 2DC/0/1 ; 2DD/0/1/2 ; 2DE/0/1 ; 2DF/0/1/2 2DG/0/1/2 ; 2DK1 ; 2DH/1/2 ; 2DM1 ; 2DL/1/2 | D | 2799 | AUH,BCQ | M | - | TSW | 02/02 ▸ 05/03 | 2D0121253B | **731605** | 682 414.5 | ALM |

## LT III (2003>)

| | | CC | | | AC | | | OE | Valeo | DIM. | TECH |
|---|---|---|---|---|---|---|---|---|---|---|---|
| 2.5 TDi 2DA/0/1 ; 2DB/0/1 2DC/0/1 ; 2DD/0/1/2 ; 2DE/0/1 ; 2DF/0/1/2 2DG/0/1/2 ; 2DK1 ; 2DH/1/2 ; 2DL/1/2 ; 2DM 1/2 | D | 2460 | ANJ | M | | TSW | 06/03 ▸ 07/06 | 2D0121253E | **732952** | 680 414 | ALB |
| 2.5 TDi 2DA/0/1 ; 2DB/0/1 2DC/0/1 ; 2DD/0/1/2 ; 2DE/0/1 ; 2DF/0/1/2 2DG/0/1/2 ; 2DK1 ; 2DH/1/2 ; 2DL/1/2 ; 2DM 1/2 | D | 2460 | ANJ | M | | TSW | 06/03 ▸ 07/06 | 2D0121253B | **731605** | 682 414.5 | ALM |
| 2.5 TDi 2DA/0/1 ; 2DB/0/1 2DC/0/1 ; 2DD/0/1/2 ; 2DE/0/1 ; 2DF/0/1/2 2DG/0/1/2 ; 2DK1 ; 2DH/1/2 ; 2DL/1/2 ; 2DM 1/2 | D | 2461 | AVR,BBE,BBF | M | | TSW | 06/03 ▸ 07/06 | 2D0121253B | **731605** | 682 414.5 | ALM |
| 2.5 TDi 2DA/0/1 ; 2DB/0/1 2DC/0/1 ; 2DD/0/1/2 ; 2DE/0/1 ; 2DF/0/1/2 2DG/0/1/2 ; 2DK1 ; 2DH/1/2 ; 2DL/1/2 ; 2DM 1/2 | D | 2461 | AVR,BBE,BBF | M | | TSW | 06/03 ▸ 07/06 | 2D0121253E | **732952** | 680 414 | ALB |
| 2.8 TDi 2DA/0/1 ; 2DB/0/1 2DC/0/1 ; 2DD/0/1/2 ; 2DE/0/1 ; 2DF/0/1/2 2DG/0/1/2 ; 2DK1 ; 2DH/1/2 ; 2DL/1/2 ; 2DM 1/2 | D | 2799 | AUH,BCQ | M | | TSW | 06/03 ▸ 07/06 | 2D0121253B | **731605** | 682 414.5 | ALM |
| 2.8 TDi 2DA/0/1 ; 2DB/0/1 2DC/0/1 ; 2DD/0/1/2 ; 2DE/0/1 ; 2DF/0/1/2 2DG/0/1/2 ; 2DK1 ; 2DH/1/2 ; 2DL/1/2 ; 2DM 1/2 | D | 2799 | AUH,BCQ | M | | TSW | 06/03 ▸ 07/06 | 2D0121253E | **732952** | 680 414 | ALB |

## TARO

| | | CC | | | AC | | | OE | Valeo | DIM. | TECH |
|---|---|---|---|---|---|---|---|---|---|---|---|
| 1.8 7AE/1/2 ; 7AX/2/3 | E | 1812 | 2Y | M | | | 02/89 ▸ 09/94 | J1640071071 | | 400 530 | CBS |
| 2.2 7AE/1/2 ; 7AX/2/3 | E | 2236 | 4Y | M | | | 06/89 ▸ 07/94 | J1640071081 | | 400 530 | CBS |
| 2.4 i 7AE/1/2 ; 7AG/1/3 ; 7AX/2/3 | E | 2366 | 22R-EC | M | | | 06/89 ▸ 03/97 | J1640035350 | | 400 530 | CBS |
| 2.4 D 7AE/1/2 ; 7AG/1/2/3 ; 7AX/2/3 | D | 2446 | 2L | M | | | 02/89 ▸ 03/97 | J1640054630 | **734515** | 475 525 | CBS |
| 2.4 D 7AE/1/2 ; 7AX3 ; 7AG/1/2 | D | 2446 | 2L | M | | | 02/89 ▸ 03/97 | J1640054610 | **734515** | 475 525 | CBS |

## TRANSPORTER (F24) (79>92)

| | | CC | | | AC | | | OE | Valeo | DIM. | TECH |
|---|---|---|---|---|---|---|---|---|---|---|---|
| 1.9 245/0/1 ; 246/0/1 ; 247/0/3/A ; 2510 ; 2520 248/0/3 ; 253/0/1/2/3/4/5/9/O/S/T ; 254/0/2 3/4/5/9 ; 255/0/1/2/3/4/5 ; 256/0/1/2/3/4/5 | E | 1915 | DF,DG,SP | M | + | TSW | 08/82 ▸ 07/92 | 068121253E | **732435** | 568 437,6 | CBS |
| 1.9 245/0/1 ; 246/0/1 ; 247/0/3/A ; 2510 ; 2520 248/0/3 ; 253/0/1/2/3/4/5/9/O/S/T ; 254/0/2 3/4/5/9 ; 255/0/1/2/3/4/5 ; 256/0/1/2/3/4/5 | E | 1915 | DF,DG,SP | M | - | TSW | 08/82 ▸ 07/92 | 025121253A | **732435** | 568 437,6 | CBS |
| 1.9 2460 ; 245/0/G/H ; 247/0/3/G/K ; 248/0/3 251/0/G/H ; 252/0/D ; 253/0/1/2/3/4/5/9/G/H J/K/L/M ; 254/0/2/3/5/9/D/F ; 255/0/1/2/4/5 6/G/H/J/K/L/M/N/S/T ; 256/0/2/3/4/E/F | E | 1915 | DH,GW | M | | TSW | 01/83 ▸ 07/85 | 068121253E | **732435** | 568 437,6 | CBS |
| 1.9 245/0/1 ; 246/0/1 ; 247/0/3 ; 2510 ; 2520 248/0/3 ; 253/0/1/2/3/4/5/9 ; 254/0/2/3/5 9 ; 255/0/1/2/4/5 ; 256/0/2/3 | E | 1915 | DG | A | + | TSW | 08/82 ▸ 07/92 | 068121253E | **732435** | 568 437,6 | CBS |
| 1.9 245/0/1 ; 246/0/1 ; 247/0/3 ; 2510 ; 2520 248/0/3 ; 253/0/1/2/3/4/5/9 ; 254/0/2/3/5 9 ; 255/0/1/2/4/5 ; 256/0/2/3 | E | 1915 | DG | A | - | TSW | 08/82 ▸ 07/92 | 025121253A | **732435** | 568 437,6 | CBS |

Radiator Radiateur Motorkühler Radiatore di raffreddamento Radiator Radyatör Radiator Радиатор Radiador Vodní chladič Radiator Ψυγείο



• **New** Nouveau **Nuevo** Novo **Nuovo** Nieuw **Neu** Nowość **Yeni** Новый Νέο **Novy**

# VOLKSWAGEN (.../...)

## TRANSPORTER (F24) (79>92) (.../...)

| | | | | | | | | | | | | |
|---|---|---|---|---|---|---|---|---|---|---|---|---|
| 1.9 | 2460 ; 245/0/G/H ; 247/0/3/G/K ; 248/0/3 251/0/G ; 252/0/D ; 253/0/1/2/3/4/5/9/G/H/J K/L/M ; 254/0/2/3/5/9/D/F ; 255/0/1/2/4/5/6 G/H/J/K/L/M/N ; 256/0/2/3/4/E/F | E | 1915 | DH,GW | A | | TSW | 01/83 ▸ 08/85 | 068121253E | **732435** | 568 437,6 | CBS |
| 1.9 | | E | 1915 | DF,DG,EY,SP | M | + | TSW | 08/82 ▸ 07/91 | 068121253E | **732435** | 568 437,6 | CBS |
| 1.9 | | E | 1915 | DF,DG,EY,SP | M | - | TSW | 08/82 ▸ 07/91 | 025121253A | **732435** | 568 437,6 | CBS |
| 2.1 | 245/0 ; 246/0/F/G ; 247/0/3/A/C/G/K ; 248/0 A/G/K ; 251/0/G ; 252/0/G ; 253/0/1/2/3/4/5 9/F/G/H/J/K/L/M/P/S/T ; 254/0/3/5/C/D/F/G/L M ; 255/0/1/2/3/4/5/6/F/G/H/J/K/L/M/N ; 256 0/2/3/4/5/E/F/G/K/L | E | 2109 | DJ,MV | M | - | TSW | 08/84 ▸ 07/92 | 068121253E | **732435** | 568 437,6 | CBS |
| 2.1 | | E | 2109 | DJ,MV,SR,SS | M | - | TSW | 08/85 ▸ 09/91 | 068121253E | **732435** | 568 437,6 | CBS |
| 1.6 D,1.6 TD | 245/0/1 ; 246/0/1 247/0/3/A ; 2510 ; 2520 ; 248/0/3/A ; 253/0 1/2/3/4/5/7/9/S/T ; 254/0/2/3/5/9 ; 255/0/1 2/3/4/5/S/T ; 256/0/2/3/4/5 | D | 1588 | CS,JX | M | - | TSW | 05/79 ▸ 07/92 | 068121253E | **732435** | 568 437,6 | CBS |
| 1.6 TD | 2556 | D | 1588 | JX | A | - | TSW | 08/84 ▸ 07/85 | 068121253E | **732435** | 568 437,6 | CBS |
| 1.6 TD | | D | 1588 | JX | M | - | TSW | 08/84 ▸ 07/91 | 068121253E | **732435** | 568 437,6 | CBS |
| 1.8 D | 245/0/1 ; 246/0/1 ; 247/0/3 ; 2510 ; 2520 248/0/3 ; 253/1/2/3/4/5/9 ; 254/0/2/3/5/6 255/0/1/2/3/5 ; 256/0/2/3/5 | D | 1715 | KY | M | - | TSW | 08/84 ▸ 07/92 | 068121253E | **732435** | 568 437,6 | CBS |
| 1.8 D | | D | 1715 | KY | M | - | TSW | 10/86 ▸ 07/91 | 068121253E | **732435** | 568 437,6 | CBS |

## TRANSPORTER (F70) (90>96)

| | | | | | | | | | | | | |
|---|---|---|---|---|---|---|---|---|---|---|---|---|
| 1.8 | 70A/1 ; 70B/1/C/K/M ; 70E1 ; 70H1 ; 70C/2/3 70J/1/C/K/M ; 70L1 ; 70M1 ; 70K/2/3 | E | 1781 | PD | M | +/- | TSW | 09/90 ▸ 1992 | 701121253 | **731411** | 720 320 | CBS |
| 1.8 | 70A/1 ; 70B/1/C/K/M ; 70E1 ; 70H1 ; 70C/2/3 70J/1/C/K/M ; 70L1 ; 70M1 ; 70K/2/3 | E | 1781 | PD | M | +/- | TSW | 1992 ▸ 07/92 | 701121253D | **732397** | 720 377,5 | ALM |
| 2.0 | 70A/1 ; 70B/1/C/K/M/T ; 70E1 ; 70H1 ; 70C/2 3 ; 70J/1/C/K/M/T ; 70L1 ; 70M1 ; 70K/2/3 | E | 1968 | AAC | M | +/- | TSW | 09/90 ▸ 1992 | 701121253 | **731411** | 720 320 | CBS |
| 2.0 | 70C3 ; 70B/T ; 70J/C/T/W 70-N-002 001 ▸ | E | 1968 | AAC | M | +/- | TSW | 10/91 ▸ 12/95 | 701121253K | **732397** | 720 377,5 | ALM |
| 2.0 | 70A/1 ; 70B/1/C/K/M/T ; 70E1 ; 70H1 ; 70C/2 3 ; 70J/1/C/K/M/T/W ; 70L1 ; 70M1 ; 70K/2/3 | E | 1968 | AAC | M | +/- | TSW | 08/92 ▸ 12/95 | 701121253D | **732397** | 720 377,5 | ALM |
| 2.0 | 70A/1 ; 70C2 ; 70E1 ; 70H1 ; 70B/1/K/M ; 70J 1/K/M ; 70L1 ; 70M1 ; 70K/2/3 | E | 1968 | AAC | M | + | TSW | 11/91 ▸ 12/95 | 701121253K | **732397** | 720 377,5 | ALM |
| 2.0 | 70BC | E | 1968 | AAC | M | - | TSW | 11/91 ▸ 07/94 | 701121253K | **732397** | 720 377,5 | ALM |
| 2.0 | 70A/1 ; 70B/1/C/K/M/T ; 70E1 ; 70H1 ; 70C/2 3 ; 70J/1/C/K/T ; 70L1 ; 70M1 ; 70K/2/3 70-N-002001 ▸ | E | 1968 | AAC | A | +/- | TSW | > ▸ 07/93 | 701121253D | **732397** | 720 377,5 | ALM |
| 2.0 | 70A/1 ; 70B/1/C/K/M/T ; 70E1 ; 70H1 ; 70C/2 3 ; 70J/1/C/K/T ; 70L1 ; 70M1 ; 70K/2/3 | E | 1968 | AAC | A | +/- | TSW | 09/90 ▸ 1992 | 701121253 | **731411** | 720 320 | CBS |
| 2.0 | 70A/1 ; 70B/1/K/M/T ; 70E1 ; 70H1 ; 70C/2/3 70J/1/C/K/T ; 70L1 ; 70M1 ; 70K/2/3 70-N-002 001 ▸ | E | 1968 | AAC | A | +/- | TSW | 10/91 ▸ 12/95 | 701121253K | **732397** | 720 377,5 | ALM |
| 2.0 | 70A1 ; 70BC | E | 1968 | AAC | A | + | TSW | 11/91 ▸ 12/95 | 701121253K | **732397** | 720 377,5 | ALM |
| 2.0 | 70BC | E | 1968 | AAC | A | - | TSW | 08/92 ▸ 07/93 | 701121253K | **732397** | 720 377,5 | ALM |
| 2.0 | 70A/1 ; 70C2 ; 70E1 ; 70H1 ; 70B/1/K/M ; 70J 1/K/M ; 70M1 ; 70K/2/3 ▸ 70-N-002 000 | E | 1968 | AAC | M | +/- | TSW | 09/90 ▸ 10/91 | 701121253B | **731411** | 720 320 | CBS |
| 2.0 | 70A/1 ; 70C3 ; 70E1 ; 70H1 ; 70B/1/C/M 70K2 ; 70L1 ; 70M1 ; 70J/1/C ▸ 70-N-002 000 | E | 1968 | AAC | M | + | TSW | 09/90 ▸ 10/91 | 701121253B | **731411** | 720 320 | CBS |
| 2.0 | 70BC ▸ 70-N-002 000 | E | 1968 | AAC | M | - | TSW | 09/90 ▸ 10/91 | 701121253B | **731411** | 720 320 | CBS |
| 2.0 | 70A/1 ; 70B/C/K ▸ 70-N-002 000 | E | 1968 | AAC | A | +/- | TSW | 09/90 ▸ 07/91 | 701121253B | **731411** | 720 320 | CBS |
| 2.0 | 70A/1 ; 70B/1/M ; 70E1 ; 70H1 ; 70C/2/3 70J/1/C/K ; 70L1 ; 70M1 ; 70K/2/3 ▸ 70-N-002 000 | E | 1968 | AAC | A | + | TSW | 09/90 ▸ 10/91 | 701121253B | **731411** | 720 320 | CBS |
| 2.0 | 70BC ▸ 70-N-002 000 | E | 1968 | AAC | A | - | TSW | 09/90 ▸ 10/91 | 701121253B | **731411** | 720 320 | CBS |
| 2.5,2.5 i | 70A/1 ; 70B/1/C/K/M T ; 70E1 ; 70H1 ; 70C/2/3 ; 70J/1/C/K/M/T 70L1 ; 70M1 ; 70K/2/3/K | E | 2460 | AAF | M | +/- | TSW | 09/90 ▸ 1992 | 701121253B | **731411** | 720 320 | CBS |
| 2.5,2.5 i | 70A/1 ; 70B/1/C/K/M T ; 70E1 ; 70H1 ; 70C/2/3 ; 70J/1/C/K/M/T 70L1 ; 70M1 ; 70K/2/3/K | E | 2460 | AAF,ACU | M | +/- | TSW | 08/92 ▸ 05/96 | 701121253K | **732397** | 720 377,5 | ALM |
| 2.5 | 70A/1 ; 70B/1/K/M/T ; 70E1 ; 70H1 ; 70C/2/3 70J/1/K/W ; 70L1 ; 70M1 ; 70K/2/3 | E | 2460 | ACU,AEN | M | - | TSW | 02/94 ▸ 12/95 | 701121253K | **732397** | 720 377,5 | ALM |

# VOLKSWAGEN (.../...)

## TRANSPORTER (F70) (90>96) (.../...)

| | | CC | | AC | | | OE | Valeo | DIM. | TECH |
|---|---|---|---|---|---|---|---|---|---|---|
| 2.5 i 70A/1 ; 70B/1/C/K/M ; 70E1 ; 70H1 ; 70C/2/3 70J/1/C ; 70K/2/3/K | E | 2460 | ACU | M | | TSW | 07/95 ▸ 05/96 | 701121253K | **732397** | 720 377,5 | ALM |
| 2.5 70BC ▸ 70-N-002001 ▸ | E | 2460 | AAF | A | +/- | TSW | > ▸ 12/93 | 701121253D | **732397** | 720 377,5 | ALM |
| 2.5 70A/1 ; 70B/1/C/K/M/T ; 70E1 ; 70H1 ; 70C/2 3 ; 70J/1/C/K/M/T ; 70L1 ; 70M1 ; 70K/2/3 | E | 2460 | AAF | A | +/- | TSW | 10/91 ▸ 1992 | 701121253B | **731411** | 720 320 | CBS |
| 2.5 70A/1 ; 70B/1/C/K/M/T ; 70E1 ; 70H1 ; 70C/2 3 ; 70J/1/C/K/M/T ; 70L1 ; 70M1 ; 70K/2/3 | E | 2460 | AAF,ACU | A | +/- | TSW | 08/92 ▸ 12/95 | 701121253K | **732397** | 720 377,5 | ALM |
| 2.5 70A/1 ; 70C2 ; 70E1 ; 70H1 ; 70B/1/K/M/T 70K2 ; 70L1 ; 70M1 ; 70J/1/K/W | E | 2460 | ACU | A | - | TSW | 02/94 ▸ 12/95 | 701121253K | **732397** | 720 377,5 | ALM |
| 2.5 70BC ▸ 70-N-002 000 | E | 2460 | AAF | A | +/- | TSW | 09/90 ▸ 10/91 | 701121253 | **731411** | 720 320 | CBS |
| 1.9 D,1.9 TD 70A/1 ; 70B/1/C/K/M T ; 70E1 ; 70H1 ; 70C/2/3 ; 70J/1/K/M/T/W 70L1 ; 70M1 ; 70K/2/3 | D | 1896 | 1X,ABL | M | +/- | TSW | 09/90 ▸ 12/95 | 701121253K | **732397** | 720 377,5 | ALM |
| 1.9 D 70A/1 ; 70B/1/C/K/M/T ; 70E1 ; 70H1 ; 70C/2 3 ; 70J/1/K/M/T/W ; 70L1 ; 70M1 ; 70K/2/3 | D | 1896 | 1X | M | +/- | TSW | 08/92 ▸ 12/95 | 701121253B | **731411** | 720 320 | CBS |
| 1.9 TD 70A/1 ; 70B/1/K/M/T 70E1 ; 70H1 ; 70C/2/3 ; 70J/1/C/K/T ; 70L1 70M1 ; 70K/2/3 | D | 1896 | ABL | M | - | TSW | 10/92 ▸ 12/95 | 701121253K | **732397** | 720 377,5 | ALM |
| 2.4 D 70A/1 ; 70B/1/C/K/M/T ; 70E1 ; 70H1 ; 70C/2 3 ; 70J/1/C/K/T/W ; 70L1 ; 70M1 ; 70K/2/3/K | D | 2370 | AAB | M | +/- | TSW | 09/90 ▸ 12/95 | 701121253K | **732397** | 720 377,5 | ALM |
| 2.4 D 70A/1 ; 70B/1/C/K/M/T ; 70E1 ; 70H1 ; 70C/2 3 ; 70J/1/C/K/T/W ; 70L1 ; 70M1 ; 70K/2/3/K | D | 2370 | AAB | M | +/- | TSW | 08/92 ▸ 05/96 | 701121253B | **731411** | 720 320 | CBS |
| 2.4 D 70A/1 ; 70B/1/K/M/T ; 70E1 ; 70H1 ; 70C/2/3 70J/1/C/K/M/T/W ; 70L1 ; 70M1 ; 70K/2/3 | D | 2370 | AAB | A | +/- | TSW | 05/92 ▸ 12/95 | 701121253B | **731411** | 720 320 | CBS |
| 2.4 D 70A/1 ; 70B/1/K/M/T ; 70E1 ; 70H1 ; 70C/2/3 70J/1/C/K/M/T/W ; 70L1 ; 70M1 ; 70K/2/3 | D | 2370 | AAB | A | +/- | TSW | 05/92 ▸ 12/95 | 701121253K | **732397** | 720 377,5 | ALM |
| 2.5 TDI 70A/1 ; 70B/1/K/M/T 70E1 ; 70C/2/3 ; 70H/1/3 ; 70K2 ; 70L1 70M1 ; 70J/1/K/W | D | 2460 | ACV | M | + | TSW | 09/95 ▸ 12/95 | 701121253 | **731411** | 720 320 | CBS |
| 2.5 TDI 70A/1 ; 70B/1/K/M/T 70E1 ; 70C/2/3 ; 70H/1/3 ; 70K2 ; 70L1 70M1 ; 70J/1/K/W | D | 2460 | ACV | M | - | TSW | 09/95 ▸ 12/95 | 701121253K | **732397** | 720 377,5 | ALM |

## TRANSPORTER (F7D) (96>2003)

| | | | | | | | | | | | |
|---|---|---|---|---|---|---|---|---|---|---|---|
| 2.0 i 7DA/1 ; 7DB/1/K ; 7DE1 ; 7DH1 ; 7DJK ; 7DK2 7DM1 ; 7DC/2/M/T/U ▸ 1-048 001 ▸ | E | 1968 | AAC | M | +/- | TSW | > ▸ 06/03 | 701121253M | **732845** | 721 377,5 | ALM |
| 2.0 i 7DA/1 ; 7DB/1/K ; 7DE1 ; 7DH1 ; 7DJK ; 7DC/2 A/G/M/T/U ; 7DM1 ; 7DK/2/W | E | 1968 | AAC | M | +/- | TSW | 01/96 ▸ | 701121253K | **732397** | 720 377,5 | ALM |
| 2.0 i 7DJ1 ; 7DC/3 ; 7DL1 ; 7DK/3/M | E | 1968 | AAC | M | +/- | TSW | 01/96 ▸ 06/03 | 7D0121253 | **731616** | 720 414 | ALM |
| 2.0 i 7DA/1 ; 7DB/1/K ; 7DE1 ; 7DH1 ; 7DJK ; 7DC/2 A/G/M/T/U ; 7DM1 ; 7DK/2/W | E | 1968 | AAC | M | | TSW | 01/96 ▸ 06/03 | 7D0121253 | **731616** | 720 414 | ALM |
| 2.0 i 7DKM ; 7DL1 ; 7DJ/1 ▸ 1-048 001 ▸ | E | 1968 | AAC | M | | TSW | 08/00 ▸ 06/03 | 701121253M | **732845** | 721 377,5 | ALM |
| 2.0 i 7DJ1 ; 7DC/3 ; 7DL1 ; 7DK/3/M ▸ 1-048 000 | E | 1968 | AAC | M | | TSW | 01/96 ▸ 08/00 | 701121253K | **732397** | 720 377,5 | ALM |
| 2.5 i 7DA/1 ; 7DB/1/K ; 7DE1 ; 7DH1 ; 7DC/2/M/T/U 7DJ/1/K ; 7DL1 ; 7DM1 ; 7DK/2/T ▸ 1-048 001, 70-1-048 001 ▸ | E | 2460 | AET,AEU,APL,AVT | M | +/- | TSW | > ▸ 06/03 | 701121253M | **732845** | 721 377,5 | ALM |
| 2.5 i 7DH1 ; 7DJ1 ; 7DC/2/3/U ; 7DL1 ; 7DK/2/3/T/W | E | 2460 | ACU,AET,AEU,APL,AVT | M | +/- | TSW | 01/96 ▸ 06/03 | 7D0121253 | **731616** | 720 414 | ALM |
| 2.5 i 7DBK ; 7DA/1 ; 7DH1 ; 7DJ1 ; 7DK2 ; 7DL1 7DC/2/T/U ▸ 1-048 001 ▸ | E | 2460 | ACU,AET,AEU,APL,AVT | M | | TSW | > ▸ 06/03 | 701121253M | **732845** | 721 377,5 | ALM |
| 2.5 i 7DA/1 ; 7DB/1/K ; 7DE1 ; 7DH1 ; 7DC/1/2/3/A G/M/T/U ; 7DJ/1/K ; 7DM1 ; 7DK/2/J/T | E | 2460 | ACU,AET,AEU,APL,AVT | M | | TSW | 01/96 ▸ 06/03 | 7D0121253 | **731616** | 720 414 | ALM |
| 2.5 i 7DA/1 ; 7DB/1/K ; 7DE1 ; 7DH1 ; 7DC/2/M/T/U 7DJ/1/K ; 7DL1 ; 7DM1 ; 7DK/2/T ▸ 1-048 001, 70-1-048 001 ▸ | E | 2460 | AET,AEU,APL,AVT | A | +/- | TSW | > ▸ 06/03 | 701121253M | **732845** | 721 377,5 | ALM |
| 2.5 i 7DH1 ; 7DJ1 ; 7DC/2/3/U ; 7DL1 ; 7DK/2/3/T/W | E | 2460 | ACU,AET,AEU,APL,AVT | A | +/- | TSW | 01/96 ▸ 06/03 | 7D0121253 | **731616** | 720 414 | ALM |
| 2.5 i 7DH1 ; 7DC/2/U ; 7DK2 ; 7DL1 ; 7DJ/1/K ▸ 1-048 001 ▸ | E | 2460 | ACU,AET,AEU,APL | A | | TSW | > ▸ 06/03 | 701121253M | **732845** | 721 377,5 | ALM |
| 2.5 i 7DA/1 ; 7DB/1/K ; 7DE1 ; 7DH1 ; 7DC/2/3/A/G M/T/U ; 7DJ/1/K ; 7DM1 ; 7DK/2/T | E | 2460 | ACU,AET,AEU,APL,AVT | A | | TSW | 01/96 ▸ 06/03 | 7D0121253 | **731616** | 720 414 | ALM |
| 2.5 i 7DA/1 ; 7DB/1/K ; 7DE1 ; 7DH1 ; 7DC/2/3/M/T U ; 7DKT ; 7DM1 ; 7DJ/1/K ▸ 1-048 000 | E | 2460 | AET,AEU,APL | M | +/- | TSW | 08/96 ▸ | 701121253K | **732397** | 720 377,5 | ALM |

Radiator Radiateur Motorkühler Radiatore di raffreddamento Radiator Radyatör Radiador Радиатор vízhűtő Vodní chladič Radiator Ψυγείο



• **New** Nouveau **Nuevo** Novo **Nuovo** Nieuw **Neu** Nowość **Yeni** Новый Νέο **Nový**

## TRANSPORTER (F7D) (96>2003) (.../...)

| Type Ctr. | | CC | | AC | | | OE | Valeo | DIM. | TECH |
|---|---|---|---|---|---|---|---|---|---|---|
| 2.5 i 7DA/1 ; 7DB/1/K ; 7DE1 ; 7DH1 ; 7DC/1/2/3/A/G/M/T/U ; 7DJ/1/K ; 7DL1 ; 7DM1 ; 7DK/2/3/J/T/W ▸ 1-048 000 | E | 2460 | ACU,AET,AEU,APL,AVT | M | | TSW | 01/96 ▸ | 701121253K | 732397 | 720 377,5 | ALM |
| 2.5 i 7DA/1 ; 7DB/1/K ; 7DE1 ; 7DH1 ; 7DJK ; 7DKT 7DM1 ; 7DC/2/3/M/T/U ▸ 1-048 000 | E | 2460 | AET,AEU,APL | A | +/- | TSW | 08/96 ▸ | 701121253K | 732397 | 720 377,5 | ALM |
| 2.5 i 7DA/1 ; 7DB/1/K ; 7DE1 ; 7DH1 ; 7DC/2/3/A/G/M/T/U ; 7DJ/1/K ; 7DL1 ; 7DM1 ; 7DK/2/3/T/W ▸ 1-048 000 | E | 2460 | ACU,AET,AEU,APL,AVT | A | | TSW | 01/96 ▸ | 701121253K | 732397 | 720 377,5 | ALM |
| 2.8 i VR6 7DA/1 ; 7DB/1/K 7DE1 ; 7DH1 ; 7DC/2/3/A/G/M/T/U ; 7DJ/1/K 7DL1 ; 7DM1 ; 7DK/2/3/M/T/W | E | 2792 | AES | M | +/- | TSW | 01/96 ▸ 06/03 | 7D0121253 | 731616 | 720 414 | ALM |
| 2.8 i VR6 7DA/1 ; 7DB/1/K 7DE1 ; 7DH1 ; 7DC/2/3/A/G/M/T/U ; 7DJ/1/K 7DL1 ; 7DM1 ; 7DK/2/3/M/T/W | E | 2792 | AES | A | +/- | TSW | 01/96 ▸ 06/03 | 7D0121253 | 731616 | 720 414 | ALM |
| 2.8 i V6 24V 7DB1 ; 7DA/1 ; 7DE1 7DH1 ; 7DJ1 ; 7DC/2/M/T/U ; 7DL1 ; 7DK/2/T | E | 2792 | AMV | A | | | 05/00 ▸ 06/03 | 7D0121253C | | 719 395,5 | ALB |
| 1.9 TD 7DA/1 ; 7DB/1/K 7DE1 ; 7DH1 ; 7DJK ; 7DKT ; 7DC/2/M/T/U ▸ 1-048 001 ▸ | D | 1896 | ABL | M | +/- | TSW | > ▸ 06/03 | 701121253M | 732845 | 721 377,5 | ALM |
| 1.9 TD 7DH1 ; 7DJ1 ; 7DC/3 7DL1 ; 7DK/3/M | D | 1896 | ABL | M | +/- | TSW | 01/96 ▸ 06/03 | 7D0121253 | 731616 | 720 414 | ALM |
| 1.9 TD 7DH1 ; 7DJ1 ; 7DC/3 7DL1 ; 7DK/3/M | D | 1896 | ABL | M | | TSW | 01/96 ▸ 08/00 | 701121253K | 732397 | 720 377,5 | ALM |
| 1.9 TD 7DA/1 ; 7DB/1/K 7DE1 ; 7DH1 ; 7DJK ; 7DC/2/A/G/M/T/U 7DM1 ; 7DK/2/T/W | D | 1896 | ABL | M | | TSW | 01/96 ▸ 06/03 | 7D0121253 | 731616 | 720 414 | ALM |
| 1.9 TD 7DJ1 ; 7DKM ; 7DL1 7DH/1 ▸ 1-048 001 ▸ | D | 1896 | ABL | M | | TSW | 08/00 ▸ 06/03 | 701121253M | 732845 | 721 377,5 | ALM |
| 1.9 TD 7DA/1 ; 7DB/1/K 7DE1 ; 7DH1 ; 7DJK ; 7DC/2/A/G/M/T/U 7DM1 ; 7DK/2/T/W ▸ 1-048 000 | D | 1896 | ABL | M | +/- | TSW | 01/96 ▸ | 701121253K | 732397 | 720 377,5 | ALM |
| 2.4 D 7DA/1 ; 7DB/1/K ; 7DE1 ; 7DH1 ; 7DJK ; 7DKT 7DM1 ; 7DC/M/T ▸ 1-048 001 ▸ | D | 2370 | AJA | M | +/- | TSW | > ▸ 06/03 | 701121253M | 732845 | 721 377,5 | ALM |
| 2.4 D 7DA/1 ; 7DB/1/K ; 7DE1 ; 7DH1 ; 7DJK ; 7DC/2/3/A/G/M/T/U ; 7DM1 ; 7DK/2/T | D | 2370 | AAB,AJA | M | +/- | TSW | 01/96 ▸ | 701121253K | 732397 | 720 377,5 | ALM |
| 2.4 D 7DH1 ; 7DJ1 ; 7DC/2/3/U ; 7DL1 ; 7DK/2/3/T/W | D | 2370 | AAB,AJA | M | +/- | TSW | 01/96 ▸ 06/03 | 7D0121253 | 731616 | 720 414 | ALM |
| 2.4 D 7DJ1 ; 7DC/2/U ; 7DL1 ; 7DK/2/T ▸ 1-048 001 ▸ | D | 2370 | AAB,AJA | M | | TSW | > ▸ 06/03 | 701121253M | 732845 | 721 377,5 | ALM |
| 2.4 D 7DA/1 ; 7DB/1/K ; 7DE1 ; 7DH1 ; 7DJK ; 7DC/2/3/A/G/M/T/U ; 7DM1 ; 7DK/2/T | D | 2370 | AAB,AJA | M | | TSW | 01/96 ▸ 06/03 | 7D0121253 | 731616 | 720 414 | ALM |
| 2.4 D 7DA/1 ; 7DB/1/K ; 7DE1 ; 7DH1 ; 7DJK ; 7DC/2/3/A/G/M/T/U ; 7DM1 ; 7DK/2/T | D | 2370 | AAB,AJA | A | +/- | TSW | 01/96 ▸ | 701121253K | 732397 | 720 377,5 | ALM |
| 2.4 D 7DH1 ; 7DJ1 ; 7DC/2/3/U ; 7DL1 ; 7DK/2/3/T/W | D | 2370 | AAB,AJA | A | +/- | TSW | 01/96 ▸ 06/03 | 7D0121253 | 731616 | 720 414 | ALM |
| 2.4 D 7DCM ; 7DE1 ; 7DJK ; 7DKT ; 7DB/1/K ▸ 1-048 001 ▸ | D | 2370 | AJA | A | +/- | TSW | 05/97 ▸ 06/03 | 701121253M | 732845 | 721 377,5 | ALM |
| 2.4 D 7DA/1 ; 7DH1 ; 7DJ1 ; 7DK2 ; 7DL1 ; 7DM1 7DC/T/U ▸ 1-048 001 ▸ | D | 2370 | AJA | A | | TSW | > ▸ 06/03 | 701121253M | 732845 | 721 377,5 | ALM |
| 2.4 D 7DA/1 ; 7DB/1/K ; 7DE1 ; 7DH1 ; 7DJK ; 7DC/2/3/A/G/M/T/U ; 7DM1 ; 7DK/2/T | D | 2370 | AAB,AJA | A | | TSW | 01/96 ▸ 06/03 | 7D0121253 | 731616 | 720 414 | ALM |
| 2.4 D 7DH1 ; 7DJ1 ; 7DC/2/3/U ; 7DL1 ; 7DK/2/3/T/W | D | 2370 | AAB,AJA | A | | TSW | 01/96 ▸ | 701121253K | 732397 | 720 377,5 | ALM |
| 2.4 D 7DH1 ; 7DJ1 ; 7DC/2/3/U ; 7DL1 ; 7DK/2/3/T/W ▸ 1-048 000 | D | 2370 | AAB,AJA | M | | TSW | 01/96 ▸ | 701121253K | 732397 | 720 377,5 | ALM |
| 2.5 TDi 7DB1 ; 7DA/1 ; 7DH1 7DJ1 ; 7DC/2/3/M/T/U ; 7DL1 ; 7DM1 ; 7DK/2/3/T/W | D | 2460 | ACV | M | +/- | TSW | 01/96 ▸ 06/03 | 701121253D | 732397 | 720 377,5 | ALM |
| 2.5 TDi 7DB1 ; 7DA/1 ; 7DE1 7DH1 ; 7DJ1 ; 7DK2 ; 7DL1 ; 7DM1 ; 7DC/2/M/T/U | D | 2460 | AXL | M | +/- | TSW | 06/97 ▸ 06/03 | 7D0121253A | 732177 | 720 414,5 | ALM |
| 2.5 TDi 7DA/1 ; 7DB/1/K 7DE1 ; 7DJK ; 7DC/1/2/M/T/U ; 7DL1 ; 7DM1 7DK/2/T ▸ 70-1-048 001, 1-048 001 ▸ | D | 2460 | ACV,AYC | M | +/- | TSW | 08/00 ▸ 06/03 | 701121253M | 732845 | 721 377,5 | ALM |
| 2.5 TDi 7DJ1 ; 7DL1 ; 7DH/1 | D | 2460 | AYC | M | +/- | TSW | 04/01 ▸ 06/03 | 7D0121253 | 731616 | 720 414 | ALM |

# VOLKSWAGEN (.../...)

## TRANSPORTER (F7D) (96>2003) (.../...)

| | | | CC | | | AC | | | OE | Valeo | DIM. | TECH |
|---|---|---|---|---|---|---|---|---|---|---|---|---|
| 2.5 TDi | 7DA/1 ; 7DB/1/K 7DE1 ; 7DH1 ; 7DC/1/2/3/A/G/M/T/U ; 7DJ/1 K ; 7DL1 ; 7DM1 ; 7DK/2/3/T/W | D | 2460 | ACV,AYC | M | | TSW | 01/96 ▸ 06/03 | 7D0121253 | **731616** | 720 414 | ALM |
| 2.5 TDi | 7DC/2/M/T/U ; 7DK/2 T | D | 2460 | AHY | M | | TSW | 05/98 ▸ 09/00 | 7D0121253A | **732177** | 720 414,5 | ALM |
| 2.5 TDi | 7DB1 ; 7DA/1 ; 7DH1 7DJ1 ; 7DC/2/M/T/U ; 7DL1 ; 7DM1 ; 7DK/2/T | D | 2460 | ACV,AYC | M | | TSW | 08/00 ▸ 06/03 | 701121253M | **732845** | 721 377,5 | ALM |
| 2.5 DTi,2.5 TDi | 7DA/1 ; 7DB/1/K 7DE1 ; 7DC/2/M/T/U ; 7DJ/1/K ; 7DM1 ; 7DK/2 T 1-048 001, 70-1-048 001 ▸ | D | 2460 | ACV,AUF | A | +/- | TSW | > ▸ 06/03 | 701121253M | **732845** | 721 377,5 | ALM |
| 2.5 TDi | 7DB1 ; 7DA/1 ; 7DE1 7DH1 ; 7DJ1 ; 7DK2 ; 7DL1 ; 7DM1 ; 7DC/2/M T/U | D | 2460 | AXL | A | +/- | TSW | 06/97 ▸ 06/03 | 7D0121253A | **732177** | 720 414,5 | ALM |
| 2.5 TDi | 7DH/1 ; 7DL1 ; 7DK/2 T | D | 2460 | ACV | A | +/- | TSW | 05/98 ▸ 06/03 | 701121253D | **732397** | 720 377,5 | ALM |
| 2.5 TDi | 7DH1 ; 7DJ1 ; 7DL1 7DB/1 | D | 2460 | AUF,AYC | A | +/- | TSW | 11/99 ▸ 06/03 | 7D0121253 | **731616** | 720 414 | ALM |
| 2.5 TDi | 7DJ1 | D | 2460 | ACV | A | + | TSW | 05/98 ▸ 11/99 | 701121253D | **732397** | 720 377,5 | ALM |
| 2.5 TDi | 7DH1 ; 7DJ1 ; 7DK2 7DL1 ; 7DB/1 | D | 2460 | ACV,AUF,AYC | A | | TSW | > ▸ 06/03 | 701121253M | **732845** | 721 377,5 | ALM |
| 2.5 DTi,2.5 TDi | 7DA/1 ; 7DB/1/K 7DE1 ; 7DC/2/M/T/U ; 7DJ/1/K ; 7DL1 ; 7DM1 7DK/2/T | D | 2460 | ACV,AUF | A | | TSW | 05/97 ▸ 06/03 | 7D0121253 | **731616** | 720 414 | ALM |
| 2.5 TDi | 7DA/1 ; 7DB/1/K 7DE1 ; 7DJK ; 7DC/1/2/A/G/M/T/U ; 7DM1 7DK/2/T ▸ 1-048 000 | D | 2460 | ACV | M | +/- | TSW | 01/96 ▸ 09/00 | 701121253K | **732397** | 720 377,5 | ALM |
| 2.5 TDi | 7DH1 ; 7DJ1 ; 7DC/3 7DL1 ; 7DK/2/3/T/W ▸ 1-048 000 | D | 2460 | ACV | M | | TSW | 01/96 ▸ 08/00 | 701121253K | **732397** | 720 377,5 | ALM |
| 2.5 DTi,2.5 TDi | 7DA/1 ; 7DB/1/K 7DE1 ; 7DC/2/M/T/U ; 7DJ/1/K ; 7DM1 ; 7DK/2 T ▸ 1-048 000 | D | 2460 | ACV,AUF | A | +/- | TSW | 01/96 ▸ | 701121253K | **732397** | 720 377,5 | ALM |
| 2.5 TDi | 7DJ1 ; 7DH/1 ; 7DL1 7DK/2/T ▸ 1-048 000 | D | 2460 | ACV,AUF | A | | TSW | 05/98 ▸ | 701121253K | **732397** | 720 377,5 | ALM |
| 2.5 TDi | 7DB1 ; 7DA/1 ; 7DE1 7DC/2/M/T/U ; 7DM1 ; 7DK/2/T 1-048 001, 70-1-048 001 ▸ | D | 2461 | AJT,AYY | M | +/- | TSW | > ▸ 06/03 | 701121253M | **732845** | 721 377,5 | ALM |
| 2.5 TDi | 7DJ1 ; 7DL1 ; 7DH/1 | D | 2461 | AJT,AYY | M | +/- | TSW | 05/98 ▸ 06/03 | 7D0121253 | **731616** | 720 414 | ALM |
| 2.5 TDi | 7DJ1 ; 7DL1 ; 7DH/1 | D | 2461 | AJT,AYY | M | | TSW | > ▸ 06/03 | 701121253M | **732845** | 721 377,5 | ALM |
| 2.5 TDi | 7DA/1 ; 7DB/1/K 7DE1 ; 7DJK ; 7DC/2/M/T/U ; 7DM1 ; 7DK/2/T | D | 2461 | AJT,AYY | M | | TSW | 05/98 ▸ 06/03 | 7D0121253 | **731616** | 720 414 | ALM |
| 2.5 TDi | 7DJ1 ; 7DL1 ; 7DH/1 | D | 2461 | AJT | M | | TSW | 05/98 ▸ | 701121253K | **732397** | 720 377,5 | ALM |
| 2.5 TDi | 7DB1 ; 7DA/1 ; 7DH1 7DJ1 ; 7DC/2/M/T/U ; 7DK/2/T | D | 2461 | AXG | M | | TSW | 09/00 ▸ 06/03 | 7D0121253A | **732177** | 720 414,5 | ALM |
| 2.5 TDi | 7DA/1 ; 7DB/1/K 7DE1 ; 7DJK ; 7DC/2/M/T/U ; 7DM1 ; 7DK/2/T | D | 2461 | AJT | M | +/- | TSW | 05/98 ▸ | 701121253K | **732397** | 720 377,5 | ALM |

# VOLVO

## 240-260

| | | | | | | | | | | | | |
|---|---|---|---|---|---|---|---|---|---|---|---|---|
| 2.0,2.0 i | 242-21 ; 242-24 242-11 | E | 1986 | B19A,B19E,B19K,B20A | M | +/- | | 08/74 ▸ 08/84 | 86011244 | **810968** | 468 420 | CBS |
| 2.0 | 244231 ; 245243 ; 244242 ; 244233 ; 244243 245273 ; 244273 ; 245242 | E | 1986 | B200E,B200F,B200K | M | +/- | | 09/82 ▸ 1993 | 86011269 | **810970** | 468 420 | CBS |
| 2.0 | 244233 ; 244231 ; 245273 ; 245243 ; 244242 245242 ; 244243 ; 244273 | E | 1986 | B200E,B200F,B200K | M | +/- | | 09/82 ▸ 1993 | 86011244 | **810968** | 468 420 | CBS |
| 2.0 | 244-21 ; 244-24 | E | 1986 | B19A,B200E | A | +/- | | 03/79 ▸ 08/82 | 86011251 | •**810971** | 468 420 | CBS |
| 2.0 | 244277 ; 244247 ; 245277 | E | 1986 | B200E,B200F | A | +/- | | 09/82 ▸ 1993 | 86011251 | •**810971** | 468 420 | CBS |
| 2.0 | 244247 ; 245277 ; 244277 | E | 1986 | B200E,B200F | A | | | 09/82 ▸ 1993 | 13785902 | **732369** | 590 498 | ALB |
| 2.0 | 244-24 ; 244-4 ; 244-21 | E | 1986 | B19A,B200E | M | +/- | | 03/79 ▸ 08/82 | 86011244 | **810968** | 468 420 | CBS |
| 2.1,2.1 i | 242-44 ; 242-41 | E | 2127 | B21A,B21E | M | +/- | | 08/74 ▸ 07/79 | 86011244 | **810968** | 468 420 | CBS |
| 2.1 Turbo | 245462 ; 244462 | E | 2127 | B21ET | M | +/- | | 09/82 ▸ 06/85 | 86011244 | **810968** | 468 420 | CBS |
| 2.3 i | 242-34 | E | 2316 | B23E | M | +/- | | 03/79 ▸ 07/79 | 86011244 | **810968** | 468 420 | CBS |
| 2.3 | 244842 ; 245883 ; 245843 ; 244883 ; 245842 244843 ; 244833 ; 245833 | E | 2316 | B230E,B230F,B230FD,B23E | M | +/- | | 09/82 ▸ 1993 | 86011269 | **810970** | 468 420 | CBS |





• **New** Nouveau **Nuevo** Novo **Nuovo** Nieuw **Neu** Nowość **Yeni** Новый Νέο **Nový**

| | | Type Ctr. | CC | | AC | | | OE | Valeo | DIM. | TECH |
|---|---|---|---|---|---|---|---|---|---|---|---|
| **VOLVO** (.../...) | | | | | | | | | | | |
| **240-260 (.../...)** | | | | | | | | | | | |
| 2.3 | 245833 ; 244843 ; 245842 ; 245883 ; 244842 244883 ; 245843 ; 244833 | E | 2316 | B230E,B230F,B230FD,B23E | M | +/- | | 09/82 ▸ 1993 | 86011244 | **810968** | 468 420 | CBS |
| 2.3 | 244-84 | E | 2316 | B230E | A | +/- | | 03/79 ▸ 08/82 | 86011251 | **•810971** | 468 420 | CBS |
| 2.3 | 245847 | E | 2316 | B23E | A | +/- | | 09/82 ▸ 06/84 | 86011251 | **•810971** | 468 420 | CBS |
| 2.3 | 245847 | E | 2316 | B23E | A | | | 09/82 ▸ 06/84 | 13785902 | **732369** | 590 498 | ALB |
| 2.3 | 244 ; 244-84 | E | 2316 | B230E,B23A | M | +/- | | 03/79 ▸ 08/82 | 86011244 | **810968** | 468 420 | CBS |
| 2.3 | 264 | E | 2316 | B23A | M | +/- | | 08/80 ▸ 07/82 | 86011244 | **810968** | 468 420 | CBS |
| **340-360** | | | | | | | | | | | |
| 1.4 | 345523 ; 343531 ; 345531 ; 344533 ; 343533 343521 ; 345521 ; 343523 ; 345533 | E | 1397 | B14-40,B14-4E,B14-4S | M | | | 09/82 ▸ 07/91 | 32119828 | **731248** | 382 360 | CBS |
| 1.4 | 343500 | E | 1397 | B14 | A | | | 02/76 ▸ 08/82 | 32119828 | **731248** | 382 360 | CBS |
| 1.4 | 345500 | E | 1397 | B14 | A | | | 08/79 ▸ 08/82 | 32119828 | **731248** | 382 360 | CBS |
| 1.4 | 344530 ; 345520 ; 343520 ; 345530 ; 343530 | E | 1397 | B14-40,B14-4E | A | | | 09/82 ▸ 07/91 | 32119828 | **731248** | 382 360 | CBS |
| 1.4 | 345501 | E | 1397 | B14 | M | +/- | | 08/79 ▸ 08/82 | 32119828 | **731248** | 382 360 | CBS |
| 1.4 | 343501 | E | 1397 | B14 | A | +/- | | 08/79 ▸ 08/82 | 32119828 | **731248** | 382 360 | CBS |
| 2.0 | 344213 ; 343243 ; 345243 ; 344283 ; 344243 345283 ; 343213 ; 345213 ; 344233 ; 345233 | E | 1986 | B19A,B19E,B200E,B200K | M | - | | 09/82 ▸ 07/89 | 32949968 | | 550 346 | CBS |
| 2.0 | 344213 | E | 1986 | B200K | M | | | 07/84 ▸ 07/89 | 32949968 | | 550 346 | CBS |
| 2.0 | 344210 | E | 1986 | B200K | A | | | 07/85 ▸ 07/89 | 32949968 | | 550 346 | CBS |
| **440-460-480** | | | | | | | | | | | |
| 1.6 | LX173E | E | 1596 | B16F | M | + | TSW | 10/91 ▸ 06/97 | 90311630 | **810957** | 535 368 | CBS |
| 1.6 | LX173E | E | 1596 | B16F | M | - | TSW | 10/91 ▸ 06/97 | 90311622 | **810956** | 369 371 | CBS |
| 1.6 i | KX173E | E | 1596 | B16F | M | | TSW | 10/91 ▸ 06/97 | 90311622 | **810956** | 369 371 | CBS |
| 1.6 | LX173E | E | 1596 | B16F | M | | TSW | 10/91 ▸ 06/97 | 9031162 | **810956** | 369 371 | CBS |
| 1.6 | LX173E | E | 1596 | B16F | M | | TSW | 10/91 ▸ 06/97 | 9031163 | **810957** | 535 368 | CBS |
| 1.6 i | KX173E | E | 1596 | B16F | M | | TSW | 10/91 ▸ 06/97 | 90311630 | **810957** | 535 368 | CBS |
| 1.6 i | KX176E ; KX175E | E | 1596 | B16F | A | | TSW | 10/91 ▸ 06/97 | 90311630 | **810957** | 535 368 | CBS |
| 1.6 i | KX175E ; KX176E | E | 1596 | B16F | A | | TSW | 10/91 ▸ 06/97 | 90311622 | **810956** | 369 371 | CBS |
| 1.7 | EX183E ; EX173E ; EX143E ; EX053E ; EX083E | E | 1721 | B18E,B18ED,B18EP,B18F,B18FP | M | + | TSW | 07/86 ▸ 07/95 | 90311630 | **810957** | 535 368 | CBS |
| 1.7 i,1.7 i Turbo | LX183E ; LX063E LX143E | E | 1721 | B18EP,B18FP,B18FTM | M | + | TSW | 01/90 ▸ 1992 | 90311630 | **810957** | 535 368 | CBS |
| 1.7 i,1.7 i Turbo | LX063E ; LX143E LX183E | E | 1721 | B18EP,B18FP,B18FTM | M | - | TSW | 01/90 ▸ 1992 | 90311622 | **810956** | 369 371 | CBS |
| 1.7 i Turbo | EX193E ; EX063E | E | 1721 | B18FT,B18FTM | M | | TSW | 04/88 ▸ 07/95 | 90311630 | **810957** | 535 368 | CBS |
| 551751 ▸ | | | | | | | | | | | | |
| 1.7 i,1.7 i Turbo | KX193E ; KX143E KX063E ; KX183E | E | 1721 | B18EP,B18FP,B18FT,B18FTM | M | | TSW | 10/88 ▸ 06/95 | 9031163 | **810957** | 535 368 | CBS |
| 1.7 i,1.7 i Turbo | KX143E ; KX193E KX183E ; KX063E | E | 1721 | B18EP,B18FP,B18FT,B18FTM | M | | TSW | 10/88 ▸ 06/95 | 90311630 | **810957** | 535 368 | CBS |
| 1.7 i,1.7 i Turbo | KX063E ; KX183E KX143E ; KX193E | E | 1721 | B18EP,B18FP,B18FT,B18FTM | M | | TSW | 10/88 ▸ 06/95 | 9031162 | **810956** | 369 371 | CBS |
| 1.7 i,1.7 i Turbo | KX063E ; KX143E KX183E ; KX193E | E | 1721 | B18EP,B18FP,B18FT,B18FTM | M | | TSW | 10/88 ▸ 06/95 | 90311622 | **810956** | 369 371 | CBS |
| 1.7 i,1.7 i Turbo | LX143E ; LX183E LX063E | E | 1721 | B18EP,B18FP,B18FTM | M | | TSW | 01/90 ▸ 1992 | 9031162 | **810956** | 369 371 | CBS |
| 1.7 i,1.7 i Turbo | LX183E ; LX143E LX063E | E | 1721 | B18EP,B18FP,B18FTM | M | | TSW | 01/90 ▸ 1992 | 9031163 | **810957** | 535 368 | CBS |
| 1.7 | EX085E ; EX145E | E | 1721 | B18E,B18EP | A | + | TSW | 07/86 ▸ 07/95 | 90311630 | **810957** | 535 368 | CBS |
| 1.7 i | LX185E ; LX145E | E | 1721 | B18EP,B18FP | A | + | TSW | 01/90 ▸ 1992 | 90311630 | **810957** | 535 368 | CBS |
| 1.7 i | LX145E ; LX185E | E | 1721 | B18EP,B18FP | A | - | TSW | 01/90 ▸ 1992 | 90311622 | **810956** | 369 371 | CBS |
| 1.7 | EX085E ; EX145E | E | 1721 | B18E,B18EP | A | | TSW | 07/86 ▸ 07/95 | 90311622 | **810956** | 369 371 | CBS |
| 1.7 i,1.7 i Turbo | KX196E ; KX195E KX065E ; KX145E ; KX066E ; KX186E ; KX185E | E | 1721 | B18EP,B18FP,B18FT,B18FTM | A | | TSW | 10/88 ▸ 06/97 | 90311622 | **810956** | 369 371 | CBS |
| 1.7 i | KX145E ; KX185E | E | 1721 | B18EP,B18FP | A | | TSW | 10/88 ▸ 1992 | 9031162 | **810956** | 369 371 | CBS |
| 1.7 i | KX185E ; KX145E | E | 1721 | B18EP,B18FP | A | | TSW | 10/88 ▸ 1992 | 9031163 | **810957** | 535 368 | CBS |
| 1.7 i,1.7 i Turbo | KX185E ; KX066E KX065E ; KX186E ; KX196E ; KX145E ; KX195E | E | 1721 | B18EP,B18FP,B18FT,B18FTM | A | | TSW | 10/88 ▸ 06/97 | 90311630 | **810957** | 535 368 | CBS |
| 1.7 i | LX185E ; LX145E | E | 1721 | B18EP,B18FP | A | | TSW | 01/90 ▸ 1992 | 9031162 | **810956** | 369 371 | CBS |
| 1.7 i Turbo | EX065E | E | 1721 | B18FTM | A | | TSW | 01/90 ▸ 07/95 | 90311630 | **810957** | 535 368 | CBS |
| 1.7 i | LX185E ; LX145E | E | 1721 | B18EP,B18FP | A | | TSW | 01/90 ▸ 1992 | 9031163 | **810957** | 535 368 | CBS |
| 1.7,1.7 i Turbo | EX063E ; EX193E EX053E ; EX173E ; EX083E ; EX183E ; EX143E | E | 1721 | B18E,B18ED,B18EP,B18F,B18FP B18FT,B18FTM | M | | TSW | 07/86 ▸ 07/95 | 90311622 | **810956** | 369 371 | CBS |
| ▸ 551750 | | | | | | | | | | | | |
| 1.7 | LX023E | E | 1783 | B18KP | M | + | TSW | 01/90 ▸ 1992 | 90311630 | **810957** | 535 368 | CBS |
| 1.7 | LX023E | E | 1783 | B18KP | M | - | TSW | 01/90 ▸ 1992 | 90311622 | **810956** | 369 371 | CBS |
| 1.7 | KX033E ; KX023E ; KX073E ; KX013E | E | 1783 | B18K,B18KD,B18KP,B18KPD | M | | TSW | 10/88 ▸ 06/95 | 90311622 | **810956** | 369 371 | CBS |
| 1.7 | KX013E ; KX023E ; KX073E ; KX033E | E | 1783 | B18K,B18KD,B18KP,B18KPD | M | | TSW | 10/88 ▸ 06/95 | 90311630 | **810957** | 535 368 | CBS |
| 1.7 | KX013E ; KX023E | E | 1783 | B18K,B18KP | M | | TSW | 10/88 ▸ 1992 | 9031162 | **810956** | 369 371 | CBS |

# VOLVO (.../...)

## 440-460-480 (.../...)

| | | | CC | | | AC | | | OE | Valeo | DIM. | TECH |
|---|---|---|---|---|---|---|---|---|---|---|---|---|
| 1.7 | KX013E ; KX023E | E | 1783 | B18K,B18KP | M | | TSW | 10/88 ▸ 1992 | 9031163 | **810957** | 535 368 | CBS |
| 1.7 | LX023E | E | 1783 | B18KP | M | | TSW | 01/90 ▸ 1992 | 9031162 | **810956** | 369 371 | CBS |
| 1.7 | LX023E | E | 1783 | B18KP | M | | TSW | 01/90 ▸ 1992 | 9031163 | **810957** | 535 368 | CBS |
| 1.7 | KX025E ; KX015E ; KX035E ; KX075E | E | 1783 | B18K,B18KD,B18KP,B18KPD | A | | TSW | 07/89 ▸ 06/95 | 90311622 | **810956** | 369 371 | CBS |
| 1.7 | KX025E ; KX075E ; KX015E ; KX035E | E | 1783 | B18K,B18KD,B18KP,B18KPD | A | | TSW | 07/89 ▸ 06/95 | 90311630 | **810957** | 535 368 | CBS |
| 1.8 i | LX163E | E | 1794 | B18U | M | + | TSW | 10/91 ▸ 06/95 | 90311630 | **810957** | 535 368 | CBS |
| 1.8 i | LX163E | E | 1794 | B18U | M | - | TSW | 10/91 ▸ 06/95 | 90311622 | **810956** | 369 371 | CBS |
| 1.8 i | LX163E | E | 1794 | B18U | M | | TSW | 10/91 ▸ 06/95 | 9031162 | **810956** | 369 371 | CBS |
| 1.8 i | LX163E | E | 1794 | B18U | M | | TSW | 10/91 ▸ 06/95 | 9031163 | **810957** | 535 368 | CBS |
| 1.8 i | KX163E ; KX153E | E | 1794 | B18U,B18U-200 | M | | TSW | 10/91 ▸ 06/97 | 90311630 | **810957** | 535 368 | CBS |
| 1.8 i | KX153E ; KX163E | E | 1794 | B18U,B18U-200 | M | | TSW | 10/91 ▸ 06/97 | 9031163 | **810957** | 535 368 | CBS |
| 1.8 i | KX153E ; KX163E | E | 1794 | B18U,B18U-200 | M | | TSW | 10/91 ▸ 06/97 | 90311622 | **810956** | 369 371 | CBS |
| 1.8 i | KX156E ; KX166E ; KX155E ; KX165E | E | 1794 | B18U,B18U-200 | A | | TSW | 10/91 ▸ 06/97 | 90311622 | **810956** | 369 371 | CBS |
| 1.8 i | KX156E ; KX155E ; KX166E ; KX165E | E | 1794 | B18U,B18U-200 | A | | TSW | 10/91 ▸ 06/97 | 90311630 | **810957** | 535 368 | CBS |
| 1.8 i | KX166E ; KX156E | E | 1794 | B18U,B18U-200 | A | | TSW | 08/94 ▸ 06/97 | 9031163 | **810957** | 535 368 | CBS |
| 1.8 i | KX166E ; KX156E | E | 1794 | B18U,B18U-200 | A | | TSW | 08/94 ▸ 06/97 | 9031162 | **810956** | 369 371 | CBS |
| 2.0 | EX313E | E | 1998 | B20F | M | + | TSW | 10/92 ▸ 07/95 | 90311630 | **810957** | 535 368 | CBS |
| 2.0 | LX313E | E | 1998 | B20F | M | + | TSW | 07/93 ▸ 06/97 | 90311630 | **810957** | 535 368 | CBS |
| 2.0 | LX313E | E | 1998 | B20F | M | - | TSW | 07/93 ▸ 06/97 | 90311622 | **810956** | 369 371 | CBS |
| 2.0 | EX313E | E | 1998 | B20F | M | | TSW | 10/92 ▸ 07/95 | 90311622 | **810956** | 369 371 | CBS |
| 2.0 i | KX313E | E | 1998 | B20F | M | | TSW | 10/92 ▸ 06/97 | 90311630 | **810957** | 535 368 | CBS |
| 2.0 i | KX313E | E | 1998 | B20F | M | | TSW | 10/92 ▸ 06/97 | 9031162 | **810956** | 369 371 | CBS |
| 2.0 | LX313E | E | 1998 | B20F | M | | TSW | 07/93 ▸ 06/97 | 9031162 | **810956** | 369 371 | CBS |
| 2.0 | LX313E | E | 1998 | B20F | M | | TSW | 07/93 ▸ 06/97 | 9031163 | **810957** | 535 368 | CBS |
| 2.0 | EX315E | E | 1998 | B20F | A | + | TSW | 10/92 ▸ 07/95 | 90311630 | **810957** | 535 368 | CBS |
| 2.0 | LX315E | E | 1998 | B20F | A | + | TSW | 07/93 ▸ 06/97 | 90311630 | **810957** | 535 368 | CBS |
| 2.0 | LX315E | E | 1998 | B20F | A | - | TSW | 07/93 ▸ 06/97 | 90311622 | **810956** | 369 371 | CBS |
| 2.0 i | KX315E | E | 1998 | B20F | A | | TSW | 10/92 ▸ 06/97 | 9031162 | **810956** | 369 371 | CBS |
| 2.0 | EX315E | E | 1998 | B20F | A | | TSW | 10/92 ▸ 07/95 | 90311622 | **810956** | 369 371 | CBS |
| 2.0 i | KX315E ; KX316E | E | 1998 | B20F | A | | TSW | 10/92 ▸ 06/97 | 90311622 | **810956** | 369 371 | CBS |
| 2.0 i | KX315E | E | 1998 | B20F | A | | TSW | 10/92 ▸ 06/97 | 9031163 | **810957** | 535 368 | CBS |
| 2.0 i | KX315E ; KX316E | E | 1998 | B20F | A | | TSW | 10/92 ▸ 06/97 | 90311630 | **810957** | 535 368 | CBS |
| 2.0 | LX315E | E | 1998 | B20F | A | | TSW | 07/93 ▸ 06/97 | 9031162 | **810956** | 369 371 | CBS |
| 2.0 | LX315E | E | 1998 | B20F | A | | TSW | 07/93 ▸ 06/97 | 9031163 | **810957** | 535 368 | CBS |
| 1.9 TD | LX793E ; LX703E | D | 1870 | D19T,D19TEGR | M | + | TSW | 07/94 ▸ 06/97 | 90311630 | **810957** | 535 368 | CBS |
| 1.9 TD | LX703E ; LX793E | D | 1870 | D19T,D19TEGR | M | | TSW | 07/94 ▸ 06/97 | 9031163 | **810957** | 535 368 | CBS |
| 1.9 TD | KX793E ; KX703E | D | 1870 | D19T,D19TEGR | M | | TSW | 07/94 ▸ 06/97 | 9031163 | **810957** | 535 368 | CBS |
| 1.9 TD | KX703E ; KX793E | D | 1870 | D19T,D19TEGR | M | | TSW | 07/94 ▸ 06/97 | 90311630 | **810957** | 535 368 | CBS |
| 1.9 TD | KX795E ; KX796E<br>KX706E ; KX705E | D | 1870 | D19T,D19TEGR | A | | TSW | 07/94 ▸ 06/97 | 90311630 | **810957** | 535 368 | CBS |

## 740-760-780

| | | | | | | | | | | | | |
|---|---|---|---|---|---|---|---|---|---|---|---|---|
| 2.0,2.0 16V,2.0 Turbo 16V<br>2.0 Turbo Intercooler | 744203 ; 745282<br>745293 ; 745243<br>744273 ; 704243 ; 744233 ; 744262 ; 745262<br>744243 ; 745203 ; 744293 ; 745252 ; 745233<br>745273 | E | 1986 | B200E,B200F,B200FT,B200G<br>B200K,B204E,B204FT,B204GT | M | + | | 07/84 ▸ 08/92 | 86038528 | **732368** | 590 498 | ALB |
| 2.0,2.0 16V | 744243 ; 745273<br>744233 ; 745243 ; 745233 ; 744293 ; 745203<br>744273 ; 745293 ; 744203 ; 704243 | E | 1986 | B200E,B200F,B200G,B200K,B204E | M | - | | 07/84 ▸ 08/92 | 86011244 | **810968** | 468 420 | CBS |
| 2.0 Turbo,2.0 Turbo 16V | 704262 ; 744252<br>744282 ; 744262 | E | 1986 | B200ET,B204FT,B204GT | M | - | | 07/84 ▸ 07/90 | 86038536 | **732369** | 590 498 | ALB |
| 2.0 Turbo,2.0 Turbo 16V | 744252 ; 744262<br>744282 ; 704262 | E | 1986 | B200ET,B204FT,B204GT | M | - | | 07/84 ▸ 07/90 | 86038528 | **732368** | 590 498 | ALB |
| 2.0 Turbo | 782262 | E | 1986 | B200ET | M | | | 03/85 ▸ 07/89 | 50030063 | **810970** | 468 420 | CBS |
| 2.0 | 745247 ; 745237 ; 744237 ; 744247 ; 704247<br>744277 ; 745277 | E | 1986 | B200E,B200F,B200K | A | + | | 07/84 ▸ 07/91 | 86038536 | **732369** | 590 498 | ALB |
| 2.0 | 745277 ; 704247 ; 745247 ; 744247 ; 744237<br>744277 ; 745237 | E | 1986 | B200E,B200F,B200K | A | - | | 07/84 ▸ 07/91 | 86011251 | **•810971** | 468 420 | CBS |
| 2.3 Turbo<br>2.3 Turbo Intercooler | 764872 ; 704862<br>764862 | E | 2316 | B230ET,B230FT | M | +/- | | 07/83 ▸ 1990 | 50035054 | **•810971** | 468 420 | CBS |
| 2.3 Turbo<br>2.3 Turbo Intercooler | 704862 ; 764862 | E | 2316 | B230ET | M | +/- | | 07/83 ▸ 1990 | 86011244 | **810968** | 468 420 | CBS |
| 2.3 Turbo Intercooler | 764872 | E | 2316 | B230FT | M | +/- | | 07/88 ▸ 1990 | 50030063 | **810970** | 468 420 | CBS |
| 2.3,2.3 16V,2.3 Turbo<br>2.3 Turbo Intercooler | 704842 ; 744883<br>745813 ; 744892<br>745883 ; 745872 ; 744822 ; 745842 ; 745862<br>744872 ; 744862 ; 744833 ; 744813 ; 745822<br>744853 ; 745802 ; 744842 ; 744802 ; 745833<br>745853 ; 745892 | E | 2316 | B230A,B230E,B230ET,B230F<br>B230FB,B230FT,B230FTX,B230G<br>B230GT,B230K,B234F | M | + | | 07/84 ▸ 08/92 | 86038528 | **732368** | 590 498 | ALB |

Radiator Radiateur Motorkühler Radiatore di raffreddamento Radiator Radyatör Radiator Радиатор vízhűtő Vodní chladič Radiator Ψυγείο



• **New** Nouveau **Nuevo** Novo **Nuovo** Nieuw **Neu** Nowość **Yeni** Новый Νέο **Nový**

# VOLVO (.../...)

## 740-760-780 (.../...)

| | | | | | | | | | | | | |
|---|---|---|---|---|---|---|---|---|---|---|---|---|
| 2.3,2.3 16V | 745813 ; 704842<br>744883 ; 745833 ; 745892 ; 744853 ; 744892<br>744813 ; 745853 ; 744842 ; 744833 ; 745802<br>745842 ; 744802 ; 745883 | E | 2316 | B230A,B230E,B230F,B230FB<br>B230G,B230K,B234F | M | - | | 07/84 ▸ 08/92 | 86011244 | **810968** | 468 420 | CBS |
| 2.3 Turbo<br>2.3 Turbo Intercooler | 704862 ; 764862 | E | 2316 | B230ET | M | | | 07/83 ▸ 1990 | 50013341 | **810968** | 468 420 | CBS |
| 2.3 Turbo<br>2.3 Turbo Intercooler | 704865 ; 764865 | E | 2316 | B230ET | A | +/- | | 07/83 ▸ 1988 | 50035054 | **•810971** | 468 420 | CBS |
| 2.3 | 745845 ; 744855 ; 744845 ; 745855 ; 745886<br>744886 ; 704845 | E | 2316 | B230E,B230F,B230FB | A | + | | 07/84 ▸ 08/92 | 86038536 | **732369** | 590 498 | ALB |
| 2.3 | 704845 ; 744845 ; 745886 ; 744855 ; 744886<br>745845 ; 745855 | E | 2316 | B230E,B230F,B230FB | A | - | | 07/84 ▸ 08/92 | 86011251 | **•810971** | 468 420 | CBS |
| 2.3 Turbo<br>2.3 Turbo Intercooler | 704865 ; 764865 | E | 2316 | B230ET | A | | | 07/83 ▸ 1988 | 50018522 | **•810971** | 468 420 | CBS |
| 2.3 Turbo Intercooler | 764876 | E | 2316 | B230FT | M | +/- | | 07/88 ▸ 1990 | 50035054 | **•810971** | 468 420 | CBS |
| 2.8 | 704687 ; 765697 ; 764687 ; 765687 ; 764697 | E | 2849 | B280E,B280EC,B280F,B280FC<br>B28E | A | +/- | | 02/82 ▸ 07/87 | 50028364 | | 590 410 | CBS |
| 2.8 | 764697 ; 704687 ; 765687 ; 764687 ; 765697 | E | 2849 | B280E,B280EC,B280F,B280FC<br>B28E | A | + | | 02/82 ▸ 1990 | 13288311 | | | |
| 2.8 V6 | 782687 ; 782697 | E | 2849 | B280EC,B280F | A | | | 03/85 ▸ 07/91 | 13288311 | | | |
| 2.4 TD | 764762 ; 704762 | D | 2383 | D24T,D24T-109 | M | +/- | | 02/82 ▸ 06/87 | 86036761 | | 602 501 | ALB |
| 2.4 D | 744773 ; 704773 ; 745773 | D | 2383 | D24 | M | +/- | | 07/84 ▸ 08/92 | 86022472 | | 590 509 | ALB |
| 2.4 TD | 745762 ; 744762<br>745752 | D | 2383 | D24T,D24TIC | M | +/- | | 07/85 ▸ 08/91 | 86036761 | | 602 501 | ALB |
| 2.4 TD Intercooler | 764752 ; 765752 | D | 2383 | D24TIC | M | +/- | | 07/87 ▸ 1990 | 86036753 | | 590 509 | ALB |
| 2.4 TD | 745752 ; 744752 | D | 2383 | D24TIC | M | +/- | | 07/87 ▸ 08/92 | 86036753 | | 590 509 | ALB |
| 2.4 TD | 764762 ; 704762 | D | 2383 | D24T,D24T-109 | M | | | 02/82 ▸ 06/87 | 50036763 | | 602 501 | ALB |
| 2.4 TD Intercooler | 782752 | D | 2383 | D24TICEGR | M | | | 03/85 ▸ 07/91 | 86036753 | | 590 509 | ALB |
| 2.4 TD Intercooler | 765752 ; 764752 | D | 2383 | D24TIC | M | | | 07/87 ▸ 1990 | 50036755 | | 590 509 | ALB |
| 2.4 TD,2.4 TD Intercooler | 704765 ; 764755<br>764765 | D | 2383 | D24T,D24T-109,D24TIC | A | +/- | | 02/82 ▸ 1990 | 86036761 | | 602 501 | ALB |
| 2.4 TD | 744765 ; 745765<br>745755 ; 744755 | D | 2383 | D24T,D24TIC | A | +/- | | 07/85 ▸ 08/92 | 86036761 | | 602 501 | ALB |
| 2.4 TD,2.4 TD Intercooler | 704765 ; 764755<br>764765 | D | 2383 | D24T,D24T-109,D24TIC | A | | | 02/82 ▸ 1990 | 50036763 | | 602 501 | ALB |

## 850

| | | | | | | | | | | | | |
|---|---|---|---|---|---|---|---|---|---|---|---|---|
| 2.0 10V,2.0 20V | LS4502 ; LW4502<br>LW4122 ; LS4122 | E | 1984 | B5202FS,B5204FS | M | | | 06/91 ▸ 12/96 | 86013539 | **•731477** | 588 383 | CBS |
| 2.0 Turbo 20V | LS4702 ; LW4702 | E | 1984 | B5204T2 | M | | | 01/94 ▸ 12/96 | 8602566 | **732365** | 588 383 | CBS |
| 2.0 10V,2.0 20V | LW4506 ; LS4126<br>LW4126 ; LS4506 | E | 1984 | B5202FS,B5204FS | A | | | 06/91 ▸ 12/96 | 86013547 | | 590 383 | CBS |
| 2.0 Turbo 20V | LW4706 ; LS4706 | E | 1984 | B5204T2 | A | | | 01/94 ▸ 12/96 | 86013562 | | 588 383 | CBS |
| 2.3 Turbo,2.3 Turbo 20V | LS5702 ; LW5702<br>LS5802 ; LW5802 | E | 2318 | B5234T,B5234T5 | M | | | 03/93 ▸ 12/96 | 8602566 | **732365** | 588 383 | CBS |
| 2.3 Turbo | LW5706 | E | 2318 | B5234T | A | | | 03/93 ▸ 12/96 | 8602566 | **732365** | 588 383 | CBS |
| 2.3 Turbo,2.3 Turbo 20V | LS5806 ; LW5806<br>LS5706 | E | 2318 | B5234T,B5234T5 | A | | | 03/93 ▸ 12/96 | 8602562 | | 588 383 | CBS |
| 2.3 Turbo 20V | LW5806 ; LS5806 | E | 2318 | B5234T5 | A | | | 04/94 ▸ 08/95 | 86013562 | | 588 383 | CBS |
| 2.5 10V,2.5 20V | LS5102 ; LW5502<br>LW5102 ; LS5502 | E | 2435 | B5252FS,B5254FS | M | | | 06/91 ▸ 12/96 | 86013539 | **•731477** | 588 383 | CBS |
| 2.5 i Turbo 20V | LW5602 | E | 2435 | B5254T | M | | | 06/96 ▸ 12/96 | 8602566 | **732365** | 588 383 | CBS |
| 2.5 10V,2.5 20V | LW5506 ; LW5106<br>LS5106 ; LS5506 | E | 2435 | B5252FS,B5254FS | A | | | 06/91 ▸ 12/96 | 86013547 | | 590 383 | CBS |
| 2.5 TDi 10V | LW7202 ; LS7202 | D | 2461 | D5252T | M | | | 02/96 ▸ 12/96 | 86013570 | **•731477** | 588 383 | CBS |

## 940-960

| | | | | | | | | | | | | |
|---|---|---|---|---|---|---|---|---|---|---|---|---|
| 2.0 Turbo 16V | 945252 ; 944252 | E | 1986 | B204FT | M | +/- | | 09/90 ▸ 06/98 | 86037157 | | | |
| 2.0 Turbo 16V | 964252 | E | 1986 | B204FT | M | +/- | | 1992 ▸ 08/94 | 86037157 | | | |
| 2.0 Turbo | 945212 ; 944212 | E | 1986 | B200FT | M | + | | 1992 ▸ 06/98 | 86038528 | **732368** | 590 498 | ALB |
| 2.0,2.0 16V | 944203 ; 945292<br>944292 ; 944272 ; 945203 ; 945273 | E | 1986 | B200F,B200G,B204E | M | + | | 09/91 ▸ 08/94 | 86038544 | **732366** | 590 419 | ALB |
| 2.0 Turbo,2.0 Turbo 16V | 965252 ; 965212<br>964212 | E | 1986 | B200FT,B204FT | M | + | | 09/92 ▸ 08/96 | 86038528 | **732368** | 590 498 | ALB |
| 2.0,2.0 16V | 945243 ; 944272<br>945292 ; 944243 ; 944203 ; 944292 ; 945273<br>945203 | E | 1986 | B200E,B200F,B200G,B204E | M | - | | 09/90 ▸ 08/94 | 86011244 | **810968** | 468 420 | CBS |
| 2.0,2.0 16V,2.0 Turbo | 945212 ; 944203<br>945273 ; 945292 ; 944292 ; 944212 ; 944272<br>945203 | E | 1986 | B200F,B200FT,B200G,B204E | M | - | | 09/91 ▸ 06/98 | 86011269 | **810970** | 468 420 | CBS |

# VOLVO (.../...)

## 940-960 (.../...)

| | | CC | | | AC | | | OE | Valeo | DIM. | TECH |
|---|---|---|---|---|---|---|---|---|---|---|---|
| 2.0 Turbo,2.0 Turbo 16V 965212 ; 965252 964212 | E | 1986 | B200FT,B204FT | M | - | | 09/92 ▸ 08/96 | 86011269 | **810970** | 468 420 | CBS |
| 2.0 945207 | E | 1986 | B200G | A | +/- | | 09/91 ▸ 1994 | 13785902 | **732369** | 590 498 | ALB |
| 2.0 945277 | E | 1986 | B200F | A | + | | 09/90 ▸ 1994 | 13785902 | **732369** | 590 498 | ALB |
| 2.0 945247 ; 944247 ; 945207 ; 944277 ; 944207 945277 | E | 1986 | B200E,B200F,B200G | A | - | | 09/90 ▸ 08/94 | 86011251 | **•810971** | 468 420 | CBS |
| 2.0 945207 ; 944207 ; 944277 ; 945277 | E | 1986 | B200F,B200G | A | - | | 09/91 ▸ 08/94 | 86011277 | **•810971** | 468 420 | CBS |
| 2.3 Turbo 964822 ; 965872 965843 ; 964843 ; 964872 ; 965822 | E | 2316 | B230FT,B230GK,B230GT | M | + | | 09/91 ▸ 08/96 | 86038528 | **732368** | 590 498 | ALB |
| 2.3,2.3 16V 945853 ; 944833 944853 ; 945892 ; 945812 ; 945802 ; 945833 944802 | E | 2316 | B230FB,B230FD,B230G,B234F B234G | M | + | | 09/91 ▸ 06/98 | 86038544 | **732366** | 590 419 | ALB |
| 2.3 Turbo 944843 ; 944811 945872 ; 945843 ; 944813 ; 944872 ; 945811 | E | 2316 | B230FK,B230FT,B230GK | M | + | | 1992 ▸ 06/98 | 86038528 | **732368** | 590 498 | ALB |
| 2.3,2.3 16V 945892 ; 944853 945833 ; 945853 ; 944833 ; 944812 ; 944802 945802 ; 945812 ; 944892 | E | 2316 | B230FB,B230FD,B230G,B234F B234G | M | - | | 09/90 ▸ 06/98 | 86011244 | **810968** | 468 420 | CBS |
| 2.3 Turbo 964822 ; 965822 964872 ; 965872 ; 964843 ; 965843 | E | 2316 | B230FT,B230GK,B230GT | M | - | | 09/91 ▸ 08/96 | 86011269 | **810970** | 468 420 | CBS |
| 2.3,2.3 16V,2.3 Turbo 944802 ; 944811 944872 ; 945802 ; 945853 ; 944892 ; 944812 945811 ; 944843 ; 945872 ; 944813 ; 945812 944853 ; 945892 ; 945833 ; 945843 ; 944833 | E | 2316 | B230FB,B230FD,B230FK,B230FT B230G,B230GK,B234F,B234G | M | - | | 1992 ▸ 06/98 | 86011269 | **810970** | 468 420 | CBS |
| 2.3 Turbo 965875 ; 964875 | E | 2316 | B230FT | A | +/- | | 09/90 ▸ 1992 | 13785902 | **732369** | 590 498 | ALB |
| 2.3 Turbo 964875 ; 964825 965825 ; 965875 | E | 2316 | B230FT,B230GT | A | + | | 08/91 ▸ 08/96 | 86038536 | **732369** | 590 498 | ALB |
| 2.3 Turbo 945845 ; 945816 944816 ; 944845 | E | 2316 | B230FK,B230GK | A | + | | 09/94 ▸ 06/98 | 86038536 | **732369** | 590 498 | ALB |
| 2.3 945855 ; 944805 ; 944855 ; 944836 ; 945836 945805 | E | 2316 | B230FB,B230FD,B230G | A | - | | 09/90 ▸ 06/98 | 86011251 | **•810971** | 468 420 | CBS |
| 2.3 Turbo 964875 ; 965825 964825 ; 965875 | E | 2316 | B230FT,B230GT | A | - | | 08/91 ▸ 08/96 | 86011277 | **•810971** | 468 420 | CBS |
| 2.3,2.3 Turbo 945855 ; 945845 944805 ; 945836 ; 945816 ; 944855 ; 945805 944836 ; 944845 ; 944816 | E | 2316 | B230FB,B230FD,B230FK,B230G B230GK | A | - | | 09/91 ▸ 06/98 | 86011277 | **•810971** | 468 420 | CBS |
| 2.3 Turbo 965875 | E | 2316 | B230FT | A | - | | 1992 ▸ 08/96 | 86011251 | **•810971** | 468 420 | CBS |
| 2.5 965991 ; 964931 ; 965931 ; 964991 | E | 2473 | B6254F,B6254G | M | +/- | | 09/94 ▸ 08/96 | 86010170 | | 590 498 | ALB |
| 2.5 965936 ; 964936 ; 964996 ; 965996 | E | 2473 | B6254F,B6254G | A | +/- | | 09/94 ▸ 08/96 | 86037397 | | 590 498 | ALB |
| 2.8 i 964686 ; 964696 | E | 2849 | B280E,B280F | A | +/- | | 09/90 ▸ 08/91 | 13288311 | | | |
| 3.0 24V 965956 ; 965986 | E | 2922 | B6304F,B6304G | A | +/- | | 09/90 ▸ 1994 | 13975610 | | 590 498 | ALB |
| 3.0 24V 964956 ; 964986 965956 ; 965986 | E | 2922 | B6304F,B6304G | A | +/- | | 01/94 ▸ 08/96 | 86037397 | | 590 498 | ALB |
| 2.4 TD 944742 ; 944763 944753 ; 945752 ; 945742 ; 945741 ; 944741 944762 ; 944752 ; 945753 ; 945762 | D | 2383 | D24T,D24TIC,D24TICEGR | M | +/- | | 09/90 ▸ 06/98 | 86036753 | | 590 509 | ALB |
| 2.4 TD 964742 ; 965752 965742 ; 964752 | D | 2383 | D24TIC,D24TICEGR | M | +/- | | 09/90 ▸ 08/96 | 86036753 | | 590 509 | ALB |
| 2.4 TD 964745 ; 965755 964755 ; 965745 | D | 2383 | D24TIC,D24TICEGR | A | +/- | | 09/90 ▸ 08/96 | 86036761 | | 602 501 | ALB |
| 2.4 TD 944745 ; 944765 945745 ; 944755 ; 945755 ; 945763 | D | 2383 | D24T,D24TIC,D24TICEGR | A | +/- | | 09/90 ▸ 06/98 | 86036761 | | 602 501 | ALB |

## C30

| | | | | | | | | | | | |
|---|---|---|---|---|---|---|---|---|---|---|---|
| 1.8 i Flexifuel 16V | F | 1798 | B4184S8 | M | +/- | | 10/06 ▸ | 8603621 | **734320** | 670 377,5 | ALB |
| 1.6 i 16V | E | 1596 | B4164S3 | M | +/- | | 10/06 ▸ | 8603621 | **734320** | 670 377,5 | ALB |
| 1.8 i 16V | E | 1798 | B4184S11 | M | +/- | | 10/06 ▸ 11/09 | 8603621 | **734320** | 670 377,5 | ALB |
| 2.0 i 16V | E | 1999 | B4204S3 | M | +/- | | 10/06 ▸ | 8603621 | **734320** | 670 377,5 | ALB |
| 2.0 i 16V | E | 1999 | B4204S3 | A | +/- | | 10/06 ▸ | 8603621 | **734320** | 670 377,5 | ALB |
| 1.6 D Turbo 16V | D | 1560 | D4164T | M | +/- | | 10/06 ▸ | 8603811 | **734321** | 670 377,5 | ALB |
| 2.0 D Turbo 16V | D | 1998 | D4204T | M | +/- | | 10/06 ▸ 03/10 | 8603811 | **734321** | 670 377,5 | ALB |

## S40 (95>2004)

| | | | | | | | | | | | |
|---|---|---|---|---|---|---|---|---|---|---|---|
| 1.8 i Bi-Fuel 16V | F | 1783 | B4184S10,B4184S9 | M | | | 01/01 ▸ 03/04 | 8601843 | **734320** | 670 377,5 | ALB |
| 1.6 i 16V VS ; VS1113 | E | 1587 | B4164S,B4164S-D3,B4164S2 | M | | | 01/97 ▸ 12/99 | 86020658 | **732524** | 654 400 | ALB |
| 1.6 i 16V VS ; VS1113 | E | 1587 | B4164S,B4164S-D3,B4164S2 | M | | | 01/97 ▸ 03/04 | 8601843 | **734320** | 670 377,5 | ALB |
| 1.8 i 16V VS1213 ; VS | E | 1731 | B4184S,B4184S-D3 | M | | | 10/95 ▸ 08/99 | 86020658 | **732524** | 654 400 | ALB |
| 1.8 i 16V VS1216 ; VS | E | 1731 | B4184S,B4184S-D3 | A | | | 10/95 ▸ 08/99 | 86020658 | **732524** | 654 400 | ALB |
| 1.8 i 16V VS | E | 1783 | B4184S2,B4184S3 | M | | | 04/99 ▸ 03/04 | 8601843 | **734320** | 670 377,5 | ALB |
| 1.8 i 16V VS | E | 1783 | B4184S2,B4184S3 | M | | | 04/99 ▸ 12/99 | 86020658 | **732524** | 654 400 | ALB |
| 1.8 i 16V VS | E | 1783 | B4184S2,B4184S3 | A | | | 04/99 ▸ 03/04 | 8601843 | **734320** | 670 377,5 | ALB |

Radiator Radiateur Motorkühler Radiatore di raffreddamento Radiator Radyatör Radiator Radiador Радиатор vízhűtő Vodní chladič Radiator Ψυγείο



• **New** Nouveau **Nuevo** Novo **Nuovo** Nieuw **Neu** Nowość **Yeni** Новый Νέο **Novy**

# VOLVO (.../...)

## S40 (95>2004) (.../...)

| | | | CC | | AC | | | | Valeo | DIM. | TECH |
|---|---|---|---|---|---|---|---|---|---|---|---|
| 1.8 i 16V | VS | E | 1783 | B4184S2,B4184S3 | A | | | 04/99 ▸ 12/99 | 86020658 | **732524** | 654 400 | ALB |
| 1.8 i 16V | VS | E | 1834 | B4184SM | M | | | 03/98 ▸ 03/04 | 8601843 | **734320** | 670 377,5 | ALB |
| 1.8 i 16V | VS | E | 1834 | B4184SJ,B4184SM | M | | | 03/98 ▸ 03/04 | 86020658 | **732524** | 654 400 | ALB |
| 1.8 i 16V | VS | E | 1834 | B4184SM | A | | | 03/98 ▸ 12/99 | 86020658 | **732524** | 654 400 | ALB |
| 1.8 i 16V | VS | E | 1834 | B4184SM | A | | | 03/98 ▸ 03/04 | 8601843 | **734320** | 670 377,5 | ALB |
| 1.9 i 16V,1.9 i Turbo 16V | VS | E | 1855 | B4194T,B4194T2 | M | +/- | | 05/97 ▸ 12/00 | 8602116 | **732372** | 623 331 | ALB |
| 1.9 i Turbo 16V | VS | E | 1855 | B4194T | A | +/- | | 05/97 ▸ 07/00 | 8602117 | **732372** | 623 331 | ALB |
| 2.0 i Turbo 16V | VS | E | 1948 | B4204T,B4204T3,B4204T5 | M | +/- | | 11/97 ▸ 03/04 | 8602116 | **732372** | 623 331 | ALB |
| 2.0 i 16V | VS1613 ; VS | E | 1948 | B4204S,B4204S2 | M | | | 10/95 ▸ 03/04 | 8601843 | **734320** | 670 377,5 | ALB |
| 2.0 i 16V | VS ; VS1613 | E | 1948 | B4204S,B4204S2 | M | | | 10/95 ▸ 12/99 | 86020658 | **732524** | 654 400 | ALB |
| 2.0 T Turbo 16V | | E | 1948 | B4204T3 | M | | | 07/00 ▸ 06/01 | 8602116 | **732372** | 623 331 | ALB |
| 2.0 i Turbo 16V | VS | E | 1948 | B4204T,B4204T3,B4204T5 | A | +/- | | 11/97 ▸ 03/04 | 8602117 | **732372** | 623 331 | ALB |
| 2.0 i 16V | VS1616 ; VS | E | 1948 | B4204S,B4204S2 | A | | | 10/95 ▸ 03/04 | 8601843 | **734320** | 670 377,5 | ALB |
| 2.0 i 16V | VS1616 ; VS | E | 1948 | B4204S,B4204S2 | A | | | 10/95 ▸ 12/99 | 86020658 | **732524** | 654 400 | ALB |
| 2.0 T Turbo 16V | | E | 1948 | B4204T3 | A | | | 07/00 ▸ 06/01 | 8602117 | **732372** | 623 331 | ALB |
| 1.9 TD | VS7113 | D | 1870 | D4192T | M | + | | 07/96 ▸ 08/99 | 86021078 | **732525** | 400 674 | ALB |
| 1.9 TD | VS7113 | D | 1870 | D4192T | M | - | | 07/96 ▸ 08/99 | 86021060 | **732525** | 400 674 | ALB |

## S40 (2004>)

| | | | | | | | | | | | | |
|---|---|---|---|---|---|---|---|---|---|---|---|---|
| 1.8 i 16V | | F | 1798 | B4184S8 | M | | | 06/05 ▸ | 8603621 | **734320** | 670 377,5 | ALB |
| 1.6 i 16V | MS2042 | E | 1596 | B4164S3 | M | | | 01/05 ▸ | 8603621 | **734320** | 670 377,5 | ALB |
| 1.8 i 16V | | E | 1798 | B4184S11 | M | +/- | | 03/04 ▸ | 8601843 | **734320** | 670 377,5 | ALB |
| 1.8 i 16V | | E | 1798 | B4184S11 | M | | | 03/04 ▸ | 8603621 | **734320** | 670 377,5 | ALB |
| 2.0 i 16V | | E | 1999 | B4204S3 | M | | | 02/06 ▸ | 8603621 | **734320** | 670 377,5 | ALB |
| 2.5 i 20V | | E | 2521 | B5254T3 | M | | | 03/04 ▸ | 36002407 | •**735490** | 620 421 | ALB |
| 1.6 D 16V | | D | 1560 | D4164T | M | | | 01/05 ▸ | 8603811 | **734321** | 670 377,5 | ALB |
| 2.0 D 16V | | D | 1997 | D4204T2 | M | | | 03/04 ▸ 12/06 | 8603811 | **734321** | 670 377,5 | ALB |
| 2.0 D 16V | | D | 1998 | D4204T | M | +/- | | 03/04 ▸ | 8603244 | **734321** | 670 377,5 | ALB |
| 2.0 D 16V | | D | 1998 | D4204T | M | | | 03/04 ▸ | 8603811 | **734321** | 670 377,5 | ALB |
| 2.0 D 16V | | D | 1998 | D4204T | M | | | 11/05 ▸ | 8603244 | **734321** | 670 377,5 | ALB |

## V40

| | | | | | | | | | | | | |
|---|---|---|---|---|---|---|---|---|---|---|---|---|
| 1.8 i Bi-Fuel 16V | | F | 1783 | B4184S10 | M | +/- | | 01/01 ▸ 03/04 | 86020658 | **732524** | 654 400 | ALB |
| 1.6 i 16V | VW1113 ; VW ; VW1103 | E | 1587 | B4164S,B4164S-D3,B4164S2 | M | +/- | | 05/97 ▸ 08/99 | 86020658 | **732524** | 654 400 | ALB |
| 1.6 i 16V | VW | E | 1587 | B4164S2 | M | | | 2000 ▸ 03/04 | 8601843 | **734320** | 670 377,5 | ALB |
| 1.8 i 16V | VW | E | 1731 | B4184S-D3 | M | +/- | | 02/96 ▸ 08/99 | 86020658 | **732524** | 654 400 | ALB |
| 1.8 i 16V | VW1213 | E | 1731 | B4184S | M | | | 10/95 ▸ 08/99 | 86020658 | **732524** | 654 400 | ALB |
| 1.8 i 16V | VW1216 ; VW | E | 1731 | B4184S,B4184S-D3 | A | | | 10/95 ▸ 08/99 | 86020658 | **732524** | 654 400 | ALB |
| 1.8 i 16V | VW | E | 1783 | B4184S2,B4184S3 | M | +/- | | 04/99 ▸ 1999 | 86020658 | **732524** | 654 400 | ALB |
| 1.8 i 16V | VW | E | 1783 | B4184S2,B4184S3 | M | | | 2000 ▸ 03/04 | 8601843 | **734320** | 670 377,5 | ALB |
| 1.8 i 16V | VW | E | 1783 | B4184S2 | A | | | 04/99 ▸ 1999 | 86020658 | **732524** | 654 400 | ALB |
| 1.8 i 16V | VW | E | 1783 | B4184S2 | A | | | 2000 ▸ 03/04 | 8601843 | **734320** | 670 377,5 | ALB |
| 1.8 i 16V | | E | 1834 | B4184SJ,B4184SM | M | +/- | | 03/98 ▸ 03/04 | 86020658 | **732524** | 654 400 | ALB |
| 1.8 i 16V | VW | E | 1834 | B4184SM | M | | | 2000 ▸ 03/04 | 8601843 | **734320** | 670 377,5 | ALB |
| 1.8 i 16V | VW | E | 1834 | B4184SM | A | | | 03/98 ▸ 1999 | 86020658 | **732524** | 654 400 | ALB |
| 1.8 i 16V | VW | E | 1834 | B4184SM | A | | | 2000 ▸ 03/04 | 8601843 | **734320** | 670 377,5 | ALB |
| 1.9 T 16V | | E | 1855 | B4194T,B4194T2 | M | +/- | | 05/97 ▸ 03/04 | 8602116 | **732372** | 623 331 | ALB |
| 1.9 T 16V | VW | E | 1855 | B4194T,B4194T2 | A | +/- | | 05/97 ▸ 03/04 | 8602117 | **732372** | 623 331 | ALB |
| 1.9 T 16V | | E | 1855 | B4194T | A | | | 07/00 ▸ 03/04 | 8602116 | **732372** | 623 331 | ALB |
| 2.0 T Turbo 16V<br>2.0 i Turbo 16V | VW | E | 1948 | B4204T,B4204T3 | M | +/- | | 11/97 ▸ 03/04 | 8602116 | **732372** | 623 331 | ALB |
| 2.0 i 16V | VW1613 ; VW | E | 1948 | B4204S,B4204S2 | M | | | 10/95 ▸ 1999 | 86020658 | **732524** | 654 400 | ALB |
| 2.0 i 16V | VW ; VW1613 | E | 1948 | B4204S,B4204S2 | M | | | 2000 ▸ 03/04 | 8601843 | **734320** | 670 377,5 | ALB |
| 2.0 T Turbo 16V,2.0 i Turbo 16V | | E | 1948 | B4204T,B4204T3 | A | +/- | | 11/97 ▸ 03/04 | 8602117 | **732372** | 623 331 | ALB |
| 2.0 i 16V | VW1616 ; VW | E | 1948 | B4204S,B4204S2 | A | | | 10/95 ▸ 1999 | 86020658 | **732524** | 654 400 | ALB |
| 2.0 i 16V | VW ; VW1616 | E | 1948 | B4204S,B4204S2 | A | | | 2000 ▸ 03/04 | 8601843 | **734320** | 670 377,5 | ALB |
| 1.9 TD,1.9 TDi | VW7113 ; VW | D | 1870 | D4192T,D4192T2 | M | + | | 06/96 ▸ 03/04 | 86021078 | **732525** | 400 674 | ALB |
| 1.9 TD,1.9 TDi | VW ; VW7113 | D | 1870 | D4192T,D4192T2 | M | - | | 06/96 ▸ 03/04 | 86021060 | **732525** | 400 674 | ALB |

## V50

| | | | | | | | | | | | | |
|---|---|---|---|---|---|---|---|---|---|---|---|---|
| 1.8 i Flexifuel 16V | MW0842 | F | 1798 | B4184S8 | M | +/- | | 05/06 ▸ | 8603621 | **734320** | 670 377,5 | ALB |
| 1.6 i 16V | MW2042 | E | 1596 | B4164S3 | M | +/- | | 01/05 ▸ 04/07 | 8603621 | **734320** | 670 377,5 | ALB |
| 1.8 i 16V | MW2142 | E | 1798 | B4184S11 | M | +/- | | 05/04 ▸ | 8603621 | **734320** | 670 377,5 | ALB |
| 2.0 i 16V | MW4342 | E | 1999 | B4204S3 | M | +/- | | 02/06 ▸ | 8603620 | **734321** | 670 377,5 | ALB |
| 2.0 i 16V | MW4342 | E | 1999 | B4204S3 | M | | | 02/06 ▸ | 8603621 | **734320** | 670 377,5 | ALB |
| 1.6 D 16V | MW7652 | D | 1560 | D4164T | M | +/- | | 01/05 ▸ | 8603621 | **734320** | 670 377,5 | ALB |
| 1.6 D 16V | MW7652 | D | 1560 | D4164T | M | | | 01/05 ▸ | 8603811 | **734321** | 670 377,5 | ALB |
| 2.0 D 16V | | D | 1997 | D4204T2 | M | | | 03/04 ▸ 12/06 | 8603811 | **734321** | 670 377,5 | ALB |
| 2.0 D 16V | MW7552 ; MW7551 | D | 1998 | D4204T | M | +/- | | 03/04 ▸ | 8603620 | **734321** | 670 377,5 | ALB |

# VOLVO (.../...)

## V50 (.../...)

| | | | CC | | | AC | | | OE | Valeo | DIM. | TECH |
|---|---|---|---|---|---|---|---|---|---|---|---|---|
| 2.0 D 16V | MW7551 ; MW7552 | D | 1998 | D4204T | M | | | 03/04 ▸ | 8603811 | **734321** | 670 377,5 | ALB |

## S60 (2000>2009)

| | | | | | | | | | | | | |
|---|---|---|---|---|---|---|---|---|---|---|---|---|
| 2.4 i CNG 20V<br>2.4 i GPL 20V | HU33P9 ; HV3249 | G | 2435 | B5244SG,B5244SG2 | A | + | | 01/04 ▸ 03/09 | 8602753 | **735237** | 622 419 | ALB |
| 2.4 i CNG 20V<br>2.4 i GPL 20V | HV3249 ; HU33P9 | G | 2435 | B5244SG,B5244SG2 | A | | TSW | 06/01 ▸ 03/09 | 8602539 | **731299** | 500 286 | ALB |
| 2.0 i Turbo 20V | RS49K9 | E | 1984 | B5204T5 | A | +/- | TSW | 08/00 ▸ 03/09 | 8602539 | **731299** | 500 286 | ALB |
| 2.0 i Turbo 20V | RS49K9 | E | 1984 | B5204T5 | A | +/- | TSW | 01/05 ▸ 03/09 | 8602755 | **731299** | 500 286 | ALB |
| 2.3 i Turbo 20V | RS53K2 | E | 2318 | B5234T3 | M | +/- | | 08/00 ▸ 12/03 | 8602558 | **734856** | 590 386 | ALB |
| 2.3 i Turbo 20V | RS53K9 | E | 2318 | B5234T3 | A | + | TSW | 08/00 ▸ 12/04 | 8602539 | **731299** | 500 286 | ALB |
| 2.3 i Turbo 20V | RS53K9 | E | 2318 | B5234T3 | A | + | TSW | 01/04 ▸ 12/04 | 8602755 | **731299** | 500 286 | ALB |
| 2.3 i Turbo 20V | RS57P9 | E | 2319 | B5234T7-E2 | A | + | | 01/04 ▸ 12/04 | 8602753 | **735237** | 622 419 | ALB |
| 2.3 i Turbo 20V | RS57P9 | E | 2319 | B5234T7-E2 | A | | TSW | 08/00 ▸ 12/04 | 8602539 | **731299** | 500 286 | ALB |
| 2.4 i 20V | RS5441 | E | 2401 | B5244T5 | M | | | 02/04 ▸ 03/09 | 36002407 | •**735490** | 620 421 | ALB |
| 2.4 i 20V | RS5449 | E | 2401 | B5244T5 | A | | | 02/04 ▸ 03/09 | 36002407 | •**735490** | 620 421 | ALB |
| 2.4 i Turbo 20V | RS58K9 ; RS58K7 | E | 2435 | B5244T3 | A | + | TSW | 08/00 ▸ 01/03 | 8602539 | **731299** | 500 286 | ALB |
| 2.4 i Turbo 20V | RS58K9 ; RS58K7 | E | 2435 | B5244T3 | A | + | TSW | 01/04 ▸ | 8602755 | **731299** | 500 286 | ALB |
| 2.4 i 20V | RS61P9 ; RS65P9 | E | 2435 | B5244S,B5244S2 | A | + | | 01/04 ▸ | 8602753 | **735237** | 622 419 | ALB |
| 2.4 i 20V | RS65S9 ; RS6149<br>RS61S9 ; RS65P9 ; RS6549 ; RS61P9 | E | 2435 | B5244S,B5244S2 | A | | TSW | 08/00 ▸ 03/09 | 8602539 | **731299** | 500 286 | ALB |
| 2.5 i Turbo 20V | RS5953 ; RS5952<br>RS59G3 ; RS5444 ; RS5446 | E | 2521 | B5254T2,B5254T4 | M | | | 03/03 ▸ 03/09 | 36002407 | •**735490** | 620 421 | ALB |
| 2.5 i Turbo 20V | RS5247 | E | 2521 | B5254T4 | A | +/- | TSW | 03/03 ▸ 12/03 | 8602539 | **731299** | 500 286 | ALB |
| 2.5 i Turbo 20V | RS5247 | E | 2521 | B5254T4 | A | +/- | TSW | 01/04 ▸ 04/07 | 8602755 | **731299** | 500 286 | ALB |
| 2.5 i Turbo 20V | RS5247 ; RS5959<br>RS5957 ; RS5249 | E | 2521 | B5254T2,B5254T4 | A | | | 03/03 ▸ 03/09 | 36002407 | •**735490** | 620 421 | ALB |
| 2.4 TDi 20V | RS7939 ; RS7439 | D | 2401 | D5244T,D5244T2 | A | + | TSW | 06/01 ▸ 03/05 | 8602539 | **731299** | 500 286 | ALB |
| 2.4 TDi 20V | RS7939 ; RS7439 | D | 2401 | D5244T,D5244T2 | A | + | TSW | 01/04 ▸ 03/05 | 8602755 | **731299** | 500 286 | ALB |
| 2.4 TDi 20V | RS7141 ; RS7469<br>RS7999 ; RS8149 | D | 2401 | D5244T2,D5244T4,D5244T5<br>D5244T7 | A | | TSW | 11/04 ▸ 03/09 | 8602539 | **731299** | 500 286 | ALB |

## C70

| | | | | | | | | | | | | |
|---|---|---|---|---|---|---|---|---|---|---|---|---|
| 2.0 i Turbo 20V | | E | 1984 | B5204T2,B5204T3 | M | | | 03/97 ▸ 12/98 | 8602566 | **732365** | 588 383 | CBS |
| 2.0 i Turbo,2.0 i Turbo 20V | | E | 1984 | B5204T3,B5204T4-E2 | M | | | 01/99 ▸ 12/05 | 8601449 | **734855** | 590 388 | ALB |
| 2.0 i Turbo 20V | | E | 1984 | B5204T2,B5204T3 | A | | | 03/97 ▸ 12/98 | 8602562 | | 588 383 | CBS |
| 2.0 i Turbo,2.0 i Turbo 20V | | E | 1984 | B5204T3,B5204T4-E2 | A | | | 01/99 ▸ 12/05 | 8601451 | **734856** | 590 386 | ALB |
| 2.3 i Turbo 20V | | E | 2316 | B5234T3-240 | M | | | 03/97 ▸ 12/98 | 8602566 | **732365** | 588 383 | CBS |
| 2.3 i Turbo 20V | LC5302 | E | 2316 | B5234T3-240 | M | | | 03/97 ▸ | 86013554 | **732365** | 588 383 | CBS |
| 2.3 i Turbo 20V | | E | 2316 | B5234T3-240 | M | | | 01/99 ▸ 06/02 | 8601449 | **734855** | 590 388 | ALB |
| 2.3 i Turbo 20V | | E | 2316 | B5234T3-240 | A | | | 03/97 ▸ 12/98 | 8602562 | | 588 383 | CBS |
| 2.3 i Turbo 20V | | E | 2316 | B5234T3-240 | A | | | 01/99 ▸ 06/02 | 8601451 | **734856** | 590 386 | ALB |
| 2.3 i Turbo,2.3 i Turbo 20V | | E | 2319 | B5234T3-E2,B5234T9 | M | | | 07/02 ▸ 12/05 | 8601449 | **734855** | 590 388 | ALB |
| 2.3 i Turbo,2.3 i Turbo 20V | | E | 2319 | B5234T3-E2,B5234T9 | A | | | 07/02 ▸ 12/05 | 8601451 | **734856** | 590 386 | ALB |
| 2.4 i Turbo 20V,2.5 i 20V | LC5662 | E | 2435 | B5254S,B5254T | M | | | 03/97 ▸ 12/98 | 8602566 | **732365** | 588 383 | CBS |
| 2.4 i Turbo 20V | LC5662 | E | 2435 | B5254T | M | | | 03/97 ▸ | 86013554 | **732365** | 588 383 | CBS |
| 2.4 i 20V,2.4 i Turbo,2.4 i Turbo 20V<br>2.5 i 20V,2.5 i Turbo | | E | 2435 | B5244S,B5244T,B5244T-200<br>B5244T7,B5254S,B5254T | M | | | 01/99 ▸ 12/05 | 8601449 | **734855** | 590 388 | ALB |
| 2.4 i Turbo 20V,2.5 i 20V | | E | 2435 | B5254S,B5254T | A | | | 03/97 ▸ 12/98 | 8602562 | | 588 383 | CBS |
| 2.4 i 20V,2.4 i Turbo,2.4 i Turbo 20V<br>2.5 i 20V,2.5 i Turbo | | E | 2435 | B5244S,B5244T,B5244T-200<br>B5244T7,B5254S,B5254T | A | | | 01/99 ▸ 12/05 | 8601451 | **734856** | 590 386 | ALB |

## C70 CC (2006>)

| | | | | | | | | | | | | |
|---|---|---|---|---|---|---|---|---|---|---|---|---|
| 2.0 D 16V | | D | 1998 | D4204T | M | | | 01/07 ▸ | 8603811 | **734321** | 670 377,5 | ALB |

## S70

| | | | | | | | | | | | | |
|---|---|---|---|---|---|---|---|---|---|---|---|---|
| 2.5 i GPL 10V | LS3402 | G | 2435 | GB5252S2 | M | | | 06/98 ▸ 12/98 | 86013539 | •**731477** | 588 383 | CBS |
| 2.5 i GPL 10V | LS3106 | G | 2435 | GB5252S | A | | | 05/97 ▸ 12/98 | 86013539 | •**731477** | 588 383 | CBS |
| 2.5 i GPL 10V | LS3406 | G | 2435 | GB5252S2 | A | | | 06/98 ▸ 12/98 | 86013547 | | 590 383 | CBS |
| 2.0 i 10V | LS4102 | E | 1984 | B5202FS | M | | | 12/96 ▸ 1998 | 86013539 | •**731477** | 588 383 | CBS |
| 2.0 i 20V,2.0 i Turbo 20V | LS4703 ; LS4602<br>LS4702 ; LS4302 | E | 1984 | B5204T2,B5204T3,B5204T4 | M | | | 12/96 ▸ 12/98 | 8602566 | **732365** | 588 383 | CBS |
| 2.0 i Turbo 20V | LS4703 ; LS4702<br>LS4302 | E | 1984 | B5204T3,B5204T4 | M | | | 01/99 ▸ 11/00 | 8601449 | **734855** | 590 388 | ALB |
| 2.0 i 10V | LS4106 | E | 1984 | B5202FS | A | | | 12/96 ▸ 04/99 | 86013547 | | 590 383 | CBS |
| 2.0 i 20V,2.0 i Turbo 20V | LS4706 ; LS4306<br>LS4606 | E | 1984 | B5204T2,B5204T3,B5204T4 | A | | | 12/96 ▸ 12/98 | 8602562 | | 588 383 | CBS |
| 2.0 i Turbo 20V | LS4706 ; LS4306 | E | 1984 | B5204T3,B5204T4 | A | | | 01/99 ▸ 11/00 | 8601451 | **734856** | 590 386 | ALB |
| 2.3 i Turbo 20V | LS5002 ; LS5302 | E | 2318 | B5234T3,B5234T4 | M | | | 12/96 ▸ 1998 | 8602566 | **732365** | 588 383 | CBS |
| 2.3 i Turbo 20V | LS5302 ; LS5002 | E | 2318 | B5234T3,B5234T4 | M | | | 12/96 ▸ | 86013554 | **732365** | 588 383 | CBS |

Radiator Radiateur Motorkühler Radiatore di raffreddamento Radyatör Radiator Radiador Радиатор vízhűtő Vodní chladič Radiator Ψυγείο



• **New** Nouveau **Nuevo** Novo **Nuovo** Nieuw **Neu** Nowość **Yeni** Новый Νέο **Novy**

# VOLVO (.../...)

## S70 (.../...)

| | | | CC | | | AC | | | OE | Valeo | DIM. | TECH |
|---|---|---|---|---|---|---|---|---|---|---|---|---|
| 2.3 i 20V | LS5402 | E | 2318 | B5234FS | M | | | 12/96 ▸ 06/98 | 86013539 | •731477 | 588 383 | CBS |
| 2.3 i Turbo 20V | LS5302 | E | 2318 | B5234T3 | M | | | 1999 ▸ 11/00 | 8601449 | 734855 | 590 388 | ALB |
| 2.3 i Turbo 20V | LS5306 ; LS5366 | E | 2318 | B5234T3 | A | | | 12/96 ▸ | 86013562 | | 588 383 | CBS |
| 2.3 i 20V | LS5406 | E | 2318 | B5234FS | A | | | 12/96 ▸ 12/98 | 86013547 | | 590 383 | CBS |
| 2.3 i Turbo 20V | LS5906 ; LS5306<br>LS5366 | E | 2318 | B5234T2,B5234T3 | A | | | 12/96 ▸ 06/98 | 8602562 | | 588 383 | CBS |
| 2.3 i Turbo 20V | LS5306 ; LS5366 | E | 2318 | B5234T3 | A | | | 1999 ▸ 11/00 | 8601451 | 734856 | 590 386 | ALB |
| 2.3 i Turbo 20V | LS5706 | E | 2319 | B5234T7 | A | | | 05/97 ▸ 12/98 | 8602562 | | 588 383 | CBS |
| 2.3 i Turbo 20V | LS5706 | E | 2319 | B5234T7 | A | | | 01/99 ▸ 11/00 | 8601451 | 734856 | 590 386 | ALB |
| 2.5 i Turbo 20V | LS5663 ; LS5662 | E | 2435 | B5254T | M | | | 12/96 ▸ 12/98 | 8602566 | 732365 | 588 383 | CBS |
| 2.5 i Turbo 20V | LS5662 | E | 2435 | B5254T | M | | | 12/96 ▸ 04/99 | 86013554 | 732365 | 588 383 | CBS |
| 2.5 i 10V,2.5 i 20V | LS5122 ; LS5522<br>LS5502 | E | 2435 | B5252FS,B5254FS,B5254S | M | | | 12/96 ▸ 12/98 | 86013539 | •731477 | 588 383 | CBS |
| 2.4 i Turbo 20V<br>2.5 i Turbo 20V | LS5663 ; LS5603<br>LS5602 ; LS5662 | E | 2435 | B5244T,B5254T | M | | | 01/99 ▸ 11/00 | 8601449 | 734855 | 590 388 | ALB |
| 2.5 i 10V,2.5 i 20V | LS5526 ; LS5126<br>LS5506 | E | 2435 | B5252FS,B5254FS,B5254S | A | | | 12/96 ▸ 04/99 | 86013547 | | 590 383 | CBS |
| 2.5 i Turbo 20V | LS5666 | E | 2435 | B5254T | A | | | 12/96 ▸ 04/99 | 86013562 | | 588 383 | CBS |
| 2.5 i Turbo 20V | LS5666 | E | 2435 | B5254T | A | | | 12/96 ▸ 1998 | 8602562 | | 588 383 | CBS |
| 2.4 i Turbo 20V | LS5608 | E | 2435 | B5244T | A | | | 05/99 ▸ 11/00 | 8601449 | 734855 | 590 388 | ALB |
| 2.4 i Turbo 20V<br>2.5 i Turbo 20V | LS5606 ; LS5666 | E | 2435 | B5244T,B5254T | A | | | 05/99 ▸ 11/00 | 8601451 | 734856 | 590 386 | ALB |
| 2.4 TDi 10V | LS7202 | D | 2461 | D5252T | M | | | 12/96 ▸ 11/00 | 8601449 | 734855 | 590 388 | ALB |
| 2.4 TDi 10V | LS7202 | D | 2461 | D5252T | M | | | 12/96 ▸ 1998 | 86013570 | •731477 | 588 383 | CBS |
| 2.4 TDi 10V | LS7206 | D | 2461 | D5252T | A | | | 12/96 ▸ 1998 | 86013588 | | 590 383 | CBS |
| 2.4 TDi 10V | LS7206 | D | 2461 | D5252T | A | | | 12/96 ▸ 11/00 | 8601451 | 734856 | 590 386 | ALB |

## V70 (96>99)

| | | | | | | | | | | | | |
|---|---|---|---|---|---|---|---|---|---|---|---|---|
| 2.4 i GPL 20V | LW3309 | G | 2435 | B5244SG2 | A | + | | 05/99 ▸ 12/99 | 8602559 | 734856 | 590 386 | ALB |
| 2.0 i Turbo 20V | LW4302 ; LW4602<br>LW4702 ; LW4703 | E | 1984 | B5204T2,B5204T3,B5204T4 | M | + | | 05/97 ▸ 06/98 | 8602566 | 732365 | 588 383 | CBS |
| 2.0 i 10V | LW4102 | E | 1984 | B5202FS | M | + | | 05/97 ▸ 1998 | 86013539 | •731477 | 588 383 | CBS |
| 2.0 i Turbo 20V | LW4706 ; LW4306<br>LW4606 | E | 1984 | B5204T2,B5204T3,B5204T4 | A | + | | 05/97 ▸ 06/98 | 8602562 | | 588 383 | CBS |
| 2.0 i 10V | LW4106 | E | 1984 | B5202FS | A | | | 05/97 ▸ 06/98 | 86013547 | | 590 383 | CBS |
| 2.3 i Turbo 20V | LW5302 ; LW5062<br>LW5003 | E | 2318 | B5234T3,B5234T4 | M | + | | 05/97 ▸ 06/98 | 8602566 | 732365 | 588 383 | CBS |
| 2.3 i 20V | LW5402 | E | 2318 | B5234FS | M | + | | 05/97 ▸ 06/98 | 86013539 | •731477 | 588 383 | CBS |
| 2.3 i Turbo 20V | LW5003 ; LW5062<br>LW5302 | E | 2318 | B5234T3,B5234T4 | M | | | 05/97 ▸ 06/98 | 86013554 | 732365 | 588 383 | CBS |
| 2.3 i Turbo 20V | LW5306 ; LW5906 | E | 2318 | B5234T2,B5234T3 | A | + | | 05/97 ▸ 06/98 | 8602562 | | 588 383 | CBS |
| 2.3 i Turbo 20V | LW5306 ; LW5366<br>LW5266 | E | 2318 | B5234T3,B5234T6 | A | | | 05/97 ▸ 1998 | 8602562 | | 588 383 | CBS |
| 2.3 i Turbo 20V | LW5306 ; LW5266<br>LW5366 | E | 2318 | B5234T3,B5234T6 | A | | | 05/97 ▸ 06/98 | 86013562 | | 588 383 | CBS |
| 2.3 i Turbo 20V | LW5706 | E | 2319 | B5234T7 | A | + | | 05/97 ▸ 06/98 | 8602562 | | 588 383 | CBS |
| 2.4 i Turbo 20V<br>2.5 i Turbo 20V | LW5602 ; LW5662<br>LW5603 ; LW5663 | E | 2435 | B5244T,B5254T | M | + | | 12/96 ▸ 12/99 | 8601449 | 734855 | 590 388 | ALB |
| 2.5 i 10V,2.5 i 20V | LW5122 ; LW5522 | E | 2435 | B5252FS,B5254FS | M | + | | 12/96 ▸ 1998 | 86013539 | •731477 | 588 383 | CBS |
| 2.5 i Turbo 20V | LW5663 ; LW5662 | E | 2435 | B5254T | M | + | | 12/96 ▸ 1998 | 8602566 | 732365 | 588 383 | CBS |
| 2.5 i Turbo 20V | LW5662 ; LW5663 | E | 2435 | B5254T | M | | | 12/96 ▸ 12/99 | 86013554 | 732365 | 588 383 | CBS |
| 2.5 i Turbo 20V | LW5668 | E | 2435 | B5254T | A | + | | 12/96 ▸ 12/98 | 8602562 | | 588 383 | CBS |
| 2.4 i Turbo 20V<br>2.5 i Turbo 20V | LW5666 ; LW5606<br>LW5608 ; LW5668 | E | 2435 | B5244T,B5254T | A | + | | 01/99 ▸ 03/00 | 8602558 | 734856 | 590 386 | ALB |
| 2.4 i 20V,2.5 i 10V<br>2.5 i 20V | LW5126 ; LW6509<br>LW5526 ; LW6109<br>LW6107 | E | 2435 | B5244S,B5244S2,B5252FS<br>B5254FS | A | + | | 01/99 ▸ 12/99 | 8602559 | 734856 | 590 386 | ALB |
| 2.5 i Turbo 20V | LW5666 | E | 2435 | B5254T | A | | | 12/96 ▸ 12/99 | 8601451 | 734856 | 590 386 | ALB |
| 2.5 i 10V,2.5 i 20V | LW5126 ; LW5526 | E | 2435 | B5252FS,B5254FS | A | | | 12/96 ▸ 12/99 | 86013547 | | 590 383 | CBS |
| 2.5 i Turbo 20V | LW5666 | E | 2435 | B5254T | A | | | 12/96 ▸ 1998 | 8602562 | | 588 383 | CBS |
| 2.5 i Turbo 20V | LW5666 | E | 2435 | B5254T | A | | | 12/96 ▸ 12/99 | 86013562 | | 588 383 | CBS |
| 2.4 TDi 10V | LW7202 | D | 2461 | D5252T | M | | | 05/97 ▸ 06/98 | 86013570 | •731477 | 588 383 | CBS |
| 2.4 TDi 10V | LW7206 | D | 2461 | D5252T | A | | | 05/97 ▸ 06/98 | 86013588 | | 590 383 | CBS |

## V70 (2000>2007)

| | | | | | | | | | | | | |
|---|---|---|---|---|---|---|---|---|---|---|---|---|
| 2.0 i Turbo 20V | | E | 1984 | B5204T5 | A | +/- | TSW | 01/00 ▸ 12/03 | 8602539 | 731299 | 500 286 | ALB |
| 2.0 i Turbo 20V | | E | 1984 | B5204T5 | A | +/- | TSW | 01/04 ▸ 04/07 | 8602755 | 731299 | 500 286 | ALB |
| 2.0 i Turbo 20V<br>▸ 314925 | | E | 1984 | B5204T5 | M | +/- | | 01/00 ▸ | 8602411 | | | |
| 2.3 i 20V | | E | 2319 | B5234T3-E2 | M | +/- | | 01/00 ▸ 03/05 | 8602538 | | 622 426 | ALB |

# VOLVO (.../...)

## V70 (2000>2007) (.../...)

| Type Ctr. | | CC | | | AC | | | OE | Valeo | DIM. | TECH |
|---|---|---|---|---|---|---|---|---|---|---|---|
| 2.3 i 20V | E | 2319 | B5234T3-E2,B5234T7 | A | +/- | TSW | 01/00 ▸ 12/03 | 8602539 | **731299** | 500 286 | ALB |
| 2.3 i 20V | E | 2319 | B5234T3-E2,B5234T7 | A | +/- | TSW | 01/04 ▸ 03/05 | 8602755 | **731299** | 500 286 | ALB |
| 2.4 i 20V | E | 2401 | B5244T5 | M | +/- | | 04/04 ▸ 04/07 | 8602754 | | 622 426 | ALB |
| 2.4 i 20V | E | 2401 | B5244T5 | A | +/- | TSW | 04/04 ▸ 04/07 | 8602755 | **731299** | 500 286 | ALB |
| 2.4 i 20V | E | 2435 | B5244S2,B5244T3 | M | +/- | | 01/00 ▸ 12/03 | 8602538 | | 622 426 | ALB |
| 2.4 i 20V | E | 2435 | B5244S | M | +/- | | 01/01 ▸ 12/03 | 8602412 | | | |
| 2.4 i 20V | E | 2435 | B5244S | M | +/- | | 01/04 ▸ 04/07 | 8602753 | **735237** | 622 419 | ALB |
| 2.4 i 20V | E | 2435 | B5244S2,B5244T3 | M | +/- | | 01/04 ▸ 04/07 | 8602754 | | 622 426 | ALB |
| 2.4 i 20V | E | 2435 | B5244T3 | A | +/- | TSW | 01/00 ▸ 12/03 | 8602539 | **731299** | 500 286 | ALB |
| 2.4 i 20V | E | 2435 | B5244S,B5244S2 | A | +/- | | 01/01 ▸ 12/03 | 8602412 | | | |
| 2.4 i 20V | E | 2435 | B5244T3,B5244T4 | A | +/- | TSW | 01/04 ▸ 10/05 | 8602755 | **731299** | 500 286 | ALB |
| 2.4 i 20V | E | 2435 | B5244S,B5244S2 | A | +/- | | 01/04 ▸ 04/07 | 8602753 | **735237** | 622 419 | ALB |
| 2.5 T 20V SW5244 | E | 2521 | B5254T2,B5254T4 | M | +/- | | 01/02 ▸ 12/03 | 8602538 | | 622 426 | ALB |
| 2.5 T 20V SW5244 | E | 2521 | B5254T2,B5254T4 | M | +/- | | 01/04 ▸ 04/07 | 8602754 | | 622 426 | ALB |
| 2.5 T 20V | E | 2521 | B5254T2,B5254T4 | A | +/- | TSW | 01/02 ▸ 12/03 | 8602539 | **731299** | 500 286 | ALB |
| 2.5 T 20V | E | 2521 | B5254T2,B5254T4 | A | +/- | TSW | 01/04 ▸ 04/07 | 8602755 | **731299** | 500 286 | ALB |
| 2.4 TDi 20V | D | 2401 | D5244T,D5244T2,D5244T5 | M | +/- | | 01/00 ▸ 12/03 | 8602538 | | 622 426 | ALB |
| 2.4 TDi 20V | D | 2401 | D5244T,D5244T2,D5244T3 D5244T4,D5244T5,D5244T7 | M | +/- | | 01/04 ▸ 04/07 | 8602754 | | 622 426 | ALB |
| 2.4 TDi 20V | D | 2401 | D5244T,D5244T2 | A | +/- | TSW | 01/00 ▸ 12/03 | 8602539 | **731299** | 500 286 | ALB |
| 2.4 TDi 20V | D | 2401 | D5244T,D5244T2 | A | +/- | TSW | 01/04 ▸ 04/07 | 8602755 | **731299** | 500 286 | ALB |
| 2.5 TDi 10V | D | 2461 | D5252T | M | +/- | | 01/00 ▸ 12/01 | 8602538 | | 622 426 | ALB |

## S80 (98>2006)

| | | | | | | | | | | | |
|---|---|---|---|---|---|---|---|---|---|---|---|
| 2.4 i CNG 20V,2.4 i GPL 20V | G | 2435 | B5244SG,B5244SG2 | M | | | 09/01 ▸ 02/06 | 36002407 | •**735490** | 620 421 | ALB |
| 2.4 i CNG 20V,2.4 i GPL 20V | G | 2435 | B5244SG,B5244SG2 | A | + | | 01/04 ▸ 02/06 | 8602753 | **735237** | 622 419 | ALB |
| 2.4 i CNG 20V,2.4 i GPL 20V | G | 2435 | B5244SG,B5244SG2 | A | | | 09/01 ▸ 02/06 | 36002407 | •**735490** | 620 421 | ALB |
| 2.4 i CNG 20V,2.4 i GPL 20V ▸ 310243 | G | 2435 | B5244SG,B5244SG2 | M | + | | 09/01 ▸ | 8602411 | | | |
| 2.4 i CNG 20V,2.4 i GPL 20V ▸ 310243 | G | 2435 | B5244SG,B5244SG2 | A | | | 09/01 ▸ 2003 | 8602412 | | | |
| 2.0 i Turbo 20V TS48C6 ; TS49K2 | E | 1984 | B5204T4,B5204T5 | M | + | | 06/98 ▸ 12/03 | 8602538 | | 622 426 | ALB |
| 2.0 i 20V TS43C2 | E | 1984 | B5204T3 | M | + | | 06/98 ▸ 12/00 | 8602558 | **734856** | 590 386 | ALB |
| 2.0 i 20V,2.0 i Turbo 20V TS48C6 ; TS49K2 TS43C2 | E | 1984 | B5204T3,B5204T4,B5204T5 | M | + | | 01/04 ▸ | 8602754 | | 622 426 | ALB |
| 2.0 i Turbo 20V TS4942 ; TS49K2 | E | 1984 | B5204T5 | M | | | 12/99 ▸ 02/06 | 36002407 | •**735490** | 620 421 | ALB |
| 2.0 i Turbo 20V TS49K9 | E | 1984 | B5204T5 | A | + | | 01/04 ▸ 02/06 | 8602753 | **735237** | 622 419 | ALB |
| 2.0 i 20V,2.0 i Turbo 20V TS43C6 ; TS48C2 | E | 1984 | B5204T3,B5204T4 | A | | TSW | 06/98 ▸ 12/00 | 8602539 | **731299** | 500 286 | ALB |
| 2.0 i Turbo 20V TS4949 ; TS49K9 | E | 1984 | B5204T5 | A | | | 12/99 ▸ 02/06 | 36002407 | •**735490** | 620 421 | ALB |
| 2.0 i 20V,2.0 i Turbo 20V TS43C6 ; TS49K9 TS48C2 ▸ 198384, 310243 | E | 1984 | B5204T3,B5204T4,B5204T5 | A | + | | 06/98 ▸ 2003 | 8602412 | | | |
| 2.4 i 20V TS6142 ; TS6542 APP198460 ▸ | E | 2435 | B5244S,B5244S2 | M | + | | 06/98 ▸ 2000 | 8602411 | | | |
| 2.4 i Turbo 20V TS58K2 | E | 2435 | B5244T3 | M | + | | 08/00 ▸ 12/03 | 8602538 | | 622 426 | ALB |
| 2.4 i Turbo 20V TS58K2 | E | 2435 | B5244T3 | M | + | | 01/04 ▸ | 8602754 | | 622 426 | ALB |
| 2.4 i Turbo 20V TS58K2 | E | 2435 | B5244T3 | M | | | 08/00 ▸ 12/03 | 36002407 | •**735490** | 620 421 | ALB |
| 2.4 i 20V TS6149 ; TS6549 | E | 2435 | B5244S,B5244S2 | A | + | | 06/98 ▸ 02/06 | 8602412 | | | |
| 2.4 i Turbo 20V TS58K9 | E | 2435 | B5244T3 | A | + | TSW | 08/00 ▸ 12/03 | 8602539 | **731299** | 500 286 | ALB |
| 2.4 i Turbo 20V TS58K9 | E | 2435 | B5244T3 | A | + | TSW | 01/04 ▸ | 8602755 | **731299** | 500 286 | ALB |
| 2.4 i 20V TS6149 ; TS6549 | E | 2435 | B5244S,B5244S2 | A | + | | 01/04 ▸ 02/06 | 8602753 | **735237** | 622 419 | ALB |
| 2.4 i Turbo 20V TS58K9 | E | 2435 | B5244T3 | A | | | 08/00 ▸ 12/03 | 36002407 | •**735490** | 620 421 | ALB |
| 2.5 i Turbo 20V TS5952 | E | 2521 | B5254T2 | M | + | | 07/03 ▸ 12/03 | 8602538 | | 622 426 | ALB |
| 2.5 i Turbo 20V TS5952 | E | 2521 | B5254T2 | M | + | | 01/04 ▸ 02/06 | 8602754 | | 622 426 | ALB |
| 2.5 i Turbo 20V TS5952 | E | 2521 | B5254T2 | M | | | 07/03 ▸ 02/06 | 36002407 | •**735490** | 620 421 | ALB |
| 2.5 i Turbo 20V TS5957 | E | 2521 | B5254T2 | A | + | TSW | 07/03 ▸ 12/03 | 8602539 | **731299** | 500 286 | ALB |
| 2.5 i Turbo 20V TS5957 | E | 2521 | B5254T2 | A | | | 07/03 ▸ 02/06 | 36002407 | •**735490** | 620 421 | ALB |
| 2.5 i Turbo 20V TS5957 | E | 2521 | B5254T2 | A | | TSW | 01/04 ▸ 02/06 | 8602755 | **731299** | 500 286 | ALB |
| 2.8 i TS90C5 | E | 2783 | B6284T | A | + | | 01/04 ▸ | 8602753 | **735237** | 622 419 | ALB |
| 2.8 i TS90C5 | E | 2783 | B6284T | A | | | 06/98 ▸ 12/01 | 36002407 | •**735490** | 620 421 | ALB |
| 2.8 i TS90C5 ▸ 310243 | E | 2783 | B6284T | A | + | | 06/98 ▸ 2003 | 8602412 | | | |
| 2.9 i TS97C2 APP198460 ▸ | E | 2922 | B6304S3 | M | | AC+ | 06/98 ▸ 12/99 | 8602411 | | | |
| 2.9 i TS94K2 | E | 2922 | B6294S | M | | | 03/99 ▸ 05/01 | 36002407 | •**735490** | 620 421 | ALB |
| 2.9 i,3.0 i 24V TS9245 ; TS9145 | E | 2922 | B6294S2,B6294T | A | + | | 01/04 ▸ 02/06 | 8602753 | **735237** | 622 419 | ALB |
| 2.9 i,3.0 i 24V TS94K5 ; TS9145 TS9245 | E | 2922 | B6294S,B6294S2,B6294T | A | | | 03/99 ▸ 02/06 | 36002407 | •**735490** | 620 421 | ALB |

Radiator Radiateur Motorkühler Radiatore di raffreddamento Radiator Radyatör Radiador Радиатор vízhűtő Vodní chladič Radiator Ψυγείο



• **New** Nouveau **Nuevo** Novo **Nuovo** Nieuw **Neu** Nowość **Yeni** Новый Νέο **Novy**

| Type Ctr. | | CC | | AC | | | OE | Valeo | DIM. | TECH |
|---|---|---|---|---|---|---|---|---|---|---|

# VOLVO (.../...)

## S80 (98>2006) (.../...)

| | | | | | | | | | | | | |
|---|---|---|---|---|---|---|---|---|---|---|---|---|
| 2.9 i ▸ 310243 | TS9245 ; TS97C5 | E | 2922 | B6294S2,B6304S3 | A | + | | 06/98 ▸ 2003 | 8602412 | | | |
| 3.0 i 24V ▸ 310243 | TS9145 | E | 2922 | B6294T | A | | | 06/01 ▸ 2003 | 8602412 | | | |
| 2.4 TDi 20V | TS7932 ; TS7432 | D | 2401 | D5244T,D5244T2 | M | + | | 07/01 ▸ 12/03 | 8602538 | | 622 426 | ALB |
| 2.4 TDi 20V | TS7432 ; TS7932 | D | 2401 | D5244T,D5244T2 | M | + | | 01/04 ▸ 02/06 | 8602754 | | 622 426 | ALB |
| 2.4 TDi 20V | TS7432 | D | 2401 | D5244T2 | M | | | 10/01 ▸ 02/06 | 36002407 | •735490 | 620 421 | ALB |
| 2.4 TDi 20V | TS7939 ; TS7439 | D | 2401 | D5244T,D5244T2 | A | + | TSW | 07/01 ▸ 02/06 | 8602539 | 731299 | 500 286 | ALB |
| 2.4 TDi 20V | TS7439 ; TS7939 | D | 2401 | D5244T,D5244T2 | A | + | TSW | 01/04 ▸ 02/06 | 8602755 | 731299 | 500 286 | ALB |
| 2.4 TDi 20V | TS7439 | D | 2401 | D5244T2 | A | | | 10/01 ▸ 02/06 | 36002407 | •735490 | 620 421 | ALB |
| 2.4 TDi 10V | TS7202 | D | 2461 | D5252T | M | + | | 06/98 ▸ 12/01 | 8602538 | | 622 426 | ALB |
| 2.4 TDi 10V | TS7202 | D | 2461 | D5252T | M | + | | 01/04 ▸ | 8602754 | | 622 426 | ALB |
| 2.4 TDi 10V | TS7206 | D | 2461 | D5252T | A | + | TSW | 06/98 ▸ 12/01 | 8602539 | 731299 | 500 286 | ALB |
| 2.4 TDi 10V | TS7206 | D | 2461 | D5252T | A | + | TSW | 01/04 ▸ | 8602755 | 731299 | 500 286 | ALB |

## XC 70 (97>99)

| | | | | | | | | | | | |
|---|---|---|---|---|---|---|---|---|---|---|---|
| 2.0 i 20V | E | 1984 | B5204T3 | M | + | | 12/97 ▸ 12/98 | 8602566 | 732365 | 588 383 | CBS |
| 2.0 i 20V | E | 1984 | B5204T3 | M | + | | 01/99 ▸ 12/99 | 8601449 | 734855 | 590 388 | ALB |
| 2.4 i 20V,2.5 i 20V | E | 2435 | B5244T,B5254T | M | + | | 12/97 ▸ 12/98 | 8602566 | 732365 | 588 383 | CBS |
| 2.4 i 20V,2.5 i 20V | E | 2435 | B5244T,B5254T | M | + | | 01/99 ▸ 12/99 | 8601449 | 734855 | 590 388 | ALB |
| 2.4 i 20V,2.5 i 20V | E | 2435 | B5244T,B5254T | A | + | | 12/97 ▸ 12/98 | 8602562 | | 588 383 | CBS |
| 2.4 i 20V,2.5 i 20V | E | 2435 | B5244T,B5254T | A | + | | 01/99 ▸ 12/99 | 8602558 | 734856 | 590 386 | ALB |
| 2.4 i 20V,2.5 i 20V | E | 2435 | B5244T,B5254T | A | | | 12/97 ▸ 12/98 | 8602566 | 732365 | 588 383 | CBS |
| 2.4 i 20V,2.5 i 20V | E | 2435 | B5244T,B5254T | A | | | 01/99 ▸ 12/99 | 8601449 | 734855 | 590 388 | ALB |

## XC 70 (2000>2007)

| | | | | | | | | | | | |
|---|---|---|---|---|---|---|---|---|---|---|---|
| 2.3 i Turbo 20V | E | 2319 | B5234T7-E2 | A | | | 01/00 ▸ 12/04 | 36002407 | •735490 | 620 421 | ALB |
| 2.4 i Turbo 20V | E | 2435 | B5244T3 | M | | | 09/00 ▸ 09/02 | 36002407 | •735490 | 620 421 | ALB |
| 2.4 i Turbo 20V | E | 2435 | B5244T3,B5244T4 | A | | | 09/00 ▸ 03/07 | 36002407 | •735490 | 620 421 | ALB |
| 2.5 T 20V | E | 2521 | B5254T2 | M | | | 09/02 ▸ 03/07 | 36002407 | •735490 | 620 421 | ALB |
| 2.5 T 20V | E | 2521 | B5254T2 | A | | | 09/02 ▸ 03/07 | 36002407 | •735490 | 620 421 | ALB |
| 2.4 TDi 20V | D | 2401 | D5244T,D5244T4 | M | | | 08/02 ▸ 03/07 | 36002407 | •735490 | 620 421 | ALB |
| 2.4 TDi 20V | D | 2401 | D5244T,D5244T4 | A | | | 08/02 ▸ 03/07 | 36002407 | •735490 | 620 421 | ALB |

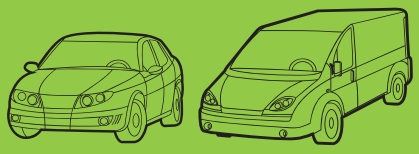

Valeo

Pour / For

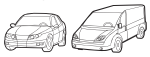


| | | | |
|---|---|---|---|
| ALFA ROMEO | 332 | MCC | 362 |
| AUDI | 333 | MERCEDES | 362 |
| BMW | 337 | MINI | 366 |
| CHRYSLER | 340 | MITSUBISHI | 366 |
| CITROEN | 341 | NISSAN | 368 |
| DACIA | 346 | OPEL | 369 |
| DAEWOO | 347 | PEUGEOT | 373 |
| DAF | 347 | PORSCHE | 379 |
| DAIHATSU | 347 | RENAULT | 380 |
| FIAT | 347 | RENAULT TRUCKS | 385 |
| FORD | 350 | ROVER | 386 |
| HONDA | 353 | SAAB | 386 |
| HYUNDAI | 354 | SCANIA | 387 |
| IVECO | 355 | SEAT | 387 |
| IVECO TRUCKS | 355 | SKODA | 389 |
| JAGUAR | 357 | SUBARU | 390 |
| JEEP | 357 | SUZUKI | 391 |
| KIA | 357 | TOYOTA | 391 |
| LANCIA | 358 | VAUXHALL | 395 |
| LAND ROVER | 358 | VOLKSWAGEN | 398 |
| LEXUS | 359 | VOLVO | 402 |
| MAN | 359 | VOLVO TRUCKS | 403 |
| MAZDA | 360 | | |

Condenser
Condenseur
Kondensator
Condensatore
Condensor
Kondenser
Condensador
КОНДЕНСЕР
klímahűtő
Kondenzátor
Condensor
Συμυκνωτής

# ALFA ROMEO

| | | CC | | | | OE | Valeo | DIM | TECH |
|---|---|---|---|---|---|---|---|---|---|
| **145** | | | | | | | | | |
| **1.3 i** | E | 1351 | AR33501 | N | 09/94 ▸ 12/96 | 60610662 | **816973** | 549 352 | AL |
| **1.4 i Twin Spark 16V** | E | 1370 | AR33503 | N | 12/96 ▸ 06/01 | 60630383 | **816973** | 549 352 | AL |
| **1.6 i** | E | 1596 | AR33201 | N | 09/94 ▸ 12/96 | 60610662 | **816973** | 549 352 | AL |
| **1.6 i Twin Spark 16V** | E | 1598 | AR32102,AR67601 | N | 12/96 ▸ 06/01 | 60630383 | **816973** | 549 352 | AL |
| **1.7 i 16V** | E | 1712 | AR33401 | N | 09/94 ▸ 12/96 | 60610662 | **816973** | 549 352 | AL |
| **1.8 i Twin Spark 16V**<br>**1.8 i Twin Spark AGV 16V** | E | 1747 | AR32201,AR67106<br>AR67199 | N | 12/96 ▸ 06/01 | 60630383 | **816973** | 549 352 | AL |
| **2.0 i 16V,2.0 i AGV 16V** | E | 1970 | AR32301,AR67204<br>AR67299 | N | 11/95 ▸ 06/01 | 60630383 | **816973** | 549 352 | AL |
| **1.9 JTD** | D | 1910 | AR32302 | N | 03/99 ▸ 06/01 | 60630383 | **816973** | 549 352 | AL |
| **146** | | | | | | | | | |
| **1.3 i** | E | 1351 | AR33501 | N | 12/94 ▸ 12/96 | 60610662 | **816973** | 549 352 | AL |
| **1.4 i Twin Spark 16V** | E | 1370 | AR33503 | N | 12/96 ▸ 06/01 | 60630383 | **816973** | 549 352 | AL |
| **1.6 i** | E | 1596 | AR33201 | N | 12/94 ▸ 12/96 | 60610662 | **816973** | 549 352 | AL |
| **1.6 i Twin Spark 16V** | E | 1598 | AR67601 | N | 12/96 ▸ 06/01 | 60630383 | **816973** | 549 352 | AL |
| **1.7 i 16V** | E | 1712 | AR33401 | N | 12/94 ▸ 12/96 | 60610662 | **816973** | 549 352 | AL |
| **1.8 i Twin Spark 16V**<br>**1.8 i Twin Spark AGV 16V** | E | 1747 | AR32201,AR67106 | N | 12/96 ▸ 06/01 | 60630383 | **816973** | 549 352 | AL |
| **2.0 i 16V**<br>**2.0 i Twin Spark AGV 16V** | E | 1970 | AR32301,AR67204 | N | 10/95 ▸ 06/01 | 60630383 | **816973** | 549 352 | AL |
| **1.9 JTD** | D | 1910 | AR32302 | N | 03/99 ▸ 06/01 | 60630383 | **816973** | 549 352 | AL |
| **1.9 TDs** | D | 1929 | AR33601,AR67501 | N | 12/94 ▸ 06/01 | 60630383 | **816973** | 549 352 | AL |
| **147 (2000>2004)** | | | | | | | | | |
| **1.6 i Twin Spark 16V** | E | 1598 | AR32104, AR37203 | | 10/00 ▸ | 46768973 | **817463** | 574 339 | AL |
| **2.0 i Twin Spark 16V** | E | 1970 | AR32310 | | 10/00 ▸ | 46768973 | **817463** | 574 339 | AL |
| **3.2 i V6 24V** | E | 3179 | 932A.000 | R134 | 02/03 ▸ 09/04 | 60668109 | **817818** | 524 344 | AL |
| **1.9 JTD** | D | 1910 | 937A2.000 | | 10/00 ▸ 09/04 | 46790658 | **817527** | 568 341 | AL |
| **1.9 JTD** | D | 1910 | 192B1.000 | R134 | 12/02 ▸ 09/04 | 60668109 | **817818** | 524 344 | AL |
| **147 (2004>)** | | | | | | | | | |
| **1.9 JTD, 1.9 JTDM** | D | 1910 | 192A5.000, 937A4.000<br>937A5.000 | R134 | 10/04 ▸ | 60668109 | **817818** | 524 344 | AL |
| **155** | | | | | | | | | |
| **1.6 i Twin Spark 16V** | E | 1598 | AR67601 | N | 04/96 ▸ 08/97 | 60610662 | **816973** | 549 352 | AL |
| **1.7 i Twin Spark 16V** | E | 1747 | AR67106 | N | 04/96 ▸ 08/97 | 60610662 | **816973** | 549 352 | AL |
| **1.7 i Twin Spark** | E | 1749 | AR67103 | N | 03/95 ▸ 08/97 | 60610662 | **816973** | 549 352 | AL |
| **2.0 i Twin Spark 16V** | E | 1970 | AR67204,AR67299 | N | 03/95 ▸ 08/97 | 60610662 | **816973** | 549 352 | AL |
| **2.0 i Turbo** | E | 1995 | AR67203 | N | 11/91 ▸ 08/97 | 60807597 | **816973** | 549 352 | AL |
| **156 (97>2003)** | | | | | | | | | |
| **1.6 i Twin Spark 16V**<br>▸ 0325639 | E | 1598 | AR32102, AR32103<br>AR67601 | | 09/97 ▸ 04/00 | 60628820 | **817527** | 568 341 | AL |
| **1.6 i Twin Spark/16V** | E | 1598 | AR32102, AR32104<br>AR67601 | R134 | 04/00 ▸ | 60668109 | **817818** | 524 344 | AL |
| **1.8 i Twin Spark/16V**<br>▸ 0325639 | E | 1747 | AR32201, AR32205 | | 09/97 ▸ 04/00 | 60628820 | **817527** | 568 341 | AL |
| **1.8 i Twin Spark/16V** | E | 1747 | AR32201, AR32205 | R134 | 04/00 ▸ | 60668109 | **817818** | 524 344 | AL |
| **2.0 i Twin Spark/16V**<br>▸ 385548 | E | 1970 | AR32301, AR32310 | | 09/97 ▸ 04/00 | 60628820 | **817527** | 568 341 | AL |
| **2.0 JTS 16V, 2.0 i Twin Spark**<br>**2.0 i Twin Spark 16V** | E | 1970 | 937A1.000, AR32301<br>AR32310 | R134 | 04/00 ▸ 03/03 | 60668109 | **817818** | 524 344 | AL |
| **2.5 i V6 24V**<br>▸ 0325639 | E | 2492 | AR32401, AR32405 | | 09/97 ▸ 04/00 | 60628820 | **817527** | 568 341 | AL |
| **2.5 i V6 24V** | E | 2492 | AR32401, AR32405 | R134 | 04/00 ▸ | 60668109 | **817818** | 524 344 | AL |
| **1.9 JTD**<br>▸ 0325639 | D | 1910 | AR32302 | | 09/97 ▸ 07/00 | 60628820 | **817527** | 568 341 | AL |
| **1.9 JTD, 1.9 JTD 16V**<br>0325640 ▸ | D | 1910 | 192B1.000, 937A2.000<br>AR32302, AR37101 | R134 | 04/00 ▸ 03/03 | 60668109 | **817818** | 524 344 | AL |
| **2.4 JTD**<br>▸ 0325639 | D | 2387 | 839A6.000, AR32501 | | 09/97 ▸ 04/00 | 60628820 | **817527** | 568 341 | AL |
| **2.4 JTD**<br>0325640 ▸ | D | 2387 | 839A6.000, 841C.000<br>AR32501 | R134 | 04/00 ▸ 03/03 | 60668109 | **817818** | 524 344 | AL |

Condenser Condenseur Kondensator Condensatore Condensador Condensor КОНДЕНСЕР Kondenser Kondenzátor Condensator Συμπυκνωτής



• **New** Nouveau **Nuevo** Novo **Nuovo** Nieuw **Neu** Nowość **Yeni** Новый Νέο **Nový**

| | | CC | | | | OE | Valeo | DIM | TECH |
|---|---|---|---|---|---|---|---|---|---|
| **ALFA ROMEO** (.../...) | | | | | | | | | |
| **156 (2003>)** | | | | | | | | | |
| **1.6 i Twin Spark 16V** | E | 1598 | AR32104 | | 04/03 ▸ | 60628820 | **817527** | 568 341 | AL |
| **1.8 i Twin spark 16V** | E | 1747 | AR32205 | | 04/03 ▸ | 60628820 | **817527** | 568 341 | AL |
| **2.0 JTS 16V, 2.0 TwinSpark 16V 2.0 i Twin Spark 16V** | E | 1970 | 932A2.000, 937A1.000 AR32310 | R134 | 04/03 ▸ | 60668109 | **817818** | 524 344 | AL |
| **1.9 JTD, 1.9 JTD 16V** | D | 1910 | 192A5.000, 937A2.000 937A4.000 937A5.000 | R134 | 04/03 ▸ | 60668109 | **817818** | 524 344 | AL |
| **2.4 JTD 10V, 2.4 JTD 20V** | D | 2387 | 841C.000, 841G.000 | R134 | 04/03 ▸ | 60668109 | **817818** | 524 344 | AL |
| **159** | | | | | | | | | |
| **1.8 MPi 16V** | E | 1796 | 939A4.000 | | 07/05 ▸ | 60694767 | **818187** | 613 379 | AL |
| **1.9 JTS 16V** | E | 1859 | 939A6.000 | | 07/05 ▸ | 60694767 | **818187** | 613 379 | AL |
| **2.2 JTS 16V** | E | 2198 | 939A5.000 | | 07/05 ▸ | 60694767 | **818187** | 613 379 | AL |
| **3.2 JTS 24V** | E | 3196 | 939A.000 | | 12/05 ▸ | 60698005 | **818187** | 613 379 | AL |
| **1.9 JTDM 16V** | D | 1910 | 937A7.000, 937A8.000 939A1.000 939A2.000 | | 07/05 ▸ | 60694767 | **818187** | 613 379 | AL |
| **2.4 JTDM 20V** | D | 2387 | 939A3.000 | | 07/05 ▸ | 60698005 | **818187** | 613 379 | AL |
| **166 (98>2003)** | | | | | | | | | |
| **2.5 i V6 24V** | E | 2492 | AR34201 | | 10/98 ▸ 10/00 | 82487879 | **814293** | 488 387 | AL |
| **3.0 i V6 24V** | E | 2959 | AR34301 | | 10/98 ▸ 10/00 | 82487879 | **814293** | 488 387 | AL |
| **BRERA** | | | | | | | | | |
| **2.2 JTS 16V** | E | 2198 | 939A5.000 | | 01/06 ▸ | 50507287 | **818187** | 613 379 | AL |
| **GT** | | | | | | | | | |
| **1.8 i Twinspark 16V** | E | 1747 | AR32205 | | 01/04 ▸ | 60694767 | **818187** | 613 379 | AL |
| **2.0 JTS 16V** | E | 1970 | 932A2.000, 937A1.000 | | 09/03 ▸ | 60694767 | **818187** | 613 379 | AL |
| **1.9 JTD 16V** | D | 1910 | 937A5.000, 937A6.000 | | 09/03 ▸ | 60694767 | **818187** | 613 379 | AL |
| **SPIDER II (2006>)** | | | | | | | | | |
| **2.2 JTS Twin Spark 16V** | E | 2198 | 939A5.000 | | 03/06 ▸ | 50507287 | **818187** | 613 379 | AL |
| **AUDI** | | | | | | | | | |
| **80 (86>91)** | | | | | | | | | |
| **1.4** | E | 1405 | SE | | 09/86 ▸ | 893260403 | **814291** | 613 307 | AL |
| **1.6** | E | 1595 | PP,RN,RNA | | 09/86 ▸ | 893260403 | **814291** | 613 307 | AL |
| **1.8,1.8 i** | E | 1781 | DZ,JN,JV,NE,PM,RU,SF | | 09/86 ▸ | 893260403 | **814291** | 613 307 | AL |
| **1.9 i** | E | 1857 | SD | | 08/86 ▸ | 893260403 | **814291** | 613 307 | AL |
| **1.6 D,1.6 TD** | D | 1588 | JK,RA | | 02/87 ▸ | 893260403 | **814291** | 613 307 | AL |
| **80 (91>95)** | | | | | | | | | |
| **1.6 i** | E | 1595 | ABB | | 03/92 ▸ | 8A0260403D | **814286** | 618 338 | AL |
| **2.0 E** | E | 1984 | ADW | | 12/93 ▸ 06/95 | 8A0260403AC | **814296** | 359 499 | AL |
| **2.0 E,2.0 E 16V,2.0 S,2.0 i 16V** | E | 1984 | 6A,ABK,ABT,ACE | | 09/91 ▸ | 8A0260403D | **814286** | 618 338 | AL |
| **2.2 i Turbo 20V** | E | 2226 | ABY | | 02/93 ▸ 06/95 | 8A0260403AC | **814296** | 359 499 | AL |
| **2.3 E** | E | 2309 | NG | | 09/91 ▸ 06/95 | 8A0260403AC | **814296** | 359 499 | AL |
| **2.3 E** | E | 2309 | NG | | 09/91 ▸ | 893260403L | **814288** | 359 499 | AL |
| **2.6 E V6** | E | 2598 | ABC | | 07/92 ▸ | 8A0260403D | **814286** | 618 338 | AL |
| **2.8 i V6** | E | 2771 | AAH | | 09/91 ▸ | 8A0260403D | **814286** | 618 338 | AL |
| **90 (84>87)** | | | | | | | | | |
| **1.8 i** | E | 1781 | JN | | 06/84 ▸ 07/86 | 893260403 | **814291** | 613 307 | AL |
| **2.0 i** | E | 1994 | HP,JL,JS | | 10/84 ▸ 07/86 | 893260403L | **814288** | 359 499 | AL |
| **2.2 i** | E | 2226 | HY,JT,KV | | 06/84 ▸ 03/87 | 893260403L | **814288** | 359 499 | AL |
| **90 (87>91)** | | | | | | | | | |
| **2.0 i,2.0 i 20V** | E | 1994 | NM,PS | | 04/87 ▸ 12/91 | 893260403L | **814288** | 359 499 | AL |
| **2.2 i** | E | 2226 | KV | | 04/87 ▸ 12/91 | 893260403L | **814288** | 359 499 | AL |
| **2.3 i,2.3 i 20V** | E | 2309 | 7A,NG | | 04/87 ▸ 1992 | 893260403L | **814288** | 359 499 | AL |
| **1.6 TD** | D | 1588 | RA | | 04/88 ▸ | 893260403 | **814291** | 613 307 | AL |
| **100 (82>90)** | | | | | | | | | |
| **1.8,1.8 i** | E | 1781 | 4B,DR | | 01/88 ▸ 07/89 | 443260403F | **814295** | 564 307 | AL |

| | | CC | | | | OE | Valeo | DIM | TECH |
|---|---|---|---|---|---|---|---|---|---|
| **AUDI** (.../...) | | | | | | | | | |
| **100 (82>90) (.../...)** | | | | | | | | | |
| **2.0 i** | E | 1994 | RT | | 01/88 ▸ 12/90 | 443260403F | **814295** | 564 307 | AL |
| **2.2 i** | E | 2144 | WC | | 05/83 ▸ 07/90 | 443260403F | **814295** | 564 307 | AL |
| **2.2 Turbo,2.2 i,2.2 i Turbo** | E | 2226 | HX,KF,KU,MC | | 08/86 ▸ 12/90 | 443260403F | **814295** | 564 307 | AL |
| **2.3 i** | E | 2309 | NF | | 01/88 ▸ 12/90 | 443260403F | **814295** | 564 307 | AL |
| **2.0 D,2.0 TD** | D | 1986 | CN,NC | | 05/83 ▸ 12/90 | 443260403F | **814295** | 564 307 | AL |
| **2.4 D** | D | 2370 | 3D | | 08/89 ▸ 12/90 | 443260403F | **814295** | 564 307 | AL |
| **2.5 TDi** | D | 2460 | 1T | | 01/90 ▸ 12/90 | 443260403F | **814295** | 564 307 | AL |
| **200 (83>90)** | | | | | | | | | |
| **2.2 Turbo** | E | 2226 | 1B,2B,MC | | 08/85 ▸ 12/90 | 443260403F | **814295** | 564 307 | AL |
| **2.3 Turbo 20V** | E | 2309 | 3B | | 08/88 ▸ 12/90 | 443260403F | **814295** | 564 307 | AL |
| **CABRIOLET** | | | | | | | | | |
| **2.3 E** | E | 2309 | NG | | 06/91 ▸ 07/94 | 893260403L | **814288** | 359 499 | AL |
| **COUPÉ (88>96)** | | | | | | | | | |
| **2.0 i 16V** | E | 1984 | 6A | | 01/92 ▸ | 8A0260403D | **814286** | 618 338 | AL |
| **2.0 E 20V** | E | 1994 | NM | | 11/88 ▸ 07/91 | 893260403L | **814288** | 359 499 | AL |
| **2.2 i** | E | 2226 | KV | | 11/88 ▸ 07/91 | 893260403L | **814288** | 359 499 | AL |
| **2.2 i Turbo 20V** | E | 2226 | ABY | | 08/92 ▸ 05/95 | 8A0260403AC | **814296** | 359 499 | AL |
| **2.3 E** | E | 2309 | NG | | 11/88 ▸ 07/94 | 8A0260403AC | **814296** | 359 499 | AL |
| **2.3 E,2.3 Turbo 20V,2.3 i 20V** | E | 2309 | 3B,7A,NG | | 11/88 ▸ | 893260403L | **814288** | 359 499 | AL |
| **2.6 E V6** | E | 2598 | ABC | | 08/92 ▸ | 8A0260403D | **814286** | 618 338 | AL |
| **2.8 i V6** | E | 2771 | AAH | | 08/91 ▸ | 8A0260403D | **814286** | 618 338 | AL |
| **RS2 (94>95)** | | | | | | | | | |
| **2.2 Turbo** | E | 2226 | ADU | | 03/94 ▸ 06/95 | 8A0260403AC | **814296** | 359 499 | AL |
| **A2** | | | | | | | | | |
| **1.4 i 16V** | E | 1390 | AUA, BBY | | 07/01 ▸ | 8Z0260403D | **817570** | 508 401 | AL |
| **1.6 FSI** | E | 1595 | BAD | | 01/02 ▸ | 8Z0260403D | **817570** | 508 401 | AL |
| **1.2 TDi** 8Z-2-000001 ▸ | D | 1191 | ANY | | 07/01 ▸ | 8Z0260403D | **817570** | 508 401 | AL |
| **1.4 TDi** 8Z-2-000001 ▸ | D | 1422 | AMF, BHC | | 07/01 ▸ | 8Z0260403D | **817570** | 508 401 | AL |
| **A3 (96>2003)** | | | | | | | | | |
| **1.6 i** | E | 1595 | AEH, AKL, APF, AVU BFQ | | 09/96 ▸ 06/03 | 1J0820413N | **817244** | 548 361 | AL |
| **1.8 i 20V, 1.8 i Turbo 20V** | E | 1781 | AGN/U, AJQ, APG/P AQA, ARX, ARY/Z AUM, AUQ | | 09/96 ▸ 06/03 | 1J0820413N | **817244** | 548 361 | AL |
| **1.9 TDi** | D | 1896 | AGR, AHF, ALH, ASV ASZ, ATD, AXR | | 09/96 ▸ 06/03 | 1J0820413N | **817244** | 548 361 | AL |
| **A3 (2003>2008)** | | | | | | | | | |
| **1.6 i** | E | 1595 | BGU, BSE, BSF | +/ R134 | 05/03 ▸ | 1K0820411H | **817777** | 584 401 | AL |
| **1.6 FSi** | E | 1598 | BAG, BLF, BLP | +/ R134 | 08/03 ▸ | 1K0820411E | **817777** | 584 401 | AL |
| **1.8 TFSi** | E | 1798 | BYT | +/ R134 | 08/06 ▸ | 1K0820411H | **817777** | 584 401 | AL |
| **2.0 FSi, 2.0 FSi 16V 2.0 TFSi 16V** | E | 1984 | AXW, AXX, BLR, BLX BLY, BMB, BVY, BVZ BWA | +/ R134 | 05/03 ▸ | 1K0820411H | **817777** | 584 401 | AL |
| **3.2 i V6 24V** | E | 3189 | BDB, BMJ, BUD | +/ R134 | 07/03 ▸ | 1K0820411E | **817777** | 584 401 | AL |
| **1.9 TDi** | D | 1896 | BKC, BLS, BXE | +/ R134 | 06/03 ▸ | 1K0820411H | **817777** | 584 401 | AL |
| **2.0 TDi, 2.0 TDi 16V** | D | 1968 | BMM/N, AZV, BKD BUY | +/ R134 | 05/03 ▸ | 1K0820411E | **817777** | 584 401 | AL |
| **A3 (2008>)** | | | | | | | | | |
| **1.4 TFSi** | E | 1390 | CAX | +/ R134 | 01/08 ▸ | 1K0820411P | **817777** | 584 401 | AL |
| **1.8 TFSi 16V** | E | 1798 | CDA | +/ R134 | 07/08 ▸ | 1K0820411P | **817777** | 584 401 | AL |
| **2.0 TFSi 16V** | E | 1984 | CCZ | +/ R134 | 07/08 ▸ | 1K0820411P | **817777** | 584 401 | AL |
| **A4 (94>2000)** | | | | | | | | | |
| **1.6 i** | E | 1595 | ADP, AHL, ANA, ARM | | 11/94 ▸ 11/00 | 8D0260403C | **816967** | 575 421 | AL |
| **1.8 i, 1.8 i 20V 1.8 i Turbo 20V** | E | 1781 | ADR, AEB, AFY, AJL ANB, APT, APU, ARG ARK, AWT | | 11/94 ▸ 11/00 | 8D0260403H | **816967** | 575 421 | AL |

Condenser Condenseur Kondensator Condensatore Condensor Condensador КОНДЕНСЕР Kondenser Kondenzátor Condensator Συμπυκνωτής



• **New** Nouveau **Nuevo** Novo **Nuovo** Nieuw **Neu** Nowość **Yeni** Новый Νέο **Novy**

| | | CC | | | | OE | Valeo | DIM | TECH |
|---|---|---|---|---|---|---|---|---|---|
| **A4 (94>2000) (.../...)** | | | | | | | | | |
| **2.4 i V6, 2.4 i V6 30V** | E | 2393 | AFM, AGA, AJG, ALF AML, APS, APZ, ARJ | | 07/95 ▸ 11/00 | 8D0260403H | **816967** | 575 421 | AL |
| **2.6 i V6** ▸ 8D-T-200000 | E | 2598 | ABC, ACZ | | 11/94 ▸ 12/98 | 8D0260403C | **816967** | 575 421 | AL |
| **2.7 i V6 30V** | E | 2671 | AGB | | 02/99 ▸ 10/00 | 8D0260403G | **817840** | 578 421 | AL |
| **2.8 i V6, 2.8 i V6 30V** ▸ 8D-V-400 000 | E | 2771 | AAH, ACK, ALG, AMX APR, AQD, ATQ, ATX | | 11/94 ▸ 11/00 | 8D0260403C | **816967** | 575 421 | AL |
| **1.9 TDi** ▸ 8D-V-400 000 | D | 1896 | 1Z, AFF, AFN, AHU AVG | | 11/94 ▸ 11/00 | 8D0260403H | **816967** | 575 421 | AL |
| **1.9 TDi** | D | 1896 | AHH, AJM, ATJ | | 08/97 ▸ 09/01 | 8D0260403G | **817840** | 578 421 | AL |
| **2.5 TDi V6, 2.5 TDi V6 24V** | D | 2496 | AFB, AKN | | 11/97 ▸ 09/01 | 8D0260403G | **817840** | 578 421 | AL |
| **A4 (2000>2004)** | | | | | | | | | |
| **1.6 i** ▸ 8E-3-320 000 | E | 1595 | ALZ | | 12/00 ▸ 01/03 | 8E0260403B | **817569** | 608 401 | AL |
| **1.6 i** 8E-3-320 001 ▸ | E | 1595 | ALZ | | 01/03 ▸ 12/04 | 8E0260403D | **817741** | 568 401 | AL |
| **1.8 i Turbo 20V** ▸ 8E-3-320 000 | E | 1781 | AMB, AVJ, BEX, BFB | | 12/00 ▸ 01/03 | 8E0260403B | **817569** | 608 401 | AL |
| **1.8 i Turbo 20V** 8E-3-320 001 ▸ | E | 1781 | AMB, AVJ, BEX, BFB | | 01/03 ▸ | 8E0260403D | **817741** | 568 401 | AL |
| **2.0 FSI, 2.0 i** ▸ 8E-3-320 000 | E | 1984 | ALT, AWA | | 12/00 ▸ 01/03 | 8E0260403B | **817569** | 608 401 | AL |
| **2.0 FSI, 2.0 i** 8E-3-320 001 ▸ | E | 1984 | ALT, AWA | | 01/03 ▸ 12/04 | 8E0260403D | **817741** | 568 401 | AL |
| **2.4 i V6, 2.4 i V6 30V** ▸ 8E-3-320 000 | E | 2393 | AMM, BDV | | 09/01 ▸ 01/03 | 8E0260403B | **817569** | 608 401 | AL |
| **2.4 i V6, 2.4 i V6 30V** 8E-3-320 001 ▸ | E | 2393 | AMM, BDV | | 01/03 ▸ 12/04 | 8E0260403D | **817741** | 568 401 | AL |
| **3.0 i 30V, 3.0 i V6 30V** ▸ 8E-3-320 000 | E | 2976 | ASN, AVK, BBJ | | 12/00 ▸ 01/03 | 8E0260403B | **817569** | 608 401 | AL |
| **3.0 i 30V, 3.0 i V6 30V** 8E-3-320 001 ▸ | E | 2976 | ASN, AVK, BBJ | | 01/03 ▸ 12/04 | 8E0260403D | **817741** | 568 401 | AL |
| **1.9 TDi** ▸ 8E-3-320 000 | D | 1896 | AVB, AVF, AWX | | 12/00 ▸ 01/03 | 8E0260403B | **817569** | 608 401 | AL |
| **1.9 TDi** 8E-3-320 001 ▸ | D | 1896 | AVB, AVF, AWX | | 01/03 ▸ 12/04 | 8E0260403D | **817741** | 568 401 | AL |
| **2.5 TDi V6, 2.5 TDi V6 24V** ▸ 8E-3-320 000 | D | 2496 | AKE, AYM, BDH, BFC | | 12/00 ▸ 01/03 | 8E0260403B | **817569** | 608 401 | AL |
| **2.5 TDi 24V, 2.5 TDi V6 2.5 TDi V6 24V** 8E-3-320 001 ▸ | D | 2496 | AKE, BAU, BCZ, BDG BDH, BFC | | 01/03 ▸ 12/04 | 8E0260403D | **817741** | 568 401 | AL |
| **A4 (2004>)** | | | | | | | | | |
| **1.6 i** | E | 1595 | ALZ | | 11/04 ▸ | 8E0260403R | **818190** | 608 381 | AL |
| **1.8 i Turbo 20V** | E | 1781 | BFB | | 11/04 ▸ | 8E0260403R | **818190** | 608 381 | AL |
| **2.0 i 20V, 2.0 TFSi 16V** | E | 1984 | ALT, BGB, BWE | | 11/04 ▸ | 8E0260403R | **818190** | 608 381 | AL |
| **2.0 TFSi 16V** | E | 1996 | BUL | | 11/04 ▸ | 8E0260403R | **818190** | 608 381 | AL |
| **3.0 i 30V** | E | 2976 | BBJ | | 11/04 ▸ | 8E0260403P | **818190** | 608 381 | AL |
| **3.2 i FSi V6 24V** | E | 3123 | AUK | | 11/04 ▸ | 8E0260403P | **818190** | 608 381 | AL |
| **1.9 TDi** | D | 1896 | BKE, BRB | | 11/04 ▸ | 8E0260403R | **818190** | 608 381 | AL |
| **2.0 TDi, 2.0 TDi 16V** | D | 1968 | BLB, BNA, BPW BRD/E/F, BVF | | 11/04 ▸ | 8E0260403R | **818190** | 608 381 | AL |
| **2.5 TDi V6 24V** 8E-5-533 001 ▸ | D | 2496 | BCZ, BDG | | 05/05 ▸ | 8E0260403R | **818190** | 608 381 | AL |
| **2.7 TDi 24V** | D | 2698 | BPP, BSG | | 01/06 ▸ | 8E0260403R | **818190** | 608 381 | AL |
| **3.0 TDi V6 24V** ▸ 8E-5-475 000 | D | 2967 | ASB, BKN | | 11/04 ▸ | 8E0260403J | **818190** | 608 381 | AL |
| **A4 CABRIOLET (2002>2006)** | | | | | | | | | |
| **1.8 i Turbo 20V** ▸ 8H-3-026 000 | E | 1781 | BFB | | 07/02 ▸ 01/03 | 8E0260403B | **817569** | 608 401 | AL |
| **1.8 i Turbo 20V** 8H-3-026 001 ▸ | E | 1781 | BFB | | 01/03 ▸ 12/05 | 8E0260403D | **817741** | 568 401 | AL |
| **2.0 i 20V** | E | 1984 | ALT | | 11/04 ▸ 12/05 | 8E0260403D | **817741** | 568 401 | AL |
| **2.4 i V6 30V** ▸ 8H-3-026 000 | E | 2393 | AMM, BDV | | 04/02 ▸ 01/03 | 8E0260403B | **817569** | 608 401 | AL |
| **2.4 i V6 30V** | E | 2393 | AMM, BDV | | 01/03 ▸ 12/05 | 8E0260403D | **817741** | 568 401 | AL |

# AUDI (.../...)

| | | CC | | | | OE | Valeo | DIM | TECH |
|---|---|---|---|---|---|---|---|---|---|
| **A4 CABRIOLET (2002>2006) (.../...)** | | | | | | | | | |
| **3.0 i V6 30V** ▸ 8H-3-026 000 | E | 2976 | ASN, BBJ | | 04/02 ▸ 01/03 | 8E0260403B | **817569** | 608 401 | AL |
| **3.0 i V6 30V** | E | 2976 | ASN, BBJ | | 01/03 ▸ 12/05 | 8E0260403D | **817741** | 568 401 | AL |
| **2.5 TDI V6** ▸ 8H-3-026 000 | D | 2496 | BFC | | 08/02 ▸ 01/03 | 8E0260403B | **817569** | 608 401 | AL |
| **2.5 TDI V6** | D | 2496 | BCZ, BDG, BFC | | 01/03 ▸ 12/05 | 8E0260403D | **817741** | 568 401 | AL |
| **A4 CABRIOLET (2006>)** | | | | | | | | | |
| **1.8 i Turbo 20V** | E | 1781 | BFB | | 01/06 ▸ | 8E0260403T | **817741** | 568 401 | AL |
| **2.0 TFSi 16V** | E | 1996 | BWE | | 01/06 ▸ | 8E0260403T | **817741** | 568 401 | AL |
| **3.2 i FSi V6 24V** | E | 3123 | AUK | | 01/06 ▸ | 8E0260403Q | **817741** | 568 401 | AL |
| **2.0 TDi, 2.0 TDi 16V** | D | 1968 | BPW, BRC | | 01/06 ▸ | 8E0260403N | **817741** | 568 401 | AL |
| **3.0 TDi V6 24V** | D | 2967 | ASB, BKN | | 01/06 ▸ | 8E0260403R | **818190** | 608 381 | AL |
| **A6 (97>2001)** | | | | | | | | | |
| **1.8 i 20V, 1.8 i Turbo 20V** | E | 1781 | AEB, AFY, AJL, AJP ANB, APU, AQE, ARH ARK, AWT | | 04/97 ▸ 05/01 | 4B0260403T | **817666** | 618 421 | AL |
| **2.4 i V6** | E | 2393 | AGA, AJG, ALF/W AML/M, APC/S/Z, ARJ ARN | | 04/97 ▸ 05/01 | 4B0260403T | **817666** | 618 421 | AL |
| **2.7 i V6 Bi turbo** | E | 2671 | AJK, AZA | | 01/98 ▸ 05/01 | 4B0260403S | **817997** | 578 421 | AL |
| **2.8 i V6 30V** | E | 2771 | ACK, AGE, ALG, AMX APR, AQD, ATX | | 04/97 ▸ 05/01 | 4B0260403T | **817666** | 618 421 | AL |
| **1.9 TDi** ▸ 4B-2-010000 | D | 1896 | AJM | | 04/97 ▸ 05/01 | 4B0260403S | **817997** | 578 421 | AL |
| **1.9 TDi** 4B-2-010001 ▸ | D | 1896 | AFN, AVG | | 04/97 ▸ 05/01 | 4B0260403T | **817666** | 618 421 | AL |
| **2.5 TDi V6** | D | 2496 | AFB, AKE, AKN | | 04/97 ▸ 05/01 | 4B0260403AA | **817665** | 598 391 | AL |
| **A6 (2001>2004)** | | | | | | | | | |
| **1.8 i Turbo 20V** | E | 1781 | AWT | | 06/01 ▸ | 4B0260403T | **817666** | 618 421 | AL |
| **2.0 i, 2.0 i 20V** | E | 1984 | ALT | | 06/01 ▸ | 8E0260403B | **817569** | 608 401 | AL |
| **2.4 i V6 30V** | E | 2393 | AMM, ASM, BDV | | 06/01 ▸ | 4B0260403T | **817666** | 618 421 | AL |
| **2.7 i V6 Bi Turbo** | E | 2671 | ARE, BES | | 06/01 ▸ | 4B0260403S | **817997** | 578 421 | AL |
| **3.0 i V6 30V** | E | 2976 | ASN, BBJ | | 06/01 ▸ | 8E0260403B | **817569** | 608 401 | AL |
| **1.9 TDi** | D | 1896 | AVF, AWX | | 06/01 ▸ | 4B0260403T | **817666** | 618 421 | AL |
| **2.5 TDi V6** | D | 2496 | AKE, AYM, BAU, BDH BFC | | 06/01 ▸ | 4B0260403AA | **817665** | 598 391 | AL |
| **2.5 TDi V6** | D | 2496 | BCZ, BDG | | 02/03 ▸ | 8E0260403D | **817741** | 568 401 | AL |
| **A6 (2004>)** | | | | | | | | | |
| **2.0 TFSi 16V** | E | 1984 | BPJ | | 06/05 ▸ | 4F0260403E | **814004** | 658 401 | AL |
| **2.4 i V6 24V** | E | 2393 | BDW | | 04/04 ▸ | 4F0260403E | **814004** | 658 401 | AL |
| **2.8 FSi V6 24V** | E | 2773 | BDX | | 11/06 ▸ 05/07 | 4F0260403E | **814004** | 658 401 | AL |
| **3.0 V6 30V** | E | 2976 | BBJ | | 04/04 ▸ | 4F0260403E | **814004** | 658 401 | AL |
| **3.2 FSi V6 24V** | E | 3123 | AUK | | 04/04 ▸ | 4F0260403E | **814004** | 658 401 | AL |
| **4.2 FSi V8 32V** | E | 4163 | BAT, BVJ | | 04/04 ▸ | 4F0260403E | **814004** | 658 401 | AL |
| **2.0 TDi 16V** | D | 1968 | BLB, BNA, BRE, BRF BVG | | 07/04 ▸ | 4F0260403E | **814004** | 658 401 | AL |
| **2.7 TDi V6 24V** | D | 2698 | BPP, BSG | | 11/04 ▸ | 4F0260403E | **814004** | 658 401 | AL |
| **3.0 TDi V6 24V** | D | 2967 | ASB, BMK, BNG | | 04/04 ▸ | 4F0260403E | **814004** | 658 401 | AL |
| **A6 ALLROAD** | | | | | | | | | |
| **2.7 i V6 Turbo** | E | 2671 | BES | | 07/02 ▸ | 4B0260403S | **817997** | 578 421 | AL |
| **4.2 i V8 40V** | E | 4172 | BAS | | 09/02 ▸ | 8E0260403B | **817569** | 608 401 | AL |
| **RS4 QUATTRO** | | | | | | | | | |
| **2.7 i V6 Bi Turbo 30V** | E | 2671 | ASJ | | 06/00 ▸ 10/00 | 8D0260403G | **817840** | 578 421 | AL |
| **2.8 i V6 Bi Turbo 30V** | E | 2771 | AZR | | 11/00 ▸ 09/01 | 8D0260403G | **817840** | 578 421 | AL |
| **S3 (96>2003)** | | | | | | | | | |
| **1.8 i Turbo 20V** | E | 1781 | AMK, APY | | 11/98 ▸ 04/02 | 1J0820413N | **817244** | 548 361 | AL |
| **S3 (2006>)** | | | | | | | | | |
| **2.0 TFSi 16V** | E | 1984 | BHZ, BZC | +/ R134 | 10/06 ▸ | 1K0820411P | **817777** | 584 401 | AL |

Condenser Condenseur Kondensator Condensatore Condensador Condensor КОНДЕНСЕР Kondenser Kondenzátor Condensator Συμπυκνωτής



• **New** Nouveau **Nuevo** Novo **Nuovo** Nieuw **Neu** Nowość **Yeni** Новый Νέο **Novy**

| | | CC | | | | OE | Valeo | DIM | TECH |
|---|---|---|---|---|---|---|---|---|---|
| **AUDI (.../...)** | | | | | | | | | |
| **S4 (97>2001)** | | | | | | | | | |
| **2.7 i V6 30V** | E | 2671 | AGB, APB | | 10/97 ▸ 09/01 | 8D0260403G | **817840** | 578 421 | AL |
| **S4 (2003>2008)** | | | | | | | | | |
| **4.2 i V8 40V** | E | 4163 | BBK | | 03/03 ▸ | 8E0260403R | **818190** | 608 381 | AL |
| **S4 CABRIOLET (2004>)** | | | | | | | | | |
| **4.2 i V8 40V** | E | 4163 | BBK | | 02/04 ▸ | 8E0260403R | **818190** | 608 381 | AL |
| **TT (98>2006)** | | | | | | | | | |
| **1.8 i Turbo 20V** ▸ 8N-3-050000 | E | 1781 | AJQ, APP, APX, ARY AUM, AUQ, BAM | | 10/98 ▸ | 1J0820413N | **817244** | 548 361 | AL |
| **3.2 i V6** ▸ 8N-3-050000 | E | 3189 | BHE | | 07/03 ▸ 07/04 | 1J0820413N | **817244** | 548 361 | AL |
| **TT (2006>)** | | | | | | | | | |
| **2.0 TFSi 16V** | E | 1984 | BWA, CDL | + R134 | 08/06 ▸ | 1K0820411P | **817777** | 584 401 | AL |
| **3.2 i V6 24V** | E | 3189 | BUB | + R134 | 08/06 ▸ | 1K0820411P | **817777** | 584 401 | AL |
| **BMW** | | | | | | | | | |
| **1 SERIES E81** | | | | | | | | | |
| **1.6 i 16V** | E | 1597 | N43B16A | | 09/07 ▸ | 64509169772 | **814011** | 628 401 | AL |
| **2.0 i 16V** | E | 1995 | N43B/20O0/20U0 | | 01/07 ▸ | 64509169772 | **814011** | 628 401 | AL |
| **3.0 i 24V** | E | 2979 | N54B30O0 | | 03/08 ▸ | 64509169791 | **814011** | 628 401 | AL |
| **3.0 i 24V** | E | 2996 | N52B/30O1/30U1 | | 01/07 ▸ | 64509169791 | **814011** | 628 401 | AL |
| **2.0 d 16V** | D | 1995 | N47D/20O0/20B/20U0/20TO | | 01/07 ▸ | 64539169526 | **814012** | 628 341 | AL |
| **1 SERIES E87** | | | | | | | | | |
| **116i** | E | 1596 | N45B16 | | 09/04 ▸ 02/07 | 64536930038 | **814011** | 628 401 | AL |
| **118i, 120i** | E | 1995 | N46B/20O1/20U1 | | 09/04 ▸ 02/07 | 64509169791 | **814011** | 628 401 | AL |
| **130i** | E | 2996 | N52B30A | | 07/05 ▸ 02/07 | 64509169791 | **814011** | 628 401 | AL |
| **118d, 120d** | D | 1995 | M47D/20TU2/20U2 | | 09/04 ▸ 02/07 | 64539169526 | **814012** | 628 341 | AL |
| **1 SERIES E87 LCI** | | | | | | | | | |
| **1.6 i 16V** | E | 1596 | N45B16 | | 03/07 ▸ | 64536930038 | **814011** | 628 401 | AL |
| **1.6 i 16V** | E | 1597 | N43B16O0 | | 09/07 ▸ | 64509169772 | **814011** | 628 401 | AL |
| **2.0 i 16V** | E | 1995 | N43B/20U0/20O0 | | 03/07 ▸ | 64509169772 | **814011** | 628 401 | AL |
| **3.0 i 24V** | E | 2996 | N52B30O1 | | 03/07 ▸ | 64509169791 | **814011** | 628 401 | AL |
| **2.0 d 16V** | D | 1995 | N47D/20U0/20O0/20TO | | 03/07 ▸ | 64539169526 | **814012** | 628 341 | AL |
| **1 SERIES F20** | | | | | | | | | |
| **114i, 116i, 118i, 125i** | E | | N13B16U0, N13B16M0 | | 10/11 ▸ | 64539218121 | **814189** | 605 348 | AL |
| **125i** | E | | N20 /2 00l 4 CYL TURBO | | 10/11 ▸ | 64539218123 | **814191** | 605 399 | AL |
| **116d, 118d, 120d, 125d** | D | | N47D20K1, N47D20U1 N47D20O1 | | 10/11 ▸ | 64539218121 | **814189** | 605 348 | AL |
| **3 SERIES E46** | | | | | | | | | |
| **316i, 316ti** | E | 1796 | N42B/18VVT/18 | | 05/01 ▸ | 64538377614 | **817383** | 565 421 | AL |
| **316i, 318Ci, 318i** | E | 1895 | M43B19-E46 | | 03/98 ▸ | 64538377614 | **817383** | 565 421 | AL |
| **320Ci, 320i** | E | 1991 | M52B20-EU3 | | 03/98 ▸ 09/01 | 64538377614 | **817383** | 565 421 | AL |
| **318Ci, 318i, 318ti** | E | 1995 | M43B20 N42B/20VVT/20 | | 09/01 ▸ | 64538377614 | **817383** | 565 421 | AL |
| **320Ci, 320i** | E | 2171 | M54B22 | | 07/00 ▸ | 64538377614 | **817383** | 565 421 | AL |
| **323Ci, 323i, 325Ci, 325i, 325ti 325xi** | E | 2494 | M52B25-EU3 M54B/25/25-EU4 | | 03/98 ▸ | 64538377614 | **817383** | 565 421 | AL |
| **328Ci, 328i** | E | 2793 | M52B28-EU3 | | 03/98 ▸ 12/00 | 64538377614 | **817383** | 565 421 | AL |
| **330Ci, 330i, 330xi** | E | 2979 | M54B/30-231/30 | | 01/99 ▸ | 64538377614 | **817383** | 565 421 | AL |
| **318d, 320d** | D | 1951 | M47D/20UL/20 | | 03/98 ▸ | 64538377648 | **817405** | 518 311 | AL |
| **318d, 320Cd, 320d** | D | 1995 | M47D/20TU/20TUUL | | 09/01 ▸ | 64538377648 | **817405** | 518 311 | AL |
| **330d, 330xd** | D | 2926 | M57D30-183 | | 09/99 ▸ | 64538377648 | **817405** | 518 311 | AL |
| **330Cd, 330d, 330xd** | D | 2993 | M57D/30TU/30-204 | | 09/01 ▸ | 64538377648 | **817405** | 518 311 | AL |
| **3 SERIES E90** | | | | | | | | | |
| **316i** | E | 1596 | N45B16 | | 03/05 ▸ 01/07 | 64509169772 | **814011** | 628 401 | AL |
| **316i** | E | 1597 | N43B16A | | 02/07 ▸ | 64509169791 | **814011** | 628 401 | AL |
| **316i** | E | 1796 | N42B18VVT | | 02/06 ▸ | 64536930040 | **814011** | 628 401 | AL |

# BMW (.../...)

## 3 SERIES E90 (.../...)

| | | CC | | | | OE | Valeo | DIM | TECH |
|---|---|---|---|---|---|---|---|---|---|
| **318i,320i** | E | 1995 | N43B/20U0/20O0<br>N46B/20O1/20U1 | | 03/05 ▸ | 64509169791 | **814011** | 628 401 | AL |
| **320si** | E | 1997 | N45B20A | | 02/06 ▸ | 64509169772 | **814011** | 628 401 | AL |
| **325i,325xi** | E | 2497 | N52B25O0 | | 03/05 ▸ | 64509169791 | **814011** | 628 401 | AL |
| **335i, 335xi** | E | 2979 | N54B30O0 | | 06/06 ▸ | 64539169526 | **814012** | 628 341 | AL |
| **325i,325xi,330i,330xi** | E | 2996 | N52B/30O0, N52B30A<br>N53B/30U0/30O0 | | 03/05 ▸ | 64509169791 | **814011** | 628 401 | AL |
| **318d, 320d** | D | 1995 | M47D20TU2/U2<br>N47D20O0/U0, | | 03/05 ▸ | 64539169526 | **814012** | 628 341 | AL |
| **325d, 330d, 330xd, 335d** | D | 2993 | M57D30O2/T2/U2 | | 09/05 ▸ | 64539169526 | **814012** | 628 341 | AL |

## 3 SERIES

| | | | | | | | | | |
|---|---|---|---|---|---|---|---|---|---|
| **316i** | E | 1597 | N20B20U0 | | 10/11 ▸ | 64539218121 | **814189** | 605 348 | AL |
| **320i** | E | 1951 | N20B20O0 | | 10/11 ▸ | 64539218121 | **814189** | 605 348 | AL |
| **328i** | E | 2793 | N55B30 | | 10/11 ▸ | 64539218121 | **814189** | 605 348 | AL |
| **335i** | E | 2979 | N55B30O0 | | 10/11 ▸ | 64539218121 | **814189** | 605 348 | AL |
| **320ih, 335ih** | E | 1951 | B48B20M0, B48B20O0<br>B48B20O0, N57D30T1 | | 02/12 ▸ | 64539218122 | **814190** | 605 348 | AL |
| **320i, 328i** | E | 1951 | N20 | | 10/11 ▸ | 64539218123 | **814191** | 605 399 | AL |
| **316d, 318d, 320d, 325d, 330d** | D | | N47D20O1, N47D20O1<br>N47D20T1, N57D30O1 | | 10/11 ▸ | 64539218121 | **814189** | 605 348 | AL |
| **335d** | D | 2979 | 2,00l 4 CYL TURBO | | 10/11 ▸ | 64539218123 | **814191** | 605 399 | AL |

## 5 SERIES E39

| | | | | | | | | | |
|---|---|---|---|---|---|---|---|---|---|
| **520i** | E | 1991 | M52B20 | | 07/94 ▸ 09/97 | 64538391647 | **817248** | 458 421 | AL |
| **520i** | E | 1991 | M52B/20/20-EU3 | | 10/97 ▸ 04/04 | 64538378438 | **817607** | 458 421 | AL |
| **520i** | E | 2171 | M54B22 | | 07/00 ▸ 04/04 | 64538378438 | **817607** | 458 421 | AL |
| **523i** | E | 2494 | M52B25 | | 07/94 ▸ 09/97 | 64538391647 | **817248** | 458 421 | AL |
| **523i, 525i** | E | 2494 | M52B/25/25-EU3<br>M54B/25 | | 10/97 ▸ 04/04 | 64538378438 | **817607** | 458 421 | AL |
| **528i** | E | 2793 | M52B28 | | 07/94 ▸ 09/97 | 64538391647 | **817248** | 458 421 | AL |
| **528i** | E | 2793 | M52B/28/28-EU3 | | 10/97 ▸ 04/04 | 64538378438 | **817607** | 458 421 | AL |
| **530i** | E | 2979 | M54B30-231 | | 07/00 ▸ 04/04 | 64538378438 | **817607** | 458 421 | AL |
| **535i** | E | 3498 | M62B35 | | 07/94 ▸ 09/97 | 64538391647 | **817248** | 458 421 | AL |
| **535i** | E | 3498 | M62B/35/35-245 | | 10/97 ▸ 04/03 | 64538378438 | **817607** | 458 421 | AL |
| **540i** | E | 4398 | M62B44 | | 07/94 ▸ 09/97 | 64538391647 | **817248** | 458 421 | AL |
| **540i** | E | 4398 | M62B/44/44-285 | | 10/97 ▸ 04/04 | 64538378438 | **817607** | 458 421 | AL |
| **520d** | D | 1951 | M47D20 | | 01/00 ▸ 05/02 | 64538375513 | **817561** | 588 321 | AL |
| **520d** | D | 1995 | M47D20TU | | 06/02 ▸ 04/04 | 64538375513 | **817561** | 588 321 | AL |
| **525Td, 525Tds** | D | 2497 | M51D25 | | 07/94 ▸ 09/97 | 64538391647 | **817248** | 458 421 | AL |
| **525Td, 525Tds** | D | 2497 | M51D25 | | 10/97 ▸ 04/04 | 64538378438 | **817607** | 458 421 | AL |
| **525d** | D | 2497 | M57D25 | | 01/00 ▸ 04/04 | 64538375513 | **817561** | 588 321 | AL |
| **530d** | D | 2926 | M57D/30-183/30-193 | | 09/98 ▸ 04/04 | 64538375513 | **817561** | 588 321 | AL |

## 5 SERIES E60

| | | | | | | | | | |
|---|---|---|---|---|---|---|---|---|---|
| **520i** | E | 2171 | M54B22 | +Ů/ R134 | 05/03 ▸ | 64509122825 | **817850** | 588 421 | AL |
| **525i** | E | 2494 | M54B25-EU4 | +Ů/ R134 | 09/03 ▸ 02/05 | 64509122825 | **817850** | 588 421 | AL |
| **523i, 525i** | E | 2497 | N52B25UL<br>M54B/25-EU4<br>N52B/25OL | +Ů/ R134 | 09/03 ▸ | 64509122825 | **817850** | 588 421 | AL |
| **530i** | E | 2979 | M54B30-231 | +Ů/ R134 | 05/03 ▸ | 64509122825 | **817850** | 588 421 | AL |
| **530i** | E | 2996 | N52B30B | +Ů/ R134 | 03/05 ▸ | 64509122825 | **817850** | 588 421 | AL |
| **540i** | E | 4000 | N62B40TU | +Ů/ R134 | 09/05 ▸ | 64509122825 | **817850** | 588 421 | AL |
| **545i** | E | 4398 | N62B44VVT | +Ů/ R134 | 05/03 ▸ 09/05 | 64509122825 | **817850** | 588 421 | AL |
| **550i** | E | 4799 | N62B48TU | +Ů/ R134 | 09/05 ▸ | 64509122825 | **817850** | 588 421 | AL |
| **520d** | D | 1995 | M47D20TU2 | +Ů/ R134 | 09/05 ▸ | 64509122827 | **817851** | 608 381 | AL |
| **525d** | D | 2497 | M57D25TU | +Ů/ R134 | 05/03 ▸ | 64509122827 | **817851** | 608 381 | AL |
| **530d, 530xd, 535d** | D | 2993 | M57D/30TU/30TU2 | +Ů/ R134 | 05/03 ▸ | 64509122827 | **817851** | 608 381 | AL |

## 5 SERIES F10 (2010>)

| | | | | | | | | | |
|---|---|---|---|---|---|---|---|---|---|
| **523i** | E | 2497 | N52/N53 | +Ů/ R134 | 03/10 ▸ | 64539219843 | **814113** | | AL |
| **528i** | E | 2793 | N52/N53 | +Ů/ R134 | 03/10 ▸ | 64539219843 | **814113** | | AL |
| **535i** | E | 2993 | N63 | +Ů/ R134 | 03/10 ▸ | 64539219843 | **814113** | | AL |

## 5 SERIES

| | | | | | | | | | |
|---|---|---|---|---|---|---|---|---|---|
| **520i** | E | 2000 | N20 | | 09/11 ▸ | 64537618770 | **814192** | 595 479 | AL |

Condenser Condenseur Kondensator Condensatore Condensor Condensador КОНДЕНСЕР Kondenser Kondenzátor Condensator Συμπυκνωτής



• **New** Nouveau **Nuevo** Novo **Nuovo** Nieuw **Neu** Nowość **Yeni** Новый Νέο **Novy**

| | | CC | | | | OE | Valeo | DIM | TECH |
|---|---|---|---|---|---|---|---|---|---|
| **6 SERIES E63/E64 (2003>2007)** | | | | | | | | | |
| **630i** | E | 2996 | N52B30 | R134 | 09/04 ▸ 08/07 | 64509122825 | **817850** | 588 421 | AL |
| **645Ci** | E | 4398 | N62B44VVT | R134 | 09/03 ▸ 08/07 | 64509122825 | **817850** | 588 421 | AL |
| **650i** | E | 4799 | N62B48TU | R134 | 03/05 ▸ 08/07 | 64509122825 | **817850** | 588 421 | AL |
| **6 SERIES E63/E64 (2007>)** | | | | | | | | | |
| **3.0 i 24V** | E | 2996 | N53B30O0 | R134 | 09/07 ▸ | 64509122825 | **817850** | 588 421 | AL |
| **4.8 i V8 32V** | E | 4799 | N62B48O1 | R134 | 09/07 ▸ | 64509122825 | **817850** | 588 421 | AL |
| **3.0 24V** | D | 2993 | M57D30T2 | R134 | 09/07 ▸ | 64509122825 | **817850** | 588 421 | AL |
| **6 SERIES F12 (2011>)** | | | | | | | | | |
| **3.0 Ti 320 24V** | E | 2979 | N55B30A | R134 | 02/11 ▸ | 64539219843 | **814113** | | AL |
| **4.4 i 32V** | E | 4395 | N63B44A | R134 | 02/11 ▸ | 64539219843 | **814113** | | AL |
| **7 SERIES E38** | | | | | | | | | |
| **728i** | E | 2793 | M52B28 | | 07/95 ▸ 09/97 | 64538373924 | **816922** | 458 421 | AL |
| **728i** | E | 2793 | M52B/28-EU3/28 | | 09/97 ▸ 08/01 | 64538378439 | **817406** | 499 421 | AL |
| **730i** | E | 2997 | M60B30 | | 06/94 ▸ 09/97 | 64538373924 | **816922** | 458 421 | AL |
| **730i** | E | 2997 | M60B30 | | 09/97 ▸ 08/01 | 64538378439 | **817406** | 499 421 | AL |
| **735i** | E | 3498 | M62B35 | | 04/96 ▸ 09/97 | 64538373924 | **816922** | 458 421 | AL |
| **735i** | E | 3498 | M62B35 | | 09/97 ▸ 08/01 | 64538378439 | **817406** | 499 421 | AL |
| **740i** | E | 3982 | M60B40 | | 06/94 ▸ 03/96 | 64538373924 | **816922** | 458 421 | AL |
| **740i** | E | 4398 | M62B44 | | 04/96 ▸ 09/97 | 64538373924 | **816922** | 458 421 | AL |
| **740i** | E | 4398 | M62B44 | | 09/97 ▸ 08/01 | 64538378439 | **817406** | 499 421 | AL |
| **750i** | E | 5379 | M73B54 | | 06/94 ▸ 09/97 | 64538373924 | **816922** | 458 421 | AL |
| **750i** | E | 5379 | M73B54 | | 09/97 ▸ 08/01 | 64538378439 | **817406** | 499 421 | AL |
| **725Tds** | D | 2497 | M51D25 | | 04/96 ▸ 09/97 | 64538373924 | **816922** | 458 421 | AL |
| **725Tds** | D | 2497 | M51D25 | | 09/97 ▸ 08/01 | 64538378439 | **817406** | 499 421 | AL |
| **730d** | D | 2926 | M57D30-183 | | 09/98 ▸ 08/01 | 64538375513 | **817561** | 588 321 | AL |
| **740d** | D | 3901 | M67D40 | | 03/99 ▸ 08/01 | 64538375513 | **817561** | 588 321 | AL |
| **7 SERIES E65/E66** | | | | | | | | | |
| **730i, 730Li** | E | 2979 | M54B30 | R134 | 09/03 ▸ 02/05 | 64509122825 | **817850** | 588 421 | AL |
| **735i, 735Li** | E | 3600 | N62B36VVT | R134 | 09/01 ▸ 02/05 | 64509122825 | **817850** | 588 421 | AL |
| **740i, 740Li** | E | 4000 | N62B40TU | R134 | 03/05 ▸ | 64509122825 | **817850** | 588 421 | AL |
| **745i, 745Li** | E | 4398 | N62B44VVT | R134 | 09/01 ▸ 02/05 | 64509122825 | **817850** | 588 421 | AL |
| **750i, 750Li** | E | 4799 | N62B48TU | R134 | 03/05 ▸ | 64509122825 | **817850** | 588 421 | AL |
| **760i, 760Li** | E | 5972 | N73B60A | R134 | 02/03 ▸ 02/05 | 64509122825 | **817850** | 588 421 | AL |
| **730d, 730Ld** | D | 2993 | M57D30TU | R134 | 09/02 ▸ | 64509122827 | **817851** | 608 381 | AL |
| **740d** | D | 3901 | M67D40 | R134 | 09/02 ▸ 02/05 | 64509122827 | **817851** | 608 381 | AL |
| **745d** | D | 4423 | M67D44 | R134 | 03/05 ▸ | 64509122827 | **817851** | 608 381 | AL |
| **7 SERIES F02** | | | | | | | | | |
| **740Li** | E | 4000 | N52 | R134 | 11/08 ▸ | 64539219843 | **814113** | | AL |
| **7 SERIES** | | | | | | | | | |
| **720i** | E | 2000 | N20 | | 09/11 ▸ | 64537618770 | **814192** | 595 479 | AL |
| **8 SERIES E31** | | | | | | | | | |
| **840** | E | 3982 | M60B40 | | 12/92 ▸ 07/96 | 64531392941 | **816981** | 572 447 | AL |
| **840** | E | 4398 | M62B44 | | 03/96 ▸ 01/00 | 64531392941 | **816981** | 572 447 | AL |
| **850** | E | 4988 | M70B50 | | 09/89 ▸ 08/94 | 64531392941 | **816981** | 572 447 | AL |
| **850** | E | 5379 | M73B54 | | 09/94 ▸ 01/00 | 64531392941 | **816981** | 572 447 | AL |
| **850** | E | 5576 | S70B56 | | 09/92 ▸ 07/96 | 64531392941 | **816981** | 572 447 | AL |
| **M3 E46** | | | | | | | | | |
| **3.2 i** | E | 3246 | S54B32 | | 07/00 ▸ | 64538377614 | **817383** | 565 421 | AL |
| **M3 (E90)** | | | | | | | | | |
| **4.0 i V8 32V** | E | 3999 | S65B40A | | 09/08 ▸ 04/10 | 64539206297 | **814011** | 628 401 | AL |
| **M5 E39** | | | | | | | | | |
| **5.0 i** | E | 4941 | S62B50 | | 07/99 ▸ | 64538378438 | **817607** | 458 421 | AL |
| **M6** | | | | | | | | | |
| **5.0 i 40V** | E | 4999 | S85B50 | R134 | 03/05 ▸ | 64509122825 | **817850** | 588 421 | AL |

| | | CC | | | | OE | Valeo | DIM | TECH |
|---|---|---|---|---|---|---|---|---|---|
| **BMW** (.../...) | | | | | | | | | |
| **X1 (2009>)** | | | | | | | | | |
| **2.0 i 16V** | E | 1995 | N46B20B | | 04/10 ▸ | 64539206297 | **814011** | 628 401 | AL |
| **3.0 i 24V** | E | 2996 | N52B30A | | 04/10 ▸ | 64539206297 | **814011** | 628 401 | AL |
| **2.0 d 16V** | D | 1995 | N47D/20C/20D/20A | | 10/09 ▸ 04/10 | 64539229021 | **814012** | 628 341 | AL |
| **X3 (2003>)** | | | | | | | | | |
| **2.0 i 16V** | E | 1995 | N46B20O1 | | 09/05 ▸ | 17113400400 | **817383** | 565 421 | AL |
| **2.5 i 24V** | E | 2494 | M54B25-6S5 | | 03/04 ▸ | 17113400400 | **817383** | 565 421 | AL |
| **3.0 i 24V** | E | 2979 | M54B30-231 | | 10/03 ▸ | 17113400400 | **817383** | 565 421 | AL |
| **2.0 d** | D | 1995 | M47D20TU | | 09/04 ▸ | 64538377648 | **817405** | 518 311 | AL |
| **3.0 d** | D | 2993 | M57D30-204 | | 10/03 ▸ 09/05 | 64538377648 | **817405** | 518 311 | AL |
| **X3 E83 LCI (2006>)** | | | | | | | | | |
| **2.0 i** | E | 1995 | N46B20B | | 08/06 ▸ | 17113400400 | **817383** | 565 421 | AL |
| **2.5 si 24V** | E | 2497 | N52B25A | | 08/06 ▸ | 17113400400 | **817383** | 565 421 | AL |
| **3.0 si** | E | 2996 | N52B30A | | 08/06 ▸ | 17113400400 | **817383** | 565 421 | AL |
| **X5** | | | | | | | | | |
| **3.0 i** | E | 2979 | M54B30-231 | R134 | 01/00 ▸ | 64536914216 | **817575** | 498 391 | AL |
| **4.4 i** | E | 4398 | M62B44, N62B44 | R134 | 01/00 ▸ | 64536914216 | **817575** | 498 391 | AL |
| **4.6 is** | E | 4619 | M62B46 | R134 | 09/01 ▸ | 64536914216 | **817575** | 498 391 | AL |
| **4.8 is** | E | 4799 | N62B48A | R134 | 03/04 ▸ | 64536914216 | **817575** | 498 391 | AL |
| **3.0 d** | D | 2926 | M54D30 | R134 | 03/01 ▸ 08/03 | 64536914216 | **817575** | 498 391 | AL |
| **3.0 d** | D | 2993 | M57D30TU | R134 | 08/03 ▸ | 64536914216 | **817575** | 498 391 | AL |
| **Z4 (2002>2009)** | | | | | | | | | |
| **2.0 i 16V** | E | 1995 | N46B20O1 | | 03/05 ▸ 08/08 | 64536914033 | **814287** | 525 408 | AL |
| **2.2 i 24V** | E | 2171 | M54B22 | | 03/04 ▸ 01/06 | 64536914033 | **814287** | 525 408 | AL |
| **2.5 i 24V** | E | 2494 | M54B25-6S5 | | 09/02 ▸ 01/06 | 64536914033 | **814287** | 525 408 | AL |
| **2.5 i 24V,2.5 si 24V** | E | 2497 | N52B/25A/25B | | 02/06 ▸ 03/09 | 64536914033 | **814287** | 525 408 | AL |
| **3.0 i 24V** | E | 2979 | M54B30 | | 09/02 ▸ 01/06 | 64536914033 | **814287** | 525 408 | AL |
| **3.0 si 24V** | E | 2996 | N52B30A | | 02/06 ▸ 03/09 | 64536914033 | **814287** | 525 408 | AL |
| **3.2 i 24V** | E | 3246 | S54B32 | | 02/06 ▸ 03/09 | 64536914033 | **814287** | 525 408 | AL |
| **Z4 (2009>)** | | | | | | | | | |
| **3.0 i 24V** | E | 2979 | N54B30A | | 03/09 ▸ | 64539229021 | **814012** | 628 341 | AL |
| **Z8** | | | | | | | | | |
| **5.0 i V8** | E | 4941 | S62B50 | | 03/00 ▸ | 64538378438 | **817607** | 458 421 | AL |
| **CHRYSLER** | | | | | | | | | |
| **300M** | | | | | | | | | |
| **2.7 i V6 24V** | E | 2736 | EER, EES | | 01/98 ▸ 04/03 | 4758305 | **817075** | 692 358 | AL |
| **3.5 i V6 24V** | E | 3518 | EGC, EGG | | 01/98 ▸ 04/03 | 4758305 | **817075** | 692 358 | AL |
| **GRAND VOYAGER (91>96)** | | | | | | | | | |
| **3.3 i** | E | 3301 | EGA | R12>R134a | 04/92 ▸ 10/95 | 4644365 | **817015** | 676 352 | AL |
| **GRAND VOYAGER (2001>2004)** | | | | | | | | | |
| **2.4 i 16V** | E | 2429 | EDZ | N | 03/01 ▸ 07/04 | 4809267AC | **817477** | 747 438 | AL |
| **3.3 i V6** | E | 3301 | EGA | N | 03/01 ▸ | 4809227AD | **817477** | 747 438 | AL |
| **3.3 i V6** | E | 3301 | EGA | Rear Condenser | 03/01 ▸ | 4682591 | **817074** | 685 128 | AL |
| **2.5 CRD** | D | 2500 | ENC | | 03/01 ▸ | 5072262AA | **817582** | 744 437 | AL |
| **GRAND VOYAGER (2004>)** | | | | | | | | | |
| **2.8 CRD** | D | 2776 | ENR | | 07/04 ▸ | 5142490AA | **817739** | 744 437 | AL |
| **PT CRUISER** | | | | | | | | | |
| **2.0 i 16V** | E | 1996 | ECC | N | 09/00 ▸ | 5017405 | **817445** | 544 348 | AL |
| **2.4 i 16V** | E | 2429 | EDZ | N | 06/00 ▸ | 5017405 | **817445** | 544 348 | AL |
| **SEBRING** | | | | | | | | | |
| **2.0 i 16V** | E | 1996 | ECC | | 03/00 ▸ | 5017621 | **817475** | 674 392 | AL |
| **2.7 i V6 24V** | E | 2736 | EES | | 03/00 ▸ | 5017621 | **817475** | 674 392 | AL |

Condenser Condenseur Kondensator Condensatore Condensor Condensador КОНДЕНСЕР Kondenser Kondenzátor Condensator Συμπυκνωτής



• **New** Nouveau **Nuevo** Novo **Nuovo** Nieuw **Neu** Nowość **Yeni** Новый Νέο **Novy**

| | | CC | | | | OE | Valeo | DIM | TECH |
|---|---|---|---|---|---|---|---|---|---|
| **CHRYSLER (.../...)** | | | | | | | | | |
| **STRATUS** | | | | | | | | | |
| **2.0 i** | E | 1996 | ECB | | 07/96 ▸ | 5011395AA | **816991** | 660 380 | AL |
| **2.4 i** | E | 2429 | EDZ | | 07/96 ▸ | 5011395AA | **816991** | 660 380 | AL |
| **2.5 i V6** | E | 2497 | EEB | | 07/96 ▸ | 5011395AA | **816991** | 660 380 | AL |
| **VOYAGER (83>95)** | | | | | | | | | |
| **2.5 i, 2.5 24V** | E | 2501 | EDM | R12>R134a | 10/83 ▸ 02/91 | 4644365 | **817015** | 676 352 | AL |
| **3.0** | E | 2972 | EFA | R12>R134a | 01/89 ▸ 02/91 | 4644365 | **817015** | 676 352 | AL |
| **3.3 i** | E | 3301 | EGA | R12>R134a | 04/92 ▸ 10/95 | 4644365 | **817015** | 676 352 | AL |
| **VOYAGER (96>2001)** | | | | | | | | | |
| **2.0 i** | E | 1996 | ECB | | 10/96 ▸ 03/01 | 4662589 | **817073** | 686 457 | AL |
| **3.3 i** | E | 3301 | EGA | | 10/96 ▸ 03/01 | 4662589 | **817073** | 686 457 | AL |
| **3.8 i** | E | 3778 | EGH | | 10/96 ▸ 03/01 | 4662589 | **817073** | 686 457 | AL |
| **2.5 TD** | D | 2500 | ENC | | 01/96 ▸ 03/01 | 4798015 | **816945** | 690 388 | AL |
| **VOYAGER (2001>2004)** | | | | | | | | | |
| **2.4 i 16V** | E | 2429 | EDZ | N | 03/01 ▸ 04/04 | 4809267AC | **817477** | 747 438 | AL |
| **3.3 i V6** | E | 3301 | EGA | Rear Condenser | 03/01 ▸ | 4682591 | **817074** | 685 128 | AL |
| **3.3 i V6** | E | 3301 | EGA | N | 03/01 ▸ 04/04 | 4809227AD | **817477** | 747 438 | AL |
| **2.5 CRD** | D | 2500 | ENC | | 03/01 ▸ | 5072262AA | **817582** | 744 437 | AL |
| **VOYAGER (2004>)** | | | | | | | | | |
| **2.8 CRD** | D | 2776 | ENR | | 07/04 ▸ | 5142490AA | **817739** | 744 437 | AL |
| **VOYAGER (96>2001)** | | | | | | | | | |
| **2.0 i 16V** | E | 1996 | ECB | N | 10/96 ▸ 03/01 | 4809267AC | **817477** | 747 438 | AL |
| **2.0 i 16V** | E | 1996 | ECB | | 01/97 ▸ 12/99 | 4809129AA | **814290** | 710 388 | AL |
| **2.4 i 16V** | E | 2459 | EDZ | | 01/97 ▸ 12/99 | 4809129AA | **814290** | 710 388 | AL |
| **2.4 i 16V** | E | 2459 | EDZ | N | 01/96 ▸ 03/01 | 4809267AC | **817477** | 747 438 | AL |
| **3.3 i V6** | E | 3301 | EGA | | 01/96 ▸ 12/99 | 4809129AA | **814290** | 710 388 | AL |
| **3.8 i V6** | E | 3778 | EGH,EGH-164 | | 10/96 ▸ 03/01 | 4809129AA | **814290** | 710 388 | AL |
| **CITROEN** | | | | | | | | | |
| **C1** | | | | | | | | | |
| **1.0 i 12V** | E | 998 | 384F(CFA) | R134 | 06/05 ▸ | 6455EF | **818013** | 359 351 | AL |
| **1.4 HDi** | D | 1398 | DV4TD | R134 | 06/05 ▸ | 6455EE | **818014** | 359 351 | AL |
| **C2** | | | | | | | | | |
| **1.1 i** | E | 1124 | TU1JP | R134 | 09/03 ▸ | 6455ET | **814095** | 464 371 | AL |
| **1.4 i** | E | 1360 | TU3JP | R134 | 09/03 ▸ | 6455ET | **814095** | 464 371 | AL |
| **1.6 i 16V** | E | 1587 | TU5JP4, TU5JP4S | R134 | 09/03 ▸ | 6455ET | **814095** | 464 371 | AL |
| **1.4 HDi** | D | 1398 | DV4TD | R134 | 09/03 ▸ | 6455ET | **814095** | 464 371 | AL |
| **C3 (2002>2005)** | | | | | | | | | |
| **1.1 i** | E | 1124 | TU1JP | R134 | 04/02 ▸ 10/05 | 6455ET | **814095** | 464 371 | AL |
| **1.4 i, 1.4 i 16V** | E | 1360 | ET3J4, TU3JP | R134 | 04/02 ▸ 10/05 | 6455ET | **814095** | 464 371 | AL |
| **1.6 i 16V** | E | 1587 | TU5JP4 | R134 | 04/02 ▸ | 6455ET | **814095** | 464 371 | AL |
| **1.4 HDi 16V** | D | 1398 | DV4TED4 | R134 | 04/02 ▸ 10/05 | 6455ET | **814095** | 464 371 | AL |
| **1.4 HDi** ▸ 10163 | D | 1399 | DV4TD | R134 | 04/02 ▸ 10/05 | 6455ET | **814095** | 464 371 | AL |
| **1.6 HDi 16V** | D | 1560 | DV6ATED4 | R134 | 06/05 ▸ 10/05 | 6455EK | **818015** | 524 368 | AL |
| **C3 (2005>)** | | | | | | | | | |
| **1.1 i** | E | 1124 | TU1A | R134 | 11/05 ▸ | 6455ET | **814095** | 464 371 | AL |
| **1.4 i, 1.4 i 16V** | E | 1360 | TU3JP, ET3J4, TU3A | R134 | 11/05 ▸ | 6455ET | **814095** | 464 371 | AL |
| **1.6 i 16V** | E | 1587 | TU5JP4 | R134 | 12/06 ▸ 08/08 | 6455EK | **818015** | 524 368 | AL |
| **1.4 HDi** | D | 1398 | DV4TD | R134 | 11/05 ▸ | 6455ET | **814095** | 464 371 | AL |
| **1.6 HDi 16V** | D | 1560 | DV6ATED4, DV6TED4 | R134 | 11/05 ▸ | 6455EK | **818015** | 524 368 | AL |
| **C3 (2009>)** | | | | | | | | | |
| **1.6 i 16V** | E | 1587 | TU5JP4 | R134 | 10/09 ▸ | 6455EK | **818015** | 524 368 | AL |
| **1.6 HDi 16V** | D | 1560 | DV6ATED4, DV6TED4 | R134 | 10/09 ▸ | 6455EK | **818015** | 524 368 | AL |
| **C3 PLURIEL** | | | | | | | | | |
| **1.4 i** ▸ 10163 | E | 1360 | TU3JP | R134 | 05/03 ▸ | 6455ET | **814095** | 464 371 | AL |

# CITROEN (.../...)

## C3 PLURIEL (.../...)

| | | CC | | | | OE | Valeo | DIM | TECH |
|---|---|---|---|---|---|---|---|---|---|
| **1.6 i 16V** | E | 1587 | TU5JP4 | R134 | 05/03 ▸ | 6455ET | **814095** | 464 371 | AL |
| **1.4 HDi** ▸10163 | D | 1399 | DV4TD | R134 | 02/04 ▸ | 6455ET | **814095** | 464 371 | AL |

## C4

| | | | | | | | | | |
|---|---|---|---|---|---|---|---|---|---|
| **1.4 i 16V** | E | 1360 | ET3J4 | R134 | 11/04 ▸ | 6455GK | **818170** | 568 361 | AL |
| **1.6 i 16V** | E | 1587 | TU5JP4 | R134 | 11/04 ▸ | 6455GK | **818170** | 568 361 | AL |
| **2.0 i 16V** | E | 1997 | EW10A, EW10J4S | R134 | 11/04 ▸ | 6455CX | **818171** | 568 361 | AL |
| **2.0 i 16V** | E | 1997 | EW10J4 | R134 | 11/04 ▸ | 6455GK | **818170** | 568 361 | AL |
| **1.6 HDi 16V** | D | 1560 | DV6ATED4, DV6TED4 | R134 | 11/04 ▸ | 6455CX | **818171** | 568 361 | AL |
| **2.0 HDi 16V** | D | 1997 | DW10BTED4 | R134 | 11/04 ▸ | 6455CX | **818171** | 568 361 | AL |

## C4 PICASSO (2006>)

| | | | | | | | | | |
|---|---|---|---|---|---|---|---|---|---|
| **1.8 i 16V** ▸11381 | E | 1749 | EW7A | R134 | 09/06 ▸ 01/08 | 6455EW | **818170** | 535 361 | AL |
| **1.8 i 16V** 11381 ▸ | E | 1749 | EW7A | R134 | 02/08 ▸ | 6455GH | **818171** | 568 361 | AL |
| **2.0 i 16V** ▸11381 | E | 1997 | EW10A | R134 | 09/06 ▸ 01/08 | 6455EW | **818170** | 535 361 | AL |
| **2.0 i 16V** 11381 ▸ | E | 1997 | EW10A | R134 | 02/08 ▸ | 6455GH | **818171** | 568 361 | AL |
| **1.6 HDi 16V** ▸11381 | D | 1560 | DV6TED4 | R134 | 09/06 ▸ 01/08 | 6455EW | **818170** | 535 361 | AL |
| **1.6 HDi 16V** 11381 ▸ | D | 1560 | DV6TED4 | R134 | 02/08 ▸ | 6455GH | **818171** | 568 361 | AL |
| **2.0 HDi 16V** ▸11381 | D | 1997 | DW10BTED4 | R134 | 09/06 ▸ 01/08 | 6455EW | **818170** | 535 361 | AL |
| **2.0 HDi 16V** 11381 ▸ | D | 1997 | DW10BTED4 | R134 | 02/08 ▸ | 6455GH | **818171** | 568 361 | AL |

## C5 (2001>2004)

| | | | | | | | | | |
|---|---|---|---|---|---|---|---|---|---|
| **1.8 i 16V** | E | 1749 | EW7J4 | R134 | 02/01 ▸ 08/04 | 6453FH | **817464** | 516 360 | AL |
| **2.0 HPi 16V, 2.0 i 16V** | E | 1997 | EW10D, EW10J4 | R134 | 02/01 ▸ 08/04 | 6453FH | **817464** | 516 360 | AL |
| **3.0 i V6 24V** | E | 2946 | ES9J4S | R134 | 02/01 ▸ 08/04 | 6453FP | **817465** | 518 367 | AL |
| **2.0 HDi** | D | 1997 | DW10ATED, DW10TD | R134 | 02/01 ▸ 08/04 | 6453FH | **817464** | 516 360 | AL |
| **2.2 HDi 16V** | D | 2179 | DW12TED4 | R134 | 02/01 ▸ 08/04 | 6453FH | **817464** | 516 360 | AL |

## C5 (2004>)

| | | | | | | | | | |
|---|---|---|---|---|---|---|---|---|---|
| **1.8 i 16V** | E | 1749 | EW7J4 | R134 | 09/04 ▸ | 6455FX | **817824** | 560 361 | AL |
| **2.0 i 16V** | E | 1997 | EW10A | R134 | 09/04 ▸ | 6455FX | **817824** | 560 361 | AL |
| **2.2 i 16V** | E | 2230 | EW12J4 | R134 | 09/04 ▸ | 6455FX | **817824** | 560 361 | AL |
| **3.0 i V6 24V** | E | 2946 | ES9A | R134 | 09/04 ▸ | 6455FX | **817824** | 560 361 | AL |
| **1.6 HDi 16V** | D | 1560 | DV6TED4 | R134 | 09/04 ▸ | 6455FX | **817824** | 560 361 | AL |
| **2.0 HDi 16V** | D | 1997 | DW10BTED4 | R134 | 09/04 ▸ | 6455FX | **817824** | 560 361 | AL |
| **2.2 HDi 16V** | D | 2179 | DW12TED4 | R134 | 09/04 ▸ | 6455FX | **817824** | 560 361 | AL |
| **2.2 HDi 16V** | D | 2179 | DW12BTED4 | R134 | 02/06 ▸ | 6455EY | **817740** | 669 303 | AL |

## C5 (2008>)

| | | | | | | | | | |
|---|---|---|---|---|---|---|---|---|---|
| **1.8 i 16V** | E | 1749 | EW7A | R134 | 03/08 ▸ | 6455GY | **814090** | 539 361 | AL |
| **2.0 i 16V** | E | 1997 | EW10A | R134 | 03/08 ▸ | 6455GY | **814090** | 539 361 | AL |
| **1.6 HDi** | D | 1560 | DV6TED4 | R134 | 03/08 ▸ | 6455GY | **814090** | 539 361 | AL |
| **2.0 HDi** | D | 1997 | DW10BTED4 | R134 | 03/08 ▸ | 6455GY | **814090** | 539 361 | AL |
| **2.2 HDi** | D | 2179 | DW12BTED4 | | 03/08 ▸ | 6455GZ | **814173** | | AL |
| **2.7 HDi V6** | D | 2720 | DT17BTED4 | | 03/08 ▸ | 6455GZ | **814173** | | AL |
| **3.0 i V6** | E | 2946 | ES9A | R134 | 03/08 ▸ | 6455GY | **814090** | 539 361 | AL |

## C6

| | | | | | | | | | |
|---|---|---|---|---|---|---|---|---|---|
| **3.0 i V6 24V** | E | 2946 | ES9A | R134 | 12/05 ▸ | 6455FX | **817824** | 560 361 | AL |
| **2.2 HDi 16V** | D | 2179 | DW12BTED4 | R134 | 10/06 ▸ | 6455EY | **817740** | 669 303 | AL |
| **2.7 HDi V6 24V** | D | 2720 | DT17TED4 | R134 | 12/05 ▸ | 6455EY | **817740** | 669 303 | AL |

## C8

| | | | | | | | | | |
|---|---|---|---|---|---|---|---|---|---|
| **2.0 i 16V** | E | 1997 | EW10J4 | R134 | 06/02 ▸ | 6455AP | **817579** | 560 450 | AL |
| **2.2 i 16V** | E | 2230 | EW12J4 | R134 | 06/02 ▸ | 6455AP | **817579** | 560 450 | AL |
| **3.0 i V6 24V** | E | 2946 | ES9J4S | R134 | 06/02 ▸ | 6455AQ | **817668** | 712 364 | AL |
| **2.0 HDi 16V** | D | 1997 | DW10ATED4 | R134 | 06/02 ▸ | 6455AP | **817579** | 560 450 | AL |
| **2.2 HDi 16V** | D | 2179 | DW12TED4 | R134 | 06/02 ▸ | 6455AP | **817579** | 560 450 | AL |

Condenser Condenseur Kondensator Condensatore Condensor Condensador КОНДЕНСЕР Kondenser Kondenzátor Condensator Συμπυκνωτής



• **New** Nouveau **Nuevo** Novo **Nuovo** Nieuw **Neu** Nowość **Yeni** Новый Νέο **Novy**

| | | CC | | | | OE | Valeo | DIM | TECH |
|---|---|---|---|---|---|---|---|---|---|
| **CITROEN (.../...)** | | | | | | | | | |
| **C8 (.../...)** | | | | | | | | | |
| **2.2 HDi 16V** | D | 2179 | DW12BTED4 | | 12/07 ▸ | 6455FW | **814065** | 678 355 | AL |
| **C CROSSER** | | | | | | | | | |
| **2.2 HDi 16V** | D | 2179 | DW12MTED4 | R134 | 07/07 ▸ | 6455FA | **814315** | 616 407 | AL |
| **DS3** | | | | | | | | | |
| **1.4 VTi 16V** | E | 1397 | EP3C | R134 | 03/10 ▸ | 6455HA | **814095** | 464 371 | AL |
| **1.6 VTi 16V** | E | 1598 | EP6C | R134 | 03/10 ▸ | 6455HA | **814095** | 464 371 | AL |
| **DS4** | | | | | | | | | |
| **1.6 VTi 16V** | E | 1598 | EP6C,EP6CDT,EP6CDTX | R134 | 04/11 ▸ | 6455GH | **818171** | 568 361 | AL |
| **1.6 Hdi** | D | 1560 | DV6C | R134 | 04/11 ▸ | 6455GH | **818171** | 568 361 | AL |
| **EVASION (94>98)** | | | | | | | | | |
| **1.8 i** | E | 1761 | XU7JP | | 07/96 ▸ 09/98 | 6455Y3 | **816852** | 690 462 | AL |
| **2.0 i, 2.0 i Turbo CT** | E | 1998 | XU10J2C, XU10J2CTEL3 | | 07/94 ▸ 09/98 | 6455Y3 | **816852** | 690 462 | AL |
| **1.9 TD** | D | 1905 | XUD9BTF, XUD9TEF<br>XUD9TF | | 10/94 ▸ 09/98 | 6455Y3 | **816852** | 690 462 | AL |
| **2.1 TD** | D | 2088 | XUD11BTE | | 04/96 ▸ 09/98 | 6455Y3 | **816852** | 690 462 | AL |
| **EVASION (98>2002)** | | | | | | | | | |
| **1.8 i** | E | 1761 | XU7JP | | 10/98 ▸ 05/02 | 6455Y3 | **816852** | 690 462 | AL |
| **2.0 i 16V** | E | 1997 | EW10J4 | | 07/00 ▸ 05/02 | 6455Y3 | **816852** | 690 462 | AL |
| **2.0 i, 2.0 i 16V, 2.0 i Turbo CT** | E | 1998 | XU10J2C, XU10J2CTEL3<br>XU10J4R | | 10/98 ▸ 05/02 | 6455Y3 | **816852** | 690 462 | AL |
| **1.9 TD** | D | 1905 | XUD9BTF | | 10/98 ▸ 05/02 | 6455Y3 | **816852** | 690 462 | AL |
| **2.0 HDi, 2.0 HDi 16V** | D | 1997 | DW10ATED, DW10ATED4 | | 08/99 ▸ 05/02 | 6455Y3 | **816852** | 690 462 | AL |
| **2.1 TD** | D | 2088 | XUD11BTE | | 10/98 ▸ 05/02 | 6455Y3 | **816852** | 690 462 | AL |
| **SAXO (96>99)** | | | | | | | | | |
| **1.1 i, 1.1 i GPL** | E | 1124 | TU1M+ | | 03/96 ▸ 08/99 | 6455V0 | **816964** | 542 312 | AL |
| **1.4 i** | E | 1360 | TU3JP | | 03/96 ▸ 08/99 | 6455V0 | **816964** | 542 312 | AL |
| **1.6 i, 1.6 i 16V** | E | 1587 | TU5J4, TU5JP | | 03/96 ▸ 08/99 | 6455V0 | **816964** | 542 312 | AL |
| **1.5 D** | D | 1527 | TUD5, TUD5B | | 05/96 ▸ 08/99 | 6455V0 | **816964** | 542 312 | AL |
| **SAXO (99>)** | | | | | | | | | |
| **1.1 i, 1.1 i GPL** ▸ 8575 | E | 1124 | TU1M+ | | 09/99 ▸ 05/00 | 6455Z1 | **817655** | 588 321 | AL |
| **1.4 i** ▸ 8575 | E | 1360 | TU3JP | | 09/99 ▸ 05/00 | 6455Z1 | **817655** | 588 321 | AL |
| **1.6 i, 1.6 i 16V** ▸ 8575 | E | 1587 | TU5J4, TU5JP | | 09/99 ▸ 05/00 | 6455Z1 | **817655** | 588 321 | AL |
| **1.5 D** ▸ 8575 | D | 1527 | TUD5, TUD5B | | 09/99 ▸ 05/00 | 6455Z1 | **817655** | 588 321 | AL |
| **SYNERGIE (95>98)** | | | | | | | | | |
| **1.8 i** | E | 1761 | XU7JP | | 07/96 ▸ 09/98 | 6455Y3 | **816852** | 690 462 | AL |
| **2.0 i** | E | 1998 | XU10J2C | | 10/95 ▸ 09/98 | 6455Y3 | **816852** | 690 462 | AL |
| **1.9 TD** | D | 1905 | XUD9BTF, XUD9TEF | | 10/95 ▸ 09/98 | 6455Y3 | **816852** | 690 462 | AL |
| **SYNERGIE (98>2002)** | | | | | | | | | |
| **2.0 i 16V** | E | 1997 | EW10J4 | | 07/00 ▸ 05/02 | 6455Y3 | **816852** | 690 462 | AL |
| **2.0 i** | E | 1998 | XU10J2C | | 10/98 ▸ 05/02 | 6455Y3 | **816852** | 690 462 | AL |
| **1.9 TD** | D | 1905 | XUD9BTF | | 10/98 ▸ 05/02 | 6455Y3 | **816852** | 690 462 | AL |
| **2.0 HDi** | D | 1997 | DW10ATED | | 08/99 ▸ 05/02 | 6455Y3 | **816852** | 690 462 | AL |
| **XANTIA (93>97)** | | | | | | | | | |
| **1.6 i** 6594 ▸ | E | 1580 | XU5JP | | 01/95 ▸ 12/97 | 6453V5 | **816803** | 532 348 | AL |
| **1.8 i, 1.8 i 16V** | E | 1761 | XU7JB, XU7JP, XU7JP4 | | 07/95 ▸ 12/97 | 6453V5 | **816803** | 532 348 | AL |
| **2.0 i, 2.0 i 16V, 2.0 i Turbo CT** 6594 ▸ | E | 1998 | XU10J2C, XU10J2CTEL3<br>XU10J4, XU10J4R | | 01/95 ▸ 12/97 | 6453V5 | **816803** | 532 348 | AL |
| **3.0 i V6 24V** | E | 2946 | ES9J4 | | 11/96 ▸ 12/97 | 6453V5 | **816803** | 532 348 | AL |
| **1.9 D, 1.9 SD, 1.9 TD** 6594 ▸ | D | 1905 | XUD9A, XUD9BTF<br>XUD9SD, XUD9TEF | | 07/95 ▸ 12/97 | 6453V5 | **816803** | 532 348 | AL |
| **2.1 TD** | D | 2088 | XUD11BTE | | 07/95 ▸ 12/97 | 6453V5 | **816803** | 532 348 | AL |

# CITROEN (.../...)

| | | CC | | | | OE | Valeo | DIM | TECH |
|---|---|---|---|---|---|---|---|---|---|
| **XANTIA (97>2002)** | | | | | | | | | |
| **1.6 i** | E | 1580 | XU5JP | | 12/97 ▸ 05/02 | 6453V5 | **816803** | 532 348 | AL |
| **1.8 i, 1.8 i 16V, 1.8 i GPL 16V** | E | 1761 | XU7JB, XU7JP, XU7JP4 | | 12/97 ▸ 05/02 | 6453V5 | **816803** | 532 348 | AL |
| **2.0 i, 2.0 i 16V, 2.0 i Turbo CT** | E | 1998 | XU10J2C, XU10J2CTEL3 XU10J4R | | 12/97 ▸ 05/02 | 6453V5 | **816803** | 532 348 | AL |
| **3.0 i V6 24V** | E | 2946 | ES9J4 | | 12/97 ▸ 05/02 | 6453V5 | **816803** | 532 348 | AL |
| **1.9 SD, 1.9 TD** | D | 1905 | XUD9BTF, XUD9SD | | 12/97 ▸ 05/02 | 6453V5 | **816803** | 532 348 | AL |
| **2.0 HDi** | D | 1997 | DW10ATED, DW10TD | | 10/98 ▸ 05/02 | 6453V5 | **816803** | 532 348 | AL |
| **2.1 TD** | D | 2088 | XUD11BTE | | 12/97 ▸ 05/02 | 6453V5 | **816803** | 532 348 | AL |
| **XM (89>94)** | | | | | | | | | |
| **2.0, 2.0 i, 2.0 i Turbo CT** | E | 1998 | XU102C, XU10J2 XU10J2TE, XU10M | | 09/93 ▸ 06/94 | 6455Y6 | **816850** | 552 352 | AL |
| **3.0 i V6, 3.0 i V6 24V** | E | 2963 | ZPJ, ZPJ4 | | 09/93 ▸ 06/94 | 6455Y6 | **816850** | 552 352 | AL |
| **3.0 i V6** | E | 2975 | ZPJ | | 09/93 ▸ 06/94 | 6455Y6 | **816850** | 552 352 | AL |
| **2.1 TD Turbo D12 12V** | D | 2088 | XUD11ATE | | 09/93 ▸ 06/94 | 6455Y6 | **816850** | 552 352 | AL |
| **2.1 D12** | D | 2138 | XUD11A | | 09/93 ▸ 06/94 | 6455Y6 | **816850** | 552 352 | AL |
| **XM (94>2001)** | | | | | | | | | |
| **2.0 i 16V, 2.0 i Turbo CT** | E | 1998 | XU10J2TE, XU10J4R | | 07/94 ▸ 07/01 | 6455Y6 | **816850** | 552 352 | AL |
| **3.0 i V6 24V** | E | 2946 | ES9J4 | | 07/97 ▸ 07/01 | 6455Y6 | **816850** | 552 352 | AL |
| **3.0 i V6, 3.0 i V6 24V** | E | 2963 | ZPJ, ZPJ4 | | 07/94 ▸ 05/99 | 6455Y6 | **816850** | 552 352 | AL |
| **2.1 TD Turbo D12 12V** | D | 2088 | XUD11ATE, XUD11BTE | | 07/94 ▸ 07/01 | 6455Y6 | **816850** | 552 352 | AL |
| **2.1 D12** | D | 2138 | XUD11A | | 07/94 ▸ 06/96 | 6455Y6 | **816850** | 552 352 | AL |
| **2.5 TD Turbo D** | D | 2446 | DK5ATE | | 07/94 ▸ 07/01 | 6455Y6 | **816850** | 552 352 | AL |
| **XSARA (97>2000)** | | | | | | | | | |
| **1.4 i, 1.4 i GPL** | E | 1360 | TU3JP | | 07/97 ▸ 08/00 | 6455AV | **817230** | 568 341 | AL |
| **1.6 i** | E | 1587 | TU5JP | | 07/97 ▸ 08/00 | 6455AV | **817230** | 568 341 | AL |
| **1.8 i, 1.8 i 16V, 1.8 i GPL 16V** | E | 1761 | XU7JB, XU7JP, XU7JP4 | | 07/97 ▸ 08/00 | 6455AV | **817230** | 568 341 | AL |
| **2.0 i 16V** | E | 1998 | XU10J4R, XU10J4RS | | 01/98 ▸ 08/00 | 6455AV | **817230** | 568 341 | AL |
| **1.5 D** | D | 1527 | TUD5 | | 03/98 ▸ 08/00 | 6455AW | **817229** | 628 341 | AL |
| **1.8 D** | D | 1769 | XUD7 | | 03/98 ▸ 08/00 | 6455Y2 | **817042** | 630 339 | AL |
| **1.9 D** | D | 1868 | DW8 | | 09/98 ▸ 08/00 | 6455Y2 | **817042** | 630 339 | AL |
| **1.9 D, 1.9 SD, 1.9 TD** | D | 1905 | XUD9A, XUD9BSD XUD9SD, XUD9TE | | 07/97 ▸ 08/00 | 6455Y2 | **817042** | 630 339 | AL |
| **2.0 HDi** | D | 1997 | DW10TD | | 03/99 ▸ 08/00 | 6455Y2 | **817042** | 630 339 | AL |
| **XSARA (2000>)** | | | | | | | | | |
| **1.4 i** | E | 1360 | TU3JP | +/ R134 | 09/00 ▸ | 6455CV | **817508** | 518 364 | AL |
| **1.6 i 16V** | E | 1587 | TU5JP4 | +/ R134 | 09/00 ▸ | 6455CV | **817508** | 518 364 | AL |
| **2.0 i 16V** | E | 1997 | EW10J4 | +/ R134 | 09/00 ▸ | 6455CV | **817508** | 518 364 | AL |
| **2.0 i 16V** | E | 1998 | XU10J4RS | | 09/00 ▸ | 6455AV | **817230** | 568 341 | AL |
| **1.4 HDi** | D | 1399 | DV4TD | +/ R134 | 01/03 ▸ | 6455CV | **817508** | 518 364 | AL |
| **1.9 D** | D | 1868 | DW8B | +/ R134 | 09/00 ▸ | 6455CV | **817508** | 518 364 | AL |
| **1.9 D** | D | 1868 | DW8B | +/ R134 | 12/01 ▸ | 6455CQ | **817667** | 518 361 | AL |
| **2.0 HDi** | D | 1997 | DW10ATED | +/ R134 | 08/01 ▸ | 6455CV | **817508** | 518 364 | AL |
| **2.0 HDi** | D | 1997 | DW10ATED, DW10TD | +/ R134 | 09/00 ▸ | 6455CQ | **817667** | 518 361 | AL |
| **XSARA PICASSO** | | | | | | | | | |
| **1.6 i** | E | 1587 | TU5JP | +/ R134 | 12/99 ▸ | 6455CV | **817508** | 518 364 | AL |
| **1.8 i 16V** | E | 1749 | EW7J4 | +/ R134 | 12/99 ▸ | 6455CV | **817508** | 518 364 | AL |
| **2.0 i 16V** | E | 1997 | EW10J4 | +/ R134 | 01/03 ▸ | 6455CV | **817508** | 518 364 | AL |
| **1.6 HDi 16V** | D | 1560 | DV6ATED4, DV6TED4 | +/ R134 | 03/04 ▸ | 6455CN | **814080** | 520 363 | AL |
| **2.0 HDi** | D | 1997 | DW10TD | +/ R134 | 12/99 ▸ 10/03 | 6455CV | **817508** | 518 364 | AL |
| **2.0 HDi** 9877 ▸ | D | 1997 | DW10TD | +/ R134 | 11/03 ▸ | 6455CN | **814080** | 520 363 | AL |
| **ZX** | | | | | | | | | |
| **1.1, 1.1 i** | E | 1124 | TU1, TU1M, TU1M+ | | 01/93 ▸ 01/97 | 6455Q9 | **817230** | 568 341 | AL |
| **1.4, 1.4 i** | E | 1360 | TU3.2, TU3JP, TU3M TU3MC | | 01/93 ▸ 01/97 | 6455Q9 | **817230** | 568 341 | AL |
| **1.6 i** | E | 1580 | XU5JP, XU5M, XU5M2 | | 01/93 ▸ 01/97 | 6455Q9 | **817230** | 568 341 | AL |
| **1.8 i** | E | 1761 | XU7JP | | 01/93 ▸ 01/97 | 6455Q9 | **817230** | 568 341 | AL |
| **1.9 i** | E | 1905 | XU9JA | | 01/93 ▸ 08/93 | 6455Q9 | **817230** | 568 341 | AL |
| **2.0 i, 2.0 i 16V** | E | 1998 | XU10J2C, XU10J4 XU10J4RS | | 01/93 ▸ 01/97 | 6455Q9 | **817230** | 568 341 | AL |
| **1.4 D** | D | 1360 | TUD3 | | 07/94 ▸ 01/97 | 6455Q9 | **817230** | 568 341 | AL |
| **1.5 D** | D | 1527 | TUD5 | | 07/94 ▸ 01/97 | 6455Q9 | **817230** | 568 341 | AL |

Condenser Condenseur Kondensator Condensatore Condensor Condensador КОНДЕНСЕР Kondenser Kondenzátor Condensator Συμπυκνωτής



• **New** Nouveau **Nuevo** Novo **Nuovo** Nieuw **Neu** Nowość **Yeni** Новый Νέο **Novy**

| | | CC | | | | OE | Valeo | DIM | TECH |
|---|---|---|---|---|---|---|---|---|---|
| **CITROEN (.../...)** | | | | | | | | | |
| **ZX (.../...)** | | | | | | | | | |
| **1.8 D** | D | 1769 | XUD7 | | 01/93 ▸ 01/97 | 6455Q9 | **817230** | 568 341 | AL |
| **1.9 D, 1.9 TD** | D | 1905 | XUD9, XUD9A, XUD9TE | | 01/93 ▸ 07/98 | 6455Q9 | **817230** | 568 341 | AL |
| **CITROEN** | | | | | | | | | |
| **BERLINGO (96>2002)** | | | | | | | | | |
| **1.1 i** | E | 1124 | TU1M+ | | 07/96 ▸ 06/97 | 6455Q9 | **817230** | 568 341 | AL |
| **1.4, 1.4 i** | E | 1360 | TU3.2, TU3JP | | 07/96 ▸ 06/97 | 6455Q9 | **817230** | 568 341 | AL |
| **1.8 D** | D | 1769 | XUD7 | | 07/96 ▸ 07/99 | 6455V8 | **816984** | 630 339 | AL |
| **1.8 D** | D | 1769 | XUD7 | | 07/99 ▸ 12/02 | 6455Y2 | **817042** | 630 339 | AL |
| **1.9 D** | D | 1868 | DW8 | | 07/98 ▸ 07/99 | 6455V8 | **816984** | 630 339 | AL |
| **1.9 D** | D | 1868 | DW8 | | 07/99 ▸ 12/02 | 6455Y2 | **817042** | 630 339 | AL |
| **1.9 D** | D | 1905 | XUD9A | | 07/96 ▸ 07/99 | 6455V8 | **816984** | 630 339 | AL |
| **1.9 D** | D | 1905 | XUD9A | | 07/99 ▸ 12/02 | 6455Y2 | **817042** | 630 339 | AL |
| **2.0 HDi** | D | 1997 | DW10TD | | 10/99 ▸ 12/02 | 6455Y2 | **817042** | 630 339 | AL |
| **BERLINGO (2002>)** | | | | | | | | | |
| **1.1 i** | E | 1124 | TU1JP | R134 | 12/02 ▸ | 6455CV | **817508** | 518 364 | AL |
| **1.4 i** | E | 1360 | TU3JP | R134 | 12/02 ▸ | 6455CV | **817508** | 518 364 | AL |
| **1.6 i 16V** | E | 1587 | TU5JP4 | R134 | 12/02 ▸ | 6455CV | **817508** | 518 364 | AL |
| **1.6 HDi 16V** | D | 1560 | DV6ATED4, DV6BTED4 | R134 | 01/06 ▸ | 6455CN | **814080** | 520 363 | AL |
| **1.9 D** | D | 1868 | DW8B | R134 | 12/02 ▸ | 6455CV | **817508** | 518 364 | AL |
| **2.0 HDi** | D | 1997 | DW10TD | R134 | 12/02 ▸ | 6455CV | **817508** | 518 364 | AL |
| **BERLINGO (2008>)** | | | | | | | | | |
| **1.6 i 16V** | E | 1587 | TU5JP4, TU5JP4B | R134 | 05/08 ▸ | 6455GK | **818170** | 535 361 | AL |
| **1.6 HDi 16V** | D | 1560 | DV6ATED4, DV6AUTED4<br>DV6BTED4, DV6BUTED4<br>DV6TED4 | R134 | 05/08 ▸ | 6455CX | **818171** | 568 361 | AL |
| **DISPATCH (2004>)** | | | | | | | | | |
| **1.9 D** | D | 1868 | DW8B | R134 | 01/04 ▸ | 6455CV | **817508** | 518 364 | AL |
| **2.0 HDi** | D | 1997 | DW10BTED<br>DW10BTED+L4 | R134 | 01/04 ▸ | 6455CV | **817508** | 518 364 | AL |
| **DISPATCH (2007>)** | | | | | | | | | |
| **2.0 i 16V** | E | 1997 | EW10A | R134 | 03/07 ▸ | 6455AP | **817579** | 560 450 | AL |
| **JUMPER (94>2001)** | | | | | | | | | |
| **2.0 i** | E | 1998 | XU10J2U | | 02/94 ▸ 12/01 | 6455T3 | **818191** | 506 349 | AL |
| **1.9 D, 1.9 TD** | D | 1905 | XUD9A, XUD9AU<br>XUD9TEF, XUD9UTF | | 02/94 ▸ 12/01 | 6455T3 | **818191** | 506 349 | AL |
| **2.0 HDi** | D | 1997 | DW10TD | | 09/01 ▸ 12/01 | 6455T3 | **818191** | 506 349 | AL |
| **2.5 D, 2.5 TD, 2.5 TDi** | D | 2446 | DJ5, DJ5T, DJ5TED | | 02/94 ▸ 12/01 | 6455T3 | **818191** | 506 349 | AL |
| **2.8 D, 2.8 HDi, 2.8 TD** | D | 2798 | 8140-43, 8140-43S<br>8140-63 | | 06/99 ▸ 12/01 | 6455T3 | **818191** | 506 349 | AL |
| **JUMPER (2002>)** | | | | | | | | | |
| **2.0 i** ▸ 17126575 | E | 1998 | XU10J2U | | 01/02 ▸ 09/02 | 6455T3 | **818191** | 506 349 | AL |
| **2.0 i** 17126576 ▸ 17520375 | E | 1998 | XU10J2U | | 04/02 ▸ | 6455CG | **818018** | 506 349 | AL |
| **2.0 i** 17520376 ▸ | E | 1998 | XU10J2U | R134 | 04/02 ▸ | 6455EC | **814081** | 568 341 | AL |
| **2.0 HDi** ▸ 17126575 | D | 1997 | DW10UTD | | 01/02 ▸ 09/02 | 6455T3 | **818191** | 506 349 | AL |
| **2.0 HDi** 17126576 ▸ 17520375 | D | 1997 | DW10UTD | | 04/02 ▸ | 6455CG | **818018** | 506 349 | AL |
| **2.0 HDi** 17520376 ▸ | D | 1997 | DW10UTD | R134 | 04/02 ▸ | 6455EC | **814081** | 568 341 | AL |
| **2.2 HDi** ▸ 17126575 | D | 2179 | DW12TED | | 01/02 ▸ 09/02 | 6455T3 | **818191** | 506 349 | AL |
| **2.2 HDi** 17126576 ▸ 17520375 | D | 2179 | DW12TED | | 04/02 ▸ | 6455CG | **818018** | 506 349 | AL |
| **2.2 HDi** 17520376 ▸ | D | 2179 | DW12TED | R134 | 04/02 ▸ | 6455EC | **814081** | 568 341 | AL |
| **2.8 HDi** ▸ 17126575 | D | 2798 | F28TDCR | | 01/02 ▸ 09/02 | 6455T3 | **818191** | 506 349 | AL |

| | | CC | | | | OE | Valeo | DIM | TECH |
|---|---|---|---|---|---|---|---|---|---|
| **CITROEN** (.../...) | | | | | | | | | |
| **JUMPER (2002>) (.../...)** | | | | | | | | | |
| **2.8 HDi** 17126576 ▸ 17520375 | D | 2798 | F28TDCR | | 04/02 ▸ | 6455CG | **818018** | 506 349 | AL |
| **2.8 HDi** 17520376 ▸ | D | 2798 | F28TDCR | R134 | 04/02 ▸ | 6455EC | **814081** | 568 341 | AL |
| **JUMPER (2006>)** | | | | | | | | | |
| **2.2 HDi** | D | 2229 | 22DT | R134 | 07/06 ▸ | 6455EP | **814069** | 748 291 | AL |
| **2.2 HDi 16V** | D | 2229 | 22DT | | 07/06 ▸ | 6455EQ | **814085** | 710 375 | AL |
| **3.0 HDi** | D | 2999 | F30DT | R134 | 07/06 ▸ | 6455EP | **814069** | 748 291 | AL |
| **JUMPY** | | | | | | | | | |
| **1.6 i** | E | 1581 | 160A | | 09/95 ▸ | 6455Y3 | **816852** | 690 462 | AL |
| **1.9 D** | D | 1868 | DW8 | | 05/98 ▸ | 6455Y3 | **816852** | 690 462 | AL |
| **1.9 D, 1.9 TD** | D | 1905 | XUD9A, XUD9BTF XUD9TF | | 09/95 ▸ | 6455Y3 | **816852** | 690 462 | AL |
| **JUMPY (2007>)** | | | | | | | | | |
| **2.0 i 16V** | E | 1997 | EW10A | R134 | 03/07 ▸ | 6455AP | **817579** | 560 450 | AL |
| **NEMO** | | | | | | | | | |
| **1.4 i** | E | 1360 | TU3A | R134 | 12/07 ▸ | 6455GA | **818193** | 570 353 | AL |
| **1.4 HDi** | D | 1398 | DV4TED | R134 | 12/07 ▸ | 6455GA | **818193** | 570 353 | AL |
| **RELAY (94>2001)** | | | | | | | | | |
| **2.0 i** | E | 1998 | XU10J2U | | 02/94 ▸ 08/98 | 6455T3 | **818191** | 506 349 | AL |
| **1.9 D, 1.9 TD** | D | 1905 | XUD9A, XUD9UTF | | 02/94 ▸ 12/01 | 6455T3 | **818191** | 506 349 | AL |
| **2.5 D, 2.5 TD** | D | 2446 | DJ5, DJ5T | | 02/94 ▸ 08/98 | 6455T3 | **818191** | 506 349 | AL |
| **RELAY (2002>2006)** | | | | | | | | | |
| **2.0 i** 17126576 ▸ 17520375 | E | 1998 | XU10J2U | R134 | 04/02 ▸ | 6455CG | **818018** | 506 349 | AL |
| **2.0 i** 17520376 ▸ | E | 1998 | XU10J2U | R134 | | 6455EC | **814081** | 568 341 | |
| **2.0 HDi** 17126576 ▸ 17520375 | D | 1997 | DW10UTD | R134 | 04/02 ▸ | 6455CG | **818018** | 506 349 | AL |
| **2.0 HDi** 17520376 ▸ | D | 1997 | DW10UTD | R134 | | 6455EC | **814081** | 568 341 | |
| **2.2 HDi** 17126576 ▸ 17520375 | D | 2179 | DW12TED | R134 | 04/02 ▸ | 6455CG | **818018** | 506 349 | AL |
| **2.2 HDi** 17520376 ▸ | D | 2179 | DW12TED | R134 | | 6455EC | **814081** | 568 341 | |
| **2.8 HDi** 17126576 ▸ 17520375 | D | 2798 | F28TDCR | R134 | 04/02 ▸ | 6455CG | **818018** | 506 349 | AL |
| **2.8 HDi** 17520376 ▸ | D | 2798 | F28TDCR | R134 | | 6455EC | **814081** | 568 341 | |
| **DACIA** | | | | | | | | | |
| **DUSTER** | | | | | | | | | |
| **1.5 dCi** | D | 1461 | K9K.8.96 | R134 | 06/10 ▸ | 8200880551 | **814178** | 621 322 | AL |
| **LOGAN** | | | | | | | | | |
| **1.4 MPI** | E | 1390 | K7J.7.10 | R134 | 09/04 ▸ | 8200241088 | **817827** | 514 377 | AL |
| **1.4 MPI** ▸ 070120 | E | 1390 | K7J.7.10 | R134 | 09/04 ▸ | 8200513983 | **814051** | 514 377 | AL |
| **1.6 MPI** | E | 1598 | K7M.7.10 | R134 | 09/04 ▸ | 8200241088 | **817827** | 514 377 | AL |
| **1.6 MPI, 1.6 i, 1.6 i 16V** 070120 ▸ | E | 1598 | K4M.6.90, K4M.6.94 K7M.7.10, K7M.7.14 | R134 | 09/04 ▸ | 6001550660 | **814051** | 514 377 | AL |
| **1.5 dCi** | D | 1461 | K9K | | 09/05 ▸ | 8200182361 | **817701** | 538 388 | AL |
| **SANDERO** | | | | | | | | | |
| **1.4 MPI** | E | 1390 | K7J.7.10 | R134 | 06/08 ▸ | 6001550660 | **814051** | 514 377 | AL |
| **1.4 MPI** | E | 1390 | K7J.7.10 | R134 | 06/08 ▸ | 8200741257 | **814077** | 513 396 | AL |
| **1.6 MPI** | E | 1598 | K7M.7.10, K7M.7.14 | R134 | 06/08 ▸ | 6001550660 | **814051** | 514 377 | AL |
| **1.6 MPI** | E | 1598 | K7M.7.10, K7M.7.14 | R134 | 06/08 ▸ | 8200741257 | **814077** | 513 396 | AL |





• **New** Nouveau **Nuevo** Novo **Nuovo** Nieuw **Neu** Nowość **Yeni** Новый Νέο **Nový**

| | | CC | | | | OE | Valeo | DIM | TECH |
|---|---|---|---|---|---|---|---|---|---|
| **DAEWOO** | | | | | | | | | |
| **ESPERO** | | | | | | | | | |
| **2.0 i** | E | 1998 | C20LE | | 09/93 ▸ 05/99 | 96265216 | **814277** | 624 353 | AL |
| **NEXIA** | | | | | | | | | |
| **1,5 i** | E | 1498 | A15MF, G15MF | | 03/95 ▸ 07/05 | 96265216 | **814277** | 624 353 | AL |
| **DAF** | | | | | | | | | |
| **XF95-SERIES** | | | | | | | | | |
| **FA 95.380** | D | 12580 | XE 280 C | | 09/02 ▸ 12/06 | 1629115 | **818986** | 500 538 | AL |
| **FA 95.430** | D | 12580 | XE 315 C | | 09/02 ▸ 12/06 | 1629115 | **818986** | 500 538 | AL |
| **FA 95.480** | D | 12580 | XE 355 C | | 09/02 ▸ 12/06 | 1629115 | **818986** | 500 538 | AL |
| **FA 95.530** | D | 12580 | XE 390 C | | 09/02 ▸ 12/06 | 1629115 | **818986** | 500 538 | AL |
| **FT 95.380** | D | 12580 | XE 280 C | | 09/02 ▸ 12/06 | 1629115 | **818986** | 500 538 | AL |
| **FT 315** | D | 12580 | XE 315 C | | 09/02 ▸ 12/06 | 1629115 | **818986** | 500 538 | AL |
| **FT 355** | D | 12580 | XE 355 C | | 09/02 ▸ 12/06 | 1629115 | **818986** | 500 538 | AL |
| **XF105-SERIES** | | | | | | | | | |
| **FA 105.410** | D | 12900 | MX 300 | | 10/05 ▸ | 1629115 | **818986** | 500 538 | AL |
| **FA 105.460** | D | 12900 | MX 340 | | 10/05 ▸ | 1629115 | **818986** | 500 538 | AL |
| **FA 105.510** | D | 12900 | MX 375 | | 10/05 ▸ | 1629115 | **818986** | 500 538 | AL |
| **DAIHATSU** | | | | | | | | | |
| **TERIOS 2 (2006>)** | | | | | | | | | |
| **1.3 VVT 16V** | E | 1298 | K3-VE | R134 | 05/06 ▸ 11/06 | 88450B4020 | **814206** | 526 365 | AL |
| **1.5 VVT 16V** | E | 1495 | 3SZ-VE | R134 | 05/06 ▸ | 88450B4020 | **814206** | 526 365 | AL |
| **FIAT** | | | | | | | | | |
| **BRAVA** | | | | | | | | | |
| **1.2 i 16V** | E | 1242 | 182B2.000, 188A5.000 | Type Magneti Marelli | 10/98 ▸ 01/01 | 46527737 | **818009** | 556 310 | AL |
| **1.4 i, 1.4 i 12V** 4540396 ▸ | E | 1372 | 182A3.000, 182A5.000 | Type Magneti Marelli | 11/97 ▸ 09/98 | 46527737 | **818009** | 556 310 | AL |
| **1.6 i 16V** 4540396 ▸ | E | 1581 | 182A4.000, 182A6.000 | Type Magneti Marelli | 11/97 ▸ 09/98 | 46527737 | **818009** | 556 310 | AL |
| **1.8 i** | E | 1747 | 182A2.000 | | 10/97 ▸ | 46532988 | **818019** | 560 312 | AL |
| **BRAVO** | | | | | | | | | |
| **1.2 i 16V** | E | 1242 | 182B2.000, 188A5.000 | Type Magneti Marelli | 10/98 ▸ | 46527737 | **818009** | 556 310 | AL |
| **1.4 i** | E | 1372 | 182A3.000, 182A5.000 | Type Magneti Marelli | 11/97 ▸ 09/98 | 46527737 | **818009** | 556 310 | AL |
| **1.6 i 16V** | E | 1581 | 182A4.000, 182A6.000 | Type Magneti Marelli | 11/97 ▸ | 46527737 | **818009** | 556 310 | AL |
| **1.6 i 16V** | E | 1596 | 182B6.000 | Type Magneti Marelli | 10/98 ▸ | 46527737 | **818009** | 556 310 | AL |
| **1.8 i 16V** | E | 1747 | 182A2.000 | | 10/97 ▸ | 46532988 | **818019** | 560 312 | AL |
| **2.0 i 20V** | E | 1998 | 182B7.000 | | 10/98 ▸ | 46532988 | **818019** | 560 312 | AL |
| **1.9 JTD** | D | 1910 | 182B9.000 | Type Valeo | 03/00 ▸ | 46754752 | **817384** | 490 327 | AL |
| **BRAVO II (2007>)** | | | | | | | | | |
| **1.4 MPi 16V, 1.4 Tjet 16V** | E | 1368 | 192B2.000, 198A1.000<br>198A4.000 | R134 | 02/07 ▸ | 55700408 | **818192** | 540 263 | AL |
| **1.6 MJTD** | D | 1598 | 198A2.000/F<br>198A3.000 | R134 | 02/08 ▸ | 55700408 | **818192** | 540 263 | AL |
| **1.9, 1.9 MJTD, 1.9 MJTD 16V** | D | 1910 | 192A1.000, 192A8.000<br>192B5.000<br>937A5.000 | R134 | 02/07 ▸ | 55700408 | **818192** | 540 263 | AL |
| **CROMA** | | | | | | | | | |
| **2.5 TD** | D | 2500 | 8144-97Y, 8144-97Y7 | | 01/91 ▸ 12/92 | 82471989 | **814292** | 658 331 | AL |
| **IDEA** | | | | | | | | | |
| **1.2 i 16V** | E | 1242 | 188A5.000 | R134 | 02/04 ▸ | 46820833 | **818021** | 560 309 | AL |
| **1.4 i 16V** | E | 1368 | 192B2.000,350A1.000<br>843A1.000 | R134 | 10/03 ▸ | 46820833 | **818021** | 560 309 | AL |
| **1.3 JTD Multijet 16V** | D | 1248 | 188A9.000,199A3.000 | R134 | 10/03 ▸ | 46820833 | **818021** | 560 309 | AL |
| **1.9 JTD** | D | 1910 | 188B2.000 | | 02/04 ▸ | 51708909 | **818020** | 500 310 | AL |
| **MAREA** | | | | | | | | | |
| **1.2 i 16V** | E | 1242 | 182B2.000 | Type Magneti Marelli | 11/98 ▸ | 46527737 | **818009** | 556 310 | AL |

| | | CC | | | | OE | Valeo | DIM | TECH |
|---|---|---|---|---|---|---|---|---|---|
| **FIAT (.../...)** | | | | | | | | | |
| **MAREA (.../...)** | | | | | | | | | |
| **1.4 i 12V** 0136600 ▸ 5036718 | E | 1372 | 182A3.000 | Type Magneti Marelli | 10/97 ▸ | 46527737 | **818009** | 556 310 | AL |
| **1.6 i 16V, 1.6 i Bipower 16V** | E | 1581 | 182A4.000, 182B5.098 185A3.000 | Type Magneti Marelli | 01/97 ▸ | 46527737 | **818009** | 556 310 | AL |
| **1.6 i 16V, 1.6 i Bipower 16V** | E | 1581 | 182A4.000, 182B5.098 185A3.000 | Type Valeo | 03/00 ▸ | 46754752 | **817384** | 490 327 | AL |
| **1.6 i 16V** | E | 1596 | 182B6.000 | Type Magneti Marelli | 02/99 ▸ 05/00 | 46527737 | **818009** | 556 310 | AL |
| **1.6 i 16V** | E | 1596 | 182B6.000 | Type Valeo | 05/00 ▸ | 46754752 | **817384** | 490 327 | AL |
| **1.8 i 16V** 0136600 ▸ | E | 1747 | 182A2.000 | | 10/97 ▸ | 46532988 | **818019** | 560 312 | AL |
| **2.0 i 20V** 0136600 ▸ | E | 1998 | 182A1.000, 182B7.000 185A8.000 | | 10/97 ▸ | 46532988 | **818019** | 560 312 | AL |
| **2.4 JTD, 2.4 TD** | D | 2387 | 185A2.000, 185A6.000 | | 07/96 ▸ | 46440250 | **816985** | 500 364 | AL |
| **2.4 JTD** | D | 2387 | 185A6.000 | | 02/99 ▸ | 46532988 | **818019** | 560 312 | AL |
| **MULTIPLA (98>2003)** | | | | | | | | | |
| **1.6 i 16V, 1.6 i Bipower 16V 1.6 i Blupower 16V** | E | 1581 | 182A4.000, 186A3.000 186A4.000 | Type Valeo | 11/98 ▸ | 46754752 | **817384** | 490 327 | AL |
| **1.6 i Bipower 16V** | E | 1596 | 182B6.000 | Type Valeo | 08/00 ▸ | 46754752 | **817384** | 490 327 | AL |
| **1.9 JTD** | D | 1910 | 182B4.000, 186A6.000 186A8.000 | | 11/98 ▸ | 46547675 | **818007** | 574 296 | AL |
| **MULTIPLA (2004>)** | | | | | | | | | |
| **1.6 i 16V, 1.6 i Bi Power 16V** ▸ 2178783 | E | 1596 | 182B6.000 | Type Valeo | 07/04 ▸ | 46754752 | **817384** | 490 327 | AL |
| **1.9 JTD** ▸ 2178783 | D | 1910 | 186A8.000 | | 07/04 ▸ | 46547675 | **818007** | 574 296 | AL |
| **PANDA (2003>)** | | | | | | | | | |
| **1.1 i** | E | 1108 | 187A1.000 | +Ñ/ R134 | 09/03 ▸ | 51767143 | **818005** | 574 315 | AL |
| **1.1 i** | E | 1108 | 187A1.000 | +Ñ/ R134 | 09/06 ▸ | 51782753 | **818162** | 574 315 | AL |
| **1.2 i** | E | 1242 | 188A4.000 | +Ñ/ R134 | 09/03 ▸ | 51767143 | **818005** | 574 315 | AL |
| **1.2 i** | E | 1242 | 188A4.000 | +Ñ/ R134 | 09/06 ▸ | 51782753 | **818162** | 574 315 | AL |
| **1.4 16V** | E | 1368 | 169A3.000 | +Ñ/ R134 | 09/06 ▸ 10/06 | 51767143 | **818005** | 574 315 | AL |
| **1.3 JTD Multijet 16V** | D | 1248 | 188A9.000 | +Ñ/ R134 | 09/03 ▸ | 51767143 | **818005** | 574 315 | AL |
| **PUNTO II (99>2003)** | | | | | | | | | |
| **1.2 i, 1.2 i 16V** | E | 1242 | 188A4.000, 188A5.000 | Type Magneti Marelli | 07/99 ▸ 01/01 | 46788049 | **817684** | 574 311 | AL |
| **1.2 i, 1.2 i 16V** | E | 1242 | 188A4.000, 188A5.000 | +Ñ/ R134 / Type Magneti Marelli | 01/01 ▸ 06/02 | 46799862 | **818006** | 562 310 | AL |
| **1.2 i, 1.2 i 16V** | E | 1242 | 188A4.000, 188A5.000 | | 06/02 ▸ 06/03 | 46821270 | **818017** | 560 309 | AL |
| **1.2 i, 1.2 i 16V** | E | 1242 | 188A4.000, 188A5.000 | Type Valeo | 07/99 ▸ 06/03 | 46829340 | **817385** | 570 315 | AL |
| **1.8 i 16V** | E | 1747 | 183A1.000, 188A6.000 | Type Magneti Marelli | 07/99 ▸ 06/03 | 46788052 | **817685** | 498 311 | AL |
| **1.9 D, 1.9 JTD** | D | 1910 | 188A2.000, 188A3.000 188A7.000 | Type Magneti Marelli | 07/99 ▸ 06/03 | 46788052 | **817685** | 498 311 | AL |
| **PUNTO II (2003>)** | | | | | | | | | |
| **1.2 i, 1.2 i 16V, 1.2 i Bipower** | E | 1242 | 188A4.000, 188A5.000 | +Ñ/ R134 / Type Valeo | 07/03 ▸ | 51712975 | **817703** | 571 315 | AL |
| **1.2 i, 1.2 i Bipower** | E | 1242 | 188A4.000 | +Ñ/ R134 / Type Magneti Marelli | 07/03 ▸ | 46820833 | **818021** | 560 309 | AL |
| **1.4 i 16V** | E | 1368 | 843A1.000 | +Ñ/ R134 / Type Magneti Marelli | 07/03 ▸ | 46820833 | **818021** | 560 309 | AL |
| **1.8 i 16V** | E | 1747 | 188A6.000 | Type Magneti Marelli | 07/03 ▸ | 46788052 | **817685** | 498 311 | AL |
| **1.3 JTD 16V** | D | 1248 | 188A9.000 | +Ñ/ R134 / Type Magneti Marelli | 07/03 ▸ | 46820833 | **818021** | 560 309 | AL |
| **1.9 JTD** | D | 1910 | 188A7.000 | Type Magneti Marelli | 07/03 ▸ | 46788052 | **817685** | 498 311 | AL |
| **1.9 JTD** | D | 1910 | 188B2.000 | | 07/03 ▸ | 51733013 | **818020** | 500 310 | AL |
| **GRANDE PUNTO** | | | | | | | | | |
| **1.2 i 8V** | E | 1242 | 199A4.000 | +Ñ/ R134 | 10/05 ▸ | 55700406 | **818193** | 570 353 | AL |
| **1.4 MPi 8V, 1.4 i 8V** | E | 1368 | 350A1.000 | +Ñ/ R134 | 10/05 ▸ | 55700406 | **818193** | 570 353 | AL |
| **1.4 MPi 16V** | E | 1368 | 199A6.000 | +Ñ/ R134 | 10/05 ▸ | 55700406 | **818193** | 570 353 | AL |
| **1.4 MPi 16V** | E | 1368 | 198A4.000 | +Ñ/ R134 | 05/07 ▸ | 55700408 | **818192** | 540 263 | AL |
| **1.3 MJTD 16V** | D | 1248 | 199A2.000, 199A3.000 | +Ñ/ R134 | 10/05 ▸ | 55700408 | **818192** | 540 263 | AL |
| **1.9 JTD** | D | 1910 | 199A5.000, 939A1.000 | +Ñ/ R134 | 10/05 ▸ | 55700408 | **818192** | 540 263 | AL |
| **QUBO** | | | | | | | | | |
| **1.4 i 77** | F | 1368 | 350A1.000 GNV | +Ñ/ R134 | 10/09 ▸ | 55700406 | **818193** | 570 353 | AL |
| **1.3 MJTD 75 16V** | D | 1248 | 199A2.000 | +Ñ/ R134 | 05/08 ▸ | 55700406 | **818193** | 570 353 | AL |

Condenser Condenseur Kondensator Condensatore Condensor Condensador КОНДЕНСЕР Kondenser Kondenzátor Condensator Συμπυκνωτής



• **New** Nouveau **Nuevo** Novo **Nuovo** Nieuw **Neu** Nowość **Yeni** Новый Νέο **Novy**

| | | CC | | | | OE | Valeo | DIM | TECH |
|---|---|---|---|---|---|---|---|---|---|
| **FIAT (.../...)** | | | | | | | | | |
| **STILO (2001>2004)** | | | | | | | | | |
| **1.2 i 16V** | E | 1242 | 188A5.000 | R134 | 09/01 ▸ 12/03 | 46745840 | **817669** | 534 341 | AL |
| **1.6 i 16V** | E | 1596 | 182B6.000 | R134 | 09/01 ▸ 12/03 | 46745840 | **817669** | 534 341 | AL |
| **1.8 i 16V** | E | 1747 | 192A4.000 | R134 | 09/01 ▸ 12/03 | 46745840 | **817669** | 534 341 | AL |
| **2.4 i 20V** | E | 2446 | 192A2.000 | R134 | 09/01 ▸ 12/03 | 46745840 | **817669** | 534 341 | AL |
| **1.9 JTD** | D | 1910 | 192A1.000, 192A3.000 | R134 | 09/01 ▸ 12/03 | 46745840 | **817669** | 534 341 | AL |
| **STILO (2004>)** | | | | | | | | | |
| **1.4 16V, 1.4 i 16V** | E | 1368 | 843A1.000,192B2.000 | R134 | 01/04 ▸ | 46745840 | **817669** | 534 341 | AL |
| **1.6 16V, 1.6 i 16V** | E | 1596 | 1780000000, 182B6<br>192B3.000 | R134 | 01/04 ▸ | 46745840 | **817669** | 534 341 | AL |
| **1.8 16V, 1.8 i 16V** | E | 1747 | 192A4.000 | R134 | 01/04 ▸ | 46745840 | **817669** | 534 341 | AL |
| **2.4 i 20V** | E | 2446 | 192A2.000 | R134 | 01/04 ▸ | 46745840 | **817669** | 534 341 | AL |
| **1.9 JTD, 1.9 JTD 16V<br>1.9 JTD Multijet/16V** | D | 1910 | 192A1.000, 192A3.000<br>192A5.000<br>937A4.000 | R134 | 01/04 ▸ | 46745840 | **817669** | 534 341 | AL |
| **ULYSSE (94>98)** | | | | | | | | | |
| **1.8 ie** | E | 1761 | LFW | | 03/96 ▸ 09/98 | 1486721080 | **816852** | 690 462 | AL |
| **2.0 ie, 2.0 ie Turbo** | E | 1998 | RFU, RGX | | 06/94 ▸ 09/98 | 1486721080 | **816852** | 690 462 | AL |
| **1.9 TD** | D | 1905 | XUD9TEF/K<br>XUD9TEF/L3<br>XUD9TEF/Y | | 06/94 ▸ 09/98 | 1486721080 | **816852** | 690 462 | AL |
| **2.1 TD** | D | 2088 | P8C | | 03/96 ▸ 09/98 | 1486721080 | **816852** | 690 462 | AL |
| **ULYSSE (98>2002)** | | | | | | | | | |
| **1.8 ie** | E | 1761 | LFW | | 10/98 ▸ 08/02 | 1486721080 | **816852** | 690 462 | AL |
| **2.0 ie 16V** | E | 1997 | EW10J4/L4 | | 10/98 ▸ 08/02 | 1486721080 | **816852** | 690 462 | AL |
| **2.0 ie, 2.0 ie 16V, 2.0 ie Turbo** | E | 1998 | RFU, RFV, RGX | | 10/98 ▸ 08/02 | 1486721080 | **816852** | 690 462 | AL |
| **1.9 TD** | D | 1905 | XUD9TEF/K<br>XUD9TEF/L3 | | 10/98 ▸ 08/02 | 1486721080 | **816852** | 690 462 | AL |
| **2.0 JTD, 2.0 JTD 16V** | D | 1997 | DW10ATED4, RHZ | | 10/99 ▸ 08/02 | 1486721080 | **816852** | 690 462 | AL |
| **2.1 TD** | D | 2088 | P8C | | 10/98 ▸ 08/02 | 1486721080 | **816852** | 690 462 | AL |
| **ULYSSE (2002>)** | | | | | | | | | |
| **2.0 i 16V** | E | 1997 | EW10J4/L4 | R134 | 09/02 ▸ 07/06 | 1489398080 | **817579** | 560 450 | AL |
| **3.0 i V6 24V** | E | 2946 | ES9J4S/L4 | R134 | 09/02 ▸ 07/06 | 1489257080 | **817668** | 712 364 | AL |
| **2.0 JTD 16V** | D | 1997 | DW10ATED4 | R134 | 09/02 ▸ 07/06 | 1489398080 | **817579** | 560 450 | AL |
| **2.2 JTD 16V** | D | 2179 | DW12ATED4/L4 | R134 | 09/02 ▸ 07/06 | 1489398080 | **817579** | 560 450 | AL |
| **2.2 JTD 16V** | D | 2179 | DW12BTED4 | | 01/08 ▸ | 1401113180 | **814065** | 678 355 | AL |
| **500 NUOVA (2007>)** | | | | | | | | | |
| **1.2 MPi** | E | 1242 | 169A4.000 | | 07/07 ▸ | 51786211 | **814155** | 510 370 | |
| **1.3 MJTD 16V** | D | 1248 | 169A1.000 | | 07/07 ▸ | 51786211 | **814155** | 510 370 | |
| **1.4 MPi 16V** | E | 1368 | 169A3.000 | | 07/07 ▸ | 51786211 | **814155** | 510 370 | |
| **FIAT** | | | | | | | | | |
| **DOBLO (2000>2003)** | | | | | | | | | |
| **1.2 i** | E | 1242 | 223A5.000 | | 10/00 ▸ 12/03 | 46821270 | **818017** | 560 309 | AL |
| **DOBLO (2004>2005)** | | | | | | | | | |
| **1.3 MTJ 16V** | D | 1248 | 188A9.000 | | 01/04 ▸ | 46821270 | **818017** | 560 309 | AL |
| **1.9 JTD** | D | 1910 | 223A7.000 | | 09/05 ▸ 12/05 | 46821270 | **818017** | 560 309 | AL |
| **DOBLO II (2006>)** | | | | | | | | | |
| **1.3 MJTD 16V** | D | 1248 | 199A2.000,223A9.000 | R134 | 01/06 ▸ | 46820833 | **818021** | 560 309 | AL |
| **1.9 MJTD 8V** | D | 1910 | 186A9.000,223B2.000<br>223B1.000 | R134 | 01/06 ▸ | 46820833 | **818021** | 560 309 | AL |
| **DOBLO CARGO (2000>2003)** | | | | | | | | | |
| **1.9 JTD** | D | 1910 | 182B9.000 | | 10/01 ▸ 12/03 | 46821270 | **818017** | 560 309 | AL |
| **DOBLO CARGO (2004>2005)** | | | | | | | | | |
| **1.3 MTJ 16V** | D | 1248 | 188A9.000 | | 01/04 ▸ | 46821270 | **818017** | 560 309 | AL |
| **1.9 JTD** | D | 1910 | 182B9.000, 223A7.000 | | 01/04 ▸ | 46821270 | **818017** | 560 309 | AL |

| | | CC | | | | OE | Valeo | DIM | TECH |
|---|---|---|---|---|---|---|---|---|---|
| **FIAT (.../...)** | | | | | | | | | |
| **DOBLO CARGO II (2006>)** | | | | | | | | | |
| **1.3 MJTD** | D | 1248 | 199A2.000/223A9.000 | R134 | 01/06 ▸ | 46820833 | **818021** | 560 309 | AL |
| **1.9 MJTD** | D | 1910 | 223B2.000,223B1.000 | R134 | 01/06 ▸ | 46820833 | **818021** | 560 309 | AL |
| **DUCATO (94>2001)** | | | | | | | | | |
| **2.0, 2.0 i** | E | 1998 | XU102CU/W2<br>XU10J2U/W2 | | 02/94 ▸ 12/01 | 1312857080 | **818191** | 506 349 | AL |
| **1.9 D, 1.9 TD** | D | 1905 | XUD9A/K, XUD9TEF/W3 | | 06/98 ▸ 12/01 | 1312857080 | **818191** | 506 349 | AL |
| **1.9 D, 1.9 TD** | D | 1929 | 230A2.000, 230A3.000<br>230A4.000 | | 02/94 ▸ 12/01 | 1312857080 | **818191** | 506 349 | AL |
| **2.5 D, 2.5 TD** | D | 2499 | 8140-47/47R, 8140-67 | | 02/94 ▸ 12/01 | 1312857080 | **818191** | 506 349 | AL |
| **2.8 D, 2.8 JTD, 2.8 TDi** | D | 2798 | 8140-43/S, 8140-63 | | 01/98 ▸ 12/01 | 1312857080 | **818191** | 506 349 | AL |
| **DUCATO (2002>)** | | | | | | | | | |
| **2.0 i** ▸ 7126575 | E | 1998 | RFL | | 01/02 ▸ 09/02 | 1312857080 | **818191** | 506 349 | AL |
| **2.0 i** ▸ 7126575 | E | 1998 | RFL | | 04/02 ▸ 09/04 | 1340166080 | **818018** | 506 349 | AL |
| **2.0 JTD** ▸ 7126575 | D | 1997 | RHV | | 01/02 ▸ 09/02 | 1312857080 | **818191** | 506 349 | AL |
| **2.0 JTD** ▸ 7126575 | D | 1997 | RHV | | 04/02 ▸ 09/04 | 1340166080 | **818018** | 506 349 | AL |
| **2.3 JTD** ▸ 7126575 | D | 2286 | FIAE0481C | | 01/02 ▸ 09/02 | 1312857080 | **818191** | 506 349 | AL |
| **2.3 JTD** ▸ 7126575 | D | 2286 | FIAE0481C | | 04/02 ▸ 09/04 | 1340166080 | **818018** | 506 349 | AL |
| **2.8 JTD, 2.8 TD** ▸ 7126575 | D | 2798 | 8140-43, 8140-43S | | 01/02 ▸ 09/02 | 1312857080 | **818191** | 506 349 | AL |
| **2.8 JTD, 2.8 TD** ▸ 7126575 | D | 2798 | 8140-43, 8140-43S | | 04/02 ▸ 09/04 | 1340166080 | **818018** | 506 349 | AL |
| **FIORINO (2008>)** | | | | | | | | | |
| **1.4 i** | E | 1360 | KFV | R134 | 12/07 ▸ | 55700406 | **818193** | 570 353 | AL |
| **1.3 MJTD 16V** | D | 1248 | 199A2.000 | R134 | 12/07 ▸ | 55700406 | **818193** | 570 353 | AL |
| **SCUDO (95>2003)** | | | | | | | | | |
| **1.6 i** | E | 1581 | 220A2.000 | | 07/95 ▸ 12/03 | 1486721080 | **816852** | 690 462 | AL |
| **2.0 i 16V** | E | 1997 | EW10J4/L4 | | 09/00 ▸ 12/03 | 1486721080 | **816852** | 690 462 | AL |
| **1.9 D** | D | 1868 | DW8/W3, DW8B/L4 | | 07/96 ▸ 12/03 | 1486721080 | **816852** | 690 462 | AL |
| **1.9 D, 1.9 TD** | D | 1905 | XUD9A/K, XUD9TEF/K<br>XUD9TEF/L3<br>XUD9TEF/W3 | | 07/95 ▸ 12/03 | 1486721080 | **816852** | 690 462 | AL |
| **2.0 JTD, 2.0 JTD 16V** | D | 1997 | DW10ATED4, RHX, RHZ | | 02/00 ▸ 12/03 | 1486721080 | **816852** | 690 462 | AL |
| **SCUDO (2004>)** | | | | | | | | | |
| **2.0 16V** | E | 1997 | EW10J4/L4 | | 01/04 ▸ | 1486721080 | **816852** | 690 462 | AL |
| **1.9 D** | D | 1868 | DW8B/L4 | | 01/04 ▸ | 1486721080 | **816852** | 690 462 | AL |
| **2.0 JTD, 2.0 JTD 16V** | D | 1997 | DW10ATED4<br>DW10BTED/L4<br>DW10BTED+L4 | | 01/04 ▸ | 1486721080 | **816852** | 690 462 | AL |
| **FORD** | | | | | | | | | |
| **C-MAX** | | | | | | | | | |
| **2.0 TDCi** | D | | N13B16K0, 55B3000<br>N57D3001 | | 08/10 ▸ | 8V6119710FA | **814197** | 587 470 | AL |
| **COUGAR** | | | | | | | | | |
| **2.0 i** | E | 1998 | EDB | | 05/99 ▸ 02/01 | 4144369 | **817232** | 588 391 | AL |
| **2.5 i V6** | E | 2544 | LCB | | 09/98 ▸ 06/00 | 4144369 | **817232** | 588 391 | AL |
| **FIESTA (2002>2005)** | | | | | | | | | |
| **1.2 i 16V** | E | 1242 | 1.25 ZETEC-S<br>1.25 ZETEC-S/DU | | 02/03 ▸ 09/05 | 1254203 | **817664** | 538 361 | AL |
| **1.3 i** | E | 1299 | BAJA<br>DURATEC 1.3 EFI | | 03/02 ▸ 09/05 | 1254203 | **817664** | 538 361 | AL |
| **1.4 i 16V** | E | 1388 | FXJA | | 03/02 ▸ 09/05 | 1146195 | **817664** | 538 361 | AL |
| **1.6 i 16V** | E | 1596 | ZETEC-S 1.6 EFI | | 03/02 ▸ 09/05 | 1254203 | **817664** | 538 361 | AL |
| **2.0 i 16V** | E | 1999 | NAJB | | 01/05 ▸ 09/05 | 1384859 | **814083** | 578 361 | AL |

Condenser Condenseur Kondensator Condensatore Condensor Condensador КОНДЕНСЕР Kondenser Kondenzátor Condensator Συμπυκνωτής



• **New** Nouveau **Nuevo** Novo **Nuovo** Nieuw **Neu** Nowość **Yeni** Новый Νέο **Novy**

| | | CC | | | | OE | Valeo | DIM | TECH |
|---|---|---|---|---|---|---|---|---|---|

# FORD (.../...)

## FIESTA (2002>2005) (.../...)

| | | | | | | | | | |
|---|---|---|---|---|---|---|---|---|---|
| **1.4 TDCi** | D | 1399 | F6JA | | 03/02 ▸ 09/05 | 1146195 | **817664** | 538 361 | AL |
| **1.6 TDCi 16V** | D | 1560 | HHDA/B | | 11/04 ▸ 09/05 | 1254203 | **817664** | 538 361 | AL |

## FIESTA (2005>)

| | | | | | | | | | |
|---|---|---|---|---|---|---|---|---|---|
| **1.3 i** | E | 1299 | A9A/B, BAJA | | 10/05 ▸ | 1363775 | **818195** | 537 365 | AL |
| **1.4 i 16V** | E | 1388 | ASDA/B | | 10/05 ▸ | 1363775 | **818195** | 537 365 | AL |
| **1.6 i 16V** | E | 1596 | HWDA/B | | 10/05 ▸ | 1363775 | **818195** | 537 365 | AL |
| **2.0 i 16V** | E | 1999 | NAJB | | 10/05 ▸ | 1363775 | **818195** | 537 365 | AL |
| **1.4 TDCi** | D | 1399 | DURATQ14 | | 10/05 ▸ | 1363775 | **818195** | 537 365 | AL |
| **1.6 TDCi 16V** | D | 1560 | HHDA/B | | 10/05 ▸ | 1334653 | **818194** | 560 381 | AL |

## FOCUS (98>2001)

| | | | | | | | | | |
|---|---|---|---|---|---|---|---|---|---|
| **1.4 i** | E | 1388 | FXDA, FXDC | | 10/98 ▸ 10/01 | 1086534 | **817493** | 628 361 | AL |
| **1.6 i** | E | 1596 | FYDA, FYDC | | 10/98 ▸ 10/01 | 1086534 | **817493** | 628 361 | AL |
| **1.8 i** | E | 1796 | EYDA, EYDC | | 10/98 ▸ 10/01 | 1136949 | **817493** | 628 361 | AL |
| **2.0 i** | E | 1988 | EDDA, EDDC | | 10/98 ▸ 10/01 | 1136949 | **817493** | 628 361 | AL |
| **1.8 TDCi, 1.8 TDi** | D | 1753 | FFDA,C9DA/B/C<br>C9DA/B/C,BHDA/B | | 10/98 ▸ 10/01 | 1136949 | **817493** | 628 361 | AL |

## FOCUS (2001>2003)

| | | | | | | | | | |
|---|---|---|---|---|---|---|---|---|---|
| **1.4 i 16V** | E | 1388 | FXDA, FXDC | | 11/01 ▸ 12/02 | 1250627 | **817493** | 628 361 | AL |
| **1.6 i 16V** | E | 1596 | FYDA, FYDC | | 11/01 ▸ 12/02 | 1250627 | **817493** | 628 361 | AL |
| **1.8 i 16V** | E | 1796 | EYDA, EYDC | | 11/01 ▸ 12/02 | 1250627 | **817493** | 628 361 | AL |
| **2.0 i 16V, 2.0 i Turbo 16V** | E | 1988 | D20RS, EDDA, EDDC<br>ZH20EST | | 11/01 ▸ 12/02 | 1250627 | **817493** | 628 361 | AL |
| **1.8 TDCi, 1.8 TDdi** | D | 1753 | FFDA,C9DA/B/C<br>C9DA/B/C,BHDA/B | | 11/01 ▸ 12/02 | 1250627 | **817493** | 628 361 | AL |

## FOCUS (2004>)

| | | | | | | | | | |
|---|---|---|---|---|---|---|---|---|---|
| **1.4 i 16V** | E | 1388 | ASDA/B | | 09/04 ▸ | 1335552 | **818046** | 628 374 | AL |
| **1.6 Ti-VCT 16V, 1.6 i 16V** | E | 1596 | HXDA,HWDA/B,16LSEZ | | 09/04 ▸ | 1335552 | **818046** | 628 374 | AL |
| **1.8 i CNG 16V**<br>**1.8 i Flexifuel 16V** | F | 1798 | DURA18CNG<br>DURA18FLEX | | 11/04 ▸ | 1335552 | **818046** | 628 374 | AL |
| **2.0 i 16V** | E | 1999 | AODA/B | | 11/04 ▸ | 1335552 | **818046** | 628 374 | AL |
| **2.5 i 20V** | E | 2521 | 2.5 DURATEC 220 | | 10/05 ▸ | 1335552 | **818046** | 628 374 | AL |
| **1.6 TDCi 16V, 1.6 TDCi DPF 16V** | D | 1560 | D16FAP, HHDA/B | | 09/04 ▸ | 1335552 | **818046** | 628 374 | AL |
| **1.8 TDCi** | D | 1753 | KKDA | | 11/04 ▸ | 1335552 | **818046** | 628 374 | AL |
| **2.0 TDCi 16V, 2.0 TDCi DPF 16V** | D | 1997 | D20TDCI, D20TDCIFAP | | 09/04 ▸ | 1335552 | **818046** | 628 374 | AL |

## FOCUS

| | | | | | | | | | |
|---|---|---|---|---|---|---|---|---|---|
| **2.0 TDCi** | D | 1997 | N13B16U0, N55B30<br>N47D20T1 | | 08/10 ▸ | 8V6119710FA | **814197** | 587 470 | AL |

## FOCUS C-MAX

| | | | | | | | | | |
|---|---|---|---|---|---|---|---|---|---|
| **1.6 Ti-VCT 16V, 1.6 i 16V** | E | 1596 | ZH16-E4, ZH16TIVCT | | 10/03 ▸ | 1335552 | **818046** | 628 374 | AL |
| **1.8 i 16V** | E | 1798 | ZH18 | | 10/03 ▸ | 1234248 | **818046** | 628 374 | AL |
| **2.0 i 16V** | E | 1999 | ZH20-E4 | | 10/03 ▸ | 1234248 | **818046** | 628 374 | AL |
| **1.6 TDCi 16V** | D | 1560 | D16TDCI | | 10/03 ▸ | 1335552 | **818046** | 628 374 | AL |
| **2.0 TDCi 16V** | D | 1997 | D20TDCI | | 10/03 ▸ | 1234248 | **818046** | 628 374 | AL |

## FUSION (2002>2005)

| | | | | | | | | | |
|---|---|---|---|---|---|---|---|---|---|
| **1.25 i 16V** | E | 1242 | 1.25 ZETEC-S/DU | | 08/04 ▸ 09/05 | 1254203 | **817664** | 538 361 | AL |
| **1.4 i 16V** | E | 1388 | FXJA | | 06/02 ▸ 09/05 | 1146195 | **817664** | 538 361 | AL |
| **1.6 i 16V** | E | 1596 | ZETEC-S 1.6 EFI | | 06/02 ▸ 09/05 | 1146195 | **817664** | 538 361 | AL |
| **1.4 TDCi** | D | 1399 | F6JA | | 06/02 ▸ 09/05 | 1146195 | **817664** | 538 361 | AL |
| **1.6 TDCi 16V** | D | 1560 | HHDA/B | | 11/04 ▸ 09/05 | 1254203 | **817664** | 538 361 | AL |

## FUSION (2005>)

| | | | | | | | | | |
|---|---|---|---|---|---|---|---|---|---|
| **1.2 i 16V** | E | 1242 | DURAZET125 | | 10/05 ▸ | 1363775 | **818195** | 537 365 | AL |
| **1.4 i 16V** | E | 1388 | ASDA/B | | 10/05 ▸ | 1363775 | **818195** | 537 365 | AL |
| **1.6 i 16V** | E | 1596 | HWDA/B | | 10/05 ▸ | 1363775 | **818195** | 537 365 | AL |
| **1.4 TDCi** | D | 1399 | DURATQ14 | | 10/05 ▸ | 1363775 | **818195** | 537 365 | AL |
| **1.6 TDCi 16V** | D | 1560 | HHDA/B | | 10/05 ▸ | 1334196 | **818194** | 560 381 | AL |

## GALAXY (95>2000)

| | | | | | | | | | |
|---|---|---|---|---|---|---|---|---|---|
| **2.0 i** | E | 1998 | NSE | | 09/96 ▸ 03/00 | 1029057 | **816948** | 544 366 | AL |
| **2.8 i VR6** | E | 2792 | PW | | 09/96 ▸ 03/00 | 1029057 | **816948** | 544 366 | AL |

| | | CC | | | | OE | Valeo | DIM | TECH |
|---|---|---|---|---|---|---|---|---|---|
| **FORD (.../...)** | | | | | | | | | |
| **GALAXY (95>2000) (.../...)** | | | | | | | | | |
| **1.9 TDi** | D | 1896 | MF | | 09/96 ▸ 03/00 | 1029057 | **816948** | 544 366 | AL |
| **GALAXY (2000>)** | | | | | | | | | |
| **2.0 i** | E | 1998 | NSE | R134 | 01/01 ▸ 10/01 | 1108838 | **818004** | 554 361 | AL |
| **2.3 i** | E | 2295 | Y5, Y5B | R134 | 04/00 ▸ 10/01 | 1108838 | **818004** | 554 361 | AL |
| **2.8 i V6** | E | 2792 | PW-204 | R134 | 04/00 ▸ 10/01 | 1108838 | **818004** | 554 361 | AL |
| **1.9 TDi** | D | 1896 | AUY1, MF | R134 | 04/00 ▸ 10/01 | 1108838 | **818004** | 554 361 | AL |
| **GALAXY (2006>)** | | | | | | | | | |
| **2.0 i 16V** | E | 1999 | 2.0L DURATEC-HE | | 04/06 ▸ 03/10 | 1437112 | **814184** | 587 470 | AL |
| **2.5 i 20V** | E | 2521 | 2.5 DURATEC | | 04/06 ▸ 04/10 | 1437112 | **814184** | 587 470 | AL |
| **1.8 TDCi** | D | 1753 | 1.8 TC LYNX<br>1.8 TCD LYNX | | 04/06 ▸ 04/10 | 1437112 | **814184** | 587 470 | AL |
| **2.0 TDCi 16V** | D | 1997 | 2.0 DURATORQ<br>2.0TDCIDURATORQ | | 04/06 ▸ 03/10 | 1437112 | **814184** | 587 470 | AL |
| **KA** | | | | | | | | | |
| **1.0 i** | E | 999 | C4 | | 10/96 ▸ 04/99 | 1061104 | **817225** | 448 381 | AL |
| **1.3 i** | E | 1299 | J4D/K, J4M, JJB/D/F | | 09/96 ▸ 10/02 | 1061104 | **817225** | 448 381 | AL |
| **KUGA** | | | | | | | | | |
| **2.5 T 20V** | E | 2521 | 2.5 DC-ST | | 10/08 ▸ 04/10 | 1522067 | **814185** | 587 470 | AL |
| **2.0 TDCi 136** | D | 1997 | 2.0 DURATORQ/F | | 04/08 ▸ 03/10 | 1522067 | **814185** | 587 470 | AL |
| **MONDEO (96>2000)** | | | | | | | | | |
| **1.6 i** | E | 1597 | L1, L1J-90 | | 03/99 ▸ 08/00 | 4144369 | **817232** | 588 391 | AL |
| **1.8 i** | E | 1796 | RKJ | | 08/96 ▸ 08/00 | 4144369 | **817232** | 588 391 | AL |
| **2.0 i** | E | 1998 | NGA | | 08/96 ▸ 08/00 | 4144369 | **817232** | 588 391 | AL |
| **2.5 i V6** | E | 2495 | SE | | 04/99 ▸ 08/00 | 4144369 | **817232** | 588 391 | AL |
| **2.5 i V6** | E | 2544 | SEA | | 08/96 ▸ 08/00 | 4144369 | **817232** | 588 391 | AL |
| **1.8 TD** | D | 1753 | RFN | | 08/96 ▸ 08/00 | 4144369 | **817232** | 588 391 | AL |
| **MONDEO (2000>2002)** | | | | | | | | | |
| **1.8 i 16V** | E | 1798 | CGBA, CGBB, CHBA<br>CHBB | | 10/00 ▸ 11/01 | 1232914 | **817567** | 669 361 | AL |
| **1.8 i 16V** | E | 1798 | CGBA, CGBB, CHBA<br>CHBB | | 12/01 ▸ | 1152429 | **817657** | 628 361 | AL |
| **2.0 i 16V** | E | 1999 | CJBA, CJBB | | 10/00 ▸ 11/01 | 1142333 | **817567** | 669 361 | AL |
| **2.0 i 16V** | E | 1999 | CJBA, CJBB | | 12/01 ▸ | 1311098 | **817657** | 628 361 | AL |
| **2.5 i V6 24V** | E | 2495 | LCBD | | 10/00 ▸ 11/01 | 1142333 | **817567** | 669 361 | AL |
| **2.5 i V6 24V** | E | 2495 | LCBD | | 12/01 ▸ | 1152429 | **817657** | 628 361 | AL |
| **3.0 i V6 24V** | E | 2967 | MP30 | | 03/02 ▸ | 1232915 | **817657** | 628 361 | AL |
| **2.0 DI 16V, 2.0 TDCi 16V**<br>**2.0 TDDI 16V** | D | 1998 | D5BA, D6BA, PD | | 10/00 ▸ 11/01 | 1142333 | **817567** | 669 361 | AL |
| **2.0 DI 16V, 2.0 TDCi 16V**<br>**2.0 TDDI 16V** | D | 1998 | D5BA, D6BA, PD | | 12/01 ▸ | 1311098 | **817657** | 628 361 | AL |
| **MONDEO (2003>)** | | | | | | | | | |
| **1.8 SCi 16V** | E | 1798 | ZH18 | | 06/03 ▸ 04/05 | 1311098 | **817657** | 628 361 | AL |
| **2.5 i V6 24V** | E | 2495 | MP25N | | 06/03 ▸ 04/05 | 1311098 | **817657** | 628 361 | AL |
| **2.0 TDDi** | D | 1998 | D5BA | | 06/03 ▸ 04/05 | 1311098 | **817657** | 628 361 | AL |
| **MONDEO (2005>)** | | | | | | | | | |
| **1.8 i 16V** | E | 1798 | DURA18 | | 05/05 ▸ 05/07 | 1348012 | **817657** | 628 361 | AL |
| **2.0 i 16V** | E | 1999 | AODA/B | | 05/05 ▸ 05/07 | 1348012 | **817657** | 628 361 | AL |
| **3.0 i V6 24V** | E | 2967 | DURA30 | | 05/05 ▸ 05/07 | 1348012 | **817657** | 628 361 | AL |
| **MONDEO (2007>)** | | | | | | | | | |
| **2.0 203 16V** | E | 1999 | 2.0DC ECOBOOST | | 03/10 ▸ | 1437112 | **814184** | 587 470 | AL |
| **2.5 20V** | E | 2521 | 2.5 DURATEC | | 06/07 ▸ | 1437112 | **814184** | 587 470 | AL |
| **2.0 TDCi 163** | D | 1997 | 2.0DQ DOHC | | 03/10 ▸ | 1437112 | **814184** | 587 470 | AL |
| **2.2 TDCi** | D | 2179 | 2.2 DQ TDCI | | 07/08 ▸ | 1437112 | **814184** | 587 470 | AL |
| **SCORPIO (94>98)** | | | | | | | | | |
| **2.0 i 16V** | E | 1997 | N3A | | 10/94 ▸ 07/98 | 7286932 | **814289** | 552 388 | AL |
| **2.0 i** | E | 1998 | NSD,NSE | | 10/94 ▸ 07/98 | 7286932 | **814289** | 552 388 | AL |
| **2.3 i 16V** | E | 2295 | Y5A | | 05/96 ▸ 07/98 | 7286932 | **814289** | 552 388 | AL |

Condenser Condenseur Kondensator Condensatore Condensor Condensador КОНДЕНСЕР Kondenser Kondenzátor Condensator Συμπυκνωτής



• **New** Nouveau **Nuevo** Novo **Nuovo** Nieuw **Neu** Nowość **Yeni** Новый Νέο **Novy**

| | | CC | | | | OE | Valeo | DIM | TECH |
|---|---|---|---|---|---|---|---|---|---|
| **FORD (.../...)** | | | | | | | | | |
| **SCORPIO (94>98) (.../...)** | | | | | | | | | |
| **2.9 i** | E | 2933 | BRF | | 10/94 ▸ 08/96 | 7286932 | **814289** | 552 388 | AL |
| **2.9 i 24V** | E | 2935 | BOB | | 10/94 ▸ 07/98 | 7286932 | **814289** | 552 388 | AL |
| **2.5 TD** | D | 2500 | SCC,SCD | | 10/94 ▸ 07/98 | 7286932 | **814289** | 552 388 | AL |
| **S-MAX (2006>2010)** | | | | | | | | | |
| **1.8 TDCi** | D | 1753 | 1.8 TC LYNX<br>1.8 TCD LYNX | | 04/06 ▸ 06/10 | 1405365 | **814184** | 587 470 | AL |
| **2.0 TDCi 16V** | D | 1997 | 2.0 DURATORQ | | 04/06 ▸ 06/10 | 1437112 | **814184** | 587 470 | AL |
| **2.0 TDCi 16V** | D | 1998 | 2.0DI DURATORQ | | 04/06 ▸ | 1437112 | **814184** | 587 470 | AL |
| **2.0 i 16V** | E | 1999 | 2.0L DURATEC-HE | | 04/06 ▸ 06/10 | 1437112 | **814184** | 587 470 | AL |
| **2.0 i 16V** | F | 1999 | 2.0L DURATEC | | 03/08 ▸ 06/10 | 1437112 | **814184** | 587 470 | AL |
| **2.2 TDCi 16V** | D | 2179 | 2.2 DQ TDCI | | 07/08 ▸ 06/10 | 1437112 | **814184** | 587 470 | AL |
| **2.3 i Turbo 16V** | E | 2261 | 2.3 DURATEC HE | | 03/07 ▸ 06/10 | 1437112 | **814184** | 587 470 | AL |
| **2.5 i Turbo 20V** | E | 2521 | 2.5 DURATEC | | 04/06 ▸ 06/10 | 1405365 | **814184** | 587 470 | AL |
| **S-MAX (2010>)** | | | | | | | | | |
| **2.0 FFV 145 16V** | F | 1999 | 2.0L DURATEC | | 07/10 ▸ | 1437112 | **814184** | 587 470 | AL |
| **2.0 SCTi 145 16V** | E | 1999 | 2.0L DURATEC-HE | | 07/10 ▸ | 1437112 | **814184** | 587 470 | AL |
| **2.0 TDCi 136 16V**<br>**2.0 TDCi 163 16V** | D | 1997 | 2.0DQ CR TC 136<br>2.0DQ DOHC 163 | | 07/10 ▸ | 1437112 | **814184** | 587 470 | AL |
| **STREETKA** | | | | | | | | | |
| **1.6 i** | E | 1599 | CDA/B/C | R134 | 11/02 ▸ 12/05 | 1334283 | **817225** | 448 381 | AL |
| **FORD** | | | | | | | | | |
| **TRANSIT (2000>)** | | | | | | | | | |
| **2.3 i GPL 16V** | G | 2295 | E5FC | | 01/00 ▸ | 4041973 | **818050** | 805 360 | AL |
| **2.3 i 16V** | E | 2295 | E5FA | | 01/00 ▸ | 4471423 | **818050** | 805 360 | AL |
| **2.0 TDci, 2.0 TDdi** | D | 1998 | 20TDCI-125, 20TDI-85<br>ABFA, D3FA-E3 | | 08/00 ▸ | 4471423 | **818050** | 805 360 | AL |
| **2.4 TDCi, 2.4 TDI, 2.4 TDdi** | D | 2402 | D2FA, D4FA, DOFE<br>F4FA, FXFA, H9FA | | 01/00 ▸ | 4471423 | **818050** | 805 360 | AL |
| **TRANSIT (2006>)** | | | | | | | | | |
| **2.2 TDCi 110, 2.2 TDCi 130**<br>**2.2 TDCi 85** | D | 2198 | P8FA, QVFA, QWFA<br>QWFB | | 04/06 ▸ | 1383318 | **814087** | 568 391 | AL |
| **2.4 TDCi 100, 2.4 TDCi 115**<br>**2.4 TDCi 120, 2.4 TDCi 140** | D | 2402 | H9FC, HPFB, JXFA<br>JXFB, PHFA, PHFB | | 04/06 ▸ | 1383318 | **814087** | 568 391 | AL |
| **HONDA** | | | | | | | | | |
| **ACCORD COUPE (91>93)** | | | | | | | | | |
| **2.0 i** | E | 1997 | F20A7 | | 07/91 ▸ 08/93 | 80100SM1A23 | **814276** | 605 310 | AL |
| **ACCORD COUPE (93>97)** | | | | | | | | | |
| **2.0 i** | E | 1997 | F20B3, F20Z2 | | 03/93 ▸ 01/96 | 80110SV1A11 | **814302** | 563 318 | AL |
| **2.3 i SR** | E | 2259 | H23A3 | | 03/93 ▸ 01/96 | 80110SV1A11 | **814302** | 563 318 | AL |
| **2.2 i ES** | E | 2156 | F22B5, F22B5 | | 03/93 ▸ 01/96 | 80110SV1A11 | **814302** | 563 318 | AL |
| **ACCORD COUPE (97>2002)** | | | | | | | | | |
| **2.0 i** | E | 1997 | F20B5 | | 06/98 ▸ 06/02 | 80100S84A00 | **817783** | 590 358 | AL |
| **ACCORD (93>95)** | | | | | | | | | |
| **1.8 i** | E | 1849 | F18A3 | N | 07/93 ▸ 06/95 | 80100SN7E01 | **817781** | 605 310 | AL |
| **2.0 i** | E | 1997 | F20Z1,F20Z2 | N | 03/93 ▸ 06/95 | 80100SN7E01 | **817781** | 605 310 | AL |
| **2.0 i** | E | 1997 | F20Z1,F20Z2 | | 07/93 ▸ 06/95 | 80100SM1A23 | **814276** | 605 310 | AL |
| **2.3 i** | E | 2259 | H23A3 | | 07/93 ▸ 06/95 | 80100SM1A23 | **814276** | 605 310 | AL |
| **2.3 i** | E | 2259 | H23A3 | N | 07/93 ▸ 06/95 | 80100SN7E01 | **817781** | 605 310 | AL |
| **ACCORD (95>98)** | | | | | | | | | |
| **1.8 i** | E | 1849 | F18A3,F18A4 | N | 07/95 ▸ 08/98 | 80100SN7E01 | **817781** | 605 310 | AL |
| **2.0 i** | E | 1997 | F20Z1 | N | 07/95 ▸ 08/98 | 80100SN7E01 | **817781** | 605 310 | AL |
| **2.2 i** | E | 2156 | F22Z2 | N | 07/95 ▸ 08/98 | 80100SN7E01 | **817781** | 605 310 | AL |

| | | CC | | | | OE | Valeo | DIM | TECH |
|---|---|---|---|---|---|---|---|---|---|
| **HONDA** (.../...) | | | | | | | | | |
| **ACCORD (98>2003)** | | | | | | | | | |
| **1.6 i** | E | 1590 | D16B6,D16B7 | | 09/98 ▸ 01/03 | 80110S1AG01 | **817783** | 590 358 | AL |
| **1.8 i** | E | 1849 | F18B2,F18B4 | | 09/98 ▸ 01/03 | 80110S1AG01 | **817783** | 590 358 | AL |
| **2.0 i** | E | 1997 | F20B6 | | 09/98 ▸ 01/03 | 80110S1AG01 | **817783** | 590 358 | AL |
| **2.2 i** | E | 2157 | H22A7 | | 09/98 ▸ 01/03 | 80110S1AG02 | **817783** | 590 358 | AL |
| **2.3 i** | E | 2254 | F23Z5 | | 11/00 ▸ 01/03 | 80110S1AG02 | **817783** | 590 358 | AL |
| **ACCORD (2003>2008)** | | | | | | | | | |
| **2.0 i** | E | 1998 | K20A6 | +/ R134 | 02/03 ▸ 05/08 | 80110SEA003 | **814242** | 656 358 | AL |
| **2.2 i-CDTi 16V** | D | 2204 | N22A1 | +/ R134 | 02/04 ▸ 05/08 | 80101SEFE11 | **814159** | 656 358 | AL |
| **2.4 i** | E | 2354 | K24A3 | +/ R134 | 02/03 ▸ 05/08 | 80110SEA003 | **814242** | 656 358 | AL |
| **CIVIC (EP) (2001>)** | | | | | | | | | |
| **1.3 i** | E | 1339 | LDA1-MF3 | R134 | 01/04 ▸ 06/05 | 80110S6DG01 | **817780** | 610 348 | AL |
| **1.4 i 16V** | E | 1396 | D14Z5 | | 04/01 ▸ 06/06 | 80110S5A003 | **814243** | 610 358 | AL |
| **1.4 i,1.4 i 16V,1.4 i Sport 16V** | E | 1396 | D14Z5,D14Z6,LDA1-MF3 | R134 | 04/01 ▸ 06/06 | 80110S6DG01 | **817780** | 610 348 | AL |
| **1.6 i VTEC 16V** | E | 1590 | D16W7 | | 04/01 ▸ 06/06 | 80110S5A003 | **814243** | 610 358 | AL |
| **1.6 i VTEC 16V** | E | 1590 | D16V1,D16W7 | R134 | 04/01 ▸ 06/06 | 80110S6DG01 | **817780** | 610 348 | AL |
| **1.7 i 16V,1.7 i VTEC 16V** | E | 1668 | D17A8,D17A9 | | 04/01 ▸ 06/06 | 80110S5A003 | **814243** | 610 358 | AL |
| **2.0 i VTEC 16V** | E | 1998 | K20A2,K20A3 | | 09/01 ▸ 06/06 | 80110S5A003 | **814243** | 610 358 | AL |
| **CIVIC (FK/FD) (2006>)** | | | | | | | | | |
| **1.3 i-VTEC IMA,1.4 i** | E | 1339 | L13A7-1-2,LDA2-MF5 | +/ R134 | 01/06 ▸ | 80110SNBA41 | **814217** | 673 383 | AL |
| **1.4 i-VTEC** | E | 1339 | L13A7-3 | +/ R134 | 12/08 ▸ | 80110SMGE02 | **814315** | 616 407 | AL |
| **1.8 i 16V,1.8 i-VTEC 16V** | E | 1799 | R18A1 | +/ R134 | 01/06 ▸ | 80110SMGE02 | **814315** | 616 407 | AL |
| **1.8 i 16V** | E | 1799 | R18A1 | +/ R134 | 01/06 ▸ | 80110SNBA41 | **814217** | 673 383 | AL |
| **2.0 i-VTEC 16V** | E | 1998 | K20Z4 | +/ R134 | 01/07 ▸ | 80110SMGE02 | **814315** | 616 407 | AL |
| **2.2 i-CTDi 16V,2.2 iCDTi 16V** | D | 2204 | N22A1,N22A2,N22A2/F | +/ R134 | 01/06 ▸ | 80110SMGE02 | **814315** | 616 407 | AL |
| **2.2 iCDTi 16V** | D | 2204 | N22A1 | +/ R134 | 01/06 ▸ | 80110SNBA41 | **814217** | 673 383 | AL |
| **CR-V (97>2002)** | | | | | | | | | |
| **2.0 i** | E | 1973 | B20B,B20B3,B20Z1 B20Z3 | | 01/97 ▸ 02/02 | 80110S10003 | **818070** | 563 318 | AL |
| **CR-V (2002>2006)** | | | | | | | | | |
| **2.0 i VTEC 16V** | E | 1998 | K20A4 | +/ R134 | 03/02 ▸ 12/06 | 80110S9A003 | **814225** | 650 343 | AL |
| **2.2 iCTDi 16V** | D | 2204 | N22A1 | +/ R134 | 03/05 ▸ 12/06 | 80110S9A003 | **814225** | 650 343 | AL |
| **CR-V (2006>2010)** | | | | | | | | | |
| **2.0 i** | E | 1997 | R20A2 | +/ R134 | 01/07 ▸ | 80110SWAA01 | **814232** | 406 378 | AL |
| **2.4 i** | E | 2354 | K24A1 | +/ R134 | 01/07 ▸ | 80110SWAA01 | **814232** | 406 378 | AL |
| **2.2** | D | 2204 | N22A2 | +/ R134 | 01/07 ▸ | 80110SWAA01 | **814232** | 406 378 | AL |
| **JAZZ (2002>)** | | | | | | | | | |
| **1.2 i** | E | 1243 | L12A1 | +/ R134 | 01/02 ▸ 10/08 | 80110SAA003 | **814241** | 335 388 | AL |
| **1.4 i** | E | 1339 | L13A1 | +/ R134 | 01/02 ▸ 10/08 | 80110SAA003 | **814241** | 335 388 | AL |
| **STREAM** | | | | | | | | | |
| **1.7 i VTEC 16V** | E | 1668 | D17A2 | +/ R134 | 03/01 ▸ 09/05 | 80100S7A013 | **814267** | 668 368 | AL |
| **HYUNDAI** | | | | | | | | | |
| **ACCENT (94>99)** | | | | | | | | | |
| **1.3 i** | E | 1341 | G4EH62 | | 04/95 ▸ 09/99 | 9760622051 | **814255** | 544 318 | AL |
| **1.5 i,1.5 i 12V** | E | 1495 | G4EK-88,G4FK-99 | | 07/94 ▸ 09/99 | 9760622051 | **814255** | 544 318 | AL |
| **COUPE (2002>)** | | | | | | | | | |
| **1.6 i 16V** | E | 1599 | G4GRE2 | +/ R134 | 01/02 ▸ 12/06 | 976062D000 | **814264** | 576 358 | AL |
| **2.0 i 16V** | E | 1975 | G4GCG-141,G4GCG-E4 | +/ R134 | 01/02 ▸ 12/06 | 976062D000 | **814264** | 576 358 | AL |
| **2.7 i V6 24V** | E | 2657 | G6BA-G-167 | +/ R134 | 01/02 ▸ 12/06 | 976062D000 | **814264** | 576 358 | AL |
| **COUPÉ FL (2006>)** | | | | | | | | | |
| **1.6 i 16V** | E | 1599 | 1.6L-ALPHA DOHC | +/ R134 | 09/06 ▸ 09/08 | 976062D000 | **814264** | 576 358 | AL |
| **2.0 i 16V** | E | 1975 | 2.0L-BETA | +/ R134 | 09/06 ▸ 09/08 | 976062D000 | **814264** | 576 358 | AL |
| **2.7 i V6 24V** | E | 2656 | 2.7L-DELTA | +/ R134 | 09/06 ▸ 09/08 | 976062D000 | **814264** | 576 358 | AL |

Condenser Condenseur Kondensator Condensatore Condensor Condensador КОНДЕНСЕР Kondenser Kondenzátor Condensator Συμπυκνωτής



• **New** Nouveau **Nuevo** Novo **Nuovo** Nieuw **Neu** Nowość **Yeni** Новый Νέο **Novy**

| | | CC | | | | OE | Valeo | DIM | TECH |
|---|---|---|---|---|---|---|---|---|---|
| **HYUNDAI (.../...)** | | | | | | | | | |
| **ELANTRA (2000>2007)** | | | | | | | | | |
| **1.6 i,1.6 i 16V** | E | 1599 | G4EDG,G4GRE2 | R134 | 06/00 ▸ 01/07 | 976062D000 | **814264** | 576 358 | AL |
| **1.8 i** | E | 1796 | G4GM-132 | R134 | 06/00 ▸ 08/06 | 976062D000 | **814264** | 576 358 | AL |
| **2.0 i,2.0 i 16V** | E | 1975 | G4GCG-139,G4GCG-141 G4GCG-E4 | R134 | 06/00 ▸ 01/07 | 976062D000 | **814264** | 576 358 | AL |
| **2.0 CRDi 16V** | D | 1991 | D4-EA | R134 | 01/01 ▸ 01/07 | 976062D000 | **814264** | 576 358 | AL |
| **EXCEL (94>)** | | | | | | | | | |
| **1.3** | E | 1341 | G4EH62 | | 07/94 ▸ 09/99 | 9760622050 | **814255** | 544 318 | AL |
| **1.5 12V** | E | 1495 | G4EK-88 | | 07/94 ▸ 09/99 | 9760622051 | **814255** | 544 318 | AL |
| **PONY (94>)** | | | | | | | | | |
| **1.3 i** | E | 1341 | G4EH62 | | 07/94 ▸ 12/99 | 9760622051 | **814255** | 544 318 | AL |
| **1.5 i 12V** | E | 1495 | G4EK-88 | | 09/94 ▸ 12/99 | 9760622051 | **814255** | 544 318 | AL |
| **TIBURON** | | | | | | | | | |
| **1.6 i 16V** | E | 1599 | G4GRE2 | R134 | 01/02 ▸ 12/06 | 976062D000 | **814264** | 576 358 | AL |
| **2.0 i 16V** | E | 1975 | G4GF | R134 | 01/02 ▸ 12/06 | 976062D000 | **814264** | 576 358 | AL |
| **2.7 i V6 24V** | E | 2657 | G6BA-G-167 | R134 | 01/02 ▸ 12/06 | 976062D000 | **814264** | 576 358 | AL |
| **IVECO** | | | | | | | | | |
| **DAILY (99>)** | | | | | | | | | |
| **2.3 TD** | D | 2287 | F1AE0481A, F1AE0481B | | 06/02 ▸ | 504022601 | **818037** | 648 310 | AL |
| **2.8 D, 2.8 TD** | D | 2798 | 8140-43B/C/N/S 8140-63 | | 05/99 ▸ | 99487944 | **818036** | 700 312 | AL |
| **IVECO TRUCKS** | | | | | | | | | |
| **EUROCARGO** | | | | | | | | | |
| **120 E.23, 130 E.23, 135 E.23 150 E.23, 170 E.23, 260 E.23 280 E.23** | D | 5861 | 8060.45STCA | | 06/91 ▸ | 8189330 | **818038** | 570 480 | |
| **150 E.27, 170 E.27, 260 E.27 320 E.27** | D | 7685 | 836046TCA | | 06/91 ▸ | 8189330 | **818038** | 570 480 | |
| **60 E.12, 65 E.12, 75 E.12** | D | 3908 | 8040.25TC | | 06/91 ▸ | 8189330 | **818038** | 570 480 | |
| **60 E.14, 65 E.14, 75 E.14** | D | 3908 | 8040.45TCA | | 06/91 ▸ | 8189330 | **818038** | 570 480 | |
| **95 E.21, 150 E.21** | D | 5861 | 8060.45,8060E2 | | 06/91 ▸ | 8189330 | **818038** | 570 480 | |
| **EUROCARGO TECTOR RESTYLING (2003>)** | | | | | | | | | |
| **100 E.17, 120 E.17** | D | 3920 | 4F4AE0481A | | 06/03 ▸ | 504080822 | **818116** | 439 345 | |
| **100 E.18, 140 E.18** | D | 5880 | 6F4AE0681E | | 06/03 ▸ | 504080822 | **818116** | 439 345 | |
| **100E.21, 130E.21, 150E.21 180E.21** | D | 5880 | 6F4AE0681D | | 06/03 ▸ | 504080822 | **818116** | 439 345 | |
| **130 E.18, 140 E.18** | D | 5880 | 6F4AE0681E | | 06/03 ▸ | 504080822 | **818116** | 439 345 | |
| **130 E.28, 140 E.28, 150 E.28 160 E.28, 180 E.28, 260 E.28** | D | 5880 | 6F4AE0681A | | 06/03 ▸ | 504080822 | **818116** | 439 345 | |
| **140 E.18, 160 E.18** | D | 5880 | 6F4AE0681E | | 06/03 ▸ | 504080822 | **818116** | 439 345 | |
| **140 E.24, 150 E.24, 160 E.24 180 E.24** | D | 5880 | 6F4AE0681B | | 06/03 ▸ | 504080822 | **818116** | 439 345 | |
| **75 E13** | D | 3920 | 4F4AE0481D | | 06/03 ▸ | 504080822 | **818116** | 439 345 | |
| **75 E15** | D | 3920 | 4F4AE0481C | | 06/03 ▸ | 504080822 | **818116** | 439 345 | |
| **75 E17** | D | 3920 | 4F4AE0481A | | 06/03 ▸ | 504080822 | **818116** | 439 345 | |
| **EUROFIRE RESTYLING** | | | | | | | | | |
| **100 E.21** | D | 5880 | | | | 504080822 | **818116** | 439 345 | |
| **140 E.28, 150 E.28** | D | 5880 | | | | 504080822 | **818116** | 439 345 | |
| **EUROSTAR** | | | | | | | | | |
| **180 E.38, 190 E.38, 240 E.38 400 E.38, 440 E.38** | D | 13798 | 8210.42L | | 01/93 ▸ 02/02 | 8189330 | **818038** | 570 480 | |
| **180 E.42, 190 E.42, 240 E.42 400 E.42, 440 E.42** | D | 13798 | 8210.42L | | 09/92 ▸ 04/95 | 8189330 | **818038** | 570 480 | |
| **180 E.42, 190 E.42, 240 E.42 400 E.42, 440 E.42** | D | 13798 | 8210.42L S5000 | | 05/95 ▸ | 8189330 | **818038** | 570 480 | |
| **190 E.47, 240 E.47, 400 E.47 440 E.47** | D | 13798 | 8210.42L | | 09/92 ▸ 04/95 | 8189330 | **818038** | 570 480 | |
| **190 E.47, 240 E.47, 400 E.47 440 E.47** | D | 13798 | 8210.42L S5000 | | 05/95 ▸ | 8189330 | **818038** | 570 480 | |

# IVECO TRUCKS (.../...)

## EUROSTAR (.../...)

| | | CC | | | | OE | Valeo | DIM | TECH |
|---|---|---|---|---|---|---|---|---|---|
| **190 E.52, 240 E.52, 400 E.52 440 E.52** | D | 17173 | 8210.42L S5000 | | 05/95 ▸ | 8189330 | **818038** | 570 480 | |

## EUROSTAR CURSOR

| | | | | | | | | | |
|---|---|---|---|---|---|---|---|---|---|
| **180 E.39, 190 E.39, 240 E.39 260 E.39, 400 E.39, 440 E.39** | D | 10308 | F3AE0681E | | 10/99 ▸ | 8189330 | **818038** | 570 480 | |
| **180 E.43, 190 E.43, 240 E.43 260 E.43, 400 E.43, 440 E.43** | D | 10308 | F3AE0681D | | 10/99 ▸ | 8189330 | **818038** | 570 480 | |
| **190 E.39, 260 E.39, 440 E.39** | D | 10308 | F3AE0681 | | 10/97 ▸ | 8189330 | **818038** | 570 480 | |
| **190 E.40, 440 E.40** | D | 10308 | F3AE0681B | | 06/00 ▸ | 8189330 | **818038** | 570 480 | |
| **190 E.43, 260 E.43** | D | 10308 | F3AE0681D | | 10/97 ▸ | 8189330 | **818038** | 570 480 | |

## EUROSTAR LD

| | | | | | | | | | |
|---|---|---|---|---|---|---|---|---|---|
| **190 E.52, 240 E.52, 400 E.52 440 E.52** | D | 17174 | 8280.42S | | 09/92 ▸ 04/95 | 8189330 | **818038** | 570 480 | |

## EUROTECH

| | | | | | | | | | |
|---|---|---|---|---|---|---|---|---|---|
| **180 E.24, 190 E.24** | D | 7685 | 8360.46 | | 05/95 ▸ | 8189330 | **818038** | 570 480 | |
| **180 E.24, 190 E.24** | D | 7685 | 8360.46 | | 09/92 ▸ 04/95 | 8189330 | **818038** | 570 480 | |
| **180 E.27, 190 E.27** | D | 7685 | 8360.46 | | 09/92 ▸ 04/95 | 8189330 | **818038** | 570 480 | |
| **180 E.27, 190 E.27** | D | 7685 | 8360.46 | | 05/95 ▸ | 8189330 | **818038** | 570 480 | |
| **180 E.30, 190 E.30, 240 E.30 400 E.30, 440 E.30** | D | 9500 | 8460.41C/K/L | | 09/92 ▸ 04/95 | 8189330 | **818038** | 570 480 | |
| **180 E.30, 190 E.30, 240 E.30 400 E.30, 440 E.30** | D | 9500 | 8460.41C/K/L | | 05/95 ▸ | 8189330 | **818038** | 570 480 | |
| **180 E.34, 190 E.34, 240 E.34 400 E.34, 440 E.34** | D | 9500 | 8460.41C/K/L | | 09/92 ▸ 04/95 | 8189330 | **818038** | 570 480 | |
| **180 E.34, 190 E.34, 240 E.34 400 E.34, 440 E.34** | D | 9500 | 8460.41C/K/L | | 05/95 ▸ | 8189330 | **818038** | 570 480 | |
| **180 E.42, 240 E.42, 260 E.42 400 E.42, 440** | D | 13798 | 8210.42L | | 05/95 ▸ | 8189330 | **818038** | 570 480 | |
| **180E.38, 190E.38, 240E.38 260E.38, 400E.38, 440E.38** | D | 9500 | 8460.41C/K/L | | 05/95 ▸ | 8189330 | **818038** | 570 480 | |
| **180E.38, 190E.38, 240E.38 260E.38, 400E.38, 440E.38** | D | 9500 | 8460.41N | | 05/95 ▸ | 8189330 | **818038** | 570 480 | |
| **180E.38, 190E.38, 240E.38 400E.38, 440E.38** | D | 9500 | 8460.41C/K/L | | 09/92 ▸ 04/95 | 8189330 | **818038** | 570 480 | |
| **190 E.42, 240 E.42, 260 E.42 400 E.42, 440** | D | 13798 | 8210.42L | | 09/92 ▸ 04/95 | 8189330 | **818038** | 570 480 | |
| **190 E.42, 240 E.42, 260 E.42 400 E.42, 440** | D | 13798 | 8210.42L/E2 | | 05/95 ▸ | 8189330 | **818038** | 570 480 | |

## EUROTECH CURSOR

| | | | | | | | | | |
|---|---|---|---|---|---|---|---|---|---|
| **180 E.39, 190 E.39, 240 E.39 260 E.39, 400 E.39, 440 E.39** | D | 10308 | F3AE0681E | | 10/99 ▸ | 8189330 | **818038** | 570 480 | |
| **180 E.43, 190 E.43, 240 E.43 260 E.43, 400 E.43, 440 E.43** | D | 10308 | F3AE0681D | | 10/99 ▸ | 8189330 | **818038** | 570 480 | |
| **190 E.24, 260 E.24, 440 E.24** | D | 7790 | F2BE0681D | | 10/98 ▸ | 8189330 | **818038** | 570 480 | |
| **190 E.31, 260 E.31, 440 E.31** | D | 7790 | F2BE0681B | | 10/98 ▸ | 8189330 | **818038** | 570 480 | |
| **190 E.35, 260 E.35, 440 E.35** | D | 7790 | F2BE0681A | | 10/98 ▸ | 8189330 | **818038** | 570 480 | |

## EUROTRAKKER

| | | | | | | | | | |
|---|---|---|---|---|---|---|---|---|---|
| **90 E.31, 380 E.31, 400 E.31** | D | 13798 | 8210.22V | | 05/95 ▸ | 8189330 | **818038** | 570 480 | |
| **90 E.37, 260 E.37, 330 E.37 340 E.37, 380 E.37, 400 E.37 410 E.37, 440 E.37** | D | 13798 | 8210.42K | | 09/92 ▸ 04/95 | 8189330 | **818038** | 570 480 | |
| **190 E.34, 340 E.34, 380 E.34 400 E.34** | D | 9500 | 8460.41K | | 09/92 ▸ 04/95 | 8189330 | **818038** | 570 480 | |
| **190 E.34, 340 E.34, 380 E.34 400 E.34** | D | 9500 | 8460.41K | | 05/95 ▸ | 8189330 | **818038** | 570 480 | |
| **190, E.37, 260 E.37, 330 E.37 340 E.37, 380 E.37, 400 E.37 410 E.37, 440 E.37** | D | 13798 | 8210.42K | | 05/95 ▸ | 8189330 | **818038** | 570 480 | |
| **190 E.37, 260 E.37, 330 E.37 340 E.37, 380 E.37, 400 E.37 410 E.37, 440 E.37** | D | 13798 | 8210.42L | | 09/92 ▸ 04/95 | 8189330 | **818038** | 570 480 | |
| **190 E.37, 260 E.37, 330 E.37 340 E.37, 380 E.37, 400 E.37 410 E.37, 440 E.37** | D | 13798 | 8210.42L | | 05/95 ▸ | 8189330 | **818038** | 570 480 | |





• **New** Nouveau **Nuevo** Novo **Nuovo** Nieuw **Neu** Nowość **Yeni** Новый Νέο **Novy**

| | | CC | | | | OE | Valeo | DIM | TECH |
|---|---|---|---|---|---|---|---|---|---|
| **IVECO TRUCKS (.../...)** | | | | | | | | | |
| **EUROTRAKKER (.../...)** | | | | | | | | | |
| **180 E.25** | D | 9500 | 8460.41T | | 05/95 ▸ | 8189330 | **818038** | 570 480 | |
| **190 E.30, 260 E.30** | D | 9500 | 8460.41C E2/T | | 05/95 ▸ | 8189330 | **818038** | 570 480 | |
| **190 E.42, 260 E.42, 330 E.42 340 E.42, 380 E.42, 400 E.42 410 E.42, 440 E.42** | D | 13798 | 8210.42L / LE2 | | 05/95 ▸ | 8189330 | **818038** | 570 480 | |
| **EUROTRAKKER CURSOR** | | | | | | | | | |
| **190 E.24** | D | 7790 | F2BE0681C | | 10/98 ▸ | 8189330 | **818038** | 570 480 | |
| **190 E.27, 260 E.27** | D | 7790 | F2BE0681C | | 10/98 ▸ | 8189330 | **818038** | 570 480 | |
| **190 E.31, 260 E.31** | D | 7790 | F2BE0681B | | 10/98 ▸ | 8189330 | **818038** | 570 480 | |
| **190 E.35, 260 E.35, 340 E.35 380 E.35, 400 E.35, 410 E.35** | D | 7790 | F2BE0681A | | 10/98 ▸ | 8189330 | **818038** | 570 480 | |
| **190 E.35, 260 E.35, 380 E.35 400 E.35, 410 E.35** | D | 7790 | F2BE0681A | | 10/98 ▸ | 8189330 | **818038** | 570 480 | |
| **190 E.38, 260 E.38, 340 E.38 380 E.38** | D | 7790 | F2BE0681 | | 01/01 ▸ | 8189330 | **818038** | 570 480 | |
| **340 E.44, 380 E.44, 410 E.44** | D | 7790 | F2BE0681 | | 01/01 ▸ | 8189330 | **818038** | 570 480 | |
| **STRALIS** | | | | | | | | | |
| **AD 190S30, AD 190S31, AT 190S31** | D | | F2BE0681B, F2BE0681E F2BE3681C | + | 06/03 ▸ | 41214450 | **818985** | 606 438 | AL |
| **AS 190S40** | D | | F3AE0681B, F3AE0681H | + | 02/02 ▸ | 41214450 | **818985** | 606 438 | AL |
| **AS 440S54, ES 440S54** | D | | F3BE0681A | + | 02/02 ▸ | 41214450 | **818985** | 606 438 | AL |
| **AT 440S43** | D | | F3AE0681D | + | 06/03 ▸ | 41214450 | **818985** | 606 438 | AL |
| **JAGUAR** | | | | | | | | | |
| **X-TYPE** | | | | | | | | | |
| **2.0 i V6 24V** | E | 2099 | AJ-V6-2.0 | | 02/02 ▸ | C2S5302 | **818023** | 628 362 | AL |
| **2.5 i V6 24V** | E | 2495 | AJ-V6-2.5 | | 02/01 ▸ | C2S5302 | **818023** | 628 362 | AL |
| **3.0 i V6 24V** | E | 2967 | AJ-V6-3.0 | | 02/01 ▸ | C2S5302 | **818023** | 628 362 | AL |
| **2.0 D 16V** | D | 1998 | X404 | | 09/03 ▸ 06/07 | C2S31605 | **814199** | 668 311 | |
| **JEEP** | | | | | | | | | |
| **CHEROKEE (77>2001)** | | | | | | | | | |
| **2.5 TD** | D | 2499 | ENC | | 10/95 ▸ 06/97 | 55115863 | **817022** | 565 444 | AL |
| **GRAND CHEROKEE (93>99)** | | | | | | | | | |
| **4.0 i** | E | 3964 | ERH | R134 | 01/93 ▸ 06/97 | 55036473 | **818024** | 547 427 | AL |
| **4.0 i** | E | 3964 | ERH | | 07/97 ▸ 06/98 | 55115864 | **817023** | 565 444 | AL |
| **4.0 i** | E | 3964 | ERH | | 06/98 ▸ | 55115918AB | **817288** | 616 462 | AL |
| **5.2 i** | E | 5210 | ELF | R134 | 01/93 ▸ 06/96 | 56005016 | **818024** | 547 427 | AL |
| **5.2 i** | E | 5210 | ELF | | 07/96 ▸ 06/97 | 55115864 | **817023** | 565 444 | AL |
| **3.1 D** | D | 3124 | EXA | | 11/98 ▸ | 55115918AB | **817288** | 616 462 | AL |
| **GRAND CHEROKEE (99>2003)** | | | | | | | | | |
| **4.0 i** | E | 3964 | ERH | | 08/00 ▸ | 55115918AB | **817288** | 616 462 | AL |
| **4.7 i V8** | E | 4701 | EVA, EVC | | 08/00 ▸ | 55115918AB | **817288** | 616 462 | AL |
| **2.7 CRD** | D | 2688 | ENF | | 10/01 ▸ | 55115918AC | **817288** | 616 462 | AL |
| **KIA** | | | | | | | | | |
| **SPORTAGE** | | | | | | | | | |
| **2.0 i 4WD** | E | 1998 | FE | | 10/00 ▸ 08/03 | OK01161480C | **814250** | 478 393 | AL |
| **CARNIVAL** | | | | | | | | | |
| **2.5 V6** | E | 2497 | | | 08/99 ▸ 10/01 | OK55261460D | **814270** | 714 408 | AL |
| **SPORTAGE** | | | | | | | | | |
| **2.0 TD 4WD** | D | 1998 | RF | | 10/97 ▸ 08/03 | OK01161480C | **814250** | 478 393 | AL |
| **CARNIVAL** | | | | | | | | | |
| **2.9 TD** | D | 2903 | | | 08/99 ▸ 10/01 | OK55261460D | **814270** | 714 408 | AL |

| | | CC | | | | OE | Valeo | DIM | TECH |
|---|---|---|---|---|---|---|---|---|---|
| **LANCIA** | | | | | | | | | |
| **KAPPA** | | | | | | | | | |
| **2.0 ie 20V** | E | 1995 | 838A1.000,838A6.000 | | 10/94 ▸ 10/01 | 82487879 | **814293** | 488 387 | AL |
| **2.4 ie 20V** | E | 2446 | 838A2.000,838B2.000 | | 05/96 ▸ 10/01 | 82487879 | **814293** | 488 387 | AL |
| **3.0 ie V6 24V** | E | 2959 | 838B.000 | | 11/94 ▸ 10/01 | 82487879 | **814293** | 488 387 | AL |
| **LYBRA** | | | | | | | | | |
| **1.6 i 16V** | E | 1581 | 182A4.000 | N | 09/99 ▸ 06/02 | 46459581 | **817386** | 540 351 | AL |
| **1.8 i 16V** | E | 1747 | 839A4.000 | N | 09/99 ▸ 06/02 | 46459581 | **817386** | 540 351 | AL |
| **2.0 i 20V** | E | 1998 | 182B7.000 | N | 09/99 ▸ 06/02 | 46459581 | **817386** | 540 351 | AL |
| **1.9 JTD** | D | 1910 | AR32302, AR37101 | N | 09/99 ▸ 06/02 | 46459581 | **817386** | 540 351 | AL |
| **2.4 JTD** | D | 2387 | 839A5.000, 839A6.000 AR32501 | N | 09/99 ▸ 06/02 | 46459581 | **817386** | 540 351 | AL |
| **1.6 i 16V** | E | 1581 | 182A4.000 | + R134 | 07/02 ▸ 12/06 | 51708843 | **814198** | 544 351 | |
| **1.6 i 16V** | E | 1596 | 182B6.000 | + R134 | 08/02 ▸ 12/06 | 51708843 | **814198** | 544 351 | |
| **1.8 i 16V** | E | 1747 | 839A4.000,839A7.000 | + R134 | 07/02 ▸ 12/06 | 51708843 | **814198** | 544 351 | |
| **2.0 i 20V** | E | 1998 | 182B7.000,185A8.000 | + R134 | 07/02 ▸ 12/06 | 51708843 | **814198** | 544 351 | |
| **2.4 JTD** | D | 2387 | 839A5.000,839A6.000 AR32501 | + R134 | 09/99 ▸ | 51708843 | **814198** | 544 351 | |
| **1.9 JTD** | D | 1910 | 937A2.000,AR32302 AR37101 | + R134 | 07/02 ▸ 12/06 | 51708843 | **814198** | 544 351 | |
| **MUSA** | | | | | | | | | |
| **1.4 i 16V** | E | 1368 | 843A1.000,192B2.000 350A1.000 | + R134 / Type Magneti Marelli | 07/04 ▸ | 46820833 | **818021** | 560 309 | AL |
| **1.3 JTD Multijet 16V** | D | 1248 | 188A9.000,199A3.000 | + R134 / Type Magneti Marelli | 07/04 ▸ | 46820833 | **818021** | 560 309 | AL |
| **PHEDRA** | | | | | | | | | |
| **2.0 i 16V** | E | 1997 | EW10J4/L4 | + R134 | 09/02 ▸ | 1489398080 | **817579** | 560 450 | AL |
| **3.0 i V6 24V** | E | 2946 | ES9J4S/L4 | + R134 | 09/02 ▸ | 1489257080 | **817668** | 712 364 | AL |
| **2.0 JTD 16V** | D | 1997 | DW10ATED4 | + R134 | 09/02 ▸ | 1489398080 | **817579** | 560 450 | AL |
| **2.2 JTD 16V** | D | 2179 | DW12ATED4/L4 | + R134 | 09/02 ▸ | 1489398080 | **817579** | 560 450 | AL |
| **2.2 JTD 16V** | D | 2179 | DW12BTED4 | | 12/07 ▸ | 1401113180 | **814065** | 678 355 | AL |
| **THEMA** | | | | | | | | | |
| **2.0 i 16V** | E | 1995 | 834F1.000 | | 09/92 ▸ 11/94 | 1486721080 | **816852** | 690 462 | AL |
| **2.5 TDs** | D | 2500 | 8144-97Y,8144-97YC | | 09/92 ▸ 11/94 | 82471989 | **814292** | 658 331 | AL |
| **THESIS** | | | | | | | | | |
| **2.4 i 20V** | E | 2446 | 841D.000 | N | 09/02 ▸ | 60678468 | **817580** | 291 650 | |
| **3.0 i V6 24V** | E | 2959 | 841A.000 | N | 09/02 ▸ | 60678468 | **817580** | 291 650 | |
| **Y (2000>2003)** | | | | | | | | | |
| **1.2 i, 1.2 i 16V** | E | 1242 | 188A4.000, 188A5.000 | + R134 / Type Magneti Marelli | 09/00 ▸ 09/03 | 46820833 | **818021** | 560 309 | AL |
| **YPSILON (2003>)** | | | | | | | | | |
| **1.2 i, 1.2 i 16V** | E | 1242 | 188A4.000, 188A5.000 | + R134 / Type Magneti Marelli | 10/03 ▸ | 46820833 | **818021** | 560 309 | AL |
| **1.4 i 16V** | E | 1368 | 843A1.000 | + R134 / Type Magneti Marelli | 10/03 ▸ | 46820833 | **818021** | 560 309 | AL |
| **1.3 JTD 16V** | D | 1248 | 188A9.000 | + R134 / Type Magneti Marelli | 10/03 ▸ | 46820833 | **818021** | 560 309 | AL |
| **ZETA** | | | | | | | | | |
| **2.0 ie 16V** | E | 1997 | EW10J4/L4 | | 01/01 ▸ 08/02 | 1486721080 | **816852** | 690 462 | AL |
| **2.0 ie 16V, 2.0 ie Turbo** | E | 1998 | RFV, RGX | | 10/94 ▸ 12/00 | 1486721080 | **816852** | 690 462 | AL |
| **2.0 JTD** | D | 1997 | DW10ATED/L4 DW10ATED4 | | 01/00 ▸ 08/02 | 1486721080 | **816852** | 690 462 | AL |
| **2.1 TD** | D | 2088 | P8C | | 03/96 ▸ 12/00 | 1486721080 | **816852** | 690 462 | AL |
| **LAND ROVER** | | | | | | | | | |
| **DISCOVERY (98>2004)** | | | | | | | | | |
| **4.0 i V8 16V** | E | 3950 | 35D-185 | R134 | 11/98 ▸ 11/04 | JRB100790 | **818025** | 636 388 | AL |
| **2.5 Td5** | D | 2496 | LANDR01 | R134 | 11/98 ▸ 11/04 | JRB100790 | **818025** | 636 388 | AL |
| **FREELANDER** | | | | | | | | | |
| **1.8 i 16V** ▸ YA999999 | E | 1796 | 18K4FK | + R134 | 10/97 ▸ 12/00 | AWR5796 | **817067** | 510 437 | AL |
| **1.8 i 16V** 1A000001 ▸ | E | 1796 | 18K4FK | + R134 | 01/01 ▸ 09/03 | JRB101070 | **817549** | 625 313 | AL |
| **2.5 i V6** ▸ YA999999 | E | 2497 | 25K6 | + R134 | 03/00 ▸ 12/00 | AWR5796 | **817067** | 510 437 | AL |

Condenser Condenseur Kondensator Condensatore Condensor Condensador КОНДЕНСЕР Kondenser Kondenzátor Condensator Συμπυκνωτής



• **New** Nouveau **Nuevo** Novo **Nuovo** Nieuw **Neu** Nowość **Yeni** Новый Νέο **Novy**

| | | CC | | | | OE | Valeo | DIM | TECH |
|---|---|---|---|---|---|---|---|---|---|
| **LAND ROVER (.../...)** | | | | | | | | | |
| **FREELANDER (.../...)** | | | | | | | | | |
| **2.5 i V6** 1A000001 ▸ | E | 2497 | 25K6 | R134 | 01/01 ▸ 09/03 | JRB101070 | **817549** | 625 313 | AL |
| **2.0 Td4** ▸ YA999999 | D | 1951 | M47-112 | R134 | 09/00 ▸ 12/00 | AWR5796 | **817067** | 510 437 | AL |
| **2.0 Td4** 1A000001 ▸ | D | 1951 | M47-112 | R134 | 01/01 ▸ 09/03 | JRB101070 | **817549** | 625 313 | AL |
| **2.0 D** | D | 1994 | 20L4D | R134 | 10/97 ▸ 09/00 | AWR5796 | **817067** | 510 437 | AL |
| **FREELANDER (2006>)** | | | | | | | | | |
| **3.2 i V6** | E | 3192 | I6 | | 02/06 ▸ 09/06 | LR000566 | **814184** | 587 470 | AL |
| **2.2 TD4 16V** | D | 2179 | DW12 | | 02/06 ▸ | LR000566 | **814184** | 587 470 | AL |
| **RANGE ROVER (2002>2009)** | | | | | | | | | |
| **2.9 Td6 24V** | D | 2926 | M57D30 | | 03/02 ▸ 06/09 | JRW000020 | **814165** | 648 441 | |
| **4.4 i V8 32V** | E | 4398 | M62B44 | | 03/02 ▸ 05/05 | JRW000020 | **814165** | 648 441 | |
| **LEXUS** | | | | | | | | | |
| **IS (2005>)** | | | | | | | | | |
| **2.5 i V6 24V** | E | 2500 | 4GRFSE | R134 | 08/05 ▸ 08/08 | 8846053030 | **814226** | 679 332 | AL |
| **IS (2008>)** | | | | | | | | | |
| **2.5 i V6 24V** | E | 2500 | 4GRFSE | R134 | 08/08 ▸ | 8846053030 | **814226** | 679 332 | AL |
| **IS 250C (2009>)** | | | | | | | | | |
| **2.5 i V6 24V** | E | 2500 | 4GRFSE | R134 | 04/09 ▸ | 8846053030 | **814226** | 679 332 | AL |
| **LS 400 (94>2000)** | | | | | | | | | |
| **4.0 i V8 32V** | E | 3969 | 1UZ-FE | | 10/94 ▸ 08/00 | 8846050120 | **814310** | 714 388 | AL |
| **MAN** | | | | | | | | | |
| **F 2000** | | | | | | | | | |
| **19-33.343/403** | D | 10000 | D2865 | | 01/94 ▸ | 81619200012 | **818040** | 678 305 | |
| **19-33.343/403** | D | 10000 | D2865 | | 01/95 ▸ | 81619200012 | **818040** | 678 305 | |
| **19-41.463** | D | 12800 | D2876 | | 01/95 ▸ | 81619200012 | **818040** | 678 305 | |
| **19-41.463** | D | 12800 | D2876 | | 02/98 ▸ | 81619200012 | **818040** | 678 305 | |
| **20-45** | D | 12000 | D2866 | | 06/01 ▸ | 81619200012 | **818040** | 678 305 | |
| **F 90** | | | | | | | | | |
| **19.242/262/272/292** | D | 12000 | | | 09/91 ▸ | 81619206011 | **818041** | 688 260 | |
| **19.332/342/362/362/372** | D | 12000 | | | 09/91 ▸ | 81619206011 | **818041** | 688 260 | |
| **19.402/422/462/502** | D | 12000 | | | 09/91 ▸ | 81619206011 | **818041** | 688 260 | |
| **12-41.262/332/422** | D | 12000 | D2866 | | | 81619206018 | **818042** | 678 260 | |
| **12-41.262/332/422** | D | 12000 | D2866 | | 01/86 ▸ | 81619206018 | **818042** | 678 260 | |
| **12-41.262/332/422** | D | 12000 | D2866 | | 01/86 ▸ 1994 | 81619206018 | **818042** | 678 260 | |
| **12-41.372** | D | 12000 | D2866 | | 1990 ▸ | 81619206018 | **818042** | 678 260 | |
| **12-41.402** | D | 12000 | D2866 | | 1993 ▸ | 81619206018 | **818042** | 678 260 | |
| **12-41.422** | D | 12000 | D2866 | | 1994 ▸ | 81619206018 | **818042** | 678 260 | |
| **12-41.442** | D | 12000 | D2866 | | 1994 ▸ | 81619206018 | **818042** | 678 260 | |
| **261** | D | | D2866 | | | 81619206018 | **818042** | 678 260 | |
| **41.502** | D | 18300 | D2840 | | 09/91 ▸ | 81619206018 | **818042** | 678 260 | |
| **L 2000** | | | | | | | | | |
| **6/10.73/153/223** | D | | | | 10/93 ▸ | 81619200011 | **818043** | 585 250 | |
| **6/10.73/153/223** | D | | 6 CYL | | 10/93 ▸ | 81619200011 | **818043** | 585 250 | |
| **M 2000** | | | | | | | | | |
| **12-15.163 LC** | D | | | | 01/96 ▸ | 81619206026 | **818044** | 652 286 | |
| **12-18.224LC** | D | | | | 01/96 ▸ | 81619206026 | **818044** | 652 286 | |
| **12-18.264 LC** | D | | | | 01/96 ▸ | 81619206026 | **818044** | 652 286 | |
| **14-25.224MC** | D | | | | 01/96 ▸ | 81619206026 | **818044** | 652 286 | |
| **14-25.264 MC** | D | | | | 01/96 ▸ | 81619206026 | **818044** | 652 286 | |
| **M 90** | | | | | | | | | |
| **12.172/192** | D | | D0826 | | 10/93 ▸ | 81619206026 | **818044** | 652 286 | |

| | | CC | | | | OE | Valeo | DIM | TECH |
|---|---|---|---|---|---|---|---|---|---|
| **MAN** (.../...) | | | | | | | | | |
| **M 90 (.../...)** | | | | | | | | | |
| **14.232** | D | | D0826 | | 10/93 ▸ | 81619206026 | **818044** | 652 286 | |
| **18.272** | D | | D0826 | | 10/93 ▸ | 81619206026 | **818044** | 652 286 | |
| **TG-A** | | | | | | | | | |
| **310** | D | 11967 | D2866LF26 | | 04/00 ▸ | 81619200018 | **818033** | 745 353 | |
| **360** | D | 11967 | D2866LF27 | | 04/00 ▸ | 81619200018 | **818033** | 745 353 | |
| **410** | D | 11967 | D2866LF27 | | 04/00 ▸ | 81619200018 | **818033** | 745 353 | |
| **MAZDA** | | | | | | | | | |
| **2 (2003>)** | | | | | | | | | |
| **1.25 i 16V** | E | 1242 | DHC | | 03/03 ▸ | DE9461480B | **818195** | 537 365 | AL |
| **1.4 i 16V** | E | 1388 | ZH14 | | 03/03 ▸ | DE9461480B | **818195** | 537 365 | AL |
| **1.6 i 16V** | E | 1596 | DURA16 | | 03/03 ▸ | DE9461480B | **818195** | 537 365 | AL |
| **1.4 MZ-CD** | D | 1399 | MZ14CD | | 03/03 ▸ | DE9461480B | **818195** | 537 365 | AL |
| **3 (2003>2006)** | | | | | | | | | |
| **1.4 i 16V** | E | 1349 | MZR14 | +/ R134 | 06/03 ▸ 02/06 | BPYK6148ZA | **814216** | 599 383 | AL |
| **1.6 i 16V** | E | 1598 | MZR16 | +/ R134 | 06/03 ▸ 10/05 | BPYK6148ZA | **814216** | 599 383 | AL |
| **2.0 i 16V** | E | 1999 | MZR20 | +/ R134 | 06/03 ▸ 10/05 | BPYK6148ZA | **814216** | 599 383 | AL |
| **3 (FL) (2006>)** | | | | | | | | | |
| **1.4 i 16V** | E | 1349 | MZR14 | +/ R134 | 03/06 ▸ 12/08 | BP4K61480B | **814265** | 600 378 | AL |
| **1.4 i 16V** | E | 1349 | MZR14 | +/ R134 | 03/06 ▸ 12/08 | BPYK6148ZA | **814216** | 599 383 | AL |
| **1.6 i 16V** | E | 1598 | MZR16 | +/ R134 | 03/06 ▸ 12/08 | BPYK6148ZA | **814216** | 599 383 | AL |
| **1.6 i 16V** | E | 1598 | MZR16 | +/ R134 | 03/06 ▸ 12/08 | BP4K61480B | **814265** | 600 378 | AL |
| **2.0 i 16V** | E | 1999 | MZR20 | +/ R134 | 03/06 ▸ 12/08 | BP4K61480B | **814265** | 600 378 | AL |
| **2.0 i 16V** | E | 1999 | MZR20 | +/ R134 | 03/06 ▸ 12/08 | BPYK6148ZA | **814216** | 599 383 | AL |
| **2.3 i Turbo 16V** | E | 2261 | MZR-DISI TURBO | +/ R134 | 07/06 ▸ | BPYK6148ZA | **814216** | 599 383 | AL |
| **2.3 i Turbo 16V** | E | 2261 | MZR-DISI TURBO | +/ R134 | 07/06 ▸ | BP4K61480B | **814265** | 600 378 | AL |
| **1.6 MZ-CD 16V** | D | 1560 | MZ-CD16,MZ16CD/FAP | +/ R134 | 09/06 ▸ 12/08 | BPYK6148ZA | **814216** | 599 383 | AL |
| **1.6 MZ-CD 16V** | D | 1560 | MZ-CD16,MZ16CD/FAP | +/ R134 | 03/06 ▸ 12/08 | BP4K61480B | **814265** | 600 378 | AL |
| **2.0 MZ-CD 16V** | D | 1998 | MZR-CD20,MZR-CD20/F | +/ R134 | 12/06 ▸ 12/08 | BPYK6148ZA | **814216** | 599 383 | AL |
| **5 (2005>2006)** | | | | | | | | | |
| **1.8 i 16V** | E | 1798 | MZR18 | +/ R134 | 02/05 ▸ 12/07 | BPYK6148ZA | **814216** | 599 383 | AL |
| **2.0 i 16V** | E | 1999 | MZR20 | +/ R134 | 02/05 ▸ 12/07 | BPYK6148ZA | **814216** | 599 383 | AL |
| **2.0 CD 16V** | D | 1998 | MZR-CD20 | +/ R134 | 02/05 ▸ 12/07 | BPYK6148ZA | **814216** | 599 383 | AL |
| **5 (2007>)** | | | | | | | | | |
| **1.8 i 16V** | E | 1798 | MZR18 | +/ R134 | 09/07 ▸ | BPYK6148ZA | **814216** | 599 383 | AL |
| **1.8 i 16V** | E | 1798 | MZR18 | +/ R134 | 09/07 ▸ | BP4K61480B | **814265** | 600 378 | AL |
| **2.0 i 16V** | E | 1999 | MZR20 | +/ R134 | 09/07 ▸ | BP4K61480B | **814265** | 600 378 | AL |
| **2.0 i 16V** | E | 1999 | MZR20 | +/ R134 | 09/07 ▸ | BPYK6148ZA | **814216** | 599 383 | AL |
| **2.0 CD 16V** | D | 1998 | MZR-CD20 | +/ R134 | 09/07 ▸ | BPYK6148ZA | **814216** | 599 383 | AL |
| **2.0 CD 16V** | D | 1998 | MZR-CD20 | +/ R134 | 09/07 ▸ | BP4K61480B | **814265** | 600 378 | AL |
| **6 (2002>2005)** | | | | | | | | | |
| **1.8 i 16V** | E | 1798 | MZR18 | +/ R134 | 02/02 ▸ 02/05 | GJYA6148ZA | **818090** | 650 322 | AL |
| **2.0 i 16V** | E | 1999 | MZR20 | +/ R134 | 02/02 ▸ 02/05 | GJYA6148ZA | **818090** | 650 322 | AL |
| **2.3 i 16V** | E | 2261 | L3 | +/ R134 | 02/02 ▸ 02/05 | GJYA6148ZA | **818090** | 650 322 | AL |
| **2.0 DiTD,2.0 DiTD 16V** | D | 1998 | MZR-CD20,RF-136 | +/ R134 | 06/02 ▸ 02/05 | GJYA6148ZA | **818090** | 650 322 | AL |
| **6 (2005>2006)** | | | | | | | | | |
| **1.8 i 16V** | E | 1798 | MZR18 | +/ R134 | 03/05 ▸ 08/07 | GJYA6148ZA | **818090** | 650 322 | AL |
| **2.0 i 16V** | E | 1999 | MZR20 | +/ R134 | 03/05 ▸ 08/07 | GJYA6148ZA | **818090** | 650 322 | AL |
| **2.3 DISI Turbo,2.3 i 16V** | E | 2261 | L3 | +/ R134 | 10/04 ▸ | GJYA6148ZA | **818090** | 650 322 | AL |
| **2.0 DiTD 16V** | D | 1998 | MZR-CD20 | +/ R134 | 04/05 ▸ 08/07 | GJYA6148ZA | **818090** | 650 322 | AL |
| **6 (2007>2010)** | | | | | | | | | |
| **1.8 MZR 16V** | E | 1798 | MZR18 | +/ R134 | 08/07 ▸ 11/09 | GJYA6148ZA | **818090** | 650 322 | AL |
| **2.0 MZR 16V** | E | 1999 | MZR20 | +/ R134 | 08/07 ▸ 11/09 | GJYA6148ZA | **818090** | 650 322 | AL |
| **2.5 MZR 16V** | E | 2488 | MZR25 | +/ R134 | 08/07 ▸ 11/09 | GJYA6148ZA | **818090** | 650 322 | AL |
| **323 (BF) (85>89)** | | | | | | | | | |
| **1.4 i** | E | 1324 | B3 | | 01/85 ▸ 10/89 | BB7C61480 | **814281** | 550 330 | AL |
| **1.5 i** | E | 1498 | B5 | | 01/85 ▸ 10/89 | BB7C61480 | **814281** | 550 330 | AL |

Condenser Condenseur Kondensator Condensatore Condensor Condensador КОНДЕНСЕР Kondenser Kondenzátor Condensator Συμπυκνωτής



• **New** Nouveau **Nuevo** Novo **Nuovo** Nieuw **Neu** Nowość **Yeni** Новый Νέο **Novy**

| | | CC | | | | OE | Valeo | DIM | TECH |
|---|---|---|---|---|---|---|---|---|---|
| **323 (BF) (85>89) (.../...)** | | | | | | | | | |
| **1.6 i** | E | 1597 | B68, B6 | | 01/85 ▸ 10/89 | BB7C61480 | **814281** | 550 330 | AL |
| **323 (BG) (89>94)** | | | | | | | | | |
| **1.3 i** | E | 1324 | B3E | | 01/89 ▸ 10/94 | BB7C61480 | **814281** | 550 330 | AL |
| **1.6 i** | E | 1598 | B6E | | 01/89 ▸ 10/94 | BB7C61480 | **814281** | 550 330 | AL |
| **1.8 i** | E | 1840 | BP | | 01/89 ▸ 10/94 | BB7C61480 | **814281** | 550 330 | AL |
| **1,7 D** | D | 1720 | PN54 | | 01/89 ▸ 10/94 | BB7C61480 | **814281** | 550 330 | AL |
| **1.3 i** | E | 1324 | B3E | | 09/89 ▸ 07/94 | BR7061480 | **814278** | 548 331 | AL |
| **1.6 i** | E | 1598 | B6E | | 09/89 ▸ 06/91 | BR7061480 | **814278** | 548 331 | AL |
| **1.8 i** | E | 1840 | BP | | 11/91 ▸ 12/93 | BR7061480 | **814278** | 548 331 | AL |
| **1.7 D** | D | 1720 | PN54 | | 08/89 ▸ 07/94 | BR7061480 | **814278** | 548 331 | AL |
| **323 (BA) (94>96)** | | | | | | | | | |
| **1.3 i** | E | 1324 | B3-C9 | | 06/94 ▸ 09/96 | B01W61480F | **814253** | 612 278 | AL |
| **1.5 i** | E | 1489 | Z5 | | 06/94 ▸ 09/96 | B01W61480F | **814253** | 612 278 | AL |
| **1.5 i** | E | 1489 | Z5 | + R134 | 10/94 ▸ 09/96 | B01A61480 | **818084** | 587 298 | AL |
| **1.8 i 16V** | E | 1840 | BP-ZE | + R134 | 08/94 ▸ 09/96 | B01A61480 | **818084** | 587 298 | AL |
| **323 (BA) (96>98)** | | | | | | | | | |
| **1.3 i 16V** | E | 1324 | B3-ME | | 10/96 ▸ 06/98 | BC1M61480A | **814257** | 609 308 | AL |
| **1.3 i 16V** | E | 1324 | B3-ME | | 01/98 ▸ 06/98 | B01W61480F | **814253** | 612 278 | AL |
| **1.5 i 16V** | E | 1489 | Z5-DE | | 01/98 ▸ 06/98 | B01W61480F | **814253** | 612 278 | AL |
| **1.5 i 16V** | E | 1489 | Z5-DE | | 10/96 ▸ 06/98 | BC1M61480A | **814257** | 609 308 | AL |
| **1.6 i** | E | 1598 | B6-DA | | 01/98 ▸ 06/98 | B01W61480F | **814253** | 612 278 | AL |
| **1.6 i** | E | 1598 | B6-DA | | 02/97 ▸ 06/98 | BC1M61480A | **814257** | 609 308 | AL |
| **1.8 i 16V** | E | 1840 | BP-ZE | | 10/96 ▸ 06/98 | BC1M61480A | **814257** | 609 308 | AL |
| **1.8 i 16V** | E | 1840 | BP-ZE | | 01/98 ▸ 06/98 | B01W61480F | **814253** | 612 278 | AL |
| **323 (BJ) (98>2000)** | | | | | | | | | |
| **1.3 i 16V,1.4 i 16V** | E | 1324 | B3-BJ,B3-ME | | 08/98 ▸ 09/00 | B25F61480B | **818087** | 609 308 | AL |
| **1.5 i 16V** | E | 1498 | ZL | | 08/98 ▸ 09/00 | B25F61480B | **818087** | 609 308 | AL |
| **1.8 i 16V** | E | 1840 | FP-18 | | 08/98 ▸ 09/00 | BK2K61480B | **818086** | 602 332 | AL |
| **1.8 i 16V** | E | 1840 | FP-18 | | 08/98 ▸ 09/00 | B25F61480A | **818087** | 609 308 | AL |
| **2.0 DiTD** | D | 1998 | RFT | | 08/98 ▸ 09/00 | BJ3A61480C | **818088** | 414 298 | AL |
| **2.0 Di** | D | 1998 | RF-ID | | 08/98 ▸ 09/00 | B25F61480B | **818087** | 609 308 | AL |
| **323 (BJ) (2000>2003)** | | | | | | | | | |
| **1.3 i 16V** | E | 1324 | B3-ME | | 10/00 ▸ 10/03 | BK2K61480B | **818086** | 602 332 | AL |
| **1.3 i 16V** | E | 1324 | B3-ME | | 10/00 ▸ 10/03 | B25H61480A | **818087** | 609 308 | AL |
| **1.6 i 16V** | E | 1598 | ZM-3 | | 10/00 ▸ 10/03 | BK2K61480B | **818086** | 602 332 | AL |
| **1.6 i 16V** | E | 1598 | ZM-3 | | 10/00 ▸ 10/03 | B25P61480A | **818087** | 609 308 | AL |
| **2.0 i 16V** | E | 1991 | FS-7 | | 10/00 ▸ 10/03 | BK2K61480B | **818086** | 602 332 | AL |
| **2.0 i 16V** | E | 1991 | FS-7 | | 10/00 ▸ 10/03 | B25F61480B | **818087** | 609 308 | AL |
| **2.0 DiTD 16V** | D | 1998 | RFT-DI-100 | | 10/00 ▸ 10/03 | B25H61480 | **818087** | 609 308 | AL |
| **2.0 DiTD 16V** | D | 1998 | RFT-DI-100 | | 10/00 ▸ 10/03 | BJ3A61480A | **818088** | 414 298 | AL |
| **626 (GD) (87>92)** | | | | | | | | | |
| **1.8 i 16V** | E | 1789 | F8 | | 11/87 ▸ 05/92 | GJ5161480B | **814274** | 553 331 | AL |
| **2.0 i 16V** | E | 1984 | FE | | 11/87 ▸ 05/92 | GJ5161480B | **814274** | 553 331 | AL |
| **626 (GE) (91>97)** | | | | | | | | | |
| **1.8 i 16V** | E | 1840 | FP-01,FP-16 | | 08/91 ▸ 05/97 | GA7H61480 | **814254** | 544 308 | AL |
| **2.0 i 16V** | E | 1991 | FS-31,FS-83,FS-84 | | 08/91 ▸ 05/97 | GA7H61480 | **814254** | 544 308 | AL |
| **2.5 i** | E | 2497 | KL-21,KL-22 | | 09/91 ▸ 05/97 | GA7H61480 | **814254** | 544 308 | AL |
| **626 (GF) (97>99)** | | | | | | | | | |
| **1.8 i 16V** | E | 1840 | FP | | 06/97 ▸ 09/99 | GE4T61480B | **818085** | 550 368 | AL |
| **2.0 i 16V** | E | 1991 | FS-115,FS-136 | | 06/97 ▸ 09/99 | GE4T61480B | **818085** | 550 368 | AL |
| **2.0 DiTD 16V** | D | 1998 | RFT-DI-100,RFT-DI-90 | | 07/98 ▸ 09/99 | GE4T61480B | **818085** | 550 368 | AL |
| **626 (GF) (99>2002)** | | | | | | | | | |
| **1.8 i 16V** | E | 1840 | FP | | 10/99 ▸ | GE4T61480B | **818085** | 550 368 | AL |
| **2.0 i 16V** | E | 1991 | FS-115,FS-136 | | 06/00 ▸ | GE4T61480B | **818085** | 550 368 | AL |
| **2.0 DiTD 16V** | D | 1998 | RFT-DI-100<br>RFT-DI-110,RFT-DI-90 | | 10/99 ▸ | GE4T61480B | **818085** | 550 368 | AL |

| | | CC | | | | OE | Valeo | DIM | TECH |
|---|---|---|---|---|---|---|---|---|---|
| **MAZDA** (.../...) | | | | | | | | | |
| **626 (GW) (97>99)** | | | | | | | | | |
| **1.8 i 16V** | E | 1840 | FP | | 11/97 ▸ 09/99 | GE4T61480B | **818085** | 550 368 | AL |
| **2.0 i 16V** | E | 1991 | FS-115,FS-136 | | 11/97 ▸ 09/99 | GE4T61480B | **818085** | 550 368 | AL |
| **2.0 DiTD 16V** | D | 1998 | RFT-DI-100<br>RFT-DI-110,RFT-DI-90 | | 07/98 ▸ 09/99 | GE4T61480B | **818085** | 550 368 | AL |
| **626 (GW) (99>2002)** | | | | | | | | | |
| **1.8 i 16V** | E | 1840 | FP | | 10/99 ▸ | GE4T61480B | **818085** | 550 368 | AL |
| **2.0 i 16V** | E | 1991 | FS-115,FS-136 | | 06/00 ▸ | GE4T61480B | **818085** | 550 368 | AL |
| **2.0 DiTD 16V** | D | 1998 | RFT-DI-110 | | 10/99 ▸ | GE4T61480B | **818085** | 550 368 | AL |
| **CX-7 (2007>)** | | | | | | | | | |
| **2.3 i Turbo 16V** | E | 2261 | MZR-DISI TURBO | +/ R134 | 03/09 ▸ 09/09 | EH4461480A | **814235** | 675 397 | AL |
| **CX-7 (2009>)** | | | | | | | | | |
| **2.3 i Turbo 16V** | E | 2261 | MZR-DISI TURBO | +/ R134 | 06/09 ▸ | EH4461480A | **814235** | 675 397 | AL |
| **2.2 CDVi 16V** | D | 2184 | MZR-CD22/F | +/ R134 | 09/09 ▸ | EH4461480A | **814235** | 675 397 | AL |
| **DEMIO** | | | | | | | | | |
| **1.3 i** | E | 1324 | B3-2E,B3-2EL,B3-2ELP<br>B3-2EN | | 10/98 ▸ 03/03 | D20161480B | **814258** | 298 328 | AL |
| **MPV** | | | | | | | | | |
| **2.3 i 16V** | E | 2261 | L3 | +/ R134 | 03/02 ▸ 04/05 | LD4761480 | **814266** | 634 438 | AL |
| **2.3 i 16V** | E | 2261 | L3 | +/ R134 | 03/02 ▸ 04/05 | LD4761480A | **814239** | 670 465 | AL |
| **3.0 i V6** | E | 2967 | AJ-200 | +/ R134 | 03/02 ▸ 05/06 | LD4761480A | **814239** | 670 465 | AL |
| **2.0 DiTD** | D | 1998 | RF-136 | +/ R134 | 03/02 ▸ 04/05 | LD4761480A | **814239** | 670 465 | AL |
| **2.0 DiTD** | D | 1998 | RF-136 | +/ R134 | 03/02 ▸ 04/05 | LD4761480 | **814266** | 634 438 | AL |
| **MX5 (2005>)** | | | | | | | | | |
| **1.8 i 16V** | E | 1798 | MZR18 | +/ R134 | 03/05 ▸ | NE5161480C | **814227** | 594 332 | AL |
| **2.0 i 16V** | E | 1999 | MZR20 | +/ R134 | 03/05 ▸ | NE5161480C | **814227** | 594 332 | AL |
| **MX6** | | | | | | | | | |
| **2.0 i** | E | 1991 | FS-19 | | 07/91 ▸ | GA5R61480A | **814251** | 552 338 | AL |
| **2.5 i V6** | E | 2497 | KL-19,KL-20 | | 07/91 ▸ | GA5R61480A | **814251** | 552 338 | AL |
| **PREMACY (99>2001)** | | | | | | | | | |
| **1.8 i 16V** | E | 1840 | FP,FP-18 | | 06/99 ▸ 06/01 | C10061480 | **818092** | 605 338 | AL |
| **2.0 DiTD** | D | 1998 | RFT | | 06/99 ▸ 06/01 | CB0561480B | **814316** | 414 338 | AL |
| **PREMACY (2001>)** | | | | | | | | | |
| **1.8 i 16V** | E | 1840 | FP-E1 | | 07/01 ▸ 08/05 | C10061480B | **818092** | 605 338 | AL |
| **2.0 i 16V** | E | 1991 | FS-7E,FS-7G | | 07/01 ▸ 08/05 | C10061480B | **818092** | 605 338 | AL |
| **2.0 DiTD 16V** | D | 1998 | RF-4F | | 07/01 ▸ 08/03 | CB0561480B | **814316** | 414 338 | AL |
| **RX8 (2003>)** | | | | | | | | | |
| **1.3 i** | E | 2616 | 13B-MSP | +/ R134 | 02/03 ▸ | F15161480 | **814215** | 606 320 | AL |
| **MCC** | | | | | | | | | |
| **SMART - FOR TWO** | | | | | | | | | |
| **0.6 i** | E | 599 | MCC01, MCC01D3<br>MCC02, MCC02D3 | +/ R134 | 10/98 ▸ | 0001632V003 | **817801** | 380 330 | AL |
| **0.7 i** | E | 698 | M160/1, 160921 | +/ R134 | 02/03 ▸ | 0001632V003 | **817801** | 380 330 | AL |
| **0.8 CDI** | D | 799 | 660.940 | +/ R134 | 09/99 ▸ | 0001632V003 | **817801** | 380 330 | AL |
| **MERCEDES** | | | | | | | | | |
| **190 (201)** | | | | | | | | | |
| **2.0 D** ▸ A001329 | D | 1997 | 601.911 | R12>R134a | 12/83 ▸ | 2018300370 | **816949** | 580 330 | AL |
| **A CLASS (168) (97>2003)** | | | | | | | | | |
| **A140 i** | E | 1397 | 166.940 | +/ R134 | 05/97 ▸ 05/01 | 1685000454 | **817504** | 538 381 | AL |
| **A140 i** | E | 1397 | 166.940 | +/ R134 | 06/01 ▸ | 1685000854 | **817659** | 538 381 | AL |
| **A160 i** | E | 1598 | 166.960 | +/ R134 | 05/97 ▸ 05/01 | 1685000454 | **817504** | 538 381 | AL |

Condenser Condenseur Kondensator Condensatore Condensor Condensador КОНДЕНСЕР Kondenser Kondenzátor Condensator Συμπυκνωτής



• **New** Nouveau **Nuevo** Novo **Nuovo** Nieuw **Neu** Nowość **Yeni** Новый Νέο **Novy**

## A CLASS (168) (97>2003) (.../...)

| | | CC | | | | OE | Valeo | DIM | TECH |
|---|---|---|---|---|---|---|---|---|---|
| **A160 i** | E | 1598 | 166.960 | R134 | 06/01 ▸ | 1685001154 | **817659** | 538 381 | AL |
| **A190 i** | E | 1898 | 166.990 | R134 | 04/99 ▸ 05/01 | 1685000454 | **817504** | 538 381 | AL |
| **A190 i** | E | 1898 | 166.990 | R134 | 06/01 ▸ | 1685000854 | **817659** | 538 381 | AL |
| **A210 i** | E | 2084 | 166.995 | R134 | 01/02 ▸ | 1685000454 | **817504** | 538 381 | AL |
| **A210 i** | E | 2084 | 166.995 | R134 | 01/02 ▸ | 1685001154 | **817659** | 538 381 | AL |
| **A160CDI, A170CDI** | D | 1689 | 668,94, 668941<br>668942 | R134 | 05/98 ▸ 05/01 | 1685000454 | **817504** | 538 381 | AL |
| **A160CDI, A170CDI** | D | 1689 | 668,94, 668941<br>668942 | R134 | 06/01 ▸ | 1685001154 | **817659** | 538 381 | AL |

## C CLASS (202) (93>2001)

| | | | | | | | | | |
|---|---|---|---|---|---|---|---|---|---|
| **C180 i**<br>▸ F483847 | E | 1799 | 111,92, 111921 | | 03/93 ▸ | 2028300870 | **816900** | 570 400 | AL |
| **C180 i**<br>A436436 ▸ | E | 1799 | 111.920 | | 03/93 ▸ 03/00 | 2028300970 | **817562** | 595 411 | AL |
| **C200 i**<br>A436436 ▸ | E | 1998 | 111.941 | | 03/93 ▸ 03/00 | 2028300970 | **817562** | 595 411 | AL |
| **C200 i, C200K** | E | 1998 | 111941, 111.944/5 | | 01/94 ▸ 02/01 | 2028300870 | **816900** | 570 400 | AL |
| **C220 i** | E | 2199 | 111.961 | | 03/93 ▸ 03/00 | 2028300870 | **816900** | 570 400 | AL |
| **C230 i**<br>A436436 ▸ | E | 2295 | 111.974 | | 08/95 ▸ 03/00 | 2028300970 | **817562** | 595 411 | AL |
| **C230 i** | E | 2295 | 111.974 | | 08/95 ▸ 02/01 | 2028300870 | **816900** | 570 400 | AL |
| **C230K** | E | 2295 | 111.975 | + support | 09/95 ▸ 03/00 | 2028300770 | **817492** | 595 411 | AL |
| **C240 i** | E | 2398 | 112.910 | | 06/97 ▸ 06/98 | 2028300870 | **816900** | 570 400 | AL |
| **C240 i** | E | 2398 | 112.910 | | 06/98 ▸ 03/00 | 2028300970 | **817562** | 595 411 | AL |
| **C280 i** | E | 2799 | 104.941 | | 05/93 ▸ 03/00 | 2028300870 | **816900** | 570 400 | AL |
| **C36 AMG** | E | 3606 | C36AMG | | 09/94 ▸ 03/00 | 2028300870 | **816900** | 570 400 | AL |
| **C43 AMG** | E | 4266 | 113.944 | | 10/97 ▸ 03/00 | 2028300870 | **816900** | 570 400 | AL |
| **C200D** | D | 1997 | 601.913 | | 03/93 ▸ 03/00 | 2028300870 | **816900** | 570 400 | AL |
| **C200D** | D | 1998 | 604.915 | | 03/93 ▸ 02/01 | 2028300870 | **816900** | 570 400 | AL |
| **C200CDI** | D | 2151 | 611.960A | + support | 07/98 ▸ 03/00 | 2028300770 | **817492** | 595 411 | AL |
| **C200CDI, C220 CDI** | D | 2151 | 611.960 | | 07/98 ▸ 02/01 | 2028301070 | **817563** | 595 411 | AL |
| **C220D** | D | 2155 | 604.910 | | 08/93 ▸ 02/01 | 2028300870 | **816900** | 570 400 | AL |
| **C250D** | D | 2497 | 605.910 | | 05/93 ▸ 03/00 | 2028300870 | **816900** | 570 400 | AL |
| **C250TD** | D | 2497 | 605.960 | + support | 09/95 ▸ 02/01 | 2028300770 | **817492** | 595 411 | AL |

## C CLASS (203) (2000>2003)

| | | | | | | | | | |
|---|---|---|---|---|---|---|---|---|---|
| **C180, C200, C200CGI, C230** | E | 1796 | 271,94, 271942<br>271946, 271948 | R134 | 06/02 ▸ | 2035000554 | **817848** | 648 371 | AL |
| **C180, C200** | E | 1998 | 111951, 111955 | R134 | 04/00 ▸ | 2035000554 | **817848** | 648 371 | AL |
| **C200** | E | 2295 | 111.981 | R134 | 09/00 ▸ 12/03 | 2035000554 | **817848** | 648 371 | AL |
| **C240** | E | 2597 | 112912, 112916 | R134 | 04/00 ▸ | 2035000554 | **817848** | 648 371 | AL |
| **C32K, C320** | E | 3199 | 112946, 112953<br>112961 | R134 | 04/00 ▸ | 2035000554 | **817848** | 648 371 | AL |
| **C200CDI, C220CDI** | D | 2148 | 611962, 646.962/3 | R134 | 04/00 ▸ | 2035001354 | **817849** | 648 371 | AL |
| **C270CDI** | D | 2685 | 612.962 | R134 | 08/00 ▸ | 2035001354 | **817849** | 648 371 | AL |
| **C30CDI** | D | 2950 | 612.990 | R134 | 09/02 ▸ | 2035001354 | **817849** | 648 371 | AL |

## C CLASS (203) (2004>)

| | | | | | | | | | |
|---|---|---|---|---|---|---|---|---|---|
| **C270CDI** | D | 2685 | 612.962 | R134 | 01/04 ▸ 07/05 | 2035001354 | **817849** | 648 371 | AL |
| **C30CDI** | D | 2950 | 612.990 | R134 | 01/04 ▸ | 2035001354 | **817849** | 648 371 | AL |
| **C320CDI** | D | 2987 | 642.910 | R134 | 07/05 ▸ | 2035001354 | **817849** | 648 371 | AL |

## CLK (208)

| | | | | | | | | | |
|---|---|---|---|---|---|---|---|---|---|
| **CLK200 i, CLK200K i** | E | 1998 | 111.944/5, 111956 | | 06/97 ▸ | 2028300970 | **817562** | 595 411 | AL |
| **CLK230K i** | E | 2295 | 111975, 111982 | | 06/97 ▸ | 2028300970 | **817562** | 595 411 | AL |
| **CLK320 i** | E | 3199 | 112.940 | | 06/97 ▸ | 2028300970 | **817562** | 595 411 | AL |
| **CLK430 i** | E | 4266 | 113.943 | | 06/98 ▸ | 2028300970 | **817562** | 595 411 | AL |
| **CLK55 AMG i** | E | 5439 | 113.984 | | 06/99 ▸ 06/02 | 2028300970 | **817562** | 595 411 | AL |

## CLS (2004>2010)

| | | | | | | | | | |
|---|---|---|---|---|---|---|---|---|---|
| **CLS350 i** | E | 3498 | 272.964,272.985 | R134 | 07/04 ▸ 01/08 | 2115001154 | **818003** | 593 437 | AL |
| **CLS500 i** | E | 4966 | 113.967 | R134 | 07/04 ▸ 01/08 | 2115000154 | **818003** | 593 437 | AL |
| **CLS55 i** | E | 5439 | 113.990 | R134 | 01/05 ▸ 01/08 | 2115001154 | **818003** | 593 437 | AL |
| **CLS 320CDI CDI** | D | 2987 | 642.920 | R134 | 06/05 ▸ 01/08 | 2115001154 | **818003** | 593 437 | AL |

## CLS (218) (2010>)

| | | | | | | | | | |
|---|---|---|---|---|---|---|---|---|---|
| **4.7 ti V8-408 32V** | E | 4663 | 278.922 | R134 | 01/11 ▸ | 2115001154 | **818003** | 593 437 | AL |

# MERCEDES (.../...)

## E CLASS (210)

| | | CC | | | | OE | Valeo | DIM | TECH |
|---|---|---|---|---|---|---|---|---|---|
| **E200 i** ▸ 394035 | E | 1998 | 111.942 | | 04/95 ▸ 06/99 | 2028300870 | **816900** | 570 400 | AL |
| **E200 i** | E | 1998 | 111.942 | | 04/95 ▸ 03/03 | 2108300570 | **817252** | 620 481 | AL |
| **E200 i, E200L i** | E | 1998 | 111947, 111957 | R12>R134a | 04/95 ▸ 03/03 | 2108300370 | **816949** | 580 330 | AL |
| **E200 i** | E | 1998 | 111.942 | | 06/99 ▸ 03/03 | 2028300970 | **817562** | 595 411 | AL |
| **E230 i** ▸ 394035 | E | 2295 | 111.970 | | 04/95 ▸ 06/99 | 2028300870 | **816900** | 570 400 | AL |
| **E230 i** 394036 ▸ | E | 2295 | 111.970 | | 04/95 ▸ 06/99 | 2028300970 | **817562** | 595 411 | AL |
| **E230 i** | E | 2295 | 111.970 | | 04/95 ▸ 06/99 | 2108300570 | **817252** | 620 481 | AL |
| **E240 i** | E | 2398 | 112.911 | | 04/95 ▸ 03/03 | 2108300570 | **817252** | 620 481 | AL |
| **E240 i** | E | 2597 | 112.914 | | 05/00 ▸ 03/03 | 2108300570 | **817252** | 620 481 | AL |
| **E280 i, E280L i** | E | 2799 | 104945, 112921 | | 04/95 ▸ 03/03 | 2108300570 | **817252** | 620 481 | AL |
| **E320 i** | E | 3199 | 104995, 112941 | | 04/95 ▸ 03/03 | 2108300570 | **817252** | 620 481 | AL |
| **E420 i** | E | 4196 | 119.985 | | 04/95 ▸ 06/99 | 2108300570 | **817252** | 620 481 | AL |
| **E430 i** | E | 4266 | 113.940 | | 03/96 ▸ 03/03 | 2108300570 | **817252** | 620 481 | AL |
| **E50 AMG i** | E | 4973 | 119.AMG | | 03/96 ▸ 06/99 | 2108300570 | **817252** | 620 481 | AL |
| **E55 AMG i** | E | 5439 | 113.980 | | 03/96 ▸ 03/02 | 2108300570 | **817252** | 620 481 | AL |
| **E200D** | D | 1998 | 604.917 | | 04/95 ▸ 06/99 | 2108300570 | **817252** | 620 481 | AL |
| **E200CDI, E220CDI** | D | 2148 | 611.961 | R12>R134a | 03/96 ▸ 03/03 | 2108300370 | **816949** | 580 330 | AL |
| **E220D** | D | 2155 | 604.912 | | 04/95 ▸ 06/99 | 2108300570 | **817252** | 620 481 | AL |
| **E250D, E250DL** | D | 2497 | 605.912 | | 04/95 ▸ 06/99 | 2108300570 | **817252** | 620 481 | AL |
| **E250TD** | D | 2497 | 605.962 | | 04/95 ▸ 06/99 | 2108300470 | **817235** | 600 319 | AL |
| **E270CDI** | D | 2685 | 612.961 | | 06/99 ▸ 03/03 | 2108300470 | **817235** | 600 319 | AL |
| **E290TD, E290TDL** | D | 2874 | 602.982 | R12>R134a | 04/95 ▸ 06/99 | 2108300370 | **816949** | 580 330 | AL |
| **E300D** | D | 2996 | 606.912 | | 04/95 ▸ 06/99 | 2108300570 | **817252** | 620 481 | AL |
| **E300TD** | D | 2996 | 606.962 | | 04/95 ▸ 06/99 | 2108300470 | **817235** | 600 319 | AL |
| **E320CDI** | D | 3224 | 613.961 | | 06/99 ▸ 03/03 | 2108300470 | **817235** | 600 319 | AL |

## E CLASS (211)

| | | | | | | | | | |
|---|---|---|---|---|---|---|---|---|---|
| **E 200 i** | E | 1796 | 271.941 | +/ R134 | 09/02 ▸ | 2115001254 | **818003** | 593 437 | AL |
| **E 240 i** | E | 2597 | 112913, 112917 | +/ R134 | 03/02 ▸ 06/05 | 2115001254 | **818003** | 593 437 | AL |
| **E 320 i** | E | 3199 | 112949, 112954 | +/ R134 | 03/02 ▸ | 2115001254 | **818003** | 593 437 | AL |
| **E 350 i** | E | 3498 | 272964, 272972 | +/ R134 | 07/04 ▸ | 2115001254 | **818003** | 593 437 | AL |
| **E 500 i** | E | 4966 | 113967, 113969 | +/ R134 | 03/02 ▸ | 2115001254 | **818003** | 593 437 | AL |
| **E 55 AMG i** | E | 5439 | 113.990 | +/ R134 | 07/02 ▸ | 2115001254 | **818003** | 593 437 | AL |
| **E 200 CDI, E 220 CDI** | D | 2148 | 646951, 646961 | +/ R134 | 03/02 ▸ | 2115001254 | **818003** | 593 437 | AL |
| **E 270 CDI** | D | 2685 | 647.961 | +/ R134 | 03/02 ▸ 05/05 | 2115001254 | **818003** | 593 437 | AL |
| **E 280 CDI, E 320 CDI** | D | 3222 | 648.961 | +/ R134 | 03/02 ▸ 05/05 | 2115001254 | **818003** | 593 437 | AL |
| **E 400 CDI, E 420 CDI** | D | 3996 | 628961, 629,91 | +/ R134 | 03/04 ▸ | 2115001254 | **818003** | 593 437 | AL |

## M CLASS (163)

| | | | | | | | | | |
|---|---|---|---|---|---|---|---|---|---|
| **ML230 i** | E | 2295 | 111.977 | | 10/97 ▸ | 1638300170 | **817458** | 518 531 | AL |
| **ML320 i** | E | 3199 | 112.942 | | 05/97 ▸ 08/02 | 1638300170 | **817458** | 518 531 | AL |
| **ML350 i** | E | 3724 | 112.970 | | 09/00 ▸ | 1638300170 | **817458** | 518 531 | AL |
| **ML430 i** | E | 4266 | 113.942 | | 03/98 ▸ | 1638300170 | **817458** | 518 531 | AL |
| **ML500 i** | E | 4966 | 113.965 | | 09/00 ▸ | 1638300170 | **817458** | 518 531 | AL |
| **ML55 AMG i** | E | 5439 | 113.981 | | 09/99 ▸ | 1638300370 | **817446** | 535 521 | AL |
| **ML270CDI** | D | 2668 | 612.963 | | 07/99 ▸ | 1638300170 | **817458** | 518 531 | AL |
| **ML400CDI** | D | 3996 | 628.963 | | 09/00 ▸ | 1638300370 | **817446** | 535 521 | AL |

## S CLASS (220)

| | | | | | | | | | |
|---|---|---|---|---|---|---|---|---|---|
| **S280 i** | E | 2799 | 112.922 | +/ R134 | 03/99 ▸ | 2205000054 | **818003** | 593 437 | AL |
| **S320 i, S320L i** | E | 3199 | 112.944 | +/ R134 | 09/98 ▸ | 2205000054 | **818003** | 593 437 | AL |
| **S430 i, S430L i** | E | 4266 | 113.941 | +/ R134 | 09/98 ▸ | 2205000054 | **818003** | 593 437 | AL |
| **S500 i, S500L i** | E | 4966 | 113.960 | +/ R134 | 09/98 ▸ | 2205000054 | **818003** | 593 437 | AL |

## SLK (R170)

| | | | | | | | | | |
|---|---|---|---|---|---|---|---|---|---|
| **SLK200 i, SLK200K i** | E | 1998 | 111943, 111946 | | 08/96 ▸ 03/00 | 2028300970 | **817562** | 595 411 | AL |
| **SLK230K i** | E | 2295 | 111.973 | | 08/96 ▸ 03/00 | 2028300970 | **817562** | 595 411 | AL |

## SLK (171)

| | | | | | | | | | |
|---|---|---|---|---|---|---|---|---|---|
| **3.0 i V6 24V** | E | 2996 | 272.940 | | 04/06 ▸ 12/07 | 1715000154 | **814186** | 668 371 | |
| **3.0 i V6 24V** | E | 2996 | 272.942 | | 01/08 ▸ | 1715000154 | **814186** | 668 371 | |
| **3.5 i V6 24V** | E | 3498 | 272.969 | | 01/08 ▸ | 1715000154 | **814186** | 668 371 | |

## V CLASS (638/2)

| | | | | | | | | | |
|---|---|---|---|---|---|---|---|---|---|
| **V200** | E | 1998 | 111.948 | | 10/96 ▸ 12/02 | 6388350170 | **817011** | 490 550 | AL |

Condenser Condenseur Kondensator Condensatore Condensor Condensador ΚΟΝΔΕΝΣΕΡ Kondenser Kondenzátor Condensator Συμπυκνωτής



• **New** Nouveau **Nuevo** Novo **Nuovo** Nieuw **Neu** Nowość **Yeni** Новый Νέο **Novy**

| | | CC | | | | OE | Valeo | DIM | TECH |
|---|---|---|---|---|---|---|---|---|---|
| **MERCEDES (.../...)** | | | | | | | | | |
| **V CLASS (638/2) (.../...)** | | | | | | | | | |
| **V230** | E | 2295 | 111.978 | | 10/96 ▸ 12/02 | 6388350170 | **817011** | 490 550 | AL |
| **V280** | E | 2799 | 104.900 | | 10/96 ▸ 12/02 | 6388350170 | **817011** | 490 550 | AL |
| **V220 CDI, V200 CDI** | D | 2151 | 611.980 | | 01/99 ▸ 12/02 | 6388350170 | **817011** | 490 550 | AL |
| **V230TD** | D | 2299 | 601.970 | | 10/96 ▸ 12/02 | 6388350170 | **817011** | 490 550 | AL |
| **VANEO (414)** | | | | | | | | | |
| **1.6 i** | E | 1598 | 166961, 166,82 | R134 | 10/01 ▸ | 4145000054 | **817841** | 538 381 | AL |
| **1.9 i** | E | 1898 | 166.991 | R134 | 10/01 ▸ | 4145000054 | **817841** | 538 381 | AL |
| **1.7 CDI** | D | 1689 | 668.914 | R134 | 10/01 ▸ | 4145000054 | **817841** | 538 381 | AL |
| **MERCEDES** | | | | | | | | | |
| **SPRINTER (95>2006)** | | | | | | | | | |
| **2.3 i** | E | 2295 | 111.979 | | 02/95 ▸ 01/06 | 9015000554 | **816891** | 630 376 | AL |
| **2.3 D** | D | 2299 | 601.943 | | 02/95 ▸ 01/06 | 9015000554 | **816891** | 630 376 | AL |
| **2.9 D** | D | 2874 | 602.980 | | 02/95 ▸ 01/06 | 9015000554 | **816891** | 630 376 | AL |
| **SPRINTER (2006>)** | | | | | | | | | |
| **3.5 i** | E | 3498 | 272.979 | R134 | 02/06 ▸ | 9065000054 | **818173** | 679 461 | AL |
| **2.2 D** | D | 2148 | 646.984 | R134 | 02/06 ▸ | 9065000054 | **818173** | 679 461 | AL |
| **3.0 D** | D | 2987 | 642.992 | R134 | 02/06 ▸ | 9065000054 | **818173** | 679 461 | AL |
| **VIANO** | | | | | | | | | |
| **3.2 i** | E | 3199 | 112.951 | R134 | 01/03 ▸ | 6398350070 | **817842** | 658 391 | AL |
| **3.7 i** | E | 3724 | 112.976 | R134 | 06/04 ▸ | 6398350070 | **817842** | 658 391 | AL |
| **2.0 CDI, 2.2 CDI** | D | 2148 | 646.982 | R134 | 01/03 ▸ | 6398350070 | **817842** | 658 391 | AL |
| **VITO (96>2003)** | | | | | | | | | |
| **2.0 i** | E | 1998 | 111.948 | | 01/96 ▸ 09/03 | 6388350170 | **817011** | 490 550 | AL |
| **2.2 CDI** | D | 2151 | 611.980 | | 03/99 ▸ 09/03 | 6388350170 | **817011** | 490 550 | AL |
| **2.3 D, 2.3 TD** | D | 2299 | 601942, 601,97 | | 01/96 ▸ 09/03 | 6388350170 | **817011** | 490 550 | AL |
| **VITO (2003>)** | | | | | | | | | |
| **3.2 i** | E | 3199 | 112.951 | R134 | 01/03 ▸ | 6398350070 | **817842** | 658 391 | AL |
| **3.7 i** | E | 3724 | 112.976 | R134 | 06/04 ▸ | 6398350070 | **817842** | 658 391 | AL |
| **2.2 CDI** | D | 2148 | 646982, 646983 | R134 | 01/03 ▸ | 6398350070 | **817842** | 658 391 | AL |
| **MERCEDES** | | | | | | | | | |
| **ACTROS 1996** | | | | | | | | | |
| **1843 AK / L / LS / S** | D | 11946 | OM 541 | | 09/96 ▸ 10/02 | 9425000054 | **818034** | 686 458 | AL |
| **1843 AK / L / LS / S** | D | 11946 | OM 541 | | 09/96 ▸ 10/02 | 9425000054 | **818034** | 686 458 | AL |
| **1848 AK / K / L / LS / S** | D | 15928 | OM 542 | | 09/96 ▸ 10/02 | 9425000054 | **818034** | 686 458 | AL |
| **1853 L / LS / S** | D | 15928 | OM 542 | | 09/96 ▸ 10/02 | 9425000054 | **818034** | 686 458 | AL |
| **1853 L / LS / S** | D | 15928 | OM 542 | | 09/96 ▸ 10/02 | 9425000054 | **818034** | 686 458 | AL |
| **1857 L / LS** | D | 15928 | OM 542 | | 09/96 ▸ 10/02 | 9425000054 | **818034** | 686 458 | AL |
| **2543 L / LS** | D | 11946 | OM 541 | | 09/96 ▸ 10/02 | 9425000054 | **818034** | 686 458 | AL |
| **2543 L / LS** | D | 11946 | OM 541 | | 09/96 ▸ 10/02 | 9425000054 | **818034** | 686 458 | AL |
| **2548 L / LS** | D | 15928 | OM 542 | | 09/96 ▸ 10/02 | 9425000054 | **818034** | 686 458 | AL |
| **2553 L / LS** | D | 15928 | OM 542 | | 09/96 ▸ 10/02 | 9425000054 | **818034** | 686 458 | AL |
| **2553 L / LS** | D | 15928 | OM 542 | | 09/96 ▸ 10/02 | 9425000054 | **818034** | 686 458 | AL |
| **2557 LS** | D | 15928 | OM 542 | | 09/96 ▸ 10/02 | 9425000054 | **818034** | 686 458 | AL |
| **2643 K / L / LK / LS / S** | D | 11946 | OM 541 | | 04/97 ▸ 10/02 | 9425000054 | **818034** | 686 458 | AL |
| **2643 K / L / LK / LS / S** | D | 11946 | OM 541 | | 04/97 ▸ 10/02 | 9425000054 | **818034** | 686 458 | AL |
| **2648 K / L / LK / LS / S** | D | 15928 | OM 542 | | 09/96 ▸ 10/02 | 9425000054 | **818034** | 686 458 | AL |
| **2653 K / L / LK / LS / S** | D | 15928 | OM 542 | | 09/96 ▸ 10/02 | 9425000054 | **818034** | 686 458 | AL |
| **2653 K / L / LK / LS / S** | D | 15928 | OM 542 | | 09/96 ▸ 10/02 | 9425000054 | **818034** | 686 458 | AL |
| **2657 K / L / LK / LS** | D | 15928 | OM 542 | | 09/96 ▸ 10/02 | 9425000054 | **818034** | 686 458 | AL |
| **3243 B / K** | D | 11946 | OM 541 | | 04/97 ▸ 10/02 | 9425000054 | **818034** | 686 458 | AL |
| **3243 B / K** | D | 11946 | OM 541 | | 04/97 ▸ 10/02 | 9425000054 | **818034** | 686 458 | AL |
| **3343 AK / AS / K / S** | D | 11946 | OM 541 | | 04/97 ▸ 10/02 | 9425000054 | **818034** | 686 458 | AL |
| **3343 AK / AS / K / S** | D | 11946 | OM 541 | | 04/97 ▸ 10/02 | 9425000054 | **818034** | 686 458 | AL |
| **3348 K / S** | D | 15928 | OM 542 | | 09/96 ▸ 10/02 | 9425000054 | **818034** | 686 458 | AL |
| **3353 S** | D | 11946 | OM 542 | | 09/96 ▸ 10/02 | 9425000054 | **818034** | 686 458 | AL |
| **3353 S** | D | 11946 | OM 542 | | 09/96 ▸ 10/02 | 9425000054 | **818034** | 686 458 | AL |
| **3357** | D | 11946 | OM 542 | | 09/96 ▸ 10/02 | 9425000054 | **818034** | 686 458 | AL |
| **3357** | D | 11946 | OM 542 | | 09/96 ▸ 10/02 | 9425000054 | **818034** | 686 458 | AL |
| **4143 AK / K** | D | 11946 | OM 541 | | 04/97 ▸ 10/02 | 9425000054 | **818034** | 686 458 | AL |

| | | CC | | | | OE | Valeo | DIM | TECH |
|---|---|---|---|---|---|---|---|---|---|
| **MERCEDES** (.../...) | | | | | | | | | |
| **ACTROS 1996 (.../...)** | | | | | | | | | |
| **4143 AK / K** | D | 11946 | OM 541 | | 04/97 ▸ 10/02 | 9425000054 | **818034** | 686 458 | AL |
| **ACTROS 1997** | | | | | | | | | |
| **2032 AK** | D | 11946 | OM 541 | | 04/03 ▸ | 9425000154 | **818034** | 686 458 | AL |
| **3348 K / S** | D | 15928 | OM 542 | | 04/03 ▸ | 9425000154 | **818034** | 686 458 | AL |
| **ATEGO I** | | | | | | | | | |
| **1017 A / AK / L** | D | 4250 | OM 904LA | | 09/97 ▸ | 9705000054 | **818035** | 500 537 | |
| **1017 A / AK / L** | D | 4250 | OM 904LA | | 09/97 ▸ | 9705000054 | **818035** | 500 537 | |
| **1215 K / L** | D | 4250 | OM 904LA | | 09/97 ▸ | 9705000054 | **818035** | 500 537 | |
| **1215 K / L** | D | 4250 | OM 904LA | | 09/97 ▸ | 9705000054 | **818035** | 500 537 | |
| **1217 K / KO / L** | D | 4250 | OM 904LA | | 09/97 ▸ | 9705000054 | **818035** | 500 537 | |
| **1217 K / KO / L** | D | 4250 | OM 904LA | | 09/97 ▸ | 9705000054 | **818035** | 500 537 | |
| **1317 A / AK / KO / L** | D | 4250 | OM 904LA | | 09/97 ▸ | 9705000054 | **818035** | 500 537 | |
| **1317 A / AK / KO / L** | D | 4250 | OM 904LA | | 09/97 ▸ | 9705000054 | **818035** | 500 537 | |
| **1517 A / K / L** | D | 4250 | OM 904LA | | 09/97 ▸ | 9705000054 | **818035** | 500 537 | |
| **1517 A / K / L** | D | 4250 | OM 904LA | | 09/97 ▸ | 9705000054 | **818035** | 500 537 | |
| **712** | D | 4250 | OM 904LA | | 09/97 ▸ | 9705000054 | **818035** | 500 537 | |
| **712** | D | 4250 | OM 904LA | | 09/97 ▸ | 9705000054 | **818035** | 500 537 | |
| **715 L** | D | 4250 | OM 904LA | | 09/97 ▸ | 9705000054 | **818035** | 500 537 | |
| **715 L** | D | 4250 | OM 904LA | | 09/97 ▸ | 9705000054 | **818035** | 500 537 | |
| **812** | D | 4250 | OM 904LA | | 09/97 ▸ | 9705000054 | **818035** | 500 537 | |
| **812** | D | 4250 | OM 904LA | | 09/97 ▸ | 9705000054 | **818035** | 500 537 | |
| **815 F / K / L** | D | 4250 | OM 904LA | | 09/97 ▸ | 9705000054 | **818035** | 500 537 | |
| **815 F / K / L** | D | 4250 | OM 904LA | | 09/97 ▸ | 9705000054 | **818035** | 500 537 | |
| **817 K / L** | D | 4250 | OM 904LA | | 09/97 ▸ | 9705000054 | **818035** | 500 537 | |
| **817 K / L** | D | 4250 | OM 904LA | | 09/97 ▸ | 9705000054 | **818035** | 500 537 | |
| **917 AF / K / KO / L** | D | 4250 | OM 904LA | | 09/97 ▸ | 9705000054 | **818035** | 500 537 | |
| **917 AF / K / KO / L** | D | 4250 | OM 904LA | | 09/97 ▸ | 9705000054 | **818035** | 500 537 | |
| **ATEGO II** | | | | | | | | | |
| **1328/1528** | D | 6370 | OM 906LA | | 03/98 ▸ | 9705000054 | **818035** | 500 537 | |
| **1828 A / AK / L / LS** | D | 6370 | OM 906LA | | 09/97 ▸ | 9705000054 | **818035** | 500 537 | |
| **1828 A / AK / L / LS** | D | 6370 | OM 906LA | | 09/97 ▸ | 9705000054 | **818035** | 500 537 | |
| **2528 L** | D | 6370 | OM 906LA | | 09/97 ▸ | 9705000054 | **818035** | 500 537 | |
| **2528 L** | D | 6370 | OM 906LA | | 09/97 ▸ | 9705000054 | **818035** | 500 537 | |
| **2628** | D | 6370 | OM 906LA | | 09/97 ▸ | 9705000054 | **818035** | 500 537 | |
| **2628** | D | 6370 | OM 906LA | | 09/97 ▸ | 9705000054 | **818035** | 500 537 | |
| **823/1023/1223/1523** | D | 6370 | OM 906LA | | 03/98 ▸ | 9705000054 | **818035** | 500 537 | |
| **917/1017/1217/1517** | D | 6370 | OM 906LA | | 03/98 ▸ | 9705000054 | **818035** | 500 537 | |
| **MINI** | | | | | | | | | |
| **MINI** | | | | | | | | | |
| **1.6 i 16V** | E | 1598 | W10B16A-90/115<br>W11B16A-163/170 | +/ R134 | 09/01 ▸ | 64531490572 | **817547** | 590 315 | AL |
| **1.4 d** | D | 1364 | 1ND | +/ R134 | 05/03 ▸ | 64536918597 | **817837** | 480 361 | AL |
| **MITSUBISHI** | | | | | | | | | |
| **CARISMA (95>99)** | | | | | | | | | |
| **1.9 TD** | D | 1870 | F8Q | | 05/96 ▸ 02/99 | CAB311B080 | **817560** | 608 351 | AL |
| **CARISMA (99>)** | | | | | | | | | |
| **1.9 DI-D** | D | 1870 | F9Q1 | +/ R134 | 03/99 ▸ 12/03 | MR513110 | **817790** | 635 478 | AL |
| **COLT (91>96)** | | | | | | | | | |
| **1.6** | E | 1597 | 4G92 | | 12/91 ▸ 12/96 | MB657967 | **814240** | 624 318 | AL |
| **1.8 16V** | E | 1834 | 4G93-1 | | 12/91 ▸ 12/96 | MB657967 | **814240** | 624 318 | AL |
| **COLT (96>)** | | | | | | | | | |
| **1300 (CJ1A)** | E | 1299 | 4G13 | | 05/96 ▸ 09/00 | MR218428 | **814303** | 622 288 | AL |
| **1500 (CJ2A)** | E | 1468 | 4G15 | | 01/96 ▸ 07/05 | MR218428 | **814303** | 622 288 | AL |
| **1600 (CJ4A)** | E | 1597 | 4G92 | | 05/96 ▸ 09/00 | MR218428 | **814303** | 622 288 | AL |
| **GALANT (92>96)** | | | | | | | | | |
| **1.8** | E | 1834 | 4G93-0,4G93-OM3 | | 11/92 ▸ 08/95 | MB813733 | **818081** | 634 328 | AL |
| **2.0 16V,2.0 24V,2.0 V6 24V** | E | 1997 | 4G63-68,4G63-6M<br>6A12-0 | | 11/92 ▸ 08/95 | MB813733 | **818081** | 634 328 | AL |

Condenser Condenseur Kondensator Condensatore Condensor Condensador КОНДЕНСЕР Kondenser Kondenzátor Condensator Συμπυκνωτής



• **New** Nouveau **Nuevo** Novo **Nuovo** Nieuw **Neu** Nowość **Yeni** Новый Νέο **Novy**

# MITSUBISHI (.../...)

| | | CC | | | | OE | Valeo | DIM | TECH |
|---|---|---|---|---|---|---|---|---|---|
| **GALANT (92>96) (.../...)** | | | | | | | | | |
| **2.5 V6 24V** | E | 2497 | 6G73 | | 11/92 ▸ 08/95 | MB813733 | **818081** | 634 328 | AL |
| **2.0 TD** | D | 1998 | 4D68T-1 | | 11/92 ▸ 08/95 | MB813733 | **818081** | 634 328 | AL |
| **GALANT (96>2003)** | | | | | | | | | |
| **2.0 i 16V** | E | 1997 | 4G63-6,4G63-6G<br>4G63-6GR,4G63-6M<br>4G63-6T | | 10/96 ▸ 05/03 | MR513005 | **814260** | 651 328 | AL |
| **2.4 GDI,2.4 i** | E | 2351 | 4G64-41,4G64-418<br>4G64-41R,4G64-43 | | 12/98 ▸ 05/03 | MR513005 | **814260** | 651 328 | AL |
| **2.5 i V6 24V** | E | 2497 | 6A13-41,6A13-48<br>6A13-4E,6A13-4F | | 10/96 ▸ 05/03 | MR513005 | **814260** | 651 328 | AL |
| **2.0 TD** | D | 1998 | 4D68-4E,4D68-4E0 | | 10/96 ▸ 02/00 | MR513005 | **814260** | 651 328 | AL |
| **LANCER (92>96)** | | | | | | | | | |
| **1.3** | E | 1299 | 4G13-2J | | 12/93 ▸ 12/96 | MB657967 | **814240** | 624 318 | AL |
| **1.6 i** | E | 1597 | 4G92-01,4G92-0G<br>4G92-0H | | 06/92 ▸ 2000 | MB657967 | **814240** | 624 318 | AL |
| **1.8 16V** | E | 1834 | 4G93-1 | | 05/92 ▸ 12/96 | MB657967 | **814240** | 624 318 | AL |
| **2.0 D** | D | 1998 | 4D68-0A,4D68-0E | | 05/92 ▸ 12/96 | MB657967 | **814240** | 624 318 | AL |
| **LANCER (96>)** | | | | | | | | | |
| **1.3** | E | 1299 | 4G13 | | 06/96 ▸ | MR218428 | **814303** | 622 288 | AL |
| **1.6 16V** | E | 1597 | 4G92 | | 06/96 ▸ | MR218428 | **814303** | 622 288 | AL |
| **2,0 D** | D | 1998 | 4D68 | | 06/96 ▸ | MR218428 | **814303** | 622 288 | AL |
| **LANCER (2003>)** | | | | | | | | | |
| **1.3 16V** | E | 1299 | 4G13-6 | +R134 | 06/03 ▸ | MN151100 | **814273** | 675 334 | AL |
| **1.6 i 16V** | E | 1584 | 4G18-6 | +R134 | 06/03 ▸ | MN151100 | **814273** | 675 334 | AL |
| **2.0 i 16V** | E | 1997 | 4G63-7 | +R134 | 06/03 ▸ | MN151100 | **814273** | 675 334 | AL |
| **1.3 i** | E | 1299 | 4G13 | | 09/03 ▸ | MN134204 | **814272** | 675 334 | AL |
| **1.6 i** | E | 1584 | 4G18 | | 09/03 ▸ | MN134204 | **814272** | 675 334 | AL |
| **1.8 Sei** | E | 1834 | 4G93 | | 09/03 ▸ | MN134204 | **814272** | 675 334 | AL |
| **2.0 i** | E | 1997 | 4G63 | | 09/03 ▸ | MN134204 | **814272** | 675 334 | AL |
| **LANCER (2007>)** | | | | | | | | | |
| **1.5 MIVEC 16V** | E | 1499 | 4A91 | +R134 | 03/07 ▸ | 7812A030 | **814315** | 616 407 | AL |
| **1.8 MIVEC 16V** | E | 1798 | 4B10 | +R134 | 01/08 ▸ | 7812A030 | **814315** | 616 407 | AL |
| **2.0 MIVEC 16V** | E | 1998 | 4B11 | +R134 | 03/07 ▸ | 7812A030 | **814315** | 616 407 | AL |
| **2.0 MIVEC 16V** | E | 1999 | 4B11-T/C | +R134 | 06/08 ▸ | 7812A204 | **814315** | 616 407 | AL |
| **2.0 DI-D 16V** | D | 1968 | BSY,BSY/F | +R134 | 06/07 ▸ 06/10 | 7812A030 | **814315** | 616 407 | AL |
| **LANCER EVOLUTION** | | | | | | | | | |
| **2.0 i Turbo** | E | 1997 | 4G63-7TC,4G63-7Z1 | +R134 | 12/00 ▸ 07/07 | MN151100 | **814273** | 675 334 | AL |
| **2.0 MIVEC Turbo 16V** | E | 1998 | 4B11 | +R134 | 07/09 ▸ | 7812A204 | **814315** | 616 407 | AL |
| **LANCER SPORTBACK (CX) (2008>)** | | | | | | | | | |
| **1.8 MIVEC 16V** | E | 1798 | 4B10 | +R134 | 07/08 ▸ | 7812A030 | **814315** | 616 407 | AL |
| **2.0 DI-D 16V** | D | 1968 | BSY,BSY/F | +R134 | 08/08 ▸ 06/10 | 7812A030 | **814315** | 616 407 | AL |
| **MONTERO SPORT** | | | | | | | | | |
| **3.0 i V6 24V** | E | 2972 | 6G72-8-GG | +R134 | 08/98 ▸ 02/09 | MR513110 | **817790** | 635 478 | AL |
| **2.5 TD** | D | 2477 | 4D56T-4P | +R134 | 08/98 ▸ 02/09 | MN123332 | **817790** | 635 478 | AL |
| **OUTLANDER (2006>)** | | | | | | | | | |
| **2.4 MIVEC 16V,2.4 i 16V** | E | 2360 | 4B12 | +R134 | 06/07 ▸ | 7812A030 | **814315** | 616 407 | AL |
| **3.0 V6** | E | 2998 | 6B31 | +R134 | 11/06 ▸ 05/09 | 7812A030 | **814315** | 616 407 | AL |
| **2.0 DI-D** | D | 1968 | BSY,BSY/F | +R134 | 11/06 ▸ | 7812A204 | **814315** | 616 407 | AL |
| **2.2 DI-D 16V** | D | 2179 | DW12 | +R134 | 08/07 ▸ | 7812A030 | **814315** | 616 407 | AL |
| **PAJERO III (2000>)** | | | | | | | | | |
| **3.5 GDI V6 24V** | E | 3497 | 6G74-B | +R134 | 02/00 ▸ 05/04 | MN123332 | **817790** | 635 478 | AL |
| **2.5 TD** | D | 2477 | 4D56T-4,4D56T-5 | +R134 | 02/00 ▸ 08/06 | MN123332 | **817790** | 635 478 | AL |
| **3.2 DI-D** | D | 3200 | 4M41,4M410A | +R134 | 02/00 ▸ 08/06 | MN123332 | **817790** | 635 478 | AL |
| **PAJERO SPORT (98>2009)** | | | | | | | | | |
| **2.5 TD** | D | 2477 | 4D56T-4P<br>4D56T-4P-115 | +R134 | 08/98 ▸ 02/09 | MR513110 | **817790** | 635 478 | AL |

| | | CC | | | | OE | Valeo | DIM | TECH |
|---|---|---|---|---|---|---|---|---|---|
| **MITSUBISHI** (.../...) | | | | | | | | | |
| **PAJERO SPORT (98>2009) (.../...)** | | | | | | | | | |
| **3.0 i V6 24V** | E | 2972 | 6G72-8-GG | +/ R134 | 08/98 ▸ 05/00 | MR513110 | **817790** | 635 478 | AL |
| **SHOGUN 3** | | | | | | | | | |
| **3.5 GDI V6 24V** | E | 3497 | 6G74-B | +/ R134 | 02/00 ▸ 05/04 | MN123332 | **817790** | 635 478 | AL |
| **2.5 TD** | D | 2477 | 4D56T | +/ R134 | 02/00 ▸ 05/04 | MN123332 | **817790** | 635 478 | AL |
| **3.2 DI-D** | D | 3200 | 4M410A | +/ R134 | 07/00 ▸ 08/06 | MN123332 | **817790** | 635 478 | AL |
| **SPACE RUNNER** | | | | | | | | | |
| **1.8 i** | E | 1834 | 4G93,4G93-0M3 | | 06/91 ▸ 05/99 | MR116930 | **818081** | 634 328 | AL |
| **2.4 GDi** | E | 2351 | 4G64-414 | | 05/99 ▸ 2002 | MR116930 | **818081** | 634 328 | AL |
| **2.0 TD** | D | 1998 | 4D68T | | 06/92 ▸ 2002 | MR116930 | **818081** | 634 328 | AL |
| **SPACE STAR** | | | | | | | | | |
| **1.9 DI-D** | D | 1870 | F9Q1, F9Q2 | | 06/00 ▸ | CAB311B080 | **817560** | 608 351 | AL |
| **SPACE WAGON (98>)** | | | | | | | | | |
| **2.0 i** | E | 1997 | 4G63-MPI | +/ R134 | 06/00 ▸ 01/04 | MR996738 | **814262** | 710 428 | AL |
| **2.4 GDi** | E | 2351 | 4G64-2,4G64-412<br>4G64-414,4G64-481 | +/ R134 | 07/98 ▸ 01/04 | MR996738 | **814262** | 710 428 | AL |
| **MITSUBISHI** | | | | | | | | | |
| **L 200 II (K84T) (2006>)** | | | | | | | | | |
| **2.5 DI-D,2.5 TD,2.5 TD Hi-Power** | D | 2477 | 4D56 | +/ R134 | 01/06 ▸ | 7812A171 | **814214** | 467 434 | AL |
| **NISSAN** | | | | | | | | | |
| **ALMERA (95>2000)** | | | | | | | | | |
| **1.4 i 16V** | E | 1392 | GA14DE | R134 | 07/95 ▸ 06/96 | 921102M112 | **817792** | 654 268 | AL |
| **1.4 i 16V** | E | 1392 | GA14DE | R134 | 06/96 ▸ 11/97 | 921102M117 | **817794** | 654 268 | AL |
| **1.6 i 16V** | E | 1597 | GA16DE | R134 | 07/95 ▸ 06/96 | 921102M112 | **817792** | 654 268 | AL |
| **1.6 i 16V** | E | 1597 | GA16DE | R134 | 06/96 ▸ 11/97 | 921102M117 | **817794** | 654 268 | AL |
| **2.0 i 16V** | E | 1998 | SR20DEB | R134 | 06/96 ▸ 11/97 | 921102M117 | **817794** | 654 268 | AL |
| **2.0 i 16V** | E | 1998 | SR20DEB | R134 | 04/96 ▸ 06/96 | 921102M112 | **817792** | 654 268 | AL |
| **2.0 D** | D | 1974 | CD20 | R134 | 06/96 ▸ 11/97 | 921102M117 | **817794** | 654 268 | AL |
| **2.0 D** | D | 1974 | CD20 | R134 | 07/95 ▸ 06/96 | 921102M112 | **817792** | 654 268 | AL |
| **ALMERA (2000>2003)** | | | | | | | | | |
| **1.5 i 16V** | E | 1497 | QG15DE | | 02/00 ▸ 01/03 | 92110BM405 | **817819** | 694 318 | AL |
| **1.8 i 16V** | E | 1769 | QG18DE | | 02/00 ▸ 01/03 | 92110BM405 | **817819** | 694 318 | AL |
| **1.5 dCi** | D | 1461 | K9K.7 | +/ R134 | 09/02 ▸ 01/03 | 92100BN900 | **817822** | 692 308 | AL |
| **2.2 TDi 16V,2.2 VDi 16V** | D | 2184 | YD22-110 | | 02/00 ▸ 01/03 | 92110BM400 | **817819** | 694 318 | AL |
| **ALMERA (2003>2006)** | | | | | | | | | |
| **1.5 i 16V** | E | 1497 | QG15DE | | 02/03 ▸ 11/06 | 92110BM400 | **817819** | 694 318 | AL |
| **1.8 i 16V** | E | 1769 | QG18DE | | 02/03 ▸ 11/06 | 92110BM400 | **817819** | 694 318 | AL |
| **1.5 DCi** | D | 1461 | K9K.7 | | 02/03 ▸ 11/06 | 92110BM400 | **817819** | 694 318 | AL |
| **1.5 DCi** | D | 1461 | K9K.7 | +/ R134 | 02/03 ▸ 11/06 | 92100BN900 | **817822** | 692 308 | AL |
| **2.2 DCi 16V** | D | 2184 | YD22DDTI-112<br>YD22DDTI | | 02/03 ▸ 11/06 | 92110BM400 | **817819** | 694 318 | AL |
| **2.2 DCi 16V** | D | 2184 | YD22DDTI | +/ R134 | 02/03 ▸ 11/06 | 92100BN900 | **817822** | 692 308 | AL |
| **JUKE** | | | | | | | | | |
| **2.0 i** | E | | VTEC | +/ R134 | 07/10 ▸ | 92110EW80A | **814221** | 650 343 | AL |
| **MAXIMA QX** | | | | | | | | | |
| **2.0** | E | 1995 | VQ20DE | | 02/95 ▸ 01/97 | 921100L710 | **814256** | 698 368 | AL |
| **2.5 V6 24V** | E | 2496 | VQ25DE | | 02/95 ▸ 08/00 | 921100L710 | **814256** | 698 368 | AL |
| **3.0 V6 24V** | E | 2988 | VQ30DE | | 03/00 ▸ | 921100L710 | **814256** | 698 368 | AL |
| **MICRA (K11) (92>2000)** | | | | | | | | | |
| **1.3 i** | E | 1275 | CG13DE | | 08/92 ▸ 05/96 | 9211050B00 | **814300** | 554 288 | AL |
| **1.3 i** | E | 1275 | CG13DE | N/ R134 | 02/98 ▸ 06/00 | 921106F600 | **817732** | 554 278 | AL |
| **1.0 i 16V** | E | 998 | CG10DE | N/ R134 | 08/92 ▸ 06/00 | 921106F600 | **817732** | 554 278 | AL |
| **1.0 i 16V** | E | 998 | CG10DE | | 08/92 ▸ 05/96 | 9211050B00 | **814300** | 554 288 | AL |
| **1.5 D** | D | 1527 | TD15 | N/ R134 | 04/98 ▸ 06/00 | 921106F600 | **817732** | 554 278 | AL |

Condenser Condenseur Kondensator Condensatore Condensor Condensador КОНДЕНСЕР Kondenser Kondenzátor Condensator Συμπυκνωτής



• **New** Nouveau **Nuevo** Novo **Nuovo** Nieuw **Neu** Nowość **Yeni** Новый Νέο **Novy**

| | | CC | | | | OE | Valeo | DIM | TECH |
|---|---|---|---|---|---|---|---|---|---|
| **NISSAN (.../...)** | | | | | | | | | |
| **MICRA (K11) (2000>2002)** | | | | | | | | | |
| **1.4 i 16V** | E | 1348 | CGA3 | N/ R134 | 07/00 ▸ 12/02 | 921106F600 | **817732** | 554 278 | AL |
| **1.0 i 16V** | E | 998 | CG10DE | N/ R134 | 07/00 ▸ 12/02 | 921106F600 | **817732** | 554 278 | AL |
| **1.5 D** | D | 1527 | TD15 | N/ R134 | 07/00 ▸ 12/02 | 921106F600 | **817732** | 554 278 | AL |
| **PATROL (79>97)** | | | | | | | | | |
| **2.8** | E | 2753 | L28 | | 07/80 ▸ 07/88 | 92101G9800 | **814252** | 697 328 | AL |
| **2.8 TD** | D | 2826 | RD28TI | | 05/86 ▸ 06/90 | 92101G9800 | **814252** | 697 328 | AL |
| **3.2 D, 3.2TD** | D | 3246 | SD33, SD33T | | 11/79 ▸ 07/88 | 92101G9800 | **814252** | 697 328 | AL |
| **PRIMERA (P11) (96>2001)** | | | | | | | | | |
| **1.6 i 16V** | E | 1597 | GA16DEB | | 06/96 ▸ 08/00 | 921102F000 | **817253** | 694 301 | AL |
| **1.6 i 16V** | E | 1597 | GA16DEB | | 09/00 ▸ 02/01 | 921109F515 | **817603** | 694 301 | AL |
| **1.8 i 16V** | E | 1769 | QG18DE | | 09/00 ▸ 02/01 | 921109F515 | **817603** | 694 301 | AL |
| **2.0 i 16V** | E | 1998 | SR20DE, SR20DEC | | 06/96 ▸ 08/00 | 921102F000 | **817253** | 694 301 | AL |
| **2.0 i 16V** | E | 1998 | SR20DE, SR20DEC | | 09/00 ▸ 02/01 | 921109F515 | **817603** | 694 301 | AL |
| **2.0 TD** | D | 1974 | CD20T | | 06/96 ▸ 08/00 | 921102F000 | **817253** | 694 301 | AL |
| **2.0 TD** | D | 1974 | CD20T | | 09/00 ▸ 02/01 | 921109F515 | **817603** | 694 301 | AL |
| **PRIMERA (P12) (2001>)** | | | | | | | | | |
| **2.2 dCi 16V** | D | 2184 | YD22DDT | + R134 | 01/03 ▸ 2006 | 92100BN900 | **817822** | 692 308 | AL |
| **PRIMERA BREAK (W11) (98>2002)** | | | | | | | | | |
| **1.6 i 16V** | E | 1597 | GA16DEB, GA16DEF | | 01/98 ▸ 08/00 | 921102F000 | **817253** | 694 301 | AL |
| **1.6 i 16V** | E | 1597 | GA16DEB, GA16DEF | | 09/00 ▸ 02/01 | 921109F515 | **817603** | 694 301 | AL |
| **1.8 i 16V** | E | 1769 | QG18DE | | 09/00 ▸ 02/01 | 921109F515 | **817603** | 694 301 | AL |
| **2.0 i 16V** | E | 1998 | SR20DE, SR20DEF | | 01/98 ▸ 08/00 | 921102F000 | **817253** | 694 301 | AL |
| **2.0 i 16V** | E | 1998 | SR20DE, SR20DEF | | 09/00 ▸ 02/01 | 921109F515 | **817603** | 694 301 | AL |
| **2.0 TD** | D | 1974 | CD20T | | 01/98 ▸ 08/00 | 921102F000 | **817253** | 694 301 | AL |
| **2.0 TD** | D | 1974 | CD20T | | 09/00 ▸ 02/01 | 921109F515 | **817603** | 694 301 | AL |
| **QASHQAI (2007>2010)** | | | | | | | | | |
| **2.0 i** | E | 1997 | MR20DE | + R134 | 03/07 ▸ 01/10 | 92100JD200 | **814008** | 643 400 | AL |
| **1.5 dCi** | D | 1461 | K9K-1.5/F,K9K.7.64 | + R134 | 03/07 ▸ 01/10 | 92100JD500 | **814009** | 643 400 | AL |
| **2.0 dCi** | D | 1995 | M9R/F | + R134 | 03/07 ▸ 01/10 | 92100JD700 | **814010** | 643 400 | AL |
| **SUNNY (Y10) (90>96)** | | | | | | | | | |
| **1.6** | E | 1597 | GA16DS | | 11/90 ▸ 10/92 | 9211165Y00 | **814275** | 643 289 | AL |
| **TERRANO (87>95)** | | | | | | | | | |
| **2.4 i** | E | 2389 | Z24I | | 10/87 ▸ 02/93 | 9211001G61 | **814284** | 642 373 | AL |
| **3.0 i** | E | 2960 | VG30E | | 01/90 ▸ 12/95 | 9211001G61 | **814284** | 642 373 | AL |
| **2.7 TD** | D | 2664 | TD27T | | 02/89 ▸ 12/95 | 9211001G61 | **814284** | 642 373 | AL |
| **X-TRAIL (2007>)** | | | | | | | | | |
| **2.0 16V** | E | 1997 | MR20DE | + R134 | 03/07 ▸ 07/10 | 92100JG000 | **814231** | 644 409 | AL |
| **2.5 16V** | E | 2488 | QR25DE | + R134 | 03/07 ▸ 07/10 | 92100JG000 | **814231** | 644 409 | AL |
| **2.0 dCi 16V** | D | 1995 | M9R/F | + R134 | 03/07 ▸ 07/10 | 92100JG000 | **814231** | 644 409 | AL |
| **NISSAN** | | | | | | | | | |
| **INTERSTAR** | | | | | | | | | |
| **1.9 dCi** | D | 1870 | F9Q.7.72 | | 09/02 ▸ 01/03 | 2765000QAF | **817742** | 690 376 | AL |
| **2.2 dCi** | D | 2188 | G9T.7.22 | | 09/02 ▸ 01/03 | 2765000QAF | **817742** | 690 376 | AL |
| **2.5 dCi** | D | 2463 | G9U.7.20 | | 09/02 ▸ 01/03 | 2765000QAF | **817742** | 690 376 | AL |
| **KING CAB (D22)** | | | | | | | | | |
| **2.4 i** | E | 2389 | KA24DE,KA24E-1 | | 02/98 ▸ 03/03 | 92110VJ200 | **814304** | 698 318 | AL |
| **2.5 TDi** | D | 2488 | TD25TI | | 02/98 ▸ 11/01 | 92110VJ200 | **814304** | 698 318 | AL |
| **2.5 TD** | D | 2494 | TD25-83 | | 02/98 ▸ 07/02 | 921103S401 | **814304** | 698 318 | AL |
| **OPEL** | | | | | | | | | |
| **ASTRA G (98>)** | | | | | | | | | |
| **1.2 i 16V** | E | 1199 | X12XE, Z12XE | + R134 | 02/98 ▸ 12/01 | 1850074 | **817505** | 548 381 | AL |
| **1.2 i 16V** | E | 1199 | X12XE, Z12XE | | 01/02 ▸ | 1850073 | **818047** | 555 382 | AL |
| **1.4 i 16V** | E | 1389 | X14XE, Z14XE | + R134 | 02/98 ▸ 12/01 | 1850074 | **817505** | 548 381 | AL |
| **1.4 i 16V** | E | 1389 | X14XE, Z14XE | | 01/02 ▸ | 1850073 | **818047** | 555 382 | AL |

# OPEL (.../...)

## ASTRA G (98>) (.../...)

| | | CC | | | | OE | Valeo | DIM | TECH |
|---|---|---|---|---|---|---|---|---|---|
| **1.6 i, 1.6 i 16V** | E | 1598 | X16SZR, X16XEL<br>Z16SE/E4, Z16XE | R134 | 02/98 ▸ 12/01 | 1850074 | **817505** | 548 381 | AL |
| **1.6 i, 1.6 i 16V**<br>**1.6 i Twinport 16V** | E | 1598 | C16SEL, Z16SE/E4<br>Z16XE, Z16XEP(103) | | 01/02 ▸ | 1850073 | **818047** | 555 382 | AL |
| **1.6 i GNV** | G | 1598 | Z16YNG | | 03/03 ▸ | 1850073 | **818047** | 555 382 | AL |
| **1.8 i 16V** | E | 1796 | X18XE1, Z18XE<br>Z18XEL | R134 | 02/98 ▸ 12/01 | 1850074 | **817505** | 548 381 | AL |
| **1.8 i 16V** | E | 1796 | X18XE1, Z18XE<br>Z18XEL | | 01/02 ▸ | 1850073 | **818047** | 555 382 | AL |
| **2.0 i 16V, 2.0 i Turbo 16V** | E | 1998 | X20XEV, Z20LER-200<br>Z20LET-190<br>Z20LET-192 | R134 | 02/98 ▸ | 1850074 | **817505** | 548 381 | AL |
| **2.2 i 16V** | E | 2198 | Z22SE | R134 | 10/99 ▸ 12/01 | 1850074 | **817505** | 548 381 | AL |
| **2.2 i 16V** | E | 2198 | Z22SE | | 01/02 ▸ | 1850073 | **818047** | 555 382 | AL |
| **1.7 DTi 16V, 1.7 TD**<br>**1.7 TD Ecoturbo**<br>▸ 22027043 | D | 1686 | X17DTL, Y17DT | | 02/98 ▸ | 1850078 | **817506** | 414 371 | AL |
| **2.0 DTi 16V, 2.0 Di 16V**<br>▸ 25012732 | D | 1995 | X20DTL, Y20DTH | | 02/98 ▸ | 1850078 | **817506** | 414 371 | AL |
| **2.0 DTi 16V, 2.0 Di 16V** | D | 1995 | X20DTL | R134 | 02/98 ▸ 12/01 | 1850074 | **817505** | 548 381 | AL |
| **2.0 Di 16V** | D | 1995 | Y20DTL | | 01/02 ▸ | 1850073 | **818047** | 555 382 | AL |
| **2.2 DTI 16V**<br>▸ 28013601 | D | 2171 | Y22DTR | | 03/01 ▸ | 1850078 | **817506** | 414 371 | AL |

## ASTRA H (2004>)

| | | | | | | | | | |
|---|---|---|---|---|---|---|---|---|---|
| **1.2 i Twinport 16V** | E | 1229 | Z12XEP | R134 | 03/04 ▸ | 1850097 | **817846** | 588 381 | AL |
| **1.4 i Twinport 16V** | E | 1364 | Z14XEP | R134 | 03/04 ▸ | 1850096 | **817839** | 548 381 | AL |
| **1.6 i Twinport** | E | 1598 | Z16XEP(103) | R134 | 03/04 ▸ | 1850096 | **817839** | 548 381 | AL |
| **1.6 i Twinport 16V** | E | 1598 | Z16XEP,Z16XER | R134 | 03/04 ▸ | 1850097 | **817846** | 588 381 | AL |
| **1.8 i** | E | 1796 | Z18XE | R134 | 03/04 ▸ | 1850096 | **817839** | 548 381 | AL |
| **1.8 i 16V** | E | 1796 | Z18XE,Z18XER | R134 | 03/04 ▸ | 1850097 | **817846** | 588 381 | AL |
| **2.0 i Turbo 16V** | E | 1998 | Z20LEL-170<br>Z20LER-200 | R134 | 03/04 ▸ | 1850098 | **818114** | 588 381 | AL |
| **2.0 i Turbo 16V OPC** | E | 1998 | Z20LEH | R134 | 03/05 ▸ | 1850111 | **818168** | 520 331 | AL |
| **1.3 CDTi 16V** | D | 1248 | Z13DTH | R134 | 08/05 ▸ | 1850111 | **818168** | 520 331 | AL |
| **1.7 CDTI** | D | 1686 | Z17DTH, Z17DTL | R134 | 03/04 ▸ | 1850099 | **817847** | 368 381 | AL |
| **1.9 CDTI, 1.9 CDTI 16V** | D | 1910 | Z19DTH, Z19DTL | R134 | 07/04 ▸ | 1850111 | **818168** | 520 331 | AL |

## ASTRA J (2009>)

| | | | | | | | | | |
|---|---|---|---|---|---|---|---|---|---|
| **1.4 i Turbo 16V** | E | 1364 | A14NET | | 01/10 ▸ | 1850136 | **814201** | 568 401 | |
| **1.4 i Twinport 16V** | E | 1398 | A14XER | | 09/09 ▸ | 1850136 | **814201** | 568 401 | |
| **1.6 i 115 16V,1.6 i Turbo 16V** | E | 1598 | A16LET,A16XER | | 09/09 ▸ | 1850136 | **814201** | 568 401 | |
| **1.3 CDTI 16V** | D | 1248 | A13DTE/F | | 01/10 ▸ | 1850136 | **814201** | 568 401 | |
| **1.7 CDTI 110 16V** | D | 1686 | A17DTJ/F | | 09/09 ▸ | 1850136 | **814201** | 568 401 | |
| **1.7 CDTI 125 16V** | D | 1686 | A17DTR/F | | 09/09 ▸ | 1850135 | **814202** | 668 401 | |
| **2.0 CDTI 160 16V** | D | 1956 | A20DTH/F | | 09/09 ▸ | 1850135 | **814202** | 668 401 | |

## CORSA B (93>2000)

| | | | | | | | | | |
|---|---|---|---|---|---|---|---|---|---|
| **1.0 i 12V**<br>R4147617 ▸ | E | 973 | X10XE | | 03/97 ▸ 08/00 | 1618108 | **816902** | 600 305 | AL |
| **1.2, 1.2 i**<br>R4147617 ▸ | E | 1195 | 12NZ, C12NZ, X12SZ | | 03/93 ▸ 08/00 | 1618108 | **816902** | 600 305 | AL |
| **1.2 i 16V**<br>R4147617 ▸ | E | 1199 | X12XE | | 03/98 ▸ 08/00 | 1618108 | **816902** | 600 305 | AL |
| **1.4 i, 1.4 i 16V**<br>R4147617 ▸ | E | 1389 | C14NZ, C14SE, X14SZ<br>X14XE | | 03/93 ▸ 08/00 | 1618108 | **816902** | 600 305 | AL |
| **1.6 i 16V**<br>R4147617 ▸ | E | 1598 | C16XE, X16XE | | 03/93 ▸ 08/00 | 1618108 | **816902** | 600 305 | AL |
| **1.5 D, 1.5 TD**<br>R4147617 ▸ | D | 1488 | 15D, 15TD | | 03/93 ▸ 08/00 | 1618108 | **816902** | 600 305 | AL |
| **1.7 D** | D | 1686 | X17D | | 07/95 ▸ 08/00 | 1618108 | **816902** | 600 305 | AL |
| **1.7 D**<br>R4147617 ▸ | D | 1699 | 17DA | | 03/93 ▸ 08/00 | 1618108 | **816902** | 600 305 | AL |

## CORSA C (2000>2003)

| | | | | | | | | | |
|---|---|---|---|---|---|---|---|---|---|
| **1.0 i 12V** | E | 973 | Z10XE | R134 | 09/00 ▸ 08/03 | 1850091 | **817609** | 548 381 | AL |
| **1.2 i 16V** | E | 1199 | Z12XE | R134 | 09/00 ▸ 08/03 | 1850091 | **817609** | 548 381 | AL |
| **1.4 i 16V** | E | 1389 | Z14XE | R134 | 09/00 ▸ 08/03 | 1850091 | **817609** | 548 381 | AL |

Condenser Condenseur Kondensator Condensatore Condensor Condensador ΚΟΝΔΕΝΣΕΡ Kondenser Kondenzátor Condensator Συμπυκνωτής



• **New** Nouveau **Nuevo** Novo **Nuovo** Nieuw **Neu** Nowość **Yeni** Новый Νέο **Novy**

# OPEL (.../...)

| | | CC | | | | OE | Valeo | DIM | TECH |
|---|---|---|---|---|---|---|---|---|---|
| **CORSA C (2000>2003) (.../...)** | | | | | | | | | |
| **1.8 i 16V** | E | 1796 | Z18XE | R134 | 09/00 ▸ 08/03 | 1850091 | **817609** | 548 381 | AL |
| **1.7 DI 16V, 1.7 DTi 16V** | D | 1686 | Y17DT, Y17DTL | R134 | 09/00 ▸ 08/03 | 1850090 | **817610** | 550 265 | AL |
| **1.7 DTi 16V** ▸ 34001717 | D | 1686 | Y17DT | R134 | 09/00 ▸ 08/03 | 1850089 | **818118** | 588 381 | AL |
| **CORSA C (2003>)** | | | | | | | | | |
| **1.0 i Twinport 12V** | E | 998 | Z10XEP | R134 | 09/03 ▸ 12/03 | 1850092 | **817843** | 548 381 | AL |
| **1.0 i Twinport 12V** | E | 998 | Z10XEP | R134 | 01/04 ▸ | 1850114 | **814066** | 545 380 | AL |
| **1.2 i 16V** | E | 1199 | Z12XE | R134 | 09/03 ▸ 12/03 | 1850091 | **817609** | 548 381 | AL |
| **1.2 i 16V** | E | 1199 | Z12XE | R134 | 01/04 ▸ 08/04 | 1850114 | **814066** | 545 380 | AL |
| **1.2 i 16V** | E | 1199 | Z12XE | R134 | 01/04 ▸ 08/04 | 1850092 | **817843** | 548 381 | AL |
| **1.2 i Twinport 16V** | E | 1229 | Z12XEP | R134 | 09/04 ▸ | 1850114 | **814066** | 545 380 | AL |
| **1.4 i Twinport 16V** | E | 1364 | Z14XEP | R134 | 09/03 ▸ 12/03 | 1850092 | **817843** | 548 381 | AL |
| **1.4 i Twinport 16V** | E | 1364 | Z14XEP | R134 | 01/04 ▸ | 1850114 | **814066** | 545 380 | AL |
| **1.8 16V** | E | 1796 | Z18XE | R134 | 09/03 ▸ 12/03 | 1850091 | **817609** | 548 381 | AL |
| **1.8 16V** | E | 1796 | Z18XE | R134 | 01/04 ▸ | 1850092 | **817843** | 548 381 | AL |
| **1.3 CDTI 16V** | D | 1248 | Z13DT | R134 | 09/03 ▸ | 1850093 | **817844** | 548 261 | AL |
| **1.7 DTi 16V** ▸ 34001718 ▸ | D | 1686 | Z17DT | R134 | 09/03 ▸ | 1850089 | **818118** | 588 381 | AL |
| **1.7 CDTI** | D | 1686 | Z17DTH | R134 | 09/03 ▸ | 1850093 | **817844** | 548 261 | AL |
| **CORSA D (2006>)** | | | | | | | | | |
| **1.0 i Twinport 12V** | E | 998 | Z10XEP | R134 | 07/06 ▸ | 1850119 | **818193** | 570 353 | AL |
| **1.2 i Twinport 16V** | E | 1229 | Z12XEP | R134 | 07/06 ▸ | 1850119 | **818193** | 570 353 | AL |
| **1.4 i Twinport 16V** | E | 1364 | Z14XEP | R134 | 07/06 ▸ | 1850119 | **818193** | 570 353 | AL |
| **1.3 CDTI** | D | 1248 | Z13DTH, Z13DTJ | R134 | 07/06 ▸ | 1850168 | **818192** | 540 263 | AL |
| **1.7 CDTI** | D | 1686 | Z17DTR | R134 | 09/06 ▸ | 1850168 | **818192** | 540 263 | AL |
| **SIGNUM** | | | | | | | | | |
| **1.8 i 16V** | E | 1796 | Z18XE | R134 | 06/03 ▸ | 1850076 | **817647** | 658 411 | AL |
| **2.0 i Turbo 16V** | E | 1998 | Z20NET | R134 | 06/03 ▸ | 1850083 | **817852** | 610 410 | AL |
| **2.2 DIG 16V** | E | 2198 | Z22YH | R134 | 06/03 ▸ | 1850076 | **817647** | 658 411 | AL |
| **3.2 i V6 24V** | E | 3175 | Z32SE | R134 | 06/03 ▸ | 1850076 | **817647** | 658 411 | AL |
| **1.9 CDTI, 1.9 CDTI 16V** | D | 1910 | Z19DTH, Z19DTJ | R134 | 04/04 ▸ | 1850095 | **817809** | 619 417 | AL |
| **2.0 DTi 16V** | D | 1995 | Y20DTH | R134 | 06/03 ▸ | 1850077 | **817648** | 658 411 | AL |
| **2.2 DTI 16V** | D | 2171 | Y22DTR | R134 | 06/03 ▸ | 1850077 | **817648** | 658 411 | AL |
| **3.0 CDTi V6 24V** | D | 2958 | Y30DT | R134 | 06/03 ▸ | 1850084 | **817853** | 478 401 | AL |
| **SIGNUM B (2005>)** | | | | | | | | | |
| **1.8 i 16V** | E | 1796 | Z18XE | R134 | 10/05 ▸ | 1850076 | **817647** | 658 411 | AL |
| **2.0 i Turbo 16V** | E | 1998 | Z20NET | R134 | 10/05 ▸ | 1850083 | **817852** | 610 410 | AL |
| **2.2 DIG 16V** | E | 2198 | Z22YH | R134 | 10/05 ▸ | 1850076 | **817647** | 658 411 | AL |
| **1.9 CDTI** | D | 1910 | Z19DTL,Z19DT | R134 | 10/05 ▸ | 1850095 | **817809** | 619 417 | AL |
| **1.9 CDTI 16V** | D | 1910 | Z19DTH | R134 | 10/05 ▸ | 1850095 | **817809** | 619 417 | AL |
| **3.0 CDTi V6 24V** | D | 2958 | Y30DT | R134 | 10/05 ▸ | 1850084 | **817853** | 478 401 | AL |
| **TIGRA (94>2003)** | | | | | | | | | |
| **1.4 i 16V** | E | 1389 | X14XE | | 10/94 ▸ 01/01 | 1618109 | **816924** | 600 274 | AL |
| **1.6 i 16V** | E | 1598 | X16XE | | 10/94 ▸ 01/01 | 1618109 | **816924** | 600 274 | AL |
| **TIGRA TWINTOP (2004>)** | | | | | | | | | |
| **1.4 i Twinport 16V** | E | 1364 | Z14XEP | R134 | 07/04 ▸ 12/04 | 1850092 | **817843** | 548 381 | AL |
| **1.4 i Twinport 16V** | E | 1364 | Z14XEP | R134 | 01/05 ▸ | 1850114 | **814066** | 545 380 | AL |
| **1.8 i 16V** | E | 1796 | Z18XE | R134 | 07/04 ▸ 12/04 | 1850092 | **817843** | 548 381 | AL |
| **1.8 i 16V** | E | 1796 | Z18XE | R134 | 01/05 ▸ | 1850114 | **814066** | 545 380 | AL |
| **1.3 CDTi 16V** | D | 1248 | Z13DT | R134 | 07/04 ▸ | 1850093 | **817844** | 548 261 | AL |
| **VECTRA B (95>99)** | | | | | | | | | |
| **2.0 TDi 16V** | D | 1995 | X20DTH | R134 | 09/97 ▸ 01/99 | 1850051 | **817670** | 510 370 | AL |
| **VECTRA B (99>2002)** | | | | | | | | | |
| **2.0 DTi 16V** | D | 1995 | Y20DTH | R134 | 02/99 ▸ 04/02 | 1850061 | **817670** | 510 370 | AL |
| **2.2 DTI 16V** | D | 2171 | Y22DTR | R134 | 09/00 ▸ 04/02 | 1850061 | **817670** | 510 370 | AL |
| **VECTRA C (2002>2005)** | | | | | | | | | |
| **1.6 i 16V** | E | 1598 | Z16XE | R134 | 04/02 ▸ | 1850076 | **817647** | 658 411 | AL |
| **1.8 i 16V** | E | 1796 | Z18XE, Z18XEL-110 | R134 | 04/02 ▸ | 1850076 | **817647** | 658 411 | AL |

| | | CC | | | | OE | Valeo | DIM | TECH |
|---|---|---|---|---|---|---|---|---|---|
| **OPEL (.../...)** | | | | | | | | | |
| **VECTRA C (2002>2005) (.../...)** | | | | | | | | | |
| **2.0 i Turbo 16V** | E | 1998 | Z20NET | R134 | 03/03 ▸ | 1850083 | **817852** | 610 410 | AL |
| **2.2 DIG 16V, 2.2 i 16V** | E | 2198 | Z22SE, Z22YH | R134 | 04/02 ▸ | 1850076 | **817647** | 658 411 | AL |
| **3.2 i V6 24V** | E | 3175 | Z32SE | R134 | 06/02 ▸ | 1850076 | **817647** | 658 411 | AL |
| **1.9 CDTI, 1.9 CDTI 16V** | D | 1910 | Z19DTH, Z19DTJ | R134 | 04/04 ▸ | 1850095 | **817809** | 619 417 | AL |
| **2.0 DTi 16V** | D | 1995 | Y20DTH | R134 | 04/02 ▸ | 1850077 | **817648** | 658 411 | AL |
| **2.2 DTI 16V** | D | 2171 | Y22DTR | R134 | 04/02 ▸ | 1850077 | **817648** | 658 411 | AL |
| **3.0 CDTI V6 24V** | D | 2958 | Y30DT | R134 | 06/03 ▸ | 1850084 | **817853** | 478 401 | AL |
| **VECTRA C (2005>)** | | | | | | | | | |
| **1.6 i 16V** | E | 1598 | Z16XE | R134 | 10/05 ▸ | 1850076 | **817647** | 658 411 | AL |
| **1.8 i 16V** | E | 1796 | Z18XER | R134 | 10/05 ▸ | 1850076 | **817647** | 658 411 | AL |
| **2.0 i Turbo 16V** | E | 1998 | Z20NET | R134 | 10/05 ▸ | 1850083 | **817852** | 610 410 | AL |
| **2.2 DIG 16V** | E | 2198 | Z22YH | R134 | 10/05 ▸ | 1850076 | **817647** | 658 411 | AL |
| **1.9 CDTI** | D | 1910 | Z19DTL | R134 | 10/05 ▸ | 1850095 | **817809** | 619 417 | AL |
| **1.9 CDTI, 1.9 CDTI 16V** | D | 1910 | Z19DT, Z19DTH | R134 | 10/05 ▸ | 1850095 | **817809** | 619 417 | AL |
| **3.0 CDTI V6 24V** | D | 2958 | Y30DT | R134 | 10/05 ▸ | 1850084 | **817853** | 478 401 | AL |
| **ZAFIRA (98>2003)** | | | | | | | | | |
| **1.6 i 16V** | E | 1598 | X16XEL, Z16XE<br>Z16XE/D3 | R134 | 01/99 ▸ 12/01 | 1850074 | **817505** | 548 381 | AL |
| **1.6 i 16V** | E | 1598 | Z16XE, Z16XE/D3 | | 01/02 ▸ 06/03 | 1850073 | **818047** | 555 382 | AL |
| **1.8 i 16V** | E | 1796 | X18XE1, Z18XE | R134 | 01/99 ▸ 12/01 | 1850074 | **817505** | 548 381 | AL |
| **1.8 i 16V** | E | 1796 | Z18XE | | 01/02 ▸ 06/03 | 1850073 | **818047** | 555 382 | AL |
| **2.0 i Turbo 16V** | E | 1998 | Z20LET | R134 | 09/01 ▸ 06/03 | 1850074 | **817505** | 548 381 | AL |
| **2.2 i 16V** | E | 2198 | Z22SE | R134 | 01/99 ▸ 12/01 | 1850074 | **817505** | 548 381 | AL |
| **2.2 i 16V** | E | 2198 | Z22SE | | 01/02 ▸ 06/03 | 1850073 | **818047** | 555 382 | AL |
| **2.0 DT 16V, 2.0 DTI 16V** | D | 1995 | X20DTL, Y20DTL | R134 | 01/99 ▸ 12/01 | 1850074 | **817505** | 548 381 | AL |
| **2.0 DT 16V, 2.0 DTI 16V** | D | 1995 | X20DTL, Y20DTL | | 01/02 ▸ 06/03 | 1850073 | **818047** | 555 382 | AL |
| **2.0 DTi 16V**<br>▸ 2H009141 | D | 1995 | Y20DTH | | 01/99 ▸ 06/03 | 1850078 | **817506** | 414 371 | AL |
| **ZAFIRA (2003>2005)** | | | | | | | | | |
| **1.6 i GNV** | G | 1598 | Z16YNG | | 07/03 ▸ 06/05 | 1850073 | **818047** | 555 382 | AL |
| **1.6 i 16V** | E | 1598 | Z16XE, Z16XE/D4 | | 07/03 ▸ 06/05 | 1850073 | **818047** | 555 382 | AL |
| **1.8 i 16V** | E | 1796 | Z18XE | | 07/03 ▸ 06/05 | 1850073 | **818047** | 555 382 | AL |
| **2.0 i Turbo 16V** | E | 1998 | Z20LET-192 | R134 | 07/03 ▸ 06/05 | 1850074 | **817505** | 548 381 | AL |
| **2.2 i 16V** | E | 2198 | Z22SE | | 07/03 ▸ 06/05 | 1850073 | **818047** | 555 382 | AL |
| **2.0 DTI 16V** | D | 1995 | Y20DTL | | 07/03 ▸ 06/05 | 1850073 | **818047** | 555 382 | AL |
| **2.2 DTI 16V** | D | 2171 | Y22DTR | | 07/03 ▸ 06/05 | 1850078 | **817506** | 414 371 | AL |
| **ZAFIRA II (2005>)** | | | | | | | | | |
| **1.8 i 16V** | E | 1796 | Z18XER | R134 | 09/05 ▸ | 1850096 | **817839** | 548 381 | AL |
| **2.0 i Turbo 16V** | E | 1998 | Z20LER | R134 | 07/05 ▸ | 1850098 | **818114** | 588 381 | AL |
| **2.0 i Turbo 16V OPC** | E | 1998 | Z20LEH | R134 | 07/05 ▸ | 1850111 | **818168** | 520 331 | AL |
| **2.2 i 16V** | E | 2198 | Z22YH | R134 | 07/05 ▸ | 1850097 | **817846** | 588 381 | AL |
| **1.9 CDTI, 1.9 CDTI 16V** | D | 1910 | Z19DT, Z19DTH<br>Z19DTL | R134 | 07/05 ▸ | 1850111 | **818168** | 520 331 | AL |
| **OPEL** | | | | | | | | | |
| **COMBO (93>2001)** | | | | | | | | | |
| **1.2, 1.2 i**<br>R4147617 ▸ | E | 1195 | 12NZ, C12NZ, X12SZ | | 01/94 ▸ 09/01 | 1618108 | **816902** | 600 305 | AL |
| **1.4 i**<br>S4000001 ▸ | E | 1389 | C14NZ, C14SE, X14SZ | | 03/93 ▸ 09/01 | 1618081 | **816902** | 600 305 | AL |
| **1.7 D** | D | 1686 | X17D | | 07/95 ▸ 09/01 | 1618108 | **816902** | 600 305 | AL |
| **1.7 D**<br>R4147617 ▸ | D | 1699 | 17DA | | 01/94 ▸ 09/01 | 1618108 | **816902** | 600 305 | AL |
| **COMBO (2001>)** | | | | | | | | | |
| **1.4 i Twinport 16V**<br>▸ 54010987 | E | 1364 | Z14XEP | R134 | 07/04 ▸ 01/05 | 1850092 | **817843** | 548 381 | AL |
| **1.4 i Twinport 16V**<br>54010988 ▸ | E | 1364 | Z14XEP | R134 | 02/05 ▸ | 1850114 | **814066** | 545 380 | AL |
| **1.6 i** | E | 1598 | Z16SE/E4 | R134 | 10/01 ▸ 06/04 | 1850091 | **817609** | 548 381 | AL |
| **1.3 CDTI 16V** | D | 1248 | Z13DT | R134 | 07/04 ▸ | 1850093 | **817844** | 548 261 | AL |
| **1.7 DI 16V, 1.7 DTI 16V**<br>23042391 ▸ | D | 1686 | Y17DTL, Y17DT | R134 | 10/01 ▸ 06/04 | 1850089 | **818118** | 588 381 | AL |

Condenser Condenseur Kondensator Condensatore Condensor Condensador КОНДЕНСЕР Kondenser Kondenzátor Condensator Συμπυκνωτής



• **New** Nouveau **Nuevo** Novo **Nuovo** Nieuw **Neu** Nowość **Yeni** Новый Νέο **Novy**

| | | CC | | | | OE | Valeo | DIM | TECH |
|---|---|---|---|---|---|---|---|---|---|
| **OPEL (.../...)** | | | | | | | | | |
| **COMBO (2001>) (.../...)** | | | | | | | | | |
| **1.7 CDTI 16V** | D | 1686 | Z17DTH | R134 | 07/04 ▸ | 1850093 | **817844** | 548 261 | AL |
| **1.7 DI 16V** ▸ 34400468 | D | 1686 | Y17DTL | R134 | 10/01 ▸ 01/03 | 1850090 | **817610** | 550 265 | AL |
| **COMBO TOUR (2002>)** | | | | | | | | | |
| **1.4 i Twinport 16V** | E | 1364 | Z14XEP | R134 | 07/04 ▸ | 1850092 | **817843** | 548 381 | AL |
| **1.6 i** | E | 1598 | Z16SE/E4 | R134 | 04/02 ▸ 06/04 | 1850091 | **817609** | 548 381 | AL |
| **1.3 CDTI 16V** | D | 1248 | Z13DT,Z13DT-FAP | R134 | 07/04 ▸ | 1850093 | **817844** | 548 261 | AL |
| **1.7 DTi 16V, 1.7 CDTI 16V** | D | 1686 | Y17DTL | R134 | 04/02 ▸ | 1850090 | **817610** | 550 265 | AL |
| **1.7 CDTI 16V** | D | 1686 | Z17DTH | R134 | 07/04 ▸ | 1850093 | **817844** | 548 261 | AL |
| **MOVANO** | | | | | | | | | |
| **1.9 DTI** | D | 1870 | F9Q.7.70, F9Q.7.72 | | 08/00 ▸ 07/02 | 4401424 | **817689** | 694 381 | AL |
| **2.2 DTI 16V, 2.5 DTI 16V** ▸ B424976 | D | 2464 | G9U.7.20, G9U.7.24 | | 10/01 ▸ | 4401424 | **817689** | 694 381 | AL |
| **2.5 D** | D | 2445 | S8U.7.72 | | 10/98 ▸ 10/01 | 4500908 | **817065** | 690 376 | AL |
| **VIVARO** | | | | | | | | | |
| **2.0 i 16V** | E | 1998 | F4R.7.20 | | 05/01 ▸ | 4408646 | **817577** | 574 437 | AL |
| **2.0 i 16V** | E | 1998 | F4R.7.20 | | 05/01 ▸ | 4414387 | **817644** | 573 442 | AL |
| **1.9 DTI** | D | 1870 | F9Q.7.60 | | 05/01 ▸ | 4408646 | **817577** | 574 437 | AL |
| **1.9 DTI** | D | 1870 | F9Q.7.60 | | 05/01 ▸ | 4414387 | **817644** | 573 442 | AL |
| **1.9 DI** | D | 1896 | F9Q.7.62 | | 05/01 ▸ | 4408646 | **817577** | 574 437 | AL |
| **1.9 DI** | D | 1896 | F9Q.7.62 | | 05/01 ▸ | 4414387 | **817644** | 573 442 | AL |
| **2.5 DTI** | D | 2463 | G9U.7.30 | | 05/03 ▸ | 4414580 | **817645** | 658 405 | AL |
| **PEUGEOT** | | | | | | | | | |
| **106 (96>2003)** | | | | | | | | | |
| **1.0 i** ▸ 8330 | E | 954 | TU9M | | 03/96 ▸ 08/99 | 6455V5 | **816977** | 540 312 | AL |
| **1.0 i** 8576 ▸ | E | 954 | TU9M | | 05/00 ▸ 07/03 | 6455Z7 | **817655** | 588 321 | AL |
| **1.1, 1.1 i, 1.1 i GPL** ▸ 8330 | E | 1124 | TU1M+, TU1TR | | 03/96 ▸ 08/99 | 6455V5 | **816977** | 540 312 | AL |
| **1.1, 1.1 i, 1.1 i GPL** 8576 ▸ | E | 1124 | TU1M+,TU1JP,TU1TR | | 05/00 ▸ 07/03 | 6455Z7 | **817655** | 588 321 | AL |
| **1.4, 1.4 i** ▸ 8330 | E | 1360 | TU3.2, TU3JP | | 03/96 ▸ 08/99 | 6455V5 | **816977** | 540 312 | AL |
| **1.4, 1.4 i** 8576 ▸ | E | 1360 | TU3.2,TU3JP | | 05/00 ▸ 07/03 | 6455Z7 | **817655** | 588 321 | AL |
| **1.6 i, 1.6 i 16V** ▸ 8330 | E | 1587 | TU5J2, TU5J4, TU5JP | | 03/96 ▸ 08/99 | 6455V5 | **816977** | 540 312 | AL |
| **1.6 i, 1.6 i 16V** 8576 ▸ | E | 1587 | TU5JP,TU5J2,TU5J4 | | 05/00 ▸ 07/03 | 6455Z7 | **817655** | 588 321 | AL |
| **1.5 D** 8576 ▸ | D | 1527 | TUD5,TUD5B | | 01/99 ▸ 07/03 | 6455Z7 | **817655** | 588 321 | AL |
| **1.5 D** ▸ 8330 | D | 1527 | TUD5, TUD5B | | 03/96 ▸ 08/99 | 6455V5 | **816977** | 540 312 | AL |
| **107** | | | | | | | | | |
| **1.0 i 12V** | E | 998 | 384F(CFA) | R134 | 06/05 ▸ | 6455EF | **818013** | 359 351 | AL |
| **1.4 HDi** | D | 1398 | DV4TD | R134 | 06/05 ▸ | 6455EE | **818014** | 359 351 | AL |
| **1007** | | | | | | | | | |
| **1.4 i** | E | 1360 | TU3JP | R134 | 04/05 ▸ | 6455ET | **814095** | 464 371 | AL |
| **1.6 i 16V** | E | 1598 | TU5JP | R134 | 04/05 ▸ | 6455ET | **814095** | 464 371 | AL |
| **1.4 HDi** | D | 1398 | DV4TD | R134 | 04/05 ▸ | 6455ET | **814095** | 464 371 | AL |
| **1.6 HDi 16V** | D | 1560 | DV6TED4 | R134 | 02/07 ▸ | 6455EK | **818015** | 524 368 | AL |
| **206** | | | | | | | | | |
| **1.1 i** ▸ 9792 | E | 1124 | TU1JP | | 09/98 ▸ 08/03 | 6455X9 | **817283** | 556 364 | AL |
| **1.1 i** 9793 ▸ | E | 1124 | TU1JP | 29 Tubes | 09/03 ▸ | 6455CH | **818000** | 556 364 | AL |
| **1.4 i** ▸ 9792 | E | 1360 | TU3JP | | 09/98 ▸ 08/03 | 6455X9 | **817283** | 556 364 | AL |
| **1.4 i** 9793 ▸ | E | 1360 | TU3JP | 29 Tubes | 09/03 ▸ | 6455CH | **818000** | 556 364 | AL |

# PEUGEOT (.../...)

## 206 (.../...)

| | | CC | | | | OE | Valeo | DIM | TECH |
|---|---|---|---|---|---|---|---|---|---|
| **1.4 i, 1.4 i 16V** | E | 1360 | ET3J4, TU3JP | 30 Tubes | 09/03 ▸ | 6455CJ | **818001** | 556 364 | AL |
| **1.6 i, 1.6 i 16V** ▸ 9792 | E | 1587 | TU5JP, TU5JP4 | | 09/98 ▸ 12/03 | 6455X9 | **817283** | 556 364 | AL |
| **1.6 i 16V** | E | 1587 | TU5JP4 | 30 Tubes | 09/03 ▸ | 6455CJ | **818001** | 556 364 | AL |
| **1.6 i, 1.6 i 16V** ▸ 9793 ▸ | E | 1587 | TU5JP, TU5JP4 | 29 Tubes | 09/03 ▸ | 6455CH | **818000** | 556 364 | AL |
| **2.0 i 16V** ▸ 9792 | E | 1997 | EW10J4 | | 04/99 ▸ 08/03 | 6455X9 | **817283** | 556 364 | AL |
| **2.0 i 16V** ▸ 9793 ▸ | E | 1997 | EW10J4, EW10J4S | 29 Tubes | 09/03 ▸ | 6455CH | **818000** | 556 364 | AL |
| **1.4 HDi** | D | 1398 | DV4TD | | 03/02 ▸ 08/03 | 6455Y0 | **817283** | 556 364 | AL |
| **1.4 HDi** | D | 1398 | DV4TD | 30 Tubes | 09/03 ▸ | 6455CJ | **818001** | 556 364 | AL |
| **1.4 HDi** ▸ 9793 ▸ | D | 1398 | DV4TD | 29 Tubes | 09/03 ▸ | 6455CH | **818000** | 556 364 | AL |
| **1.9 D** | D | 1868 | DW8, DW8B | | 09/98 ▸ | 6455X9 | **817283** | 556 364 | AL |
| **1.9 D** | D | 1868 | DW8B | 30 Tubes | 09/03 ▸ | 6455CJ | **818001** | 556 364 | AL |
| **2.0 HDi** | D | 1997 | DW10TD | | 09/99 ▸ 08/03 | 6455Y0 | **817283** | 556 364 | AL |
| **2.0 HDi** | D | 1997 | DW10TD | 30 Tubes | 09/03 ▸ | 6455CJ | **818001** | 556 364 | AL |

## 206 CC

| | | | | | | | | | |
|---|---|---|---|---|---|---|---|---|---|
| **1.6 i 16V** ▸ 9792 | E | 1587 | TU5JP4 | | 02/01 ▸ 08/03 | 6455Y0 | **817283** | 556 364 | AL |
| **1.6 i 16V** ▸ 9793 ▸ | E | 1587 | TU5JP4 | 30 Tubes | 09/03 ▸ | 6455CJ | **818001** | 556 364 | AL |
| **2.0 i 16V** ▸ 9792 | E | 1997 | EW10J4 | | 10/00 ▸ 08/03 | 6455X9 | **817283** | 556 364 | AL |
| **2.0 i 16V** ▸ 9793 ▸ | E | 1997 | EW10J4 | 29 Tubes | 09/03 ▸ | 6455CH | **818000** | 556 364 | AL |

## 206 SW

| | | | | | | | | | |
|---|---|---|---|---|---|---|---|---|---|
| **1.1 i** ▸ 9792 | E | 1124 | TU1JP | | 05/02 ▸ 08/03 | 6455Y0 | **817283** | 556 364 | AL |
| **1.1 i** ▸ 9793 ▸ | E | 1124 | TU1JP | 29 Tubes | 09/03 ▸ | 6455CH | **818000** | 556 364 | AL |
| **1.4 i** ▸ 9792 | E | 1360 | TU3JP | | 05/02 ▸ 08/03 | 6455Y0 | **817283** | 556 364 | AL |
| **1.4 i** ▸ 9793 ▸ | E | 1360 | TU3JP | 29 Tubes | 09/03 ▸ | 6455CH | **818000** | 556 364 | AL |
| **1.4 i, 1.4 i 16V** | E | 1360 | ET3J4, TU3JP | 30 Tubes | 09/03 ▸ | 6455CJ | **818001** | 556 364 | AL |
| **1.6 i 16V** ▸ 9792 | E | 1587 | TU5JP4 | | 05/02 ▸ 08/03 | 6455X9 | **817283** | 556 364 | AL |
| **1.6 i 16V** ▸ 9793 ▸ | E | 1587 | TU5JP4 | 29 Tubes | 09/03 ▸ | 6455CH | **818000** | 556 364 | AL |
| **1.6 i 16V** | E | 1587 | TU5JP4 | 30 Tubes | 09/03 ▸ | 6455CJ | **818001** | 556 364 | AL |
| **2.0 i 16V** ▸ 9792 | E | 1997 | EW10J4 | | 05/02 ▸ 08/03 | 6455X9 | **817283** | 556 364 | AL |
| **2.0 i 16V** ▸ 9793 ▸ | E | 1997 | EW10J4 | 29 Tubes | 09/03 ▸ | 6455CH | **818000** | 556 364 | AL |
| **1.4 HDi** ▸ 9792 | D | 1398 | DV4TD | | 05/02 ▸ 08/03 | 6455Y0 | **817283** | 556 364 | AL |
| **1.4 HDi** ▸ 9793 ▸ | D | 1398 | DV4TD | 29 Tubes | 09/03 ▸ | 6455CH | **818000** | 556 364 | AL |
| **1.4 HDi** | D | 1398 | DV4TD | 30 Tubes | 09/03 ▸ | 6455CJ | **818001** | 556 364 | AL |
| **2.0 HDi** ▸ 9792 | D | 1997 | DW10TD | | 05/02 ▸ 08/03 | 6455X9 | **817283** | 556 364 | AL |
| **2.0 HDi** ▸ 9793 ▸ | D | 1997 | DW10TD | 29 Tubes | 09/03 ▸ | 6455CH | **818000** | 556 364 | AL |
| **2.0 HDi** | D | 1997 | DW10TD | 30 Tubes | 09/03 ▸ | 6455CJ | **818001** | 556 364 | AL |

## 206+ (2009>)

| | | | | | | | | | |
|---|---|---|---|---|---|---|---|---|---|
| **1.1 i** ▸ 03/09 | E | 1124 | TU1A | | ▸ | 6455CH | **818000** | 556 364 | |
| **1.1 i** ▸ 10/10 | E | 1124 | TU1AE5 | | ▸ | 6455CJ | **818001** | 556 364 | |
| **1.4 i** ▸ 03/09 | E | 1360 | TU3A,TU3AE5 | | ▸ | 6455CJ | **818001** | 556 364 | |
| **1.4 HDi** ▸ 03/09 | D | 1398 | DV4C,DV4TD | | ▸ | 6455CJ | **818001** | 556 364 | |

Condenser Condenseur Kondensator Condensatore Condensor Condensador КОНДЕНСЕР Kondenser Kondenzátor Condensator Συμπυκνωτής



• **New** Nouveau **Nuevo** Novo **Nuovo** Nieuw **Neu** Nowość **Yeni** Новый Νέο **Novy**

| | | CC | | | | OE | Valeo | DIM | TECH |
|---|---|---|---|---|---|---|---|---|---|
| **PEUGEOT** (.../...) | | | | | | | | | |
| **207** | | | | | | | | | |
| **1.4 e, 1.4 e 16V** ▸ 11556 | E | 1360 | ET3J4, TU3A | R134 | 03/06 ▸ | 6455EL | **814095** | 464 371 | AL |
| **1.4 VTi, 1.4 VTi 16V** ▸ 11556 | E | 1397 | EP3 | R134 | 07/07 ▸ 06/08 | 6455EL | **814095** | 464 371 | AL |
| **1.6 e 16V** | E | 1587 | TU5JP4 | R134 | 03/06 ▸ | 6455ET | **814095** | 464 371 | AL |
| **1.6 e 16V** 11557 ▸ | E | 1587 | TU5JP4 | R134 | 07/08 ▸ | 6455HG | **818015** | 524 368 | AL |
| **1.6 THP** | E | 1598 | EP6DT | R134 | 09/06 ▸ | 6455EK | **818015** | 524 368 | AL |
| **1.6 VTi, 1.6 e 16V** ▸ 11556 | E | 1598 | EP6 | R134 | 01/07 ▸ | 6455EL | **814095** | 464 371 | AL |
| **1.6e 16V** | E | 1598 | TU5JP4AL4 | R134 | 03/07 ▸ | 6455EK | **818015** | 524 368 | AL |
| **1.4 HDi** | D | 1398 | DV4TD | R134 | 03/06 ▸ | 6455EL | **814095** | 464 371 | AL |
| **1.6 HDi 16V (90)** | D | 1560 | DV6TED4 | R134 | 03/06 ▸ | 6455EK | **818015** | 524 368 | AL |
| **1.6 HDi, 1.6 HDi 16V** 11557 ▸ | D | 1560 | DV6ATED4, DV6TED4 | R134 | 06/08 ▸ | 6455HG | **818015** | 524 368 | AL |
| **306 (93>97)** | | | | | | | | | |
| **1.1 i** | E | 1124 | TU1M, TU1M+ | | 02/93 ▸ 02/97 | 6455AV | **817230** | 568 341 | AL |
| **1.4, 1.4 i** | E | 1360 | TU3, TU3.2, TU3JP TU3MC | | 02/93 ▸ 02/97 | 6455Q9 | **817230** | 568 341 | AL |
| **1.6 i** | E | 1587 | TU5JP | | 02/93 ▸ 02/97 | 6455AV | **817230** | 568 341 | AL |
| **1.8 i** | E | 1761 | XU7JP | | 02/93 ▸ 02/97 | 6455Q9 | **817230** | 568 341 | AL |
| **2.0 i, 2.0 i 16V** | E | 1998 | XU10J2, XU10J2C XU10J4, XU10J4R XU10J4RS | | 06/93 ▸ 02/97 | 6455AV | **817230** | 568 341 | AL |
| **1.8 D** | D | 1769 | XUD7 | | 06/93 ▸ 02/97 | 6455Q9 | **817230** | 568 341 | AL |
| **1.9 D, 1.9 TD** | D | 1905 | XUD9, XUD9A, XUD9TE | | 06/93 ▸ 02/97 | 6455R0 | **817230** | 568 341 | AL |
| **306 (97>)** | | | | | | | | | |
| **1.4, 1.4 i, 1.4 i GPL** | E | 1360 | TU3.2, TU3JP | | 03/97 ▸ 03/02 | 6455AV | **817230** | 568 341 | AL |
| **1.6 i** | E | 1587 | TU5JP, TU5JP+ | | 03/97 ▸ 09/02 | 6455AV | **817230** | 568 341 | AL |
| **1.8 i 16V** | E | 1761 | XU7JP4 | | 03/97 ▸ 02/02 | 6455AW | **817229** | 628 341 | AL |
| **1.8 i, 1.8 i 16V, 1.8 i GPL 16V** | E | 1761 | XU7JP, XU7JP4 | | 03/97 ▸ 09/02 | 6455AV | **817230** | 568 341 | AL |
| **2.0 i 16V** | E | 1998 | XU10J4R, XU10J4RS | | 03/97 ▸ 09/02 | 6455AV | **817230** | 568 341 | AL |
| **1.8 D** | D | 1769 | XUD7 | | 03/97 ▸ 02/02 | 6455AW | **817229** | 628 341 | AL |
| **1.9 D** | D | 1868 | DW8, DW8B | | 11/98 ▸ 03/02 | 6455AW | **817229** | 628 341 | AL |
| **1.9 D, 1.9 SD, 1.9 TD** | D | 1905 | XUD9A, XUD9BSD XUD9TE | | 03/97 ▸ 03/02 | 6455AW | **817229** | 628 341 | AL |
| **2.0 HDi** | D | 1997 | DW10TD | | 03/99 ▸ 03/02 | 6455AW | **817229** | 628 341 | AL |
| **307 (2001>2005)** | | | | | | | | | |
| **1.4 i, 1.4 i 16V** ▸ 10158 | E | 1360 | ET3J4, TU3JP | R134 | 09/01 ▸ 08/04 | 6455AA | **817524** | 518 367 | AL |
| **1.4 i, 1.4 i 16V** 10159 ▸ | E | 1360 | ET3J4, TU3JP | R134 | 08/04 ▸ 06/05 | 6455GK | **818170** | 568 361 | AL |
| **1.6 i, 1.6 i 16V** ▸ 10158 | E | 1587 | TU5JP4 | R134 | 03/01 ▸ 08/04 | 6455AA | **817524** | 518 367 | AL |
| **1.6 i, 1.6 i 16V** 10159 ▸ | E | 1587 | TU5JP4 | R134 | 08/04 ▸ 06/05 | 6455GK | **818170** | 568 361 | AL |
| **2.0 i 16V** ▸ 10158 | E | 1997 | EW10J4 | R134 | 03/01 ▸ 08/04 | 6455AA | **817524** | 518 367 | AL |
| **2.0 i 16V** 10159 ▸ | E | 1997 | EW10A, EW10J4 | R134 | 08/04 ▸ 06/05 | 6455GK | **818170** | 568 361 | AL |
| **2.0 i 16V** ▸ 10163 | E | 1997 | EW10J4S | R134 | 09/03 ▸ 09/04 | 6455AC | **817526** | 518 368 | AL |
| **1.4 HDi** ▸ 10158 | D | 1399 | DV4TD | R134 | 02/02 ▸ 08/04 | 6455AA | **817524** | 518 367 | AL |
| **1.4 HDi** 10159 ▸ | D | 1399 | DV4TD | R134 | 08/04 ▸ 06/05 | 6455GK | **818170** | 568 361 | AL |
| **1.6 HDi, 1.6 HDi 16V** 10164 ▸ | D | 1560 | DV6ATED4, DV6TED4 | R134 | 09/04 ▸ 03/05 | 6455GH | **818171** | 568 361 | AL |
| **2.0 HDi** | D | 1997 | DW10TD | R134 | 03/01 ▸ 03/05 | 6455AA | **817524** | 518 367 | AL |
| **2.0 HDi** 10158 ▸ | D | 1997 | DW10TD | R134 | 08/04 ▸ 03/05 | 6455GK | **818170** | 568 361 | AL |
| **2.0 HDi** ▸ 10163 | D | 1997 | DW10ATED, DW10TD | R134 | 03/01 ▸ 09/04 | 6455AC | **817526** | 518 368 | AL |
| **2.0 HDi** 10164 ▸ | D | 1997 | DW10ATED, DW10TD | R134 | 09/04 ▸ 03/05 | 6455GH | **818171** | 568 361 | AL |

# PEUGEOT (.../...)

| | | CC | | | | OE | Valeo | DIM | TECH |
|---|---|---|---|---|---|---|---|---|---|
| **307 (2005>)** | | | | | | | | | |
| **1.4 i 16V** | E | 1360 | ET3J4 | +/ R134 | 06/05 ▸ | 6455GK | **818170** | 568 361 | AL |
| **1.4 i 16V** 11376 ▸ | E | 1360 | ET3J4 | +/ R134 | 01/08 ▸ | 6455GH | **818171** | 568 361 | AL |
| **1.6 i 16V** | E | 1587 | TU5JP4 | +/ R134 | 06/05 ▸ | 6455GK | **818170** | 568 361 | AL |
| **2.0 i 16V** | E | 1997 | EW10A, EW10J4 EW10J4S | +/ R134 | 06/05 ▸ | 6455GH | **818171** | 568 361 | AL |
| **1.6 HDi 16V** | D | 1560 | DV6ATED4, DV6TED4 | +/ R134 | 06/05 ▸ | 6455GH | **818171** | 568 361 | AL |
| **2.0 HDi 16V** | D | 1997 | DW10BTED4 | +/ R134 | 06/05 ▸ | 6455GH | **818171** | 568 361 | AL |
| **308** | | | | | | | | | |
| **1.4 VTi 16V** ▸ 11375 | E | 1397 | EP3 | +/ R134 | 09/07 ▸ | 6455CX | **818171** | 568 361 | AL |
| **1.6 THP 16V, 1.6 VTi 16V** 11376 ▸ | E | 1598 | EP6, EP6DT, EP6DTS | +/ R134 | 09/07 ▸ | 6455GH | **818171** | 568 361 | AL |
| **1.6 HDi 16V** ▸ 11375 | D | 1560 | DV6ATED4, DV6TED4 DV6TED4B | +/ R134 | 09/07 ▸ | 6455CX | **818171** | 568 361 | AL |
| **2.0 HDi 16V** | D | 1997 | DW10BTED4 | +/ R134 | 09/07 ▸ | 6455GH | **818171** | 568 361 | AL |
| **3008** | | | | | | | | | |
| **1.6 HDi 16V** | D | 1560 | DV6TED4 | +/ R134 | 09/09 ▸ | 6455GH | **818171** | 568 361 | AL |
| **405 (92>96)** | | | | | | | | | |
| **1.4, 1.4 i** | E | 1360 | TU3.2, TU3M, TU3MC | | 07/92 ▸ 10/95 | 6455R3 | **816835** | 554 328 | AL |
| **1.6, 1.6 i** | E | 1580 | XU52C, XU5JP, XU5M | | 07/92 ▸ 10/96 | 6455R3 | **816835** | 554 328 | AL |
| **1.8 i** | E | 1761 | XU7JP, XU7JPPR | | 07/92 ▸ 10/96 | 6455R3 | **816835** | 554 328 | AL |
| **1.9, 1.9 i** | E | 1905 | XU92C, XU9J2 | | 07/92 ▸ 10/96 | 6455R3 | **816835** | 554 328 | AL |
| **2.0 i, 2.0 i Turbo 16S** | E | 1998 | XU10J2/C, XU10J4/TE | | 07/92 ▸ 10/96 | 6455R3 | **816835** | 554 328 | AL |
| **1.7 TD** | D | 1769 | XUD7TE | | 07/93 ▸ 10/95 | 6455R3 | **816835** | 554 328 | AL |
| **1.9 D, 1.9 TD** | D | 1905 | XUD9A, XUD9TE | | 07/92 ▸ 10/96 | 6455R3 | **816835** | 554 328 | AL |
| **406 (95>)** | | | | | | | | | |
| **1.6 i** | E | 1580 | XU5JP | | 10/95 ▸ 03/04 | 6453JA | **817375** | 650 376 | AL |
| **1.8 i, 1.8 i 16V, 1.8 i GPL 16V** | E | 1761 | XU7JB, XU7JP, XU7JP4 | | 10/95 ▸ 04/04 | 6453JA | **817375** | 650 376 | AL |
| **2.0 i 16V, 2.0 i Turbo** | E | 1998 | XU10J2TE, XU10J4R | | 10/95 ▸ 04/04 | 6453JA | **817375** | 650 376 | AL |
| **3.0 i V6 24V** | E | 2946 | ES9J4, ES9J4S | | 10/96 ▸ 04/04 | 6453JA | **817375** | 650 376 | AL |
| **406 (95>99)** | | | | | | | | | |
| **1.9 TD** | D | 1905 | XUD9BSD, XUD9BTF XUD9SD, XUD9TE | | 11/95 ▸ 03/99 | 6453JA | **817375** | 650 376 | AL |
| **2.0 HDi** | D | 1997 | DW10ATED | | 10/98 ▸ 03/99 | 6453JA | **817375** | 650 376 | AL |
| **2.1 TD** | D | 2088 | XUD11BTE | | 11/95 ▸ 03/99 | 6453JA | **817375** | 650 376 | AL |
| **406 (99>)** | | | | | | | | | |
| **1.8 i 16V, 1.8 i GPL 16V** | E | 1749 | EW7J4 | +/ R134 | 10/00 ▸ 04/04 | 6455CQ | **817667** | 518 361 | AL |
| **2.0 HPi 16V, 2.0 i 16V** | E | 1997 | EW10D, EW10J4 | +/ R134 | 04/99 ▸ 04/04 | 6455CQ | **817667** | 518 361 | AL |
| **2.2 i 16V** | E | 2230 | EW12J4 | +/ R134 | 05/00 ▸ 04/04 | 6455CQ | **817667** | 518 361 | AL |
| **3.0 i V6 24V** | E | 2946 | ES9J4S | +/ R134 | 09/00 ▸ 04/04 | 6455CQ | **817667** | 518 361 | AL |
| **2.0 HDi** | D | 1997 | DW10ATED, DW10TD | +/ R134 | 04/99 ▸ 04/04 | 6455CQ | **817667** | 518 361 | AL |
| **2.2 HDi 16V** | D | 2179 | DW12TED4 | +/ R134 | 10/00 ▸ 04/04 | 6455CQ | **817667** | 518 361 | AL |
| **407** | | | | | | | | | |
| **1.8 i 16V** | E | 1749 | EW7J4 | +/ R134 | 04/04 ▸ | 6455FX | **817824** | 560 361 | AL |
| **2.0 i 16V** | E | 1997 | EW10J4 | +/ R134 | 04/04 ▸ | 6455FX | **817824** | 560 361 | AL |
| **2.2 i 16V** | E | 2230 | EW12J4 | +/ R134 | 04/04 ▸ | 6455FX | **817824** | 560 361 | AL |
| **3.0 i V6 24V** | E | 2946 | ES9A | +/ R134 | 04/04 ▸ | 6455FX | **817824** | 560 361 | AL |
| **1.6 HDi 16V** | D | 1560 | DV6TED4 | +/ R134 | 04/04 ▸ | 6455FX | **817824** | 560 361 | AL |
| **2.0 HDi 16V** | D | 1997 | DW10BTED4 | +/ R134 | 04/04 ▸ | 6455FX | **817824** | 560 361 | AL |
| **2.2 HDi 16V** | D | 2179 | DW12BTED4 | +/ R134 | 06/06 ▸ | 6455EY | **817740** | 669 303 | AL |
| **2.7 HDI V6 24V** | D | 2720 | DT17TED4 | +/ R134 | 10/05 ▸ | 6455FX | **817824** | 560 361 | AL |
| **2.2 HDi 16V** 11438 ▸ | D | 2179 | DW12BTED4 | | 03/08 ▸ | 6455GZ | **814173** | | AL |
| **2.7 HDi V6 24V** 11438 ▸ | D | 2720 | DT17BTED4 | | 03/08 ▸ | 6455GZ | **814173** | | AL |
| **4007** | | | | | | | | | |
| **2.4 i 16V** | E | 2360 | 4B12MMC | +/ R134 | 01/08 ▸ 06/09 | 6455FA | **814315** | 616 407 | AL |
| **2.2 HDi 16V** | D | 2179 | DW12MTED4 | +/ R134 | 07/07 ▸ 06/09 | 6455FA | **814315** | 616 407 | AL |

Condenser Condenseur Kondensator Condensatore Condensor Condensador КОНДЕНСЕР Kondenser Kondenzátor Condensator Συμπυκνωτής



• **New** Nouveau **Nuevo** Novo **Nuovo** Nieuw **Neu** Nowość **Yeni** Новый Νέο **Novy**

| | | CC | | | | OE | Valeo | DIM | TECH |
|---|---|---|---|---|---|---|---|---|---|

# PEUGEOT (.../...)

## 5008

| | | | | | | | | | |
|---|---|---|---|---|---|---|---|---|---|
| **1.6 THP 16V,1.6 VTi 120 16V** | E | 1598 | EP6, EP6C, EP6CDT | R134 | 09/09 ▸ | 6455GH | **818171** | 568 361 | AL |
| **1.6 HDi 16V** | D | 1560 | DV6TED4 | R134 | 09/09 ▸ | 6455GH | **818171** | 568 361 | AL |

## 605 (89>94)

| | | | | | | | | | |
|---|---|---|---|---|---|---|---|---|---|
| **2.0, 2.0 i, 2.0 i Turbo** | E | 1998 | XU102C, XU102C TR<br>XU10J2, XU10J2TE<br>XU10M | | 09/93 ▸ 06/94 | 6455Y6 | **816850** | 552 352 | AL |
| **3.0 i V6, 3.0 i V6 24V** | E | 2963 | ZPJ, ZPJ4 | | 09/93 ▸ 06/94 | 6455Y6 | **816850** | 552 352 | AL |
| **3.0 i V6, 3.0 i V6 24V** | E | 2975 | ZPJ, ZPJ4 | | 09/93 ▸ 06/94 | 6455Y6 | **816850** | 552 352 | AL |
| **2.1 TD Turbo** | D | 2088 | XUD11ATE, XUD11BTE | | 09/93 ▸ 06/94 | 6455Y6 | **816850** | 552 352 | AL |
| **2.1 D** | D | 2138 | XUD11A | | 09/93 ▸ 06/94 | 6455Y6 | **816850** | 552 352 | AL |

## 605 (94>99)

| | | | | | | | | | |
|---|---|---|---|---|---|---|---|---|---|
| **2.0, 2.0 i, 2.0 i 16V<br>2.0 i Turbo** | E | 1998 | XU102C TR, XU10J2<br>XU10J2CTE<br>XU10J2CTEL3<br>XU10J4R | | 07/94 ▸ 05/99 | 6455Y6 | **816850** | 552 352 | AL |
| **3.0 i V6 24V** | E | 2946 | ES9J4 | | 06/97 ▸ 05/99 | 6455Y6 | **816850** | 552 352 | AL |
| **3.0 i V6, 3.0 i V6 24V** | E | 2963 | ZPJ, ZPJ4 | | 07/94 ▸ 06/97 | 6455Y6 | **816850** | 552 352 | AL |
| **2.1 TD Turbo** | D | 2088 | XUD11ATE, XUD11BTE | | 07/94 ▸ 05/99 | 6455Y6 | **816850** | 552 352 | AL |
| **2.5 TD** | D | 2446 | DK5ATE | | 07/94 ▸ 05/99 | 6455Y6 | **816850** | 552 352 | AL |

## 607 (2000>2004)

| | | | | | | | | | |
|---|---|---|---|---|---|---|---|---|---|
| **2.0 i 16V** | E | 1997 | EW10J4 | R134 | 05/00 ▸ 09/04 | 6455CQ | **817667** | 518 361 | AL |
| **2.2 i 16V** | E | 2230 | EW12J4 | R134 | 05/00 ▸ 09/04 | 6455CQ | **817667** | 518 361 | AL |
| **3.0 i V6 24V** | E | 2946 | ES9J4S | R134 | 05/00 ▸ 09/04 | 6455AS | **817667** | 518 361 | AL |
| **2.0 HDi** | D | 1997 | DW10ATED | R134 | 05/00 ▸ 09/04 | 6455CQ | **817667** | 518 361 | AL |
| **2.2 HDi 16V** | D | 2179 | DW12TED4 | R134 | 05/00 ▸ 09/04 | 6455AS | **817667** | 518 361 | AL |

## 607 (2004>)

| | | | | | | | | | |
|---|---|---|---|---|---|---|---|---|---|
| **2.2 i 16V** | E | 2230 | EW12J4 | R134 | 10/04 ▸ | 6455CQ | **817667** | 518 361 | AL |
| **3.0 i V6 24V** | E | 2946 | ES9A | R134 | 10/04 ▸ | 6455CQ | **817667** | 518 361 | AL |
| **2.0 HDi** | D | 1997 | DW10ATED | R134 | 10/04 ▸ | 6455CQ | **817667** | 518 361 | AL |
| **2.2 HDi 16V** | D | 2179 | DW12BTED4, DW12TED4 | R134 | 10/04 ▸ | 6455CQ | **817667** | 518 361 | AL |
| **2.2 HDi 16V Auto** | D | 2179 | DW12BTED4 | R134 | 10/04 ▸ | 6455EY | **817740** | 669 303 | AL |
| **2.7 HDi 24V** | D | 2720 | DT17TED4 | R134 | 10/04 ▸ | 6455EY | **817740** | 669 303 | AL |

## 806 (94>98)

| | | | | | | | | | |
|---|---|---|---|---|---|---|---|---|---|
| **1.8 i** | E | 1761 | XU7JP | | 06/95 ▸ 09/98 | 6455Y3 | **816852** | 690 462 | AL |
| **2.0 i, 2.0 i Turbo** | E | 1998 | XU10J2C, XU10J2CTE<br>XU10J2CTEL3 | | 07/94 ▸ 09/98 | 6455Y3 | **816852** | 690 462 | AL |
| **1.9 TD** | D | 1905 | XUD9BTF, XUD9TE<br>XUD9TEF | | 08/94 ▸ 09/98 | 6455Y3 | **816852** | 690 462 | AL |
| **2.1 TD** | D | 2088 | XUD11BTE | | 06/96 ▸ 09/98 | 6455Y3 | **816852** | 690 462 | AL |

## 806 (98>2002)

| | | | | | | | | | |
|---|---|---|---|---|---|---|---|---|---|
| **1.8 i** | E | 1761 | XU7JP | | 10/98 ▸ 05/02 | 6455Y3 | **816852** | 690 462 | AL |
| **2.0 i 16V** | E | 1997 | EW10J4 | | 07/00 ▸ 05/02 | 6455Y3 | **816852** | 690 462 | AL |
| **2.0 i, 2.0 i 16V, 2.0 i Turbo CT** | E | 1998 | XU10J2C, XU10J2CTEL3<br>XU10J4R | | 10/98 ▸ 05/02 | 6455Y3 | **816852** | 690 462 | AL |
| **1.9 TD** | D | 1905 | XUD9BTF | | 10/98 ▸ 05/02 | 6455Y3 | **816852** | 690 462 | AL |
| **2.0 HDi, 2.0 HDi 16V** | D | 1997 | DW10ATED, DW10ATED4 | | 08/99 ▸ 05/02 | 6455Y3 | **816852** | 690 462 | AL |
| **2.1 TD** | D | 2088 | XUD11BTE | | 10/98 ▸ 05/02 | 6455Y3 | **816852** | 690 462 | AL |

## 807

| | | | | | | | | | |
|---|---|---|---|---|---|---|---|---|---|
| **2.0 i 16V** | E | 1997 | EW10J4 | R134 | 06/02 ▸ | 6455AP | **817579** | 560 450 | AL |
| **2.2 i 16V** | E | 2230 | EW12J4 | R134 | 06/02 ▸ 09/05 | 6455AP | **817579** | 560 450 | AL |
| **3.0 i V6 24V** | E | 2946 | ES9J4S | R134 | 06/02 ▸ 09/05 | 6455AQ | **817668** | 712 364 | AL |
| **2.0 HDi 16V** | D | 1997 | DW10ATED4 | R134 | 06/02 ▸ | 6455AP | **817579** | 560 450 | AL |
| **2.2 HDi 16V** | D | 2179 | DW12TED4 | R134 | 06/02 ▸ 02/04 | 6455AP | **817579** | 560 450 | AL |
| **2.2 HDi 16V** | D | 2179 | DW12BTED4 | | 12/07 ▸ | 6455FW | **814065** | 678 355 | AL |

## RCZ

| | | | | | | | | | |
|---|---|---|---|---|---|---|---|---|---|
| **1.6 THP 156 16V** | E | 1598 | EP6CDT | R134 | 05/10 ▸ | 6455GH | **818171** | 568 361 | AL |

| | | CC | | | | OE | Valeo | DIM | TECH |
|---|---|---|---|---|---|---|---|---|---|
| **PEUGEOT** | | | | | | | | | |
| **BIPPER** | | | | | | | | | |
| **1.4 i** | E | 1360 | TU3A,TU3AE5 | R134 | 12/07 ▸ | 6455GA | **818193** | 570 353 | AL |
| **1.3 HDi** | D | 1248 | F13DTE5 | R134 | 09/10 ▸ | 6455GA | **818193** | 570 353 | AL |
| **1.4 HDi** | D | 1398 | DV4TED | R134 | 12/07 ▸ | 6455GA | **818193** | 570 353 | AL |
| **BOXER (94>2001)** | | | | | | | | | |
| **2.0, 2.0 i** | E | 1998 | XU102CU, XU10J2U | | 02/94 ▸ 12/01 | 6455T3 | **818191** | 506 349 | AL |
| **1.9 D, 1.9 TD** | D | 1905 | XUD9A, XUD9AU<br>XUD9TEF, XUD9UTF | | 02/94 ▸ 12/01 | 6455T3 | **818191** | 506 349 | AL |
| **2.0 HDi** | D | 1997 | DW10TD | | 09/01 ▸ 12/01 | 6455T3 | **818191** | 506 349 | AL |
| **2.5 D, 2.5 TD, 2.5 TDi** | D | 2446 | DJ5, DJ5T, DJ5TED | | 02/94 ▸ 12/01 | 6455T3 | **818191** | 506 349 | AL |
| **2.8 D, 2.8 HDi, 2.8 TD** | D | 2798 | 8140-43, 8140-43S<br>8140-63 | | 06/99 ▸ 12/01 | 6455T3 | **818191** | 506 349 | AL |
| **BOXER (2002>)** | | | | | | | | | |
| **2.0 i** ▸ 17126575 | E | 1998 | XU10J2U | | 01/02 ▸ 09/02 | 6455T3 | **818191** | 506 349 | AL |
| **2.0 i** 17126576 ▸ 17520375 | E | 1998 | XU10J2U | | 04/02 ▸ | 6455CG | **818018** | 506 349 | AL |
| **2.0 i** 17520376 ▸ | E | 1998 | XU10J2U | R134 | 04/02 ▸ | 6455EC | **814081** | 568 341 | AL |
| **2.0 HDi** ▸ 17126575 | D | 1997 | DW10UTD | | 01/02 ▸ 09/02 | 6455T3 | **818191** | 506 349 | AL |
| **2.0 HDi** 17126576 ▸ 17520375 | D | 1997 | DW10UTD | | 04/02 ▸ | 6455CG | **818018** | 506 349 | AL |
| **2.0 HDi** 17520376 ▸ | D | 1997 | DW10UTD | R134 | 04/02 ▸ | 6455EC | **814081** | 568 341 | AL |
| **2.2 HDi** ▸ 17126575 | D | 2179 | DW12TED | | 01/02 ▸ 09/02 | 6455T3 | **818191** | 506 349 | AL |
| **2.2 HDi** 17126576 ▸ 17520375 | D | 2179 | DW12TED | | 04/02 ▸ | 6455CG | **818018** | 506 349 | AL |
| **2.2 HDi** 17520376 ▸ | D | 2179 | DW12TED | R134 | 04/02 ▸ | 6455EC | **814081** | 568 341 | AL |
| **2.8 HDi** ▸ 17126575 | D | 2798 | F28TDCR | | 01/02 ▸ 09/02 | 6455T3 | **818191** | 506 349 | AL |
| **2.8 HDi** ▸ 17520375 | D | 2798 | F28TDCR | | 04/02 ▸ | 6455CG | **818018** | 506 349 | AL |
| **2.8 HDi** 17520376 ▸ | D | 2798 | F28TDCR | R134 | 04/02 ▸ | 6455EC | **814081** | 568 341 | AL |
| **BOXER (2006>)** | | | | | | | | | |
| **2.2 HDi** | D | 2229 | 22DT | R134 | 07/06 ▸ | 6455EP | **814069** | 748 291 | AL |
| **2.2 HDi 16V** | D | 2229 | 22DT | | 07/06 ▸ | 6455EQ | **814085** | 710 375 | AL |
| **3.0 HDi** | D | 2999 | F30DT | R134 | 07/06 ▸ | 6455EP | **814069** | 748 291 | AL |
| **EXPERT (95>2003)** | | | | | | | | | |
| **1.6 i** | E | 1581 | 160A | | 09/95 ▸ 12/03 | 6455Y3 | **816852** | 690 462 | AL |
| **1.8 i** | E | 1761 | XU7JP | | 07/96 ▸ 12/03 | 6455Y3 | **816852** | 690 462 | AL |
| **2.0 i 16V** | E | 1997 | EW10J4 | | 09/00 ▸ 12/03 | 6455Y3 | **816852** | 690 462 | AL |
| **1.9 D** | D | 1868 | DW8, DW8B | | 05/98 ▸ 12/03 | 6455Y3 | **816852** | 690 462 | AL |
| **1.9 D, 1.9 TD** | D | 1905 | XUD9A, XUD9BTF<br>XUD9TEF | | 09/95 ▸ 12/03 | 6455Y3 | **816852** | 690 462 | AL |
| **2.0 HDi, 2.0 HDi 16V** | D | 1997 | DW10ATED, DW10ATED4<br>DW10BTED, DW10CTED | | 09/00 ▸ 12/03 | 6455Y3 | **816852** | 690 462 | AL |
| **EXPERT (2003>2006)** | | | | | | | | | |
| **2.0 i 16V** | E | 1997 | EW10J4 | | 01/04 ▸ 12/06 | 6455Y3 | **816852** | 690 462 | AL |
| **1.9 D** | D | 1868 | DW8B | | 01/04 ▸ 12/06 | 6455Y3 | **816852** | 690 462 | AL |
| **2.0 HDi, 2.0 HDi 16V** | D | 1997 | DW10ATED4, DW10BTED<br>DW10BTED+L4 | | 01/04 ▸ 12/06 | 6455Y3 | **816852** | 690 462 | AL |
| **EXPERT II (2007>)** | | | | | | | | | |
| **2.0 i 16V** | E | 1997 | EW10A | R134 | 01/07 ▸ | 6455AP | **817579** | 560 450 | AL |
| **PARTNER (96>2002)** | | | | | | | | | |
| **1.1 i** | E | 1124 | TU1M+ | | 06/96 ▸ 06/97 | 6455Q9 | **817230** | 568 341 | AL |
| **1.1 i, 1.1 i GPL** 07518 ▸ | E | 1124 | TU1JP, TU1M+ | | 06/97 ▸ 11/02 | 6455AV | **817230** | 568 341 | AL |

Condenser Condenseur Kondensator Condensatore Condensador Condensor Kondenser Kondenzátor Condensator Συμπυκνωτής ΚΟΝΔΕΝΣΕΡ



• **New** Nouveau **Nuevo** Novo **Nuovo** Nieuw **Neu** Nowość **Yeni** Новый Νέο **Novy**

| | | CC | | | | OE | Valeo | DIM | TECH |
|---|---|---|---|---|---|---|---|---|---|
| **PEUGEOT (.../...)** | | | | | | | | | |
| **PARTNER (96>2002) (.../...)** | | | | | | | | | |
| **1.4, 1.4 i** | E | 1360 | TU3.2, TU3JP | | 06/96 ▸ 06/97 | 6455Q9 | **817230** | 568 341 | AL |
| **1.4, 1.4 i, 1.4 i GPL** 07518 ▸ | E | 1360 | TU3.2, TU3JP | | 06/97 ▸ 11/02 | 6455AV | **817230** | 568 341 | AL |
| **1.6 i 16V** 07518 ▸ | E | 1587 | TU5JP4 | | 09/00 ▸ 11/02 | 6455AV | **817230** | 568 341 | AL |
| **1.8 i** | E | 1761 | XU7JB | | 05/97 ▸ 06/97 | 6455Q9 | **817230** | 568 341 | AL |
| **1.8 i** 07518 ▸ | E | 1761 | XU7JB | | 06/96 ▸ 11/02 | 6455AV | **817230** | 568 341 | AL |
| **1.8 D** ▸ 8721 | D | 1769 | XUD7 | | 06/96 ▸ 09/00 | 6455V8 | **816984** | 630 339 | AL |
| **1.8 D** 8721 ▸ | D | 1769 | XUD7 | | 09/00 ▸ 11/02 | 6455Y2 | **817042** | 630 339 | AL |
| **1.9 D** ▸ 8721 | D | 1868 | DW8, DW8B | | 10/98 ▸ 09/00 | 6455V8 | **816984** | 630 339 | AL |
| **1.9 D** 8721 ▸ | D | 1868 | DW8, DW8B | | 09/00 ▸ 11/02 | 6455Y2 | **817042** | 630 339 | AL |
| **1.9 D** ▸ 8721 | D | 1905 | XUD9A | | 06/96 ▸ 09/00 | 6455V8 | **816984** | 630 339 | AL |
| **1.9 D** 8721 ▸ | D | 1905 | XUD9A | | 09/00 ▸ 11/02 | 6455Y2 | **817042** | 630 339 | AL |
| **2.0 HDi** ▸ 8270 | D | 1997 | DW10TD | | 05/00 ▸ 09/00 | 6455V8 | **816984** | 630 339 | AL |
| **2.0 HDi** 8721 ▸ | D | 1997 | DW10TD | | 09/00 ▸ 11/02 | 6455Y2 | **817042** | 630 339 | AL |
| **PARTNER (2002>)** | | | | | | | | | |
| **1.1 i** | E | 1124 | TU1JP | R134 | 11/02 ▸ | 6455AT | **817508** | 518 364 | AL |
| **1.4 i** | E | 1360 | TU3JP | R134 | 11/02 ▸ | 6455CV | **817508** | 518 364 | AL |
| **1.6 i 16V** | E | 1587 | TU5JP4 | R134 | 11/02 ▸ | 6455CV | **817508** | 518 364 | AL |
| **1.6 HDi 16V** | D | 1560 | DV6ATED4, DV6BTED4 | R134 | 01/06 ▸ | 6455CN | **814080** | 520 363 | AL |
| **1.9 D** | D | 1868 | DW8B | R134 | 11/02 ▸ | 6455CV | **817508** | 518 364 | AL |
| **2.0 HDi** | D | 1997 | DW10TD | R134 | 11/02 ▸ | 6455CV | **817508** | 518 364 | AL |
| **PARTNER (2008>)** | | | | | | | | | |
| **1.6 i 16V** | E | 1587 | TU5JP4, TU5JP4B | R134 | 05/08 ▸ | 6455GK | **818170** | 568 361 | AL |
| **1.6 HDi 16V** | D | 1560 | DV6ATED4, DV6AUTED4 DV6BTED4, DV6BUTED4 DV6TED4 | R134 | 05/08 ▸ | 6455GK | **818170** | 568 361 | AL |
| **RANCH (96>2002)** | | | | | | | | | |
| **1.4 i** | E | 1360 | TU3JP | | 06/96 ▸ 06/97 | 6455Q9 | **817230** | 568 341 | AL |
| **1.4 i** | E | 1360 | TU3JP | | 06/97 ▸ 11/02 | 6455AV | **817230** | 568 341 | AL |
| **1.8 i** | E | 1761 | XU7JB | | 06/97 ▸ 07/97 | 6455Q9 | **817230** | 568 341 | AL |
| **1.8 i** | E | 1761 | XU7JB | | 07/97 ▸ 11/02 | 6455CV | **817230** | 568 341 | AL |
| **1.8 D** | D | 1769 | XUD7 | | 06/96 ▸ 07/99 | 6455V8 | **816984** | 630 339 | AL |
| **1.8 D** | D | 1769 | XUD7 | | 07/99 ▸ 11/02 | 6455Y2 | **817042** | 630 339 | AL |
| **1.9 D** | D | 1868 | DW8 | | 11/98 ▸ 07/99 | 6455V8 | **816984** | 630 339 | AL |
| **1.9 D** | D | 1868 | DW8 | | 07/99 ▸ 11/02 | 6455Y2 | **817042** | 630 339 | AL |
| **1.9 D** | D | 1905 | XUD9A | | 06/96 ▸ 07/99 | 6455V8 | **816984** | 630 339 | AL |
| **1.9 D** | D | 1905 | XUD9A | | 07/99 ▸ 11/02 | 6455Y2 | **817042** | 630 339 | AL |
| **RANCH (2002>)** | | | | | | | | | |
| **1.4 i** | E | 1360 | TU3JP | R134 | 11/02 ▸ | 6455CV | **817508** | 518 364 | AL |
| **1.9 D** | D | 1868 | DW8B | R134 | 11/02 ▸ | 6455CV | **817508** | 518 364 | AL |
| **2.0 HDi** | D | 1997 | DW10TD | R134 | 11/02 ▸ | 6455CV | **817508** | 518 364 | AL |
| **PORSCHE** | | | | | | | | | |
| **911 CARRERA (04>08)** | | | | | | | | | |
| **3.6 i 325** | E | 3596 | M96.05 | | 07/04 ▸ 06/08 | 99657311103 | **814167** | 360 271 | |
| **3.6 DFI 345 24V** | E | 3614 | MA1.02 | | 06/08 ▸ | 99657311103 | **814167** | 360 271 | |
| **3.8 DFI 385 24V,3.8 DFI 408 24V** | E | 3800 | MA1.01 | | 06/08 ▸ | 99657311103 | **814167** | 360 271 | |
| **3.8 i 355,3.8 i 381** | E | 3824 | M97.01,M97.01S | | 07/04 ▸ 06/08 | 99657311103 | **814167** | 360 271 | |
| **911 TURBO (06>09)** | | | | | | | | | |
| **3.6 i 480 24V,3.6 i 530 24V** | E | 3600 | M97.70,M97.70S | | 02/06 ▸ 12/09 | 99657311103 | **814167** | 360 271 | |

| | | CC | | | | OE | Valeo | DIM | TECH |
|---|---|---|---|---|---|---|---|---|---|
| **PORSCHE** (.../...) | | | | | | | | | |
| **997 GT3 (2006>)** | | | | | | | | | |
| **3.6 i 415 24V** | E | 3600 | M97.76 | | 02/06 ▸ 01/09 | 99657311103 | **814167** | 360 271 | |
| **3.8 i 450 24V** | E | 3797 | M97.77 | | 09/09 ▸ | 99657311103 | **814167** | 360 271 | |
| **3.8 i 435 24V** | E | 3800 | M97.77 | | 01/09 ▸ | 99657311103 | **814167** | 360 271 | |
| **BOXSTER (2004>2009)** | | | | | | | | | |
| **2.7 i 24V** | E | 2687 | M96.25,M97.20 | | 11/04 ▸ 11/08 | 99657311103 | **814167** | 360 271 | |
| **3.2 i 24V** | E | 3179 | M96.26 | | 11/04 ▸ 08/06 | 99657311103 | **814167** | 360 271 | |
| **3.4 i 24V** | E | 3387 | M97.21,M97.22 | | 07/06 ▸ 04/09 | 99657311103 | **814167** | 360 271 | |
| **BOXSTER (2008>)** | | | | | | | | | |
| **2.9 i 24V** | E | 2893 | MA1.20 | | 11/08 ▸ | 99657311103 | **814167** | 360 271 | |
| **3.4 i 24V** | E | 3436 | MA1.21,MA1.21C | | 11/08 ▸ | 99657311103 | **814167** | 360 271 | |
| **CAYENNE (2008>)** | | | | | | | | | |
| **2.9 i 265 24V** | E | 2893 | MA1.20C | | 11/08 ▸ | 99657311103 | **814167** | 360 271 | |
| **3.4 i 320 24V,3.4 i 330 24V** | E | 3436 | MA1.21C | | 11/08 ▸ | 99657311103 | **814167** | 360 271 | |
| **CAYMAN** | | | | | | | | | |
| **2.7 i** | E | 2687 | M97.20 | | 07/06 ▸ 11/08 | 99657311103 | **814167** | 360 271 | |
| **3.4 i** | E | 3387 | M97.21 | | 11/05 ▸ 11/08 | 99657311103 | **814167** | 360 271 | |
| **RENAULT** | | | | | | | | | |
| **R19** | | | | | | | | | |
| **1.8 16S, 1.8 i, 1.8 i 16S** | E | 1763 | F7P | | 07/88 ▸ 10/95 | 7700272488 | **816863** | 430 376 | AL |
| **1.9 D, 1.9 TD** | D | 1870 | F8Q | | 09/90 ▸ 10/95 | 7700272488 | **816863** | 430 376 | AL |
| **R21** | | | | | | | | | |
| **1.4** | E | 1397 | C2J, C2L | R12>R134a | 05/89 ▸ 01/94 | 7700840853 | **816866** | 610 278 | AL |
| **1.7, 1.7 i** | E | 1721 | F2N, F3N | R12>R134a | 03/86 ▸ | 7700840853 | **816866** | 610 278 | AL |
| **2.0** | E | 1965 | F2R | R12>R134a | 06/86 ▸ 03/92 | 7700840853 | **816866** | 610 278 | AL |
| **2.0, 2.0 i, 2.0 i Turbo** | E | 1995 | J6R, J6T, J7R | R12>R134a | 03/86 ▸ 01/94 | 7700840853 | **816866** | 610 278 | AL |
| **2.2, 2.2 i** | E | 2165 | J7T | R12>R134a | 06/86 ▸ 08/95 | 7700840853 | **816866** | 610 278 | AL |
| **1.9 D** | D | 1870 | F8Q | R12>R134a | 05/89 ▸ 03/93 | 7700840853 | **816866** | 610 278 | AL |
| **2.1 D, 2.1 TD** | D | 2068 | J8S | R12>R134a | 06/86 ▸ 08/95 | 7700840853 | **816866** | 610 278 | AL |
| **AVANTIME** | | | | | | | | | |
| **2.0 i Turbo 16V** | E | 1998 | F4R | | 11/01 ▸ 03/03 | 6025313367 | **818027** | 570 394 | AL |
| **3.0 i V6 24V** | E | 2946 | L7X | | 09/01 ▸ 03/03 | 6025313367 | **818027** | 570 394 | AL |
| **2.2 dCi 16V** | D | 2188 | G9T | | 02/02 ▸ 03/03 | 6025313367 | **818027** | 570 394 | AL |
| **CLIO II (98>2001)** | | | | | | | | | |
| **1.2 i, 1.2 i GPL** ▸ 991022 | E | 1149 | D7F | +/ R134 | 03/98 ▸ 10/99 | 7700414103 | **817171** | 510 376 | AL |
| **1.2 i, 1.2 i GPL** | E | 1149 | D7F | +/ R134 | 03/98 ▸ 03/01 | 8200106950 | **817428** | 514 376 | AL |
| **1.4 i, 1.4 i 16V** | E | 1390 | E7J, K4J | +/ R134 | 03/98 ▸ 03/01 | 7700414103 | **817171** | 510 376 | AL |
| **1.4 i 16V** | E | 1390 | K4J | +/ R134 | 09/99 ▸ 03/01 | 8200106950 | **817428** | 514 376 | AL |
| **1.6 i, 1.6 i 16V** | E | 1598 | K4M, K7M | +/ R134 | 03/98 ▸ 03/01 | 7700414103 | **817171** | 510 376 | AL |
| **1.6 i 16V** 991022 ▸ | E | 1598 | K4M | +/ R134 | 07/98 ▸ 03/01 | 8200106950 | **817428** | 514 376 | AL |
| **2.0 i 16V** | E | 1998 | F4R | +/ R134 | 01/00 ▸ 03/01 | 7700414103 | **817171** | 510 376 | AL |
| **1.9 D, 1.9 dTi** | D | 1870 | F8Q, F9Q | +/ R134 | 03/98 ▸ 03/01 | 7700414103 | **817171** | 510 376 | AL |
| **1.9 dTi** 991022 ▸ | D | 1870 | F9Q | +/ R134 | 11/99 ▸ 03/01 | 8200106950 | **817428** | 514 376 | AL |
| **CLIO II (2001>2005)** | | | | | | | | | |
| **1.0 i** | E | 999 | D7D | +/ R134 | 04/01 ▸ | 8200106950 | **817428** | 514 376 | AL |
| **1.2 i, 1.2 i 16V** | E | 1149 | D4F, D7F | +/ R134 | 04/01 ▸ | 8200106950 | **817428** | 514 376 | AL |
| **1.2 i, 1.2 i 16V** | E | 1149 | D4F | +/ R134 / Multi-Exchanger | 03/02 ▸ | 8200211563 | **733075** | 480 414 | AL |
| **1.4 i, 1.4 i 16V** ▸ 030324 | E | 1390 | E7J, K4J, K7J | +/ R134 | 04/01 ▸ | 8200106950 | **817428** | 514 376 | AL |
| **1.4 i, 1.4 i 16V** | E | 1390 | K4J | +/ R134 / Multi-Exchanger | 03/02 ▸ | 8200211563 | **733075** | 480 414 | AL |
| **1.6 i** | E | 1598 | K7M | +/ R134 | 04/01 ▸ | 7700414103 | **817171** | 510 376 | AL |
| **1.6 i 16V** | E | 1598 | K4M | +/ R134 | 04/01 ▸ | 8200106950 | **817428** | 514 376 | AL |
| **1.6 i, 1.6 i 16V** | E | 1598 | K4M | +/ R134 / Multi-Exchanger | 03/02 ▸ | 8200211563 | **733075** | 480 414 | AL |
| **2.0 i 16V** | E | 1998 | F4R | +/ R134 | 04/01 ▸ | 7700414103 | **817171** | 510 376 | AL |
| **1.5 dCi** | D | 1461 | K9K | 50KW | 04/01 ▸ | 7700436062 | **817602** | 510 380 | AL |

Condenser Condenseur Kondensator Condensatore Condensor Condensador КОНДЕНСЕР Kondenser Kondenzátor Condensator Συμπυκνωτής



• **New** Nouveau **Nuevo** Novo **Nuovo** Nieuw **Neu** Nowość **Yeni** Новый Νέο **Novy**

# RENAULT (.../...)

| | | CC | | | | OE | Valeo | DIM | TECH |
|---|---|---|---|---|---|---|---|---|---|
| **CLIO II (2001>2005) (.../...)** | | | | | | | | | |
| **1.5 dCi** ▸ 020215 | D | 1461 | K9K | +/- R134 | 04/01 ▸ | 8200106950 | **817428** | 514 376 | AL |
| **1.5 dCi** | D | 1461 | K9K | 74KW | 01/04 ▸ | 8200245598 | **817646** | 587 405 | AL |
| **1.9 D** | D | 1870 | F8Q | +/- R134 | 04/01 ▸ | 7700414103 | **817171** | 510 376 | AL |
| **1.9 dTi** | D | 1870 | F9Q | +/- R134 | 04/01 ▸ | 8200106950 | **817428** | 514 376 | AL |
| **CLIO III (2005>)** | | | | | | | | | |
| **1.6 i 16V** | E | 1598 | K4M | +/- R134 | 09/05 ▸ | 8200443897 | **818165** | 510 377 | AL |
| **2.0 i 16V** | E | 1998 | M4R | +/- R134 | 09/06 ▸ | 8200443897 | **818165** | 510 377 | AL |
| **1.5 dCi** | D | 1461 | K9K.7.72 | +/- R134 | 09/05 ▸ | 8200468911 | **818166** | 547 377 | AL |
| **ESPACE III (96>2000)** | | | | | | | | | |
| **2.0 i** | E | 1998 | F3R | | 10/96 ▸ 06/00 | 7700876215 | **816867** | 558 391 | AL |
| **2.0 i, 2.0 i 16V** | E | 1998 | F4R | | 10/97 ▸ 10/02 | 6025313325 | **818029** | 660 384 | AL |
| **3.0 i V6** | E | 2963 | Z7X | | 10/96 ▸ 06/98 | 7700876215 | **816867** | 558 391 | AL |
| **3.0 i V6** | E | 2946 | L7X | | 07/98 ▸ 06/00 | 7700876215 | **816867** | 558 391 | AL |
| **1.9 dTi** | D | 1870 | F9Q | | 01/99 ▸ 06/00 | 6025310510 | **818028** | 570 393 | AL |
| **2.2 dT** ▸ 971001 | D | 2188 | G8T | | 10/96 ▸ | 7701204731 | **816839** | 540 391 | AL |
| **2.2 dT** | D | 2188 | G8T | | 10/97 ▸ 06/00 | 6025306732 | **818030** | 625 338 | AL |
| **ESPACE III (2000>2002)** | | | | | | | | | |
| **2.0 i 16V** | E | 1998 | F4R | | 07/00 ▸ 10/02 | 6025313325 | **818029** | 660 384 | AL |
| **3.0 i V6** | E | 2946 | L7X | | 07/00 ▸ 10/02 | 7700876215 | **816867** | 558 391 | AL |
| **1.9 dTi** | D | 1870 | F9Q | | 07/00 ▸ 10/02 | 6025310510 | **818028** | 570 393 | AL |
| **2.2 dCi** | D | 2188 | G9T | | 07/00 ▸ 10/02 | 6025313367 | **818027** | 570 394 | AL |
| **ESPACE IV (2002>2006)** | | | | | | | | | |
| **2.0 i 16V, 2.0 i Turbo 16V** ▸ 040317 | E | 1998 | F4R | | 09/02 ▸ 03/04 | 8200033733 | **817731** | 660 431 | AL |
| **2.0 i 16V, 2.0 i Turbo 16V** 040317 ▸ | E | 1998 | F4R | | 03/04 ▸ 02/06 | 8200332851 | **814007** | 698 431 | AL |
| **3.5 i V6 24V** ▸ 040317 | E | 3498 | V4Y | | 09/02 ▸ 03/04 | 8200033733 | **817731** | 660 431 | AL |
| **3.5 i V6 24V** 040317 ▸ | E | 3498 | V4Y | | 03/04 ▸ 02/06 | 8200332851 | **814007** | 698 431 | AL |
| **1.9 dCi** ▸ 040317 | D | 1870 | F9Q | | 09/02 ▸ 03/04 | 8200033733 | **817731** | 660 431 | AL |
| **1.9 dCi** 040317 ▸ | D | 1870 | F9Q | | 03/04 ▸ 02/06 | 8200332851 | **814007** | 698 431 | AL |
| **2.2 dCi 16V** ▸ 040317 | D | 2188 | G9T | | 09/02 ▸ 03/04 | 8200033733 | **817731** | 660 431 | AL |
| **2.2 dCi 16V** 040317 ▸ | D | 2188 | G9T | | 03/04 ▸ 02/06 | 8200332851 | **814007** | 698 431 | AL |
| **3.0 dCi 24V** ▸ 040317 | D | 2958 | P9X | | 09/02 ▸ 03/04 | 8200033733 | **817731** | 660 431 | AL |
| **3.0 dCi 24V** 040317 ▸ | D | 2958 | P9X | | 03/04 ▸ 02/06 | 8200332851 | **814007** | 698 431 | AL |
| **ESPACE IV (2006>)** | | | | | | | | | |
| **2.0 i 16V, 2.0 i Turbo 16V** | E | 1998 | F4R | | 03/06 ▸ | 8200332851 | **814007** | 698 431 | AL |
| **3.5 i V6 24V** | E | 3498 | V4Y | | 03/06 ▸ | 8200332851 | **814007** | 698 431 | AL |
| **2.0 dCi 16V** | D | 1995 | M9R | | 03/06 ▸ | 8200332851 | **814007** | 698 431 | AL |
| **2.2 dCi 16V** | D | 2188 | G9T | | 03/06 ▸ | 8200332851 | **814007** | 698 431 | AL |
| **3.0 dCi 24V** | D | 2958 | P9X | | 03/06 ▸ | 8200332851 | **814007** | 698 431 | AL |
| **FLUENCE ÉLECTRIQUE** | | | | | | | | | |
| **?** | | | ALL | | 05/11 ▸ | 921001367R | **814188** | 652 488 | AL |
| **LAGUNA (94>98)** | | | | | | | | | |
| **1.8** | E | 1794 | F3P | | 01/94 ▸ 04/98 | 7701038227 | **816867** | 558 391 | AL |
| **2.0 S 16V** | E | 1948 | N7Q | | 05/95 ▸ 04/98 | 7701038227 | **816867** | 558 391 | AL |
| **2.0** | E | 1998 | F3R | | 01/94 ▸ 04/98 | 7701038227 | **816867** | 558 391 | AL |
| **3.0 V6** | E | 2946 | L7X | | 05/97 ▸ 04/98 | 7701038227 | **816867** | 558 391 | AL |
| **3.0 V6** | E | 2963 | Z7X | | 01/94 ▸ 04/98 | 7701038227 | **816867** | 558 391 | AL |
| **2.2 D** | D | 2188 | G8T | | 03/94 ▸ 04/98 | 7701038227 | **816867** | 558 391 | AL |
| **2.2 Dt** | D | 2188 | G8T | | 03/96 ▸ 04/98 | 7701204731 | **816839** | 540 391 | AL |

# RENAULT (.../...)

| | | CC | | | | OE | Valeo | DIM | TECH |
|---|---|---|---|---|---|---|---|---|---|
| **LAGUNA (98>2000)** | | | | | | | | | |
| **1.6 i 16V** | E | 1598 | K4M | | 05/98 ▸ 12/00 | 7701045346 | **818008** | 595 362 | AL |
| **1.8 i 16V** | E | 1783 | F4P | | 09/98 ▸ 12/00 | 7701045346 | **818008** | 595 362 | AL |
| **1.8 i** | E | 1794 | F3P | | 09/99 ▸ 12/00 | 7701038227 | **816867** | 558 391 | AL |
| **2.0 i 16V** | E | 1948 | N7Q | | 05/98 ▸ 12/00 | 7701038227 | **816867** | 558 391 | AL |
| **2.0 i** | E | 1998 | F3R | 83KW | 05/98 ▸ 12/00 | 7701045346 | **818008** | 595 362 | AL |
| **2.0 i, 2.0 i 16V** | E | 1998 | F4R | 103KW | 05/98 ▸ 12/00 | 7701038227 | **816867** | 558 391 | AL |
| **3.0 i V6** | E | 2946 | L7X | | 05/98 ▸ 12/00 | 7701038227 | **816867** | 558 391 | AL |
| **1.9 dCi, 1.9 dTi** | D | 1870 | F9Q | | 05/98 ▸ 12/00 | 7701045346 | **818008** | 595 362 | AL |
| **2.2 dT** | D | 2188 | G8T | | 05/98 ▸ 12/00 | 7701204731 | **816839** | 540 391 | AL |
| **LAGUNA II (2001>)** | | | | | | | | | |
| **1.6 i 16V** | E | 1598 | K4M | | 01/01 ▸ | 8200008763 | **817568** | 698 391 | AL |
| **1.8 i 16V** | E | 1783 | F4P | | 01/01 ▸ | 8200008763 | **817568** | 698 391 | AL |
| **2.0 i 16V, 2.0 ide 16V** | E | 1998 | F4R, F5R | | 01/01 ▸ | 8200008763 | **817568** | 698 391 | AL |
| **3.0 i V6 24V** | E | 2946 | L7X | | 01/01 ▸ | 8200008763 | **817568** | 698 391 | AL |
| **1.9 dCi** | D | 1870 | F9Q | | 01/01 ▸ | 8200008763 | **817568** | 698 391 | AL |
| **2.2 dCi 16V** | D | 2188 | G9T | | 01/01 ▸ | 8200008763 | **817568** | 698 391 | AL |
| **LAGUNA II (2005>)** | | | | | | | | | |
| **1.6 i 16V** | E | 1598 | K4M | | 03/05 ▸ | 8200332852 | **814006** | 660 390 | AL |
| **1.8 i 16V** | E | 1783 | F4P | | 03/05 ▸ | 8200332852 | **814006** | 660 390 | AL |
| **2.0 i 16V, 2.0 i Turbo 16V** | E | 1998 | F4R, F5R | | 03/05 ▸ | 8200332852 | **814006** | 660 390 | AL |
| **3.0 i V6 24V** | E | 2946 | L7X | | 03/05 ▸ | 8200332852 | **814006** | 660 390 | AL |
| **1.9 dCi** | D | 1870 | F9Q | | 03/05 ▸ | 8200332852 | **814006** | 660 390 | AL |
| **2.0 dCi, 2.0 dCi 16V** | D | 1995 | M9R | | 07/05 ▸ | 8200332852 | **814006** | 660 390 | AL |
| **2.2 dCi, 2.2 dCi 16V** | D | 2188 | G9T | | 03/05 ▸ | 8200332852 | **814006** | 660 390 | AL |
| **MEGANE (95>99)** | | | | | | | | | |
| **1.4 i** | E | 1390 | E7J | | 11/95 ▸ 02/99 | 7700432391 | **816912** | 537 348 | AL |
| **1.4 i 16V** | E | 1390 | K4J | | 09/98 ▸ 02/99 | 7700432392 | **817197** | 534 388 | AL |
| **1.6 i** | E | 1598 | K7M | | 11/95 ▸ 02/99 | 7700432391 | **816912** | 537 348 | AL |
| **1.6 i 16V** | E | 1598 | K4M | | 06/98 ▸ 02/99 | 7700432392 | **817197** | 534 388 | AL |
| **2.0 i, 2.0 i 16V** ▸ 980507 | E | 1998 | F3R, F7R | | 11/95 ▸ 05/98 | 7700432391 | **816912** | 537 348 | AL |
| **2.0 i 16V, 2.0 ide 16V** 980507 ▸ | E | 1998 | F5R, F7R | | 05/98 ▸ 02/99 | 7700432392 | **817197** | 534 388 | AL |
| **1.9 D, 1.9 dT, 1.9 dTi** | D | 1870 | F8Q, F9Q | | 11/95 ▸ 02/99 | 7700432391 | **816912** | 537 348 | AL |
| **MEGANE (99>)** | | | | | | | | | |
| **1.4 i, 1.4 i 16V** | E | 1390 | E7J, K4J | | 10/98 ▸ | 7700432392 | **817197** | 534 388 | AL |
| **1.6 i, 1.6 i 16V** | E | 1598 | K4M, K7M | | 10/98 ▸ | 7700432392 | **817197** | 534 388 | AL |
| **1.8 i 16V** | E | 1783 | F4P | | 10/99 ▸ | 7700432392 | **817197** | 534 388 | AL |
| **2.0 i 16V, 2.0 ide 16V** | E | 1998 | F5R, F7R | | 02/99 ▸ 09/02 | 7700432392 | **817197** | 534 388 | AL |
| **2.0 i 16V** | E | 1998 | F4R | | 11/01 ▸ | 8200182361 | **817701** | 538 388 | AL |
| **1.9 D** ▸ 990226 | D | 1870 | F8Q | | 10/98 ▸ 02/99 | 7700432391 | **816912** | 537 348 | AL |
| **1.9 D, 1.9 dCi, 1.9 dTi** | D | 1870 | F8Q, F9Q | | 10/98 ▸ | 7700432392 | **817197** | 534 388 | AL |
| **MEGANE SCENIC (96>99)** | | | | | | | | | |
| **1.4 i** | E | 1390 | E7J | | 10/96 ▸ 06/98 | 7700432391 | **816912** | 537 348 | AL |
| **1.4 i, 1.4 i 16V** | E | 1390 | E7J, K4J | | 07/98 ▸ 09/99 | 7700432392 | **817197** | 534 388 | AL |
| **1.4 i 16V** | E | 1390 | K4J | | 02/99 ▸ 09/99 | 7700434383 | **817509** | 538 381 | AL |
| **1.6 i** | E | 1598 | K7M | | 10/96 ▸ 05/98 | 7700432391 | **816912** | 537 348 | AL |
| **1.6 i** 980507 ▸ | E | 1598 | K7M | | 05/98 ▸ 09/99 | 7700432392 | **817197** | 534 388 | AL |
| **2.0 i** ▸ 980507 | E | 1998 | F3R | | 10/96 ▸ 05/98 | 7700432391 | **816912** | 537 348 | AL |
| **2.0 i** | E | 1998 | F3R | | 05/98 ▸ 09/99 | 7700432392 | **817197** | 534 388 | AL |
| **1.9 D, 1.9 dT, 1.9 dTi** | D | 1870 | F8Q, F9Q | | 10/96 ▸ 09/99 | 7700432391 | **816912** | 537 348 | AL |
| **1.9 dTi** | D | 1870 | F9Q | | 04/97 ▸ 09/99 | 7700434383 | **817509** | 538 381 | AL |
| **1.9 D, 1.9 dT, 1.9 dTi** 980507 ▸ | D | 1870 | F8Q, F9Q | | 05/98 ▸ 09/99 | 7700432392 | **817197** | 534 388 | AL |
| **MEGANE SCENIC (99>2003)** | | | | | | | | | |
| **1.4 i 16V** ▸ 010716 | E | 1390 | K4J | | 09/99 ▸ 07/01 | 7700434383 | **817509** | 538 381 | AL |
| **1.4 i 16V** 010716 ▸ | E | 1390 | K4J | | 07/01 ▸ 04/03 | 8200182361 | **817701** | 538 388 | AL |

Condenser Condenseur Kondensator Condensatore Condensor Condensador КОНДЕНСЕР Kondenser Kondenzátor Condensator Συμπυκνωτής



• **New** Nouveau **Nuevo** Novo **Nuovo** Nieuw **Neu** Nowość **Yeni** Новый Νέο **Novy**

| | | CC | | | | OE | Valeo | DIM | TECH |
|---|---|---|---|---|---|---|---|---|---|

# RENAULT (.../...)

## MEGANE SCENIC (99>2003) (.../...)

| | | | | | | | | | |
|---|---|---|---|---|---|---|---|---|---|
| **1.6 i 16V** ▸010716 | E | 1598 | K4M | | 09/99 ▸ 07/01 | 7700434383 | **817509** | 538 381 | AL |
| **1.6 i 16V** 010716 ▸ | E | 1598 | K4M | | 07/01 ▸ 04/03 | 8200182361 | **817701** | 538 388 | AL |
| **1.8 i 16V** ▸010716 | E | 1783 | F4P | | 09/99 ▸ 07/01 | 7700434383 | **817509** | 538 381 | AL |
| **1.8 i 16V** 010716 ▸ | E | 1783 | F4P | | 07/01 ▸ 04/03 | 8200182361 | **817701** | 538 388 | AL |
| **2.0 i 16V** | E | 1998 | F4R | | 09/99 ▸ 03/01 | 7700432392 | **817197** | 534 388 | AL |
| **2.0 i 16V** ▸010716 | E | 1998 | F4R | | 09/99 ▸ 07/01 | 7700434383 | **817509** | 538 381 | AL |
| **2.0 i 16V** 010716 ▸ | E | 1998 | F4R | | 07/01 ▸ 04/03 | 8200182361 | **817701** | 538 388 | AL |
| **1.9 dCi, 1.9 dTi** ▸010716 | D | 1870 | F9Q | | 09/99 ▸ 07/01 | 7700434383 | **817509** | 538 381 | AL |
| **1.9 dCi, 1.9 dTi** 010716 ▸ | D | 1870 | F9Q | | 07/01 ▸ 04/03 | 8200182361 | **817701** | 538 388 | AL |

## MEGANE II

| | | | | | | | | | |
|---|---|---|---|---|---|---|---|---|---|
| **1.4 i 16V** | E | 1390 | K4J | | 09/02 ▸ | 8200115543 | **817608** | 615 396 | AL |
| **1.6 i 16V** | E | 1598 | K4M | | 09/02 ▸ | 8200115543 | **817608** | 615 396 | AL |
| **2.0 i 16V, 2.0 i Turbo 16V** | E | 1998 | F4R | | 09/02 ▸ | 8200115543 | **817608** | 615 396 | AL |
| **1.5 dCi** | D | 1461 | K9K | | 09/02 ▸ | 8200115543 | **817608** | 615 396 | AL |
| **1.9 dCi** | D | 1870 | F9Q | | 09/02 ▸ | 8200115543 | **817608** | 615 396 | AL |
| **2.0 dCi** | D | 1995 | M9R | | 01/06 ▸ | 8200325004 | **818002** | 626 414 | AL |

## MEGANE III

| | | | | | | | | | |
|---|---|---|---|---|---|---|---|---|---|
| **1.4 TCe 130 16V** | E | 1397 | H4J | | 04/09 ▸ 09/10 | 921100001R | **814094** | 652 350 | AL |
| **1.6 i 100 16V, 1.6 i 110 16V** | E | 1598 | K4M | | 10/08 ▸ 09/10 | 921100001R | **814094** | 652 350 | AL |
| **2.0 i 140 16V** | E | 1997 | M4R | | 10/08 ▸ 09/10 | 921100001R | **814094** | 652 350 | AL |
| **2.0 TCe 180 16V** | E | 1998 | F4R | | 10/08 ▸ 09/10 | 921100001R | **814094** | 652 350 | AL |
| **1.5 dCi 105, 1.5 dCi 110**<br>**1.5 dCi 85, 1.5 dCi 90** | D | 1461 | K9K | | 10/08 ▸ 09/10 | 921100001R | **814094** | 652 350 | AL |
| **1.9 dCi 130** | D | 1870 | F9Q | | 10/08 ▸ 09/10 | 921100001R | **814094** | 652 350 | AL |
| **2.0 dCi 150, 2.0 dCi 160** | D | 1995 | M9R | | 10/08 ▸ 09/10 | 921100001R | **814094** | 652 350 | AL |
| **1.4 TCe 130 16V** | E | 1397 | H4J | | 10/10 ▸ | 921000294R | **814187** | 652 349 | AL |
| **1.6 i 100 16V, 1.6 i 110 16V** | E | 1598 | K4M | | 10/10 ▸ | 921000294R | **814187** | 652 349 | AL |
| **2.0 i 140 16V** | E | 1997 | M4R | | 10/10 ▸ | 921000294R | **814187** | 652 349 | AL |
| **2.0 TCe 180 16V** | E | 1998 | F4R | | 10/10 ▸ | 921000294R | **814187** | 652 349 | AL |
| **1.5 dCi 105, 1.5 dCi 110**<br>**1.5 dCi 85, 1.5 dCi 90** | D | 1461 | K9K | | 10/10 ▸ | 921000294R | **814187** | 652 349 | AL |
| **1.9 dCi 130** | D | 1870 | F9Q | | 10/10 ▸ | 921000294R | **814187** | 652 349 | AL |
| **2.0 dCi 150, 2.0 dCi 160** | D | 1995 | M9R | | 10/10 ▸ | 921000294R | **814187** | 652 349 | AL |

## SAFRANE

| | | | | | | | | | |
|---|---|---|---|---|---|---|---|---|---|
| **2.0 Si, 2.0 i** | E | 1995 | J7R | +/ R134 | 05/92 ▸ 06/95 | 7701205214 | **816987** | 530 437 | AL |
| **2.0 Si, 2.0 i** | E | 1995 | J7R | +/ R134 | 06/95 ▸ 09/96 | 7701204955 | **816756** | 530 437 | AL |
| **2.2 Si, 2.2 i** | E | 2165 | J7T | +/ R134 | 05/92 ▸ 06/95 | 7701205214 | **816987** | 530 437 | AL |
| **2.2 Si, 2.2 i** | E | 2165 | J7T | +/ R134 | 06/95 ▸ 09/96 | 7701204955 | **816756** | 530 437 | AL |
| **3.0 i V6, 3.0 i V6i**<br>**3.0 i V6i Biturbo** | E | 2975 | Z7X | +/ R134 | 05/92 ▸ 06/95 | 7701205214 | **816987** | 530 437 | AL |
| **3.0 i V6, 3.0 i V6i**<br>**3.0 i V6i Biturbo** | E | 2975 | Z7X | +/ R134 | 06/95 ▸ 09/96 | 7701204955 | **816756** | 530 437 | AL |
| **2.1 Dt** | D | 2068 | J8S | +/ R134 | 06/95 ▸ 09/96 | 7701204841 | **817061** | 530 437 | AL |
| **2.1 Dt** | D | 2068 | J8S | +/ R134 | 06/95 ▸ 09/96 | 7701039742 | **816865** | 530 437 | AL |
| **2.5 Dt** | D | 2445 | S8U | +/ R134 | 04/93 ▸ 09/96 | 7701204841 | **817061** | 530 437 | AL |
| **2.5 Dt** | D | 2445 | S8U | +/ R134 | 04/93 ▸ 09/96 | 7701039742 | **816865** | 530 437 | AL |

## SCENIC II

| | | | | | | | | | |
|---|---|---|---|---|---|---|---|---|---|
| **1.4 i 16V** | E | 1390 | K4J | | 05/03 ▸ | 8200115543 | **817608** | 615 396 | AL |
| **1.6 i 16V** | E | 1598 | K4M | | 05/03 ▸ | 8200115543 | **817608** | 615 396 | AL |
| **2.0 i 16V, 2.0 i Turbo 16V** | E | 1998 | F4R | | 05/03 ▸ | 8200115543 | **817608** | 615 396 | AL |
| **1.5 dCi** | D | 1461 | K9K | | 05/03 ▸ | 8200115543 | **817608** | 615 396 | AL |
| **1.9 dCi** | D | 1870 | F9Q | | 05/03 ▸ | 8200115543 | **817608** | 615 396 | AL |
| **2.0 dCi** | D | 1995 | M9R | | 01/06 ▸ | 8200325004 | **818002** | 626 414 | AL |

## SCENIC III

| | | | | | | | | | |
|---|---|---|---|---|---|---|---|---|---|
| **1.4 TCE 130 16V** | E | 1397 | H4J | | 04/09 ▸ | 921100001R | **814094** | 652 350 | AL |

| | | CC | | | | OE | Valeo | DIM | TECH |
|---|---|---|---|---|---|---|---|---|---|
| **RENAULT** (.../...) | | | | | | | | | |
| **SCENIC III** (.../...) | | | | | | | | | |
| **1.6 i 110 16V** | E | 1598 | K4M | | 04/09 ▸ | 921100001R | **814094** | 652 350 | AL |
| **1.5 dCi 105, 1.5 dCi 110 1.5 dCi 85** | D | 1461 | K9K | | 04/09 ▸ | 921100001R | **814094** | 652 350 | AL |
| **1.9 dCi 130** | D | 1870 | F9Q | | 04/09 ▸ | 921100001R | **814094** | 652 350 | AL |
| **2.0 dCi 150, 2.0 dCi 160** | D | 1995 | M9R | | 04/09 ▸ | 921100001R | **814094** | 652 350 | AL |
| **2.0 i 140 16V** | E | 1997 | M4R | | 04/09 ▸ | 921100001R | **814094** | 652 350 | AL |
| **SYMBOLE-THALIA (2008>)** | | | | | | | | | |
| **1.2 i 16V** | E | 1149 | D4F | +/ R134 | 10/08 ▸ | 8200757789 | **817428** | 514 376 | |
| **1.4 i,1.4 i 16V** | E | 1390 | K4J,K7J | +/ R134 | 10/08 ▸ | 8200757789 | **817428** | 514 376 | |
| **1.6 i,1.6 i 16V** | E | 1598 | K4M,K7M | +/ R134 | 10/08 ▸ | 8200757789 | **817428** | 514 376 | |
| **1.5 dCi** | D | 1461 | K9K | +/ R134 | 10/08 ▸ | 8200757789 | **817428** | 514 376 | |
| **THALIA (2008>)** | | | | | | | | | |
| **1.2 i 16V** | E | 1149 | D4F | +/ R134 | 10/08 ▸ | 8200757789 | **817428** | 514 376 | |
| **1.4 i 16V** | E | 1390 | K4J | +/ R134 | 10/08 ▸ | 8200757789 | **817428** | 514 376 | |
| **1.6 i 16V** | E | 1598 | K4M | +/ R134 | 10/08 ▸ | 8200757789 | **817428** | 514 376 | |
| **1.5 dCi** | D | 1461 | K9K | +/ R134 | 10/08 ▸ | 8200757789 | **817428** | 514 376 | |
| **TWINGO (93>98)** | | | | | | | | | |
| **1.2 i** 980430 ▸ | E | 1149 | D7F | | 05/98 ▸ 08/98 | 7700428315 | **817799** | 418 391 | AL |
| **TWINGO II (98>2007)** | | | | | | | | | |
| **1.2 i, 1.2 i 16V** | E | 1149 | D4F, D7F | | 09/98 ▸ | 7700433077 | **817799** | 418 391 | AL |
| **TWINGO III (2007>)** | | | | | | | | | |
| **1.2 i, 1.2 i 16V** | E | 1149 | D4F, D7F | +/ R134 | 07/07 ▸ | 8200448252 | **814061** | 513 396 | AL |
| **VEL SATIS (2002>2005)** | | | | | | | | | |
| **2.0 i Turbo 16V** | E | 1998 | F4R | | 01/02 ▸ 01/05 | 8200152728 | **817568** | 698 391 | AL |
| **3.5 i V6 24V** | E | 3498 | V4Y | | 01/02 ▸ 01/05 | 8200152728 | **817568** | 698 391 | AL |
| **2.2 dCi 16V** | D | 2188 | G9T | | 01/02 ▸ 01/05 | 8200152728 | **817568** | 698 391 | AL |
| **3.0 dCi V6** | D | 2958 | P9X | | 01/02 ▸ 01/05 | 8200152728 | **817568** | 698 391 | AL |
| **VEL SATIS (2005>)** | | | | | | | | | |
| **2.0 i Turbo 16V** | E | 1998 | F4R | | 02/05 ▸ | 8200332852 | **814006** | 660 390 | AL |
| **3.5 i V6 24V** | E | 3498 | V4Y | | 02/05 ▸ | 8200332852 | **814006** | 660 390 | AL |
| **2.0 dCi FAP 16V** | D | 1995 | M9R | | 01/06 ▸ | 8200332852 | **814006** | 660 390 | AL |
| **2.2 dCi 16V** | D | 2188 | G9T | | 02/05 ▸ | 8200332852 | **814006** | 660 390 | AL |
| **3.0 dCi V6 24V** | D | 2958 | P9X | | 02/05 ▸ | 8200332852 | **814006** | 660 390 | AL |
| **RENAULT** | | | | | | | | | |
| **KANGOO (97>2003)** | | | | | | | | | |
| **1.2 i** 991217 ▸ | E | 1149 | D7F | +/ R134 | 03/98 ▸ 02/03 | 8200106950 | **817428** | 514 376 | AL |
| **1.4 i** 991217 ▸ | E | 1390 | E7J | +/ R134 | 02/99 ▸ 02/03 | 8200106950 | **817428** | 514 376 | AL |
| **1.6 i 16V** | E | 1598 | K4M | +/ R134 | 01/02 ▸ 02/03 | 8200106950 | **817428** | 514 376 | AL |
| **KANGOO (2003>)** | | | | | | | | | |
| **1.2 i** | E | 1149 | D7F | +/ R134 | 03/03 ▸ | 8200106950 | **817428** | 514 376 | AL |
| **1.2 i, 1.2 i 16V** | E | 1149 | D4F, D7F | +/ R134 | 03/03 ▸ | 8200708130 | **817661** | 550 380 | AL |
| **1.4 i** | E | 1390 | K7J | +/ R134 | 03/03 ▸ | 8200708130 | **817661** | 550 380 | AL |
| **1.6 i 16V** | E | 1598 | K4M | +/ R134 | 03/03 ▸ | 8200708130 | **817661** | 550 380 | AL |
| **1.6 i 16V** | E | 1598 | K4M | +/ R134 | 03/03 ▸ 09/03 | 8200106950 | **817428** | 514 376 | AL |
| **1.5 dCi** | D | 1461 | K9K | | 03/03 ▸ | 8200137650 | **817687** | 504 340 | AL |
| **1.5 dCi** | D | 1461 | K9K | +/ R134 | 03/03 ▸ | 8200708130 | **817661** | 550 380 | AL |
| **1.9 D, 1.9 dCi, 1.9 dTi** | D | 1870 | F8Q, F9Q | +/ R134 | 03/03 ▸ | 8200708128 | **817662** | 550 380 | AL |
| **MASCOTT** | | | | | | | | | |
| **2.8 TD, 2.8 dti** | D | 2800 | 8140-43C, 8140-43S | | 07/99 ▸ | 5010382644 | **817379** | 510 437 | AL |
| **MASTER (97>2003)** | | | | | | | | | |
| **1.9 dCi, 1.9 dTi** ▸ 030131 | D | 1870 | F9Q | | 02/01 ▸ 01/03 | 7701052120 | **817742** | 690 376 | AL |

Condenser Condenseur Kondensator Condensatore Condensor Condensador КОНДЕНСЕР Kondenser Kondenzátor Condensator Συμπυκνωτής



• **New** Nouveau **Nuevo** Novo **Nuovo** Nieuw **Neu** Nowość **Yeni** Новый Νέο **Novy**

| | | CC | | | | OE | Valeo | DIM | TECH |
|---|---|---|---|---|---|---|---|---|---|
| **RENAULT (.../...)** | | | | | | | | | |
| **MASTER (97>2003) (.../...)** | | | | | | | | | |
| **1.9 dCi, 1.9 dTi** 030131 ▸ | D | 1870 | F9Q | | 01/03 ▸ 11/03 | 7701049665 | **817601** | 690 376 | AL |
| **1.9 dCi** | D | 1870 | F9Q | | 11/03 ▸ | 7701057122 | **817689** | 694 381 | AL |
| **2.2 dCi** | D | 2188 | G9T | | 11/00 ▸ 09/03 | 7701049665 | **817601** | 690 376 | AL |
| **2.5 D** | D | 2445 | S8U | | 09/97 ▸ 09/03 | 7701044406 | **817065** | 690 376 | AL |
| **2.5 dCi** | D | 2463 | G9U | | 12/00 ▸ 09/03 | 7701049665 | **817601** | 690 376 | AL |
| **2.5 dCi** | D | 2463 | G9U | | 12/00 ▸ 09/03 | 7701052120 | **817742** | 690 376 | AL |
| **MASTER (2003>)** | | | | | | | | | |
| **1.9 dCi** | D | 1870 | F9Q | | 10/03 ▸ | 7701057122 | **817689** | 694 381 | AL |
| **2.2 dCi** | D | 2188 | G9T | | 10/03 ▸ | 7701057122 | **817689** | 694 381 | AL |
| **2.5 dCi** | D | 2463 | G9U | | 10/03 ▸ | 7701057122 | **817689** | 694 381 | AL |
| **3.0 dCi** | D | 2953 | ZD3 | | 10/03 ▸ | 7701057122 | **817689** | 694 381 | AL |
| **MASTER (2006>)** | | | | | | | | | |
| **2.5 dCi 114, 2.5 dCi 100** | D | 2463 | G9U | | 06/06 ▸ | 7701057122 | **817689** | 694 381 | AL |
| **2.5 dCi 146** | D | 2463 | G9U | | 06/06 ▸ | 7701066110 | **814003** | 694 377 | AL |
| **MASTER (2010 >)** | | | | | | | | | |
| **2.3 dCi** | D | 2298 | M9T.6.70/76/78/80/90/92/94/98 | | 04/10 ▸ | 921005824R | **814179** | 760 350 | AL |
| **MODUS** | | | | | | | | | |
| **1.5 dCi** | D | 1461 | K9K.7.72 | +R134 | 01/08 ▸ | 8200688392 | **818166** | 547 377 | AL |
| **TRAFIC (2001>)** | | | | | | | | | |
| **2.0 i 16V** | E | 1998 | F4R | | 04/01 ▸ | 7700312901 | **817577** | 574 437 | AL |
| **2.0 i 16V** | E | 1998 | F4R | | 04/01 ▸ | 8200073912 | **817644** | 573 442 | AL |
| **1.9 dCi** | D | 1870 | F9Q | | 04/01 ▸ | 7700312901 | **817577** | 574 437 | AL |
| **1.9 dCi** | D | 1870 | F9Q | | 04/01 ▸ | 8200073912 | **817644** | 573 442 | AL |
| **2.5 dCi 16V** | D | 2463 | G9U | | 09/02 ▸ | 8200019382 | **817645** | 658 411 | AL |
| **TRAFIC (2006>)** | | | | | | | | | |
| **2.0 i 16V** | E | 1998 | F4R | | 07/06 ▸ | 8200465490 | **814172** | 545 440 | AL |
| **2.5 dCi** | D | 2464 | G9U | | 07/06 ▸ | 8200774211 | **814171** | | AL |
| **RENAULT TRUCKS** | | | | | | | | | |
| **AE** | | | | | | | | | |
| **380, 385TI** | D | 12000 | MIDR063540 | | 01/90 ▸ | 5000752789 | **816962** | 759 406 | |
| **390** | D | | E7 | | 01/90 ▸ | 5000752789 | **816962** | 759 406 | |
| **420TI** | D | 12000 | MIDR063540 | | 01/92 ▸ | 5000752789 | **816962** | 759 406 | |
| **430, 470** | D | | E7 | | 01/92 ▸ | 5000752789 | **816962** | 759 406 | |
| **500, 520, 560** | D | | E9 | | 01/90 ▸ | 5000752789 | **816962** | 759 406 | |
| **500, 520, 560** | D | | EE9 | | 01/92 ▸ | 5000752789 | **816962** | 759 406 | |
| **KERAX** | | | | | | | | | |
| **255** | D | | | | 12/98 ▸ | 5010315281 | **816980** | 590 462 | |
| **260** | D | | MIDR062045 | | 12/98 ▸ | 5010315281 | **816980** | 590 462 | |
| **260** | D | | | | 12/98 ▸ | 5010315281 | **816980** | 590 462 | |
| **298** | D | | | | 12/98 ▸ | 5010315281 | **816980** | 590 462 | |
| **338** | D | | | | 12/98 ▸ | 5010315281 | **816980** | 590 462 | |
| **340** | D | | | | 12/98 ▸ | 5010315281 | **816980** | 590 462 | |
| **380** | D | | | | 12/98 ▸ | 5010315281 | **816980** | 590 462 | |
| **MAGNUM** | | | | | | | | | |
| **400, 440, 480** | D | 12000 | MACK E.TECH A/46-B/46-C/46 | | 05/00 ▸ | 5010315372 | **818172** | | AL |
| **MASCOTT I** | | | | | | | | | |
| **2.8 TD, 2.8 dti** | D | 2800 | 8140-43C, 8140-43S | | 07/99 ▸ | 5010382644 | **817379** | 510 437 | |
| **PREMIUM** | | | | | | | | | |
| **210** | D | 6200 | MIDR060226 | | 06/96 ▸ 06/97 | 5010230214 | **816980** | 590 462 | |
| **210** | D | 6200 | MIDR060226 | | 06/97 ▸ | 5010315281 | **816980** | 590 462 | |
| **250** | D | 6200 | MIDR062026 | | 06/96 ▸ 06/97 | 5010230214 | **816980** | 590 462 | |
| **250** | D | 6200 | MIDR062026 | | 06/97 ▸ | 5010315281 | **816980** | 590 462 | |
| **260** | D | 9800 | MIDR062045C4 | | 06/96 ▸ 06/97 | 5010230214 | **816980** | 590 462 | |
| **260** | D | 9800 | MIDR062045C4 | | 06/97 ▸ | 5010315281 | **816980** | 590 462 | |

| | | CC | | | | OE | Valeo | DIM | TECH |
|---|---|---|---|---|---|---|---|---|---|
| **RENAULT TRUCKS (.../...)** | | | | | | | | | |
| **PREMIUM (.../...)** | | | | | | | | | |
| **260** | D | 9800 | MIDR062045C4 | | 06/96 ▸ 06/97 | 5010230214 | **816980** | 590 462 | |
| **260** | D | 9800 | MIDR062045C4 | | 06/97 ▸ | 5010315281 | **816980** | 590 462 | |
| **300** | D | 9800 | MIDR062045D41 | | 06/96 ▸ 06/97 | 5010230214 | **816980** | 590 462 | |
| **300** | D | 9800 | MIDR062045D41 | | 06/97 ▸ | 5010315281 | **816980** | 590 462 | |
| **300** | D | 9800 | MIDR062045 | | 06/96 ▸ 06/97 | 5010230214 | **816980** | 590 462 | |
| **300** | D | 9800 | MIDR062045 | | 06/97 ▸ | 5010315281 | **816980** | 590 462 | |
| **340** | D | 9800 | MIDR062045 | | 06/96 ▸ 06/97 | 5010230214 | **816980** | 590 462 | |
| **340** | D | 9800 | MIDR062045 | | 06/97 ▸ | 5010315281 | **816980** | 590 462 | |
| **340** | D | 9800 | MIDR062045 | | 06/96 ▸ 06/97 | 5010230214 | **816980** | 590 462 | |
| **340** | D | 9800 | MIDR062045 | | 06/97 ▸ | 5010315281 | **816980** | 590 462 | |
| **385** | D | 11000 | MIDR02356 | | 06/96 ▸ 06/97 | 5010230214 | **816980** | 590 462 | |
| **385** | D | 11000 | MIDR02356 | | 06/97 ▸ | 5010315281 | **816980** | 590 462 | |
| **385** | D | 11000 | MIDR02356 | | 06/96 ▸ 06/97 | 5010230214 | **816980** | 590 462 | |
| **385** | D | 11000 | MIDR02356 | | 06/97 ▸ | 5010315281 | **816980** | 590 462 | |
| **ROVER** | | | | | | | | | |
| **25 (99>)** | | | | | | | | | |
| **1.4 i 16V** | E | 1396 | 14K4F4 | | 12/99 ▸ | JRB100310 | **816921** | 570 294 | AL |
| **1.6 i 16V** | E | 1588 | 16K4F4 | | 12/99 ▸ | JRB100310 | **816921** | 570 294 | AL |
| **1.8 i 16V** | E | 1796 | 18K16, 18K4 | | 12/99 ▸ | JRB100310 | **816921** | 570 294 | AL |
| **2.0 D** | D | 1996 | 20T2N | | 12/99 ▸ | JRB100310 | **816921** | 570 294 | AL |
| **25 (2004>)** | | | | | | | | | |
| **1.1 i 16V** | E | 1119 | 11K4F4 | | 08/04 ▸ | JRB100310 | **816921** | 570 294 | AL |
| **2.0 Di** | D | 1994 | 20T2N | | 08/04 ▸ | JRB100310 | **816921** | 570 294 | AL |
| **45 (2000>2004)** | | | | | | | | | |
| **1.4 i 16V** | E | 1396 | 14K4F4 | | 01/00 ▸ 05/04 | JRB100310 | **816921** | 570 294 | AL |
| **1.6 i 16V** | E | 1589 | 16K4F4 | | 01/00 ▸ 05/04 | JRB100310 | **816921** | 570 294 | AL |
| **1.8 i 16V** | E | 1796 | 18K4F | | 01/00 ▸ 05/04 | JRB100310 | **816921** | 570 294 | AL |
| **2.0 i V6 24V** | E | 1997 | 20K6F | | 01/00 ▸ 05/04 | JRB100310 | **816921** | 570 294 | AL |
| **2.0 iDT** | D | 1994 | 20T2N | | 01/00 ▸ 05/04 | JRB100310 | **816921** | 570 294 | AL |
| **200 (89>95)** | | | | | | | | | |
| **214** | E | 1396 | 14K2D, 14K4F4 | | 10/92 ▸ 11/95 | JRB100190 | **818031** | 330 330 | AL |
| **216** | E | 1590 | D16A8, D16A9, D16Z2 | | 10/92 ▸ 11/95 | JRB100190 | **818031** | 330 330 | AL |
| **200 (95>99)** | | | | | | | | | |
| **214** | E | 1396 | 14K2F, 14K4F4 | | 11/95 ▸ 11/99 | JRB100310 | **816921** | 570 294 | AL |
| **216** | E | 1589 | 16K4F4 | | 11/95 ▸ 11/99 | JRB100310 | **816921** | 570 294 | AL |
| **220** | E | 1796 | 18K16 | | 10/96 ▸ 11/99 | JRB100310 | **816921** | 570 294 | AL |
| **220 D** | D | 1994 | 20T2N, 20T2R | | 11/95 ▸ 11/99 | JRB100310 | **816921** | 570 294 | AL |
| **Cabriolet, Coupé** | E | 1589 | 16K4F4 | | 03/96 ▸ | JRB100310 | **816921** | 570 294 | AL |
| **Coupé** | E | 1796 | 18K4K | | 03/96 ▸ | JRB100310 | **816921** | 570 294 | AL |
| **400 (90>95)** | | | | | | | | | |
| **414** | E | 1396 | 14K4F4 | | 10/92 ▸ 04/95 | JRB100190 | **818031** | 330 330 | AL |
| **416** | E | 1590 | D16A7, D16Z2 | | 10/92 ▸ 04/95 | JRB100190 | **818031** | 330 330 | AL |
| **400 (95>)** | | | | | | | | | |
| **414** | E | 1396 | 14K4F4 | | 05/95 ▸ 03/00 | JRB100310 | **816921** | 570 294 | AL |
| **416** | E | 1589 | 16K4F4 | | 05/95 ▸ 03/00 | JRB100310 | **816921** | 570 294 | AL |
| **420** | E | 1994 | 20T4H | | 11/95 ▸ 03/00 | JRB100310 | **816921** | 570 294 | AL |
| **420 D** | D | 1994 | 20T2N, 20T2R | | 11/95 ▸ 03/00 | JRB100310 | **816921** | 570 294 | AL |
| **600** | | | | | | | | | |
| **618** | E | 1850 | F18A3 | N | 03/96 ▸ 06/00 | JRB100180 | **817781** | 605 310 | AL |
| **620** | E | 1997 | F20Z1,F20Z2 | N | 04/93 ▸ 06/00 | JRB100180 | **817781** | 605 310 | AL |
| **623** | E | 2259 | H23A3 | N | 10/93 ▸ 06/00 | JRB100180 | **817781** | 605 310 | AL |
| **SAAB** | | | | | | | | | |
| **900 (79>93)** | | | | | | | | | |
| **2.0,2.0 T Turbo,2.0 T Turbo 16V 2.0 i,2.0 i 16V** | E | 1985 | B201C,B201I,B201S B201T,B202I,B202L B202S | | 08/85 ▸ 06/93 | 4382396 | **814317** | 603 307 | AL |

Condenser Condenseur Kondensator Condensatore Condensor Condensador КОНДЕНСЕР Kondenser Kondenzátor Condensator Συμπυκνωτής



• **New** Nouveau **Nuevo** Novo **Nuovo** Nieuw **Neu** Nowość **Yeni** Новый Νέο **Novy**

| | | CC | | | | OE | Valeo | DIM | TECH |
|---|---|---|---|---|---|---|---|---|---|
| **SAAB (.../...)** | | | | | | | | | |
| **900 (93>)** | | | | | | | | | |
| **2.0 16V, 2.0 Turbo** | E | 1985 | B204I, B204L, B206I | | 07/93 ▸ 02/98 | 4634937 | **817507** | 506 328 | AL |
| **2.3 16V** | E | 2290 | B234I | | 07/93 ▸ 02/98 | 4634937 | **817507** | 506 328 | AL |
| **2.5 V6** | E | 2498 | B258I | | 07/93 ▸ 02/98 | 4634937 | **817507** | 506 328 | AL |
| **9-3 (2002>)** | | | | | | | | | |
| **1.8 t Turbo 16V, 2.0 T Turbo 16V** | E | 1998 | B207E, B207L, B207R | R134 | 09/02 ▸ | 12793296 | **817711** | 625 412 | AL |
| **1.9 TiD 16V** | D | 1910 | Z19DT, Z19DTH | R134 | 06/04 ▸ | 13114943 | **817809** | 619 417 | AL |
| **1.9 TiD 16V** | D | 1910 | Z19DT, Z19DTH | R134 | 06/04 ▸ | 12804660 | **818175** | 625 412 | AL |
| **2.2 TiD 16V** | D | 2171 | D223L-125 | R134 | 09/02 ▸ | 12793295 | **817712** | 625 412 | AL |
| **9-5 (2001>2004)** | | | | | | | | | |
| **2.0 i Turbo 16V** ▸ 33017759 | E | 1985 | B205E-D4, B205E-E2 | | 09/01 ▸ 01/03 | 5048350 | **814000** | 586 358 | AL |
| **2.3 T Turbo 16V, 2.3 i Turbo 16V** ▸ 33017759 | E | 2290 | B235-D4/E2<br>B235L-D4/E2 | | 09/01 ▸ 01/03 | 5048350 | **814000** | 586 358 | AL |
| **3.0 i V6 Turbo 24V** ▸ 33017759 | E | 2962 | B308E | | 09/01 ▸ 01/03 | 5048350 | **814000** | 586 358 | AL |
| **2.2 TiD** ▸ 33017759 | D | 2171 | D223L | | 02/02 ▸ 01/03 | 5048350 | **814000** | 586 358 | AL |
| **3.0 TiD V6** ▸ 33017759 | D | 2962 | D308L | | 01/02 ▸ | 5048350 | **814000** | 586 358 | AL |
| **9-5 (2005>)** | | | | | | | | | |
| **2.0 i Turbo 16V** | E | 1985 | B205E-E4 | | 02/06 ▸ | 5048491 | **814000** | 586 358 | AL |
| **2.0 i Turbo 16V** | F | 1985 | B205L-FF | | 02/06 ▸ | 5048491 | **814000** | 586 358 | AL |
| **SCANIA** | | | | | | | | | |
| **SERIES -P,G,R,T** | | | | | | | | | |
| **P 310, R 310** | | 8867 | DC 9.13, DC 9.16<br>DC 9.11, DC 9.18 | | 09/04 ▸ | 1446258 | **818988** | 720 358 | AL |
| **R 500** | | 15600 | DC 16.04, DC 16.19 | | 09/04 ▸ | 1446258 | **818988** | 720 358 | AL |
| **P420** | | 11716 | DC 12.14, DC 12.15<br>DT 12.12 | | 09/04 ▸ | 1446258 | **818988** | 720 358 | AL |
| **SEAT** | | | | | | | | | |
| **ALHAMBRA** | | | | | | | | | |
| **1.8 i 20V** | E | 1781 | AJH | | 05/98 ▸ 05/00 | 7M0820413F | **816948** | 544 366 | AL |
| **1.8 i Turbo 20V** 7M-3-530 001 ▸ 7M-4-510 000 | E | 1781 | AWC | R134 | 06/00 ▸ | 7M3820411D | **818004** | 554 361 | AL |
| **2.0 i** | E | 1984 | ADY | | 03/96 ▸ 05/00 | 7M0820413F | **816948** | 544 366 | AL |
| **2.0 i** 7M-4-510 001 ▸ | E | 1984 | ATM | R134 | 06/00 ▸ | 7M3820411D | **818004** | 554 361 | AL |
| **2.8 i VR6 24V** ▸ 7M-3-530 000 | E | 2792 | AUE, AYL | R134 | 06/00 ▸ | 7M3820411D | **818004** | 554 361 | AL |
| **1.9 TDi** | D | 1896 | 1Z, AFN, AHU | | 03/96 ▸ 05/00 | 7M0820413F | **816948** | 544 366 | AL |
| **1.9 TDi** 7M-3-530 001 ▸ 7M-4-510 000 | D | 1896 | ANU, ASZ, AUY | R134 | 06/00 ▸ | 7M3820411D | **818004** | 554 361 | AL |
| **ALTEA** | | | | | | | | | |
| **1.4 i 16V** | E | 1390 | BXW | R134 | 05/06 ▸ 12/06 | 1K0820411H | **817777** | 584 401 | AL |
| **1.6 i** | E | 1595 | BGU, BSE, BSF | R134 | 03/04 ▸ | 1K0820411H | **817777** | 584 401 | AL |
| **1.8 TFSi 16V** | E | 1798 | BYT | R134 | 10/06 ▸ | 1K0820411H | **817777** | 584 401 | AL |
| **2.0 FSi 16V, 2.0 TFSi 16V** | E | 1984 | BLY,BVY,BVZ,BWA<br>BLR | R134 | 05/04 ▸ | 1K0820411H | **817777** | 584 401 | AL |
| **1.9 TDi** | D | 1896 | BKC, BJB, BLS | R134 | 04/04 ▸ | 1K0820411H | **817777** | 584 401 | AL |
| **2.0 TDi 16V** | D | 1968 | BKD, AZV, BMN, BMN | R134 | 03/04 ▸ | 1K0820411H | **817777** | 584 401 | AL |
| **AROSA** | | | | | | | | | |
| **1.0 i** | E | 999 | AHT, ALD, ANV, AUC | | 11/99 ▸ | 6X0820413A | **817247** | 350 358 | AL |
| **1.4 i, 1.4 i 16V** 6H-Y-003 901 ▸ | E | 1390 | AKK, AFK, ANW, AQQ<br>AUB/D | | 10/99 ▸ | 6X0820413A | **817247** | 350 358 | AL |
| **1.4 TDi** | D | 1422 | AMF | | 10/99 ▸ | 6X0820413 | **817246** | 390 369 | AL |
| **CORDOBA (93>96)** | | | | | | | | | |
| **1.4 i** | E | 1390 | AEX | | 09/95 ▸ 06/96 | 6K0820413B | **816908** | 550 350 | AL |
| **1.4 i** | E | 1391 | ABD | | 11/93 ▸ 11/95 | 6K0820413B | **816908** | 550 350 | AL |

# SEAT (.../...)

## CORDOBA (93>96) (.../...)

| | | CC | | | | OE | Valeo | DIM | TECH |
|---|---|---|---|---|---|---|---|---|---|
| **1.6 i** | E | 1595 | 1F | | 11/93 ▸ 06/96 | 6K0820413B | **816908** | 550 350 | AL |
| **1.6 i** | E | 1598 | AFT, ABU | | 11/93 ▸ 06/96 | 6K0820413B | **816908** | 550 350 | AL |
| **1.8 i, 1.8 i 16V** | E | 1781 | ADL, ABS, ACC, ADZ | | 11/93 ▸ 06/96 | 6K0820413B | **816908** | 550 350 | AL |
| **2.0 i** | E | 1984 | AGG, 2E | | 11/93 ▸ 06/96 | 6K0820413B | **816908** | 550 350 | AL |
| **1.9 D, 1.9 SDi, 1.9 TD** | D | 1896 | AAZ, 1Y, AEY | | 11/93 ▸ 06/96 | 6K0820413B | **816908** | 550 350 | AL |

## CORDOBA (96>99)

| | | | | | | | | | |
|---|---|---|---|---|---|---|---|---|---|
| **1.0 i** | E | 999 | AER | | 06/97 ▸ 04/99 | 6K0820413B | **816908** | 550 350 | AL |
| **1.4 i, 1.4 i 16V** | E | 1390 | AEX, AFH, AKV, ANX APQ | | 07/96 ▸ 05/99 | 6K0820413B | **816908** | 550 350 | AL |
| **1.6 i** | E | 1595 | 1F | | 07/96 ▸ 05/99 | 6K0820413B | **816908** | 550 350 | AL |
| **1.6 i** | E | 1598 | AFT, AEE, ALM | | 07/96 ▸ 05/99 | 6K0820413B | **816908** | 550 350 | AL |
| **1.8 i** | E | 1781 | ACC, ADZ | | 07/96 ▸ 05/99 | 6K0820413B | **816908** | 550 350 | AL |
| **2.0 i, 2.0 i 16V** | E | 1984 | AGG, ABF | | 07/96 ▸ 04/99 | 6K0820413B | **816908** | 550 350 | AL |
| **1.9 D, 1.9 SDi, 1.9 TD, 1.9 TDi** | D | 1896 | AHU, 1Y/Z, AAZ, AEY AFN | | 07/96 ▸ 05/99 | 6K0820413B | **816908** | 550 350 | AL |

## CORDOBA (99>2002)

| | | | | | | | | | |
|---|---|---|---|---|---|---|---|---|---|
| **1.0 i, 1.0 i 16V** ▸ 6K-1-242 000 | E | 999 | ALD, ANV, AST, AUC AVZ | | 08/99 ▸ 08/02 | 6K0820411 | **817245** | 588 361 | AL |
| **1.4 i, 1.4 i 16V** ▸ 6K-1-242 000 | E | 1390 | AUB, AKK, ANW, APE AQQ, AUD | | 05/99 ▸ 08/02 | 6K0820411 | **817245** | 588 361 | AL |
| **1.6 i** 6K-1-242 001 ▸ | E | 1595 | AEH, AKL, APF, AUR | | 05/99 ▸ 08/02 | 6K0820411A | **817245** | 588 361 | AL |
| **1.6 i** 6K-1-242 001 ▸ | E | 1598 | ALM | | 05/99 ▸ 08/02 | 6K0820411A | **817245** | 588 361 | AL |
| **1.8 i Turbo 20V** ▸ 6K-1-242 000 | E | 1781 | AQX | | 12/99 ▸ 08/02 | 6K0820411 | **817245** | 588 361 | AL |
| **1.9 SDi, 1.9 TDi** ▸ 6K-1-242 000 | D | 1896 | ALH, AGP, AGR, AQM ASV | | 03/99 ▸ 08/02 | 6K0820411 | **817245** | 588 361 | AL |

## CORDOBA (2002>)

| | | | | | | | | | |
|---|---|---|---|---|---|---|---|---|---|
| **1.2 i 12V** | E | 1198 | AZQ | R134 | 10/02 ▸ 04/04 | 6Q0820411K | **817686** | 468 361 | AL |
| **1.4 i 16V** | E | 1390 | BBY, BBZ, BKY | R134 | 09/02 ▸ | 6Q0820411K | **817686** | 468 361 | AL |
| **1.6 i** | E | 1598 | BAH | R134 | 04/03 ▸ | 6Q0820411K | **817686** | 468 361 | AL |
| **2.0 i** | E | 1984 | AZL, BBX | R134 | 09/02 ▸ | 6Q0820411K | **817686** | 468 361 | AL |
| **1.4 TDi** | D | 1422 | AMF | R134 | 10/02 ▸ | 6Q0820411K | **817686** | 468 361 | AL |
| **1.9 SDi, 1.9 TDi** | D | 1896 | ASZ, ASY, ATD | R134 | 09/02 ▸ | 6Q0820411K | **817686** | 468 361 | AL |

## IBIZA (93>99)

| | | | | | | | | | |
|---|---|---|---|---|---|---|---|---|---|
| **1.05, 1.05 i** | E | 1043 | AAU | | 02/93 ▸ 06/96 | 6K0820413B | **816908** | 550 350 | AL |
| **1.3 i** | E | 1272 | AAV, 2G | | 02/93 ▸ 07/94 | 6K0820413B | **816908** | 550 350 | AL |
| **1.4 i, 1.4 i 16V** | E | 1390 | AEX, AFH, AKV, ANX APQ | | 07/95 ▸ 01/99 | 6K0820413B | **816908** | 550 350 | AL |
| **1.4 i** | E | 1391 | ABD | | 09/93 ▸ 06/96 | 6K0820413B | **816908** | 550 350 | AL |
| **1.6 i** | E | 1595 | 1F | | 07/94 ▸ 01/99 | 6K0820413B | **816908** | 550 350 | AL |
| **1.6 i** | E | 1598 | AFT, ABU, AEE, ALM | | 09/93 ▸ 01/99 | 6K0820413B | **816908** | 550 350 | AL |
| **1.8 i** | E | 1781 | ADZ, ABS, ACC, ADL | | 02/93 ▸ 01/99 | 6K0820413B | **816908** | 550 350 | AL |
| **2.0 i, 2.0 i 16V** | E | 1984 | AGG, 2E, ABF | | 02/93 ▸ 01/99 | 6K0820413B | **816908** | 550 350 | AL |
| **1.9 D, 1.9 SDI, 1.9 TD, 1.9 TDi** | D | 1896 | 1Y/Z, AAZ, AEY, AFN AHU | | 02/93 ▸ 01/99 | 6K0820413B | **816908** | 550 350 | AL |

## IBIZA (99>2001)

| | | | | | | | | | |
|---|---|---|---|---|---|---|---|---|---|
| **1.0 i, 1.0 i 16V** | E | 999 | ALD, ANV, AST, AUC AVZ | | 08/99 ▸ 11/01 | 6K0820411A | **817245** | 588 361 | AL |
| **1.4 i, 1.4 i 16V** | E | 1390 | AKK, ANW, APE, AQQ AUA, AUB, AUD | | 08/99 ▸ 11/01 | 6K0820411 | **817245** | 588 361 | AL |
| **1.6 i** | E | 1595 | AEH, AKL, APF, AUR | | 06/99 ▸ 11/01 | 6K0820411 | **817245** | 588 361 | AL |
| **1.6 i** | E | 1598 | ALM | | 08/99 ▸ 11/01 | 6K0820411 | **817245** | 588 361 | AL |
| **1.8 i Turbo 20V** | E | 1781 | AQX, AYP | | 12/99 ▸ 11/01 | 6K0820411A | **817245** | 588 361 | AL |
| **1.9 SDi, 1.9 TDi** | D | 1896 | ALH, AGP, AGR, AQM ASV | | 03/99 ▸ 11/01 | 6K0820411A | **817245** | 588 361 | AL |

## IBIZA (2001>)

| | | | | | | | | | |
|---|---|---|---|---|---|---|---|---|---|
| **1.2 i 12V** ▸ 6L-3-044 431 | E | 1198 | AZQ | R134 | 11/01 ▸ | 6Q0820411J | **817686** | 468 361 | AL |
| **1.4 i 16V** ▸ 6L-3-044 431 | E | 1390 | BBZ, AUB, BBY, BKY | R134 | 09/01 ▸ | 6Q0820411J | **817686** | 468 361 | AL |

Condenser Condenseur Kondensator Condensatore Condensador Condensor КОНДЕНСЕР Kondenser Kondenzátor Condensator Συμπυκνωτής



• **New** Nouveau **Nuevo** Novo **Nuovo** Nieuw **Neu** Nowość **Yeni** Новый Νέο **Novy**

| | | CC | | | | OE | Valeo | DIM | TECH |
|---|---|---|---|---|---|---|---|---|---|
| **SEAT (.../...)** | | | | | | | | | |
| **IBIZA (2001>) (.../...)** | | | | | | | | | |
| **1.6 i** | E | 1598 | BAH | R134 | 04/03 ▸ | 6Q0820411J | **817686** | 468 361 | AL |
| **1.8 i 16V, 1.8 i Turbo 20V** | E | 1781 | BJX, BBU | R134 | 12/03 ▸ | 6Q0820411J | **817686** | 468 361 | AL |
| **2.0 i** | E | 1984 | AZL, BBX | R134 | 07/02 ▸ | 6Q0820411J | **817686** | 468 361 | AL |
| **1.4 TDi** 6L-3-044 432 ▸ | D | 1422 | AMF | R134 | 05/02 ▸ | 6Q0820411J | **817686** | 468 361 | AL |
| **1.9 SDi, 1.9 TDi** ▸ 6L-3-044 431 | D | 1896 | ATD, ASY, ASZ, BPX | R134 | 09/01 ▸ | 6Q0820411J | **817686** | 468 361 | AL |
| **LEON (98>2005)** | | | | | | | | | |
| **1.4 i 16V** | E | 1390 | APE, AHW, AXP, BCA | | 11/99 ▸ | 1J0820413N | **817244** | 548 361 | AL |
| **1.6 i, 1.6 i 16V** | E | 1595 | AUS, AEH, AKL, AZD BCB | | 11/99 ▸ | 1J0820413N | **817244** | 548 361 | AL |
| **1.8 i 20V, 1.8 i Turbo 20V** | E | 1781 | APG, AGN, AJQ, AMK APP, ARY, AUQ, BAM | | 11/99 ▸ | 1J0820413N | **817244** | 548 361 | AL |
| **2.8 i V6 24V** | E | 2792 | AUE, BDE | | 10/00 ▸ | 1J0820413N | **817244** | 548 361 | AL |
| **1.9 SDi, 1.9 TDi** | D | 1896 | ASV, AGR, AHF, ALH AQM, ASZ | | 11/99 ▸ | 1J0820413N | **817244** | 548 361 | AL |
| **LEON II** | | | | | | | | | |
| **1.4 i 16V** 1P-7-003 801 ▸ | E | 1390 | BXW | R134 | 06/06 ▸ | 1K0820411P | **817777** | 584 401 | AL |
| **1.6 i** | E | 1595 | BGU, BSE, BSF | R134 | 07/05 ▸ | 1K0820411H | **817777** | 584 401 | AL |
| **2.0 FSi, 2.0 TFSi 16V** | E | 1984 | BVZ, BLR, BLY, BVY BWA | R134 | 07/05 ▸ | 1K0820411H | **817777** | 584 401 | AL |
| **1.9 TDi** | D | 1896 | BKC, BLS | R134 | 07/05 ▸ | 1K0820411H | **817777** | 584 401 | AL |
| **2.0 TDi 16V** | D | 1968 | BKD, AZV, BMM | R134 | 07/05 ▸ | 1K0820411H | **817777** | 584 401 | AL |
| **TOLEDO (98>2004)** | | | | | | | | | |
| **1.4 i 16V** | E | 1390 | AHW, AXP | | 01/00 ▸ 05/02 | 1J0820413N | **817244** | 548 361 | AL |
| **1.6 i, 1.6 i 16V** | E | 1595 | AEH, AKL, AUS, AZD BCB | | 10/98 ▸ 07/04 | 1J0820413N | **817244** | 548 361 | AL |
| **1.8 i 20V** | E | 1781 | APG, AGN, AUQ | | 10/98 ▸ 07/04 | 1J0820413N | **817244** | 548 361 | AL |
| **2.3 i VR5 20V** | E | 2324 | AQN, AGZ | | 10/98 ▸ 11/03 | 1J0820413N | **817244** | 548 361 | AL |
| **1.9 TDi** | D | 1896 | ALH, AGR, AHF, ASV ASZ | | 10/98 ▸ 07/04 | 1J0820413N | **817244** | 548 361 | AL |
| **TOLEDO (2004>)** | | | | | | | | | |
| **1.4 FSi, 1.4 iSRE** | E | 1390 | BXW, CAX | R134 | 05/06 ▸ 01/08 | 1K0820411P | **817777** | 584 401 | AL |
| **1.6 i** | E | 1595 | BGU, BSE, BSF | R134 | 09/04 ▸ | 1K0820411H | **817777** | 584 401 | AL |
| **1.8 FSi 16V** | E | 1798 | BYT, BZB | R134 | 11/05 ▸ 01/08 | 1K0820411P | **817777** | 584 401 | AL |
| **2.0 FSi 16V, 2.0 i 16V** | E | 1984 | BLR, BLY, BVY, BVZ BWA | R134 | 09/04 ▸ | 1K0820411H | **817777** | 584 401 | AL |
| **1.9 TDi** | D | 1896 | BLS, BJB, BKC, BXE | R134 | 09/04 ▸ | 1K0820411H | **817777** | 584 401 | AL |
| **2.0 TDi 16V** | D | 1968 | BMM, AZV, BKD, BMN | R134 | 09/04 ▸ | 1K0820411H | **817777** | 584 401 | AL |
| **SEAT** | | | | | | | | | |
| **INCA** | | | | | | | | | |
| **1.4 i, 1.4 i 16V** | E | 1390 | AUA, AEX, AKV, APQ AUD | | 11/95 ▸ 06/03 | 6K0820413B | **816908** | 550 350 | AL |
| **1.6 i** | E | 1595 | 1F | | 11/95 ▸ 05/97 | 6K0820413B | **816908** | 550 350 | AL |
| **1.6 i** | E | 1598 | AEE | | 06/97 ▸ 09/00 | 6K0820413B | **816908** | 550 350 | AL |
| **1.7 SDi** | D | 1714 | AHB | | 09/96 ▸ 09/00 | 6K0820413B | **816908** | 550 350 | AL |
| **1.9 D, 1.9 SDi** | D | 1896 | AEY, 1Y, AYQ | | 11/95 ▸ 06/03 | 6K0820413B | **816908** | 550 350 | AL |
| **SKODA** | | | | | | | | | |
| **FABIA** | | | | | | | | | |
| **1.0 i** ▸ 6Y-4-875 195 | E | 997 | AQV, ARV | R134 | 01/01 ▸ | 6Q0820411J | **817686** | 468 361 | AL |
| **1.2 i** ▸ 6Y-4-875 195 | E | 1198 | AWY, AZQ, BMD, BME | R134 | 08/02 ▸ | 6Q0820411E | **817686** | 468 361 | AL |
| **1.4 i 16V** 6Y-4-875 196 ▸ | E | 1390 | AUA, AUB, BBY, BBZ BKY | R134 | 10/99 ▸ | 6Q0820411K | **817686** | 468 361 | AL |
| **1.4 i** 6Y-3-628 129 ▸ | E | 1397 | AME, AQW, ATZ, AZE AZF | R134 | 08/99 ▸ | 6Q0820411H | **817686** | 468 361 | AL |
| **2.0 i** 6Y-3-628 129 ▸ | E | 1984 | AZL | R134 | 07/00 ▸ | 6Q0820411K | **817686** | 468 361 | AL |

| | | CC | | | | OE | Valeo | DIM | TECH |
|---|---|---|---|---|---|---|---|---|---|
| **SKODA** (.../...) | | | | | | | | | |
| **FABIA (.../...)** | | | | | | | | | |
| **1.4 TDi** | D | 1422 | AMF,BNM,BNV,BMS | R134 | 08/02 ▸ | 6Q0820411K | **817686** | 468 361 | AL |
| **1.9 SDi, 1.9 TDi** 6Y-4-875 196 ▸ | D | 1896 | ASY, ASZ, ATD | R134 | 09/00 ▸ | 6Q0820411H | **817686** | 468 361 | AL |
| **FABIA II** | | | | | | | | | |
| **1.6 i 16V** | E | 1598 | BTS-E4 | R134 | 04/07 ▸ | 6Q0820411K | **817686** | 468 361 | AL |
| **OCTAVIA (96>2000)** | | | | | | | | | |
| **1.4 i** | E | 1390 | AMD | | 02/99 ▸ 07/00 | 1J0820413N | **817244** | 548 361 | AL |
| **1.6 i** | E | 1595 | AEH, AKL | | 02/97 ▸ 07/00 | 1J0820413N | **817244** | 548 361 | AL |
| **1.6 i** | E | 1598 | AEE | | 10/96 ▸ 07/00 | 1J0820413N | **817244** | 548 361 | AL |
| **1.8 i 20V, 1.8 i Turbo 20V** | E | 1781 | AGN, AGU, ARZ | | 10/96 ▸ 07/00 | 1J0820413N | **817244** | 548 361 | AL |
| **2.0 i** | E | 1984 | AZH, APK, AQY, ATF | | 05/99 ▸ 07/00 | 1J0820413N | **817244** | 548 361 | AL |
| **1.9 SDi, 1.9 TDi** | D | 1896 | AGP, AGR, AHF, ASV | | 10/96 ▸ 07/00 | 1J0820413N | **817244** | 548 361 | AL |
| **OCTAVIA (2000>2004)** | | | | | | | | | |
| **1.4 i, 1.4 i 16V** | E | 1390 | AMD, AXP, BCA | | 08/00 ▸ | 1J0820413N | **817244** | 548 361 | AL |
| **1.6 i** | E | 1595 | AKL, AEH, AVU, BFQ | | 08/00 ▸ | 1J0820413N | **817244** | 548 361 | AL |
| **1.6 i** | E | 1598 | AEE | | 08/00 ▸ 09/04 | 1J0820413N | **817244** | 548 361 | AL |
| **1.8, 1.8 i Turbo 20V** | E | 1781 | ARX, AGU, ARZ, AUM AUQ | | 08/00 ▸ 09/04 | 1J0820413N | **817244** | 548 361 | AL |
| **2.0 i** | E | 1984 | AZJ, AEG, APK, AQY AZH | | 08/00 ▸ 09/04 | 1J0820413N | **817244** | 548 361 | AL |
| **1.9 D, 1.9 TDi** | D | 1896 | ASV, AGR, AHF, ALH AQM, ASZ, ATD | | 08/00 ▸ | 1J0820413N | **817244** | 548 361 | AL |
| **OCTAVIA (2004>)** | | | | | | | | | |
| **1.4 i** | E | 1390 | BCA | R134 | 05/04 ▸ | 1K0820411E | **817777** | 584 401 | AL |
| **1.6 i** | E | 1595 | BGU, BSE, BSF | R134 | 05/04 ▸ | 1K0820411E | **817777** | 584 401 | AL |
| **1.6 FSi** | E | 1598 | BLF | R134 | 05/04 ▸ | 1K0820411E | **817777** | 584 401 | AL |
| **2.0 FSi, 2.0 TFSi 16V** | E | 1984 | BLR, BLX, BLY, BVX BVY, BVZ, BWA | R134 | 11/04 ▸ | 1K0820411E | **817777** | 584 401 | AL |
| **1.9 TDi** | D | 1896 | BJB, BKC, BLS | R134 | 05/04 ▸ | 1K0820411E | **817777** | 584 401 | AL |
| **2.0 TDi** | D | 1968 | BKD, AZV, BMM | R134 | 05/04 ▸ | 1K0820411E | **817777** | 584 401 | AL |
| **ROOMSTER** | | | | | | | | | |
| **1.2 i 12V** | E | 1198 | BME-E4,BZG | R134 | 05/06 ▸ | 6Q0820411K | **817686** | 468 361 | AL |
| **1.4 i 16V** | E | 1390 | BXW-E2, BXW-E4 | R134 | 05/06 ▸ | 6Q0820411K | **817686** | 468 361 | AL |
| **1.6 16V** | E | 1598 | BTS-E2, BTS-E4 | R134 | 05/06 ▸ | 6Q0820411K | **817686** | 468 361 | AL |
| **1.4 TDi** | D | 1422 | BNV, BNM,BMS | R134 | 05/06 ▸ | 6Q0820411K | **817686** | 468 361 | AL |
| **1.9 TDi** | D | 1896 | AXR,BLS, BSW | R134 | 03/06 ▸ | 6Q0820411K | **817686** | 468 361 | AL |
| **SUPERB** | | | | | | | | | |
| **1.8 i Turbo 20V** | E | 1781 | AWT | | 12/01 ▸ | 3B0260401 | **817679** | 618 421 | AL |
| **2.0 i** | E | 1984 | AZM | | 12/01 ▸ | 3B0260401 | **817679** | 618 421 | AL |
| **2.8 i V6 30V** | E | 2771 | AMX,BBG | | 12/01 ▸ | 3B0260401 | **817679** | 618 421 | AL |
| **1.9 TDi** | D | 1896 | AWX, AVB, AVF | | 12/01 ▸ | 3B0260401 | **817679** | 618 421 | AL |
| **2.5 TDi V6 24V** | D | 2496 | AYM,BDG | | 12/01 ▸ | 3B0260401 | **817679** | 618 421 | AL |
| **SUBARU** | | | | | | | | | |
| **FORESTER (97>2002)** | | | | | | | | | |
| **2.0 i** CAD ▸ | E | 1994 | EJ20J | | 07/97 ▸ 06/98 | 73210FC000 | **814306** | 695 328 | AL |
| **2.0 i,2.0 i 16V,2.0 i Turbo** | E | 1994 | EJ202,EJ205,EJ20J | | 07/97 ▸ 12/99 | 73210FC030 | **814268** | 693 348 | AL |
| **2.0 i 16V,2.0 i Turbo** | E | 1994 | EJ202,EJ205 | | 01/00 ▸ 09/02 | 73210FC050 | **814311** | 698 368 | AL |
| **FORESTER (2002>)** | | | | | | | | | |
| **2.0 i 16V** | E | 1994 | EJ20, EJ20E EJ205-E2 | R134 | 09/02 ▸ 09/06 | 73210SA011 | **814312** | 649 358 | AL |
| **2.5 i 16V** | E | 2457 | EJ25, EJ25T | R134 | 09/02 ▸ 09/06 | 73210SA011 | **814312** | 649 358 | AL |
| **LEGACY (94>97)** | | | | | | | | | |
| **1.8 i** | E | 1820 | EJ18EN,EJ18JN | | 07/95 ▸ 11/98 | 73210AC021 | **814259** | 698 298 | AL |
| **2.0 i** | E | 1994 | EJ20EN,EJ20ER | | 01/94 ▸ 11/98 | 73210AC021 | **814259** | 698 298 | AL |
| **2.2 i** | E | 2212 | EJ22EN,EJ22ER | | 01/94 ▸ 06/97 | 73210AC021 | **814259** | 698 298 | AL |
| **2.5 i 16V** | E | 2457 | EJ25D | | 02/97 ▸ 11/98 | 73210AC050 | **818101** | 702 308 | AL |

Condenser Condenseur Kondensator Condensatore Condensor Condensador КОНДЕНСЕР Kondenser Kondenzátor Condensator Συμπυκνωτής



• **New** Nouveau **Nuevo** Novo **Nuovo** Nieuw **Neu** Nowość **Yeni** Новый Νέο **Novy**

| | | CC | | | | OE | Valeo | DIM | TECH |
|---|---|---|---|---|---|---|---|---|---|
| **SUBARU** (.../...) | | | | | | | | | |
| **LEGACY (98>2002)** | | | | | | | | | |
| **2.0 i 16V** | E | 1994 | EJ201 | R134 | 10/98 ▸ 04/03 | 73210AG000 | **814314** | 606 293 | AL |
| **2.5 i 16V** | E | 2457 | EJ251 | R134 | 10/98 ▸ 04/03 | 73210AG000 | **814314** | 606 293 | AL |
| **3.0 i 24V** | E | 2999 | EZ30-209 | R134 | 10/00 ▸ 04/03 | 73210AG000 | **814314** | 606 293 | AL |
| **LEGACY (2003>)** | | | | | | | | | |
| **2.0 i 16V** | E | 1994 | EJ202,EJ204,EJ20E | R134 | 05/03 ▸ | 73210AG000 | **814314** | 606 293 | AL |
| **2.5 i 16V** | E | 2457 | EJ25-165 | R134 | 05/03 ▸ | 73210AG000 | **814314** | 606 293 | AL |
| **3.0 i 24V** | E | 2999 | EZ30-245 | R134 | 05/03 ▸ | 73210AG000 | **814314** | 606 293 | AL |
| **SUZUKI** | | | | | | | | | |
| **BALENO** | | | | | | | | | |
| **1.5 i 16V** | E | 1493 | G15A | | 04/95 ▸ 2002 | 9531060G41 | **814305** | 563 278 | AL |
| **1.6 i 16V** | E | 1590 | G16B | | 04/95 ▸ 2002 | 9531060G41 | **814305** | 563 278 | AL |
| **SPLASH** | | | | | | | | | |
| **1.2 i 16V** | E | 1242 | K12B | R134 | 03/08 ▸ | 9531051K00 | **814219** | 542 346 | AL |
| **1.0 i 12V** | E | 997 | K10B | R134 | 03/08 ▸ | 9531051K00 | **814219** | 542 346 | AL |
| **SWIFT (2005>)** | | | | | | | | | |
| **1.3 i 16V** | E | 1328 | M13AVVT | R134 / JAP | 04/05 ▸ | 9531063J00 | **814237** | 534 322 | AL |
| **1.5 i 16V** | E | 1490 | M15 | R134 / JAP | 04/05 ▸ | 9531063J00 | **814237** | 534 322 | AL |
| **1.6 i 16V** | E | 1586 | M16A | R134 / JAP | 04/06 ▸ | 9531063J00 | **814237** | 534 322 | AL |
| **VITARA** | | | | | | | | | |
| **1.6,1.6 i 16V,1.6 i 8V** | E | 1590 | G16AC,G16AI,G16B | | 10/88 ▸ 03/98 | 9531067A50 | **814244** | 446 353 | AL |
| **GRAND VITARA (98>2005)** | | | | | | | | | |
| **1.6 i 16V** | E | 1590 | G16B | R134 | 05/98 ▸ 02/05 | 9531064J00 | **814228** | 668 423 | AL |
| **2.0 i 16V** | E | 1995 | J20A | R134 | 05/98 ▸ 02/05 | 9531064J00 | **814228** | 668 423 | AL |
| **GRAND VITARA (2006>)** | | | | | | | | | |
| **1.6 VVT 16V** | E | 1586 | M16A | R134 | 03/06 ▸ | 9531064J00 | **814228** | 668 423 | AL |
| **2.0 VVT 16V** | E | 1995 | J20A | R134 | 03/06 ▸ | 9531064J00 | **814228** | 668 423 | AL |
| **1.9 DDiS** | D | 1870 | F9Q | R134 | 03/06 ▸ | 9531064J00 | **814228** | 668 423 | AL |
| **TOYOTA** | | | | | | | | | |
| **4 RUNNER (130)** | | | | | | | | | |
| **2.4 TD** | D | 2446 | 2L-T | | 08/93 ▸ 11/95 | 8846035090 | **818103** | 466 373 | AL |
| **3.0 i** | E | 2959 | 3VZ-E | | 08/93 ▸ 11/95 | 8846035090 | **818103** | 466 373 | AL |
| **3.0 TD** | D | 2982 | 1KZ-T | | 08/93 ▸ 11/95 | 8846035090 | **818103** | 466 373 | AL |
| **AURIS (JPP150) (2006>)** | | | | | | | | | |
| **1.3 VVT-i 100 16V** | E | 1329 | 1NRFE-HTWC | R134 | 09/08 ▸ 10/09 | 8845012280 | **814234** | 626 370 | AL |
| **AURIS (2006>)** | | | | | | | | | |
| **1.4 VVT-i 97 16V** | E | 1398 | 4ZZFE-HTWC | R134 | 10/06 ▸ 12/08 | 8845012280 | **814234** | 626 370 | AL |
| **1.6 VVT-i 124 16V**<br>**1.6 VVT-i 132 16V** | E | 1598 | 1ZRFAE-HTWVM<br>1ZRFE-HTWC | R134 | 10/06 ▸ | 8845012280 | **814234** | 626 370 | AL |
| **1.8 VVT-i 147 16V** | E | 1798 | 2ZRFAE-HTWVM | R134 | 12/08 ▸ 10/09 | 8845012280 | **814234** | 626 370 | AL |
| **2.0 D-4D** | D | 1998 | 1ADFTV-DCR<br>1ADFTV-DCRL/F | R134 | 10/06 ▸ 01/09 | 8845012290 | **814205** | 696 346 | AL |
| **AURIS (2007>2010)** | | | | | | | | | |
| **1.4 D-4D** | D | 1364 | 1NDTV-DCR | R134 | 02/07 ▸ 01/10 | 8845012280 | **814234** | 626 370 | AL |
| **1.4 VVT-i 16V** | E | 1398 | 4ZZFE-HTWC | R134 | 02/07 ▸ 11/08 | 8845012280 | **814234** | 626 370 | AL |
| **1.6 VVT-i 16V** | E | 1598 | 1ZRFE-HTWC | R134 | 02/07 ▸ 02/09 | 8845012280 | **814234** | 626 370 | AL |
| **2.0 D-4D** | D | 1998 | 1ADFTV-DCR<br>1ADFTV-DCRL/F | R134 | 02/07 ▸ 01/10 | 8845012290 | **814205** | 696 346 | AL |
| **2.2 D-4D** | D | 2231 | 2ADFHV-DCRL | R134 | 02/07 ▸ 01/10 | 8845012290 | **814205** | 696 346 | AL |
| **AVENSIS (97>2000)** | | | | | | | | | |
| **1.6 i 16V** | E | 1587 | 4A-FEC | R134 | 10/97 ▸ 06/00 | 8845005010 | **817802** | 574 308 | AL |
| **1.6 i 16V** | E | 1587 | 4A-FEC | R134 | 10/97 ▸ 06/00 | 8845005020 | **817803** | 574 308 | AL |
| **1.8 i 16V** | E | 1762 | 7A-FE | R134 | 10/97 ▸ 06/00 | 8845005010 | **817802** | 574 308 | AL |
| **1.8 i 16V** | E | 1762 | 7A-FE | R134 | 10/97 ▸ 06/00 | 8845005020 | **817803** | 574 308 | AL |

# TOYOTA (.../...)

## AVENSIS (97>2000) (.../...)

| | | CC | | | | OE | Valeo | DIM | TECH |
|---|---|---|---|---|---|---|---|---|---|
| **2.0 i 16V** | E | 1998 | 3S-FE | +/ R134 | 10/97 ▸ 06/00 | 8845005020 | **817803** | 574 308 | AL |
| **2.0 i 16V** | E | 1998 | 3S-FE | +/ R134 | 10/97 ▸ 06/00 | 8845005010 | **817802** | 574 308 | AL |
| **2.0 TD** | D | 1974 | 2C-T,2C-TE | +/ R134 | 10/97 ▸ 06/00 | 8845005010 | **817802** | 574 308 | AL |
| **2.0 TD** | D | 1974 | 2C-TE | +/ R134 | 10/97 ▸ 06/00 | 8845005020 | **817803** | 574 308 | AL |
| **2.0 D-4D 16V** | D | 1995 | 1CDFTV-HDCR | +/ R134 | 08/99 ▸ 06/00 | 8845005010 | **817802** | 574 308 | AL |
| **2.0 D-4D 16V** | D | 1995 | 1CDFTV-HDCR | +/ R134 | 08/99 ▸ 06/00 | 8845005020 | **817803** | 574 308 | AL |

## AVENSIS (2000>2003)

| | | | | | | | | | |
|---|---|---|---|---|---|---|---|---|---|
| **1.6 VVTi 16V** | E | 1598 | 3ZZ-FE | +/ R134 | 07/00 ▸ 01/03 | 8845005070 | **817802** | 574 308 | AL |
| **1.8 i 16V** | E | 1794 | 1ZZ-FE | +/ R134 | 07/00 ▸ 01/03 | 8845005070 | **817802** | 574 308 | AL |
| **2.0 D4 16V,2.0 i 16V** | E | 1998 | 1AZ-FSE,3S-FE | +/ R134 | 07/00 ▸ 01/03 | 8845005070 | **817802** | 574 308 | AL |
| **2.0 D-4D 16V** | D | 1995 | 1CDFTV-HDCR | +/ R134 | 07/00 ▸ 01/03 | 8845005070 | **817802** | 574 308 | AL |

## AVENSIS (2003>2008)

| | | | | | | | | | |
|---|---|---|---|---|---|---|---|---|---|
| **1.6 VVTi 16V** | E | 1598 | 3ZZ-FE | +/ R134 | 01/03 ▸ 11/08 | 8845005100 | **814208** | 646 390 | AL |
| **1.8 VVTi 16V** | E | 1794 | 1ZZ-FE | +/ R134 | 01/03 ▸ 11/08 | 8845005100 | **814208** | 646 390 | AL |
| **2.0 D-4 16V,2.0 VVTi 16V** | E | 1998 | 1AZ-FE,1AZ-FSE | +/ R134 | 01/03 ▸ 11/08 | 8845005120 | **814209** | 646 384 | AL |
| **2.4 VVTi 16V** | E | 2362 | 2AZ-FSE | +/ R134 | 04/06 ▸ 11/08 | 8845005170 | **814213** | 646 390 | AL |
| **2.0 D-4D 16V** | D | 1995 | 1CDFTV-DCRL | +/ R134 | 05/03 ▸ 04/06 | 8845005170 | **814213** | 646 390 | AL |
| **2.0 D-4D 16V** | D | 1995 | 1CDFTV-DCRL | +/ R134 | 03/03 ▸ 04/06 | 8845005140 | **814271** | 593 360 | AL |
| **2.0 D-4D 16V** | D | 1998 | 1ADFTV-DCR | +/ R134 | 05/06 ▸ 11/08 | 8845005170 | **814213** | 646 390 | AL |
| **2.2 D-4D 16V** | D | 2231 | 2AD-FTV,2ADFHV-DCRL | +/ R134 | 04/05 ▸ 11/08 | 8845005170 | **814213** | 646 390 | AL |
| **2.4 VVTi 16V** | E | 2362 | 2AZ-FSE | +/ R134 | 09/03 ▸ 11/08 | 8845005120 | **814209** | 646 384 | AL |

## AVENSIS VERSO (2001>2005)

| | | | | | | | | | |
|---|---|---|---|---|---|---|---|---|---|
| **2.0 D-4D 16V** | D | 1995 | 1CDFTV-DCRL | +/ R134 | 05/01 ▸ 07/05 | 8846044520 | **814207** | 750 398 | AL |
| **2.0 VVTi 16V** | E | 1998 | 1AZ-FE | +/ R134 | 05/01 ▸ 07/05 | 8846044520 | **814207** | 750 398 | AL |

## AYGO

| | | | | | | | | | |
|---|---|---|---|---|---|---|---|---|---|
| **1.0 VVT-i** | E | 998 | 1KR-FE | +/ R134 | 07/05 ▸ | 884500H020 | **818013** | 359 351 | AL |
| **1.4 D** | D | 1398 | 2WZTV | +/ R134 | 07/05 ▸ | 884500H010 | **818014** | 359 351 | AL |

## CAMRY (86>91)

| | | | | | | | | | |
|---|---|---|---|---|---|---|---|---|---|
| **1.8** | E | 1832 | 1S-L | | 10/86 ▸ 08/88 | 8846032090 | **814279** | 642 310 | AL |
| **2.0 i** | E | 1996 | 3S-FE | | 10/86 ▸ 06/91 | 8846032090 | **814279** | 642 310 | AL |
| **2.0 i 16V** | E | 1998 | 3S-FE | | 10/86 ▸ 06/91 | 8846032090 | **814279** | 642 310 | AL |
| **2.5 i V6** | E | 2507 | 2VZ-FE | | 02/88 ▸ 06/91 | 8846032090 | **814279** | 642 310 | AL |
| **2.0 TD** | D | 1974 | 2C-TL | | 10/86 ▸ 06/91 | 8846032090 | **814279** | 642 310 | AL |

## CAMRY (91>96)

| | | | | | | | | | |
|---|---|---|---|---|---|---|---|---|---|
| **2.2 i 16V** | E | 2164 | 5S-FE | | 06/91 ▸ 09/93 | 8846033010 | **814282** | 687 404 | AL |
| **3.0 i V6** | E | 2959 | 3VZ-FE | | 06/91 ▸ 09/93 | 8846033010 | **814282** | 687 404 | AL |

## CAMRY (96>2001)

| | | | | | | | | | |
|---|---|---|---|---|---|---|---|---|---|
| **2.2 i 16V** | E | 2164 | 5S-FE | | 08/96 ▸ 05/97 | 8846006060 | **814283** | 725 404 | AL |
| **2.2 i 16V** | E | 2164 | 5S-FE | | 08/96 ▸ 07/01 | 8846006061 | **814247** | 725 404 | AL |
| **3.0 i V6 24V** | E | 2995 | 1MZ-FE | | 08/96 ▸ 05/97 | 8846006060 | **814283** | 725 404 | AL |
| **3.0 i V6 24V** | E | 2995 | 1MZ-FE | | 08/96 ▸ 07/01 | 8846006061 | **814247** | 725 404 | AL |

## CARINA E (92>97)

| | | | | | | | | | |
|---|---|---|---|---|---|---|---|---|---|
| **1.6 i 16V** | E | 1587 | 4A-FE | | 12/92 ▸ 12/97 | 8846005010 | **814246** | 690 336 | AL |
| **1.6 i 16V** | E | 1587 | 4A-FE | +/ R134 | 12/92 ▸ 12/97 | 8845005010 | **817802** | 574 308 | AL |
| **1.8 i 16V** | E | 1762 | 7A-FE | | 12/94 ▸ 10/97 | 8846005010 | **814246** | 690 336 | AL |
| **1.8 i 16V** | E | 1762 | 7A-FE | +/ R134 | 12/94 ▸ 10/97 | 8845005010 | **817802** | 574 308 | AL |
| **2.0 i 16V** | E | 1998 | 3S-FE,3S-GE | | 02/92 ▸ 10/97 | 8846005010 | **814246** | 690 336 | AL |
| **2.0 i 16V** | E | 1998 | 3S-FE,3S-GE | +/ R134 | 02/92 ▸ 10/97 | 8845005010 | **817802** | 574 308 | AL |
| **2.0 D,2.0 TD** | D | 1974 | 2C,2C-T | +/ R134 | 10/94 ▸ 10/97 | 8845005020 | **817803** | 574 308 | AL |

## CELICA (93>99)

| | | | | | | | | | |
|---|---|---|---|---|---|---|---|---|---|
| **1.8 i 16V** | E | 1762 | 7A-FE | | 11/93 ▸ 07/99 | 8846020470 | **818104** | 594 328 | AL |
| **2.0 i,2.0 i Turbo** | E | 1998 | 3S-GE1,3S-GTE | | 11/93 ▸ 07/99 | 8846020470 | **818104** | 594 328 | AL |

## COROLLA (100) (92>97)

| | | | | | | | | | |
|---|---|---|---|---|---|---|---|---|---|
| **1.3 i** | E | 1332 | 4E-FE | | 09/95 ▸ 04/97 | 8846012460 | **814248** | 685 336 | AL |
| **1.6 i** | E | 1587 | 4A-FE | | 11/92 ▸ 05/95 | 8846012460 | **814248** | 685 336 | AL |
| **1.8 GT** | E | 1762 | 7A-FE | | 11/92 ▸ 05/95 | 8846012460 | **814248** | 685 336 | AL |

| | | CC | | | | OE | Valeo | DIM | TECH |
|---|---|---|---|---|---|---|---|---|---|
| **COROLLA (110) (97>99)** | | | | | | | | | |
| **1.3 i 12V** | E | 1296 | 2E | | 04/97 ▸ 09/99 | 8846012480 | **818107** | 682 311 | AL |
| **1.3 i 16V** | E | 1332 | 4E-FE | | 04/97 ▸ 11/99 | 8846012480 | **818107** | 682 311 | AL |
| **1.6 i 16V** | E | 1587 | 4A-FE | | 04/97 ▸ 11/99 | 8846012480 | **818107** | 682 311 | AL |
| **1.8 i 16V** | E | 1762 | 7A-FE | | 04/97 ▸ 09/99 | 8846012480 | **818107** | 682 311 | AL |
| **2.0 D** | D | 1974 | 2C-E | | 04/97 ▸ 09/99 | 8846012480 | **818107** | 682 311 | AL |
| **2.0 D** | D | 1975 | 2C-E | | 04/97 ▸ 02/00 | 8846002050 | **814298** | 687 319 | AL |
| **COROLLA (110) (99>2001)** | | | | | | | | | |
| **1.3 i 12V** | E | 1296 | 2E | | 10/99 ▸ 07/01 | 8846012480 | **818107** | 682 311 | AL |
| **1.4 i 16V** | E | 1398 | 4ZZ-FE | | 10/99 ▸ 10/01 | 8846012480 | **818107** | 682 311 | AL |
| **1.6 VVTi 16V** | E | 1598 | 3ZZ-FE | | 10/99 ▸ 10/01 | 8846012480 | **818107** | 682 311 | AL |
| **1.8 i 16V** | E | 1762 | 7A-FE | | 10/99 ▸ 10/01 | 8846012480 | **818107** | 682 311 | AL |
| **1.9 D** | D | 1868 | 1WZ | | 12/99 ▸ 10/01 | 8846012480 | **818107** | 682 311 | AL |
| **2.0 D-4D 16V** | D | 1995 | 1CDFTV-DCR | | 08/00 ▸ 10/01 | 8846012480 | **818107** | 682 311 | AL |
| **COROLLA (120) (2001>)** | | | | | | | | | |
| **1.4 i 16V** | E | 1398 | 4ZZ-FE | + R134 | 01/02 ▸ 09/02 | 8846012540 | **814238** | 653 363 | AL |
| **1.4 i 16V** | E | 1398 | 4ZZ-FE | + R134 | 10/01 ▸ 02/07 | 8845013031 | **817805** | 609 368 | AL |
| **1.6 VVT-i 16V** | E | 1598 | 3ZZ-FE | + R134 | 10/01 ▸ 02/07 | 8845013031 | **817805** | 609 368 | AL |
| **1.6 VVT-i 16V** | E | 1598 | 3ZZ-FE | + R134 | 10/01 ▸ 09/02 | 8846012540 | **814238** | 653 363 | AL |
| **1.8 i 16V** | E | 1796 | 2ZZ-GE | + R134 | 11/01 ▸ 02/07 | 8845013031 | **817805** | 609 368 | AL |
| **1.8 i 16V** | E | 1796 | 2ZZ-GE | + R134 | 02/05 ▸ 02/07 | 8845002240 | **814210** | 646 377 | AL |
| **1.4 D4-D** | D | 1364 | 1NDTV | + R134 | 08/04 ▸ 02/07 | 8845002240 | **814210** | 646 377 | AL |
| **1.4 D4-D** | D | 1364 | 1NDTV | + R134 | 08/04 ▸ 02/07 | 8845002150 | **817805** | 609 368 | AL |
| **2.0 D4-D 16V** | D | 1995 | 1CDFTV-DCR<br>1CDFTV-DCRL | + R134 | 10/01 ▸ 09/02 | 8846012540 | **814238** | 653 363 | AL |
| **2.0 D4-D 16V** | D | 1995 | 1CDFTV-DCR<br>1CDFTV-DCRL<br>1CDFTV-HDCR | + R134 | 10/01 ▸ 02/07 | 8845013031 | **817805** | 609 368 | AL |
| **2.0 D4-D 16V** | D | 1995 | 1CDFTV-DCRL | + R134 | 06/04 ▸ 02/07 | 8845002240 | **814210** | 646 377 | AL |
| **COROLLA (150) (2006>)** | | | | | | | | | |
| **1.3 VVT-i 16V** | E | 1329 | 1NRFE-HTWC | + R134 | 12/08 ▸ 04/10 | 8845012280 | **814234** | 626 370 | AL |
| **1.4 VVT-i 16V** | E | 1398 | 4ZZFE-HTWC | + R134 | 11/06 ▸ 12/08 | 8845012280 | **814234** | 626 370 | AL |
| **1.6 VVT-i 16V** | E | 1598 | 1ZRFAE-HTWVM<br>1ZRFE-HTWC | + R134 | 11/06 ▸ | 8845012280 | **814234** | 626 370 | AL |
| **COROLLA VERSO (2001>2003)** | | | | | | | | | |
| **1.6 VVTi 16V** | E | 1598 | 3ZZ-FE | + R134 | 10/01 ▸ 12/03 | 8845013031 | **817805** | 609 368 | AL |
| **1.8 VVTi 16V** | E | 1794 | 1ZZ-FE | + R134 | 10/01 ▸ 12/03 | 8845013031 | **817805** | 609 368 | AL |
| **COROLLA VERSO (2001>2003)** | | | | | | | | | |
| **1.8 VVTi 16V** | E | 1794 | 1ZZ-FE | + R134 | 01/02 ▸ 12/03 | 8845002170 | **814263** | 610 368 | AL |
| **COROLLA VERSO (2001>2003)** | | | | | | | | | |
| **2.0 D4-D 16V** | D | 1995 | 1CDFTV-HDCR | + R134 | 10/01 ▸ 12/03 | 8845013031 | **817805** | 609 368 | AL |
| **COROLLA VERSO (2004>2009)** | | | | | | | | | |
| **1.6 VVTi**<br>CAD ▸ | E | 1598 | 3ZZ-FE | + R134 | 02/04 ▸ 02/09 | 884500F100 | **814212** | 646 390 | AL |
| **1.6 VVTi** | E | 1598 | 3ZZ-FE | + R134 | 02/04 ▸ 02/09 | 884500F110 | **814211** | 646 390 | AL |
| **1.8 VVTi 16V**<br>CAD ▸ | E | 1794 | 1ZZ-FE | + R134 | 02/04 ▸ 02/09 | 884500F100 | **814212** | 646 390 | AL |
| **1.8 VVTi 16V** | E | 1794 | 1ZZ-FE | + R134 | 02/04 ▸ 02/09 | 884500F110 | **814211** | 646 390 | AL |
| **2.0 D4-D 16V**<br>CAD ▸ | D | 1995 | 1CDFTV-DCRL | + R134 | 02/04 ▸ 08/05 | 884500F100 | **814212** | 646 390 | AL |
| **2.0 D4-D 16V** | D | 1995 | 1CDFTV-DCRL | + R134 | 02/04 ▸ 08/05 | 884500F110 | **814211** | 646 390 | AL |
| **IQ** | | | | | | | | | |
| **1.0 VVT-i 12V** | E | 998 | 1KR-FE | + R134 | 01/09 ▸ | 8846074010 | **814220** | 446 391 | AL |
| **1.3 VVT-i 16V** | E | 1329 | 1NRFE | + R134 | 05/09 ▸ | 8846074010 | **814220** | 446 391 | AL |
| **1.4 D-4D** | D | 1364 | 1NDTV-DCRL | + R134 | 01/09 ▸ | 8846074010 | **814220** | 446 391 | AL |
| **LAND CRUISER (80>96)** | | | | | | | | | |
| **2.4** | E | 2366 | 22R, 22RE | | 12/88 ▸ 12/96 | 8846160051 | **814280** | 485 520 | AL |
| **4.0** | E | 3956 | 3F, 3F-E | | 11/84 ▸ 08/87 | 8846160051 | **814280** | 485 520 | AL |
| **4.2** | E | 4230 | 2F | | 10/81 ▸ 01/88 | 8846160051 | **814280** | 485 520 | AL |

# TOYOTA (.../...)

| | | CC | | | | OE | Valeo | DIM | TECH |
|---|---|---|---|---|---|---|---|---|---|
| **LAND CRUISER (80>96) (.../...)** | | | | | | | | | |
| **2.4 D** | D | 2446 | 2L-T | | 10/85 ▸ 05/90 | 8846160051 | **814280** | 485 520 | AL |
| **3.4 D** | D | 3432 | 3B | | 10/81 ▸ 07/87 | 8846160051 | **814280** | 485 520 | AL |
| **4.0 D** | D | 3980 | 2H | | 10/81 ▸ 01/88 | 8846160051 | **814280** | 485 520 | AL |
| **LAND CRUISER (96>2002)** | | | | | | | | | |
| **3.4 i V6** | E | 3378 | 5VZ-FE | +/ R134 | 04/96 ▸ 09/02 | 8846160100 | **814203** | 626 522 | AL |
| **3.0 TD** | D | 2982 | 1KD-FTV,1KZ-TE | +/ R134 | 04/96 ▸ 09/02 | 8846160100 | **814203** | 626 522 | AL |
| **LAND CRUISER (2002>)** | | | | | | | | | |
| **4.0 i VVT-i 24V** | E | 3956 | 1GR-FE | +/ R134 | 08/04 ▸ 08/09 | 8846160091 | **814230** | 630 478 | AL |
| **3.0 D-4D 16V** | D | 2982 | 1KD-FTV | +/ R134 | 09/02 ▸ 08/09 | 8846160100 | **814203** | 626 522 | AL |
| **3.0 D-4D 16V** | D | 2982 | 1KD-FTV | +/ R134 | 09/02 ▸ 08/04 | 8846135160 | **814236** | 628 503 | AL |
| **PICNIC (96>2001)** | | | | | | | | | |
| **2.0 i 16V** | E | 1998 | 3S-FEC | | 09/96 ▸ 04/98 | 8846044030 | **818105** | 632 368 | AL |
| **2.0 i** | E | 1998 | 3S-FEC | +/ R134 | 04/98 ▸ 05/01 | 8846044350 | **818032** | 594 368 | AL |
| **2.2 TD** | D | 2184 | 3C-TE | | 09/97 ▸ 04/98 | 8846044050 | **818105** | 632 368 | AL |
| **PICNIC (2001>)** | | | | | | | | | |
| **2.0 VVTi 16V** | E | 1998 | 1AZ-FE | +/ R134 | 05/01 ▸ 07/05 | 8846044440 | **814207** | 750 398 | AL |
| **2.0 D-4D 16V** | D | 1995 | 1CDFTV-DCRL | +/ R134 | 05/01 ▸ 07/05 | 8846044520 | **814207** | 750 398 | AL |
| **PREVIA (2000>)** | | | | | | | | | |
| **2.0 D-4D 16V** | D | 1995 | 1CDFTV-HDCR | +/ R134 | 02/01 ▸ 01/06 | 8846028550 | **814261** | 729 428 | AL |
| **2.4 VVTi 16V** | E | 2362 | 2AZ-FE | +/ R134 | 02/00 ▸ 01/06 | 8846028550 | **814261** | 729 428 | AL |
| **PRIUS (2003>2009)** | | | | | | | | | |
| **1.5 i 16V** | E | 1497 | 1NZ-FXE | +/ R134 | 08/03 ▸ | 8845047020 | **814158** | 565 340 | |
| **RAV 4 (94>2000)** | | | | | | | | | |
| **2.0 i 16V** | E | 1998 | 3S-FE,3S-FEC | | 04/94 ▸ 07/00 | 8846042021 | **814285** | 744 302 | AL |
| **RAV 4 (2000>2005)** | | | | | | | | | |
| **1.8 i 16V** | E | 1794 | 1ZZ-FE | +/ R134 | 05/00 ▸ 11/05 | 8846042070 | **814218** | 730 378 | AL |
| **2.0 VVT-i 16V,2.0 i 16V** | E | 1998 | 1AZ-FE | +/ R134 | 05/00 ▸ 11/05 | 8846042070 | **814218** | 730 378 | AL |
| **2.0 D-4D 16V** | D | 1995 | 1CDFTV-DCRL | +/ R134 | 05/01 ▸ 11/05 | 8846042070 | **814218** | 730 378 | AL |
| **RAV 4 (2006>)** | | | | | | | | | |
| **2.0 VVTi 158 16V** | E | 1987 | 3ZR-FAE-HTWVM | +/ R134 | 12/08 ▸ 02/10 | 8846042100 | **814204** | 706 429 | AL |
| **2.0 VVTi 16V** | E | 1998 | 1AZ-FE | +/ R134 | 11/05 ▸ 12/08 | 8846042100 | **814204** | 706 429 | AL |
| **2.2 D-4D 150 16V,2.2 D-4D 16V** | D | 2231 | 2AD-FTV,2ADFHV-DCRL<br>2ADFHV-DCRL/F<br>2ADFTV-DCRE/F | +/ R134 | 11/05 ▸ | 8846042100 | **814204** | 706 429 | AL |
| **2.4 VVTi 16V** | E | 2362 | 2AZ-FE | +/ R134 | 01/07 ▸ | 8846042100 | **814204** | 706 429 | AL |
| **YARIS (99>2005)** | | | | | | | | | |
| **1.0 i 16V** | E | 998 | 1SZ-FE | +/ R134 | 04/99 ▸ | 8846052040 | **814309** | 494 318 | AL |
| **1.0 i 16V** CAD ▸ | E | 998 | 1SZ-FE | +/ R134 | 01/99 ▸ 12/02 | 8846052010 | **814307** | 489 308 | AL |
| **1.0 i 16V** | E | 998 | 1SZ-FE | +/ R134 | 01/99 ▸ 08/05 | 8846052020 | **817674** | 488 341 | AL |
| **1.3 i 16V** | E | 1299 | 2NZ-FE | +/ R134 | 06/99 ▸ 08/05 | 8846052020 | **817674** | 488 341 | AL |
| **1.3 i 16V** CAD ▸ | E | 1299 | 2NZ-FE | +/ R134 | 06/99 ▸ 12/02 | 8846052010 | **814307** | 489 308 | AL |
| **1.3 i 16V** | E | 1299 | 2NZ-FE, 2SZ-FE | +/ R134 | 11/99 ▸ | 8846052040 | **814309** | 494 318 | AL |
| **1.5 VVTi** | E | 1497 | 1NZ-FE | +/ R134 | 01/01 ▸ 08/05 | 8846052020 | **817674** | 488 341 | AL |
| **1.5 VVTi 16V** CAD ▸ | E | 1497 | 1NZ-FE | +/ R134 | 01/01 ▸ 12/02 | 8846052010 | **814307** | 489 308 | AL |
| **1.4 D-4D** CAD ▸ | D | 1364 | 1NDTV | +/ R134 | 10/01 ▸ 12/02 | 8846052010 | **814307** | 489 308 | AL |
| **1.4 D-4D** | D | 1364 | 1ND-TV | +/ R134 | 12/01 ▸ | 8846052040 | **814309** | 494 318 | AL |
| **YARIS (2005>)** | | | | | | | | | |
| **1.0 VVTi** | E | 998 | 1KR-FE | +/ R134 | 08/05 ▸ | 8846052110 | **814233** | 545 311 | AL |
| **1.0 VVTi** | E | 998 | 1KR-FE | +/ R134 | 11/05 ▸ | 884600D050 | **814223** | 522 311 | AL |
| **1.3 VVTi 16V** | E | 1298 | 2SZ-FE | +/ R134 | 11/05 ▸ 11/08 | 884600D050 | **814223** | 522 311 | AL |
| **1.3 VVTi 100 16V** | E | 1329 | 1NRFE-HTWC | +/ R134 | 11/08 ▸ | 884600D050 | **814223** | 522 311 | AL |
| **1.4 D4-D** | D | 1364 | 1NDTV | +/ R134 | 01/06 ▸ | 884600D060 | **814224** | 522 311 | AL |

Condenser Condenseur Kondensator Condensatore Condensor Condensador КОНДЕНСЕР Kondenser Kondenzátor Condensator Συμπυκνωτής



• **New** Nouveau **Nuevo** Novo **Nuovo** Nieuw **Neu** Nowość **Yeni** Новый Νέο **Novy**

| | | CC | | | | OE | Valeo | DIM | TECH |
|---|---|---|---|---|---|---|---|---|---|
| **TOYOTA (.../...)** | | | | | | | | | |
| **YARIS VERSO** | | | | | | | | | |
| **1.3 i 16V** | E | 1299 | 2NZ-FE | R134 | 08/99 ▸ 08/05 | 8846052020 | **817674** | 488 341 | AL |
| **1.3 i 16V** | E | 1299 | 2NZ-FE | R134 | 08/99 ▸ 09/05 | 8846052010 | **814307** | 489 308 | AL |
| **1.3 i 16V** | E | 1299 | 2NZ-FE | R134 | 11/99 ▸ | 8846052040 | **814309** | 494 318 | AL |
| **1.5 VVT-i 16V** | E | 1497 | 1NZ-FE | R134 | 03/00 ▸ 08/05 | 8846052020 | **817674** | 488 341 | AL |
| **1.5 VVT-i 16V** | E | 1497 | 1NZ-FE | R134 | 03/00 ▸ 09/05 | 8846052010 | **814307** | 489 308 | AL |
| **1.4 D-4D** | D | 1364 | 1ND-TV | R134 | 12/01 ▸ 08/05 | 8846052020 | **817674** | 488 341 | AL |
| **1.4 D-4D** | D | 1364 | 1NDTV | R134 | 10/01 ▸ 09/05 | 8846052010 | **814307** | 489 308 | AL |
| **1.4 D-4D** | D | 1364 | 1ND-TV | R134 | 12/01 ▸ | 8846052040 | **814309** | 494 318 | AL |
| **TOYOTA** | | | | | | | | | |
| **HILUX** | | | | | | | | | |
| **1,8 i** | E | 1812 | 2Y | | 08/88 ▸ 07/94 | 8846035130 | **814245** | 540 268 | AL |
| **2,4 i** | E | 2383 | 22R, 22RE | | 08/88 ▸ 07/94 | 8846035130 | **814245** | 540 268 | AL |
| **2,4 D** | D | 2446 | 2L | | 08/88 ▸ 07/94 | 8846035130 | **814245** | 540 268 | AL |
| **2.4 D,2.4 TD** | D | 2446 | 2L,2L-T | | 08/97 ▸ 08/01 | 8846035200 | **814308** | 534 278 | AL |
| **2.5 D-4D** | D | 2494 | 2KD-FTV | | 08/01 ▸ 02/04 | 8846035280 | **814269** | 534 278 | AL |
| **VAUXHALL** | | | | | | | | | |
| **ASTRA IV (98>2005)** | | | | | | | | | |
| **1.2 i 16V** ▸ 12999999 | E | 1199 | X12XE, Z12XE | R134 | 04/98 ▸ 12/01 | 93170621 | **817505** | 548 381 | AL |
| **1.2 i 16V** | E | 1199 | Z12XE, X12XE | | 01/02 ▸ | 93170608 | **818047** | 555 382 | AL |
| **1.4 i 16V** ▸ 12999999 | E | 1389 | X14XE | R134 | 04/98 ▸ | 93170621 | **817505** | 548 381 | AL |
| **1.4 i 16V** 22000001 ▸ | E | 1389 | X14XE | | 01/02 ▸ | 93170608 | **818047** | 555 382 | AL |
| **1.6 i, 1.6 i 16V** | E | 1598 | X16SZR, X16XEL<br>Z16SE/E2 | R134 | 04/98 ▸ | 93170621 | **817505** | 548 381 | AL |
| **1.6 i, 1.6 i 16V**<br>**1.6 i Twinport 16V** | E | 1598 | Z16XEP(103), X16SZR<br>X16XEL, Z16SE/E2 | | 01/02 ▸ | 93170608 | **818047** | 555 382 | AL |
| **1.8 i 16V** | E | 1796 | Z18XE | R134 | 09/00 ▸ 12/01 | 93170621 | **817505** | 548 381 | AL |
| **1.8 i 16V** | E | 1796 | Z18XE | | 01/02 ▸ | 93170608 | **818047** | 555 382 | AL |
| **1.8 i 16V** ▸ 12999999 | E | 1799 | X18XE, X18XE1 | R134 | 04/98 ▸ 12/01 | 93170621 | **817505** | 548 381 | AL |
| **1.8 i 16V** 22000001 ▸ | E | 1799 | X18XE1 | | 01/02 ▸ | 93170608 | **818047** | 555 382 | AL |
| **2.0 SRi Turbo 16V**<br>**2.0 i 16VTurbo** ▸ 12999999 | E | 1998 | X20XEV, Z20LET-192<br>Z20LET-200 | R134 | 04/98 ▸ | 93170621 | **817505** | 548 381 | AL |
| **2.0 i 16V** 22000001 ▸ | E | 1998 | X20XEV | | 01/02 ▸ | 93170608 | **818047** | 555 382 | AL |
| **2.2 i 16V** | E | 2198 | Z22SE | R134 | 07/00 ▸ 12/01 | 93170621 | **817505** | 548 381 | AL |
| **2.2 i 16V** | E | 2198 | Z22SE | | 01/02 ▸ | 93170608 | **818047** | 555 382 | AL |
| **1.7 D Turbo, 1.7 DTi 16V** | D | 1686 | X17DTL, Y17DT | | 04/98 ▸ | 93170622 | **817506** | 414 371 | AL |
| **2.0 Di 16V** | D | 1995 | X20DTL, Y20DTL | R134 | 04/98 ▸ | 93170621 | **817505** | 548 381 | AL |
| **2.0 Di 16V** 22000001 ▸ | D | 1995 | X20DTL, Y20DTL | | 01/02 ▸ | 93170608 | **818047** | 555 382 | AL |
| **ASTRA V (2004>)** | | | | | | | | | |
| **1.4 Twinport** | E | 1364 | Z14XEP | R134 | 03/04 ▸ | 93178958 | **817839** | 548 381 | AL |
| **1.6 i Twinport** | E | 1598 | Z16XEP | R134 | 03/04 ▸ | 93178958 | **817839** | 548 381 | AL |
| **1.8 i** | E | 1796 | Z18XE | R134 | 03/04 ▸ | 93178958 | **817839** | 548 381 | AL |
| **1.8 i 16V** | E | 1796 | Z18XER | R134 | 09/05 ▸ | 93178959 | **817846** | 588 381 | AL |
| **2.0 T, 2.0 i Turbo 16V** | E | 1998 | Z20LEL-170<br>Z20LER-200 | R134 | 03/04 ▸ | 93178960 | **818114** | 588 381 | AL |
| **2.0 i Turbo 16V** | E | 1998 | Z20LEH | R134 | 03/05 ▸ | 93182213 | **818168** | 520 331 | AL |
| **1.3 CDTi 16V** | D | 1248 | Z13DTH | R134 | 08/05 ▸ | 93182213 | **818168** | 520 331 | AL |
| **1.7 CDTI** | D | 1686 | Z17DTH, Z17DTL | R134 | 03/04 ▸ | 93178961 | **817847** | 368 381 | AL |
| **1.9 CDTI, 1.9 CDTi 16V** | D | 1910 | Z19DTH, Z19DTL | R134 | 03/04 ▸ | 93182213 | **818168** | 520 331 | AL |
| **1.9 CDTI, 1.9 CDTI 16V** | D | 1910 | Z19DT, Z19DTH<br>Z19DTJ | R134 | 01/06 ▸ | 93178961 | **817847** | 368 381 | AL |
| **ASTRA VI (2009>)** | | | | | | | | | |
| **1.4 i Turbo 16V** | E | 1364 | A14NET | | 01/10 ▸ | 13267649 | **814202** | 668 401 | |
| **1.4 i Turbo 16V** | E | 1364 | A14NET | | 01/10 ▸ | 13267648 | **814201** | 568 401 | |
| **1.4 i 100 16V,1.4 i 87 16V** | E | 1398 | A14XER | | 09/09 ▸ | 13267648 | **814201** | 568 401 | |
| **1.6 i 16V** | E | 1598 | A16XER | | 09/09 ▸ | 13267649 | **814202** | 668 401 | |

# VAUXHALL (.../...)

## ASTRA VI (2009>) (.../...)

| | | CC | | | | OE | Valeo | DIM | TECH |
|---|---|---|---|---|---|---|---|---|---|
| **1.6 i 16V,1.6 i Turbo 16V** | E | 1598 | A16LET,A16XER | | 09/09 ▸ | 13267648 | **814201** | 568 401 | |
| **1.3 CDTi ecoFLEX 16V** | D | 1248 | A13DTE/F | | 01/10 ▸ | 13267648 | **814201** | 568 401 | |
| **1.7 CDTi 110 16V** | D | 1686 | A17DTJ/F | | 09/09 ▸ | 13267648 | **814201** | 568 401 | |
| **1.7 CDTi 16V** | D | 1686 | A17DTR | | 09/09 ▸ | 13267649 | **814202** | 668 401 | |
| **2.0 CDTi 16V** | D | 1956 | A20DTH/F | | 01/10 ▸ | 13267649 | **814202** | 668 401 | |

## CORSA I (93>2000)

| | | | | | | | | | |
|---|---|---|---|---|---|---|---|---|---|
| **1.0 i 12V** | E | 973 | X10XE | | 04/97 ▸ 08/00 | 90511659 | **816902** | 600 305 | AL |
| **1.2 i** ▸ R4147676 | E | 1196 | C12NZ | | 04/93 ▸ 01/94 | 90541114 | **816924** | 600 274 | AL |
| **1.2 i** R4147617 ▸ | E | 1196 | C12NZ | | 08/93 ▸ 08/98 | 90511659 | **816902** | 600 305 | AL |
| **1.2 i 16V** | E | 1199 | X12XE | | 04/97 ▸ 08/00 | 90511659 | **816902** | 600 305 | AL |
| **1.4 i** ▸ R4147676 | E | 1389 | C14SE,C14NZ | | 04/93 ▸ 01/94 | 90541114 | **816924** | 600 274 | AL |
| **1.4 i, 1.4 i 16V** | E | 1389 | X14XE, C14NZ, C14SE | | 04/93 ▸ 08/00 | 90511659 | **816902** | 600 305 | AL |
| **1.6 i 16V** ▸ R4147676 | E | 1598 | C16XE | | 08/93 ▸ 01/94 | 90541114 | **816924** | 600 274 | AL |
| **1.6 i 16V** R4147617 ▸ | E | 1598 | C16XE, X16XE | | 08/93 ▸ 08/00 | 90511659 | **816902** | 600 305 | AL |
| **1.5 D, 1.5 D Turbo** ▸ R4147676 | D | 1488 | 15TD, 15D | | 04/93 ▸ 01/94 | 90541114 | **816924** | 600 274 | AL |
| **1.5 D, 1.5 D Turbo** | D | 1488 | 15D, 15TD, X15DT | | 04/93 ▸ 08/00 | 90511659 | **816902** | 600 305 | AL |
| **1.7 D** | D | 1699 | 17D | | 02/96 ▸ 08/00 | 90511659 | **816902** | 600 305 | AL |

## CORSA II (2000>2003)

| | | | | | | | | | |
|---|---|---|---|---|---|---|---|---|---|
| **1.0 i 12V** | E | 973 | Z10XE | +/ R134 | 09/00 ▸ 08/03 | 93175776 | **817609** | 548 381 | AL |
| **1.2 i 16V** | E | 1199 | Z12XE | +/ R134 | 09/00 ▸ 08/03 | 93175776 | **817609** | 548 381 | AL |
| **1.4 i 16V** | E | 1389 | Z14XE | +/ R134 | 09/00 ▸ 08/03 | 93175776 | **817609** | 548 381 | AL |
| **1.8 i 16V** | E | 1796 | Z18XE | +/ R134 | 09/00 ▸ 08/03 | 93175776 | **817609** | 548 381 | AL |
| **1.7 Di 16V** 33064409 ▸ | D | 1686 | Y17DTL | +/ R134 | 09/00 ▸ 08/03 | 93175774 | **818118** | 588 381 | AL |

## CORSA II (2003>2006)

| | | | | | | | | | |
|---|---|---|---|---|---|---|---|---|---|
| **1.0 i 12V** | E | 998 | Z10XE | +/ R134 | 01/04 ▸ | 1850114 | **814066** | 545 380 | AL |
| **1.2 i 16V** | E | 1199 | Z12XE | +/ R134 | 09/04 ▸ | 1850114 | **814066** | 545 380 | AL |
| **1.4 i 16V** | E | 1229 | Z14XE | +/ R134 | 01/04 ▸ | 1850114 | **814066** | 545 380 | AL |
| **1.0 i, 1.0 i Twinport 12V** | E | 998 | Z10XEP | +/ R134 | 09/03 ▸ 12/03 | 93183711 | **817843** | 548 381 | AL |
| **1.2 i 16V** | E | 1199 | Z12XE | +/ R134 | 09/03 ▸ 12/03 | 93175776 | **817609** | 548 381 | AL |
| **1.2 i 16V** | E | 1199 | Z12XE | +/ R134 | 01/04 ▸ | 93183711 | **817843** | 548 381 | AL |
| **1.4 i Twinport 16V** | E | 1364 | Z14XEP | +/ R134 | 09/03 ▸ 12/03 | 93183711 | **817843** | 548 381 | AL |
| **1.8 i 16V** | E | 1796 | Z18XE | +/ R134 | 09/03 ▸ 12/03 | 93175776 | **817609** | 548 381 | AL |
| **1.8 i 16V** | E | 1796 | Z18XE | +/ R134 | 01/04 ▸ | 93183711 | **817843** | 548 381 | AL |
| **1.3 CDTI 16V** | D | 1248 | Z13DT | +/ R134 | 09/03 ▸ | 93177423 | **817844** | 548 261 | AL |
| **1.7 Di** 33064409 ▸ | D | 1686 | Y17DTL | +/ R134 | 09/03 ▸ | 93175774 | **818118** | 588 381 | AL |
| **1.7 CDTI 16V** | D | 1686 | Z17DTH | +/ R134 | 09/03 ▸ | 93177423 | **817844** | 548 261 | AL |

## CORSA IV (2006>)

| | | | | | | | | | |
|---|---|---|---|---|---|---|---|---|---|
| **1.0 i Twinport 12V** | E | 998 | Z10XEP | +/ R134 | 07/06 ▸ | 55700406 | **818193** | 570 353 | AL |
| **1.2 i Twinport 16V** | E | 1229 | Z12XEP | +/ R134 | 07/06 ▸ | 55700406 | **818193** | 570 353 | AL |
| **1.4 i Twinport 16V** | E | 1364 | Z14XEP | +/ R134 | 07/06 ▸ | 55700406 | **818193** | 570 353 | AL |
| **1.3 CDTi 75 16V, 1.3 CDTi 90 16V** | D | 1248 | Z13DTH, Z13DTJ | +/ R134 | 07/06 ▸ | 55700408 | **818192** | 540 263 | AL |
| **1.7 CDTi 125 16V** | D | 1686 | Z17DTR | +/ R134 | 07/06 ▸ | 55700408 | **818192** | 540 263 | AL |

## SIGNUM (2003>2005)

| | | | | | | | | | |
|---|---|---|---|---|---|---|---|---|---|
| **2.0 i Turbo 16V** | E | 1998 | Z20NET | +/ R134 | 06/03 ▸ | 24418364 | **817852** | 610 410 | AL |
| **2.2 DIG 16V** | E | 2198 | Z22YH | +/ R134 | 06/03 ▸ | 24418362 | **817647** | 658 411 | AL |
| **3.2 i V6 24V** | E | 3175 | Z32SE | +/ R134 | 06/03 ▸ | 24418362 | **817647** | 658 411 | AL |
| **1.9 CDTI, 1.9 CDTi 16V** | D | 1910 | Z19DTH, Z19DTJ | +/ R134 | 04/04 ▸ | 13114943 | **817809** | 619 417 | AL |
| **2.0 DTi 16V** | D | 1995 | Y20DTH | +/ R134 | 06/03 ▸ | 24418363 | **817648** | 658 411 | AL |
| **2.2 DTi 16V** | D | 2171 | Y22DTR | +/ R134 | 06/03 ▸ | 24418363 | **817648** | 658 411 | AL |
| **3.0 CDTi V6 24V** | D | 2958 | Y30DT | +/ R134 | 06/03 ▸ | 13106817 | **817853** | 478 401 | AL |

## SIGNUM B (2005>)

| | | | | | | | | | |
|---|---|---|---|---|---|---|---|---|---|
| **1.8 i 16V** | E | 1796 | Z18XE | +/ R134 | 10/05 ▸ | 24418362 | **817647** | 658 411 | AL |
| **2.0 i Turbo 16V** | E | 1998 | Z20NET | +/ R134 | 10/05 ▸ | 24418364 | **817852** | 610 410 | AL |
| **2.2 DGI 16V** | E | 2198 | Z22YH | +/ R134 | 10/05 ▸ | 24418362 | **817647** | 658 411 | AL |

Condenser Condenseur Kondensator Condensatore Condensor Condensador КОНДЕНСЕР Kondenser Kondenzátor Condensator Συμπυκνωτής



• **New** Nouveau **Nuevo** Novo **Nuovo** Nieuw **Neu** Nowość **Yeni** Новый Νέο **Novy**

# VAUXHALL (.../...)

| | | CC | | | | OE | Valeo | DIM | TECH |
|---|---|---|---|---|---|---|---|---|---|
| **SIGNUM B (2005>) (.../...)** | | | | | | | | | |
| **1.9 CDTI, 1.9 CDTI 16V** | D | 1910 | Z19DTH, Z19DT | +/ R134 | 10/05 ▸ | 13114943 | **817809** | 619 417 | AL |
| **TIGRA** | | | | | | | | | |
| **1.4 i 16V** | E | 1389 | X14XE | | 11/94 ▸ 01/01 | 90541114 | **816924** | 600 274 | AL |
| **1.6 i 16V** | E | 1598 | X16XE | | 11/94 ▸ 01/01 | 90511660 | **816924** | 600 274 | AL |
| **TIGRA TWINTOP** | | | | | | | | | |
| **1.4 i Twinport 16V** | E | 1364 | Z14XEP | +/ R134 | 07/04 ▸ 12/04 | 93177215 | **817843** | 548 381 | AL |
| **1.8 i 16V** | E | 1796 | Z18XE | +/ R134 | 07/04 ▸ 12/04 | 93177215 | **817843** | 548 381 | AL |
| **1.3 CDTi Twinport 16V** | D | 1248 | Z13DT | +/ R134 | 07/04 ▸ | 93177423 | **817844** | 548 261 | AL |
| **VECTRA (95>2002)** | | | | | | | | | |
| **2.0 TDi 16V, 2.0 DTi 16V** | D | 1995 | X20DTH, Y20DTH | +/ R134 | 09/97 ▸ 06/03 | 52484484 | **817670** | 510 370 | AL |
| **2.2 DTI 16V** | D | 2171 | Y22DTR | +/ R134 | 09/00 ▸ 06/03 | 52484484 | **817670** | 510 370 | AL |
| **VECTRA (2002>2005)** | | | | | | | | | |
| **1.8 i 16V** | E | 1796 | Z18XE | +/ R134 | 04/02 ▸ | 24418362 | **817647** | 658 411 | AL |
| **2.0 i Turbo 16V** | E | 1998 | Z20NET | +/ R134 | 05/03 ▸ | 24418364 | **817852** | 610 410 | AL |
| **2.2 DGI 16V, 2.2 i 16V** | E | 2198 | Z22SE, Z22YH | +/ R134 | 04/02 ▸ | 24418362 | **817647** | 658 411 | AL |
| **3.2 i V6 24V** | E | 3175 | Z32SE | +/ R134 | 04/02 ▸ | 24418362 | **817647** | 658 411 | AL |
| **1.9 CDTI, 1.9 CDTI 16V** | D | 1910 | Z19DTH, Z19DTJ | +/ R134 | 04/04 ▸ | 13114943 | **817809** | 619 417 | AL |
| **2.0 DTI 16V** | D | 1995 | Y20DTH | +/ R134 | 04/02 ▸ | 24418363 | **817648** | 658 411 | AL |
| **2.2 DTI 16V** | D | 2171 | Y22DTR | +/ R134 | 04/02 ▸ | 24418363 | **817648** | 658 411 | AL |
| **3.0 CDTi V6 24V** | D | 2958 | Y30DT | +/ R134 | 07/03 ▸ | 13106817 | **817853** | 478 401 | AL |
| **VECTRA C (2005>)** | | | | | | | | | |
| **1.6 i 16V** | E | 1598 | Z16XE | +/ R134 | 10/05 ▸ | 24418362 | **817647** | 658 411 | AL |
| **1.8 i 16V** | E | 1796 | Z18XE | +/ R134 | 10/05 ▸ | 24418362 | **817647** | 658 411 | AL |
| **2.0 i Turbo 16V** | E | 1998 | Z20NET | +/ R134 | 10/05 ▸ | 24418364 | **817852** | 610 410 | AL |
| **2.2 DGI 16V** | E | 2198 | Z22YH | +/ R134 | 10/05 ▸ | 24418362 | **817647** | 658 411 | AL |
| **1.9 CDTI, 1.9 CDTI 16V** | D | 1910 | Z19-100,Z19DTH<br>Z19DTL | +/ R134 | 10/05 ▸ | 13114943 | **817809** | 619 417 | AL |
| **ZAFIRA (99>2003)** | | | | | | | | | |
| **1.6 i 16V** | E | 1598 | X16XEL | +/ R134 | 05/99 ▸ 01/02 | 93170621 | **817505** | 548 381 | AL |
| **1.6 i 16V**<br>22000001 ▸ | E | 1598 | X16XEL | | 01/02 ▸ 06/03 | 93170608 | **818047** | 555 382 | AL |
| **1.8 i 16V** | E | 1796 | Z18XE | | 01/02 ▸ 06/03 | 93170608 | **818047** | 555 382 | AL |
| **1.8 i 16V** | E | 1799 | X18XE1 | +/ R134 | 05/99 ▸ 12/01 | 93170621 | **817505** | 548 381 | AL |
| **1.8 i 16V**<br>22000001 ▸ | E | 1799 | X18XE1 | | 01/02 ▸ | 93170608 | **818047** | 555 382 | AL |
| **2.0 i Turbo 16V** | E | 1998 | Z20LET-192<br>Z20LET-200 | +/ R134 | 10/01 ▸ 06/03 | 93170621 | **817505** | 548 381 | AL |
| **2.2 i 16V** | E | 2198 | Z22SE | +/ R134 | 08/00 ▸ 12/01 | 93170621 | **817505** | 548 381 | AL |
| **2.2 i 16V** | E | 2198 | Z22SE | | 01/02 ▸ 06/03 | 93170608 | **818047** | 555 382 | AL |
| **2.0 Di**<br>▸ 12999999 | D | 1995 | X20DTL | +/ R134 | 05/99 ▸ 01/02 | 93170621 | **817505** | 548 381 | AL |
| **2.0 Di**<br>22000001 ▸ | D | 1995 | X20DTL | | 01/02 ▸ 06/03 | 93170608 | **818047** | 555 382 | AL |
| **ZAFIRA (2003>2005)** | | | | | | | | | |
| **1.6 i 16V** | E | 1598 | Z16XE | | 07/03 ▸ 06/05 | 93170608 | **818047** | 555 382 | AL |
| **1.8 i 16V** | E | 1796 | Z18XE | | 07/03 ▸ 06/05 | 93170608 | **818047** | 555 382 | AL |
| **2.2 i 16V** | E | 2198 | Z22SE | | 07/03 ▸ 06/05 | 93170608 | **818047** | 555 382 | AL |
| **2.2 DTI 16V** | D | 2171 | Y22DTR, Y22DTR-117 | | 07/03 ▸ 06/05 | 93170622 | **817506** | 414 371 | AL |
| **ZAFIRA II (2005>)** | | | | | | | | | |
| **1.6 i Twinport 16V** | E | 1598 | Z16XEP | +/ R134 | 07/05 ▸ | 93178958 | **817839** | 548 381 | AL |
| **1.8 i 16V** | E | 1796 | Z18XER | +/ R134 | 09/05 ▸ | 93178958 | **817839** | 548 381 | AL |
| **2.0 i Turbo 16V** | E | 1998 | Z20LER | +/ R134 | 07/05 ▸ | 93178960 | **818114** | 588 381 | AL |
| **2.0 Turbo 16V** | E | 1998 | Z20LEH | +/ R134 | 07/05 ▸ | 93182213 | **818168** | 520 331 | AL |
| **2.2 i 16V** | E | 2198 | Z22YH | R134 | 07/05 ▸ | 93178959 | **817846** | 588 381 | AL |
| **1.9 CDTI, 1.9 CDTi 16V** | D | 1910 | Z19DTL, Z19DT<br>Z19DTH | +/ R134 | 07/05 ▸ | 93182213 | **818168** | 520 331 | AL |

| | | CC | | | | OE | Valeo | DIM | TECH |
|---|---|---|---|---|---|---|---|---|---|
| **VAUXHALL** | | | | | | | | | |
| **COMBO (93>2001)** | | | | | | | | | |
| **1.4 i** | E | 1389 | C14NZ | | 10/93 ▸ 09/01 | 93250611 | **816902** | 600 305 | AL |
| **1.7 D** | D | 1699 | 17D | | 10/93 ▸ 09/01 | 93250611 | **816902** | 600 305 | AL |
| **COMBO (2002>)** | | | | | | | | | |
| **1.4 i Twinport 16V** | E | 1364 | Z14XEP | +/ R134 | 07/04 ▸ | 93183711 | **817843** | 548 381 | AL |
| **1.6 i** | E | 1598 | Z16SE/E4 | +/ R134 | 10/01 ▸ 06/04 | 93175776 | **817609** | 548 381 | AL |
| **1.3 CDTi 16V** | D | 1248 | Z13DT, Z13DTJ | +/ R134 | 07/04 ▸ | 93177423 | **817844** | 548 261 | AL |
| **1.7 DTi 16V** | D | 1686 | Y17DT | +/ R134 | 10/01 ▸ | 93175774 | **818118** | 588 381 | AL |
| **MOVANO** | | | | | | | | | |
| **1.9 Dti** | D | 1870 | F9Q.7.72 | | 08/00 ▸ 07/02 | 9109424 | **817689** | 694 381 | AL |
| **2.5 D** | D | 2445 | S8U.7.72 | | 10/98 ▸ 10/01 | 9161208 | **817065** | 690 376 | AL |
| **2.5 Dti 16V** ▸ B425013 | D | 2463 | G9U.7.20 | | 10/01 ▸ | 9109424 | **817689** | 694 381 | AL |
| **2.8 Dti** | D | 2800 | S9W.7.02 | | 08/00 ▸ 10/01 | 9109424 | **817689** | 694 381 | AL |
| **VIVARO** | | | | | | | | | |
| **2.0 i 16V** | E | 1998 | F4R.7.20 | | 08/01 ▸ | 91166018 | **817577** | 574 437 | AL |
| **2.0 i 16V** | E | 1998 | F4R.7.20 | | 08/01 ▸ | 91168643 | **817644** | 573 442 | AL |
| **1.9 DI, 1.9 DTI** | D | 1896 | F9Q.7.60, F9Q.7.62 | | 08/01 ▸ | 91166018 | **817577** | 574 437 | AL |
| **1.9 DI, 1.9 DTI** | D | 1896 | F9Q.7.60, F9Q.7.62 | | 08/01 ▸ | 91168643 | **817644** | 573 442 | AL |
| **VIVARO (2006>)** | | | | | | | | | |
| **2.0 CDTi 16V** | D | 1995 | M9R.7.80 | | 07/06 ▸ | 93857127 | **814172** | 545 440 | AL |
| **2.5 CDTi 16V** | D | 2464 | G9U.6.30 | | 07/06 ▸ | 93857126 | **814171** | | AL |
| **VOLKSWAGEN** | | | | | | | | | |
| **BORA** | | | | | | | | | |
| **1.4 i 16V** | E | 1390 | AHW, AKQ, APE, AXP BCA | | 09/98 ▸ 04/02 | 1J0820413N | **817244** | 548 361 | AL |
| **1.6 FSI, 1.6 FSI 16V, 1.6 i 1.6 i 16V** | E | 1595 | AEH, AKL, APF, ATN AUS, AVU, AZD, BAD BCB | | 09/98 ▸ 04/02 | 1J0820413N | **817244** | 548 361 | AL |
| **1.8 i 20V, 1.8 i Turbo 20V** | E | 1781 | AGN, AGU, ARX, AUM | | 02/99 ▸ 04/02 | 1J0820413N | **817244** | 548 361 | AL |
| **2.0 i** | E | 1984 | APK, AQY, AZH, AZJ | | 09/98 ▸ 04/02 | 1J0820413N | **817244** | 548 361 | AL |
| **2.3 i V5, 2.3 i V5 20V** | E | 2324 | AGZ, AQN | | 09/98 ▸ 04/02 | 1J0820413N | **817244** | 548 361 | AL |
| **2.8 i VR6, 2.8 i VR6 24V** | E | 2792 | AQP, AUE, BDE | | 05/99 ▸ 04/02 | 1J0820413N | **817244** | 548 361 | AL |
| **1.9 SDi, 1.9 TDi** | D | 1896 | AGP/R, AHF, AJM, ALH AQM, ASV/Z, ATD AUY, AXR | | 09/98 ▸ 04/02 | 1J0820413N | **817244** | 548 361 | AL |
| **EOS** | | | | | | | | | |
| **1.6 FSI 16V** | E | 1598 | BLF | +/ R134 | 05/06 ▸ | 1K0820411H | **817777** | 584 401 | AL |
| **2.0 FSi 16V, 2.0 TFSi 16V** | E | 1984 | BVY, BVZ, BWA | +/ R134 | 05/06 ▸ | 1K0820411H | **817777** | 584 401 | AL |
| **3.2 i V6** | E | 3200 | BUB | +/ R134 | 05/06 ▸ | 1K0820411H | **817777** | 584 401 | AL |
| **2.0 Tdi 16V** | D | 1968 | BMM | +/ R134 | 05/06 ▸ | 1K0820411H | **817777** | 584 401 | AL |
| **FOX** | | | | | | | | | |
| **1.2 i** | E | 1198 | BMD | +/ R134 | 11/04 ▸ | 6Q0820411K | **817686** | 468 361 | AL |
| **1.4 i** | E | 1400 | BKR | +/ R134 | 11/04 ▸ | 6Q0820411K | **817686** | 468 361 | AL |
| **1.4 TDi** | D | 1422 | BNM | +/ R134 | 11/04 ▸ | 6Q0820411K | **817686** | 468 361 | AL |
| **GOLF II CABRIOLET (93>98)** | | | | | | | | | |
| **1.6 i** | E | 1598 | AEK, AFT, AKS | | 07/94 ▸ 02/98 | 1H0820413 | **816910** | 548 361 | AL |
| **1.8 i** | E | 1781 | AAM, ABS, ADZ, ANN ANP | | 09/93 ▸ 02/98 | 1H0820413 | **816910** | 548 361 | AL |
| **2.0 i** | E | 1984 | ADY, 2E, AGG, AKR | | 09/93 ▸ 02/98 | 1H0820413 | **816910** | 548 361 | AL |
| **1.9 TDi** | D | 1896 | AFN, 1Z, AHU, ALE | | 08/95 ▸ 02/98 | 1H0820413 | **816910** | 548 361 | AL |
| **GOLF III (91>97)** | | | | | | | | | |
| **1.4, 1.4 i** | E | 1391 | ABD | | 11/91 ▸ 07/95 | 1H0820413 | **816910** | 548 361 | AL |
| **1.4, 1.4 i** | E | 1391 | AEX, APQ | | 07/95 ▸ 12/97 | 1H1820413 | **816910** | 548 361 | AL |
| **1.6, 1.6 i** | E | 1598 | AFT, ABU, AEA/E/K AKS | | 11/91 ▸ 12/97 | 1H1820413 | **816910** | 548 361 | AL |
| **1.8, 1.8 i** | E | 1781 | ABS, AAM, ACC, ADZ ANN/P | | 11/91 ▸ | 1H1820413 | **816910** | 548 361 | AL |

Condenser Condenseur Kondensator Condensatore Condensor Condensador КОНДЕНСЕР Kondenser Kondenzátor Condensator Συμπυκνωτής



• **New** Nouveau **Nuevo** Novo **Nuovo** Nieuw **Neu** Nowość **Yeni** Новый Νέο **Novy**

# VOLKSWAGEN (.../...)

## GOLF III (91>97) (.../...)

| | | CC | | | | OE | Valeo | DIM | TECH |
|---|---|---|---|---|---|---|---|---|---|
| **2.0 16V, 2.0 E, 2.0 i** | E | 1984 | 2E, ABF, ADY, AEP AGG, AKR | | 11/91 ▸ 12/97 | 1H1820413 | **816910** | 548 361 | AL |
| **2.8 VR6** | E | 2792 | AAA | | 01/92 ▸ 12/97 | 1H1820413 | **816910** | 548 361 | AL |
| **2.9 i VR6** 1HRR480001 ▸ | E | 2861 | ABV | | 01/94 ▸ | 1H0820413 | **816910** | 548 361 | AL |
| **1.9 D, 1.9 D Ecomatic, 1.9 SDi 1.9 SDi Ecomatic, 1.9 TD 1.9 TDi** | D | 1896 | 1Y, 1Z, AAZ, AEY AFN, AHU, ALE | | 11/91 ▸ 12/97 | 1H1820413 | **816910** | 548 361 | AL |

## GOLF III CABRIOLET (98>2002)

| | | | | | | | | | |
|---|---|---|---|---|---|---|---|---|---|
| **1.6 i** | E | 1598 | AFT, AKS | N | 03/98 ▸ 10/00 | 1HM820413B | **817024** | 565 338 | AL |
| **1.8 i** | E | 1781 | ADZ, AAM, ANN, ANP | N | 03/98 ▸ 10/00 | 1HM820413B | **817024** | 565 338 | AL |
| **2.0 i** | E | 1984 | AGG, AKR, ATU, AWF AWG | N | 03/98 ▸ 06/02 | 1HM820413B | **817024** | 565 338 | AL |
| **1.9 TDi** | D | 1896 | AFN, AHU, ALE, AVG | N | 03/98 ▸ 12/01 | 1HM820413B | **817024** | 565 338 | AL |

## GOLF IV (97>2003)

| | | | | | | | | | |
|---|---|---|---|---|---|---|---|---|---|
| **1.4 i 16V** | E | 1390 | AHW, AKQ, APE, AXP BCA | | 10/97 ▸ | 1J0820413N | **817244** | 548 361 | AL |
| **1.6 FSI, 1.6 i, 1.6 i 16V** | E | 1595 | BCB, AEH, AKL, APF ATN, AUS, AVU, AZD BAD, BFQ | | 10/97 ▸ | 1J0820413N | **817244** | 548 361 | AL |
| **1.8 i, 1.8 i 20V, 1.8 i Turbo 1.8 i Turbo 20V** | E | 1781 | ARZ, AGN, AGU, AUM AUQ | | 10/97 ▸ | 1J0820413N | **817244** | 548 361 | AL |
| **2.0 i** | E | 1984 | AZH, APK, AQY, AZG AZJ, BEH | | 08/98 ▸ | 1J0820413N | **817244** | 548 361 | AL |
| **2.3 i VR5, 2.3 i VR5 20V** | E | 2324 | AQN, AGZ | | 10/97 ▸ | 1J0820413N | **817244** | 548 361 | AL |
| **2.8 i V6, 2.8 i VR6** | E | 2792 | AUE, AQP, BDE | | 05/99 ▸ | 1J0820413N | **817244** | 548 361 | AL |
| **3.2 i V6 R32** | E | 3189 | BFH | | 06/02 ▸ | 1J0820413N | **817244** | 548 361 | AL |
| **1.9 SDi, 1.9 TDi** | D | 1896 | ASV/Z, AGP/R, AHF AJM, ALH, AQM, ATD AUY, AXR | | 10/97 ▸ | 1J0820413N | **817244** | 548 361 | AL |

## GOLF V (2003>)

| | | | | | | | | | |
|---|---|---|---|---|---|---|---|---|---|
| **1.4 FSI 16V, 1.4 i 16V** | E | 1390 | BKG, BCA, BLN | +/ R134 | 10/03 ▸ | 1K0820411H | **817777** | 584 401 | AL |
| **1.4 TSi 16V** | E | 1390 | BLG, BMY | +/ R134 | 11/05 ▸ | 1K0820411H | **817777** | 584 401 | AL |
| **1.6 i** | E | 1595 | BGU, BSE, BSF | +/ R134 | 01/04 ▸ | 1K0820411H | **817777** | 584 401 | AL |
| **1.6 FSI 16V** | E | 1598 | BLP, BAG, BLF | +/ R134 | 10/03 ▸ | 1K0820411H | **817777** | 584 401 | AL |
| **1.6 FSI 16V** 1K-5-600 00 ▸ | E | 1598 | BHY | +/ R134 | 04/04 ▸ 05/05 | 1K0820411H | **817777** | 584 401 | AL |
| **2.0 FSI 16V, 2.0 i 16V 2.0 TFSi** | E | 1984 | BLX, AXW, AXX, BLR BLY | +/ R134 | 10/03 ▸ | 1K0820411H | **817777** | 584 401 | AL |
| **3.2 i VR6 24V** | E | 3189 | BUB | +/ R134 | 11/05 ▸ | 1K0820411H | **817777** | 584 401 | AL |
| **1.9 TDI** | D | 1896 | BKC, BJB, BLS,BXE BXF, BRU | +/ R134 | 10/03 ▸ | 1K0820411H | **817777** | 584 401 | AL |
| **2.0 SDi, 2.0 TDI 16V** | D | 1968 | BKD, AZV, BDK, BMM BNM | +/ R134 | 10/03 ▸ | 1K0820411H | **817777** | 584 401 | AL |

## GOLF PLUS

| | | | | | | | | | |
|---|---|---|---|---|---|---|---|---|---|
| **1.4 FSI 16V, 1.4 i 16V** | E | 1390 | BCA, BLN | +/ R134 | 01/05 ▸ | 1K0820411H | **817777** | 584 401 | AL |
| **1.4 TSi 16V** | E | 1390 | BLG, BMY | +/ R134 | 05/06 ▸ | 1K0820411H | **817777** | 584 401 | AL |
| **1.6 i** | E | 1595 | BSE, BSF | +/ R134 | 01/05 ▸ | 1K0820411H | **817777** | 584 401 | AL |
| **1.6 FSI 16V** | E | 1598 | BLF | +/ R134 | 01/05 ▸ | 1K0820411H | **817777** | 584 401 | AL |
| **2.0 FSi 16V** | E | 1984 | BLR, BLY, BVY, BVZ | +/ R134 | 01/05 ▸ | 1K0820411H | **817777** | 584 401 | AL |
| **1.9 Tdi** | D | 1896 | BLS, BKC, BRU, BXE BXF | +/ R134 | 01/05 ▸ | 1K0820411H | **817777** | 584 401 | AL |
| **2.0 Tdi 16V** | D | 1968 | AZV, BEE, BKD, BMM BVB | +/ R134 | 01/05 ▸ | 1K0820411H | **817777** | 584 401 | AL |

## JETTA (2005>)

| | | | | | | | | | |
|---|---|---|---|---|---|---|---|---|---|
| **1.4 TSi 16V** | E | 1390 | BLG, BMY | +/ R134 | 07/06 ▸ | 1K0820411H | **817777** | 584 401 | AL |
| **1.6 i** | E | 1598 | BSF, BSE | +/ R134 | 08/05 ▸ | 1K0820411H | **817777** | 584 401 | AL |
| **1.6 FSi** | E | 1598 | BLF | +/ R134 | 08/05 ▸ | 1K0820411H | **817777** | 584 401 | AL |
| **2.0 FSi, 2.0 TFSi 16V** | E | 1984 | BLR, BLY, BWA | +/ R134 | 08/05 ▸ | 1K0820411H | **817777** | 584 401 | AL |
| **1.9 Tdi** | D | 1896 | BLS, BKC | +/ R134 | 08/05 ▸ | 1K0820411H | **817777** | 584 401 | AL |
| **2.0 Tdi 16V** | D | 1968 | AZV, BKD, BMM | +/ R134 | 08/05 ▸ | 1K0820411H | **817777** | 584 401 | AL |

# VOLKSWAGEN (.../...)

## LUPO

| | | CC | | | | OE | Valeo | DIM | TECH |
|---|---|---|---|---|---|---|---|---|---|
| **1.0 i** | E | 999 | AUC, ALD | | 05/00 ▸ | 6X0820413A | **817247** | 350 358 | AL |
| **1.4 i, 1.4 i 16V** | E | 1390 | AUB, AFK, AHW, APE AUA, AUD, BBY | | 05/99 ▸ | 6X0820413A | **817247** | 350 358 | AL |
| **1.4 FSI 16V** | E | 1390 | ARR | | 09/00 ▸ 11/03 | 6X0820413 | **817246** | 390 369 | AL |
| **1.6 i 16V** | E | 1598 | AVY | | 06/00 ▸ | 6X0820413A | **817247** | 350 358 | AL |
| **1.2 TDi** | D | 1191 | ANY, AYZ | | 05/99 ▸ | 6X0820413 | **817246** | 390 369 | AL |
| **1.4 TDi** | D | 1422 | AMF | | 05/99 ▸ | 6X0820413 | **817246** | 390 369 | AL |
| **1.7 SDi** | D | 1716 | AKU | | 05/00 ▸ | 6X0820413A | **817247** | 350 358 | AL |

## NEW BEETLE (98>2001)

| | | | | | | | | | |
|---|---|---|---|---|---|---|---|---|---|
| **1.6 i** | E | 1595 | AWH, AYD | | 11/99 ▸ 05/01 | 1C0820413A | **817427** | 548 361 | AL |
| **1.8 i Turbo 20V** | E | 1781 | AWV, APH, AVC, AWU | | 01/99 ▸ 05/01 | 1C0820413A | **817427** | 548 361 | AL |
| **2.0 i** | E | 1984 | AQY, AEG, APK | | 01/98 ▸ 05/01 | 1C0820413A | **817427** | 548 361 | AL |
| **3.2 i V6 24V** | E | 3189 | AXJ | | 10/00 ▸ 05/01 | 1C0820413A | **817427** | 548 361 | AL |
| **1.9 TDi** | D | 1896 | ALH | | 11/98 ▸ 05/01 | 1C0820413A | **817427** | 548 361 | AL |
| **1.9 TDi** | D | 1896 | ATD | | 10/00 ▸ 05/01 | 1J0820413N | **817244** | 548 361 | AL |

## NEW BEETLE (2001>2005)

| | | | | | | | | | |
|---|---|---|---|---|---|---|---|---|---|
| **1.6 i** | E | 1595 | AYD, BFS | | 06/01 ▸ | 1C0820413A | **817427** | 548 361 | AL |
| **1.8 i Turbo 20V** | E | 1781 | AWU, AWP, AWV | | 06/01 ▸ | 1C0820413A | **817427** | 548 361 | AL |
| **2.0 i** | E | 1984 | AZJ, AEG, APK, AQY BEJ/R | | 06/01 ▸ | 1C0820413A | **817427** | 548 361 | AL |
| **1.9 TDi** | D | 1896 | ALH | | 06/01 ▸ | 1C0820413A | **817427** | 548 361 | AL |
| **1.9 TDi** | D | 1896 | ATD | | 06/01 ▸ | 1J0820413N | **817244** | 548 361 | AL |

## PASSAT (96>2000)

| | | | | | | | | | |
|---|---|---|---|---|---|---|---|---|---|
| **1.6 i** | E | 1595 | AHL, ADP, ANA, ARM | | 10/96 ▸ 09/00 | 8D0260403H | **816967** | 575 421 | AL |
| **1.8 i, 1.8 i 20V 1.8 i Turbo 20V** | E | 1781 | ADR, AEB, AFY, ANB APT, APU, ARG | | 10/96 ▸ 09/00 | 8D0260403H | **816967** | 575 421 | AL |
| **2.0 i** | E | 2000 | AUZ, ASU, AVA | | 01/00 ▸ 08/00 | 8D0260403H | **816967** | 575 421 | AL |
| **2.3 i VR5 20V** | E | 2324 | AGZ | | 10/96 ▸ 09/00 | 8D0260403H | **816967** | 575 421 | AL |
| **2.8 i V6, 2.8 i V6 30V** | E | 2771 | ATX, ACK, AGE, ALG APR | | 01/97 ▸ 09/00 | 8D0260403H | **816967** | 575 421 | AL |
| **1.9 TDi** | D | 1896 | AHU, AFN, AHH, AJM AVG | | 10/96 ▸ 09/00 | 8D0260403H | **816967** | 575 421 | AL |
| **1.9 TDi** | D | 1896 | AJM, ATJ, AVG | | 01/99 ▸ 09/00 | 8D0260403G | **817840** | 578 421 | AL |
| **2.5 TDi V6** | D | 2496 | AFB, AKN | | 08/98 ▸ 09/00 | 8D0260403G | **817840** | 578 421 | AL |

## PASSAT (2000>2005)

| | | | | | | | | | |
|---|---|---|---|---|---|---|---|---|---|
| **1.6 i** | E | 1595 | ALZ | | 10/00 ▸ 05/05 | 3B0260401 | **817679** | 618 421 | AL |
| **1.8 i Turbo 20V** | E | 1781 | AWM, AWT | | 10/00 ▸ 05/05 | 3B0260401 | **817679** | 618 421 | AL |
| **2.0 i, 2.0 i 20V** | E | 1984 | ALT, AZM | | 10/00 ▸ 05/05 | 3B0260401 | **817679** | 618 421 | AL |
| **2.3 i, 2.3 i V5** | E | 2324 | AZX | | 01/01 ▸ 05/05 | 3B0260401 | **817679** | 618 421 | AL |
| **2.8 i, 2.8 i V6** | E | 2771 | AMX, ATQ | | 10/00 ▸ 05/05 | 3B0260401 | **817679** | 618 421 | AL |
| **2.8 i, 2.8 i V6** | E | 2784 | BBG | | 10/00 ▸ 05/05 | 3B0260401 | **817679** | 618 421 | AL |
| **1.9 TDi** | D | 1896 | AVB, AVF, AWX | | 10/00 ▸ 05/05 | 3B0260401 | **817679** | 618 421 | AL |
| **2.0 TDi** | D | 1968 | BGW | | 11/03 ▸ 05/05 | 3B0260401 | **817679** | 618 421 | AL |
| **2.5 TDi, 2.5 TDi V6** | D | 2496 | AKN, BAU, BDG, BDH | | 10/00 ▸ 05/05 | 3B0260401 | **817679** | 618 421 | AL |

## PASSAT (2005>2010)

| | | | | | | | | | |
|---|---|---|---|---|---|---|---|---|---|
| **1.4 TSI CNG 150 16V** | F | 1390 | CDGA | N | 11/08 ▸ 07/10 | 3C0820411C | **814002** | 614 441 | AL |
| **1.6 i** | E | 1595 | BSE,BSF | N | 05/05 ▸ 11/10 | 3C0820411C | **814002** | 614 441 | AL |
| **1.6 FSi 16V** | E | 1598 | BLF | N | 03/05 ▸ 06/08 | 3C0820411C | **814002** | 614 441 | AL |
| **2.0 FSi 16V** | E | 1984 | BLR,BLX,BLY,BVX,BVY BVZ | N | 03/05 ▸ 11/10 | 3C0820411C | **814002** | 614 441 | AL |
| **2.0 TDi,2.0 TDi 16V** | D | 1968 | BKP,BMA,BMP,BMR,BUZ BVD,BVE,BWV,CBAA/F CBAB/F,CBAC/F,CBBB/F CBDC/F | N | 03/05 ▸ | 3C0820411C | **814002** | 614 441 | AL |
| **1.9 TDi** | D | 1896 | BKC,BLS,BLS/F,BXE | N | 03/05 ▸ 11/08 | 3C0820411C | **814002** | 614 441 | AL |

## PASSAT CC

| | | | | | | | | | |
|---|---|---|---|---|---|---|---|---|---|
| **2.0 TDI,2.0 TDI 16V** | D | 1968 | CBAA/F,CBAB/F,CBBB/F | N | 05/08 ▸ 11/10 | 3C0820411C | **814002** | 614 441 | AL |

## POLO (94>99)

| | | | | | | | | | |
|---|---|---|---|---|---|---|---|---|---|
| **1.0 i** | E | 999 | AER, ALL | | 07/96 ▸ 12/99 | 6K0820413B | **816908** | 550 350 | AL |
| **1.0 i** | E | 1043 | AEV | | 10/94 ▸ 06/96 | 6K0820413B | **816908** | 550 350 | AL |

Condenser Condenseur Kondensator Condensatore Condensor Condensador КОНДЕНСЕР Kondenser Kondenzátor Condensator Συμπυκνωτής



• **New** Nouveau **Nuevo** Novo **Nuovo** Nieuw **Neu** Nowość **Yeni** Новый Νέο **Novy**

# VOLKSWAGEN (.../...)

| | | CC | | | | OE | Valeo | DIM | TECH |
|---|---|---|---|---|---|---|---|---|---|
| **POLO (94>99) (.../...)** | | | | | | | | | |
| **1.3 i** | E | 1296 | ADX | | 10/94 ▸ 04/97 | 6K0820413B | **816908** | 550 350 | AL |
| **1.4 i, 1.4 i 16V** | E | 1390 | AEX, AFH, AKV, ANX APQ | | 07/95 ▸ 12/99 | 6K0820413B | **816908** | 550 350 | AL |
| **1.6 i** | E | 1595 | 1F | | 05/96 ▸ 09/97 | 6K0820413B | **816908** | 550 350 | AL |
| **1.6 i, 1.6 i 16V** | E | 1598 | AEA/E, AFT, AHS, AJV ALM | | 10/94 ▸ 12/99 | 6K0820413B | **816908** | 550 350 | AL |
| **1.8 i** | E | 1781 | ADD | | 03/98 ▸ 08/99 | 6K0820413B | **816908** | 550 350 | AL |
| **2.0 i** | E | 1984 | ADC | | 05/96 ▸ 08/99 | 6K0820413B | **816908** | 550 350 | AL |
| **1.7 SDI** | D | 1716 | AHG, AKU, AKW | | 04/97 ▸ 12/99 | 6K0820413B | **816908** | 550 350 | AL |
| **1.9 D, 1.9 SDI, 1.9 TDi** | D | 1896 | 1Y, AEF, AEY, AFN AGD, AHU, ALE | | 10/94 ▸ 12/99 | 6K0820413B | **816908** | 550 350 | AL |
| **POLO (99>2001)** | | | | | | | | | |
| **1.0 i** | E | 999 | ALD, AUC | | 10/99 ▸ 09/01 | 6X0820413A | **817247** | 350 358 | AL |
| **1.4 i, 1.4 i 16V** | E | 1390 | AFK, AHW, AKK, AKP AUA, AUB, AUD | | 10/99 ▸ 09/01 | 6X0820413A | **817247** | 350 358 | AL |
| **1.4 i, 1.4 i 16V** | E | 1390 | AKK, ANW, APE, AUA AUD | | 10/99 ▸ 09/01 | 6K0820413B | **816908** | 550 350 | AL |
| **1.6 i** | E | 1595 | AKL, AEH, APF | | 10/99 ▸ 09/01 | 6K0820413B | **816908** | 550 350 | AL |
| **1.6 i, 1.6 i 16V** | E | 1598 | ALM, AUR | | 10/99 ▸ 09/01 | 6K0820413B | **816908** | 550 350 | AL |
| **1.6 i 16V** | E | 1598 | ARC, AVY | | 11/99 ▸ 09/01 | 6X0820413A | **817247** | 350 358 | AL |
| **1.8 i** | E | 1781 | ADD | | 03/00 ▸ 09/01 | 6K0820413B | **816908** | 550 350 | AL |
| **2.0 i** | E | 1984 | ADC | | 06/00 ▸ 09/01 | 6K0820413B | **816908** | 550 350 | AL |
| **1.4 TDi** | D | 1422 | AMF | | 10/99 ▸ 09/01 | 6X0820413 | **817246** | 390 369 | AL |
| **1.7 SDi** | D | 1716 | AKU | | 10/99 ▸ 04/00 | 6K0820413B | **816908** | 550 350 | AL |
| **1.9 D, 1.9 SDi, 1.9 TDi** | D | 1896 | AEF, AGD, AGP, AGR ALH, AQM, ASV | | 10/99 ▸ 09/01 | 6K0820413B | **816908** | 550 350 | AL |
| **POLO (2001>2004)** | | | | | | | | | |
| **1.2 i 12V** | E | 1198 | AWY,BMD,BME, AZQ | R134 | 11/01 ▸ 07/04 | 6Q0820411K | **817686** | 468 361 | AL |
| **1.4 16V, 1.4 FSI 16V, 1.4 i 16V** | E | 1390 | AUA, AUB, AXU, BBY BBZ,BKY | R134 | 11/01 ▸ | 6Q0820411J | **817686** | 468 361 | AL |
| **1.4 TDi** | D | 1422 | AMF, BAY | R134 | 11/01 ▸ | 6Q0820411J | **817686** | 468 361 | AL |
| **1.9 SDi, 1.9 TDi** | D | 1896 | ASZ, ASY, ATD, AXR | R134 | 11/01 ▸ | 6Q0820411J | **817686** | 468 361 | AL |
| **POLO (2005>)** | | | | | | | | | |
| **1.2 i, 1.2 i 12V** | E | 1198 | BME, BMD | R134 | 04/05 ▸ | 6Q0820411K | **817686** | 468 361 | AL |
| **1.4 FSi 16V, 1.4 i 16V** | E | 1390 | AXU, BBZ, BKY | R134 | 04/05 ▸ | 6Q0820411K | **817686** | 468 361 | AL |
| **1.8 GTI Turbo 20V** | E | 1781 | BJX | R134 | 04/05 ▸ | 6Q0820411K | **817686** | 468 361 | AL |
| **1.4 TDi** | D | 1422 | BNM, BMS, BNV | R134 | 04/05 ▸ | 6Q0820411K | **817686** | 468 361 | AL |
| **1.9 SDi, 1.9 TDi, 1.9 TDi 16V** | D | 1896 | ATD, ASY, ASZ, AXR BLT | R134 | 04/05 ▸ | 6Q0820411K | **817686** | 468 361 | AL |
| **SHARAN (95>2000)** | | | | | | | | | |
| **1.8 i Turbo 20V** | E | 1781 | AJH | | 11/97 ▸ 02/00 | 7M0820413F | **816948** | 544 366 | AL |
| **2.0 i, 2.0 i 16V** | E | 1984 | ABF, ADY | | 09/95 ▸ 02/00 | 7M0820413F | **816948** | 544 366 | AL |
| **2.8 i VR6** | E | 2792 | AAA, AMY | | 09/95 ▸ 02/00 | 7M0820413F | **816948** | 544 366 | AL |
| **1.9 TDi** | D | 1896 | 1Z, AFN, AHU, ANU AVG | | 09/95 ▸ 02/00 | 7M0820413F | **816948** | 544 366 | AL |
| **SHARAN (2000>2003)** | | | | | | | | | |
| **1.8 i Turbo** 7M-2-025 001 ▸ | E | 1781 | AWC | R134 | 04/00 ▸ 05/03 | 7M3820411A | **818004** | 554 361 | AL |
| **2.0 i** ▸ 7M-2-025 000 | E | 1984 | ATM | R134 | 04/00 ▸ 05/03 | 7M3820411A | **818004** | 554 361 | AL |
| **2.8 i V6, 2.8 i VR6** ▸ 7M-2-025 000 | E | 2792 | AYL | R134 | 04/00 ▸ 05/03 | 7M3820411D | **818004** | 554 361 | AL |
| **1.9 TDi** ▸ 7M-2-025 000 | D | 1896 | ANU, ASZ, AUY | R134 | 04/00 ▸ 05/03 | 7M3820411A | **818004** | 554 361 | AL |
| **SHARAN (2003>)** | | | | | | | | | |
| **1.8 i Turbo 20V** ▸ 7M-4-024 000 | E | 1781 | AWC | R134 | 06/03 ▸ 10/03 | 7M3820411D | **818004** | 554 361 | AL |
| **2.0 i** ▸ 7M-4-024 000 | E | 1984 | ATM | R134 | 06/03 ▸ 10/03 | 7M3820411D | **818004** | 554 361 | AL |
| **2.8 i VR6** ▸ 7M-4-019 698 | E | 2792 | AYL | R134 | 06/03 ▸ 10/03 | 7M3820411D | **818004** | 554 361 | AL |
| **1.9 TDi** ▸ 7M-4-024 000 | D | 1896 | AUY, ANU, ASZ | R134 | 06/03 ▸ 10/03 | 7M3820411D | **818004** | 554 361 | AL |

# VOLKSWAGEN (.../...)

## TOURAN (2003>2006)

| | | CC | | | | OE | Valeo | DIM | TECH |
|---|---|---|---|---|---|---|---|---|---|
| **1.4 TSi 16V** | E | 1390 | BMY | R134 | 02/06 ▸ 11/06 | 1T0820411E | **817806** | 538 441 | AL |
| **1.6 i** 1T-4-009 001 ▸ | E | 1595 | BGU, BSE, BSF | R134 | 07/03 ▸ | 1T0820411E | **817806** | 538 441 | AL |
| **1.6 FSI 16V** ▸ 1T-4-009 000 | E | 1598 | BAG, BLF, BLP | R134 | 02/03 ▸ 06/03 | 1T0820411E | **817806** | 538 441 | AL |
| **2.0 FSi 16V** | E | 1984 | BLY, AXW, BLR, BLX | R134 | 10/03 ▸ | 1T0820411E | **817806** | 538 441 | AL |
| **1.9 TDI** ▸ 1T-4-009 000 | D | 1896 | AVQ, BKC | R134 | 02/03 ▸ 06/03 | 1T0820411E | **817806** | 538 441 | AL |
| **2.0 TDI 16V** 1T-4-009 001 ▸ | D | 1968 | AZV, BKD, BMN | R134 | 02/03 ▸ | 1T0820411E | **817806** | 538 441 | AL |

## TOURAN (2006>)

| | | | | | | | | | |
|---|---|---|---|---|---|---|---|---|---|
| **1.4 TSi** | E | 1390 | BLG, BMY | R134 | 11/06 ▸ | 1T0820411E | **817806** | 538 441 | AL |
| **1.6 i, 1.6 Fsi** | E | 1598 | BSE, BSF, BLF | R134 | 11/06 ▸ | 1T0820411E | **817806** | 538 441 | AL |
| **2.0 i, 2.0 Fsi** | E | 1984 | BVY, BSX, BVZ | R134 | 11/06 ▸ | 1T0820411E | **817806** | 538 441 | AL |
| **1.9 TDi** | D | 1896 | BLS, BXE, BXF, BXJ | R134 | 11/06 ▸ | 1T0820411E | **817806** | 538 441 | AL |
| **2.0 TDi** | D | 1968 | AZV, BKD, BMN | R134 | 11/06 ▸ | 1T0820411E | **817806** | 538 441 | AL |

## VENTO

| | | | | | | | | | |
|---|---|---|---|---|---|---|---|---|---|
| **1.4 i** | E | 1391 | ABD | | 11/91 ▸ 07/95 | 1H0820413 | **816910** | 548 361 | AL |
| **1.4 i** | E | 1391 | AEX | | 07/95 ▸ 12/97 | 1H0820413 | **816910** | 548 361 | AL |
| **1.6 i** | E | 1598 | ABU, AEA/E/K, AFT AKS | | 07/92 ▸ 12/97 | 1H0820413 | **816910** | 548 361 | AL |
| **1.8 i** | E | 1781 | ADZ, AAM, ABS | | 11/91 ▸ 12/97 | 1H0820413 | **816910** | 548 361 | AL |
| **2.0 E** | E | 1984 | AGG, 2E, ADY, AEP AKR | | 11/91 ▸ 12/97 | 1H0820413 | **816910** | 548 361 | AL |
| **2.8 i, 2.8 i VR6** | E | 2792 | AAA | | 01/92 ▸ 12/97 | 1H0820413 | **816910** | 548 361 | AL |
| **1.9 D, 1.9 SDi, 1.9 TD, 1.9 TDi** | D | 1896 | 1Y, 1Z, AAZ, AEY AFN, AHU, ALE | | 11/91 ▸ 12/97 | 1H0820413 | **816910** | 548 361 | AL |

# VOLKSWAGEN

## CADDY (95>2004)

| | | | | | | | | | |
|---|---|---|---|---|---|---|---|---|---|
| **1.4 i, 1.4 i 16V** ▸ 9KTR504050 | E | 1390 | AEX, AKV, APQ, AUA AUD | | 11/95 ▸ | 6K0820413B | **816908** | 550 350 | AL |
| **1.6 i** 9KTR504051 ▸ | E | 1595 | 1F | | 11/95 ▸ | 6K0820413B | **816908** | 550 350 | AL |
| **1.6 i** | E | 1598 | AEE | | 06/96 ▸ 12/00 | 6K0820413B | **816908** | 550 350 | AL |
| **1.7 SDi** | D | 1716 | AHB | | 07/96 ▸ 09/00 | 6K0820413B | **816908** | 550 350 | AL |
| **1.9 D, 1.9 SDi, 1.9 TDi** | D | 1896 | AHU, 1Y, 1Z, AEF AEY, ALE, ALH, AYQ | | 11/95 ▸ | 6K0820413B | **816908** | 550 350 | AL |

## CADDY (2004>)

| | | | | | | | | | |
|---|---|---|---|---|---|---|---|---|---|
| **1.4 i 16V** | E | 1390 | BCA | R134 | 02/04 ▸ | 1T0820411B | **817806** | 538 441 | AL |
| **1.6 i** | E | 1595 | BSE,BGU,BSF | R134 | 02/04 ▸ | 1T0820411B | **817806** | 538 441 | AL |
| **1.9 TDi** | D | 1896 | BLS,BSU, BJB | R134 | 02/04 ▸ | 1T0820411B | **817806** | 538 441 | AL |
| **2.0 SDi** | D | 1968 | BST,BDJ | R134 | 02/04 ▸ | 1T0820411B | **817806** | 538 441 | AL |

## CRAFTER

| | | | | | | | | | |
|---|---|---|---|---|---|---|---|---|---|
| **2.5 TDi** | D | 2500 | BJJ, BJK, BJL, BJM | R134 | 04/06 ▸ | 2E0820413 | **818173** | 679 461 | AL |

## LT II (96>2003)

| | | | | | | | | | |
|---|---|---|---|---|---|---|---|---|---|
| **2.5 SDi, 2.5 TDI** | D | 2460 | APA, AGX, AHD, ANJ | | 05/96 ▸ 05/03 | 2D0820413C | **816996** | 610 376 | AL |
| **2.5 TD, 2.5 TDI** | D | 2461 | AVR, BBE, BBF | | 09/00 ▸ 05/03 | 2D0820413C | **816996** | 610 376 | AL |
| **2.8 TD** | D | 2798 | ATA, AGK | | 05/96 ▸ 01/02 | 2D0820413C | **816996** | 610 376 | AL |
| **2.8 TD, 2.8 TDI** | D | 2799 | BCQ, AUH | | 02/02 ▸ 05/03 | 2D0820413C | **816996** | 610 376 | AL |

## LT III (2003>)

| | | | | | | | | | |
|---|---|---|---|---|---|---|---|---|---|
| **2.5 TDi** | D | 2460 | ANJ | | 06/03 ▸ | 2D0820413C | **816996** | 610 376 | AL |
| **2.5 TDi** | D | 2461 | BBF, AVR, BBE | | 06/03 ▸ | 2D0820413C | **816996** | 610 376 | AL |
| **2.8 TDi** | D | 2799 | BCQ, AUH | | 06/03 ▸ | 2D0820413C | **816996** | 610 376 | AL |

# VOLVO

## 850

| | | | | | | | | | |
|---|---|---|---|---|---|---|---|---|---|
| **2.0 10V, 2.0 20V, 2.0 Turbo 20V** | E | 1984 | B5202F, B5204F B5204T | | 07/93 ▸ 12/96 | 9171271 | **817675** | 578 391 | AL |
| **2.3 20V, 2.3 Turbo 20V** | E | 2318 | B5234S, B5234T B5234T5 | | 03/93 ▸ 12/96 | 9171271 | **817675** | 578 391 | AL |

Condenser Condenseur Kondensator Condensatore Condensor Condensador КОНДЕНСЕР Kondenser Kondenzátor Condensator Συμπυκνωτής



• **New** Nouveau **Nuevo** Novo **Nuovo** Nieuw **Neu** Nowość **Yeni** Новый Νέο **Novy**

| | | CC | | | | OE | Valeo | DIM | TECH |
|---|---|---|---|---|---|---|---|---|---|
| **VOLVO (.../...)** | | | | | | | | | |
| **850 (.../...)** | | | | | | | | | |
| **2.5 10V, 2.5 20V, 2.5 i Turbo** | E | 2435 | B5254F, B5252F<br>B5254T | | 07/93 ▸ 12/96 | 9171271 | **817675** | 578 391 | AL |
| **2.5 TDi** | D | 2461 | D5252T | | 02/96 ▸ 12/96 | 9171271 | **817675** | 578 391 | AL |
| **S40** | | | | | | | | | |
| **1.6 i 16V** | E | 1588 | B4164S2, B4164S<br>B4164S-D3 | | 01/97 ▸ 03/04 | 30871579 | **817559** | 608 351 | AL |
| **1.8 i 16V Auto** | E | 1731 | B4184S-D3, B4184S | | 10/95 ▸ 08/99 | 30897260 | **817560** | 608 351 | AL |
| **1.8 i 16V** | E | 1731 | B4184S, B4184S-D3 | | 10/95 ▸ 08/99 | 30871579 | **817559** | 608 351 | AL |
| **1.8 i 16V Auto** | E | 1783 | B4184S2 | | 04/99 ▸ 03/04 | 30897260 | **817560** | 608 351 | AL |
| **1.8 i 16V** | E | 1783 | B4184S2, B4184S3 | | 04/99 ▸ 03/04 | 30871579 | **817559** | 608 351 | AL |
| **1.8 i 16V Auto** | E | 1834 | B4184SM | | 03/98 ▸ 03/04 | 30897260 | **817560** | 608 351 | AL |
| **1.8 i 16V** | E | 1834 | B4184SM | | 03/98 ▸ 03/04 | 30871579 | **817559** | 608 351 | AL |
| **1.9 i Turbo 16V, 2.0 i 16V**<br>**2.0 i Turbo 16V Auto** | E | 1948 | B4204T, B4194T<br>B4204S, B4204S2 | | 10/95 ▸ 03/04 | 30897260 | **817560** | 608 351 | AL |
| **2.0 i 16V** | E | 1948 | B4204S, B4204S2 | | 10/95 ▸ 03/04 | 30871579 | **817559** | 608 351 | AL |
| **1.9 TD, 1.9 Tdi Auto** | D | 1870 | D4192T, D4192T2 | | 07/96 ▸ 07/00 | 30897260 | **817560** | 608 351 | AL |
| **V40** | | | | | | | | | |
| **1.6 i 16V** | E | 1588 | B4164S, B4164S2<br>B4164S-D3 | | 05/97 ▸ | 30871579 | **817559** | 608 351 | AL |
| **1.8 i 16V Auto** | E | 1731 | B4184S, B4184S-D3 | | 10/95 ▸ 08/99 | 30897260 | **817560** | 608 351 | AL |
| **1.8 i 16V** | E | 1731 | B4184S-D3, B4184S | | 10/95 ▸ 08/99 | 30871579 | **817559** | 608 351 | AL |
| **1.8 i 16V Auto** | E | 1783 | B4184S2 | | 04/99 ▸ | 30897260 | **817560** | 608 351 | AL |
| **1.8 i 16V** | E | 1783 | B4184S3, B4184S2 | | 04/99 ▸ | 30871579 | **817559** | 608 351 | AL |
| **1.8 i 16V Auto** | E | 1834 | B4184SM | | 03/98 ▸ | 30897260 | **817560** | 608 351 | AL |
| **1.8 i 16V** | E | 1834 | B4184SM | | 03/98 ▸ | 30871579 | **817559** | 608 351 | AL |
| **1.9 T 16V Auto** | E | 1855 | B4194T2 | | 05/97 ▸ 07/00 | 30897260 | **817560** | 608 351 | AL |
| **2.0 i 16V** | E | 1948 | B4204S, B4204S2 | | 10/95 ▸ | 30871579 | **817559** | 608 351 | AL |
| **2.0 T Turbo 16V, 2.0 i 16V Auto** | E | 1948 | B4204S, B4204S2<br>B4204T | | 10/95 ▸ | 30897260 | **817560** | 608 351 | AL |
| **1.9 Tdi Auto** | D | 1870 | D4192T2 | | 01/99 ▸ | 30897260 | **817560** | 608 351 | AL |
| **1.9 TD** | D | 1870 | D4192T | | 06/96 ▸ 08/99 | 30871579 | **817559** | 608 351 | AL |
| **C70** | | | | | | | | | |
| **2.3 i Turbo 20V** | E | 2316 | B5234T3-240 | | 03/97 ▸ 06/02 | 9171271 | **817675** | 578 391 | AL |
| **2.4 i Turbo** | C | 2435 | B5254T | | 03/97 ▸ 09/02 | 9171271 | **817675** | 578 391 | AL |
| **S70** | | | | | | | | | |
| **2.0 i, 2.0 i 10V, 2.0 i Turbo** | E | 1984 | B5202FS, B5204T2<br>B5204T3, B5204T4 | | 12/96 ▸ 11/00 | 9171271 | **817675** | 578 391 | AL |
| **2.3 i, 2.3 i Turbo** | E | 2318 | B5234FS, B5234T2<br>B5234T3, B5234T4 | | 12/96 ▸ 11/00 | 9171271 | **817675** | 578 391 | AL |
| **2.3 i Turbo** | E | 2319 | B5234T7-E6 | | 05/97 ▸ 11/00 | 9171271 | **817675** | 578 391 | AL |
| **2.4 i 20V, 2.4 i Turbo 20V**<br>**2.5 i 10V, 2.5 i 20V**<br>**2.5 i Turbo 20V** | E | 2435 | B5244S, B5244S2<br>B5244T, B5252FS<br>B5254FS, B5254S<br>B5254T | | 12/96 ▸ 11/00 | 9171271 | **817675** | 578 391 | AL |
| **2.5 TDi** | D | 2461 | D5252T | | 12/96 ▸ 11/00 | 9171271 | **817675** | 578 391 | AL |
| **V70 (96>2000)** | | | | | | | | | |
| **2.0 i 10V, 2.0 i Turbo 20V** | E | 1984 | B5204T3, B5202FS<br>B5204T2, B5204T4 | | 05/97 ▸ 06/98 | 9171271 | **817675** | 578 391 | AL |
| **2.3 i 20V, 2.3 i Turbo 20V** | E | 2318 | B5234FS, B5234T2/3<br>B5234T4, B5234T6 | | 05/97 ▸ 06/98 | 9171271 | **817675** | 578 391 | AL |
| **2.3 i Turbo 20V** | E | 2319 | B5234T7-E6 | | 05/97 ▸ 06/98 | 9171271 | **817675** | 578 391 | AL |
| **2.4 i 20V/Turbo, 2.5 i 10V**<br>**2.5 i 20V/Turbo** | E | 2435 | B5252FS, B5244S/2<br>B5244T, B5254FS<br>B5254T | | 12/96 ▸ 12/99 | 9171271 | **817675** | 578 391 | AL |
| **2.5 TDi 10V** | D | 2461 | D5252T | | 05/97 ▸ 06/98 | 9171271 | **817675** | 578 391 | AL |
| **VOLVO TRUCKS** | | | | | | | | | |
| **FH12-SERIES** | | | | | | | | | |
| **FH 12/340** | D | 12100 | D12A340, D12C340<br>D12D340 | | 08/98 ▸ | 3980841 | **818987** | 794 338 | AL |
| **FH 12/380** | D | 12100 | D12A380, D12C380<br>D12D380 | | 08/93 ▸ | 3980841 | **818987** | 794 338 | AL |

| | | CC | | | | OE | Valeo | DIM | TECH |
|---|---|---|---|---|---|---|---|---|---|
| **VOLVO TRUCKS** (.../...) | | | | | | | | | |
| **FH12-SERIES** (.../...) | | | | | | | | | |
| **FH 12/420** | D | 12100 | D12A420, D12C420 D12D420 | | 08/93 ▸ | 3980841 | **818987** | 794 338 | AL |
| **FH 12/460** | D | 12100 | D12C460, D12D460 | | 08/98 ▸ | 3980841 | **818987** | 794 338 | AL |
| **FH 12/500** | D | 12100 | D12D500 | | 08/98 ▸ | 3980841 | **818987** | 794 338 | AL |
| **FH16-SERIES** | | | | | | | | | |
| **FH 16/470** | D | 16120 | D16A470 | | 08/93 ▸ 12/99 | 3980841 | **818987** | 794 338 | AL |
| **FH 16/520** | D | 16120 | D16A520, D16B520 | | 08/93 ▸ 12/02 | 3980841 | **818987** | 794 338 | AL |
| **FH 16/610** | D | 16120 | D16C610 | | 01/03 ▸ | 3980841 | **818987** | 794 338 | AL |
| **FL** | | | | | | | | | |
| **6 15** | D | 5500 | TD63E, ES, D | | | 8157212 | **818039** | 365 534 | |
| **6 15** | D | 5500 | TD63ES | | | 8157212 | **818039** | 365 534 | |
| **6 18** | D | 5500 | TD63E | | 11/91 ▸ | 8157212 | **818039** | 365 534 | |
| **6 H** | D | 5500 | TD61F, FB | | | 8157212 | **818039** | 365 534 | |
| **6 L** | D | 5500 | TD61G, GS, G | | | 8157212 | **818039** | 365 534 | |
| **6 M** | D | 5500 | TD61GS, GE | | | 8157212 | **818039** | 365 534 | |
| **FL 6** | D | | D6A, TD63E, ES | | | 8157212 | **818039** | 365 534 | |
| **FM-SERIES** | | | | | | | | | |
| **FM 7/250** | D | 7300 | D7C250 | | 08/98 ▸ 12/01 | 3981637 | **818984** | 639 328 | AL |
| **FM 7/290** | D | 7300 | D7C290 | | 08/98 ▸ 12/01 | 3981637 | **818984** | 639 328 | AL |
| **FM 9/260** | D | 9364 | D9A260 | | 12/01 ▸ 09/05 | 3981637 | **818984** | 639 328 | AL |
| **FM 9/300** | D | 9364 | D9A300 | | 12/01 ▸ 09/05 | 3981637 | **818984** | 639 328 | AL |
| **FM 9/340** | D | 9364 | D9A340 | | 12/01 ▸ 09/05 | 3981637 | **818984** | 639 328 | AL |
| **FM 9/380** | D | 9364 | D9A380 | | 12/01 ▸ 09/05 | 3981637 | **818984** | 639 328 | AL |
| **FM 10/320** | D | 9600 | D10B320 | | 04/99 ▸ 12/01 | 3981637 | **818984** | 639 328 | AL |
| **FM 10/360** | D | 9600 | D10B360 | | 04/99 ▸ 12/01 | 3981637 | **818984** | 639 328 | AL |
| **FM 12/340** | D | 12100 | D12C340, D12D340 | | 08/98 ▸ 09/05 | 3981637 | **818984** | 639 328 | AL |
| **FM 12/380** | D | 12100 | D12C380, D12D380 | | 08/98 ▸ 09/05 | 3981637 | **818984** | 639 328 | AL |
| **FM 12/420** | D | 12100 | D12C420, D12D420 | | 08/98 ▸ 09/05 | 3981637 | **818984** | 639 328 | AL |
| **FS** | | | | | | | | | |
| **FS 718** | D | 6700 | D7B230, D7B260 | | 09/94 ▸ 03/96 | 8157212 | **818039** | 365 534 | |

Condenser Condenseur Kondensator Condensatore Condensor Condensador КОНДЕНСЕР Kondenser Kondenzátor Condensator Συμπυκνωτής



• **New** Nouveau **Nuevo** Novo **Nuovo** Nieuw **Neu** Nowość **Yeni** Новый Νέο **Novy**

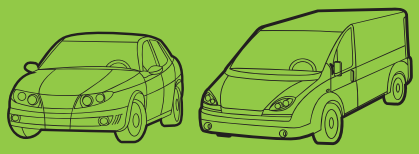

Valeo

Pour / For

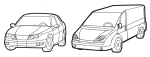

| | |
|---|---|
| ALFA ROMEO | 406 |
| AUDI | 407 |
| BMW | 408 |
| CHRYSLER | 413 |
| CITROEN | 414 |
| DAEWOO | 415 |
| FIAT | 415 |
| FORD | 422 |
| LANCIA | 425 |
| MERCEDES | 426 |
| MINI | 431 |
| OPEL | 432 |
| PEUGEOT | 434 |
| RENAULT | 436 |
| SAAB | 436 |
| SEAT | 437 |
| SKODA | 438 |
| VAUXHALL | 438 |
| VOLKSWAGEN | 439 |

| | |
|---|---|
| AUDI | 441 |
| BMW | 454 |
| CITROEN | 456 |
| FIAT | 462 |
| FORD | 463 |
| LANCIA | 463 |
| MERCEDES | 463 |
| OPEL | 464 |
| PEUGEOT | 470 |
| RENAULT | 480 |
| SAAB | 489 |
| SEAT | 489 |
| SKODA | 502 |
| TOYOTA | 508 |
| VAUXHALL | 508 |
| VOLKSWAGEN | 512 |
| VOLVO | 542 |

| | |
|---|---|
| CITROEN | 544 |
| PEUGEOT | 545 |
| RENAULT | 548 |
| ROVER | 555 |

Fan System
Groupe moto-ventilateur
Lüftersystem
Gruppo Motoventilatore
Fan-systeem
Fan sistemi
Grupo motorventilador
Модуль вентилятора
ventilátor rendszer
Modul sahary
Modul ventilator
Σύστημα ανεμιστήρα

Fan Motor + Blades
Moteur + hélice
Lüftermotor + Lüfterrad
Motorino + Ventola
Ventilatormotor
Fan motoru + Kanatlar
Moto-ventilador + Aspas
Мотор вентилятора + лопасти вентилятора
Ventilátor motor és lapát
Motor sahary + vrtule
Ventilator motor + Lame
Μοτέρ ανεμιστήρων + Πτερωτές

Fan Motor
Moteur de ventilateur
Lüftermotor
Motoventole
Ventilatormotor
Fan motoru
Motor del ventilador
Мотор вентилятора
Ventilátor motor
Motor sahary
Ventilator motor
Μοτέρ ανεμιστήρων

# ALFA ROMEO

| | | | CC | | AC | | | | OE | Valeo | |
|---|---|---|---|---|---|---|---|---|---|---|---|
| **145** | | | | | | | | | | | |
| 1.4 i Twin Spark 16V | 930A3 | E | 1370 | AR33503 | M | - | | C | 12/96 ▸ 06/01 | 60571069 | |
| 1.6 i Twin Spark 16V | 930A2 | E | 1598 | AR32102,AR67601 | M | - | | C | 12/96 ▸ 06/01 | 60571069 | |
| 1.8 i Twin Spark 16V<br>1.8 i Twin Spark AGV 16V | 930A1 | E | 1747 | AR32201,AR67106 | M | - | | C | 12/96 ▸ 06/01 | 60571069 | |
| 2.0 i 16V,2.0 i AGV 16V | 930A5 | E | 1970 | AR32301,AR67204,AR67299 | M | - | | C | 07/96 ▸ 06/01 | 60571069 | |
| 1.9 TD | 930A4 | D | 1929 | AR33601,AR67501 | M | + | | C | 09/94 ▸ 06/98 | 60809409 | |
| **146** | | | | | | | | | | | |
| 1.4 i Twin Spark 16V | 930B3 | E | 1370 | AR33503 | M | - | | | 02/98 ▸ 06/01 | 60571069 | |
| 1.6 i Twin Spark 16V | 930B2 | E | 1598 | AR67601 | M | - | | | 12/96 ▸ 06/01 | 60571069 | |
| 1.8 i Twin Spark 16V<br>1.8 i Twin Spark AGV 16V | 930B1 | E | 1747 | AR32201,AR67106 | M | - | | | 12/96 ▸ 06/01 | 60571069 | |
| 2.0 i 16V<br>2.0 i Twin Spark AGV 16V | 930B5 | E | 1970 | AR32301,AR67204 | M | - | | | 06/96 ▸ 06/01 | 60571069 | |
| 1.9 TDs | 930B4 | D | 1929 | AR33601,AR67501 | M | + | | | 12/94 ▸ 06/98 | 60809409 | |
| **147 (2000>2004)** | | | | | | | | | | | |
| 1.6 i Twin Spark 16V | 937/AX/BX | E | 1598 | AR32104,AR37203 | M | +/- | | | 10/00 ▸ 09/04 | 51702461 | **696108** |
| 1.6 i Twin Spark 16V | 937BX | E | 1598 | AR32104,AR37203 | M | +/- | | | 03/01 ▸ | 46743391 | **696108** |
| 1.6 i Twin Spark 16V | 937/AX/BX | E | 1598 | AR32104,AR37203 | M | | | C | 10/00 ▸ | 46743391 | **696108** |
| 2.0 i Twin Spark 16V | 937/AX/BX | E | 1970 | AR32310 | M | +/- | | C | 10/00 ▸ 09/04 | 46743390 | **696108** |
| 3.2 i V6 24V | 937AX | E | 3179 | 932A.000 | M | +/- | | | 02/03 ▸ 09/04 | 60692693 | **696111** |
| 1.9 JTD,1.9 JTD 16V | 937/AX/BX | D | 1910 | 192B1.000,937A2.000 | M | +/- | | | 10/00 ▸ 09/04 | 46842844 | |
| 1.9 JTD,1.9 JTD 16V | 937/AX/BX | D | 1910 | 192B1.000,937A2.000,937A4.000 | M | +/- | | C | 10/00 ▸ 09/04 | 46743392 | •**696109** |
| 1.9 JTD | 937/AX/BX | D | 1910 | 182B9.000 | M | +/- | | | 03/01 ▸ 09/04 | 46849782 | |
| 1.9 JTD,1.9 JTD 16V | 937/AX/BX | D | 1910 | 937A2.000,937A4.000 | M | +/- | | | 09/03 ▸ 09/04 | 60692703 | |
| 1.9 JTD | 937/AX/BX | D | 1910 | 182B9.000 | M | | | C | 03/01 ▸ 09/04 | 46743390 | **696108** |
| **147 (2004>)** | | | | | | | | | | | |
| 1.6 i Twin Spark 16V | 937/AX/BX | E | 1598 | AR32104,AR37203 | M | +/- | | | 10/04 ▸ 01/10 | 51702461 | **696108** |
| 2.0 i Twin Spark 16V | 937/AX/BX | E | 1970 | AR32310 | M | +/- | | | 10/04 ▸ 11/08 | 46743390 | **696108** |
| 1.9 JTD | 937/AX/BX | D | 1910 | 182B9.000 | M | +/- | | | 10/04 ▸ 09/05 | 46849782 | |
| 1.9 JTD,1.9 JTD 16V | 937/AX/BX | D | 1910 | 937A2.000,937A4.000,937A5.000 | M | +/- | | | 10/04 ▸ 01/10 | 46743392 | •**696109** |
| 1.9 JTD,1.9 JTD 16V<br>1.9 JTDM | 937/AX/BX | D | 1910 | 937A2.000,937A4.000,937A5.000<br>939A7.000 | M | +/- | | | 10/04 ▸ 01/10 | 60692703 | |
| **155** | | | | | | | | | | | |
| 1.6 i Twin Spark 16V | 167A6 | E | 1598 | AR67601 | M | - | | | 04/96 ▸ 08/97 | 60571069 | |
| 1.7 i Twin Spark 16V | 167A4 | E | 1747 | AR67106 | M | - | | | 04/96 ▸ 08/97 | 60571069 | |
| 1.7 i Twin Spark | 167A4 | E | 1749 | AR67103,AR67105 | M | - | | | 11/91 ▸ 08/97 | 60571069 | |
| 1.8 i Twin Spark | 167A4 | E | 1773 | AR67101,AR67102 | M | - | | | 11/91 ▸ 03/95 | 60571069 | |
| 2.0 i Twin Spark 16V | 167A2 | E | 1970 | AR67204,AR67299 | M | - | | | 03/95 ▸ 08/97 | 60571069 | |
| 2.0 i Turbo<br>2.0 i Twin Spark | 167A2 | E | 1995 | AR67201,AR67202,AR67203 | M | - | | | 11/91 ▸ 08/97 | 60571069 | |
| 1.9 TD | 167A3 | D | 1929 | AR33601,AR67501 | M | - | | | 07/93 ▸ 08/97 | 60571069 | |
| 1.9 TD | 167A3 | D | 1929 | AR33601,AR67501 | M | + | | | 07/93 ▸ 11/95 | 60809409 | |
| **156 (97>2003)** | | | | | | | | | | | |
| 1.6 i Twin Spark 16V | 932A4 | E | 1598 | AR32103 | M | + | | | 09/00 ▸ 03/03 | 60814437 | |
| 1.6 i Twin Spark 16V | 932/A4/B4 | E | 1598 | AR32102,AR32103,AR32104<br>AR67601 | M | - | | C | 09/97 ▸ 03/03 | 60628041 | |
| 1.8 i Twin Spark 16V | 932/A3/B3 | E | 1747 | AR32201,AR32205 | M | - | | C | 09/97 ▸ 03/03 | 60628041 | |
| 2.0 i Twin Spark 16V | 932/A2/B2 | E | 1970 | AR32301,AR32310 | M | - | | C | 09/97 ▸ 03/03 | 60628041 | |
| 2.5 i V6 24V | 932A1 | E | 2492 | AR32401 | M | +/- | | C | 09/97 ▸ 03/99 | 60624712 | |
| 2.5 i V6 24V | 932/A1/B1 | E | 2492 | AR32401,AR32405 | M | +/- | | C | 04/99 ▸ 03/03 | 60657849 | **696111** |
| 2.5 i V6 24V<br>D3228 ▸ | 932/A1/B1 | E | 2492 | AR32401,AR32405 | M | + | | | 03/99 ▸ 03/03 | 60692693 | **696111** |
| 2.5 i V6 24V | 932/A1/B1 | E | 2492 | AR32401,AR32405 | M | + | | | 03/99 ▸ | 60657849 | **696111** |
| 2.5 i V6 24V | 932A1 | E | 2492 | AR32401 | A | +/- | | C | 02/99 ▸ 03/99 | 60624712 | |
| 2.5 i V6 24V | 932/A1/B1 | E | 2492 | AR32401,AR32405 | A | +/- | | C | 04/99 ▸ 03/03 | 60657849 | **696111** |
| 2.5 i V6 24V | 932/A1/B1 | E | 2492 | AR32401,AR32405 | A | + | | | 03/99 ▸ 03/03 | 60692693 | **696111** |
| 2.5 i V6 24V | 932/A1/B1 | E | 2492 | AR32401,AR32405 | A | + | | | 03/99 ▸ | 60657849 | **696111** |
| 3.2 i V6 24V | 932/AX/BX | E | 3179 | 932A.000 | M | + | | | 02/02 ▸ | 60657849 | **696111** |
| 3.2 i V6 24V | 932/AX/BX | E | 3179 | 932A.000 | M | + | | | 02/02 ▸ 03/03 | 60692693 | **696111** |
| 1.9 JTD | 932A | D | 1910 | AR32302 | M | + | | C | 09/97 ▸ 12/98 | 60624712 | |
| 1.9 JTD | 932/A/B2 | D | 1910 | AR32302,AR37101 | M | + | | C | 09/97 ▸ 03/03 | 60657849 | **696111** |
| 1.9 JTD | 932/A/A2/B2 | D | 1910 | AR32302,AR37101 | M | - | | C | 09/97 ▸ 03/03 | 60814437 | |
| 1.9 JTD<br>▸ 0342867 | 932/A/B2 | D | 1910 | AR32302 | M | + | | | 09/97 ▸ 09/00 | 60692693 | **696111** |
| 2.4 JTD | 932A | D | 2387 | AR32501 | M | + | | C | 09/97 ▸ 12/98 | 60624712 | |

Fan System Groupe moto-ventilateur Lüftersystem Gruppo Motoventilatore Fan-systeem Fan sistemi
Grupo motorventilador Модуль вентилятора ventilátor rendszer Modul sahary Modul ventilator Σύστημα ανεμιστήρα



• **New** Nouveau **Nuevo** Novo **Nuovo** Nieuw **Neu** Nowość **Yeni** Новый Νέο **Novy**

| | Type Ctr. | CC | | AC | | | OE | Valeo | |
|---|---|---|---|---|---|---|---|---|---|
| **ALFA ROMEO** (.../...) | | | | | | | | | |
| **156 (97>2003) (.../...)** | | | | | | | | | |
| 2.4 JTD,2.4 JTD 10V 932/A/A1/AX/B1/BX | D | 2387 | 839A6.000,841C.000,AR32501 | M | + | | 09/97 ▸ | 60657849 | 696111 |
| 2.4 JTD,2.4 JTD 10V 932/A/A1/AX/B1/BX | D | 2387 | 839A6.000,841C.000,AR32501 | M | + | | 10/98 ▸ 03/03 | 60692693 | 696111 |
| 2.4 JTD 932/A/A1/B1 | D | 2387 | 839A6.000,AR32501 | M | - | C | 09/97 ▸ 03/03 | 60814437 | |
| **156 (2003>2007)** | | | | | | | | | |
| 2.5 i V6 24V 932/A1/B1 | E | 2492 | AR32405 | M | + | | 04/03 ▸ 09/05 | 60692693 | 696111 |
| 2.5 i V6 24V 932/A1/B1 | E | 2492 | AR32405 | M | | | 04/03 ▸ | 60657849 | 696111 |
| 2.5 i V6 24V 932/A1/B1 | E | 2492 | AR32405 | A | + | | 04/03 ▸ 09/05 | 60692693 | 696111 |
| 2.5 i V6 24V 932/A1/B1 | E | 2492 | AR32405 | A | | | 04/03 ▸ | 60657849 | 696111 |
| 3.2 i V6 24V 932/AX/BX | E | 3179 | 932A.000 | M | +/- | | 04/03 ▸ 02/06 | 60692693 | 696111 |
| 1.9 JTD,1.9 JTD 16V 932/AX/BX | D | 1910 | 192A5.000,937A4.000 | M | +/- | | 04/03 ▸ 11/06 | 60694104 | 696113 |
| 1.9 JTD,1.9 JTD 16V 932/AX/BX | D | 1910 | 192A5.000,937A4.000 | M | | | 04/03 ▸ | 60681123 | 696113 |
| 1.9 JTD 16V 932AX | D | 1910 | 937A4.000 | M | | | 04/03 ▸ 11/06 | 60694104 | 696113 |
| 2.4 JTD 20V 932/AX/BX | D | 2387 | 841G.000,841M.000 | M | +/- | | 04/03 ▸ 01/06 | 60694104 | 696113 |
| 2.4 JTD 10V 932/AX/BX | D | 2387 | 841C.000 | M | +/- | | 04/03 ▸ 07/03 | 60692693 | 696111 |
| 2.4 JTD 20V 932/AX/BX | D | 2387 | 841G.000 | M | | | 04/03 ▸ | 60681123 | 696113 |
| 2.4 JTD 10V 932BX | D | 2387 | 841C.000 | M | | | 04/03 ▸ | 60657849 | 696111 |
| **159 (2005>2008)** | | | | | | | | | |
| 3.2 JTS V6 24V 939/AX/BX | E | 3196 | 939A.000 | M | | | 12/05 ▸ 02/08 | 60692221 | |
| 2.4 JTDM 20V 939/AX/BX | D | 2387 | 939A3.000 | M | | | 07/05 ▸ 02/08 | 60692221 | |
| 2.4 JTDM 20V 939/AX/BX | D | 2387 | 939A3.000 | A | | | 07/05 ▸ 02/08 | 60692221 | |
| **166 (98>2003)** | | | | | | | | | |
| 2.5 i V6 24V 936A2 | E | 2492 | AR34201,AR36201 | M | +/- | | 10/98 ▸ | 60652976 | •696109 |
| 2.5 i V6 24V 936A2 | E | 2492 | AR34201 | A | +/- | | 10/98 ▸ 10/00 | 60652976 | •696109 |
| 3.0 i V6 24V 936A1 ▸ 0034301 | E | 2959 | AR34301,AR36101 | M | +/- | | 10/98 ▸ | 60652976 | •696109 |
| 3.0 i V6 24V 936A1 ▸ 0034301 | E | 2959 | AR34301,AR34302,AR36101 | A | +/- | | 10/98 ▸ | 60652976 | •696109 |
| 2.4 JTD 10V 936AX | D | 2387 | 841C.000 | M | +/- | | 02/02 ▸ 07/03 | 60657822 | |
| 2.4 JTD 10V 936AX | D | 2387 | 841C.000 | M | +/- | | 07/03 ▸ 09/03 | 60692418 | •696109 |
| 2.4 JTD 936A2 | D | 2387 | 839A6.000,AR34202 | M | + | | 10/98 ▸ 09/03 | 60657822 | |
| 2.4 JTD 936A2 | D | 2387 | 839A6.000,AR34202 | M | - | | 10/98 ▸ 09/03 | 60814583 | |
| **166 (2003>)** | | | | | | | | | |
| 2.0 i Twin Spark 16V 936A3 | E | 1970 | AR36301 | M | +/- | | 10/03 ▸ 07/04 | 60692418 | •696109 |
| 2.5 i V6 24V 936A2 | E | 2492 | AR36201 | M | +/- | | 10/03 ▸ 07/04 | 60692421 | •696109 |
| 3.0 i V6 24V 936A1 | E | 2959 | AR36101 | A | +/- | | 10/03 ▸ 07/04 | 60692421 | •696109 |
| 3.2 i V6 24V 936AX | E | 3179 | 936A6.000 | M | +/- | | 10/03 ▸ 07/04 | 60692421 | •696109 |
| 2.4 JTD 10V,2.4 JTD 20V 936/A3/AX | D | 2387 | 841C.000,841G.000,841M.000 | M | +/- | | 10/03 ▸ 12/07 | 60692308 | |
| 2.4 JTD 20V 936AX | D | 2387 | 841H.000,841N.000 | A | +/- | | 10/03 ▸ 12/07 | 60692308 | |
| **BRERA** | | | | | | | | | |
| 3.2 JTS V6 24V 939DX | E | 3196 | 939A.000 | M | | | 01/06 ▸ 10/10 | 60692221 | |
| 2.4 JTDM 20V 939DX | D | 2387 | 939A3.000 | M | | | 01/06 ▸ 10/10 | 60692221 | |
| **GT** | | | | | | | | | |
| 1.8 i Twinspark 16V 937CX | E | 1747 | AR32205 | M | | | 01/04 ▸ 01/10 | 46849782 | |
| 2.0 JTS 16V 937CX | E | 1970 | 937A1.000 | M | | | 09/03 ▸ 01/06 | 46849782 | |
| 3.2 V6 24V 937CX | E | 3179 | 936A6.000 | M | | | 09/03 ▸ 01/08 | 60692693 | 696111 |
| 1.9 JTD 16V 937CX | D | 1910 | 937A5.000 | M | | | 09/03 ▸ 11/06 | 60692703 | |
| **MITO** | | | | | | | | | |
| 1.3 MJTD 90 16V 955AX | D | 1248 | 199A3.000/F | M | - | | 12/08 ▸ 07/10 | 55701372 | |
| **SPIDER II (2006>)** | | | | | | | | | |
| 3.2 i V6 24V 939EX | E | 3196 | 939A.000 | M | + | | 03/06 ▸ 09/10 | 60692221 | |
| 3.2 i V6 24V 939DX | E | 3196 | 939A.000 | A | + | | 02/07 ▸ 09/10 | 60692221 | |
| **AUDI** | | | | | | | | | |
| **A4 (2000>2004)** | | | | | | | | | |
| 1.6 i 8E20 ▸ 8E-1-075000 | E | 1595 | ALZ | M | + | | 12/00 ▸ 04/01 | 8E0121205C | |
| 1.6 i 8E20 ▸ 8E-1-075000 | E | 1595 | ALZ | M | + | | 12/00 ▸ 04/01 | 8E0121205 | |

# AUDI (.../...)

## A4 (2000>2004) (.../...)

| | | | CC | | | AC | | | OE | Valeo | |
|---|---|---|---|---|---|---|---|---|---|---|---|
| 1.8 i Turbo 20V ▸ 8E-1-075000 | 8E20 | E | 1781 | AVJ | M | + | | 12/00 ▸ 04/01 | 8E0121205E | | |
| 1.8 i Turbo 20V ▸ 8E-1-075000 | 8E20 | E | 1781 | AVJ | M | + | | 12/00 ▸ 04/01 | 8E0121205F | | |
| 2.0 i 20V ▸ 8E-1-075000 | 8E20 | E | 1984 | ALT | M | + | | 12/00 ▸ 04/01 | 8E0121205 | | |
| 2.0 i 20V ▸ 8E-1-075000 | 8E20 | E | 1984 | ALT | M | + | | 12/00 ▸ 04/01 | 8E0121205C | | |
| 2.0 i 20V ▸ 8E-1-075000 | 8E20 | E | 1984 | ALT | A | + | | 12/00 ▸ 04/01 | 8E0121205 | | |
| 2.0 i 20V ▸ 8E-1-075000 | 8E20 | E | 1984 | ALT | A | + | | 12/00 ▸ 04/01 | 8E0121205C | | |
| 3.0 i 30V,3.0 i V6 30V ▸ 8E-1-075000 | 8E2/0/5 | E | 2976 | ASN,BBJ | M | + | | 12/00 ▸ 04/01 | 8E0121205A | | |
| 3.0 i 30V,3.0 i V6 30V ▸ 8E-1-075000 | 8E2/0/5 | E | 2976 | ASN,BBJ | M | + | | 12/00 ▸ 04/01 | 8E0121205D | | |
| 3.0 i V6 30V ▸ 8E-1-075000 | 8E20 | E | 2976 | BBJ | M | + | | 04/01 ▸ 04/01 | 8E0121205E | | |
| 3.0 i V6 30V ▸ 8E-1-075000 | 8E20 | E | 2976 | BBJ | M | + | | 04/01 ▸ 04/01 | 8E0121205F | | |
| 3.0 i 30V,3.0 i V6 30V ▸ 8E-1-075000 | 8E2/0/5 | E | 2976 | ASN,AVK,BBJ | A | + | | 12/00 ▸ 04/01 | 8E0121205D | | |
| 3.0 i 30V,3.0 i V6 30V ▸ 8E-1-075000 | 8E2/0/5 | E | 2976 | ASN,AVK,BBJ | A | + | | 12/00 ▸ 04/01 | 8E0121205A | | |
| 3.0 i V6 30V ▸ 8E-1-075000 | 8E20 | E | 2976 | BBJ | A | + | | 04/01 ▸ 04/01 | 8E0121205E | | |
| 3.0 i V6 30V | 8E20 | E | 2976 | BBJ | A | + | | 04/01 ▸ 04/01 | 8E0121205F | | |

# BMW

## 1 SERIES E87

| | | | | | | | | | | | |
|---|---|---|---|---|---|---|---|---|---|---|---|
| 116i | UF/11/12 | E | 1596 | N45B16 | M | | | 09/04 ▸ 02/07 | 17427563259 | 696274 | |
| 116i | UF/21/22 | E | 1596 | N45B16 | A | | | 09/04 ▸ 02/07 | 17427563259 | 696274 | |
| 118i,120i | UF/31/32/51/52 | E | 1995 | N46B/20O1/20U1 | M | | | 09/04 ▸ 02/07 | 17427563259 | 696274 | |
| 118i,120i | UF/41/42/61/62 | E | 1995 | N46B/20O1/20U1 | A | | | 09/04 ▸ 02/07 | 17427563259 | 696274 | |
| 130i | UF92 | E | 2996 | N52B30A | M | +/- | | 07/05 ▸ 02/07 | 17427562080 | 696275 | |
| 130i | UF91 | E | 2996 | N52B30A | M | + | | 07/05 ▸ 02/07 | 17427562080 | 696275 | |
| 130i | UF02 | E | 2996 | N52B30A | A | + | | 07/05 ▸ 02/07 | 17427562080 | 696275 | |

## 1 SERIES E87 LCI

| | | | | | | | | | | | |
|---|---|---|---|---|---|---|---|---|---|---|---|
| 1.6 i 16V | UE/11/12 | E | 1596 | N45B16 | M | +/- | | 03/07 ▸ 08/07 | 17427563259 | 696274 | |
| 1.6 i 16V | UE/31/32 | E | 1597 | N43B1600 | M | +/- | | 09/07 ▸ | 17427563259 | 696274 | |
| 1.6 i 16V | UE/41/42 | E | 1597 | N43B1600 | A | +/- | | 09/07 ▸ | 17427563259 | 696274 | |
| 2.0 i 16V | UD/11/12, UE/51/52 | E | 1995 | N43B/20U0/2000 | M | +/- | | 03/07 ▸ | 17427563259 | 696274 | |
| 2.0 i 16V | UD/21/22, UE/61/62 | E | 1995 | N43B/2000/20U0 | A | +/- | | 03/07 ▸ | 17427563259 | 696274 | |
| 3.0 i 265 24V | UD/51/52 | E | 2996 | N52B3001 | M | +/- | | 03/07 ▸ 09/09 | 17427563259 | 696274 | |
| 3.0 i 265 24V | UD/51/52 | E | 2996 | N52B3001 | M | +/- | | 03/07 ▸ 09/09 | 17427562080 | 696275 | |
| 3.0 i 265 24V | UD/61/62 | E | 2996 | N52B3001 | A | +/- | | 03/07 ▸ 09/09 | 17427563259 | 696274 | |
| 3.0 i 265 24V | UD/61/62 | E | 2996 | N52B3001 | A | +/- | | 03/07 ▸ 09/09 | 17427562080 | 696275 | |

## 1 SERIES E81

| | | | | | | | | | | | |
|---|---|---|---|---|---|---|---|---|---|---|---|
| 1.6 i 16V | UB/71/72 | E | 1597 | N43B16A | M | +/- | | 09/07 ▸ 03/09 | 17427563259 | 696274 | |
| 1.6 i 16V | UB/81/82 | E | 1597 | N43B16A | A | +/- | | 09/07 ▸ 03/09 | 17427563259 | 696274 | |
| 2.0 i 16V | UA/71/72, UB/91/92 UC/11/12, UK/31/32, UM/11/12/51/52 | E | 1995 | N43B/2000/20U0/20A | M | +/- | | 01/07 ▸ | 17427563259 | 696274 | |
| 2.0 i 16V | UA/81/82, UB/01/02 UC/21/22, UK/41/42, UM/21/22/61/62 | E | 1995 | N43B/20U0/2000/20A | A | +/- | | 01/07 ▸ | 17427563259 | 696274 | |
| 3.0 i 24V,3.0 i 265 24V | UB/11/12, UC/31/32 UL/91/92 | E | 2996 | N52B/3001/30U1 | M | +/- | | 01/07 ▸ | 17427562080 | 696275 | |
| 3.0 i 258 24V | UB/11/12 | E | 2996 | N52B30A | M | +/- | | 09/09 ▸ | 17427563259 | 696274 | |
| 3.0 i 24V,3.0 i 265 24V | UB/21/22, UC/41/42 UL/01/02 | E | 2996 | N52B/3001/30U1 | A | +/- | | 01/07 ▸ | 17427562080 | 696275 | |
| 3.0 i 258 24V | UB/21/22 | E | 2996 | N52B30A | A | +/- | | 09/09 ▸ | 17427563259 | 696274 | |

## 3 SERIES E36

| | | | | | | | | | | | |
|---|---|---|---|---|---|---|---|---|---|---|---|
| 316i | BE/11/12, CA/71/72, CE/11/12, CG/10/11/12/16 18 | E | 1596 | M43B16 | M | - | | 09/93 ▸ 04/01 | 64508372039 | 696123 | |
| 316i | BE/21/22, CA/81/82, CE/21/22, CG/20/21/22/26 28 | E | 1596 | M43B16 | A | - | | 09/93 ▸ 04/01 | 64508372039 | 696123 | |

Fan System Groupe moto-ventilateur Lüftersystem Gruppo Motoventilatore Fan-systeem Fan sistemi
Grupo motorventilador Модуль вентилятора ventilátor rendszer Modul ventilator Σύστημα ανεμιστήρα



• **New** Nouveau **Nuevo** Novo **Nuovo** Nieuw **Neu** Nowość **Yeni** Новый Νέο **Novy**

| Type Ctr. | | CC | | AC | | | OE | Valeo | |
|---|---|---|---|---|---|---|---|---|---|

# BMW (.../...)

## 3 SERIES E36 (.../...)

| | | | | | | | | | | |
|---|---|---|---|---|---|---|---|---|---|---|
| 318ti | CG/51/52 | E | 1796 | M42B18 | M | + | | 09/94 ▸ 02/98 | 64508372039 | **696123** |
| 318i,318iS | BE/51/52, BH/31/32 CA/51/52/91/92, CE/31/32 | E | 1796 | M42B18,M43B18 | M | - | | 01/92 ▸ 02/00 | 64508372039 | **696123** |
| 318ti | CG/61/62 | E | 1796 | M42B18 | A | + | | 09/94 ▸ 02/96 | 64508372039 | **696123** |
| 318i,318iS | BE/61/62, BH/41/42 CA/01/02/61/62, CE/41/42 | E | 1796 | M42B18,M43B18 | A | - | | 01/92 ▸ 02/00 | 64508372039 | **696123** |
| 318ti | CG/71/72 | E | 1895 | M44B19 | M | + | | 01/96 ▸ 04/01 | 64508372039 | **696123** |
| 316i,318iS | CS//10/11/12/15/16 17/18 | E | 1895 | M43B/19-E46,M43B19-E46G,M44B/19 | M | - | | 12/95 ▸ 04/01 | 64508372039 | **696123** |
| 318ti | CG/81/82 | E | 1895 | M44B19 | A | + | | 01/96 ▸ 04/01 | 64508372039 | **696123** |
| 316i,318iS | CS/20/21/22/28 | E | 1895 | M43B19-E46,M44B19 | A | - | | 12/95 ▸ 04/01 | 64508372039 | **696123** |
| 318tds | CC/51/52, CF/51/52 CJ/50/51/52 | D | 1665 | M41D | M | - | | 09/94 ▸ 04/01 | 64508372039 | **696123** |

## 3 SERIES E46

| | | | | | | | | | | |
|---|---|---|---|---|---|---|---|---|---|---|
| 316i,316ti | AT/50/51/52, AX/30 31/32, AY/30/31/32 | E | 1796 | N42B/18/18VVT | M | + | | 05/01 ▸ | 17117525508 | **696118** |
| 316i,316ti | AT/60/61/62, AX/40 41/42, AY/40/41/42 | E | 1796 | N42B/18VVT/18 | A | + | | 05/01 ▸ | 17117525508 | **696118** |
| 316i,318Ci,318i | AL/10/11/12/30/31/32 BL/30/31/32, ER/10/11/12 | E | 1895 | M43B19-E46 | M | + | | 03/98 ▸ | 17117525508 | **696118** |
| 316i,318i | AL/10/11/12/30/31/32 AP/30/31/32 | E | 1895 | M43B19-E46 | M | + | | 03/98 ▸ 02/05 | 17117503762 | **696118** |
| 316i,318i | AL/10/11/12/30/31/32 AP/30/31/32 | E | 1895 | M43B19-E46 | M | - | | 03/98 ▸ 02/05 | 17117503761 | **696118** |
| 316i,318i | AL/20/21/22/40/41/42 AP/40/41/42 | E | 1895 | M43B19-E46 | A | +/- | | 03/98 ▸ 02/05 | 17117503762 | **696118** |
| 316i,318Ci | AL/20/21/22, BL/40 41/42, ER/20/21/22 | E | 1895 | M43B19-E46 | A | + | | 11/98 ▸ | 17117525508 | **696118** |
| 320Ci,320i | AM/10/18, BM11, AR 10/11/18 | E | 1991 | M52B20-EU3 | M | +/- | | 03/98 ▸ 09/01 | 17117503763 | **696118** |
| 320i | AM/10/18, AR/10/11/18 | E | 1991 | M52B20-EU3 | M | + | | 03/98 ▸ 09/01 | 17117525508 | **696118** |
| 320Ci,320i | AM/10/18, BM11, AR 10/11/18 | E | 1991 | M52B20-EU3 | M | + | | 03/98 ▸ | 64546905076 | **696119** |
| 320Ci,320i | AM/10/18, BM11, AR 10/11/18 | E | 1991 | M52B20-EU3 | M | + | | 03/98 ▸ 09/01 | 64546922554 | **696119** |
| 320Ci,320i | AM/20/28, BM21, AR 20/21/28 | E | 1991 | M52B20-EU3 | A | +/- | | 03/98 ▸ 09/01 | 17117503763 | **696118** |
| 320Ci,320i | AM/20/28, BM21, AR 20/21/28 | E | 1991 | M52B20-EU3 | A | + | | 03/98 ▸ | 64546905076 | **696119** |
| 320Ci,320i | AM/20/28, BM21, AR 20/21/28 | E | 1991 | M52B20-EU3 | A | + | | 03/98 ▸ 09/01 | 64546922554 | **696119** |
| 320i | AM/20/28, AR/20/21/28 | E | 1991 | M52B20-EU3 | A | + | | 03/98 ▸ 09/01 | 17117525508 | **696118** |
| 318Ci,318i,318ti | AU/50/51/52, AX/50 51/52, AY/70/71/72, BP71, BD/91/92, BV/70/71 72, BW/71/72 | E | 1995 | M43B20,N42B/20VVT/20A | M | + | | 09/01 ▸ | 17117525508 | **696118** |
| 318Ci,318i,318ti | AU/60/61/62, AX/60 61/62, BD10, BP81, AY/80/81/82, BV/80/81/82 BW/81/82 | E | 1995 | M43B20,N42B/20VVT/20A | A | + | | 09/01 ▸ | 17117525508 | **696118** |
| 320Ci,320i | BD/11/12, BS11, BN 11/12, BW/11/12, EN/10/11/12/18, ZV18, EV/10 11/12 | E | 2171 | M54B22 | M | + | | 07/00 ▸ | 17117525508 | **696118** |
| 320Ci,320i | BD/11/12, BS11, BN 11/12, BW/11/12, EN/10/11/12/18, ZV18, EV/10 11/12 | E | 2171 | M54B22 | M | + | | 07/00 ▸ 07/06 | 64546922554 | **696119** |
| 320Ci,320i | BD/21/22, BS21, BN 21/22, BW/21/22, EN/20/21/22/28, ZV28, EV/20 21/22 | E | 2171 | M54B22 | A | + | | 07/00 ▸ | 17117525508 | **696118** |
| 320Ci,320i | BD/21/22, BS21, BN 21/22, BW/21/22, EN/20/21/22/28, ZV28, EV/20 21/22 | E | 2171 | M54B22 | A | + | | 07/00 ▸ 07/06 | 64546922554 | **696119** |
| 323Ci,323i | AM/30/32/38, BM/31 32 | E | 2494 | M52B25-EU3 | M | +/- | | 03/98 ▸ 12/00 | 17117503763 | **696118** |
| 323Ci,323i,325Ci,325i 325ti,325xi | AM/30/32/38, AT/31 32, BD/31/32, BM/31 32, BR31, BS31, BN/31/32, BW/31/32, EN/30/31 32/38, EP/30/31/38, EU/30/31/38, ZV30, EV/30 31/32 | E | 2494 | M52B25-EU3,M54B/25-6S5/25 | M | + | | 03/98 ▸ | 17117525508 | **696118** |
| 323Ci,323i | AM/30/32/38, BM/31 32 | E | 2494 | M52B25-EU3 | M | + | | 03/98 ▸ | 64546905076 | **696119** |

# BMW (.../...)

## 3 SERIES E46 (.../...)

| Type Ctr. | | CC | | AC | | | OE | Valeo | |
|---|---|---|---|---|---|---|---|---|---|
| 323Ci,323i,325Ci,325i 325ti,325xi AM/30/32/38, AT/31 32, BD/31/32, BM/31 32, BS31, BN/31/32, BW/31/32, EN/30/31/32/38 EP/30/31/38, EU/30/31/38, ZV30, EV/30/31/32 | E | 2494 | M52B/25-EU3,M54B/25,M54B25-6S5 | M | + | | 03/98 ▸ 05/06 | 64546922554 | **696119** |
| 323Ci,323i AM/40/42/48, BM/41 42 | E | 2494 | M52B25-EU3 | A | +/- | | 03/98 ▸ 12/00 | 17117503763 | **696118** |
| 323Ci,323i,325Ci,325i 325ti,325xi AM/40/42/48, AT/41 42, BD/41/42, BM/41 42, BR41, BS41, BN/41/42, BW/41/42, EN/40/41 42/48, EP/40/41/48, EU/40/41/48, ZV40, EV/40 41/42 | E | 2494 | M52B/25-EU3,M54B/25/25-6S5 | A | + | | 03/98 ▸ | 17117525508 | **696118** |
| 323Ci,323i,325Ci,325i 325ti,325xi AM/40/42/48, AT/41 42, BD/41/42, BM/41 42, BS41, BN/41/42, BW/41/42, EN/40/41/42/48 EP/40/41/48, EU/40/41/48, ZV40, EV/40/41/42 | E | 2494 | M52B/25-EU3,M54B/25/25-6S5 | A | + | | 03/98 ▸ 05/06 | 64546922554 | **696119** |
| 323Ci,323i AM/40/42/48, BM/41 42 | E | 2494 | M52B25-EU3 | A | + | | 03/98 ▸ | 64546905076 | **696119** |
| 328Ci BM/51/52 | E | 2793 | M52B28-EU3 | M | +/- | | 03/99 ▸ 12/00 | 17117503763 | **696118** |
| 328Ci,328i AM/50/52/58, AR/50 52/58, BM/51/52 | E | 2793 | M52B28-EU3 | M | + | | 03/98 ▸ | 64546905076 | **696119** |
| 328Ci,328i AM/50/52/58, AR/50 52/58, BM/51/52 | E | 2793 | M52B28-EU3 | M | + | | 03/98 ▸ 12/00 | 64546922554 | **696119** |
| 328Ci,328i AM/50/52/58, AR/50 52/58, BM/51/52 | E | 2793 | M52B28-EU3 | M | + | | 03/98 ▸ 12/00 | 17117525508 | **696118** |
| 328i AM/50/52/58 | E | 2793 | M52B28-EU3 | M | - | | 03/98 ▸ 12/00 | 17117503762 | **696118** |
| 328i AM/50/52/58, AR/50/52/58 | E | 2793 | M52B28-EU3 | M | - | | 03/98 ▸ 12/00 | 17117503763 | **696118** |
| 328Ci,328i AM/60/62/68, AR/60 62/68, BM/61/62 | E | 2793 | M52B28-EU3 | A | +/- | | 03/98 ▸ 12/00 | 17117503763 | **696118** |
| 328Ci,328i AM/60/62/68, AR/60 62/68, BM/61/62 | E | 2793 | M52B28-EU3 | A | + | | 03/98 ▸ 12/00 | 64546922554 | **696119** |
| 328Ci,328i AM/60/62/68, AR/60 62/68, BM/61/62 | E | 2793 | M52B28-EU3 | A | + | | 03/98 ▸ 12/00 | 17117525508 | **696118** |
| 328Ci,328i AM/60/62/68, AR/60 62/68, BM/61/62 | E | 2793 | M52B28-EU3 | A | + | | 03/98 ▸ | 64546905076 | **696119** |
| 328i AM/60/62/68 | E | 2793 | M52B28-EU3 | A | - | | 03/98 ▸ 12/00 | 17117503762 | **696118** |
| 330Ci,330i,330xi AV/50/58, AW/50/58 BD/51/52, BS51, BN/51/52, BW/51/52, EN/50 51/52/58, EP/50/51/58, EV/50/51/52/58, EW/50 51/58 | E | 2979 | 306S3,M54B30 | M | + | | 04/00 ▸ | 17117525508 | **696118** |
| 330Ci,330i,330xi AV/50/58, AW/50/58 BD/51/52, BS51, BN/51/52, BW/51/52, EN/50 51/52/58, EP/50/51/58, EV/50/51/52/58, EW/50 51/58 | E | 2979 | 306S3,M54B30 | M | + | | 04/00 ▸ 08/06 | 64546922554 | **696119** |
| 330xi EW51 | E | 2979 | 306S3 | M | + | | 09/01 ▸ 02/05 | 17117503762 | **696118** |
| 330xi EW51 | E | 2979 | 306S3 | M | - | | 09/01 ▸ 02/05 | 17117503761 | **696118** |
| 330xi EW61 | E | 2979 | 306S3 | A | +/- | | 09/01 ▸ 02/05 | 17117503762 | **696118** |
| 330Ci,330i,330xi AW60, AV/60/68, BD 61/62, BS61, BN/61/62, BW/61/62, EN/60/61/62 68, EP/60/61/68, EV/60/61/62/68, EW/60/61/68 | E | 2979 | 306S3,M54B30 | A | + | | 04/00 ▸ 08/06 | 64546922554 | **696119** |
| 330Ci,330i,330xi AW60, AV/60/68, BD 61/62, BS61, BN/61/62, BW/61/62, EN/60/61/62 68, EP/60/61/68, EV/60/61/62/68, EW/60/61/68 | E | 2979 | 306S3,M54B30 | A | + | | 04/00 ▸ | 17117525508 | **696118** |
| 318d,320Cd,320d AP/70/71/72/78, AS 70/71/72/78, AT/70/71/72/91/92, BV/51/52, EL 71/72 | D | 1995 | M47D20TU,M47N20 | M | + | | 09/01 ▸ | 64546922555 | **696119** |
| 318d,320Cd,320d AP/80/81/82/88, AS 80/81/82/88, AT/80/81/82, BV/61/62, EL/81/82 | D | 1995 | M47D20TU,M47N20 | A | + | | 09/01 ▸ | 64546922555 | **696119** |
| 330d,330xd AL/90/91/98, AP/90 91/98, EL/90/98, EP/70/78, EV/90/91/98 | D | 2926 | 306D1 | M | + | | 09/99 ▸ 02/03 | 64546922555 | **696119** |
| 330d,330xd AP00, EL00, EP80, AL 00/01/08, EV/00/08 | D | 2926 | 306D1 | A | + | | 09/99 ▸ 02/03 | 64546922555 | **696119** |
| 330Cd,330d,330xd BV/91/92, ED/71/91 92, ER/90/91/92/98, EX/71/91/92 | D | 2993 | M57D/30-204/30TU | M | + | | 03/03 ▸ 05/06 | 64546922555 | **696119** |
| 330Cd,330d,330xd BV/10, ED/10/81, ER 00/02/08, EX/10/81 | D | 2993 | M57D/30-204/30TU | A | + | | 03/03 ▸ 05/06 | 64546922555 | **696119** |

## 3 SERIES E90

| | | | | | | | | | |
|---|---|---|---|---|---|---|---|---|---|
| 316i | E | 1596 | N45B16 | M | + | | 03/05 ▸ 01/07 | 17427563259 | **696274** |
| 316i VF/31/32 | E | 1597 | N43B16A | M | + | | 02/07 ▸ 09/08 | 17427563259 | **696274** |
| 316i | E | 1796 | N42B18VVT | M | + | | 02/06 ▸ | 17427563259 | **696274** |

Fan System Groupe moto-ventilateur Lüftersystem Gruppo Motoventilatore Fan-systeem Fan sistemi
Grupo motorventilador Модуль вентилятора ventilátor rendszer Modul sahary Modul ventilator Σύστημα ανεμιστήρα



• **New** Nouveau **Nuevo** Novo **Nuovo** Nieuw **Neu** Nowość **Yeni** Новый Νέο **Novy**

# BMW (.../...)

## 3 SERIES E90 (.../...)

| | | | | | | | | | | |
|---|---|---|---|---|---|---|---|---|---|---|
| 318i,320i | VA/51/52/71/72, VF 51/52/91/92, VR/31/32/51/52/71/72/91/92, WA 71/72, WK/71/72 | E | 1995 | N43B/2000/20U0,N46B/2001/20U1 | M | + | | 03/05 ▸ | 17427563259 | 696274 |
| 320si | VF/71/72 | E | 1997 | N45B20A | M | + | | 02/06 ▸ 09/08 | 17427563259 | 696274 |
| 325i,325xi | VD11, VB/11/12, VT11 VS/11/12, WC31, WB/31/32 | E | 2497 | N52B2500 | M | + | | 03/05 ▸ 08/07 | 17427563259 | 696274 |
| 325i,325xi | VD11, VB/11/12, VT11 VS/11/12, WC31, WB/31/32, WN/31/32 | E | 2497 | N52B/2500/25A | M | + | | 03/05 ▸ | 17427562080 | 696275 |
| 325i,325xi | VD21, VB/21/22, VT21 VS/21/22, WC41, WB/41/42, WN/41/42 | E | 2497 | N52B/25A/2500 | A | + | | 03/05 ▸ | 17427562080 | 696275 |
| 325i,325xi | VD/21, VT21, VS/21 22, WC41, WB/41/42, WN/41/42 | E | 2497 | N52B/2500/25A | A | + | | 09/05 ▸ | 17427563259 | 696274 |
| 330i,330xi | VD31, VB/31/32, VT31 VS/31/32, WC51, WB/51/52 | E | 2996 | N52B/3000/30A | M | + | | 03/05 ▸ 08/07 | 17427562080 | 696275 |
| 330i,330xi | VD31, VB/31/32, VT31 VS/31/32, WC51, WB/51/52 | E | 2996 | N52B/3000/30A | M | + | | 03/05 ▸ 08/07 | 17427563259 | 696274 |
| 330i,330xi | VD41, VB/41/42, VT41 VS/41/42, WC61, WB/61/62 | E | 2996 | N52B/3000/30A | A | + | | 03/05 ▸ 08/07 | 17427562080 | 696275 |
| 330i,330xi | VD/41, VT41, VS/41 42, WC61, WB/61/62 | E | 2996 | N52B/3000/30A | A | + | | 09/05 ▸ 08/07 | 17427563259 | 696274 |

## 3 SERIES LCI E90/E91

| | | | | | | | | | | |
|---|---|---|---|---|---|---|---|---|---|---|
| 1.6 i 16V | PF/31/32, US/11/12 | E | 1597 | N43B16A | M | + | | 09/08 ▸ | 17427563259 | 696274 |
| 2.0 i 16V | PF/51/52, PG/31/32 US/31/32/91/92 | E | 1995 | N43B/2000/20U0 | M | + | | 09/08 ▸ | 17427563259 | 696274 |
| 2.0 i 16V | PF/61/62, PG/41/42 US/01/02/41 | E | 1995 | N43B/20U0/2000 | A | + | | 09/08 ▸ | 17427563259 | 696274 |
| 3.0 i 24V | PK31, PL11, PH/31/32 PM/11/12, UT/71/72, UU/51/52/71, UV/51/52 | E | 2996 | N53B/3000/30U0 | M | + | | 09/08 ▸ | 17427563259 | 696274 |
| 3.0 i 24V | PK41, PL21, PH/41/42 PM/21/22, UU81, UT/81/82, UV/61/62 | E | 2996 | N53B/3000/30U0 | A | + | | 09/08 ▸ | 17427563259 | 696274 |

## 5 SERIES E39

| | | | | | | | | | | |
|---|---|---|---|---|---|---|---|---|---|---|
| 520i | DD/11/12, DH/11/12 | E | 1991 | M52B20 | M | + | | 07/96 ▸ 09/98 | 64548380780 | 696120 |
| 520i | DD/11/12, DH/11/12, DM/10/11, DR/10/11 | E | 1991 | M52B/20/20-EU3 | M | + | | 09/98 ▸ 04/04 | 64546921395 | 696121 |
| 520i | DD/21/22, DH/21/22 | E | 1991 | M52B20 | A | + | | 07/96 ▸ 09/98 | 64548380780 | 696120 |
| 520i | DD/21/22, DH/21/22, DM/20/21, DR/20/21 | E | 1991 | M52B/20/20-EU3 | A | + | | 09/98 ▸ 04/04 | 64546921395 | 696121 |
| 520i | DS/10/11, DT/11/21 | E | 2171 | M54B22 | M | + | | 07/00 ▸ 04/04 | 64546921395 | 696121 |
| 520i | DS/20/21, DT/10/20 | E | 2171 | M54B22 | A | + | | 07/00 ▸ 04/04 | 64546921395 | 696121 |
| 523i | DD/31/32, DH/31/32 | E | 2494 | M52B25 | M | + | | 09/95 ▸ 09/98 | 64548380780 | 696120 |
| 523i,525i | DD/31/32, DH/31/32 DM/30/31, DR/30/31, DT30, ZT38, DS/30/38 | E | 2494 | M52B/25,M52B25-EU3,M54B/25 | M | + | | 09/98 ▸ 04/04 | 64546921395 | 696121 |
| 523i | DD/41/42, DH/41/42 | E | 2494 | M52B25 | A | + | | 10/95 ▸ 09/98 | 64548380780 | 696120 |
| 523i,525i | DD/41/42, DH/41/42 DM/40/41, DR/40/41, DT40, ZT48, DS/40/48 | E | 2494 | M52B/25-EU3/25,M54B/25 | A | + | | 09/98 ▸ 04/04 | 64546921395 | 696121 |
| 528i | DD/51/52, DH/51/52 | E | 2793 | M52B28 | M | + | | 09/95 ▸ 09/98 | 64548380780 | 696120 |
| 528i | DD/51/52, DH/51/52, DM/51/58, DP/50/58 | E | 2793 | M52B/28-EU3/28 | M | + | | 09/98 ▸ 04/04 | 64546921395 | 696121 |
| 528i | DD/60/61/62, DH/61/62 | E | 2793 | M52B28 | A | + | | 09/95 ▸ 09/98 | 64548380780 | 696120 |
| 528i | DD/60/61, DH/61/62, DM/61/68, DP/60/68 | E | 2793 | M52B/28/28-EU3 | A | + | | 09/98 ▸ 04/04 | 64546921395 | 696121 |
| 528i | DD62 | E | 2793 | M52B28 | A | | | 09/98 ▸ 04/03 | 64546921395 | 696121 |
| 530i | DT50, ZT58, DS/50/58 | E | 2979 | 306S3 | M | + | | 07/00 ▸ 04/04 | 64546921395 | 696121 |
| 530i | DT60, ZT68, DS/60/68 | E | 2979 | 306S3 | A | + | | 07/00 ▸ 04/04 | 64546921395 | 696121 |
| 535i | DE/11/12 | E | 3498 | M62B35 | M | + | | 07/96 ▸ 09/98 | 64548380780 | 696120 |
| 535i | DN11, DE/11/12 | E | 3498 | M62B/35/35-245 | M | + | | 09/98 ▸ 04/03 | 64546921395 | 696121 |
| 535i | DE/21/22 | E | 3498 | M62B35 | A | + | | 07/96 ▸ 09/98 | 64548380780 | 696120 |
| 535i | DN21, DE/21/22 | E | 3498 | M62B/35/35-245 | A | + | | 09/98 ▸ 04/03 | 64546921395 | 696121 |
| 540i | DE/51/52, DJ/51/52 | E | 4398 | 448S1 | M | + | | 07/96 ▸ 09/98 | 64548380780 | 696120 |
| 540i | DE/51/52, DN51, DR51, DJ/51/52 | E | 4398 | 448S/1/2 | M | + | | 09/98 ▸ 04/04 | 64546921395 | 696121 |
| 540i | DE/61/62, DJ/61/62 | E | 4398 | 448S1 | A | + | | 07/96 ▸ 09/98 | 64548380780 | 696120 |
| 540i | DE/61/62, DJ/61/62, DR61, DN/61/81 | E | 4398 | 448S/1/2 | A | + | | 09/98 ▸ 04/04 | 64546921395 | 696121 |
| 520d | DM/70/71, DR/70/71 | D | 1951 | M47D20 | M | | | 09/01 ▸ 03/02 | 64546921397 | 696121 |
| 525Td,525Tds | DF/50/51/70/71/72 DJ/71/72 | D | 2497 | M51D25 | M | + | | 10/95 ▸ 09/98 | 64548380780 | 696120 |
| 525Tds | DF/70/71/72/78, DG 70/71/78, DJ/71/72 | D | 2497 | M51D25 | M | + | | 09/98 ▸ 04/04 | 64546921395 | 696121 |
| 525Td | DF/50/51 | D | 2497 | M51D25 | M | | | 09/98 ▸ 04/03 | 64546921395 | 696121 |
| 525d,525tds | DF/78, DG/70/71/78 DL/90/91/98, DP/90/91/98 | D | 2497 | M51D25,M57D25 | M | | | 09/01 ▸ 03/02 | 64546921397 | 696121 |
| 525Tds | DF/80/81/82, DJ/81 82 | D | 2497 | M51D25 | A | + | | 10/95 ▸ 09/98 | 64548380780 | 696120 |

# BMW (.../...)

| Type | | | CC | | | AC | | | OE | Valeo | |
|---|---|---|---|---|---|---|---|---|---|---|---|
| **5 SERIES E39 (.../...)** | | | | | | | | | | | |
| 525tds | DF/80/81/82/88, DG 80/81/88, DJ/81/82 | D | 2497 | M51D25 | A | + | | 09/98 ▸ 04/04 | 64546921395 | **696121** | |
| 525d,525tds | DF/88, DG/80/81/88 DL/00/01/08, DP/00/01/08 | D | 2497 | M51D25,M57D25 | A | | | 09/01 ▸ 03/02 | 64546921397 | **696121** | |
| 530d | DL/, DP//71/72 | D | 2926 | M57D30-193 | M | | | 09/01 ▸ 03/02 | 64546921397 | **696121** | |
| 530d | DL/, DP//81/82 | D | 2926 | M57D30-193 | A | | | 09/01 ▸ 03/02 | 64546921397 | **696121** | |
| **5 SERIES E60** | | | | | | | | | | | |
| 525i | NA/61/62, NG/61/62 | E | 2494 | M54B25-6S5 | A | + | | 09/03 ▸ 02/05 | 17427543282 | **696273** | |
| 525i | NA/61/62, NG/61/62 | E | 2494 | M54B25-6S5 | A | + | | 09/03 ▸ 02/05 | 17427524881 | | |
| 523i,525i,525xi | NF31, NE/31/51, NN51 NL/31/51 | E | 2497 | N52B/25UL/25O0 | M | + | | 03/05 ▸ 07/05 | 17427524881 | | |
| 523i,525i,525xi | NF31, NE/31/51, NN51 NL/31/51 | E | 2497 | N52B/25UL/25O0 | M | + | | 09/05 ▸ 12/06 | 17427540683 | | |
| 523i,525i,525xi | NF41, NE/41/61, NN61 NL/41/61 | E | 2497 | N52B/25UL/25O0 | A | + | | 03/05 ▸ 07/05 | 17427524881 | | |
| 523i,525i,525xi | NF41, NE/41/61, NN61 NL/41/61 | E | 2497 | N52B/25O0/25UL | A | + | | 07/05 ▸ 12/06 | 17427543282 | **696273** | |
| 523i,525i | NE/41/61, NL/41/61 | E | 2497 | N52B/25UL/25O0 | A | - | | 09/05 ▸ 12/06 | 17427540683 | | |
| 530i | NA/71/72 | E | 2979 | 306S3 | M | + | | 05/03 ▸ 02/05 | 17427543282 | **696273** | |
| 530i | NA/81/82 | E | 2979 | 306S3 | A | + | | 05/03 ▸ 02/05 | 17427543282 | **696273** | |
| 530i,530xi | NF71, NL71, NN71, NE 71 | E | 2996 | N52B3000 | M | + | | 03/05 ▸ 07/05 | 17427524881 | | |
| 530xi | NF71, NN71 | E | 2996 | N52B3000 | M | + | | 07/05 ▸ 12/06 | 17427543282 | **696273** | |
| 530i | NE71, NL71 | E | 2996 | N52B3000 | M | + | | 09/05 ▸ 12/06 | 17427540683 | | |
| 530i,530xi | NF81, NL81, NN81, NE 81 | E | 2996 | N52B3000 | A | + | | 03/05 ▸ 07/05 | 17427524881 | | |
| 530i,530xi | NF81, NL81, NN81, NE 81 | E | 2996 | N52B3000 | A | + | | 07/05 ▸ 12/06 | 17427543282 | **696273** | |
| 530i | NE81, NL81 | E | 2996 | N52B3000 | A | - | | 09/05 ▸ 12/06 | 17427540683 | | |
| 545i | NB/31/32, NH/31/32 | E | 4398 | N62B44VVT | M | + | | 05/04 ▸ 09/05 | 17427543282 | **696273** | |
| 545i | NB/41/42, NH/41/42 | E | 4398 | N62B44VVT | A | + | | 07/05 ▸ 09/05 | 17427543282 | **696273** | |
| **5 SERIES E60/61 LCI** | | | | | | | | | | | |
| 2.0 i 16V | NT/31/32, PT/11/12 | E | 1995 | N43B2000 | M | | | 09/07 ▸ | 17427540683 | | |
| 2.0 i 16V | NT/41/42, PT/21/22 | E | 1995 | N43B2000 | A | | | 09/07 ▸ | 17427540683 | | |
| 2.5 i 24V | NU32, PU32 | E | 2497 | N53B25U0 | M | | | 01/07 ▸ | 17427543282 | **696273** | |
| 2.5 i 24V | NU32, PU32 | E | 2497 | N53B25U0 | M | | | 01/07 ▸ | 17427540683 | | |
| 2.5 i 24V | NU42, PU42 | E | 2497 | N53B25U0 | A | | | 01/07 ▸ | 17427540683 | | |
| 2.5 i 24V | NU42, PU42 | E | 2497 | N53B25U0 | A | | | 01/07 ▸ | 17427543282 | **696273** | |
| 3.0 i 24V | NK72, NU72, PU72, ND 72 | E | 2996 | N53B/30U0/30O0 | M | | | 01/07 ▸ | 17427540683 | | |
| 3.0 i 24V | NK72, NU72, PU72, ND 72 | E | 2996 | N53B/30U0/30O0 | M | | | 01/07 ▸ | 17427543282 | **696273** | |
| 3.0 i 24V | NK82, NU82, PU82, ND 82 | E | 2996 | N53B/30O0/30U0 | A | | | 01/07 ▸ | 17427543282 | **696273** | |
| 3.0 i 24V | NK82, NU82, PU82, ND 82 | E | 2996 | N53B/30U0/30O0 | A | | | 01/07 ▸ | 17427540683 | | |
| **6 SERIES E63/E64 (2007>)** | | | | | | | | | | | |
| 3.0 i 24V | EA32, EB32 | E | 2996 | N53B3000 | M | + | | 09/07 ▸ | 17427540683 | | |
| 3.0 i 24V | EA42, EB42 | E | 2996 | N53B3000 | A | + | | 09/07 ▸ | 17427540683 | | |
| **7 SERIES E65** | | | | | | | | | | | |
| 730i | GL/21/22 | E | 2979 | M54B30 | A | + | | 09/03 ▸ 02/05 | 17427524881 | | |
| 730i | HL/21/22 | E | 2996 | N52B3000 | A | | | 03/05 ▸ 10/08 | 17427543282 | **696273** | |
| 735i | GL/41/42 | E | 3600 | N62B36VVT | A | + | | 03/03 ▸ 02/05 | 17427524881 | | |
| 740i | HL/61/62 | E | 4000 | N62B40TU | A | + | | 03/05 ▸ 06/05 | 17427524881 | | |
| 745i | GL/61/62 | E | 4398 | N62B44VVT | A | + | | 03/03 ▸ 02/05 | 17427524881 | | |
| 750i | HL/81/82 | E | 4799 | N62B48TU | A | + | | 03/05 ▸ 06/05 | 17427524881 | | |
| **7 SERIES E66** | | | | | | | | | | | |
| 730Li | GN/21/22 | E | 2979 | M54B30 | A | + | | 09/03 ▸ 02/05 | 17427524881 | | |
| 730Li | HN/21/22 | E | 2996 | N52B3000 | A | + | | 03/05 ▸ 10/08 | 17427543282 | **696273** | |
| 735Li | GN/41/42 | E | 3600 | N62B36VVT | A | + | | 03/02 ▸ 02/05 | 17427524881 | | |
| 740Li | HN/61/62 | E | 4000 | N62B40TU | A | + | | 03/05 ▸ 10/08 | 17427524881 | | |
| 745Li | GN/61/62 | E | 4398 | N62B44VVT | A | + | | 03/02 ▸ 02/05 | 17427524881 | | |
| 750Li | HN/81/82 | E | 4799 | N62B48TU | A | + | | 03/05 ▸ 10/08 | 17427543282 | **696273** | |

Fan System Groupe moto-ventilateur Lüftersystem Gruppo Motoventilatore Fan-systeem Fan sistemi
Grupo motorventilador Модуль вентилятора ventilátor rendszer Modul sahary Modul ventilator Σύστημα ανεμιστήρα



• **New** Nouveau **Nuevo** Novo **Nuovo** Nieuw **Neu** Nowość **Yeni** Новый Νέο **Novy**

| Type Ctr. | | CC | | AC | | | OE | Valeo | |
|---|---|---|---|---|---|---|---|---|---|
| **BMW (.../...)** | | | | | | | | | |
| **7 SERIES E66 (.../...)** | | | | | | | | | |
| 750Li HN/81/82 | E | 4799 | N62B48TU | A | + | | 03/05 ▸ 06/05 | 17427524881 | |
| **M5 E39** | | | | | | | | | |
| 5.0 i DE91 | E | 4941 | S62B50 | M | | | 07/99 ▸ 06/03 | 64546921395 | **696121** |
| **X3 (2003>2006)** | | | | | | | | | |
| 2.0 i 16V PA31 | E | 1995 | N46B2001 | M | + | | 09/05 ▸ | 17113414008 | |
| 2.5 i 24V PA71 | E | 2494 | M54B25-6S5 | M | + | | 03/04 ▸ | 17113414008 | |
| 2.5 i 24V PA71 | E | 2494 | M54B25-6S5 | M | | | 03/04 ▸ | 17113401056 | |
| 2.5 i 24V PA71 | E | 2494 | M54B25-6S5 | A | + | | 10/05 ▸ | 17113414008 | |
| 2.5 i 24V PA71 | E | 2494 | M54B25-6S5 | A | | | 03/04 ▸ 07/04 | 17113400022 | |
| 2.5 i 24V PA71 | E | 2494 | M54B25-6S5 | A | | | 03/04 ▸ | 17113415181 | |
| 2.5 i 24V PA71 | E | 2494 | M54B25-6S5 | A | | | 03/04 ▸ 07/06 | 17113442089 | |
| 3.0 i 24V PA91 | E | 2979 | 306S3 | M | | | 10/03 ▸ | 17113401056 | |
| 3.0 i 24V PA91 | E | 2979 | 306S3 | M | | | 10/03 ▸ | 17113414008 | |
| 3.0 i 24V PA91 | E | 2979 | 306S3 | A | | | 10/03 ▸ 07/04 | 17113400022 | |
| 3.0 i 24V PA91 | E | 2979 | 306S3 | A | | | 10/03 ▸ | 17113415181 | |
| 3.0 i 24V PA91 | E | 2979 | 306S3 | A | | | 10/03 ▸ 07/06 | 17113442089 | |
| 2.0 d PB11 | D | 1995 | M47D20TU | M | + | | 09/04 ▸ | 17113414008 | |
| 3.0 d PD51 | D | 2993 | 306D2 | M | + | | 09/05 ▸ 07/06 | 17113442089 | |
| 3.0 d PB51 | D | 2993 | M57D30-204 | M | | | 10/03 ▸ 09/05 | 17113442089 | |
| 3.0 d PB51 | D | 2993 | M57D30-204 | M | | | 10/03 ▸ 07/04 | 17113400022 | |
| 3.0 d PB51 | D | 2993 | M57D30-204 | M | | | 10/03 ▸ | 17113415181 | |
| 3.0 d PB51, PD61 | D | 2993 | 306D2,M57D30-204 | A | + | | 10/03 ▸ 07/06 | 17113415182 | |
| 3.0 d PB51 | D | 2993 | M57D30-204 | A | | | 10/03 ▸ 07/04 | 17113404398 | |
| **X3 E83 LCI (2006>)** | | | | | | | | | |
| 2.0 i PC/31/32 | E | 1995 | N46B20B | M | + | | 08/06 ▸ | 17113414008 | |
| 2.5 si 24V PC/71/72 | E | 2497 | N52B25A | M | + | | 08/06 ▸ 12/06 | 17113442089 | |
| 2.5 si 24V PC/71/72 | E | 2497 | N52B25A | M | + | | 12/06 ▸ | 17113414008 | |
| 2.5 si 24V PC/81/82 | E | 2497 | N52B25A | A | + | | 08/06 ▸ | 17113442089 | |
| 2.5 si 24V PC/81/82 | E | 2497 | N52B25A | A | + | | 08/06 ▸ | 17113414008 | |
| 3.0 si PC/91/92 | E | 2996 | N52B30A | M | + | | 08/06 ▸ 12/06 | 17113442089 | |
| 3.0 si PC/91/92 | E | 2996 | N52B30A | M | + | | 12/06 ▸ | 17113414008 | |
| 3.0 si PC/01/02 | E | 2996 | N52B30A | A | + | | 08/06 ▸ | 17113414008 | |
| 3.0 si PC/01/02 | E | 2996 | N52B30A | A | + | | 08/06 ▸ | 17113442089 | |
| 2.0 d PD/11/12 | D | 1995 | M47D20TU | M | + | | 08/06 ▸ | 17113414008 | |
| 2.0 d PE/11/12 | D | 1995 | N47D2000 | M | + | | 09/07 ▸ | 17113442089 | |
| 2.0 d PE/21/22 | D | 1995 | N47D2000 | A | + | | 09/07 ▸ | 17113442089 | |
| 2.0 d PE/21/22 | D | 1995 | N47D2000 | A | + | | 09/07 ▸ | 17113415182 | |
| 3.0 d PD/91/92 | D | 2993 | 306D2,M57D30TU | M | + | | 08/06 ▸ | 17113442089 | |
| 3.0 d,3.0 sd PD/01/02/71/72 | D | 2993 | 306D/5,306D2,M57D/30TU | A | + | | 08/06 ▸ | 17113415182 | |
| **X5 (2000>2006)** | | | | | | | | | |
| 3.0 i 24V FA//51 | E | 2979 | 306S3 | M | + | | 01/00 ▸ 11/06 | 64546921381 | |
| 3.0 i 24V FA/11/18 | E | 2979 | 306S3 | A | + | | 01/00 ▸ 11/06 | 64546921381 | |
| 4.4 i FB/31/38/3S/51/7S | E | 4398 | 448S2,N62B44A | A | + | | 01/00 ▸ 11/06 | 64546921381 | |
| 4.4 i FB/51/7S | E | 4398 | N62B44A | A | + | | 08/03 ▸ 11/06 | 17427521767 | |
| 4.6 is FB91 | E | 4619 | 468S1 | A | + | | 09/01 ▸ 11/06 | 64546921381 | |
| 4.8 is FA91 | E | 4799 | N62B48A | A | + | | 03/04 ▸ 11/06 | 17427521767 | |
| 4.8 is FA91 | E | 4799 | N62B48A | A | + | | 03/04 ▸ 11/06 | 64546921381 | |
| 3.0 d FA//71 | D | 2926 | 306D1 | M | | | 03/01 ▸ 08/03 | 64546921382 | |
| 3.0 d FA/70/71/78 | D | 2926 | 306D1 | A | | | 03/01 ▸ 08/03 | 64546921382 | |
| 3.0 d 24V FB70 | D | 2993 | 306D2 | M | | | 08/03 ▸ 11/06 | 64546921382 | |
| 3.0 d 24V FB70 | D | 2993 | 306D2 | A | | | 08/03 ▸ 11/06 | 64546921382 | |
| **Z3** | | | | | | | | | |
| 1.8 i CJ11 | E | 1796 | M43B18 | M | | | 01/96 ▸ 08/98 | 64508372039 | **696123** |
| 1.8 i CJ21 | E | 1796 | M43B18 | A | | | 01/96 ▸ 08/98 | 64508372039 | **696123** |
| 1.9 i,1.9 i 16V CH/71, CM/11/12 | E | 1895 | M43B19-EU3,M44B19 | M | | | 01/96 ▸ 06/02 | 64508372039 | **696123** |
| 1.9 i 16V CH81 | E | 1895 | M44B19 | A | | | 01/96 ▸ 04/99 | 64508372039 | **696123** |
| **CHRYSLER** | | | | | | | | | |
| **PT CRUISER (2000>2007)** | | | | | | | | | |
| 2.0 i 16V Y4B9 | E | 1996 | ECC | M | | C | 09/00 ▸ 09/04 | 5017407 | **•696365** |
| 2.0 i 16V Y4B9 | E | 1996 | ECC | A | | C | 09/00 ▸ 09/04 | 5017407 | **•696365** |

| Type Ctr. | | CC | | AC | | | OE | Valeo | |
|---|---|---|---|---|---|---|---|---|---|
| **CHRYSLER (.../...)** | | | | | | | | | |
| **GRAND VOYAGER (2004>2008)** | | | | | | | | | |
| 2.8 CRD | D | 2776 | ENR | A | | | 07/04 ▸ 01/08 | 5142995AA | **696012** |
| **VOYAGER (2004>)** | | | | | | | | | |
| 2.8 CRD | D | 2776 | ENR | A | | | 07/04 ▸ 02/08 | 5142995AA | **696012** |
| **CITROEN** | | | | | | | | | |
| **C2** | | | | | | | | | |
| 1.1 i JGH/FXB/FXC, JMH/FXB/FXC | E | 1124 | TU1A,TU1JP | M | + | | 09/03 ▸ 01/10 | 1253P8 | **696238** |
| 1.4 i,1.4 i 16V JGK/FVB, JMK/FUC/FVB FVC | E | 1360 | ET3J4,TU3A,TU3JP | M | + | | 09/03 ▸ 01/10 | 1253P8 | **696238** |
| 1.6 i 16V JGN/FUC, JMN/FSC/FUB FUC | E | 1587 | TU5JP4,TU5JP4S | M | + | | 09/03 ▸ 01/10 | 1253P8 | **696238** |
| 1.4 HDi JG8/HXB/HZC, JM8/HXB HXC/HZB/HZC | D | 1398 | DV4TD | M | + | | 09/03 ▸ 01/10 | 1253P8 | **696238** |
| 1.6 HDi 16V JM9HZC | D | 1560 | DV6TED4 | M | + | | 11/05 ▸ 01/10 | 1253P8 | **696238** |
| **C3 (2005>)** | | | | | | | | | |
| 1.4 i GNV FCKFVC | F | 1360 | TU3JP | M | + | | 11/05 ▸ 10/09 | 1253P8 | **696238** |
| 1.4 i GNV FCKFVC | F | 1360 | TU3JP | M | + | | 11/05 ▸ | 1253H6 | **696238** |
| 1.1 i FCHFXC | E | 1124 | TU1A | M | + | | 11/05 ▸ 10/09 | 1253P8 | **696238** |
| 1.1 i FCHFXC | E | 1124 | TU1A | M | + | | 11/05 ▸ | 1253H6 | **696238** |
| 1.4 i,1.4 i 16V FCK/FUC/FVB/FVC | E | 1360 | ET3J4,TU3A,TU3JP | M | + | | 11/05 ▸ 10/09 | 1253P8 | **696238** |
| 1.4 i,1.4 i 16V FCK/FUC/FVB/FVC | E | 1360 | ET3J4,TU3A,TU3JP | M | + | | 11/05 ▸ | 1253H6 | **696238** |
| 1.6 i 16V FCN/FUB/FUC | E | 1587 | TU5JP4 | M | + | | 11/05 ▸ 10/09 | 1253P8 | **696238** |
| 1.6 i 16V FCN/FUB/FUC | E | 1587 | TU5JP4 | M | + | | 11/05 ▸ | 1253H6 | **696238** |
| 1.6 i 16V FCNFUC | E | 1587 | TU5JP4 | A | + | | 12/06 ▸ 10/09 | 1253P8 | **696238** |
| 1.6 i 16V FCNFUC | E | 1587 | TU5JP4 | A | + | | 12/06 ▸ | 1253H6 | **696238** |
| 1.4 HDi FC8HZC | D | 1398 | DV4TD | M | + | | 11/05 ▸ | 1253H6 | **696238** |
| 1.4 HDi FC8HZC | D | 1398 | DV4TD | M | + | | 11/05 ▸ 10/09 | 1253P8 | **696238** |
| 1.6 HDi 16V FL9HXC, FC9/HXC/HZC | D | 1560 | DV6ATED4,DV6TED4 | M | + | | 11/05 ▸ 10/09 | 1253P8 | **696238** |
| 1.6 HDi 16V FL9HXC, FC9/HXC/HZC | D | 1560 | DV6ATED4,DV6TED4 | M | + | | 11/05 ▸ | 1253H6 | **696238** |
| **C3 PLURIEL** | | | | | | | | | |
| 1.4 i HBKFVB | E | 1360 | TU3JP | M | + | | 05/03 ▸ 01/11 | 1253P8 | **696238** |
| 1.4 i HBKFVB | E | 1360 | TU3JP | M | + | | 05/03 ▸ | 1253H6 | **696238** |
| 1.6 i 16V HBNFUB | E | 1587 | TU5JP4 | M | + | | 05/03 ▸ | 1253H6 | **696238** |
| 1.6 i 16V HBNFUB | E | 1587 | TU5JP4 | M | + | | 05/03 ▸ 01/11 | 1253P8 | **696238** |
| 1.4 HDi HB8HZB | D | 1398 | DV4TD | M | + | | 02/04 ▸ 12/05 | 1253P8 | **696238** |
| 1.4 HDi HB8HZB | D | 1398 | DV4TD | M | + | | 02/04 ▸ | 1253H6 | **696238** |
| **CX** | | | | | | | | | |
| 2.0 MAMP | E | 1995 | 829A5,J6RA600 | M | | C | 07/79 ▸ 1989 | 95606256 | |
| 2.2,2.2 GPL MAN/C/R/RBC | E | 2165 | J6TA500,M22 | M | | C | 02/75 ▸ 1989 | 95606256 | |
| 2.3,2.3 i,2.3 i Injection MAM/E/J/K/L/T/V/Y MAN/A/E | E | 2347 | M23 | M | | C | 01/76 ▸ 07/83 | 95606256 | |
| 2.5 i,2.5 i Turbo 2.5 i Turbo 2 MAN/G/GA/HH/K/KC/P | E | 2500 | M25 | M | | C | 07/83 ▸ 1989 | 95606256 | |
| 2.2 D MANG | D | 2165 | M22 | M | | C | 11/75 ▸ 06/79 | 95606256 | |
| 2.5 D,2.5 D Turbo 2.5 D Turbo 2 MAM/M/S, MAN/B/D/T/U | D | 2500 | M25 | M | | C | 02/79 ▸ 1989 | 95606256 | |
| **XANTIA (93>97)** | | | | | | | | | |
| 1.6 i X12B | E | 1580 | XU5JP | M | - | | 08/93 ▸ 12/97 | | **696211** |
| 1.8 i,1.8 i 16V X11/A/E, X13H, X14C X15C, X12/A/E/F/H, X17A, X16/C/G | E | 1761 | XU7JB,XU7JP,XU7JP4 | M | - | | 03/93 ▸ 12/97 | | **696211** |
| 1.8 i X19B | E | 1761 | XU7JP | A | - | | 09/93 ▸ 12/97 | | **696211** |
| 2.0 i X14/A/C | E | 1998 | XU10J2C | M | - | | 03/93 ▸ 06/95 | | **696211** |
| 2.0 i X15E, X17B | E | 1998 | XU10J2C | A | - | | 09/93 ▸ 12/97 | | **696211** |
| **XANTIA (97>2002)** | | | | | | | | | |
| 1.8 i GPL 16V X1LFYC, X2LFYC | F | 1761 | XU7JP4-G | M | - | | 12/97 ▸ 05/02 | | **696211** |
| 1.6 i X1BFZF | E | 1580 | XU5JP | M | - | | 12/97 ▸ 05/02 | | **696211** |
| 1.8 i,1.8 i 16V X1L/6AG/FXF/FYB/FYC FYF, X2L/FXF/FYB/FYC/FYF | E | 1761 | XU7JB,XU7JP,XU7JP4 | M | - | | 12/97 ▸ 05/02 | | **696211** |
| 1.8 i 16V X1LFYM | E | 1761 | XU7JP4 | A | - | | 12/97 ▸ 05/02 | | **696211** |
| 2.0 i X1RFXM, X2RFXM | E | 1998 | XU10J2C | A | - | | 12/97 ▸ 05/02 | | **696211** |
| **XSARA (97>2000)** | | | | | | | | | |
| 1.4 i,1.4 i GPL N0K/FXB/FXF | E | 1360 | TU3JP | M | + | | 07/97 ▸ 08/00 | | **696213** |

FXG ; N1K/FXB/FXF/FXG ; N2K/FXB/FXF

Fan System Groupe moto-ventilateur Lüftersystem Gruppo Motoventilatore Fan-systeem Fan sistemi
Grupo motorventilador Модуль вентилятора ventilátor rendszer Modul sahary Modul ventilator Σύστημα ανεμιστήρα



• **New** Nouveau **Nuevo** Novo **Nuovo** Nieuw **Neu** Nowość **Yeni** Новый Νέο **Novy**

| | | | | | | | | | | | |
|---|---|---|---|---|---|---|---|---|---|---|---|
| | | | CC | | | AC | | | OE | Valeo | |
| **CITROEN (.../...)** | | | | | | | | | | | |
| **XSARA (97>2000) (.../...)** | | | | | | | | | | | |
| 1.6 i | N0N/FZF ; N2NFZF ; N1N/FZF/FZG | E | 1587 | TU5JP | M | + | | 07/97 ▸ 08/00 | | 696213 | |
| 1.6 i | N1NFZ | E | 1587 | TU5JP | A | + | | 05/99 ▸ 08/00 | | 696213 | |
| **ZX** | | | | | | | | | | | |
| 1.8 i 16V | N2K7 | E | 1761 | XU7JP4 | M | + | | 03/97 ▸ 07/98 | | 696213 | |
| 1.8 D | N2C2/T | D | 1769 | XUD7 | M | - | | 09/92 ▸ 07/98 | | 696212 | |
| 1.9 D | N2C/3/4/4/T/6 ; N2E9 ; N2D/5/5/T/8 ; N2H/8/8 T/9 ; N2J/1/1/T | D | 1905 | XUD9,XUD9A | M | - | | 09/92 ▸ 07/98 | | 696212 | |
| 1.9 D | N2H5 ; N2C/3A ; N2L/5/6 | D | 1905 | XUD9A | A | - | | 09/92 ▸ 07/98 | | 696212 | |
| **CITROEN** | | | | | | | | | | | |
| **BERLINGO (96>2002)** | | | | | | | | | | | |
| 1.9 D | MCWJYB ; MFWJYB ; MBW/JYB/JYP | D | 1868 | DW8B | M | + | | 09/00 ▸ 12/02 | | 696214 | |
| 2.0 HDi | MBR/HYB ; MCR/HYB HYF ; MFR/HYB/HYF | D | 1997 | DW10TD | M | + | | 10/99 ▸ 12/02 | | 696214 | |
| **JUMPER (94>2001)** | | | | | | | | | | | |
| 2.0,2.0 i | 231/A22/A32/B22/B24 C22/C24/G22/G32/V22/V24, 232/B22/F22/G22/J12 J22/K22/L22/N22/V22/V24, 321A34, 233/B22/D22 F22/G22/H22/J22/K22/L22/N22 | E | 1998 | XU102CU,XU10J2U | M | +/- | | 02/94 ▸ 12/01 | | 696101 | |
| 2.0,2.0 i | 231/A22/A24/B12/B22 C22/C24/G22/H22/H32/V22/V24, 232/B22/F22/G22 H22/J22/K22/L22/V22/V24, 233/B22/F22/G22/H22 J22/K22/L22 | E | 1998 | XU102CU,XU10J2U | M | - | | 02/94 ▸ 12/01 | | 696101 | |
| 1.9 D,1.9 TD | 231/A32/A62/A72/A74 A82/A84/B72/B74/B82/B84/C32/C62/C72/C82/E72 G62/G72/G82/H62/H72/H82/V62/V72/V82, 232/B72 B82/C32/C62/C72/C82/G72/G82/H72/H82/V82 | D | 1905 | XUD9A,XUD9AU,XUD9TEF,XUD9UTF | M | - | | 02/94 ▸ 12/01 | | 696101 | |
| 2.5 TDi | 231/B42/B44/C42/C44 G42/H42/J42/V42/V44, 232/B42/B44/F42/G42/H42 H44/J42/J44/K42/K44/L42/N42/N44/V42/V44, 233 B42/B44/G42/H42/J42/J44/K42/K44/L42/N42/N44 | D | 2446 | DJ5TED | M | - | | 07/96 ▸ 12/01 | | 696101 | |
| 2.8 D,2.8 TD | 232 | D | 2798 | 8140-43,8140-63 | M | - | | 06/99 ▸ 12/01 | | 696101 | |
| **JUMPER (2002>2006)** | | | | | | | | | | | |
| 2.0 i | | F | 1998 | XU10J2U | M | - | | 01/02 ▸ 06/06 | | 696101 | |
| 2.0 i | ZAT/MF, ZBT/MF/MP, ZCT/MF/MM | E | 1998 | XU10J2U | M | - | | 01/02 ▸ 06/06 | | 696101 | |
| **DAEWOO** | | | | | | | | | | | |
| **NUBIRA (97>99)** | | | | | | | | | | | |
| 1.6 i 16V | JF356E, JF696E JF486E | E | 1598 | A16DMS | M | + | | 09/97 ▸ 05/99 | 96181888 | | |
| 1.6 i 16V | JA356E, JA486E JA696E | E | 1598 | A16DMS | A | + | | 09/97 ▸ 05/99 | 96181888 | | |
| 2.0 i 16V,2.0 i 8V | JF69ZE, JF48WE JF69WE, JF35ZE, JF48ZE, JF35WE | E | 1998 | DTEC20,X20S | M | + | | 09/97 ▸ 05/99 | 96181888 | | |
| 2.0 i 16V,2.0 i 8V | JF48ZE, JF35ZE JF69WE, JF35WE, JF48WE, JF69ZE | E | 1998 | DTEC20,X20S | M | | C | 06/98 ▸ 05/99 | 96351331 | | |
| 2.0 i 16V | JA69ZE, JA35ZE JA48ZE | E | 1998 | DTEC20 | A | - | C | 09/97 ▸ 05/99 | 96351331 | | |
| **FIAT** | | | | | | | | | | | |
| **NUOVA 500 (150)** | | | | | | | | | | | |
| 1.2 MPi | 312AXA1 | E | 1242 | 169A4.000 | M | - | | 07/07 ▸ | 51799360 | | |
| 1.2 MPi | 312AXA1 | E | 1242 | 169A4.000 | M | | | 07/07 ▸ | 51787116 | | |
| 1.4 MPi 16V | 312AXC1 | E | 1368 | 169A3.000 | M | - | | 07/07 ▸ | 51785397 | | |
| 1.4 MPi 16V | 312AXC1 | E | 1368 | 169A3.000 | M | | | 07/07 ▸ | 51787116 | | |
| 1.3 MJTD 16V | 312AXB1 | D | 1248 | 169A1.000 | M | - | | 07/07 ▸ | 51785397 | | |
| 1.3 MJTD 16V | 312AXB1 | D | 1248 | 169A1.000 | M | | | 07/07 ▸ | 51787116 | | |
| **ALBEA** | | | | | | | | | | | |
| 1.2 i,1.2 i 16V | 178/CYA1/CYE1 | E | 1242 | 188A4.000,188A5.000 | M | + | | 04/02 ▸ | 46792196 | | |
| 1.2 i,1.2 i 16V | 178/CYA1/CYE1 | E | 1242 | 188A4.000,188A5.000 | M | - | | 04/02 ▸ | 46792221 | | |

# FIAT (.../...)

## ALBEA (.../...)

| | | | CC | | AC | | | | OE | Valeo | |
|---|---|---|---|---|---|---|---|---|---|---|---|
| 1.2 i 16V | 178CYE1 | E | 1242 | 188A5.000 | A | + | | 04/02 ▸ | 46792196 | | |
| 1.2 i 16V | 178CYE1 | E | 1242 | 188A5.000 | A | - | | 04/02 ▸ | 46792221 | | |
| 1.6 i 16V | 178CYC1 | E | 1596 | 182B6.000 | M | + | | 04/02 ▸ | 46792196 | | |
| 1.6 i 16V | 178CYC1 | E | 1596 | 182B6.000 | M | - | | 04/02 ▸ | 46792221 | | |

## BRAVA

| | | | CC | | AC | | | | OE | Valeo | |
|---|---|---|---|---|---|---|---|---|---|---|---|
| 1.2 i 16V | 182/BP1A/BT1A | E | 1242 | 182B2.000,188A5.000 | M | + | C | 10/98 ▸ 03/02 | 46550400 | **696098** | |
| 1.2 i 16V | 182/BP1A/BT1A | E | 1242 | 182B2.000,188A5.000 | M | - | C | 10/98 ▸ 03/02 | 46744926 | | |
| 1.4 i 12V | 182/BA1A/BG1A | E | 1372 | 182A3.000,182A5.000 | M | + | C | 06/95 ▸ 10/96 | 7787852 | | |
| 1.4 i 12V | 182BG1A | E | 1372 | 182A5.000 | M | + | | 06/95 ▸ 09/98 | 46550400 | **696098** | |
| 1.4 i 12V | 182/BA1A/BG1A | E | 1372 | 182A3.000,182A5.000 | M | + | C | 10/96 ▸ 09/98 | 46430980 | | |
| 1.4 i 12V | 182/BA1A/BG1A | E | 1372 | 182A3.000,182A5.000 | M | + | | 10/96 ▸ 09/98 | 46650400 | **696098** | |
| 4300174 ▸ | | | | | | | | | | | |
| 1.4 i 12V | 182/BA1A/BG1A | E | 1372 | 182A3.000,182A5.000 | M | - | C | 06/95 ▸ 09/98 | 46744926 | | |
| 1.6 i 16V | 182/BB1A/BH1A | E | 1581 | 182A4.000,182A6.000 | M | + | C | ▸ 03/02 | 46550400 | **696098** | |
| 4690686 ▸ | | | | | | | | | | | |
| 1.6 i 16V | 182/BB1A/BH1A | E | 1581 | 182A4.000,182A6.000 | M | + | | 06/95 ▸ 09/98 | 46650400 | **696098** | |
| 1.6 i 16V | 182/BB1A/BH1A | E | 1581 | 182A4.000,182A6.000 | M | - | C | 06/95 ▸ 03/02 | 46744926 | | |
| 1.6 i 16V | 182/BB11/BB1A | E | 1581 | 182A4.000 | A | + | C | ▸ 03/02 | 46550400 | **696098** | |
| 4690686 ▸ | | | | | | | | | | | |
| 1.6 i 16V | 182BB1A | E | 1581 | 182A4.000 | A | + | | 10/96 ▸ 09/98 | 46650400 | **696098** | |
| 1.6 i 16V | 182BB1A | E | 1581 | 182A4.000 | A | - | C | 10/96 ▸ 09/98 | 46744928 | | |
| 1.6 i 16V | 182BB11 | E | 1581 | 182A4.000 | A | - | C | 10/98 ▸ 03/02 | 46744926 | | |
| 1.6 i 16V | 182/BB1A/BH1A | E | 1581 | 182A4.000,182A6.000 | M | + | C | 06/95 ▸ | 46430980 | | |
| ▸ 4690686 | | | | | | | | | | | |
| 1.6 i 16V | 182BB1A | E | 1581 | 182A4.000 | A | + | C | 10/96 ▸ | 46430980 | | |
| ▸ 4690686 | | | | | | | | | | | |
| 1.6 i 16V | 182BU1A | E | 1596 | 182B6.000 | M | + | C | 10/98 ▸ 03/02 | 46550400 | **696098** | |
| 1.6 i 16V | 182BU1A | E | 1596 | 182B6.000 | M | - | C | 10/98 ▸ 03/02 | 46744926 | | |
| 1.8 i 16V | 182BC1A | E | 1747 | 182A2.000 | M | - | | 02/97 ▸ 03/02 | 46744928 | | |
| 4308892 ▸ | | | | | | | | | | | |
| 1.8 i 16V | 182BC1A | E | 1747 | 182A2.000 | M | | C | 02/97 ▸ 09/98 | 7762665 | | |

## BRAVO (95>98)

| | | | CC | | AC | | | | OE | Valeo | |
|---|---|---|---|---|---|---|---|---|---|---|---|
| 1.4 i 12V | 182/AA1A/AGIA | E | 1372 | 182A3.000,182A5.000 | M | + | C | 06/95 ▸ 11/96 | 7787852 | | |
| 1.4 i 12V | 182/AA1A/AGIA | E | 1372 | 182A3.000,182A5.000 | M | + | C | 11/96 ▸ 09/98 | 46539871 | | |
| 1.4 i 12V | 182/AA1A/AGIA | E | 1372 | 182A3.000,182A5.000 | M | + | | 11/96 ▸ 09/98 | 46650400 | **696098** | |
| 1.4 i 12V | 182/AA1A/AGIA | E | 1372 | 182A3.000,182A5.000 | M | - | C | 06/95 ▸ 09/98 | 46744926 | | |
| 1.6 i 16V | 182/AB1A/ABIA/AHIA | E | 1581 | 182A4.000,182A6.000 | M | + | | 06/95 ▸ 04/98 | 46650400 | **696098** | |
| 1.6 i 16V | 182/AB1A/ABIA/AHIA | E | 1581 | 182A4.000,182A6.000 | M | + | C | 06/95 ▸ 04/98 | 46539871 | | |
| 1.6 i 16V | 182/AB1A/ABIA/AHIA | E | 1581 | 182A4.000,182A6.000 | M | + | C | 04/98 ▸ 09/98 | 46550400 | **696098** | |
| 1.6 i 16V | 182/AB1A/ABIA/AHIA | E | 1581 | 182A4.000,182A6.000 | M | - | C | 06/95 ▸ 09/98 | 46744926 | | |
| 1.6 i 16V | 182AB11 | E | 1581 | 182A4.000 | A | + | C | 10/96 ▸ 04/98 | 46539871 | | |
| 1.6 i 16V | 182AB11 | E | 1581 | 182A4.000 | A | + | | 10/96 ▸ 04/98 | 46650400 | **696098** | |
| 1.6 i 16V | 182AB11 | E | 1581 | 182A4.000 | A | + | C | 04/98 ▸ 09/98 | 46550400 | **696098** | |
| 1.6 i 16V | 182AB11 | E | 1581 | 182A4.000 | A | - | C | 10/96 ▸ 09/98 | 46744928 | | |
| 1.8 i 16V | 182/AC1A/AC1B | E | 1747 | 182A2.000 | M | - | | 02/96 ▸ 09/98 | 46744928 | | |
| 1.8 i 16V | 182/AC1A/AC1B | E | 1747 | 182A2.000 | M | | C | 02/97 ▸ 09/98 | 7762665 | | |

## BRAVO (98>2006)

| | | | CC | | AC | | | | OE | Valeo | |
|---|---|---|---|---|---|---|---|---|---|---|---|
| 1.2 i 16V | 182/AP1A/AT1A | E | 1242 | 182B2.000,188A5.000 | M | + | C | 10/98 ▸ 03/02 | 46550400 | **696098** | |
| 1.2 i 16V | 182/AP1A/AT1A | E | 1242 | 182B2.000,188A5.000 | M | - | C | 10/98 ▸ 03/02 | 46744926 | | |
| 1.6 i 16V | 182AB1A | E | 1581 | 182A4.000 | M | + | C | 10/98 ▸ 03/02 | 46550400 | **696098** | |
| 1.6 i 16V | 182AB1A | E | 1581 | 182A4.000 | M | - | C | 10/98 ▸ 03/02 | 46744926 | | |
| 1.6 i 16V | 182AB11 | E | 1581 | 182A4.000 | A | + | C | 10/98 ▸ 03/02 | 46550400 | **696098** | |
| 1.6 i 16V | 182AB11 | E | 1581 | 182A4.000 | A | - | C | 10/98 ▸ 03/02 | 46744926 | | |
| 1.6 i 16V | 182AU1A | E | 1596 | 182B6.000 | M | + | C | 10/98 ▸ 03/02 | 46550400 | **696098** | |
| 1.6 i 16V | 182AU1A | E | 1596 | 182B6.000 | M | - | C | 10/98 ▸ 03/02 | 46744926 | | |
| 1.8 i 16V | 182/AC1A/AC1B | E | 1747 | 182A2.000 | M | - | C | 10/98 ▸ 03/02 | 46744928 | | |

## CINQUECENTO

| | | | CC | | AC | | | | OE | Valeo | |
|---|---|---|---|---|---|---|---|---|---|---|---|
| 900,900 i | 170/AF53/AG53/BF53 CF53/CF5C | E | 899 | 1170A1.000,1170A1.046 1170A1.046F | M | + | | 01/92 ▸ 02/98 | 46534674 | **696100** | |

## CROMA II (2005>2007)

| | | | CC | | AC | | | | OE | Valeo | |
|---|---|---|---|---|---|---|---|---|---|---|---|
| 1.8 i 16V | 194AXG1 | E | 1796 | 939A4.000 | M | | | 06/05 ▸ 10/07 | 51792329 | **696335** | |
| 2.2 i 16V | 194AXA1 | E | 2198 | 194A1.000 | M | + | | 06/05 ▸ 10/07 | 51770406 | **696020** | |
| 2.2 i 16V | 194AXA1 | E | 2198 | 194A1.000 | A | + | | 06/05 ▸ 10/07 | 51770406 | **696020** | |
| 1.9 JTD Multijet 16V | 194AXC1 | D | 1910 | 939A2.000 | M | + | | 06/05 ▸ 10/07 | 51770418 | **696022** | |
| 1.9 JTD | 194AXB1 | D | 1910 | 939A1.000 | M | + | | 06/05 ▸ 10/07 | 51770412 | **696023** | |

Fan System Groupe moto-ventilateur Lüftersystem Gruppo Motoventilatore Fan-systeem Fan sistemi
Grupo motorventilador Модуль вентилятора ventilátor rendszer Modul sahary Modul ventilator Σύστημα ανεμιστήρα



• **New** Nouveau **Nuevo** Novo **Nuovo** Nieuw **Neu** Nowość **Yeni** Новый Νέο **Novy**

# FIAT (.../...)

## CROMA II (2005>2007) (.../...)

| | | | CC | | | AC | | | OE | Valeo | |
|---|---|---|---|---|---|---|---|---|---|---|---|
| 1.9 JTD | 194/AXE1/BXB1 | D | 1910 | 939A1.000,939A7.000 | M | | | 06/05 ▸ 10/07 | 51770412 | 696023 | |
| 1.9 JTD,1.9 JTD 16V | 194/AXF1/BXC1 | D | 1910 | 939A2.000,939A8.000 | M | | | 06/05 ▸ 10/07 | 51770418 | 696022 | |
| 1.9 JTD,1.9 JTD 16V<br>1.9 JTD Multijet 16V | 194/AXC1/AXF1/BXC1 | D | 1910 | 939A2.000,939A8.000 | A | | | 06/05 ▸ 10/07 | 51791385 | | |
| 2.4 JTD Multijet 20V | 194AXD1 | D | 2387 | 939A3.000/F | A | + | | 06/05 ▸ 10/07 | 71740487 | 696085 | |

## CROMA II (2007>)

| | | | | | | | | | | | |
|---|---|---|---|---|---|---|---|---|---|---|---|
| 1.8 MPi 16V | 194AXG1 | E | 1796 | 939A4.000 | M | +/- | | 10/07 ▸ 01/11 | 51792329 | 696335 | |
| 2.2 MPi 16V | 194AXA1 | E | 2198 | 194A1.000 | M | +/- | | 10/07 ▸ 01/11 | 51770406 | 696020 | |
| 2.2 MPi 16V | 194AXA1 | E | 2198 | 194A1.000 | A | +/- | | 10/07 ▸ 01/11 | 51770406 | 696020 | |
| 1.9 JTD | 194AXB1 | D | 1910 | 939A1.000 | M | +/- | | 10/07 ▸ 01/11 | 51770412 | 696023 | |
| 1.9 JTD 16V | 194AXC1 | D | 1910 | 939A2.000,939A2.000/F | M | +/- | | 10/07 ▸ 01/11 | 51770418 | 696022 | |
| 1.9 JTD 16V | 194AXC1 | D | 1910 | 939A2.000,939A2.000/F | A | +/- | | 10/07 ▸ 01/11 | 51791385 | | |
| 2.4 JTD 20V | 194AXD1 | D | 2387 | 939A3.000/F | A | +/- | | 10/07 ▸ 01/11 | 71740487 | 696085 | |

## GRANDE PUNTO (2005>2008)

| | | | | | | | | | | | |
|---|---|---|---|---|---|---|---|---|---|---|---|
| 1.3 MJTD 16V | 199/AXC1/BXC1/DXC1 | D | 1248 | 199A3.000,199A9.000 | M | + | | 10/05 ▸ 01/08 | 55700342 | | |
| 1.3 MJTD 16V | 199/AXC1/AXD1/BXC1<br>BXD1/DXC1 | D | 1248 | 199A3.000,199A9.000 | M | - | | 10/05 ▸ 01/08 | 55701372 | | |
| 1.3 MJTD 16V | 199/AXC1/AXD1/BXC1<br>BXD1/DXC1 | D | 1248 | 199A3.000,199A9.000 | M | | | 10/05 ▸ 01/08 | 55700342 | | |

## IDEA (2003>2007)

| | | | | | | | | | | | |
|---|---|---|---|---|---|---|---|---|---|---|---|
| 1.2 i 16V | 350AXD1 | E | 1242 | 188A5.000 | M | + | | 02/04 ▸ 06/07 | 51738360 | 696104 | |
| 1.2 i 16V | 350AXD1 | E | 1242 | 188A5.000 | M | - | | 02/04 ▸ 06/07 | 51738357 | 696106 | |
| 1.4 i 16V | 350/AXA1/AXE1 | E | 1368 | 192B2.000,843A1.000 | M | + | | 10/03 ▸ 06/07 | 51738688 | | |
| 1.4 i 16V | 350AXA1 | E | 1368 | 843A1.000 | M | + | | 10/03 ▸ | 46834077 | | |
| 1.4 i 16V | 350AXA1 | E | 1368 | 843A1.000 | M | - | | 10/03 ▸ | 51721477 | 696106 | |
| 1.4 i 16V | 350AXA1 | E | 1368 | 843A1.000 | M | - | | 10/03 ▸ 06/07 | 51738357 | 696106 | |
| 1.4 i 16V | 350AXE1 | E | 1368 | 192B2.000 | M | | | 10/03 ▸ 06/07 | 51738357 | 696106 | |
| 1.3 JTD Multijet 16V | 350AXB1 | D | 1248 | 188A9.000 | M | | | 10/03 ▸ 06/07 | 51760613 | | |
| 1.3 JTD Multijet 16V | 350AXB1 | D | 1248 | 188A9.000 | M | | | 10/03 ▸ | 51708004 | | |
| 1.9 JTD | 350AXC1 | D | 1910 | 188B2.000 | M | +/- | | 02/04 ▸ 06/07 | 51752062 | | |

## MAREA

| | | | | | | | | | | | |
|---|---|---|---|---|---|---|---|---|---|---|---|
| 1.2 i 16V | 185/AXP1/BXP1 | E | 1242 | 182B2.000 | M | + | C | 02/99 ▸ 09/02 | 46550400 | 696098 | |
| 1.2 i 16V | 185/AXP1/BXP1 | E | 1242 | 182B2.000 | M | - | C | 02/99 ▸ 09/02 | 46744926 | | |
| 1.4 i 12V | 185/AXA/BXA | E | 1372 | 182A3.000 | M | - | | 07/96 ▸ 01/99 | 46744926 | | |
| 1.6 i 16V | 185/AXB/AXB1/BXB<br>BXB1 | E | 1581 | 182A4.000 | M | + | | 07/96 ▸ 03/00 | 46550400 | 696098 | |
| 1.6 i 16V | 185/AXB/BXB | E | 1581 | 182A4.000 | M | - | | 07/96 ▸ 01/99 | 46515058 | | |
| 1.6 i 16V | 185/AXB/AXB1/BXB | E | 1581 | 182A4.000 | A | + | | 09/96 ▸ 03/00 | 46550400 | 696098 | |
| 1.6 i 16V | 185/AXB/BXB | E | 1581 | 182A4.000 | A | - | | 09/96 ▸ 01/99 | 46515058 | | |
| 1.6 i 16V | 185/AXR1/BXR1 | E | 1596 | 182B6.000 | M | + | | 02/99 ▸ 05/00 | 46550400 | 696098 | |
| 1.6 i 16V | 185/AXR1/BXR1 | E | 1596 | 182B6.000 | A | + | | 02/99 ▸ 05/00 | 46550400 | 696098 | |
| 1.8 i 16V | 185/AXC/AXC1/BXC<br>BXC1 | E | 1747 | 182A2.000 | M | - | | ▸ 09/02 | 46744928 | | |

## MULTIPLA (98>2003)

| | | | | | | | | | | | |
|---|---|---|---|---|---|---|---|---|---|---|---|
| 1.6 i 16V<br>1.6 i Bipower 16V<br>1.6 i Blupower 16V | 186/AMA1/AMB1/AXA1 | E | 1581 | 182A4.000,186A3.000,186A4.000 | M | + | C | 11/98 ▸ 06/04 | 46550400 | 696098 | |
| 1.6 i 16V<br>1.6 i Bipower 16V<br>1.6 i Blupower 16V | 186/AMA1/AMB1/AXA1 | E | 1581 | 182A4.000,186A3.000,186A4.000 | M | - | C | 11/98 ▸ 06/04 | 46744926 | | |
| 1.6 i 16V<br>1.6 i Bipower 16V | 186/AGB1/AXC1 | E | 1596 | 182B6.000 | M | + | | 11/98 ▸ 06/04 | 46550400 | 696098 | |
| 1.6 i 16V<br>1.6 i Bipower 16V | 186/AGB1/AXC1 | E | 1596 | 182B6.000 | M | - | | 11/98 ▸ 06/04 | 46744926 | | |

## PALIO

| | | | | | | | | | | | |
|---|---|---|---|---|---|---|---|---|---|---|---|
| 1.1 | 178BXM1 | E | 1108 | 178B9.033 | M | | | 09/98 ▸ 02/01 | 46449098 | | |
| 1.2 i | 178/AXU1/BXU1/DXG1 | E | 1242 | 178B5.000,178B7.045 | M | + | | 09/97 ▸ 02/01 | 46473281 | | |
| 1.2 i,1.2 i 16V | 178/DYA/DYA1/DYE<br>DYE1 | E | 1242 | 188A4.000,188A5.000 | M | + | | 03/01 ▸ 09/02 | 46792196 | | |
| 1.2 i | 178/AXU1/BXU1/DXG1 | E | 1242 | 178B5.000,178B7.045 | M | - | | 09/97 ▸ 02/01 | 46471862 | | |
| 1.2 i,1.2 i 16V | 178/DYA/DYA1/DYE<br>DYE1 | E | 1242 | 188A4.000,188A5.000 | M | - | | 03/01 ▸ 09/02 | 46792221 | | |
| 1.4 i | 178/BXC1/BXP1 | E | 1372 | 178B2.000,178B2.016 | M | + | C | 06/99 ▸ 02/01 | 46449101 | | |
| 1.4 i | 178/BXC1/BXP1 | E | 1372 | 178B2.000,178B2.016 | M | - | C | 06/99 ▸ 02/01 | 46449133 | | |

# FIAT (.../...)

## PALIO (.../...)

| | | | CC | | | AC | | | OE | Valeo | |
|---|---|---|---|---|---|---|---|---|---|---|---|
| 1.6 i | 178/AXV1/DXV1 | E | 1580 | 178D2.011 | M | + | | 06/99 ▸ 02/01 | 46449101 | | |
| 1.6 i | 178/AXV1/DXV1 | E | 1580 | 178D2.011 | M | - | | 06/99 ▸ 02/01 | 46449133 | | |
| 1.6 i 16V | 178/BXD1/DXD1 | E | 1581 | 178B3.000 | M | + | | 09/97 ▸ 02/01 | 46449101 | | |
| 1.6 i 16V | 178/BXD1/DXD1 | E | 1581 | 178B3.000 | M | - | | 09/97 ▸ 02/01 | 46449133 | | |
| 1.6 i 16V | 178DYC1 | E | 1596 | 182B6.000 | M | + | | 09/97 ▸ 02/01 | 46449101 | | |
| 1.6 i 16V | 178BYC1 | E | 1596 | 182B6.000 | M | + | | 03/01 ▸ 09/02 | 46792196 | | |
| 1.6 i 16V | 178/DYC/DYC1 | E | 1596 | 182B6.000 | M | + | | 03/01 ▸ | 46794466 | | |
| 1.6 i 16V | 178DYC1 | E | 1596 | 182B6.000 | M | - | | 09/97 ▸ 02/01 | 46449133 | | |
| 1.6 i 16V | 178BYC1 | E | 1596 | 182B6.000 | M | - | | 03/01 ▸ 09/02 | 46792221 | | |
| 1.6 i 16V | 178/DYC/DYC1 | E | 1596 | 182B6.000 | M | - | | 03/01 ▸ 09/02 | 46814699 | | |
| 1.7 D,1.7 TD | 178/BXN1/DXB1 | D | 1697 | 176B3.000,176B7.000 | M | +/- | C | 09/98 ▸ 02/01 | 46453396 | | |
| 1.7 TD | 178DXH1 | D | 1697 | 176A3.000 | M | + | | 09/97 ▸ 02/01 | 46480350 | | |
| 1.7 TD | 178DXH1 | D | 1697 | 176A3.000 | M | - | | 09/97 ▸ 02/01 | 46449101 | | |

## PANDA

| | | | | | | | | | | | |
|---|---|---|---|---|---|---|---|---|---|---|---|
| 750 | 11A/14AC/A4AC/A4CT, 141/AA43/AA4C/AA53/AI43 AI53/AM43/AM53 | E | 769 | 141B.000,156A4.000,156A4.048 | M | | | 03/86 ▸ 12/92 | 46542852 | **696095** | |
| 900 ie | 141/AT53/GT53/GT5F | E | 899 | 1170A1.046,1170A1.046F | M | | | 10/89 ▸ 08/03 | 46542852 | **696095** | |
| 900 | 141/AL43/AL53 | E | 903 | 146A.048 | M | | | 06/89 ▸ 03/92 | 46542852 | **696095** | |
| 1000,1000 ie | 11A/E5B8, 141/AE53 AE5B/AJ53/AO53 | E | 999 | 141C2.000,156A2.246,156A3.000 | M | | | 03/86 ▸ 08/03 | 46542854 | **696095** | |
| 1000,1000 ie | 11A/B5AC/B5CT/B8AC B8CT, 151AE53, 141/AB43/AB53/AB83/AF43/AF53 AO43/AO53 | E | 999 | 156A2.000,156A2.100,156A2.246 | M | | | 03/86 ▸ 08/03 | 46542852 | **696095** | |
| 1000 | 141AB13 | E | 999 | 156A2.000 | A | | | 1990 ▸ 12/92 | 46542852 | **696095** | |
| 1100 ie | 141AS53 | E | 1108 | 156C.046 | M | | | 06/89 ▸ 08/03 | 46542854 | **696095** | |
| 1100 ie | 141AS53 | E | 1108 | 156C.046 | M | | | 06/89 ▸ 02/91 | 46542852 | **696095** | |
| 1100 ie | 141/AK53/MK53 | E | 1108 | 176B2.000 | M | | | 07/92 ▸ 08/03 | 46542856 | | |
| 1100 ie | 141AS13 | E | 1108 | 156C.046 | A | | | 10/90 ▸ 02/91 | 46542852 | **696095** | |
| 1100 ie | 141AS13 | E | 1108 | 156C.046 | A | | | 04/91 ▸ 08/03 | 46542854 | **696095** | |
| 1100 ie | 141AK13 | E | 1108 | 176B2.000 | A | | | 07/92 ▸ 08/03 | 46542856 | | |
| 1300 D | 141AD53 | D | 1301 | 156A5.000 | M | | | 04/86 ▸ 02/91 | 46542854 | **696095** | |

## PANDA (2003>2009)

| | | | | | | | | | | | |
|---|---|---|---|---|---|---|---|---|---|---|---|
| 1.1 i | 169/AXA1/CXA1 | E | 1108 | 187A1.000 | M | + | | 09/03 ▸ 04/08 | 51732069 | **698788** | |
| 1.1 i | 169/AXA1/CXA1 | E | 1108 | 187A1.000 | M | - | | 09/03 ▸ 04/08 | 46799410 | **698786** | |
| 1.2 i | 169/AXB1/AXB2/CXB1 | E | 1242 | 188A4.000 | M | + | | 09/03 ▸ | 51732069 | **698788** | |
| 1.2 i | 169/AXB1/AXB2/CXB1 | E | 1242 | 188A4.000 | M | - | | 09/03 ▸ | 46799410 | **698786** | |
| 1.3 JTD Multijet 16V | 169/AXC1/AXC2/CXC1 | D | 1248 | 188A9.000 | M | + | | 09/03 ▸ | 51732070 | | |
| 1.3 JTD Multijet 16V | 169/AXC1/AXC2/CXC1 | D | 1248 | 188A9.000 | M | - | | 09/03 ▸ | 46825768 | | |

## PUNTO (93>99)

| | | | | | | | | | | | |
|---|---|---|---|---|---|---|---|---|---|---|---|
| 55 S | 176AH53 | E | 1108 | 176A6.000 | M | +/- | C | 07/93 ▸ 04/97 | 7740875 | | |
| 55 ED,55 EL,55 EL 6 speed 55 S,55 SX,55 SX 6 speed | 176/AA53/AA55/AA5C AA63/AQ/AQ53/AQ55 AQ63 | E | 1108 | 176A6.000,176B2.000 | M | - | C | 07/93 ▸ 09/99 | 7741200 | **698179** | |
| 55 ED,55 EL 6 speed,55 S 55 SX,55 SX 6 speed | 176/AQ/AQ53/AQ55 AQ63 | E | 1108 | 176B2.000 | M | - | | 09/96 ▸ 09/99 | 46465018 | **698178** | |
| 60 Opera,60 S,60 SX 60 Star,75 ELX,75 HSD 75 SX | 176/AC53/AC55/AR53 AR55/AR5F/BR52 | E | 1242 | 176A8.000,176B4.000 | M | + | | ▸ 09/99 | 46559315 | | |
| 60 Opera,60 S,60 SX 60 Star,75 ELX,75 HSD 75 SX | 176/AC53/AC55/AR53 AR55/AR5F/BR52 | E | 1242 | 176A8.000,176B4.000 | M | + | | 07/93 ▸ 04/97 | 46559314 | | |
| 60 Opera,60 S,60 SX 60 Star,75 ELX,75 HSD 75 SX,85 ELX,85 Sporting | 176/AB52/AC53/AC55 AR53/AR55/AR5F/AV52 AV53/AV55/BB52/BR52 BV53 | E | 1242 | 176A7.000,176A8.000,176B4.000 176B9.000 | M | + | C | 07/93 ▸ 09/99 | 46550716 | | |
| 60 Opera,60 S,60 SX 60 Star,75 ELX,75 HSD 75 SX,85 ELX,85 Sporting | 176/AB52/AC53/AC55 AR53/AR55/AV52/AV53 AV55/BB52/BB53/BB55 BB5F/BR52/BV53 | E | 1242 | 176A7.000,176A8.000,176B4.000 176B9.000 | M | - | | 07/93 ▸ 09/99 | 7741201 | **698178** | |
| 60 Opera,60 S,60 SX 60 Star | 176/AR53/AR55/AR5F BR52 | E | 1242 | 176B4.000 | M | - | | 06/95 ▸ 09/96 | 7741200 | **698179** | |
| 60 Opera,60 S,60 SX 60 Star,75 ELX,75 HSD 75 SX | 176/AC53/AC55/AR53 AR55/AR5F/BR52 | E | 1242 | 176A8.000,176B4.000 | M | - | | 09/96 ▸ 09/99 | 46465018 | **698178** | |
| 60 Opera,60 S,60 SX 60 Star | 176/AR53/AR55/AR5F BR52 | E | 1242 | 176B4.000 | M | - | | 04/97 ▸ 09/99 | 46541535 | **698178** | |
| 75 ELX,75 HSD,75 SX | 176/AC53/AC55 | E | 1242 | 176A8.000 | M | - | | 01/98 ▸ 09/99 | 46546084 | | |

Fan System Groupe moto-ventilateur Lüftersystem Gruppo Motoventilatore Fan-systeem Fan sistemi
Grupo motorventilador Модуль вентилятора ventilátor rendszer Modul sahary Modul ventilator Σύστημα ανεμιστήρα



• **New** Nouveau **Nuevo** Novo **Nuovo** Nieuw **Neu** Nowość **Yeni** Новый Νέο **Novy**

## PUNTO (93>99) (.../...)

| | | | CC | | | AC | | | OE | Valeo |
|---|---|---|---|---|---|---|---|---|---|---|
| 60 Star | 176AR5F | E | 1242 | 176B4.000 | M | | C | 06/95 ▸ 09/99 | 7741201 | 698178 |
| 60 ELX,60 SX | 176/AR12/AR13/AR15 | E | 1242 | 176B4.000 | A | + | C | 06/95 ▸ 09/99 | 46550716 | |
| 60 SX | 176/AP13/AP15/AR13/AR15 | E | 1242 | 176B1.000,176B4.000 | A | - | | 05/94 ▸ 04/97 | 7741200 | 698179 |
| 60 ELX,60 SX | 176/AP13/AP15/AR12 AR13/AR15 | E | 1242 | 176B1.000,176B4.000 | A | - | C | 05/94 ▸ 09/99 | 7741201 | 698178 |
| 60 ELX,60 SX | 176/AP13/AP15/AR12 AR13/AR15 | E | 1242 | 176B1.000,176B4.000 | A | - | | 09/96 ▸ 04/97 | 46465018 | 698178 |
| 60 ELX,60 SX | 176/AR12/AR13/AR15 | E | 1242 | 176B4.000 | A | - | | 04/97 ▸ 09/99 | 46541535 | 698178 |
| GT | 176/AD53/AS53 | E | 1372 | 176A4.000,176B6.000 | M | +/- | C | 07/93 ▸ 09/99 | 7740875 | |
| 90 ELX,ELX | 176/AL52/BL52/BL53 BL55 | E | 1581 | 176A9.000 | M | + | C | 11/93 ▸ 04/97 | 46550716 | |
| 90 ELX,ELX | 176/AL52/BL52/BL53 BL55 | E | 1581 | 176A9.000 | M | + | | 11/93 ▸ 04/97 | 46559314 | |
| 90 ELX,ELX | 176/AL52/BL52/BL53 BL55 | E | 1581 | 176A9.000 | M | - | C | 11/93 ▸ 04/97 | 7741201 | 698178 |
| 60 Diva,60 S,60 SX,70 ELX 70 SX,ELX,S,SX | 176/AF/AF53/AF55 AF5C/AF5F/AG53/AI53 AI55/AT/AT53/AT55/CG/CG53/CG55 | D | 1697 | 176A3.000,176A3.000F 176A5.000,176B3.000,176B7.000 | M | + | C | 07/93 ▸ 09/99 | 46551065 | |
| 60 Diva,60 S,60 SX,70 ELX 70 SX,ELX,S,SX | 176/AF/AF53/AF55 AF5C/AF5F/AG53/AI53 AI55/AT/AT53/AT55/CG/CG53/CG55 | D | 1697 | 176A3.000,176A3.000F 176A5.000,176B3.000,176B7.000 | M | + | C | 07/93 ▸ 09/99 | 7766279 | |
| 60 Diva,60 S,60 SX,70 ELX 70 SX,ELX,S,SX | 176/AF/AF53/AF55 AF5C/AF5F/AG53/AI53 AI55/AT/AT53/AT55/CG/CG53/CG55 | D | 1697 | 176A3.000,176A3.000F 176A5.000,176B3.000,176B7.000 | M | - | C | 07/93 ▸ 09/99 | 7740875 | |
| 60 Diva,60 S,60 SX,70 ELX 70 SX,ELX,S,SX | 176/AT/AT53/AT55/CG CG53/CG55 | D | 1697 | 176A3.000F,176B7.000 | M | - | | 06/95 ▸ 09/99 | 46442937 | 698180 |

## PUNTO II (99>2003)

| | | | | | | | | | | |
|---|---|---|---|---|---|---|---|---|---|---|
| 1.2 i,1.2 i 16V | 188/AX/AXA1/AXB1/BX BXA1/BXB1 | E | 1242 | 188A4.000,188A5.000 | M | + | | 07/99 ▸ | 46745051 | 696197 |
| 1.2 i,1.2 i 16V | 188/AX/AXA1/AXB1/BX BXA1/BXB1 | E | 1242 | 188A4.000,188A5.000 | M | + | | 07/99 ▸ 06/03 | 51742164 | 698484 |
| 1.2 i,1.2 i 16V | 188/AX/AXA1/AXB1/BX BXA1/BXB1 | E | 1242 | 188A4.000,188A5.000 | M | + | | 07/99 ▸ 06/03 | 46841314 | 696197 |
| 1.2 i,1.2 i 16V | 188/AX/AXA1/AXB1/BX BXA1/BXB1 | E | 1242 | 188A4.000,188A5.000 | M | + | | 07/99 ▸ 06/03 | 46789115 | |
| 1.2 i,1.2 i 16V | 188/AX/AXA1/AXB1/BX BXA1/BXB1 | E | 1242 | 188A4.000,188A5.000 | M | + | | 07/99 ▸ | 46785741 | 698484 |
| 1.2 i 16V | 188/AX/AXB1/BX/BXB1 | E | 1242 | 188A5.000 | M | + | | 01/01 ▸ 06/02 | 46818599 | 696197 |
| 1.2 i,1.2 i 16V | 188/AX/AXA1/AXB1/BX BXA1/BXB1 | E | 1242 | 188A4.000,188A5.000 | M | - | | 07/99 ▸ | 46745045 | 696106 |
| 1.2 i,1.2 i 16V | 188/AX/AXA1/AXB1/BX BXA1/BXB1 | E | 1242 | 188A4.000,188A5.000 | M | - | | 07/99 ▸ 06/03 | 46785738 | 698483 |
| 1.2 i,1.2 i 16V | 188/AX/AXA1/AXB1/BX BXA1/BXB1 | E | 1242 | 188A4.000,188A5.000 | M | - | | 07/99 ▸ 06/03 | 51738357 | 696106 |
| 1.2 i 16V | 188/AX/AXB1/BXB1 | E | 1242 | 188A5.000 | A | + | | 07/99 ▸ 06/03 | 46789115 | |
| 1.2 i 16V | 188/AX/AXB1/BXB1 | E | 1242 | 188A5.000 | A | + | | 07/99 ▸ | 46785741 | 698484 |
| 1.2 i 16V | 188/AX/AXB1/BXB1 | E | 1242 | 188A5.000 | A | + | | 07/99 ▸ 01/01 | 46841314 | 696197 |
| 1.2 i 16V | 188/AX/AXB1/BXB1 | E | 1242 | 188A5.000 | A | + | | 07/99 ▸ 06/03 | 51742164 | 698484 |
| 1.2 i 16V | 188/AX/AXB1/BXB1 | E | 1242 | 188A5.000 | A | + | | 07/99 ▸ 01/01 | 46745051 | 696197 |
| 1.2 i 16V | 188/AX/AXB1/BXB1 | E | 1242 | 188A5.000 | A | + | | 01/01 ▸ 06/02 | 46818599 | 696197 |
| 1.2 i 16V | 188/AX/AXB1/BXB1 | E | 1242 | 188A5.000 | A | - | | 07/99 ▸ 06/03 | 51738357 | 696106 |
| 1.2 i 16V | 188/AX/AXB1/BXB1 | E | 1242 | 188A5.000 | A | - | | 07/99 ▸ 06/03 | 46785738 | 698483 |
| 1.2 i 16V | 188/AX/AXB1/BXB1 | E | 1242 | 188A5.000 | A | - | | 07/99 ▸ | 46745045 | 696106 |
| 1.9 D,1.9 JTD | 188/AX/AXD1/AXE1 AXG1/BX/BXD1/BXE1 | D | 1910 | 188A2.000,188A3.000,188A7.000 | M | +/- | | 07/99 ▸ | 46846086 | |
| 1.9 D,1.9 JTD | 188/AX/AXD1/BX/BXD1 | D | 1910 | 188A2.000,188A3.000 | M | +/- | | 07/99 ▸ 06/03 | 51738696 | |
| 1.9 D,1.9 JTD | 188/AX/AXD1/AXE1 AXG1/BXD1/BXE1 | D | 1910 | 188A3.000,188A7.000 | M | - | | 07/99 ▸ 06/03 | 51738696 | |
| 1.9 JTD | 188/AXE1/BXE1 | D | 1910 | 188A2.000 | M | | | 07/99 ▸ 06/03 | 51738696 | |

## PUNTO II (2003>)

| | | | | | | | | | | |
|---|---|---|---|---|---|---|---|---|---|---|
| 1.2 i Bipower | 188BXA1 | F | 1242 | 188A4.000 | M | + | | 07/03 ▸ 08/09 | 51742164 | 698484 |
| 1.2 i Bipower | 188BXA1 | F | 1242 | 188A4.000 | M | + | | 07/03 ▸ 08/09 | 51708405 | 696104 |
| 1.2 i Bipower | 188BXA1 | F | 1242 | 188A4.000 | M | + | | 07/03 ▸ 08/09 | 46789115 | |
| 1.2 i Bipower | 188BXA1 | F | 1242 | 188A4.000 | M | + | | 07/03 ▸ | 46785741 | 698484 |
| 1.2 i Bipower | 188BXA1 | F | 1242 | 188A4.000 | M | - | | 07/03 ▸ 08/09 | 51738357 | 696106 |
| 1.2 i Bipower | 188BXA1 | F | 1242 | 188A4.000 | M | - | | 07/03 ▸ 08/09 | 46785738 | 698483 |
| 1.2 i Bipower | 188BXA1 | F | 1242 | 188A4.000 | M | - | | 07/03 ▸ | 51721477 | 696106 |
| 1.2 i,1.2 i 16V | 188/AXA1/AXB1/BXB1 | E | 1242 | 188A4.000,188A5.000 | M | + | | 07/03 ▸ 08/09 | 51708405 | 696104 |

# FIAT (.../...)

## PUNTO II (2003>) (.../...)

| | | | CC | | | AC | | | OE | Valeo | |
|---|---|---|---|---|---|---|---|---|---|---|---|
| 1.2 i,1.2 i 16V | 188/AXA1/AXB1/BXB1 | E | 1242 | 188A4.000,188A5.000 | M | + | | 07/03 ▸ 08/09 | 46789115 | | |
| 1.2 i,1.2 i 16V | 188/AXA1/AXB1/BXB1 | E | 1242 | 188A4.000,188A5.000 | M | + | | 07/03 ▸ 08/09 | 51742164 | 698484 | |
| 1.2 i,1.2 i 16V | 188/AXA1/AXB1/BXB1 | E | 1242 | 188A4.000,188A5.000 | M | + | | 07/03 ▸ | 46785741 | 698484 | |
| 1.2 i,1.2 i 16V | 188/AXA1/AXB1/BXB1 | E | 1242 | 188A4.000,188A5.000 | M | - | | 07/03 ▸ | 51721477 | 696106 | |
| 1.2 i,1.2 i 16V | 188/AXA1/AXB1/BXB1 | E | 1242 | 188A4.000,188A5.000 | M | - | | 07/03 ▸ 08/09 | 51738357 | 696106 | |
| 1.2 i,1.2 i 16V | 188/AXA1/AXB1/BXB1 | E | 1242 | 188A4.000,188A5.000 | M | - | | 07/03 ▸ 08/09 | 46785738 | 698483 | |
| 1.4 i 16V | 188/AXM1/BXM1 | E | 1368 | 843A1.000 | M | + | | 07/03 ▸ 08/09 | 51738688 | | |
| 1.4 i 16V | 188/AXM1/BXM1 | E | 1368 | 843A1.000 | M | + | | 07/03 ▸ | 46834077 | | |
| 1.4 i 16V | 188/AXM1/BXM1 | E | 1368 | 843A1.000 | M | - | | 07/03 ▸ 08/09 | 51738357 | 696106 | |
| 1.4 i 16V | 188/AXM1/BXM1 | E | 1368 | 843A1.000 | M | - | | 07/03 ▸ | 51721477 | 696106 | |
| 1.3 JTD 16V | 188/AXH1/BXH1 | D | 1248 | 188A9.000 | M | | | 07/03 ▸ | 51708004 | | |
| 1.3 JTD 16V | 188/AXH1/BXH1 | D | 1248 | 188A9.000 | M | | | 07/03 ▸ 08/09 | 51738689 | | |
| 1.9 JTD | 188/AXG1/BXG1 | D | 1910 | 188A7.000 | M | | | 07/03 ▸ 08/09 | 51738696 | | |
| 1.9 JTD | 188/AXG1/BXG1 | D | 1910 | 188A7.000 | M | | | 07/03 ▸ | 46846086 | | |
| 1.9 JTD | 188/AXL1/BXL1 | D | 1910 | 188B2.000 | M | | | 07/03 ▸ 08/09 | 51708726 | | |

## SEICENTO

| | | | | | | | | | | | |
|---|---|---|---|---|---|---|---|---|---|---|---|
| - | 187/AEA1/AXA | L | - | ELETTRA | A | + | C | 09/98 ▸ 08/05 | 46519308 | | |
| 0.9 i | 187/AXA/AXA1 | E | 899 | 1170A1.046,1170A1.046F | M | + | C | 03/98 ▸ 08/05 | 46519308 | | |
| 0.9 i | 187/AXA/AXA1 | E | 899 | 1170A1.046,1170A1.046F | M | - | C | 03/98 ▸ 08/05 | 46559851 | 696100 | |
| 0.9 i | 187AXA1 | E | 899 | 1170A1.046F | A | + | C | 03/98 ▸ 08/00 | 46519308 | | |
| 0.9 i | 187AXA1 | E | 899 | 1170A1.046F | A | - | C | 03/98 ▸ 08/00 | 46559851 | 696100 | |
| 1.1 i | 187/AXB1/AXC1/CXC1 | E | 1108 | 176B2.000,187A1.000 | M | + | C | 03/98 ▸ 08/05 | 46519308 | | |
| 1.1 i | 187/AXC1/CXC1 | E | 1108 | 187A1.000 | M | - | C | 09/00 ▸ 08/05 | 46789792 | 698562 | |
| 1.1 i | 187AXB1 | E | 1108 | 176B2.000 | M | - | C | 03/98 ▸ 08/00 | 46559851 | 696100 | |

## SIENA (97>2001)

| | | | | | | | | | | | |
|---|---|---|---|---|---|---|---|---|---|---|---|
| 1.2 i | 178/CXS1/CXU1 | E | 1242 | 178B7.045,178C4.066 | M | + | | 06/99 ▸ 12/01 | 46473281 | | |
| 1.2 i | 178/CXS1/CXU1 | E | 1242 | 178B7.045,178C4.066 | M | - | | 06/99 ▸ 12/01 | 46471862 | | |
| 1.4 i | 178/CXC/CXP | E | 1372 | 178B2.000,178B2.016 | M | + | | 11/97 ▸ 12/01 | 46449101 | | |
| 1.4 i | 178/CXC/CXP | E | 1372 | 178B2.000,178B2.016 | M | - | | 11/97 ▸ 12/01 | 46449133 | | |
| 1.6 i | 178CXV1 | E | 1580 | 178D2.011 | M | + | | 06/99 ▸ 12/01 | 46449101 | | |
| 1.6 i | 178CXV1 | E | 1580 | 178D2.011 | M | - | | 06/99 ▸ 12/01 | 46449133 | | |
| 1.6 i 16V | 178/CXD/CXQ | E | 1581 | 178B3.000,178C7.098 | M | + | | 11/97 ▸ 12/01 | 46449101 | | |
| 1.6 i 16V | 178/CXD/CXQ | E | 1581 | 178B3.000,178C7.098 | M | - | | 11/97 ▸ 12/01 | 46449133 | | |
| 1.7 D | 178CXN | D | 1697 | 176B3.000 | M | +/- | | 09/98 ▸ 12/01 | 46453396 | | |
| 1.6 i | 178 | | - | | M | + | | 1997 ▸ 12/01 | 46449101 | | |
| 1.2 i | 178 | | - | | M | + | | 1997 ▸ 12/01 | 46473281 | | |
| 1.6 i | 178 | | - | | M | - | | 1997 ▸ 12/01 | 46449133 | | |
| 1.2 i | 178 | | - | | M | - | | 1997 ▸ 12/01 | 46471862 | | |

## SIENA (2002>)

| | | | | | | | | | | | |
|---|---|---|---|---|---|---|---|---|---|---|---|
| 1.2 i 16V | | E | 1242 | 188A5.000 | M | | | 01/02 ▸ | 46792221 | | |

## STILO (2001>2004)

| | | | | | | | | | | | |
|---|---|---|---|---|---|---|---|---|---|---|---|
| 1.2 i 16V | 192/AXA1/BXA1 | E | 1242 | 188A5.000 | M | + | C | 09/01 ▸ 12/03 | 46723519 | | |
| 1.2 i 16V | 192/AXA1/BXA1 | E | 1242 | 188A5.000 | M | - | C | 09/01 ▸ 12/03 | 46723518 | | |
| 1.6 i 16V | 192/AXB1/BXB1/CXB1 | E | 1596 | 182B6.000 | M | + | C | 09/01 ▸ 12/03 | 46723519 | | |
| 1.6 i 16V | 192CXB1 | E | 1596 | 182B6.000 | M | + | | 01/03 ▸ 12/03 | 46723520 | | |
| 1.6 i 16V | 192/AXB1/BXB1/CXB1 | E | 1596 | 182B6.000 | M | - | C | 09/01 ▸ 12/03 | 46723518 | | |
| 1.8 i 16V | 192/AXC1/BXC1 | E | 1747 | 192A4.000 | M | + | | 09/01 ▸ 12/03 | 46723521 | | |
| 1.8 i 16V | 192/AXC1/BXC1 | E | 1747 | 192A4.000 | M | - | | 09/01 ▸ 12/03 | 46723520 | | |
| 1.8 i 16V | 192CXC1 | E | 1747 | 192A4.000 | M | | | 01/03 ▸ 10/03 | 46723520 | | |
| 2.4 i 20V | 192/AXD1/BXD1 | E | 2446 | 192A2.000 | M | + | | 09/01 ▸ 12/03 | 46723521 | | |
| 1.9 JTD | 192/AXE1/AXF1/BXE1 BXF1 | D | 1910 | 192A1.000,192A3.000 | M | + | | 09/01 ▸ 12/03 | 46723521 | | |
| 1.9 JTD | 192/AXE1/AXF1/BXE1 BXF1 | D | 1910 | 192A1.000,192A3.000 | M | - | | 09/01 ▸ 12/03 | 46723520 | | |
| 1.9 JTD | 192/CXE1/CXF1/DXE1 DXF1 | D | 1910 | 192A1.000,192A3.000 | M | | | 01/03 ▸ 12/03 | 46723520 | | |

## STILO (2004>)

| | | | | | | | | | | | |
|---|---|---|---|---|---|---|---|---|---|---|---|
| 1.4 i 16V | 192DXH1 | E | 1368 | 843A1.000 | M | + | | 01/04 ▸ 09/07 | 46723520 | | |
| 1.4 i 16V | 192/AXH1/BXH1/CXH1 DXH1 | E | 1368 | 843A1.000 | M | + | | 01/04 ▸ 01/08 | 46723519 | | |
| 1.4 i 16V | 192/AXH1/BXH1/CXH1 DXH1 | E | 1368 | 843A1.000 | M | | | 01/04 ▸ 01/08 | 46723518 | | |
| 1.6 i 16V | 192/7JX/AXB1/AXR1 BXB1/CXB1/DXB1 | E | 1596 | 178E7.000,182B6.000,192B3.000 | M | + | | 01/04 ▸ | 46723520 | | |

Fan System Groupe moto-ventilateur Lüftersystem Gruppo Motoventilatore Fan-systeem Fan sistemi
Grupo motorventilador Модуль вентилятора ventilátor rendszer Modul sahary Modul ventilator Σύστημα ανεμιστήρα



• **New** Nouveau **Nuevo** Novo **Nuovo** Nieuw **Neu** Nowość **Yeni** Новый Νέο **Novy**

| Type Ctr. | | CC | | AC | | | OE | Valeo | |
|---|---|---|---|---|---|---|---|---|---|
| **FIAT (.../...)** | | | | | | | | | |
| **STILO (2004>) (.../...)** | | | | | | | | | |
| 1.6 i 16V 192/74X/AXB1/AXR1 BXB1/CXB1/DXB1 | E | 1596 | 178E7.000,182B6.000,192B3.000 | M | + | | 01/04 ▸ | 46723519 | |
| 1.6 i 16V 192/AXB1/AXR1/BXB1 CXB1/DXB1 | E | 1596 | 182B6.000,192B3.000 | M | | | 01/04 ▸ 01/08 | 46723518 | |
| 1.8 i 16V 192/AXC1/BXC1 | E | 1747 | 192A4.000 | M | | | 01/04 ▸ 04/07 | 46723519 | |
| 1.9 JTD,1.9 JTD 16V 192/3/54/5J8/AXE1 1.9 JTD Multijet 16V BXE1/BXF1/CXE1/CXF1 CXG1/CXL1/DXE1/DXF1/DXG1 | D | 1910 | 192A1.000,192A3.000,192A5.000 937A4.000 | M | | | 01/04 ▸ 01/08 | 46723519 | |
| **TEMPRA** | | | | | | | | | |
| 1.6 ie 159AJ54 | E | 1581 | 159B9.000 | M | + | | 07/94 ▸ | 46541006 | **696095** |
| **FIAT** | | | | | | | | | |
| **DOBLO (2000>2003)** | | | | | | | | | |
| 1.2 i 223AXA1 | E | 1242 | 223A5.000 | M | + | C | 10/00 ▸ 12/03 | 46737732 | |
| 1.2 i 223AXA1 | E | 1242 | 223A5.000 | M | - | C | 10/00 ▸ 12/03 | 46737731 | |
| 1.9 DS 223AXB1 | D | 1910 | 223A6.000 | M | + | | 10/00 ▸ 12/03 | 46737734 | |
| 1.9 DS 223AXB1 | D | 1910 | 223A6.000 | M | - | C | 10/00 ▸ 12/03 | 46737733 | |
| **DOBLO (2004>2005)** | | | | | | | | | |
| 1.2 i 223AXA1 | E | 1242 | 223A5.000 | M | - | | 01/04 ▸ 12/05 | 46737732 | |
| 1.2 i 223AXA1 | E | 1242 | 223A5.000 | M | - | | 01/04 ▸ 12/05 | 46737731 | |
| 1.6 i GNV 16V 223AXD1 | E | 1596 | 182B6.000 | M | + | | 01/04 ▸ 12/05 | 46786099 | |
| 1.3 MTJ 16V 223AXG1 | D | 1248 | 188A9.000 | M | + | | 01/04 ▸ 12/05 | 51753828 | |
| 1.3 MTJ 16V 223AXG1 | D | 1248 | 188A9.000 | M | - | Left/gauche | 01/04 ▸ 12/05 | 51738799 | |
| 1.9 JTD 223WXF1 | D | 1910 | 223A7.000 | M | + | | 09/05 ▸ 12/05 | 51753828 | |
| 1.9 JTD 223WXF1 | D | 1910 | 223A7.000 | M | - | Left/gauche | 09/05 ▸ 12/05 | 51738799 | |
| **DOBLO II (2006>)** | | | | | | | | | |
| 1.3 MJTD 16V 223AXN1 | D | 1248 | 199A9.000 | M | + | | 01/06 ▸ | 51755591 | |
| 1.9 MJTD 8V 223/AXH1/AXL1 | D | 1910 | 186A9.000,223B1.000 | M | + | | 01/06 ▸ | 51755591 | |
| **DOBLO CARGO (2000>2003)** | | | | | | | | | |
| 1.2 i 223ZXA1 | E | 1242 | 223A5.000 | M | + | C | 10/00 ▸ 12/03 | 46737732 | |
| 1.2 i 223ZXA1 | E | 1242 | 223A5.000 | M | - | C | 10/00 ▸ 12/03 | 46737731 | |
| 1.9 DS 223ZXB1 | D | 1910 | 223A6.000 | M | + | | 10/00 ▸ 12/03 | 46737734 | |
| 1.9 JTD 223/AXE1/ZXE1 | D | 1910 | 182B9.000 | M | + | | 10/01 ▸ 12/03 | 51753828 | |
| 1.9 DS 223ZXB1 | D | 1910 | 223A6.000 | M | - | C | 10/00 ▸ 12/03 | 46737733 | |
| 1.9 JTD 223/AXE1/ZXE1 | D | 1910 | 182B9.000 | M | - | Left/gauche | 10/01 ▸ 12/03 | 51738799 | |
| **DOBLO CARGO (2004>2005)** | | | | | | | | | |
| 1.2 i 223ZXA1 | E | 1242 | 223A5.000 | M | - | | 01/04 ▸ 12/05 | 46737731 | |
| 1.3 MTJ 16V 223/AXG1/WXG1/ZXG1 | D | 1248 | 188A9.000 | M | - | | 01/04 ▸ 12/05 | 51753828 | |
| 1.3 MTJ 16V 223/AXG1/WXG1/ZXG1 | D | 1248 | 188A9.000 | M | - | | 01/04 ▸ 12/05 | 51738799 | |
| 1.9 JTD 223/AXF1/WXF1/ZXF1 | D | 1910 | 223A7.000 | M | + | | 09/05 ▸ 12/05 | 51753828 | |
| 1.9 DS 223ZXB1 | D | 1910 | 223A6.000 | M | - | | 01/04 ▸ 12/05 | 46737733 | |
| 1.9 JTD 223/AXF1/WXF1/ZXF1 | D | 1910 | 223A7.000 | M | - | | 09/05 ▸ 12/05 | 51738799 | |
| **DOBLO CARGO II (2006>)** | | | | | | | | | |
| 1.3 MJTD 16V 223/WXN1/ZXN1 | D | 1248 | 199A9.000 | M | + | | 01/06 ▸ | 51755591 | |
| 1.9 MJTD 223/WXL1/WXR1/ZXR1 | D | 1910 | 223B2.000 | M | + | | 01/06 ▸ | 51755591 | |
| **DUCATO (230) (94>2001)** | | | | | | | | | |
| 2.0,2.0 i 230/AGMF/AGMP/AGMS AGMT/AGMU/AGWT/AHMF/AHMP/BGMA/BGMC/BGMD/BGMF BGMH/BGMN/BGMP/BGMQ/BGMS/BGWN/BGWS/BGWT/CGMA CGMC/CGMD/CGMF/CGMH/CGMM/CGMN | E | 1998 | XU102CU,XU10J2U | M | + | | 02/94 ▸ 12/01 | | **696101** |
| 1.9 D,1.9 TD 230/0NMQ/AMMC/AMMD AMMF/AMMQ/ANMA/ANMF/ANMP/ANMQ/BLMA/BNMA/BNMF BNMM/BNMQ/ENMF | D | 1905 | XUD9A,XUD9TEF/W3 | M | + | | 06/98 ▸ 12/01 | | **696101** |
| 1.9 D,1.9 TD 230/AAMA/AAMB/AAMD AAMF/AAMQ/AAMR/ABMA/ABMB/ABMD/ABMF/ABMP/ABMQ ABMR/ACMA/ACMD/ACMF/BBMA/BBMD/BBMF/BBMN/BBMP BBMQ/BBMR/BCMA/BCMD/BCMF/BCMQ/EAMF/EBMF | D | 1929 | 230A2.000,230A3.000,230A4.000 | M | + | | 02/94 ▸ 12/01 | | **696101** |

| Type Ctr. | | CC | | AC | | 2+3 | OE | Valeo | |
|---|---|---|---|---|---|---|---|---|---|
| **FIAT** (.../...) | | | | | | | | | |
| **DUCATO (230) (94>2001) (.../...)** | | | | | | | | | |
| 2.5 D,2.5 TD 230/ADMF/ADMT/ADMU AEMP/AEMT/AEMU/AFMP/BAMF/BDMA/BDMB/BDMD/BDMF BDMG/BDMH/BDMN/BDMQ/BDMR/BDMS/BDMT/BEMA/BEMB BEMD/BEMF/BEMG/BEMH/BEMN/BEMQ/BEMR/BEMS/BEMT BFMA/BFMB/BFMD/BFMF/BFMG/BFMH/BFMN/BFMQ/BFMR BFMS/BLWF/CDMA/CDMB/CDMD/CDME/CDMF/CDMG/CDMH CDML/CDMM/C | D | 2499 | 8140-47,8140-47R,8140-67 | M | + | | 02/94 ▸ 12/01 | | 696101 | |
| 2.8 D,2.8 JTD,2.8 TDi 233CIMN, 230/AIMF AIMT/AIMU/ALMP/ALMT/ALWP/ALWT/APMF/APMP/APWP BIMA/BIMC/BIMD/BIMF/BIMH/BIMM/BIMN/BIMP/BIMQ BIMS/BIMT/BLMA/BLMF/BLMH/BLMM/BLMN/BLMP/BLMQ BLMS/BLMT/BLMU/BLWA/BLWF/BLWN/BLWQ/BLWS/BLWT BPMA/BPMF/BPMN/BPMP/BPMS/BPMT/BPWD/BPWF/CEMN CIMA/CIME/CI | D | 2798 | 8140-43,8140-43S,8140-63 | M | + | | 01/98 ▸ 12/01 | | 696101 | |
| 2.8 JTD 230 | D | 2798 | 8140-43S | A | + | | 05/01 ▸ 12/01 | | 696101 | |
| **DUCATO (2002>2006)** | | | | | | | | | |
| 2.0 i 244/APMP/ATMF/ATMP/ATMR/BTMF/BTMR/BTWF/CTMF CTMN/CTWN | E | 1998 | RFL | M | + | | 01/02 ▸ 06/06 | | 696101 | |
| 2.0 JTD 244/AAMF/AAMP/AAMR BAMF/BAMR | D | 1997 | RHV | M | +/- | | 01/02 ▸ 09/04 | | 696101 | |
| 2.3 JTD 244/ASMF/ASMN/ASMP ASMR/CSMF | D | 2287 | F1AE0481C | M | +/- | | 01/02 ▸ 09/04 | | 696101 | |
| 2.8 JTD,2.8 TD 244/APMF/APMP/APMR APWP/BPMF/BPMP/BPMR/BPWN/BPWR/CPMF/CPMN/CPWN | D | 2798 | 8140-43,8140-43N,8140-43S | M | +/- | | 01/02 ▸ 09/04 | | 696101 | |
| **STRADA PICK UP** | | | | | | | | | |
| Trekking 178EXG | E | 1242 | 178B5.000 | M | + | | 03/99 ▸ 03/03 | 46473281 | | |
| Trekking 178EXG | E | 1242 | 178B5.000 | M | - | | 03/99 ▸ 03/03 | 46471862 | | |
| - 178/EX/EXH | D | 1697 | 176A3.000,176A3.000F | M | + | | 03/99 ▸ 03/03 | 46480350 | | |
| Trekking 178/EX/EXH | D | 1697 | 176A3.000,176A3.000F | M | - | | 03/99 ▸ 03/03 | 46449101 | | |
| **FORD** | | | | | | | | | |
| **COUGAR** | | | | | | | | | |
| 2.0 i FT60T | E | 1998 | EDB | M | | | 09/98 ▸ 02/01 | 1095445 | | |
| 2.5 i V6 | E | 2495 | LCBE | M | +/- | | 06/00 ▸ 02/01 | 1095445 | | |
| 2.5 i V6 | E | 2495 | LCBE | A | +/- | | 06/00 ▸ 02/01 | 1095445 | | |
| 2.5 i V6 | E | 2544 | MABA | M | +/- | | 06/00 ▸ 02/01 | 1095445 | | |
| **FIESTA (95>99)** | | | | | | | | | |
| 1.0 i JAS, JBS | E | 999 | TD | M | + | | 05/99 ▸ 08/99 | 1092374 | | |
| 1.0 i JBSC4 | E | 999 | C4 | M | - | | 05/96 ▸ 04/99 | 1020917 | 696159 | |
| 1.0 i JAS, JBS | E | 999 | TD | M | - | | 05/99 ▸ 08/99 | 1092378 | 698493 | |
| 1.2 i 16V JASDHA, JBSDHA | E | 1242 | DHA | M | + | | 08/95 ▸ 09/99 | 1020914 | 696158 | |
| 1.2 i 16V JASDHA | E | 1242 | DHA | A | + | | 08/95 ▸ 08/99 | 1020914 | 696158 | |
| 1.2 i 16V JASDHA | E | 1242 | DHA | A | - | | 08/95 ▸ 06/98 | 1020917 | 696159 | |
| 1.3 i JAS/J4C/JJA, JBS/J4C/JJA, JVS/J4C/JJA | E | 1299 | J4C,JJA | M | + | | 08/95 ▸ 08/99 | 1020914 | 696158 | |
| 1.4 i 16V JASFHA, JBSFHA | E | 1388 | FHA | M | + | | 01/96 ▸ 08/99 | 1020914 | 696158 | |
| 1.4 i 16V JASFHA, JBSFHA | E | 1388 | FHA | M | - | | 01/96 ▸ 08/99 | 1020917 | 696159 | |
| 1.8 D JAS/RTJ/RTK, JBS/RTJ/RTK, JVS/RTJ/RTK | D | 1753 | RTJ,RTK | M | + | | 08/95 ▸ 05/97 | 1020254 | 696160 | |
| 1.8 D JAS/RTJ/RTK, JBS/RTJ/RTK, JVS/RTJ/RTK | D | 1753 | RTJ,RTK | M | - | | 08/95 ▸ 08/99 | 1020253 | | |
| **FIESTA (99>2002)** | | | | | | | | | |
| 1.3 i JAS, JBS | E | 1299 | J4J,J4L,JJC,JJE | M | + | | 08/99 ▸ 03/02 | 1118161 | 696158 | |
| 1.4 i 16V JAS, JBS | E | 1388 | FHA,FHE | M | +/- | | 08/99 ▸ 03/02 | 1020917 | 696159 | |
| 1.6 i JAS, JBS | E | 1596 | ZL16 | M | + | | 10/99 ▸ 03/02 | 1092374 | | |
| 1.6 i JAS, JBS | E | 1596 | ZL16 | M | - | | 10/99 ▸ 03/02 | 1092378 | 698493 | |
| 1.8 D JASRTJ, JBSRTJ | D | 1753 | RTK | M | - | | 09/99 ▸ 03/02 | 1020253 | | |
| 1.8 TDdi JAS, JBS | D | 1753 | DI-TD | M | - | | 02/00 ▸ 03/02 | 1112868 | | |
| **FIESTA (2002>2005)** | | | | | | | | | |
| 1.2 i 16V NH | E | 1242 | 1.25 ZETEC-S,1.25 ZETEC-S/DU | M | - | | 02/03 ▸ 09/05 | 1337582 | 696277 | |
| 1.3 i NH | E | 1299 | BAJA,DURATEC 1.3 EFI | M | + | | 03/02 ▸ 10/03 | 1141507 | 696276 | |
| 1.3 i NH | E | 1299 | BAJA,DURATEC 1.3 EFI | M | - | | 06/04 ▸ 09/05 | 1337582 | 696277 | |
| 1.4 i 16V NH | E | 1388 | ZETEC-S 1.4 EFI | M | + | | 03/02 ▸ 10/03 | 1141507 | 696276 | |
| 1.4 i 16V NH | E | 1388 | ZETEC-S 1.4 EFI | M | - | | 06/04 ▸ 09/05 | 1337582 | 696277 | |
| 1.6 i 16V NH | E | 1596 | ZETEC-S 1.6 EFI | M | + | | 03/02 ▸ 10/03 | 1141507 | 696276 | |
| 1.6 i 16V NH | E | 1596 | ZETEC-S 1.6 EFI | M | - | | 06/04 ▸ 09/05 | 1337582 | 696277 | |

Fan System Groupe moto-ventilateur Lüftersystem Gruppo Motoventilatore Fan-systeem Fan sistemi
Grupo motorventilador Модуль вентилятора ventilátor rendszer Modul sahary Modul ventilator Σύστημα ανεμιστήρα



• **New** Nouveau **Nuevo** Novo **Nuovo** Nieuw **Neu** Nowość **Yeni** Новый Νέο **Novy**

| | | | CC | | | AC | | | OE | Valeo | |
|---|---|---|---|---|---|---|---|---|---|---|---|
| **FORD** (.../...) | | | | | | | | | | | |
| **FIESTA (2002>2005) (.../...)** | | | | | | | | | | | |
| 1.6 i 16V | NH | E | 1596 | ZETEC-S 1.6 EFI | A | + | | 03/02 ▸ 10/03 | 1141507 | **696276** | |
| 1.4 TDCi | NH | D | 1399 | F6JA | M | + | | 03/02 ▸ 09/05 | 1366100 | **696276** | |
| 1.4 TDCi | NH | D | 1399 | F6JA | M | - | | 03/02 ▸ 09/05 | 1337585 | **696278** | |
| **FIESTA (2008>)** | | | | | | | | | | | |
| 1.25 i 60 16V,1.25 i 82 16V | | E | 1242 | 1.25 DURATEC,1.25DC DOHC EFI | M | + | | 10/08 ▸ | 1557572 | **•696344** | |
| 1.25 i 60 16V,1.25 i 82 16V | | E | 1242 | 1.25 DURATEC,1.25DC DOHC EFI | M | - | | 10/08 ▸ | 1541277 | **•696345** | |
| 1.4 i 16V | | E | 1388 | 1.4 ZC-S VCT | M | + | | 10/08 ▸ | 1557572 | **•696344** | |
| 1.4 i 16V | | E | 1388 | 1.4 ZC-S VCT | M | - | | 10/08 ▸ | 1541277 | **•696345** | |
| 1.6 Ti-VCT 16V | | E | 1596 | 1.6 DC TI-VCT | M | - | | 10/08 ▸ | 1541277 | **•696345** | |
| 1.4 TDCi 68 | | D | 1399 | 1.4 DC TDCI | M | - | | 10/08 ▸ | 1557572 | **•696344** | |
| 1.6 TDCi 16V | | D | 1560 | 1.6 DQ TDCI/F,1.6 DURATORQ/F | M | - | | 10/08 ▸ | 1557572 | **•696344** | |
| 1.6 TDCi 16V | | D | 1560 | 1.6 DQ DI SOHC | M | + | | 06/10 ▸ | 1557574 | **•696346** | |
| **FOCUS (98>2001)** | | | | | | | | | | | |
| 1.4 i 16V | DBW, DFW, DNW, DAW | E | 1388 | FXDA,FXDC | M | + | | 10/98 ▸ 10/01 | 1075126 | **696150** | |
| 1.4 i 16V | DBW, DFW, DNW, DAW | E | 1388 | FXDA,FXDC | M | - | | 10/98 ▸ 10/01 | 1075135 | **696152** | |
| 1.6 i 16V | DBW, DFW, DNW, DAW | E | 1596 | FYDA,FYDC | M | + | | 10/98 ▸ 10/01 | 1075126 | **696150** | |
| 1.6 i 16V | DBW, DFW, DNW, DAW | E | 1596 | FYDA,FYDC | M | - | | 10/98 ▸ 10/01 | 1075135 | **696152** | |
| 1.6 i 16V | DBW, DFW, DNW, DAW | E | 1596 | FYDA,FYDC | A | + | | 10/98 ▸ 10/01 | 1075126 | **696150** | |
| 1.6 i 16V | DBW, DFW, DNW, DAW | E | 1596 | FYDA,FYDC | A | - | | 10/98 ▸ 10/01 | 1075135 | **696152** | |
| 1.8 i 16V | DBW, DFW, DNW, DAW | E | 1796 | EYDA,EYDC | M | + | | 10/98 ▸ 10/01 | 1075126 | **696150** | |
| 1.8 i 16V | DBW, DFW, DNW, DAW | E | 1796 | EYDA,EYDC | M | - | | 10/98 ▸ 10/01 | 1075127 | **696151** | |
| 1.8 i 16V | DFW | E | 1796 | EYDA | A | + | | 10/98 ▸ 10/01 | 1075126 | **696150** | |
| 1.8 i 16V | DFW | E | 1796 | EYDA | A | - | | 10/98 ▸ 10/01 | 1075127 | **696151** | |
| 2.0 i 16V | DBW, DFW, DNW, DAW | E | 1988 | EDDA,EDDC | M | + | | 10/98 ▸ 10/01 | 1075132 | **696153** | |
| 2.0 i 16V | DBW, DFW, DNW, DAW | E | 1988 | EDDA,EDDC | M | - | | 10/98 ▸ 10/01 | 1075127 | **696151** | |
| 1.8 TDi | DBW, DFW, DNW, DAW | D | 1753 | BHDA/B,C9DA/B/C | M | + | | 10/98 ▸ 10/01 | 1075130 | **696154** | |
| 1.8 TDi | DBW, DFW, DNW, DAW | D | 1753 | BHDA/B,C9DA/B/C | M | - | | 10/98 ▸ 10/01 | 1075123 | | |
| **FOCUS (2001>2003)** | | | | | | | | | | | |
| 1.4 i 16V | DBW, DFW, DNW, DAW | E | 1388 | FXDA,FXDC | M | + | | 11/01 ▸ 06/03 | 1075126 | **696150** | |
| 1.4 i 16V | DBW, DFW, DNW, DAW | E | 1388 | FXDA,FXDC | M | - | | 11/01 ▸ 08/04 | 1075135 | **696152** | |
| 1.6 i 16V | DBW, DFW, DNW, DAW | E | 1596 | FYDA,FYDC | M | + | | 11/01 ▸ 08/04 | 1075126 | **696150** | |
| 1.6 i 16V | DBW, DFW, DNW, DAW | E | 1596 | FYDA,FYDC | M | - | | 11/01 ▸ 08/04 | 1075127 | **696151** | |
| 1.6 i 16V | DBW, DFW, DNW, DAW | E | 1596 | FYDA,FYDC | A | + | | 11/01 ▸ 08/04 | 1075126 | **696150** | |
| 1.6 i 16V | DBW, DFW, DNW, DAW | E | 1596 | FYDA,FYDC | A | - | | 11/01 ▸ 08/04 | 1075127 | **696151** | |
| 1.8 i 16V | DBW, DFW, DNW, DAW | E | 1796 | EYDA,EYDC | M | + | | 11/01 ▸ 08/04 | 1075126 | **696150** | |
| 1.8 i 16V | DBW, DFW, DNW, DAW | E | 1796 | EYDA,EYDC | M | - | | 11/01 ▸ 08/04 | 1075127 | **696151** | |
| 1.8 i 16V | DFW | E | 1796 | EYDA | A | + | | 11/01 ▸ 08/04 | 1075126 | **696150** | |
| 1.8 i 16V | DFW | E | 1796 | EYDA | A | - | | 11/01 ▸ 08/04 | 1075127 | **696151** | |
| 2.0 i 16V | DBW, DFW, DNW, DAW | E | 1988 | EDDA,EDDC,ZH20EST | M | + | | 11/01 ▸ 08/04 | 1107126 | **696149** | |
| 2.0 i Turbo 16V | DBW | E | 1988 | D20RS | M | + | | 09/02 ▸ 08/04 | 1075132 | **696153** | |
| 2.0 i 16V | DNW | E | 1988 | EDDA,EDDC,ZH20EST | M | - | | 11/01 ▸ 08/04 | 1075127 | **696151** | |
| 1.8 TDCi,1.8 TDdi | DAY, DBW, DBY, DFW DFY, DNW, DAW | D | 1753 | 1.8 TC LYNX,BHDA/B,C9DA/B/C,FFDA | M | + | | 11/01 ▸ 08/03 | 1075130 | **696154** | |
| 1.8 TDCi,1.8 TDdi | DAY, DBW, DBY, DFW DFY, DNW, DAW | D | 1753 | 1.8 TC LYNX,BHDA/B,C9DA/B/C,FFDA | M | - | | 11/01 ▸ 08/04 | 1075123 | | |
| **FOCUS (2004>)** | | | | | | | | | | | |
| 1.6 i | | E | 1596 | 16LSEZ | M | + | | 09/04 ▸ 05/05 | 1075126 | **696150** | |
| 1.6 i | | E | 1596 | 16LSEZ | M | - | | 09/04 ▸ 05/05 | 1075127 | **696151** | |
| **FUSION (2002>2005)** | | | | | | | | | | | |
| 1.4 i 16V | | E | 1388 | ZETEC-S 1.4 EFI | M | - | | 06/02 ▸ 09/05 | 1337583 | | |
| 1.4 TDCi | | D | 1399 | F6JA | M | + | | 06/02 ▸ 09/05 | 1366100 | **696276** | |
| 1.4 TDCi | | D | 1399 | F6JA | M | - | | 06/02 ▸ 09/05 | 1337585 | **696278** | |
| **FUSION (2005>)** | | | | | | | | | | | |
| 1.4 i 16V | | E | 1388 | ZETEC-S 1.4 EFI | M | - | | 10/05 ▸ 07/10 | 1337583 | | |
| 1.4 TDCi | | D | 1399 | F6JC | M | + | | 10/05 ▸ | 1366100 | **696276** | |
| 1.4 TDCi | | D | 1399 | F6JC | M | - | | 10/05 ▸ | 1337585 | **696278** | |
| **KA (96>2008)** | | | | | | | | | | | |
| 1.3 i | RBT | E | 1299 | J4D,JJB | M | + | | 09/96 ▸ 06/98 | 1035249 | | |
| 1.3 i | RBT | E | 1299 | J4K,J4M,JJD,JJF | M | + | | 07/98 ▸ 10/02 | 1088844 | | |
| 1.3 i | RBT | E | 1299 | J4D,JJB | M | - | | 09/96 ▸ 06/98 | 1036754 | **696157** | |
| 1.3 i | RBT | E | 1299 | J4K,J4M,JJD,JJF | M | - | | 07/98 ▸ 10/02 | 1088845 | **696157** | |
| **MONDEO (93>2000)** | | | | | | | | | | | |
| 1.6 i | BFP, BNP, BAP | E | 1597 | L1,L1J-90 | M | + | | 08/96 ▸ 08/00 | 1095445 | | |

| Type Ctr. | | CC | | AC | | | OE | Valeo | |
|---|---|---|---|---|---|---|---|---|---|
| **FORD (.../...)** | | | | | | | | | |
| **MONDEO (93>2000) (.../...)** | | | | | | | | | |
| 1.8 i BFP, BNP, BAP | E | 1796 | RKJ | M | + | 08/96 ▸ 08/00 | 1095445 | | |
| 1.8 i BFP, BNP, BAP | E | 1796 | RKA,RKB | A | + | 01/93 ▸ 08/96 | 1095445 | | |
| 2.0 i BFP, BNP, BAP | E | 1988 | NGA | M | + | 08/96 ▸ 08/00 | 1095445 | | |
| 2.0 i BFP, BNP, BAP | E | 1997 | NGA | A | + | 06/93 ▸ 08/96 | 1095445 | | |
| 2.5 i V6 BFP, BNP, BAP | E | 2495 | SE | M | + | 04/99 ▸ 08/00 | 1095445 | | |
| 2.5 i V6 24V BFP, BNP, BAP | E | 2544 | SEA | M | + | 06/99 ▸ 08/00 | 1095445 | | |
| 2.5 i V6 24V BFP, BNP, BAP | E | 2544 | SEA | A | + | 06/99 ▸ 08/00 | 1095445 | | |
| 1.8 TD BFP, BNP, BAP | D | 1753 | RFN | M | + | 09/97 ▸ 08/00 | 1095445 | | |
| **MONDEO (2000>2003)** | | | | | | | | | |
| 1.8 i 16V WF0/AXX/FXX/NXX | E | 1798 | CGBA,CGBB,CHBA,CHBB | M | + | 10/00 ▸ 03/03 | 1117754 | | |
| 1.8 i 16V WF0/AXX/FXX/NXX | E | 1798 | CGBA,CGBB,CHBA,CHBB | M | + | 03/03 ▸ 05/03 | 1312596 | | |
| 1.8 i 16V WF0/AXX/FXX/NXX | E | 1798 | CGBA,CGBB,CHBA,CHBB | M | + | 09/03 ▸ | 1317304 | | |
| 2.0 i 16V WF0/AXX/FXX/NXX | E | 1999 | CJBA,CJBB | M | + | 10/00 ▸ 03/03 | 1117754 | | |
| 2.0 i 16V WF0/AXX/FXX/NXX | E | 1999 | CJBA,CJBB | M | + | 03/03 ▸ 05/03 | 1312596 | | |
| 2.0 i 16V WF0/AXX/FXX/NXX | E | 1999 | CJBA,CJBB | M | + | 09/03 ▸ | 1317304 | | |
| 2.0 i 16V WF0/AXX/FXX/NXX | E | 1999 | CJBA,CJBB | A | + | 10/00 ▸ 03/01 | 1095445 | | |
| 2.0 i 16V WF0FXX | E | 1999 | CJBA,CJBB | A | + | 03/01 ▸ 05/03 | 1152921 | | |
| 2.5 i V6 24V WF0/AXX/FXX/NXX | E | 2495 | LCBD | M | + | 10/00 ▸ 03/01 | 1095445 | | |
| 2.5 i V6 24V WF0/AXX/FXX/NXX | E | 2495 | LCBD | M | + | 03/01 ▸ 05/03 | 1152921 | | |
| 2.5 i V6 24V WF0/AXX/NXX | E | 2495 | LCBD | M | - | 12/03 ▸ | 1331402 | •696363 | |
| 2.5 i V6 24V WF0/AXX/NXX | E | 2495 | LCBD | A | +/- | 10/00 ▸ 03/01 | 1095445 | | |
| 2.5 i V6 24V WF0FXX | E | 2495 | LCBD | A | + | 10/00 ▸ 03/01 | 1095445 | | |
| 2.5 i V6 24V WF0FXX | E | 2495 | LCBD | A | + | 03/01 ▸ 05/03 | 1152921 | | |
| 2.0 TDCi 16V,2.0 TDDI 16V WF0FXX | D | 1998 | 2.0 DURATORQ DI,D5BA,FMBA | M | + | 09/01 ▸ 05/03 | 1152920 | •696362 | |
| 2.0 TDCi 16V WF0FXX | D | 1998 | FMBA | A | + | 10/01 ▸ 05/03 | 1152920 | •696362 | |
| **MONDEO (2003>2005)** | | | | | | | | | |
| 1.8 SCi 16V | E | 1798 | ZH18 | M | + | 06/03 ▸ 09/03 | 1312596 | | |
| 1.8 SCi 16V | E | 1798 | ZH18 | M | + | 09/03 ▸ 04/05 | 1317304 | | |
| 2.5 i V6 24V | E | 2495 | LCBD | M | + | 06/03 ▸ 04/05 | 1152921 | | |
| 2.5 i V6 24V | E | 2495 | LCBD | M | - | 12/03 ▸ 04/05 | 1331402 | •696363 | |
| 2.5 i V6 24V | E | 2495 | LCBD | A | + | 06/03 ▸ 04/05 | 1230721 | •696362 | |
| 2.0 TDDi 16V | D | 1998 | D5BA | M | + | 06/03 ▸ 04/05 | 1152921 | | |
| 2.0 TDDi 16V | D | 1998 | D5BA | M | - | 12/03 ▸ 04/05 | 1331402 | •696363 | |
| **MONDEO (2005>2007)** | | | | | | | | | |
| 1.8 i 16V | E | 1798 | DURA18 | M | + | 05/05 ▸ 06/07 | 1317304 | | |
| 2.0 i 16V | E | 1999 | 2.0L DURATEC-HE | M | + | 05/05 ▸ 06/07 | 1317304 | | |
| 2.0 i 16V | E | 1999 | 2.0L DURATEC-HE | A | + | 05/05 ▸ 06/07 | 1317304 | | |
| 2.0 TDCi 16V | D | 1998 | 2.0DI DURATORQ,DURATQ20 | M | + | 05/05 ▸ 06/07 | 1230721 | •696362 | |
| 2.2 TDCi 16V | D | 2198 | DURATQ22 | M | + | 05/05 ▸ 06/07 | 1230721 | •696362 | |
| **FORD** | | | | | | | | | |
| **COURRIER (96>)** | | | | | | | | | |
| 1.3 i J3SA, J5SJ4C | E | 1299 | J4C | M | + | 10/96 ▸ 09/02 | 1020914 | 696158 | |
| 1.6 i J3S | E | 1596 | ZL16 | M | + | 07/99 ▸ 05/02 | 1092374 | | |
| 1.6 i J3S | E | 1596 | ZL16 | M | - | 07/99 ▸ 05/02 | 1092378 | 698493 | |
| 1.8 D J3SC, J5SRTJ | D | 1753 | RTJ | M | + | 10/96 ▸ 05/97 | 1020254 | 696160 | |
| 1.8 D J3SC, J5SRTJ | D | 1753 | RTJ | M | - | 10/96 ▸ 09/02 | 1020253 | | |
| **TOURNEO CONNECT (2002>2006)** | | | | | | | | | |
| 1.8 i 16V | E | 1796 | EYPA | M | - | 05/02 ▸ 06/06 | 4371780 | | |
| 1.8 TDCi,1.8 TDdi | D | 1753 | D18DI,D18TCI | M | + | 05/02 ▸ 06/06 | 4391619 | | |
| 1.8 TDCi,1.8 TDdi | D | 1753 | D18DI,D18TCI | M | + | 05/02 ▸ 06/06 | 4540015 | | |
| 1.8 TDdi | D | 1753 | D18DI | M | - | 05/02 ▸ 05/03 | 4371780 | | |
| 1.8 TDCi,1.8 TDdi | D | 1753 | D18DI,D18TCI | M | - | 05/02 ▸ 05/05 | 4540014 | | |
| **TRANSIT CONNECT (2002>2006)** | | | | | | | | | |
| 1.8 i 16V PT2EYP, PU2EYP | E | 1796 | EYPA | M | + | 05/02 ▸ 06/06 | 4391619 | | |
| 1.8 i 16V PT2EYP, PU2EYP | E | 1796 | EYPA | M | + | 10/03 ▸ 06/06 | 4540015 | | |
| 1.8 i 16V PT2EYP, PU2EYP | E | 1796 | EYPA | M | + | 10/03 ▸ | 4521760 | | |
| 1.8 i 16V PT2EYP, PU2EYP | E | 1796 | EYPA | M | - | 05/02 ▸ 06/06 | 4371780 | | |
| 1.8 TDCi PT2HCP, PU2HCP | D | 1753 | D18TCI | M | +/- | 05/02 ▸ 06/06 | 4540015 | | |
| 1.8 TDCi,1.8 TDdi PT2/BHP/HCP, PU2/BHP HCP | D | 1753 | D18DI,D18TCI | M | + | 05/02 ▸ 06/06 | 4391619 | | |
| 1.8 TDdi PT2BHP, PU2BHP | D | 1753 | D18DI | M | - | 05/02 ▸ 05/03 | 4371780 | | |

Fan System Groupe moto-ventilateur Lüftersystem Gruppo Motoventilatore Fan-systeem Fan sistemi
Grupo motorventilador Модуль вентилятора ventilátor rendszer Modul sahary Modul ventilator Σύστημα ανεμιστήρα



• **New** Nouveau **Nuevo** Novo **Nuovo** Nieuw **Neu** Nowość **Yeni** Новый Νέο **Novy**

| | | CC | | | AC | | | OE | Valeo | |
|---|---|---|---|---|---|---|---|---|---|---|
| **FORD (.../...)** | | | | | | | | | | |
| **TRANSIT CONNECT (2002>2006) (.../...)** | | | | | | | | | | |
| 1.8 TDdi | PT2BHP, PU2BHP | D | 1753 | D18DI | M | - | | 05/03 ▸ 05/05 | 4540014 | |
| **LANCIA** | | | | | | | | | | |
| **DEDRA** | | | | | | | | | | |
| 1.6 ie 16V | 835/EI54A/EI55B | E | 1581 | 182A4.000 | M | + | | 04/98 ▸ 09/99 | 46541006 | 696095 |
| **LYBRA** | | | | | | | | | | |
| 1.6 i 16V | 839/AXA1A0/BXA1A0 | E | 1581 | 182A4.000 | M | + | C | 09/99 ▸ 12/06 | 46738062 | |
| 1.6 i 16V | 839/AXF1A/BXF1A | E | 1596 | 182B6.000 | M | | C | 09/99 ▸ 12/06 | 46738062 | |
| 1.9 JTD | 839BXD1A0 | D | 1910 | AR32302 | M | + | | 05/00 ▸ 12/06 | 46779645 | |
| 1.9 JTD | 839/AXI1A/BXI1A | D | 1910 | 937A2.000,AR37101 | M | | | 09/99 ▸ 12/06 | 46805101 | |
| 1.9 JTD | 839AXD1A0 | D | 1910 | AR32302 | M | | | 05/00 ▸ 12/06 | 46779645 | |
| 2.4 JTD | 839AXL1A | D | 2387 | 839A6.000 | M | + | | 09/99 ▸ 07/02 | 46805101 | |
| 2.4 JTD | 839BXL1A | D | 2387 | 839A6.000 | M | | | 09/99 ▸ 07/06 | 46805101 | |
| 2.4 JTD | 839/AXE1A/AXE1A0 BXE1A/BXE1A0 | D | 2387 | 839A5.000,AR32501 | M | | | 05/00 ▸ 04/01 | 46779645 | |
| **MUSA (2004>2006)** | | | | | | | | | | |
| 1.4 MPi,1.4 i 16V | 350/AXA11/AXA1A AXF1A | E | 1368 | 192B2.000,350A1.000,843A1.000 | M | - | | 07/04 ▸ 09/07 | 51738357 | 696106 |
| 1.3 JTD Multijet 16V | 350/AXB11/AXB1A | D | 1248 | 188A9.000 | M | +/- | | 07/04 ▸ 09/07 | 51760613 | |
| 1.9 JTD | 350AXC1A | D | 1910 | 188B2.000 | M | +/- | | 07/04 ▸ 09/07 | 51752062 | |
| **MUSA (2007>)** | | | | | | | | | | |
| 1.4 MPi,1.4 i 16V | 350/AXA1A/AXF1A | E | 1368 | 350A1.000,843A1.000 | M | - | | 10/07 ▸ | 51738357 | 696106 |
| 1.3 MJTD 16V | 350/AXB1A/AXG1A | D | 1248 | 188A9.000,199A3.000 | M | +/- | | 10/07 ▸ | 51760613 | |
| 1.9 JTD | 350AXC1A | D | 1910 | 188B2.000 | M | +/- | | 10/07 ▸ | 51752062 | |
| **Y IPSILON (95>2000)** | | | | | | | | | | |
| 1.1 i | 840AE1A | E | 1108 | 176B2.000 | M | + | C | 04/97 ▸ | 46479331 | |
| 1.1 i | 840AE1A | E | 1108 | 176B2.000 | M | | C | 04/97 ▸ 08/00 | 7741200 | 698179 |
| 1.2 i,1.2 i 16V | 840/AA/AA1A/AD1A | E | 1242 | 176B9.000,840A3.000 | M | + | C | 11/95 ▸ 10/97 | 46550716 | |
| 1.2 i,1.2 i 16V | 840/AA/AA1A/AD1A | E | 1242 | 176B9.000,840A3.000 | M | | C | 04/97 ▸ 08/00 | 46465018 | 698178 |
| 1.2 i<br>3048411 ▸ | 840AA1AA | E | 1242 | 840A3.000 | A | | C | 1997 ▸ 08/00 | 46465018 | 698178 |
| 1.2 i<br>▸ 3048410 | 840/AA/AA1A | E | 1242 | 840A3.000 | M | | C | 11/95 ▸ 1997 | 46427347 | 698178 |
| 1.2 i<br>▸ 3048410 | 840AA1AA | E | 1242 | 840A3.000 | A | | C | 11/95 ▸ 1997 | 46427347 | 698178 |
| 1.4 i<br>3048411 ▸ | 840/AB1A/AC1A | E | 1370 | 840A2.000,840A4.000 | M | | C | 1997 ▸ 08/00 | 46465018 | 698178 |
| 1.4 i | 840/AB1A/AC1A | E | 1370 | 840A2.000,840A4.000 | M | | C | 11/95 ▸ 1997 | 46427347 | 698178 |
| **Y IPSILON (2000>2003)** | | | | | | | | | | |
| 1.2 i,1.2 i 16V | 840/AF1A/AG1A | E | 1242 | 188A4.000,188A5.000 | M | + | C | 09/00 ▸ 09/03 | 46763326 | |
| 1.2 i,1.2 i 16V | 840/AF1A/AG1A | E | 1242 | 188A4.000,188A5.000 | M | - | C | 09/00 ▸ 09/03 | 46763323 | |
| **Y IPSILON (2003>)** | | | | | | | | | | |
| 1.2 i,1.2 i 16V | 843/AXA1A/AXB1A | E | 1242 | 188A4.000,188A5.000 | M | + | | 10/03 ▸ | 51708405 | 696104 |
| 1.2 i 16V | 843AXB1A | E | 1242 | 188A5.000 | M | - | | 10/03 ▸ | 46745045 | 696106 |
| 1.2 i | 843AXA1A | E | 1242 | 188A4.000 | M | | | 10/03 ▸ | 46745045 | 696106 |
| **Y10** | | | | | | | | | | |
| 1.0,1.0 ie | 156/AA53W/AE53W | E | 999 | 156A2.000,156A2.246 | M | | C | 01/89 ▸ 09/92 | 46542854 | 696095 |
| 1.0,1.0 ie | 156/AA53A/AD53A AE53A | E | 999 | 156A2.000,156A2.100,156A2.246 | M | | C | 01/89 ▸ 09/92 | 46542852 | 696095 |
| 1.0,1.0 ie | 156/AA53W/AE53W | E | 999 | 156A2.000,156A2.246 | M | | C | 01/89 ▸ 09/92 | 7602723 | 696095 |
| 1.1 ie | 156/AG53A/AG53F AH53A/AH53W/BG53A/BH53A/CG53A | E | 1108 | 156C.046,176B2.000 | M | - | C | 09/92 ▸ 10/95 | 7753662 | 696095 |
| 1.1 ie | 156/AC53A/AG53A | E | 1108 | 156C.000,156C.046 | M | | | 01/89 ▸ 09/92 | 46542852 | 696095 |
| 1.1 ie | 156AC53W | E | 1108 | 156C.000 | M | | C | 01/89 ▸ 09/92 | 7602723 | 696095 |
| 1.1 ie | 156/AC53W/AG53W | E | 1108 | 156C.000,156C.046 | M | | C | 01/89 ▸ 09/92 | 46542854 | 696095 |
| 1.1 ie | 156/AG53A/AG53W | E | 1108 | 156C.046 | M | | C | 05/89 ▸ 09/92 | 7753662 | 696095 |
| 1.1 ie | 156/AG13A/AH13A | E | 1108 | 156C.046,176B2.000 | A | - | | 09/92 ▸ 10/95 | 7753662 | 696095 |
| 1.1 ie | 156/AC13A/AG13A | E | 1108 | 156C.000,156C.046 | A | | C | 11/89 ▸ 09/92 | 46542852 | 696095 |
| 1.1 ie | 156AG13A | E | 1108 | 156C.046 | A | | C | 11/89 ▸ 09/92 | 7753662 | 696095 |

| Type Ctr. | | CC | | AC | | | OE | Valeo | |
|---|---|---|---|---|---|---|---|---|---|
| **LANCIA** (.../...) | | | | | | | | | |
| **Y10 (.../...)** | | | | | | | | | |
| 1.3 ie 156AF53A | E | 1297 | 146A5.046 | M | +/- | | 09/92 ▸ 10/95 | 7753661 | **696095** |
| **MERCEDES** | | | | | | | | | |
| **A CLASS (168) (97>2003)** | | | | | | | | | |
| A140 i 168/.031/.131 | E | 1397 | 166.940 | M | + | | 05/97 ▸ 06/04 | 1685000593 | **696130** |
| A140 i 168/.031/.131 | E | 1397 | 166.940 | M | - | | 05/97 ▸ 06/04 | 1685000293 | **696129** |
| A140 i 168/.031/.131 | E | 1397 | 166.940 | A | + | | 10/97 ▸ 06/04 | 1685000593 | **696130** |
| A140 i 168/.031/.131 | E | 1397 | 166.940 | A | - | | 10/97 ▸ 06/04 | 1685000293 | **696129** |
| A160 i 168/.033/.133 | E | 1598 | 166.960 | M | + | | 05/97 ▸ 06/04 | 1685000593 | **696130** |
| A160 i 168/.033/.133 | E | 1598 | 166.960 | M | - | | 05/97 ▸ 06/04 | 1685000293 | **696129** |
| A160 i 168/.033/.133 | E | 1598 | 166.960 | A | + | | 10/97 ▸ 06/04 | 1685000593 | **696130** |
| A160 i 168/.033/.133 | E | 1598 | 166.960 | A | - | | 10/97 ▸ 06/04 | 1685000293 | **696129** |
| A190 i 168/.032/.132 | E | 1898 | 166.990 | M | + | | 04/99 ▸ 06/04 | 1685000593 | **696130** |
| A190 i 168/.032/.132 | E | 1898 | 166.990 | A | + | | 04/99 ▸ 06/04 | 1685000593 | **696130** |
| A210 i 168/.035/.135 | E | 2084 | 166.995 | M | + | | 01/02 ▸ 06/04 | 1685000593 | **696130** |
| A210 i 168/.035/.135 | E | 2084 | 166.995 | A | + | | 01/02 ▸ 06/04 | 1685000593 | **696130** |
| A160CDI CDI,A170CDI CDI 168/.006/.007/.008 .009/.109 | D | 1689 | 668.940,668.941,668.942 | M | - | | 05/98 ▸ 06/04 | 1685000293 | **696129** |
| A160CDI CDI,A170CDI CDI 168/.006/.007/.008 .009/.109 | D | 1689 | 668.940,668.941,668.942 | A | - | | 05/98 ▸ 06/04 | 1685000293 | **696129** |
| **B CLASS (2005>2008)** | | | | | | | | | |
| B150 i 245.231 | E | 1498 | 266.920 | M | | | 05/05 ▸ 03/08 | 1685000593 | **696130** |
| B150 i 245.231 | E | 1498 | 266.920 | A | | | 05/05 ▸ 03/08 | 1685000593 | **696130** |
| B170 i 245.232 | E | 1699 | 266.940 | M | | | 05/05 ▸ 03/08 | 1685000593 | **696130** |
| B170 i 245.232 | E | 1699 | 266.940 | A | | | 05/05 ▸ 03/08 | 1685000593 | **696130** |
| B200 i 245/.233/.234 | E | 2034 | 266.960,266.980 | M | | | 05/05 ▸ 03/08 | 1685000593 | **696130** |
| B200 i 245/.233/.234 | E | 2034 | 266.960,266.980 | A | | | 05/05 ▸ 03/08 | 1685000593 | **696130** |
| B180 CDi,B200 CDi 245/.207/.208 | D | 1991 | 640.940,640.941 | M | | | 05/05 ▸ 03/08 | 1685000593 | **696130** |
| B180 CDi,B200 CDi 245/.207/.208 | D | 1991 | 640.940,640.941 | A | | | 05/05 ▸ 03/08 | 1685000593 | **696130** |
| **C CLASS (202) (93>2001)** | | | | | | | | | |
| 1.8 i 202/.018/.078 F483848 ▸ | E | 1799 | 111.921 | M | + | C | ▸ 02/01 | 0005401588 | |
| 1.8 i 202/.018/.078 A436536, F483848 ▸ | E | 1799 | 111.921 | A | + | C | ▸ 02/01 | 0005401588 | |
| 1.8 i 202/.018/.078 ▸ A436535, F483847 | E | 1799 | 111.921 | M | + | Right/Droite | 03/93 ▸ | 0015001393 | **696063** |
| 1.8 i 202/.018/.078 ▸ A436535, F483847 | E | 1799 | 111.921 | M | + | Left/gauche | 03/93 ▸ | 0015001293 | **696062** |
| 1.8 i 202/.018/.078 ▸ A436535, F483847 | E | 1799 | 111.921 | A | + | Right/Droite | 03/93 ▸ | 0015001393 | **696063** |
| 1.8 i 202/.018/.078 ▸ F483847, A436535 | E | 1799 | 111.921 | A | + | Left/gauche | 03/93 ▸ | 0015001293 | **696062** |
| 2.0 i 202/.020/.080 A436535, A436536 ▸ | E | 1998 | 111.945 | M | + | C | ▸ 02/01 | 0005401588 | |
| 2.0 i 202/.020/.080 F483848, A436535 ▸ | E | 1998 | 111.945 | A | + | C | ▸ 02/01 | 0005401588 | |
| 2.0 i 202/.020/.025/.080/.082 | E | 1998 | 111.944,111.945 | A | + | Left/gauche | 01/94 ▸ | 0015001293 | **696062** |
| 2.0 i 202/.020/.025/.080/.082 ▸ A436535, F483847 | E | 1998 | 111.944,111.945 | M | + | Left/gauche | 01/94 ▸ | 0015001293 | **696062** |
| 2.0 i 202/.020/.025/.080/.082 ▸ A436535, F483847 | E | 1998 | 111.944,111.945 | M | + | Right/Droite | 01/94 ▸ | 0015001393 | **696063** |
| 2.0 i 202/.020/.025/.080/.082 ▸ F483847, A436535 | E | 1998 | 111.944,111.945 | A | + | Right/Droite | 01/94 ▸ | 0015001393 | **696063** |
| 2.2 i 202.022 | E | 2199 | 111.961 | M | + | Left/gauche | 03/93 ▸ 03/00 | 0015001293 | **696062** |
| 2.2 i 202.022 | E | 2199 | 111.961 | M | + | Right/Droite | 03/93 ▸ 03/00 | 0015001393 | **696063** |
| 2.2 i 202.022 | E | 2199 | 111.961 | A | + | Left/gauche | 03/93 ▸ 03/00 | 0015001293 | **696062** |
| 2.2 i 202.022 | E | 2199 | 111.961 | A | + | Right/Droite | 03/93 ▸ 03/00 | 0015001393 | **696063** |
| 2.3 i 202/.023/.083 | E | 2295 | 111.974 | M | + | C | 08/95 ▸ 02/01 | 0005401588 | |
| 2.3 i 202/.024/.085 | E | 2295 | 111.975 | M | + | Right/Droite | 09/95 ▸ 02/01 | 0015001393 | **696063** |
| 2.3 i 202/.024/.085 | E | 2295 | 111.975 | M | + | Left/gauche | 09/95 ▸ 02/01 | 0015001293 | **696062** |
| 2.3 i 202/.023/.083 | E | 2295 | 111.974 | A | + | C | 08/95 ▸ 02/01 | 0005401588 | |
| 2.3 i 202/.024/.085 | E | 2295 | 111.975 | A | + | Left/gauche | 09/95 ▸ 02/01 | 0015001293 | **696062** |
| 2.3 i 202/.024/.085 | E | 2295 | 111.975 | A | + | Right/Droite | 09/95 ▸ 02/01 | 0015001393 | **696063** |
| 2.4 i,2.4 i V6 202/.026/.086 F758208 ▸ | E | 2398 | 112.910 | M | + | C | ▸ 02/01 | 0005401688 | |

Fan System Groupe moto-ventilateur Lüftersystem Gruppo Motoventilatore Fan-systeem Fan sistemi
Grupo motorventilador Модуль вентилятора ventilátor rendszer Modul sahary Modul ventilator Σύστημα ανεμιστήρα



• **New** Nouveau **Nuevo** Novo **Nuovo** Nieuw **Neu** Nowość **Yeni** Новый Νέο **Novy**

## C CLASS (202) (93>2001) (.../...)

| | | | CC | | AC | | | | OE | Valeo |
|---|---|---|---|---|---|---|---|---|---|---|
| 2.4 i,2.4 i V6 F758208 ▶ | 202/.026/.086 | E | 2398 | 112.910 | M | + | C | ▶ 02/01 | 0005401588 | |
| 2.4 i,2.4 i V6 F758208 ▶ | 202/.026/.086 | E | 2398 | 112.910 | A | + | C | ▶ 02/01 | 0005401688 | |
| 2.4 i,2.4 i V6 F758208 ▶ | 202/.026/.086 | E | 2398 | 112.910 | A | + | C | ▶ 02/01 | 0005401588 | |
| 2.4 i,2.4 i V6 ▶ F758207 | 202/.026/.086 | E | 2398 | 112.910 | M | + | Left/gauche | 06/97 ▶ | 0015001293 | **696062** |
| 2.4 i,2.4 i V6 ▶ F758207 | 202/.026/.086 | E | 2398 | 112.910 | M | + | Right/Droite | 06/97 ▶ | 0015001393 | **696063** |
| 2.4 i,2.4 i V6 ▶ F758207 | 202/.026/.086 | E | 2398 | 112.910 | A | + | Right/Droite | 06/97 ▶ | 0015001393 | **696063** |
| 2.4 i,2.4 i V6 ▶ F758207 | 202/.026/.086 | E | 2398 | 112.910 | A | + | Left/gauche | 06/97 ▶ | 0015001293 | **696062** |
| 2.6 i V6 | 202.088 | E | 2597 | 112.915 | M | + | C | 04/00 ▶ 02/01 | 0005401588 | |
| 2.6 i V6 | 202.088 | E | 2597 | 112.915 | A | + | C | 04/00 ▶ 02/01 | 0005401588 | |
| 2.8 i F758208 ▶ | 202/.029/.089 | E | 2799 | 112.920 | M | + | C | ▶ 02/01 | 0005401688 | |
| 2.8 i 483848 ▶ | 202.029 | E | 2799 | 112.920 | M | + | C | ▶ 03/00 | 0005401588 | |
| 2.8 i | 202/.028/.029/.089 | E | 2799 | 104.941,112.920 | M | + | Left/gauche | 05/93 ▶ | 0015001293 | **696062** |
| 2.8 i 483848 ▶ | 202.029 | E | 2799 | 112.920 | A | + | C | ▶ 03/00 | 0005401588 | |
| 2.8 i F758208 ▶ | 202/.029/.089 | E | 2799 | 112.920 | A | + | C | ▶ 02/01 | 0005401688 | |
| 2.8 i ▶ F758207 | 202/.028/.029/.089 | E | 2799 | 104.941,112.920 | M | + | Right/Droite | 05/93 ▶ | 0015001393 | **696063** |
| 2.8 i ▶ F758207 | 202/.028/.029/.089 | E | 2799 | 104.941,112.920 | A | + | Left/gauche | 05/93 ▶ | 0015001293 | **696062** |
| 2.8 i ▶ F758207 | 202/.028/.029/.089 | E | 2799 | 104.941,112.920 | A | + | Right/Droite | 05/93 ▶ | 0015001393 | **696063** |
| 3.6 i | 202.028 | E | 3606 | C36AMG | | + | Right/Droite | 09/94 ▶ 03/00 | 0015001393 | **696063** |
| 3.6 i ▶ 483847 | 202.028 | E | 3606 | C36AMG | | + | Left/gauche | 09/94 ▶ 03/00 | 0015001293 | **696062** |
| 4.3 i,4.3 i V8 | 202/.033/.093 | E | 4266 | 113.944 | A | + | Left/gauche | 10/97 ▶ 02/01 | 0015001293 | **696062** |
| 4.3 i,4.3 i V8 | 202/.033/.093 | E | 4266 | 113.944 | A | + | Right/Droite | 10/97 ▶ 02/01 | 0015001393 | **696063** |
| 2.0 D | 202.120 | D | 1997 | 601.913 | M | + | Left/gauche | 03/93 ▶ 03/00 | 0015001293 | **696062** |
| 2.0 D | 202.120 | D | 1997 | 601.913 | M | + | Right/Droite | 03/93 ▶ 03/00 | 0015001393 | **696063** |
| 2.0 D | 202.120 | D | 1997 | 601.913 | A | + | Left/gauche | 03/93 ▶ 03/00 | 0015001293 | **696062** |
| 2.0 D | 202.120 | D | 1997 | 601.913 | A | + | Right/Droite | 03/93 ▶ 03/00 | 0015001393 | **696063** |
| 2.0 D | 202/.122/.180 | D | 1998 | 604.915 | M | + | Left/gauche | 03/93 ▶ 02/01 | 0015001293 | **696062** |
| 2.0 D | 202/.122/.180 | D | 1998 | 604.915 | M | + | Right/Droite | 03/93 ▶ 02/01 | 0015001393 | **696063** |
| 2.0 D | 202/.122/.180 | D | 1998 | 604.915 | A | + | Left/gauche | 03/93 ▶ 02/01 | 0015001293 | **696062** |
| 2.0 D | 202/.122/.180 | D | 1998 | 604.915 | A | + | Right/Droite | 03/93 ▶ 02/01 | 0015001393 | **696063** |
| 2.2 CDI | 202/.133/.134/.193 .194 | D | 2151 | 611.960,611.960A | M | + | C | 03/98 ▶ 02/01 | 0005401688 | |
| 2.2 CDI | 202/.133/.134/.193 .194 | D | 2151 | 611.960,611.960A | A | + | C | 03/98 ▶ 02/01 | 0005401688 | |
| 2.2 D | 202/.121/.182 | D | 2155 | 604.910 | M | + | Right/Droite | 08/93 ▶ 02/01 | 0015001393 | **696063** |
| 2.2 D | 202/.121/.182 | D | 2155 | 604.910 | M | + | Left/gauche | 08/93 ▶ 02/01 | 0015001293 | **696062** |
| 2.2 D | 202/.121/.182 | D | 2155 | 604.910 | A | + | Right/Droite | 08/93 ▶ 02/01 | 0015001393 | **696063** |
| 2.2 D | 202/.121/.182 | D | 2155 | 604.910 | A | + | Left/gauche | 08/93 ▶ 02/01 | 0015001293 | **696062** |
| 2.5 D,2.5 TD | 202/.125/.128/.188 | D | 2497 | 605.910,605.960 | M | + | Left/gauche | 05/93 ▶ 02/01 | 0015001293 | **696062** |
| 2.5 D,2.5 TD | 202/.125/.128/.188 | D | 2497 | 605.910,605.960 | M | + | Right/Droite | 05/93 ▶ 02/01 | 0015001393 | **696063** |
| 2.5 D,2.5 TD | 202/.125/.128/.188 | D | 2497 | 605.910,605.960 | A | + | Right/Droite | 05/93 ▶ 02/01 | 0015001393 | **696063** |
| 2.5 D,2.5 TD | 202/.125/.128/.188 | D | 2497 | 605.910,605.960 | A | + | Left/gauche | 05/93 ▶ 02/01 | 0015001293 | **696062** |

## C CLASS (203) (2000>2003)

| | | | | | | | | | | |
|---|---|---|---|---|---|---|---|---|---|---|
| 1.8 CGI 16V,1.8 i 16V | 203/.042/.043/.046 .240/.242/.243/.246/.740/.742/.746 | E | 1796 | 271.940,271.942,271.946 271.948 | M | | | 06/02 ▶ 12/03 | 2035000293 | |
| 1.8 CGI 16V,1.8 i 16V | 203/.042/.043/.046 .240/.242/.243/.246/.740/.742/.746 | E | 1796 | 271.940,271.942,271.946 271.948 | A | | | 06/02 ▶ 12/03 | 2035000293 | |
| 2.0 i | 203/.035/.045/.235/.245/.735/.745 | E | 1998 | 111.951,111.955 | M | | | 04/00 ▶ 12/03 | 2035000293 | |
| 2.0 i | 203/.035/.045/.235/.245/.735/.745 | E | 1998 | 111.951,111.955 | A | | | 04/00 ▶ 12/03 | 2035000293 | |
| 2.3 i | 203.747 | E | 2295 | 111.981 | M | | | 09/00 ▶ 12/03 | 2035000293 | |
| 2.3 i | 203.747 | E | 2295 | 111.981 | A | | | 09/00 ▶ 12/03 | 2035000293 | |
| 2.6 i V6 18V | 203/.061/.261 | E | 2597 | 112.912 | M | | | 04/00 ▶ 12/03 | 2035000293 | |
| 2.6 i V6 18V | 203/.061/.081/.261 .281 | E | 2597 | 112.912,112.916 | A | | | 04/00 ▶ 12/03 | 2035000293 | |
| 3.2 i V6 18V | 203.764 | E | 3199 | 112.946 | M | | | 09/02 ▶ 12/03 | 2035000293 | |

# MERCEDES (.../...)

## C CLASS (203) (2000>2003) (.../...)

| | | | CC | | AC | | | OE | Valeo | |
|---|---|---|---|---|---|---|---|---|---|---|
| 3.2 i V6,3.2 i V6 18V | 203/.064/.065/.084 .264/.265/.284/.764 | E | 3199 | 112.946,112.953,112.961 | A | | | 04/00 ▸ 12/03 | 2035000293 | |
| 2.1 CDI,2.1 CDI 16V | 203/.004/.006/.007 .204/.206/.207/.208/.706 | D | 2148 | 611.962,646.962,646.963 | M | | | 04/00 ▸ 12/03 | 2035000293 | |
| 2.1 CDI,2.1 CDI 16V | 203/.004/.006/.007 .204/.206/.207/.208/.706 | D | 2148 | 611.962,646.962,646.963 | A | | | 04/00 ▸ 12/03 | 2035000293 | |
| 2.7 CDI | 203/.016/.216 | D | 2685 | 612.962 | M | | | 08/00 ▸ 12/03 | 2035000293 | |
| 2.7 CDI | 203/.016/.216 | D | 2685 | 612.962 | A | | | 08/00 ▸ 12/03 | 2035000293 | |
| 3.0 CDI 20V | 203/.018/.218/.718 | D | 2950 | 612.990 | A | | | 09/02 ▸ 12/03 | 2035000293 | |

## C CLASS (203) (2004>)

| | | | CC | | AC | | | OE | Valeo | |
|---|---|---|---|---|---|---|---|---|---|---|
| C180 i,C200 i,C200CGI CGI C220CGI CGI,C230 i ▸ A649999, R153498 | 203/.040/.042/.043 .046/.240/.242/.243 .246/.740/.742/.743/.746 | E | 1796 | 271.940,271.942,271.946 271.948 | A | | | 01/04 ▸ 06/04 | 2035000293 | |
| C180 i,C200 i,C200CGI CGI C220CGI CGI,C230 i ▸ F593966, A649999 | 203/.040/.042/.043 .046/.240/.242/.243 .246/.740/.742/.743/.746 | E | 1796 | 271.940,271.942,271.946 271.948 | M | | | 01/04 ▸ 06/04 | 2035000293 | |
| C240 i ▸ F593966, R153498 | 203/.081/.281 | E | 2597 | 112.916 | A | | | 01/04 ▸ 06/04 | 2035000293 | |
| C320 i ▸ A649999 | 203.764 | E | 3199 | 112.946 | M | | | 01/04 ▸ 04/04 | 2035000293 | |
| C320 i ▸ A649999, F593966 | 203/.084/.284/.764 | E | 3199 | 112.946,112.953 | A | | | 01/04 ▸ 05/04 | 2035000293 | |
| C55AMG i ▸ R153498 | 203/.076/.276 | E | 5439 | 113.988 | A | | | 01/04 ▸ 06/04 | 2035000293 | |
| C200CDI CDI,C220CDI CDI ▸ F593966, R153498 | 203/.007/.008/.207 .208/.707/.708 | D | 2148 | 646.962,646.963 | M | | | 01/04 ▸ 06/04 | 2035000293 | |
| C200CDI CDI,C220CDI CDI ▸ R153498, F593966 | 203/.007/.008/.207 .208/.707/.708 | D | 2148 | 646.962,646.963 | A | | | 01/04 ▸ 06/04 | 2035000293 | |
| C270CDI CDI ▸ F593966 | 203.016 | D | 2685 | 612.962 | M | | | 01/04 ▸ 05/04 | 2035000293 | |
| C270CDI CDI ▸ R153498 | 203.016 | D | 2685 | 612.962 | A | | | 01/04 ▸ 06/04 | 2035000293 | |
| C30CDI CDI | 203/.018/.218/.718 | D | 2950 | 612.990 | A | | | 01/04 ▸ 02/08 | 2035000293 | |

## C CLASS (204) (2007>)

| | | | CC | | AC | | | OE | Valeo | |
|---|---|---|---|---|---|---|---|---|---|---|
| 1.6 BE 16V,1.6 i 16V | 204/.044/.045/.245 | E | 1597 | 271.910 | M | + | | 04/08 ▸ 02/11 | 2045000293 | •696380 |
| 1.6 BE 16V,1.6 i 16V | 204/.044/.045 | E | 1597 | 271.910 | A | + | | 04/08 ▸ 02/11 | 2045000293 | •696380 |
| 1.8 i 16V | 204/.041/.046/.241 .246 | E | 1796 | 271.950,271.952 | M | + | | 01/07 ▸ 02/11 | 2045000293 | •696380 |
| 1.8 i 16V | 204/.041/.046/.241 .246 | E | 1796 | 271.950,271.952 | A | + | | 01/07 ▸ 02/11 | 2045000293 | •696380 |
| 2.5 i V6 24V | 204/.052/.085/.252 | E | 2496 | 272.911,272.921 | M | + | | 01/07 ▸ 02/11 | 2045000293 | •696380 |
| 2.5 i V6 24V | 204/.052/.085/.252 | E | 2496 | 272.911,272.921 | A | + | | 01/07 ▸ 02/11 | 2045000293 | •696380 |
| 3.0 i V6 24V | 204/.054/.254 | E | 2996 | 272.947 | M | + | | 01/07 ▸ 02/11 | 2045000293 | •696380 |
| 3.0 i V6 24V | 204/.054/.081/.254 | E | 2996 | 272.947,272.948 | A | + | | 01/07 ▸ 02/11 | 2045000293 | •696380 |
| 3.5 CGI BE V6 24V 3.5 i V6 24V | 204/.056/.065/.087 .256 | E | 3498 | 272.961,272.971,272.982 | A | + | | 01/07 ▸ 02/11 | 2045000293 | •696380 |
| 6.2 i V8 32V | 204/.077/.277 | E | 6208 | 156.985 | A | + | | 10/07 ▸ 02/11 | 2045000293 | •696380 |
| 2.15 CDI BE 16V | 204.003 | D | 2143 | 651.911 | M | + | | 10/08 ▸ 02/11 | 2045000293 | •696380 |
| 2.15 CDI BE 16V | 204.003 | D | 2143 | 651.911 | A | + | | 10/08 ▸ 02/11 | 2045000293 | •696380 |
| 2.15 CDI 16V 2.15 CDI BE 16V | 204/.006/.007/.008 .207/.208 | D | 2148 | 646.811,646.812 | M | + | | 01/07 ▸ 02/11 | 2045000293 | •696380 |
| 2.15 CDI 16V 2.15 CDI BE 16V | 204/.006/.007/.008 .207/.208 | D | 2148 | 646.811,646.812 | A | + | | 01/07 ▸ 02/11 | 2045000293 | •696380 |
| 3.0 CDI V6 24V | 204/.022/.222 | D | 2987 | 642.960 | M | + | | 05/07 ▸ 02/11 | 2045000293 | •696380 |
| 3.0 CDI V6 24V | 204/.022/.089/.222 .289 | D | 2987 | 642.960,642.961 | A | + | | 05/07 ▸ 02/11 | 2045000293 | •696380 |

## CLK (208) (97>2003)

| | | | CC | | AC | | | OE | Valeo | |
|---|---|---|---|---|---|---|---|---|---|---|
| CLK200K i | 208/.345/.445 | E | 1998 | 111.944 | M | +/- | C | 06/97 ▸ 06/00 | 0005401688 | |
| CLK200 i | 208/.335/.435 | E | 1998 | 111.945 | M | + | C | 06/97 ▸ 01/03 | 0005401588 | |
| CLK200K i | 208/.345/.445 | E | 1998 | 111.944 | M | + | Left/gauche | 06/97 ▸ 06/00 | 0015001293 | 696062 |
| CLK200K i | 208.344 | E | 1998 | 111.956 | M | + | C | 06/99 ▸ 02/02 | 0005401688 | |
| CLK200K i | 208/.345/.445 | E | 1998 | 111.944 | M | | Right/Droite | 06/97 ▸ 06/00 | 0015001393 | 696063 |
| CLK200K i | 208/.345/.445 | E | 1998 | 111.944 | A | +/- | C | 06/97 ▸ 06/00 | 0005401688 | |

Fan System Groupe moto-ventilateur Lüftersystem Gruppo Motoventilatore Fan-systeem Fan sistemi
Grupo motorventilador Модуль вентилятора ventilátor rendszer Modul sahary Modul ventilator Σύστημα ανεμιστήρα



• **New** Nouveau **Nuevo** Novo **Nuovo** Nieuw **Neu** Nowość **Yeni** Новый Νέο **Novy**

## CLK (208) (97>2003) (.../...)

| | | | CC | | | AC | | | OE | Valeo | |
|---|---|---|---|---|---|---|---|---|---|---|---|
| CLK200K i | 208/.345/.445 | E | 1998 | 111.944 | A | + | Left/gauche | 06/97 ▸ 06/00 | 0015001293 | 696062 | |
| CLK200 i | 208/.335/.435 | E | 1998 | 111.945 | A | + | C | 06/97 ▸ 01/03 | 0005401588 | | |
| CLK200K i | 208.344 | E | 1998 | 111.956 | A | + | C | 06/99 ▸ 02/02 | 0005401688 | | |
| CLK200K i | 208/.345/.445 | E | 1998 | 111.944 | A | | Right/Droite | 06/97 ▸ 06/00 | 0015001393 | 696063 | |
| CLK230K i | 208/.347/.447 | E | 2295 | 111.975 | M | +/- | C | 06/97 ▸ 01/03 | 0005401688 | | |
| CLK230K i | 208/.347/.447 | E | 2295 | 111.975 | M | + | Left/gauche | 06/97 ▸ 01/03 | 0015001293 | 696062 | |
| CLK230K i | 208/.348/.448 | E | 2295 | 111.982 | M | + | C | 04/00 ▸ 01/03 | 0005401688 | | |
| CLK230K i | 208/.347/.447 | E | 2295 | 111.975 | M | | Right/Droite | 06/97 ▸ 01/03 | 0015001393 | 696063 | |
| CLK230K i | 208/.347/.447 | E | 2295 | 111.975 | A | +/- | C | 06/97 ▸ 01/03 | 0005401688 | | |
| CLK230K i | 208/.347/.447 | E | 2295 | 111.975 | A | + | Left/gauche | 06/97 ▸ 01/03 | 0015001293 | 696062 | |
| CLK230K i | 208/.348/.448 | E | 2295 | 111.982 | A | + | C | 04/00 ▸ 01/03 | 0005401688 | | |
| CLK230K i | 208/.347/.447 | E | 2295 | 111.975 | A | | Right/Droite | 06/97 ▸ 01/03 | 0015001393 | 696063 | |
| CLK320 i | 208/.365/.465 | E | 3199 | 112.940 | A | +/- | C | 06/97 ▸ 01/03 | 0005401688 | | |
| CLK430 i | 208/.370/.470 | E | 4266 | 113.943 | A | + | Left/gauche | 06/98 ▸ 01/03 | 0015001293 | 696062 | |
| CLK430 i | 208/.370/.470 | E | 4266 | 113.943 | A | | Right/Droite | 06/98 ▸ 01/03 | 0015001393 | 696063 | |
| CLK55 i | 208.374 | E | 5439 | 113.984 | A | + | Left/gauche | 06/99 ▸ 02/02 | 0015001293 | 696062 | |
| CLK55 i | 208.374 | E | 5439 | 113.984 | A | | Right/Droite | 06/99 ▸ 02/02 | 0015001393 | 696063 | |

## E CLASS (210)

| | | | | | | | | | | | |
|---|---|---|---|---|---|---|---|---|---|---|---|
| E200 i,E200L i<br>J024802, A177064 ▸ | 210/.035/.045/.048<br>.235/.245/.248 | E | 1998 | 111.942,111.947,111.957 | M | + | C | ▸ 03/03 | 0015003593 | | |
| E200 i | 210/.035/.235 | E | 1998 | 111.942 | M | + | C | 04/95 ▸ 03/03 | 0015001693 | | |
| E200 i,E200L i | 210/.035/.045/.048<br>.245/.248 | E | 1998 | 111.942,111.947,111.957 | M | + | C | 04/95 ▸ 03/03 | 0005401588 | | |
| E200 i | 210/.035/.235 | E | 1998 | 111.942 | M | - | Left/gauche | 04/95 ▸ 03/03 | 0015001293 | 696062 | |
| E200 i | 210/.035/.235 | E | 1998 | 111.942 | M | - | Right/Droite | 04/95 ▸ 03/03 | 0015001393 | 696063 | |
| E200 i,E200L i<br>J024802, A177064 ▸ | 210/.035/.045/.048<br>.235/.245/.248 | E | 1998 | 111.942,111.947,111.957 | A | + | C | ▸ 03/03 | 0015003593 | | |
| E200 i | 210/.035/.235 | E | 1998 | 111.942 | A | + | C | 04/95 ▸ 03/03 | 0015001693 | | |
| E200 i,E200L i | 210/.035/.045/.048<br>.245/.248 | E | 1998 | 111.942,111.947,111.957 | A | + | C | 04/95 ▸ 03/03 | 0005401588 | | |
| E200 i | 210/.035/.235 | E | 1998 | 111.942 | A | - | Right/Droite | 04/95 ▸ 03/03 | 0015001393 | 696063 | |
| E200 i | 210/.035/.235 | E | 1998 | 111.942 | A | - | Left/gauche | 04/95 ▸ 03/03 | 0015001293 | 696062 | |
| E200 i<br>▸ A177063 | 210/.035/.235 | E | 1998 | 111.942 | M | | | 04/95 ▸ | 0015001693 | | |
| E200 i<br>▸ J024801, A177063 | 210/.035/.235 | E | 1998 | 111.942 | A | | | 04/95 ▸ | 0015001693 | | |
| E230 i<br>A177064, J024802 ▸ | 210/.037/.237 | E | 2295 | 111.970 | M | + | C | ▸ 06/99 | 0015003593 | | |
| E230 i | 210/.037/.237 | E | 2295 | 111.970 | M | - | Right/Droite | 04/95 ▸ 03/97 | 0015001393 | 696063 | |
| E230 i | 210/.037/.237 | E | 2295 | 111.970 | M | - | Left/gauche | 04/95 ▸ 03/97 | 0015001293 | 696062 | |
| E230 i<br>J024802, A177064 ▸ | 210/.037/.237 | E | 2295 | 111.970 | A | + | C | ▸ 06/99 | 0015003593 | | |
| E230 i | 210.037 | E | 2295 | 111.970 | A | + | C | 04/95 ▸ 06/99 | 0015001693 | | |
| E230 i | 210/.037/.237 | E | 2295 | 111.970 | A | - | Right/Droite | 04/95 ▸ 06/99 | 0015001393 | 696063 | |
| E230 i | 210/.037/.237 | E | 2295 | 111.970 | A | - | Left/gauche | 04/95 ▸ 06/99 | 0015001293 | 696062 | |
| E230 i<br>▸ A177063 | 210/.037/.237 | E | 2295 | 111.970 | M | | | 04/95 ▸ | 0015001693 | | |
| E230 i<br>▸ J024801, A177063 | 210/.037/.237 | E | 2295 | 111.970 | A | | | 04/95 ▸ | 0015001693 | | |
| E240 i | 210/.061/.261 | E | 2398 | 112.911 | M | + | C | 04/95 ▸ 03/03 | 0005401588 | | |
| E240 i | 210/.061/.261 | E | 2398 | 112.911 | M | + | C | 04/95 ▸ 03/03 | 0015003593 | | |
| E240 i | 210/.061/.261 | E | 2398 | 112.911 | M | + | C | 04/95 ▸ 03/03 | 0015003893 | | |
| E240 i | 210/.061/.261 | E | 2398 | 112.911 | A | + | C | 04/95 ▸ 06/99 | 0015003893 | | |
| E240 i | 210/.061/.261 | E | 2398 | 112.911 | A | + | C | 04/95 ▸ 06/99 | 0015003593 | | |
| E240 i | 210/.061/.261 | E | 2398 | 112.911 | A | + | C | 04/95 ▸ 06/99 | 0005401588 | | |
| E240 i | 210/.062/.262 | E | 2597 | 112.914 | M | + | C | 06/99 ▸ 03/03 | 0015003593 | | |
| E240 i | 210.062 | E | 2597 | 112.914 | M | + | C | 06/99 ▸ 03/02 | 0015003893 | | |
| E240 i | 210/.062/.262 | E | 2597 | 112.914 | M | + | C | 06/99 ▸ 03/03 | 0005401588 | | |
| E240 i | 210.062 | E | 2597 | 112.914 | A | + | C | 06/99 ▸ 03/02 | 0015003893 | | |
| E240 i | 210/.062/.262 | E | 2597 | 112.914 | A | + | C | 06/99 ▸ 03/03 | 0005401588 | | |
| E240 i | 210/.062/.262 | E | 2597 | 112.914 | A | + | C | 06/99 ▸ 03/03 | 0015003593 | | |
| E280 i,E280L i | 210/.063/.663 | E | 2799 | 112.921 | M | + | C | 04/95 ▸ 03/02 | 0015003893 | | |
| E280 i,E280L i | 210/.063/.263/.663 | E | 2799 | 112.921 | M | + | C | 04/95 ▸ 03/03 | 0015003593 | | |
| E280 i,E280L i | 210/.063/.263/.663 | E | 2799 | 112.921 | M | + | C | 04/95 ▸ 03/03 | 0005401588 | | |
| E280 i | 210.053 | E | 2799 | 104.945 | M | | | 04/95 ▸ 06/99 | 0015001693 | | |
| E280L i | 210.663 | E | 2799 | 112.921 | M | | | 03/96 ▸ 06/99 | 0015003193 | | |

# MERCEDES (.../...)

## E CLASS (210) (.../...)

| | Type Ctr. | | CC | | AC | | | | OE | Valeo | |
|---|---|---|---|---|---|---|---|---|---|---|---|
| E280 i,E280L i | 210/.063/.081/.281 .663 | E | 2799 | 112.921 | A | + | C | 04/95 ▸ 03/02 | 0015003893 | | |
| E280 i,E280L i | 210/.063/.081/.263 .281/.663 | E | 2799 | 112.921 | A | + | C | 04/95 ▸ 03/03 | 0015003593 | | |
| E280 i,E280L i | 210/.063/.081/.263 .281/.663 | E | 2799 | 112.921 | A | + | C | 04/95 ▸ 03/03 | 0005401588 | | |
| E280 i | 210.053 | E | 2799 | 104.945 | A | + | C | 04/95 ▸ 06/99 | 0015001693 | | |
| E280 i | 210.053 | E | 2799 | 104.945 | A | | | 04/95 ▸ 06/99 | 0015001693 | | |
| E280 i,E280L i | 210/.081/.281/.663 | E | 2799 | 112.921 | A | | | 03/96 ▸ 06/99 | 0015003193 | | |
| E320 i | 210/.065/.082/.265 .282 | E | 3199 | 112.941 | A | + | C | 04/95 ▸ 03/03 | 0015003893 | | |
| E320 i | 210.055 | E | 3199 | 104.995 | A | + | C | 04/95 ▸ 06/99 | 0015001693 | | |
| E320 i | 210/.065/.082/.265 .282 | E | 3199 | 112.941 | A | + | C | 04/95 ▸ 03/03 | 0015003593 | | |
| E320 i | 210/.065/.082/.265 .282 | E | 3199 | 112.941 | A | + | C | 04/95 ▸ 03/03 | 0005401588 | | |
| E320 i | 210/.065/.265 | E | 3199 | 112.941 | A | | | 04/95 ▸ 06/99 | 0015003193 | | |
| E320 i | 210.055 | E | 3199 | 104.995 | A | | | 04/95 ▸ 06/99 | 0015001693 | | |
| E420 i | 210.072 | E | 4196 | 119.985 | A | + | C | 04/95 ▸ 09/97 | 0015001693 | | |
| E420 i | 210/.072/.272 | E | 4196 | 119.985 | A | | | 04/95 ▸ 06/99 | 0015001693 | | |
| E430 i | 210/.070/.083/.270 .283 | E | 4266 | 113.940 | A | + | C | 03/96 ▸ 03/03 | 0015003893 | | |
| E430 i | 210.283 | E | 4266 | 113.940 | A | + | C | 06/99 ▸ 03/03 | 0005401588 | | |
| E50 i | 210.072 | E | 4973 | 119.AMG | A | | | 03/96 ▸ 06/99 | 0015001693 | | |
| E55 i | 210/.074/.083/.274/.283 | E | 5439 | 113.980 | A | + | C | 03/96 ▸ 03/03 | 0015003893 | | |
| E55 i | 210.283 | E | 5439 | 113.980 | A | + | C | 03/01 ▸ 03/03 | 0005401588 | | |
| E200D D | 210.003 | D | 1998 | 604.917 | M | + | C | 04/95 ▸ 06/99 | 0015001693 | | |
| E200D D | 210.003 | D | 1998 | 604.917 | M | | | 04/95 ▸ 06/99 | 0015001693 | | |
| E200D D | 210.003 | D | 1998 | 604.917 | A | | | 04/95 ▸ 06/99 | 0015001693 | | |
| E200 CDI,E220 CDI | 210/.006/.007/.206 | D | 2148 | 611.961 | M | +/- | C | 03/96 ▸ 03/03 | 0005401688 | | |
| E200 CDI,E220 CDI | 210/.006/.007/.206 .606 | D | 2148 | 611.961 | A | +/- | C | 03/96 ▸ 03/03 | 0005401688 | | |
| E220D CDI | 210.007 | D | 2151 | 611.961 | M | +/- | C | 06/98 ▸ 03/02 | 0005401688 | | |
| E220D CDI | 210.007 | D | 2151 | 611.961 | A | +/- | C | 06/98 ▸ 03/02 | 0005401688 | | |
| E220D D | 210.004 | D | 2155 | 604.912 | M | + | C | 04/95 ▸ 06/99 | 0015001693 | | |
| E220D D | 210.004 | D | 2155 | 604.912 | M | | | 04/95 ▸ 06/99 | 0015001693 | | |
| E220D D | 210.004 | D | 2155 | 604.912 | A | + | C | 04/95 ▸ 06/99 | 0015001693 | | |
| E220D D | 210.004 | D | 2155 | 604.912 | A | | | 04/95 ▸ 06/99 | 0015001693 | | |
| E250D D,E250DL D | 210/.010/.210/.610 | D | 2497 | 605.912 | M | | | 04/95 ▸ 06/99 | 0015001693 | | |
| E250D D | 210.010 | D | 2497 | 605.912 | A | + | C | 04/95 ▸ 06/99 | 0015001693 | | |
| E250D D,E250DL D | 210/.010/.210/.610 | D | 2497 | 605.912 | A | | | 04/95 ▸ 06/99 | 0015001693 | | |
| E270 CDI | 210/.016/.216 | D | 2685 | 612.961 | M | +/- | C | 06/99 ▸ 03/03 | 0005401688 | | |
| E270 CDI | 210/.216/.616 | D | 2685 | 612.961 | A | +/- | C | 06/99 ▸ 03/03 | 0005401688 | | |
| E290TD TD,E290TDL TD | 210/.017/.217/.617 | D | 2874 | 602.982 | M | + | C | 04/95 ▸ 06/99 | 0015002493 | | |
| E290TD TD,E290TDL TD | 210/.017/.217/.617 | D | 2874 | 602.982 | A | + | C | 04/95 ▸ 06/99 | 0015002493 | | |
| E300D D | 210.020 | D | 2996 | 606.912 | M | | | 04/95 ▸ 06/99 | 0015001693 | | |
| E300D D | 210.020 | D | 2996 | 606.912 | A | + | C | 04/95 ▸ 06/99 | 0015001693 | | |
| E300D D | 210.020 | D | 2996 | 606.912 | A | | | 04/95 ▸ 06/99 | 0015001693 | | |

## E CLASS (211) (2002>2006)

| | | | | | | | | | | | |
|---|---|---|---|---|---|---|---|---|---|---|---|
| E 200 i | 211/.042/.242 | E | 1796 | 271.941 | M | + | | 09/02 ▸ 03/06 | 2115001693 | | |
| E 200 i | 211/.042/.242 | E | 1796 | 271.941 | A | + | | 09/02 ▸ 03/06 | 2115001693 | | |
| E 240 i | 211/.061/.261 | E | 2597 | 112.913 | M | + | | 03/02 ▸ 05/05 | 2115001693 | | |
| E 240 i | 211/.061/.080/.261 .280 | E | 2597 | 112.913,112.917 | A | + | | 03/02 ▸ 06/05 | 2115001693 | | |
| E 280 i | 211/.054/.254 | E | 2996 | 272.943 | M | + | | 06/05 ▸ 03/06 | 2115001693 | | |
| E 280 i | 211/.054/.092/.254 .292 | E | 2996 | 272.943,272.944 | A | + | | 06/05 ▸ 03/06 | 2115001693 | | |
| E 320 i | 211/.065/.082/.265 .282 | E | 3199 | 112.949,112.954 | A | + | | 03/02 ▸ 03/06 | 2115001693 | | |
| E 350 i | 211.056 | E | 3498 | 272.964 | M | + | | 07/04 ▸ 03/06 | 2115001693 | | |
| E 350 i | 211/.056/.087/.256 .287 | E | 3498 | 272.964,272.972 | A | + | | 07/04 ▸ 03/06 | 2115001693 | | |
| E 500 i | 211/.070/.083/.270 .283 | E | 4966 | 113.967,113.969 | A | + | | 03/02 ▸ 03/06 | 2115001693 | | |
| E 55 i | 211/.076/.276 | E | 5439 | 113.990 | A | + | | 07/02 ▸ 03/06 | 2115001693 | | |
| E 220 CDI | 211/.206/.606 | D | 2148 | 646.961 | M | + | | 03/02 ▸ 03/06 | 2115001693 | | |
| E 200 CDI,E 220 CDI | 211/.004/.006/.206 .606 | D | 2148 | 646.951,646.961 | M | | | 03/02 ▸ | 2115000693 | | |
| E 200 CDI,E 220 CDI | 211/.004/.006 | D | 2148 | 646.951,646.961 | M | | | 03/02 ▸ 03/06 | 2115001693 | | |

Fan System Groupe moto-ventilateur Lüftersystem Gruppo Motoventilatore Fan-systeem Fan sistemi
Grupo motorventilador Модуль вентилятора ventilátor rendszer Modul sahary Modul ventilator Σύστημα ανεμιστήρα



• **New** Nouveau **Nuevo** Novo **Nuovo** Nieuw **Neu** Nowość **Yeni** Новый Νέο **Novy**

| Type Ctr. | | CC | | | AC | | | OE | Valeo | |
|---|---|---|---|---|---|---|---|---|---|---|
| **MERCEDES (.../...)** | | | | | | | | | | |
| **E CLASS (211) (2002>2006) (.../...)** | | | | | | | | | | |
| E 220 CDI | 211/.206/.606 | D | 2148 | 646.961 | A | + | | 03/02 ▸ 03/06 | 2115001693 | |
| E 200 CDI,E 220 CDI | 211/.004/.006 | D | 2148 | 646.951,646.961 | A | | | 03/02 ▸ 03/06 | 2115001693 | |
| E 200 CDI,E 220 CDI | 211/.004/.006/.206 .606 | D | 2148 | 646.951,646.961 | A | | | 03/02 ▸ | 2115000693 | |
| E 270 CDI | 211/.216/.616 | D | 2685 | 647.961 | M | + | | 03/02 ▸ 05/05 | 2115001693 | |
| E 270 CDI | 211.016 | D | 2685 | 647.961 | M | | | 03/02 ▸ 05/05 | 2115001693 | |
| E 270 CDI | 211/.016/.216/.616 | D | 2685 | 647.961 | M | | | 03/02 ▸ | 2115000693 | |
| E 270 CDI | 211/.216/.616 | D | 2685 | 647.961 | A | + | | 03/02 ▸ 05/05 | 2115001693 | |
| E 270 CDI | 211.016 | D | 2685 | 647.961 | A | | | 03/02 ▸ 05/05 | 2115001693 | |
| E 270 CDI | 211/.016/.216/.616 | D | 2685 | 647.961 | A | | | 03/02 ▸ | 2115000693 | |
| E 280 CDI | 211/.020/.220 | D | 2987 | 642.920 | M | + | | 06/05 ▸ 03/06 | 2115001693 | |
| E 280 CDI,E 320 CDI | 211/.020/.022/.220 .222/.620 | D | 2987 | 642.920 | A | + | | 06/05 ▸ 03/06 | 2115001693 | |
| **E CLASS (211) (2006>2009)** | | | | | | | | | | |
| 1.8 i 16V | 211/.041/.241 | E | 1796 | 271.956 | M | + | | 04/06 ▸ 11/09 | 2115001693 | |
| 1.8 i 16V | 211/.041/.241 | E | 1796 | 271.956 | A | + | | 04/06 ▸ 11/09 | 2115001693 | |
| 5.4 i V8 32V | 211/.072/.090/.272 .290 | E | 5461 | 273.960,273.962 | A | + | | 04/06 ▸ 11/09 | 2115001693 | |
| 2.1 CDI 16V | 211/.007/.008/.208 | D | 2148 | 646.820,646.821 | M | + | | 04/06 ▸ 11/09 | 2115001693 | |
| 2.1 CDI 16V | 211/.007/.008/.208 .608 | D | 2148 | 646.820,646.821 | A | + | | 04/06 ▸ 11/09 | 2115001693 | |
| **S CLASS (220)** | | | | | | | | | | |
| S280 i,S280L i | 220/.063/.163 | E | 2799 | 112.922 | A | + | | 03/99 ▸ 09/04 | 2205000193 | |
| S280 i,S280L i | 220/.063/.163 | E | 2799 | 112.922 | A | + | | 03/99 ▸ 09/04 | 2205000093 | |
| S320 i,S320L i | 220/.065/.165 | E | 3199 | 112.944 | A | + | | 09/98 ▸ 09/04 | 2205000193 | |
| S320 i,S320L i | 220/.065/.165 | E | 3199 | 112.944 | A | + | | 09/98 ▸ 09/04 | 2205000093 | |
| S350 i,S350L i | 220/.067/.087/.167 .187 | E | 3724 | 112.972,112.975 | A | + | | 09/02 ▸ 09/04 | 2205000193 | |
| S430 i,S430L i | 220/.070/.170 | E | 4266 | 113.941 | A | + | | 09/98 ▸ 09/04 | 2205000093 | |
| S430 i,S430L i | 220/.070/.083/.170 .183 | E | 4266 | 113.941,113.948 | A | + | | 09/98 ▸ 09/04 | 2205000193 | |
| S500 i,S500L i | 220/.075/.084/.175 .184/.875 | E | 4966 | 113.960,113.966 | A | + | | 09/98 ▸ 09/04 | 2205000193 | |
| S500 i,S500L i | 220/.075/.175/.875 | E | 4966 | 113.960 | A | + | | 09/98 ▸ 09/04 | 2205000093 | |
| S55 i | 220/.073/.173 | E | 5439 | 113.986 | A | + | | 01/00 ▸ 09/04 | 2205000093 | |
| S55 i | 220/.073/.173 | E | 5439 | 113.986 | A | + | | 01/00 ▸ 09/04 | 2205000193 | |
| S320CDI CDI,S320CDIL CDI | 220/.025/.125 | D | 3222 | 648.960 | A | + | | 09/02 ▸ 09/04 | 2205000093 | |
| S320CDI CDI,S320CDIL CDI | 220/.025/.125 | D | 3222 | 648.960 | A | + | | 09/02 ▸ 09/04 | 2205000193 | |
| **SLK (96>2003))** | | | | | | | | | | |
| SLK200K i | 170.444 | E | 1998 | 111.958 | M | | | 04/00 ▸ 12/03 | 0005401588 | |
| SLK200K i | 170.444 | E | 1998 | 111.958 | A | | | 04/00 ▸ 12/03 | 0005401588 | |
| **V CLASS (638/2)** | | | | | | | | | | |
| V200 CDI,V220 CDI | 638.294 | D | 2151 | 611.980 | M | | | 01/99 ▸ 12/02 | 6385000593 | |
| V200 CDI,V220 CDI | 638.294 | D | 2151 | 611.980 | A | | | 01/99 ▸ 12/02 | 6385000593 | |
| V230TD TD | 638.274 | D | 2299 | 601.970 | M | | | 10/96 ▸ 12/02 | 6385000593 | |
| V230TD TD | 638.274 | D | 2299 | 601.970 | A | | | 10/96 ▸ 12/02 | 6385000593 | |
| **VANEO (414)** | | | | | | | | | | |
| 1.6 i | 414.700 | E | 1598 | 166.960,166.961 | M | + | | 10/01 ▸ 07/05 | 1685000593 | **696130** |
| 1.6 i | 414.700 | E | 1598 | 166.960,166.961 | M | + | | 10/01 ▸ 07/05 | 1685000293 | **696129** |
| 1.6 i | 414.700 | E | 1598 | 166.961 | A | + | | 10/01 ▸ 07/05 | 1685000593 | **696130** |
| 1.6 i | 414.700 | E | 1598 | 166.961 | A | - | | 10/01 ▸ 07/05 | 1685000293 | **696129** |
| 1.7 CDI | 414.700 | D | 1689 | 668.914 | M | + | | 10/01 ▸ 07/05 | 1685000293 | **696129** |
| 1.7 CDI | 414.700 | D | 1689 | 668.914 | A | + | | 10/01 ▸ 07/05 | 1685000293 | **696129** |
| **MERCEDES** | | | | | | | | | | |
| **VITO (96>2003)** | | | | | | | | | | |
| 2.2 CDI | 638/.094/.194 | D | 2151 | 611.980 | M | | | 03/99 ▸ 09/03 | 6385000593 | |
| 2.2 CDI | 638/.094/.194 | D | 2151 | 611.980 | A | | | 03/99 ▸ 09/03 | 6385000593 | |
| **MINI** | | | | | | | | | | |
| **MINI (2001>)** | | | | | | | | | | |
| 1.6 i 16V | RA31, RE31, RH31 RA30, RF31, RC31, RD31 | E | 1598 | W10B16A-115,W10B16A-90 W11B16A-163,W11B16A-170 | M | +/- | | 09/01 ▸ 11/06 | 17107529272 | |

| Type Ctr. | | CC | | | AC | | | OE | Valeo | |
|---|---|---|---|---|---|---|---|---|---|---|
| **MINI (.../...)** | | | | | | | | | | |
| **MINI (2001>) (.../...)** | | | | | | | | | | |
| 1.6 i 16V | RA31, RA30, RC31 | E | 1598 | W10B16A-115,W10B16A-90 | M | + | | 09/01 ▸ 11/06 | 17101475577 | |
| 1.6 i 16V | RA31, RC31, RA30 | E | 1598 | W10B16A-115,W10B16A-90 | A | +/- | | 09/01 ▸ 11/06 | 17107529272 | |
| 1.6 i 16V | RC31, RA30, RA31 | E | 1598 | W10B16A-115,W10B16A-90 | A | + | | 09/01 ▸ 11/06 | 17101475577 | |
| **MINI (R56) (2006>)** | | | | | | | | | | |
| 1.4 i 16V | ME31, ME32 | E | 1397 | N12B14A | M | + | | 03/07 ▸ 03/10 | 17422754854 | •696379 |
| 1.4 i 16V | ME42, ME41 | E | 1397 | N12B14A | A | + | | 03/07 ▸ 03/10 | 17422754854 | •696379 |
| 1.6 i 16V | MF31, MF32 | E | 1598 | N12B16A | M | + | | 11/06 ▸ 08/10 | 17422754854 | •696379 |
| 1.6 i Turbo 16V | MF72, MF71 | E | 1598 | N14B16A | M | + | | 11/06 ▸ | 17422752632 | •696377 |
| 1.6 i 16V | MF42, MF41 | E | 1598 | N12B16A | A | + | | 11/06 ▸ 08/10 | 17422754854 | •696379 |
| 1.6 i Turbo 16V | MF82, MF81 | E | 1598 | N14B16A | A | + | | 11/06 ▸ | 17422752632 | •696377 |
| 1.6 D 16V | MG31, MG32 | D | 1560 | 9HZ | M | + | | 03/07 ▸ 08/10 | 17427535100 | •696378 |
| **MINI COUPÉ (2011>)** | | | | | | | | | | |
| 1.6 i 122 16V<br>1.6 i Turbo 184 16V | SX31, SX12, SX11<br>SX32 | E | 1598 | N16B16AM0,N18B16AM0 | M | +/- | | 09/11 ▸ | 17422754854 | •696379 |
| 1.6 i 122 16V<br>1.6 i Turbo 184 16V | SX22, SX21, SX42<br>SX41 | E | 1598 | N16B16AM0,N18B16AM0 | A | +/- | | 09/11 ▸ | 17422754854 | •696379 |
| **OPEL** | | | | | | | | | | |
| **AGILA (2000>2007)** | | | | | | | | | | |
| 1.0 i 12V | | E | 973 | Z10XE | M | | | 03/00 ▸ 07/03 | 09204168 | 698552 |
| 1.0 i Twinport 12V | HF68CG | E | 998 | Z10XEP | M | | | 08/03 ▸ 12/07 | 09204168 | 698552 |
| 1.2 i 16V | HL68EG | E | 1199 | Z12XE | M | | | 03/00 ▸ 08/04 | 09204168 | 698552 |
| 1.2 i Twinport 16V | | E | 1229 | Z12XEP | M | | | 09/04 ▸ 12/07 | 09204168 | 698552 |
| **ASTRA F (91>98)** | | | | | | | | | | |
| 1.4,1.4 i,1.4 i 16V<br>S2559352, S5060107 ▸ | TA1/308/319/368, TA4<br>306/308/319/368/408/419/435/468, TAC/408/419<br>468 | E | 1389 | 14NV,14SE,C14NZ,C14SE,X14XE | M | + | | 1995 ▸ 01/98 | 1845043 | |
| 1.4 i<br>S2559352, S4000001 ▸ | TA6/308/319/368 | E | 1389 | 14SE,C14SE | A | + | | 1995 ▸ 03/96 | 1845043 | |
| 1.4,1.4 i,1.4 i 16V<br>▸ S4000000, S5060106 | TA1/308/319/368, TA4<br>306/308/319/368/408/419/435/468, TAC/408/419<br>468 | E | 1389 | 14NV,14SE,C14NZ,C14SE,X14XE | M | + | | 09/91 ▸ 1995 | 1845039 | 696172 |
| 1.4 i<br>▸ S4000000, S5060106 | TA6/308/319/368 | E | 1389 | 14SE,C14SE | A | + | | 03/91 ▸ 1995 | 1845039 | 696172 |
| 1.6 i,1.6 i 16V<br>S5060107, S4000001 ▸ | TAM/301/306/308/319<br>368, TAN/408/419/468 | E | 1598 | 16LZ2,C16NZ,C16SE,X16SZR<br>X16XEL | M | + | | 1995 ▸ 01/98 | 1845043 | |
| 1.6 i,1.6 i 16V<br>S2559352, S5060107 ▸ | TAM/608/619/668, TAN<br>608/619/668 | E | 1598 | C16SE,X16XEL | A | + | | 1995 ▸ 01/98 | 1845043 | |
| 1.6 i,1.6 i 16V<br>▸ S2559351, S4000000 | TAM/608/619/668, TAN<br>608/619/668 | E | 1598 | C16SE,X16XEL | A | + | | 09/91 ▸ 1995 | 1845039 | 696172 |
| 1.6 i,1.6 i 16V<br>▸ S2559351, S5060106 | TAM/301/306/308/319<br>368, TAN/408/419/468 | E | 1598 | 16LZ2,C16NZ,C16SE,X16SZR<br>X16XEL | M | + | | 09/91 ▸ 1995 | 1845039 | 696172 |
| 1.8 i<br>S2559352, S5060107 ▸ | | E | 1796 | C18NZ | M | + | | 1995 ▸ 01/98 | 1845043 | |
| 1.8 i<br>S4000001, S5060107 ▸ | | E | 1796 | C18NZ | A | + | | 1995 ▸ 01/98 | 1845043 | |
| 1.8 i<br>▸ S4000000, S2559351 | | E | 1796 | C18NZ | M | + | | 09/91 ▸ 1995 | 1845039 | 696172 |
| 1.8 i<br>▸ S5060106 | | E | 1796 | C18NZ | A | + | | 09/91 ▸ 1995 | 1845039 | 696172 |
| 1.8 i 16V<br>S5060107, S4000001 ▸ | | E | 1799 | C18XE,C18XEL,X18XE | M | + | | 1995 ▸ 01/98 | 1845043 | |
| 1.8 i 16V<br>S4000001 ▸ | | E | 1799 | X18XE | A | + | | 1995 ▸ 01/98 | 1845043 | |
| 1.8 i 16V<br>▸ S2559351, S5060106 | | E | 1799 | C18XE,C18XEL,X18XE | M | + | | 07/93 ▸ 1995 | 1845039 | 696172 |
| 1.8 i 16V<br>▸ S5060106, S2559351 | | E | 1799 | X18XE | A | + | | 07/95 ▸ 1995 | 1845039 | 696172 |

Fan System Groupe moto-ventilateur Lüftersystem Gruppo Motoventilatore Fan-systeem Fan sistemi
Grupo motorventilador Модуль вентилятора ventilátor rendszer Modul sahary Modul ventilator Σύστημα ανεμιστήρα



• **New** Nouveau **Nuevo** Novo **Nuovo** Nieuw **Neu** Nowość **Yeni** Новый Νέο **Novy**

# OPEL (.../...)

| | | | CC | | AC | | | OE | Valeo |
|---|---|---|---|---|---|---|---|---|---|
| **ASTRA F (91>98) (.../...)** | | | | | | | | | |
| 2.0 i,2.0 i 16V S2559352, S4000001 ▸ | TAD/3G0, TAJ/3G0/3G1 3G6, TAW/300/401/406 | E | 1998 | C20NE,C20XE,X20XEV | M | + | | 1995 ▸ 01/98 | 1845043 | |
| 2.0 i 16V S2559352, S5060107 ▸ | TAW/600/601/606 | E | 1998 | X20XEV | A | + | | 1995 ▸ 01/98 | 1845043 | |
| 2.0 i 16V ▸ S4000000, S5060106 | TAW/600/601/606 | E | 1998 | X20XEV | A | + | | 01/95 ▸ 1995 | 1845039 | 696172 |
| 2.0 i,2.0 i 16V ▸ S5060106, S2559351 | TAD/3G0, TAJ/3G0/3G1 3G6, TAW/300/401/406 | E | 1998 | C20NE,C20XE,X20XEV | M | + | | 09/91 ▸ 1995 | 1845039 | 696172 |
| 1.7 TD Turbo S4000001, S2559352 ▸ | TA9/419/468/4E0/4E1 4E6 | D | 1686 | 17TD | M | + | | 1995 ▸ 01/98 | 1845043 | |
| 1.7 TD Turbo ▸ S2559351, S5060106 | TA9/419/468/4E0/4E1 4E6 | D | 1686 | 17TD | M | + | | 09/91 ▸ 1995 | 1845039 | 696172 |
| 1.7 D,1.7 TD 1.7 TD Ecoturbo S2559352, S5060107 ▸ | TAA/408/419/468, TAF 408/419/435/468 | D | 1699 | 17D,17DR,X17DTL | M | + | | 1995 ▸ 01/98 | 1845043 | |
| 1.7 D,1.7 TD 1.7 TD Ecoturbo | TAA/408/419/468, TAF 408/419/435/468 | D | 1699 | 17D,17DR,X17DTL | M | + | | 09/91 ▸ 1995 | 1845039 | 696172 |
| **ASTRA G (98>2005)** | | | | | | | | | |
| 2.0 i 16V,2.0 i Turbo 16V | | E | 1998 | X20XER,Z20LET | M | + | | 11/99 ▸ 02/04 | 1341347 | •696355 |
| 2.0 i 16V | | E | 1998 | X20XEV | M | + | | 02/98 ▸ 12/99 | 1341348 | •696370 |
| 2.0 i 16V | | E | 1998 | X20XEV | A | + | | 02/98 ▸ 12/99 | 1341348 | •696370 |
| 2.2 i 16V | 0BP07P, BF67P1 | E | 2198 | Z22SE | M | + | C | 10/99 ▸ 06/05 | 1341347 | •696355 |
| 2.2 i 16V | 0BP07P, BF67P1 | E | 2198 | Z22SE | A | + | | 10/99 ▸ 12/05 | 1341347 | •696355 |
| 1.7 CDTI,1.7 DTi 16V | TU3/5JA/5JF | D | 1686 | Y17DT,Z17DTL | M | + | | 02/00 ▸ 02/04 | 1341347 | •696355 |
| 1.7 CDTI,1.7 DTi 16V | TU3/5JA/5JF | D | 1686 | Y17DT,Z17DTL | M | - | | 02/00 ▸ 02/04 | 1341348 | •696370 |
| 1.7 TD,1.7 TD Ecoturbo | | D | 1699 | X17DTL | M | + | | 02/98 ▸ 08/00 | 1341347 | •696355 |
| 1.7 TD,1.7 TD Ecoturbo | | D | 1699 | X17DTL | M | +/- | | 02/98 ▸ 08/00 | 1341348 | •696370 |
| 2.0 DTi 16V,2.0 Di 16V | | D | 1995 | X20DTL,Y20DTH,Y20DTL | M | + | | 02/98 ▸ | 1341347 | •696355 |
| 2.0 DTi 16V,2.0 Di 16V | | D | 1995 | X20DTL,Y20DTH,Y20DTL | A | + | | 02/98 ▸ 02/04 | 1341347 | •696355 |
| 2.0 Di 16V | | D | 1995 | X20DTL | M | +/- | | 02/98 ▸ 02/04 | 1341348 | •696370 |
| 2.0 DTi 16V,2.0 Di 16V | | D | 1995 | X20DTL,Y20DTH,Y20DTL | A | +/- | | 02/98 ▸ 02/04 | 1341348 | •696370 |
| 2.2 DTI 16V | | D | 2171 | Y22DTR | M | + | | 03/01 ▸ 12/05 | 1341347 | •696355 |
| 2.2 DTI 16V | | D | 2171 | Y22DTR | M | - | | 03/01 ▸ 12/05 | 1341348 | •696370 |
| **CORSA C (2000>2003)** | | | | | | | | | |
| 1.4 i 16V | 0AE/08G/68G, 0AS/08G 68G | E | 1389 | Z14XE | M | - | | 09/00 ▸ 08/03 | 1314443 | •696382 |
| 1.4 i 16V | 0AE/08G/68G | E | 1389 | Z14XE | A | + | | 09/00 ▸ 08/03 | 1314446 | •696381 |
| 1.8 i 16V | 0AG08K, 0AE/08K, 0AS 08K/68K | E | 1796 | Z18XE | M | + | | 09/00 ▸ 08/03 | 1314443 | •696382 |
| 1.8 i 16V | 0AG08K, 0AE/08K, 0AS 08K/68K | E | 1796 | Z18XE | M | + | | 09/00 ▸ 08/03 | 1314446 | •696381 |
| **FRONTERA (91>98)** | | | | | | | | | |
| 2.0 i | 52SUD2, 55SUD2 | E | 1998 | C20NE,X20SE | M | + | | 03/91 ▸ 09/98 | 1845039 | 696172 |
| 2.2 i 16V | 54MWL4 | E | 2198 | X22XE | M | + | | 04/95 ▸ 09/98 | 1845039 | 696172 |
| 2.4 i | 53MWL4 | E | 2410 | C24NE | M | + | | 03/91 ▸ 04/95 | 1845039 | 696172 |
| 2.3 TD | 5JM/UL4/WL4 | D | 2260 | 23DTR | M | + | | 03/91 ▸ 04/95 | 1845039 | 696172 |
| 2.5 TDS | 5KMWL4, 5KSUD2 | D | 2499 | 25TDS | M | + | | 06/96 ▸ 09/98 | 1845039 | 696172 |
| 2.8 TDi | 5BMWL4, 5BSUD2 | D | 2771 | 4JB1-TC | M | + | | 05/95 ▸ 07/96 | 1845039 | 696172 |
| **MERIVA** | | | | | | | | | |
| 1.7 CDTi 16V | | D | 1686 | Z17DTH | M | | | 08/03 ▸ 10/09 | | •696364 |
| 1.4 i Twinport 16V | | E | 1364 | Z14XEP | M | + | | 09/04 ▸ 05/10 | 6341156 | •696373 |
| 1.4 i Twinport 16V | | E | 1364 | Z14XEP | M | - | | 09/04 ▸ 05/10 | 6341158 | •696374 |
| 1.6 i,1.6 i 16V | | E | 1598 | Z16SE/E4,Z16XE,Z16XEP | M | + | | 05/03 ▸ 07/10 | 6341156 | •696373 |
| 1.6 i,1.6 i 16V | | E | 1598 | Z16SE/E4,Z16XE,Z16XEP | M | - | | 05/03 ▸ 07/10 | 6341158 | •696374 |
| 1.8 i 16V | | E | 1796 | Z18XE | M | + | | 05/03 ▸ 04/09 | 6341156 | •696373 |
| 1.8 i 16V | | E | 1796 | Z18XE | M | - | | 05/03 ▸ 04/09 | 6341158 | •696374 |
| 1.7 DTi 16V | | D | 1686 | Y17DT | M | + | | 05/03 ▸ 04/05 | 1314966 | •696385 |
| 1.7 CDTi 16V | | D | 1686 | Z17DTH | M | - | | 08/03 ▸ 10/09 | 1314557 | •696386 |
| 1.7 DTi 16V | | D | 1686 | Y17DT | M | - | | 04/05 ▸ | 6341162 | •696384 |
| **VECTRA A (88>95)** | | | | | | | | | |
| 1.7 TD | JV9/401/406/419/468 | D | 1686 | 17TD | M | | C | 07/91 ▸ 09/95 | 1845039 | 696172 |

# OPEL (.../...)

## ZAFIRA (98>2003)

| Type Ctr. | | CC | | AC | | | OE | Valeo |
|---|---|---|---|---|---|---|---|---|
| 2.2 i 16V WOL0TG | E | 2198 | Z22SE | M | + | | 01/99 ▸ 06/03 | 1341347 | •696355 |
| 2.2 i 16V WOL0TG | E | 2198 | Z22SE | A | + | | 01/99 ▸ 06/03 | 1341347 | •696355 |
| 2.0 DT 16V,2.0 DTi 16V WOL0TG | D | 1995 | X20DTL,Y20DTH | M | + | | 01/99 ▸ 06/03 | 1341347 | •696355 |
| 2.0 DT 16V,2.0 DTI 16V WOL0TG | D | 1995 | X20DTL,Y20DTL | A | + | | 01/99 ▸ 06/03 | 1341347 | •696355 |

## ZAFIRA (2003>2005)

| | | | | | | | | | |
|---|---|---|---|---|---|---|---|---|---|
| 2.0 DTI 16V QG75MR, QM75MR QX75MR, QD7/5MR | D | 1995 | Y20DTH | M | + | | 07/03 ▸ 06/05 | 1341347 | •696355 |
| 2.0 DTI 16V QM75MI, QX75MI, QG7 5MI | D | 1995 | Y20DTH | A | + | | 07/03 ▸ 06/05 | 1341347 | •696355 |
| 2.0 DTI 16V QG75MR, QM75MR QX75MR, QD7/5MR | D | 1995 | Y20DTH | M | - | | 07/03 ▸ 06/05 | 1341348 | •696370 |
| 2.0 DTI 16V QM75MI, QX75MI, QG7 5MI | D | 1995 | Y20DTH | A | - | | 07/03 ▸ 06/05 | 1341348 | •696370 |
| 2.2 DTI 16V QD7/5PR/5PW, QX7/5PR 5PW | D | 2171 | Y22DTR | M | + | | 07/03 ▸ 06/05 | 1341347 | •696355 |
| 2.2 DTI 16V QD7/5PR/5PW, QX7/5PR 5PW | D | 2171 | Y22DTR | M | - | | 07/03 ▸ 06/05 | 1341348 | •696370 |

# PEUGEOT

## 106 (96>2003)

| | | | | | | | | | |
|---|---|---|---|---|---|---|---|---|---|
| 1.6 i 16V 1CNFXE | E | 1587 | TU5J4 | M | + | | 01/99 ▸ 07/03 | | |
| 1.6 i,1.6 i 16V 1AN/FZE/FZT, 1CN/FWE FX2/FXE/FZE/FZT ▸ 7784 | E | 1587 | TU5J2,TU5J4,TU5JP | M | | | 03/96 ▸ 03/98 | | |
| 1.6 i 1ANFZL, 1CNFZL | E | 1587 | TU5JP | A | | | 03/96 ▸ 03/98 | | |

## 207

| | | | | | | | | | |
|---|---|---|---|---|---|---|---|---|---|
| 1.4 e,1.4 e 16V WAK/FUC/FVC, WEKFVC WCK/FUC/FVC | E | 1360 | ET3J4,TU3A | M | - | | 03/06 ▸ | 1253H6 | 696238 |
| 1.4 VTi 16V WC8FSC, WE8FSC, WA8 FSC | E | 1397 | EP3 | M | - | | 07/07 ▸ | 1253H6 | 696238 |
| 1.6 e 16V WANFUC, WCNFUC | E | 1587 | TU5JP4 | M | - | Left/gauche | 03/06 ▸ 07/07 | 1253H6 | 696238 |
| 1.6 e 16V WAN/FUC/FUF | E | 1587 | TU5JP4 | A | - | | 03/06 ▸ 07/07 | 1253H6 | 696238 |
| 1.6 VTi 16V,1.6 e 16V WB5FWC, WC5FWC WE5FWC, WA5/FWC | E | 1598 | EP6 | M | - | | 01/07 ▸ | 1253H6 | 696238 |
| 1.6 VTi 16V,1.6 e 16V WB5FWF, WC5FWF WE5FWF, WA5/FWF | E | 1598 | EP6 | A | - | | 01/07 ▸ | 1253H6 | 696238 |
| 1.4 HDi WA8HZC, WC8HZC | D | 1398 | DV4TD | M | - | | 03/06 ▸ | 1253H6 | 696238 |
| 1.6 HDi 16V WB9HZC, WA9/HXC/HYC HZC, WC9/HXC/HYC/HZC, WE9/HXC/HYC/HZC | D | 1560 | DV6ATED4,DV6TED4 | M | - | Left/gauche | 03/06 ▸ | 1253H6 | 696238 |

## 306 (93>97)

| | | | | | | | | | |
|---|---|---|---|---|---|---|---|---|---|
| 1.1 i 7AH/DY2/DZ2 ; 7CH/DY2/DZ2 ; 7SH/DY2/DZ2 | E | 1124 | TU1M,TU1M+ | M | + | | 02/93 ▸ 02/97 | | 696212 |
| 1.4,1.4 i 7AK/2D2/DX2 DX9 ; 7BK/2D2/2D9/DX2/DX9 ; 7CK/2D2/DX2 DX9 ; 7SK/2D2/DX2 | E | 1360 | TU3.2,TU3MC | M | + | | 02/93 ▸ 02/97 | | 696212 |
| 1.4,1.4 i 7AK/2D2/3A2/DX2 DX9 ; 7BK/2D2/2D9/3A2/DX2/DX9/FX2 ; 7CK/2D2 DX2/DX9 ; 7SK/2D2/DX2 | E | 1360 | TU3,TU3.2,TU3JP,TU3MC | M | + | | 02/93 ▸ 02/97 | | 696212 |
| 1.4 i 7AK/DX2/DX9 ; 7BK/DX2/DX9 ; 7SKDX2 ; 7CK/DX2 DX9 | E | 1360 | TU3MC | M | + | | 02/93 ▸ 02/97 | | 696213 |
| 1.6 i 7AN/FZ2/FZ9 ; 7BN/FZ2/FZ9 ; 7DNFZ2 ; 7CN/FZ2 FZ9 | E | 1587 | TU5JP | M | + | | 02/93 ▸ 02/97 | | 696212 |
| 1.6 i 7AN/FZ2/FZ9 ; 7BN/FZ2/FZ9 ; 7DNFZ2 ; 7CN/FZ2 FZ9 | E | 1587 | TU5JP | M | + | | 02/93 ▸ 02/97 | | 696212 |
| 1.6 i 7AN/FZ2/FZ9 ; 7BN/FZ2/FZ9 ; 7DNFZ2 ; 7CN/FZ2 FZ9 | E | 1587 | TU5JP | M | + | | 02/93 ▸ 02/97 | | 696213 |
| 1.8 i 7AL/6A2/6A9/FZ2/FZ8/FZ9 ; 7BL/6A2/6A9/FZ2 FZ8/FZ9 ; 7CL/FZ2/FZ8/FZ9 ; 7DL/6A2/FZ2/FZ8 | E | 1761 | XU7JP | M | + | | 02/93 ▸ 02/97 | | 696213 |
| 1.8 i 7AL/6A2/6A9/FZ2/FZ8/FZ9 ; 7BL/6A2/6A9/FZ2 FZ8/FZ9 ; 7CL/FZ2/FZ8/FZ9 ; 7DL/6A2/FZ2/FZ8 | E | 1761 | XU7JP | M | + | | 02/93 ▸ 02/97 | | 696212 |
| 1.8 i 7AL/6A4/FZ4 ; 7CLFZ4 ; 7BL/6A4/FZ4 ; 7DL/6A4 FZ4 | E | 1761 | XU7JP | A | + | | 06/93 ▸ 02/97 | | 696213 |
| 1.8 i 7AL/6A4/FZ4 ; 7CLFZ4 ; 7BL/6A4/FZ4 ; 7DL/6A4 FZ4 | E | 1761 | XU7JP | A | + | | 06/93 ▸ 02/97 | | 696212 |

Fan System Groupe moto-ventilateur Lüftersystem Gruppo Motoventilatore Fan-systeem Fan sistemi
Grupo motorventilador Модуль вентилятора ventilátor rendszer Modul sahary Modul ventilator Σύστημα ανεμιστήρα



• **New** Nouveau **Nuevo** Novo **Nuovo** Nieuw **Neu** Nowość **Yeni** Новый Νέο **Novy**

| | | CC | | AC | | | OE | Valeo | |
|---|---|---|---|---|---|---|---|---|---|
| **PEUGEOT (.../...)** | | | | | | | | | |
| **306 (93>97) (.../...)** | | | | | | | | | |
| 2.0 i,2.0 i 16V 7AR/6D2/FT2/FV2/FX2 FX8/FY2 ; 7BR/FX2/FX8 ; 7CR/6D2/FS2/FT2/FV2 FX2/FX8/FY2 ; 7DR/6D2/FX2 | E | 1998 | XU10J2,XU10J2C,XU10J4,XU10J4R XU10J4RS | M | + | | 06/93 ▸ 02/97 | | 696213 |
| 2.0 i,2.0 i 16V 7AR/6D2/FT2/FV2/FX2 FX8/FY2 ; 7BR/FX2/FX8 ; 7CR/6D2/FS2/FT2/FV2 FX2/FX8/FY2 ; 7DR/6D2/FX2 | E | 1998 | XU10J2,XU10J2C,XU10J4,XU10J4R XU10J4RS | M | + | | 06/93 ▸ 02/97 | | 696212 |
| 2.0 i 16V 7CRFS2 | E | 1998 | XU10J4RS | M | - | | 03/96 ▸ 02/97 | | 696212 |
| 2.0 i 7BRFX4 ; 7CRFX4 ; 7DRFX4 ; 7AR/FX4 | E | 1998 | XU10J2,XU10J2C | A | + | | 09/93 ▸ 02/97 | | 696212 |
| 1.8 D 7CA9A2 ; 7SA9A2 ; 7AA/9A2 | D | 1769 | XUD7 | M | + | | 06/93 ▸ 02/97 | | 696213 |
| 1.8 D 7CA9A2 ; 7SA9A2 ; 7AA/9A2 | D | 1769 | XUD7 | M | + | | 06/93 ▸ 02/97 | | 696212 |
| 1.8 D 7CA9A2 ; 7SA9A2 ; 7AA/9A2 | D | 1769 | XUD7 | M | + | | 06/93 ▸ 02/97 | | 696212 |
| 1.9 D 7AD/9B2/JY2/JZ2 ; 7CD/9B2/JY2/JZ2 ; 7SD/9B2 JZ2 | D | 1905 | XUD9,XUD9A | M | + | | 06/93 ▸ 02/97 | | 696212 |
| 1.9 D 7AD/9B2/JY2/JZ2 ; 7BD/9B2/JY2 ; 7CD/9B2/JY2 JZ2 ; 7SD/9B2/JY2/JZ2 | D | 1905 | XUD9,XUD9A | M | + | | 06/93 ▸ 02/97 | | 696213 |
| 1.9 D 7AD/9B2/JY2/JZ2 ; 7BD/9B2/JY2 ; 7CD/9B2/JY2 JZ2 ; 7SD/9B2/JY2/JZ2 | D | 1905 | XUD9,XUD9A | M | + | | 06/93 ▸ 02/97 | | 696212 |
| 1.9 D 7SDJY2 ; 7BD/9B2/JY2 | D | 1905 | XUD9,XUD9A | M | - | | 10/95 ▸ 02/97 | | 696212 |
| **306 (97>2002)** | | | | | | | | | |
| 1.6 i 7BNFTF ; 7DNFTF ; 7ENFTF ; 7AN/FTF | E | 1587 | TU5JP | M | + | | 09/00 ▸ 09/02 | | 696213 |
| 1.6 i 7BNFTR ; 7DNFTR ; 7ENFTR ; 7AN/FTR | E | 1587 | TU5JP | A | +/- | | 01/00 ▸ 09/02 | | 696213 |
| 1.8 i,1.8 i 16V 7AL/6A2/FYE/FYF/FYT 1.8 i GPL 16V FYW ; 7BL/6A2/FYE FYF/FYT/FYW/FZW ; 7CL/6A2/FYE/FYF ; 7DL/6A2 FYE/FYT ; 7EL/6A2/FYE/FYF/FYT/FYW ▸ 7811 | E | 1761 | XU7JP,XU7JP4 | M | + | | 03/97 ▸ 03/02 | | 696213 |
| 1.8 i 7AL/6A4/FZP ; 7CLFZP ; 7DLFZP ; 7BL/6A4/FZ4 FZP ; 7EL/6A4/FZP ▸ 7811 | E | 1761 | XU7JP | A | + | | 03/97 ▸ 03/98 | | 696213 |
| 2.0 i 16V 7CRFSH | E | 1998 | XU10J4RS | M | +/- | | 03/97 ▸ 02/02 | | 696213 |
| 2.0 i 16V 7AR FVP ; 7CRFVP ; 7BR/FVP/FVW ; 7DR/FVP FVW ; 7ER/FVP/FVW | E | 1998 | XU10J4R | A | + | | 03/97 ▸ 09/02 | | 696213 |
| 2.0 i 16V 7BRFVE ; 7AR FVE ; 7CR/6E2/FVE ; 7ERFVE ; 7DR/6E2/FVE | E | 1998 | XU10J4R | M | + | | 03/97 ▸ 03/98 | | 696213 |
| **1007** | | | | | | | | | |
| 1.4 i,1.4 i 16V KMK/FUC/FVB | E | 1360 | ET3J4,TU3A,TU3JP | M | + | C | 04/05 ▸ | 1253H6 | 696238 |
| 1.6 i 16V KMNFUC | E | 1587 | TU5JP4 | M | + | C | 04/05 ▸ | 1253H6 | 696238 |
| 1.4 HDi KM8/HXB/HZB | D | 1398 | DV4TD | M | + | C | 04/05 ▸ | 1253H6 | 696238 |
| 1.6 HDi 16V KM9HZC | D | 1560 | DV6TED4 | M | + | C | 02/07 ▸ | 1253H6 | 696238 |
| **PEUGEOT** | | | | | | | | | |
| **BOXER (94>2001)** | | | | | | | | | |
| 2.0,2.0 i 231/A22/A24/A34/B12 B22/B24/C22/C24/G22/H22/V22/V24, 232/B22/B24 G22/H22/J12/J22/K22/L22/V22/V24, 233/B22/G22 H22/J22/K22/L22 | E | 1998 | XU102CU,XU10J2U | M | +/- | | 02/94 ▸ 12/01 | | 696101 |
| 1.9 D,1.9 TD 231/A32/A62/A72/A82 B72/B82/C32/C62/C72/C82/V82, 232/B72/B82 | D | 1905 | XUD9A,XUD9AU,XUD9TEF,XUD9UTF | M | - | | 02/94 ▸ 12/01 | | 696101 |
| 2.5 D,2.5 TD 231/A52/B02/B52/B54 B59/B92/B94/C02/G52/H52/J52/V52/V94, 232/B02 B52/B54/B92/B94/G52/H52/H92/J02/J52/J54/J92 J94/K52/K54/L52/L54/L92/V52/V94, 233/B52/G52 H52/J52/J54/J92/K52/K54/L52/L54, 234/G52/K52 | D | 2446 | DJ5,DJ5T | M | +/- | | 02/94 ▸ 12/01 | | 696101 |
| 2.5 TDi 231/B42/B44/C42/C44 J42/V42, 232/B42/B44/H44/J42/J44/V44, 233 B42/J42/J44 | D | 2446 | DJ5TED | M | - | | 12/96 ▸ 12/01 | | 696101 |
| 2.8 D,2.8 TD 232 | D | 2798 | 8140-43,8140-63 | M | - | | 06/99 ▸ 12/01 | | 696101 |
| **BOXER (2002>2006)** | | | | | | | | | |
| 2.0 i ZAT/MF, ZBT/MF/MP, ZCT/MF/MM | E | 1998 | XU10J2U | M | - | | 01/02 ▸ 06/06 | | 696101 |
| **PARTNER (96>2002)** | | | | | | | | | |
| 1.9 D 5BW/JYF/JZE/JZT ; 5CW/JYF/JZE ; 5FW/JYF/JZE | D | 1868 | DW8,DW8B | M | + | | 10/98 ▸ 11/02 | | 696214 |
| 1.9 D 5BW/JYF/JZE/JZT, 5CW/JYF/JZE, 5FW/JYF/JZE | D | 1868 | DW8,DW8B | M | + | | 10/98 ▸ 11/02 | | |

| Type Ctr. | | CC | | | AC | | | OE | Valeo | |
|---|---|---|---|---|---|---|---|---|---|---|
| **PEUGEOT (.../...)** | | | | | | | | | | |
| **PARTNER (96>2002) (.../...)** | | | | | | | | | | |
| 2.0 HDi 5BR/HYE/HYF ; 5CR HYE/HYF ; 5FR/HYE/HYF/HYU | D | 1997 | DW10TD | M | + | | 05/00 ▸ 11/02 | | 696214 | |
| 2.0 HDi 5BR/HYE/HYF, 5CR/HYE HYF, 5FR/HYE/HYF/HYU | D | 1997 | DW10TD | M | + | | 05/00 ▸ 11/02 | | | |
| **RENAULT** | | | | | | | | | | |
| **CLIO II (98>2001)** | | | | | | | | | | |
| 1.2 i,1.2 i GPL BB0/A/B F ; SB0A ; CB0/A/B/F | E | 1149 | D7F | M | - | | 03/98 ▸ 03/01 | | 696216 | |
| 1.4 i BB0/C/S ; CB0/C/S | E | 1390 | E7J | M | + | | 03/98 ▸ 03/01 | | 696216 | |
| 1.4 i 16V BB0L ; CB0L | E | 1390 | K4J | M | - | | 09/99 ▸ 03/01 | | 696216 | |
| 1.4 i LB03 | E | 1390 | K7J | M | - | | 12/99 ▸ 03/01 | | 696216 | |
| 1.4 i BB0S ; CB0S | E | 1390 | E7J | A | - | | 10/98 ▸ 03/01 | | 696216 | |
| 1.4 i 16V BB0L ; CB0L | E | 1390 | K4J | A | - | | 02/99 ▸ 03/01 | | 696216 | |
| 1.6 i,1.6 i 16V BB0/D ; CB0/D/H/T | E | 1598 | K4M,K7M | M | - | | 03/98 ▸ 03/01 | | 696216 | |
| 1.6 i BB0D ; CB0D | E | 1598 | K7M | A | - | | 03/98 ▸ 03/01 | | 696216 | |
| 1.9 dTi BB0U ; CB0U | D | 1870 | F9Q | M | - | | 11/99 ▸ 03/01 | | 696216 | |
| 1.9 D BB0/2/E/J ; LB02 ; CB0/E/J ; SB0/E/J/R | D | 1870 | F8Q | M | - | | 03/98 ▸ 03/01 | | 696215 | |
| **CLIO II (2001>)** | | | | | | | | | | |
| 1.2 i,1.2 i GPL BB0/A/F ; BB2D ; BB1 0/K ; CB0/A/F ; CB2D ; CB1/0/K ; SB10 ; SB0 A/F | E | 1149 | D7F | M | + | | 04/01 ▸ 12/05 | | 696216 | |
| 1.2 i 16V BB11 ; BB0/5 W ; CB11 ; CB0/5/W | E | 1149 | D4F | M | - | | 04/01 ▸ | | 696216 | |
| 1.4 i BB0S ; CB0S | E | 1390 | E7J | M | + | | 04/01 ▸ 05/05 | | 696216 | |
| 1.4 i 16V BB0/L/P ; BB1/3 L ; CB0/L/P ; CB1/3/L | E | 1390 | K4J | M | - | | 04/01 ▸ 12/04 | | 696216 | |
| 1.4 i BB17 ; BB0/B/C ; CB17 ; CB0/B/C | E | 1390 | E7J,K7J | M | - | | 04/01 ▸ | | 696216 | |
| 1.4 i BB0S ; CB0S | E | 1390 | E7J | A | + | | 04/01 ▸ 05/05 | | 696216 | |
| 1.4 i 16V BB0/L/P ; BB1/3 L ; CB0/L/P ; CB1/3/L | E | 1390 | K4J | A | - | | 04/01 ▸ | | 696216 | |
| 1.6 i,1.6 i 16V BB0/1/D/H T ; BB2K ; BB1/4/D/J/R ; CB0/D/H/T ; CB1/4/D | E | 1598 | K4M,K7M | M | - | | 04/01 ▸ 12/04 | | 696216 | |
| 1.6 i,1.6 i 16V BB0 D ; BB2K ; CB0D ; BB1/4/D/R ; CB1/4/D | E | 1598 | K4M,K7M | A | - | | 04/01 ▸ 12/04 | | 696216 | |
| 1.5 dCi CB07 ; SB07 ; BB0/7 | D | 1461 | K9K | M | - | | 04/01 ▸ 04/05 | | 696216 | |
| 1.9 dTi BB2C ; BB0/U V ; CB2C ; SB0U ; CB0/U/V | D | 1870 | F9Q | M | - | | 04/01 ▸ | | 696216 | |
| **RENAULT** | | | | | | | | | | |
| **KANGOO EXTRA (98>2003)** | | | | | | | | | | |
| 1.2 i FC0A | E | 1149 | D7F | M | - | | 01/98 ▸ 02/03 | | 696216 | |
| 1.4 i FC0C | E | 1390 | E7J | M | - | | 01/98 ▸ 02/03 | | 696216 | |
| **KANGOO (97>2003)** | | | | | | | | | | |
| 1.2 i FC0A ; KC0A | E | 1149 | D7F | M | - | | 09/97 ▸ 02/03 | | 696216 | |
| 1.4 i FC0/C/H ; KC0/C/H | E | 1390 | E7J | M | - | | 09/97 ▸ 02/03 | | 696216 | |
| 1.4 i KC0H | E | 1390 | E7J | A | - | | 10/99 ▸ 02/03 | | 696216 | |
| 1.6 i FC00 ; KC00 | E | 1598 | K7M | M | - | | 12/99 ▸ 02/03 | | 696215 | |
| 1.9 D FC0D ; KC0D | D | 1870 | F8Q | M | | | 09/97 ▸ 02/03 | | 696217 | |
| **KANGOO (2003>2009)** | | | | | | | | | | |
| 1.2 i GPL FC0A ; KC0A | G | 1149 | D7F | M | - | | 03/03 ▸ 09/07 | | 696216 | |
| 1.2 i,1.2 i 16V FC1D ; FC0/1/5/A/F/T W ; KC0/1/5/A/F/K/T/W | E | 1149 | D4F,D7F | M | - | | 03/03 ▸ 12/07 | | 696216 | |
| **MASTER (2003>2006)** | | | | | | | | | | |
| 3.0 dCi FD0S, HD0S, JD0T UD0S, ED0/S | D | 2953 | ZD3 | M | - | | 10/03 ▸ 05/06 | 7701208196 | •696081 | |
| **SAAB** | | | | | | | | | | |
| **9-3 (2002>)** | | | | | | | | | | |
| 1.8 t Turbo 16V,2.0 t Turbo 16V | F | 1998 | B207L,B207R | M | + | | 07/07 ▸ | 24410993 | •696387 | |

Fan System Groupe moto-ventilateur Lüftersystem Gruppo Motoventilatore Fan-systeem Fan sistemi
Grupo motorventilador Модуль вентилятора ventilátor rendszer Modul sahary Modul ventilator Σύστημα ανεμιστήρα



• **New** Nouveau **Nuevo** Novo **Nuovo** Nieuw **Neu** Nowość **Yeni** Новый Νέο **Novy**

| | | CC | | AC | | | OE | Valeo | |
|---|---|---|---|---|---|---|---|---|---|
| **SAAB** (.../...) | | | | | | | | | |
| **9-3 (2002>) (.../...)** | | | | | | | | | |
| 1.8 t Turbo 16V,2.0 t Turbo 16V | F | 1998 | B207L,B207R | A | + | | 07/07 ▸ | 24410993 | •696387 |
| 2.2 TiD 16V FB45D, FD45D | D | 2171 | D223L-125 | M | + | | 09/02 ▸ 07/04 | 24410993 | •696387 |
| **SEAT** | | | | | | | | | |
| **CORDOBA (96>99)** | | | | | | | | | |
| 1.9 D,1.9 TD 6K2/2Y2/3E1/3Y2/5E1 | D | 1896 | 1Y,AAZ | M | - | | 07/96 ▸ 04/99 | 6K0121191A | 698321 |
| **CORDOBA (99>2002)** | | | | | | | | | |
| 1.0 i 6K2/2A6/2B6/2V6/3A6/3B6/3V6 | E | 999 | ALD,ANV,AUC | M | + | | 08/99 ▸ 08/02 | 6K0121191K | |
| 1.0 i 16V 6K2/2Q6/2Y6/3Y6 | E | 999 | AST,AVZ | M | + | | 05/00 ▸ 08/02 | 6K0121191L | |
| 1.4 i,1.4 i 16V 6K2/2C6/2D6/2E6/2R6 2U6/3C6/3D6/3E6/3R6/3U6/5R6/8E6, 6K5/2D6/2E6 2R6/3E6/3R6 | E | 1390 | AKK,ANW,APE,AQQ,AUB,AUD | M | + | | 05/99 ▸ 08/02 | 6K0121191L | |
| 1.4 i 6K2/2C6/3C6 | E | 1390 | AKK | M | + | | 08/99 ▸ 08/02 | 6K0121191K | |
| 1.4 i 16V 6K2/2E6/2R6/3E6/3R6 8E6 | E | 1390 | APE,AQQ | M | - | | 05/99 ▸ 08/02 | 6K0121191K | |
| 1.6 i 6K2/2H6/2S6/2T6/3H6/3T6/5H6/5T6/8H6/8T6, 6K5 2H6/2S6/2T6/3H6/3T6/5H6/5T6 | E | 1595 | AKL,APF,AUR | M | + | | 05/99 ▸ 08/02 | 6K0121191L | |
| 1.6 i 6K2/2H6/2S6/2T6/3H6/3T6/5H6/8H6/8T6, 6K5/2S6 2T6/3T6/5T6 | E | 1595 | AKL,APF | M | - | | 05/99 ▸ 08/02 | 6K0121191K | |
| 1.6 i 6K25T6 | E | 1595 | AKL | M | | | 06/99 ▸ 08/02 | 6K0121191K | |
| 1.6 i 6K52S7, 6K2/2G8/2S7/3G8 | E | 1595 | AEH,AKL | A | + | | 01/00 ▸ 08/02 | 6K0121191L | |
| 1.6 i 6K2/2G8/2S7/3G8, 6K5/2G8/2S7/3G8 | E | 1595 | AEH,AKL | A | - | | 05/99 ▸ 08/02 | 6K0121191K | |
| 1.6 i 6K2/2F1/3F1/8F1, 6K5/2F1/3F1 | E | 1598 | ALM | M | + | | 05/99 ▸ 08/02 | 6K0121191L | |
| 1.8 i Turbo 20V 6K2/6J6/9J6 | E | 1781 | AQX | M | + | | 12/99 ▸ 08/02 | 6K0121191K | |
| 1.9 TDi 6K2/2N6/3N6/3X6/5N6 5X6/8N6/9X6, 6K5/2L6/2N6/3L6/3N6/5L6/5N6 | D | 1896 | AGR,ALH,ASV | M | +/- | | 05/99 ▸ 08/02 | 6K0121191K | |
| 1.9 TDi 6K2/3X6/5X6/9X6, 6K5 3X6/5X6 | D | 1896 | ASV | M | + | | 03/99 ▸ 08/02 | 6K0121191M | |
| 1.9 SDi,1.9 TDi 6K2/2K6/2L6/2M6/2N6 3K6/3L6/3M6/3N6/3X6/5L6/5N6/5X6/8L6/8N6/9X6 6K5/2K6/2L6/2N6/3K6/3L6/3N6/5L6/5N6 | D | 1896 | AGP,AGR,ALH,AQM,ASV | M | + | | 05/99 ▸ 08/02 | 6K0121191L | |
| 1.9 SDi,1.9 TDi 6K2/2K6/2L6/2M6/3K6 3L6/3M6/5L6/8L6, 6K5/2K6/2M6/3K6/3M6 | D | 1896 | AGP,AGR,AQM | M | - | | 05/99 ▸ 08/02 | 6K0121191K | |
| 1.9 TDi 6K2/2L6/3L6/5L6, 6K5 3X6/5X6 | D | 1896 | AGR,ASV | M | | | 05/99 ▸ 08/02 | 6K0121191K | |
| **CORDOBA (2002>)** | | | | | | | | | |
| 1.4 TDi 6L2/204/264/304/364 504/564 | D | 1422 | AMF,BNV | M | - | | 10/02 ▸ 11/09 | 6Q0959455D | •696375 |
| **IBIZA (93>99)** | | | | | | | | | |
| 1.9 D 6K1/1Y2/2Y2/3Y2 | D | 1896 | 1Y | M | | | 07/96 ▸ 06/99 | 6K0121191A | 698321 |
| **IBIZA (99>2001)** | | | | | | | | | |
| 1.0 i 6K1/1A6/1B6/1V6/2A6/2B6/2V6/3A6/3B6/3V6 | E | 999 | ALD,ANV,AUC | M | + | | 08/99 ▸ 11/01 | 6K0121191K | |
| 1.0 i 16V 6K1/2Q6/2Y6/3Y6 | E | 999 | AST,AVZ | M | + | | 05/00 ▸ 11/01 | 6K0121191L | |
| 1.4 i,1.4 i 16V 6K1/1C6/1U6/2C6/2E6 2R6/2U6/3C6/3E6/3R6/3U6/5R6 | E | 1390 | AKK,ANW,APE,AQQ | M | + | | 08/99 ▸ 11/01 | 6K0121191L | |
| 1.6 i 6K1/2H6/2S6/2T6/3H6/3T6/5T6 | E | 1595 | AKL,APF | M | + | | 06/99 ▸ 11/01 | 6K0121191L | |
| 1.6 i 6K1/2S6/2T6/3T6/5T6 | E | 1595 | AKL | M | - | | 06/99 ▸ 11/01 | 6K0121191K | |
| 1.6 i 6K1/2G8/3G8 | E | 1595 | AEH | A | + | | 01/00 ▸ 11/01 | 6K0121191L | |
| 1.6 i 6K1/2G8/3G8 | E | 1595 | AEH | A | - | | 01/00 ▸ 11/01 | 6K0121191K | |
| 1.6 i 6K1/2F1/3F1 | E | 1598 | ALM | M | + | | 08/99 ▸ 11/01 | 6K0121191L | |
| 1.8 i Turbo 20V 6K16J6 | E | 1781 | AQX | M | + | | 12/99 ▸ 11/01 | 6K0121191M | |
| 1.8 i Turbo 20V 6K16J6 | E | 1781 | AQX | M | - | | 12/99 ▸ 11/01 | 6K0121191K | |
| 1.9 SDi 6K1/1K6/1M6/2K6/2M6 3K6/3M6 | D | 1896 | AGP,AQM | M | + | | 05/99 ▸ 11/01 | 6K0121191L | |
| 1.9 TDi 6K1/2L6/2N6/3L6/3N6 3X6/5L6/5N6/5X6 | D | 1896 | AGR,ALH,ASV | M | - | | 05/99 ▸ 11/01 | 6K0121191K | |
| **IBIZA (2001>)** | | | | | | | | | |
| 1.4 TDi 6L1564 | D | 1422 | BNV | M | +/- | | 05/05 ▸ 11/09 | 6Q0959455D | •696375 |

| Type Ctr. | | CC | | | AC | | | OE | Valeo | |
|---|---|---|---|---|---|---|---|---|---|---|
| **SEAT (.../...)** | | | | | | | | | | |
| **IBIZA VI (2008>)** | | | | | | | | | | |
| 1.2 i 12V 6J1/2C4/3C4/5C4, 6J5 2C4/3C4 | E | 1198 | BZG | M | +/- | | 03/08 ▸ 05/10 | 6Q0959455D | •696375 | |
| **SEAT** | | | | | | | | | | |
| **INCA** | | | | | | | | | | |
| 1.9 D 6K9/1Y1/2Y1/3Y1/4Y1 | D | 1896 | 1Y | M | - | C | 11/95 ▸ 06/03 | 6K0121191A | 698321 | |
| **SKODA** | | | | | | | | | | |
| **FABIA (99>2004)** | | | | | | | | | | |
| 1.4 TDi 6Y2/144/244/344, 6Y3 144/244/344, 6Y5/144/244/344 | D | 1422 | AMF | M | - | C | 04/03 ▸ 07/04 | 6Q0959455D | •696375 | |
| **FABIA (FL) (2004>2007)** | | | | | | | | | | |
| 1.4 TDi 6Y2/144/244/344, 6Y3 144/244/344, 6Y5/144/244/344 | D | 1422 | AMF | M | - | | 08/04 ▸ 04/07 | 6Q0959455D | •696375 | |
| 1.9 SDi 6Y2/124/224/324, 6Y3 124/224/324, 6Y5/124/224/324/P24 | D | 1896 | ASY | M | + | | 08/04 ▸ 12/07 | 6Q0959455D | •696375 | |
| **FABIA II (2007>)** | | | | | | | | | | |
| 1.4 TDI 542/114/134/214/234 314/334/414/434 | D | 1422 | BNM,BNV | M | - | | 01/07 ▸ | 6Q0959455D | •696375 | |
| **ROOMSTER (2006>2010)** | | | | | | | | | | |
| 1.4 TDi 5J7/114/134/214/234 314/334/414/434 | D | 1422 | BNM,BNV | M | - | | 05/06 ▸ 03/10 | 6Q0959455D | •696375 | |
| 1.9 TDi 5J7/164/174/264/274 364/374/464/474 | D | 1896 | BLS,BSW | M | | | 05/06 ▸ 03/10 | 6Q0959455D | •696375 | |
| **VAUXHALL** | | | | | | | | | | |
| **AGILA (2000>2007)** | | | | | | | | | | |
| 1.0 i 12V | E | 973 | Z10XE | M | | | 06/00 ▸ 08/03 | 09204168 | 698552 | |
| 1.0 i Twinport 12V | E | 998 | Z10XEP | M | | | 08/03 ▸ 12/07 | 09204168 | 698552 | |
| 1.2 i 16V | E | 1199 | Z12XE | M | | | 07/00 ▸ 08/04 | 09204168 | 698552 | |
| 1.2 i Twinport 16V | E | 1229 | Z12XEP | M | | | 09/04 ▸ 12/07 | 09204168 | 698552 | |
| **ASTRA III (91>98)** | | | | | | | | | | |
| 1.4,1.4 i,1.4 i 16V S2559352, S5060107 ▸ | E | 1389 | C14NV,C14NZ,C14SE,X14NZ,X14XE | M | + | | 1995 ▸ 03/98 | 90511262 | | |
| 1.4,1.4 i ▸ S2559351, S4000000 | E | 1389 | 14NV,C14NV,C14NZ,C14SE,X14NZ | M | + | | 09/91 ▸ 1995 | 90510210 | 696172 | |
| 1.6 i,1.6 i 16V S5060107, S2559352 ▸ | E | 1598 | 16LZ2,C16NZ,C16SE,X16SZ X16XEL | M | + | | 1995 ▸ 03/98 | 90511262 | | |
| 1.6 i,1.6 i 16V ▸ S2559351, S4000000 | E | 1598 | 16LZ2,C16NZ,C16SE,X16SZ X16XEL | M | + | | 09/91 ▸ 1995 | 90510210 | 696172 | |
| 1.8 i | E | 1796 | C18NZ | M | + | | 10/91 ▸ 07/94 | 90510210 | 696172 | |
| 1.8 i 16V S4000001, S2559352 ▸ | E | 1799 | C18XEL | M | + | | 1995 ▸ 03/98 | 90511262 | | |
| 1.8 i 16V ▸ S4000000, S2559351 | E | 1799 | C18XE,C18XEL | M | + | | 06/93 ▸ 1995 | 90510210 | 696172 | |
| 2.0 i,2.0 i 16V S4000001, S2559352 ▸ | E | 1998 | C20NE,C20XE,X20XEV | M | + | | 1995 ▸ 03/98 | 90511262 | | |
| 2.0 i,2.0 i 16V ▸ S2559351, S4000000 | E | 1998 | C20NE,C20XE,X20XEV | M | + | | 09/91 ▸ 1995 | 90510210 | 696172 | |
| 1.7 TD Turbo S2559352, S4000001 ▸ | D | 1686 | 17TD | M | + | | 1995 ▸ 03/98 | 90511262 | | |
| 1.7 TD Turbo ▸ S5060106, S4000000 | D | 1686 | 17TD | M | + | | 09/91 ▸ 1995 | 90510210 | 696172 | |
| 1.7 D,1.7 TD Turbo S5060107, S2559352 ▸ | D | 1699 | 17D,X17DTL | M | + | | 1995 ▸ 03/98 | 90511262 | | |
| 1.7 D,1.7 TD Turbo | D | 1699 | 17D,17DR,X17DTL | M | + | | 09/91 ▸ 1995 | 90510210 | 696172 | |
| **ASTRA IV (98>)** | | | | | | | | | | |
| 2.0 i 16V | E | 1998 | X20XEV | M | + | | 04/98 ▸ 02/04 | 24431829 | •696355 | |

Fan System Groupe moto-ventilateur Lüftersystem Gruppo Motoventilatore Fan-systeem Fan sistemi
Grupo motorventilador Модуль вентилятора ventilátor rendszer Modul sahary Modul ventilator Σύστημα ανεμιστήρα



• **New** Nouveau **Nuevo** Novo **Nuovo** Nieuw **Neu** Nowość **Yeni** Новый Νέο **Novy**

| | | CC | | AC | | | OE | Valeo | |
|---|---|---|---|---|---|---|---|---|---|
| **VAUXHALL (.../...)** | | | | | | | | | |
| **ASTRA IV (98>) (.../...)** | | | | | | | | | |
| 1.7 CDTi | D | 1686 | Z17DTL | M | + | | 04/03 ▸ 12/05 | 24431829 | •696355 |
| 1.7 D Turbo | D | 1699 | X17DTL | M | + | | 04/98 ▸ 02/04 | 24431829 | •696355 |
| 2.0 Di 16V | D | 1995 | X20DTL,Y20DTL | M | + | | 04/98 ▸ 02/04 | 24431829 | •696355 |
| **CORSA II (2000>2003)** | | | | | | | | | |
| 1.4 i 16V | E | 1389 | Z14XE | M | - | | 09/00 ▸ 08/03 | 24445183 | •696382 |
| 1.4 i 16V | E | 1389 | Z14XE | M | - | | 09/00 ▸ 08/03 | 24402524 | •696383 |
| 1.4 i 16V | E | 1389 | Z14XE | A | + | | 09/00 ▸ 08/03 | 24445185 | •696381 |
| 1.0 i 12V | E | 973 | Z10XE | M | + | | 08/01 ▸ 08/03 | 24421234 | •696369 |
| 1.0 i 12V | E | 973 | Z10XE | M | - | | 09/00 ▸ 08/03 | 24402524 | •696383 |
| 1.2 i 16V | E | 1199 | Z12XE | M | + | | 08/01 ▸ 08/03 | 24421234 | •696369 |
| 1.8 i 16V | E | 1796 | Z18XE | M | + | | 09/00 ▸ 08/03 | 24445185 | •696381 |
| 1.8 i 16V | E | 1796 | Z18XE | M | - | | 09/00 ▸ 08/03 | 24402524 | •696383 |
| 1.8 i 16V | E | 1796 | Z18XE | M | - | | 09/00 ▸ 08/03 | 24445183 | •696382 |
| **CORSA II (2003>2006)** | | | | | | | | | |
| 1.0 i 12V AB68C, AC08C, AC68C<br>1.0 i Twinport 12V AE08C, AE68C, AB08C | E | 998 | Z10XEP | M | + | | 09/03 ▸ 10/06 | 24421234 | •696369 |
| 1.2 i 16V A.68E, AB08E, AB68E AC08E, AC68E, AE08E, AE68E, A.08/E | E | 1199 | Z12XE | M | + | | 09/03 ▸ 10/06 | 24421234 | •696369 |
| 1.4 i Twinport 16V AE68G, AS08G, AS68G AE08/G | E | 1364 | Z14XEP | M | + | | 09/03 ▸ 10/06 | 24421234 | •696369 |
| 1.4 i Twinport 16V | E | 1364 | Z14XEP | A | + | | 09/03 ▸ 10/06 | 24421234 | •696369 |
| 1.4 i Twinport 16V AE68G, AS08G, AS68G AE08/G | E | 1364 | Z14XEP | M | - | | 09/03 ▸ 10/06 | 24402524 | •696383 |
| 1.4 i Twinport 16V AE68G, AS08G, AS68G AE08/G | E | 1364 | Z14XEP | M | - | | 09/03 ▸ 10/06 | 24445183 | •696382 |
| 1.4 i Twinport 16V | E | 1364 | Z14XEP | A | - | | 09/03 ▸ 10/06 | 24402524 | •696383 |
| 1.4 i Twinport 16V | E | 1364 | Z14XEP | A | - | | 09/03 ▸ 10/06 | 24445183 | •696382 |
| 1.8 i 16V AS08K, AS68K | E | 1796 | Z18XE | M | + | | 09/03 ▸ 10/06 | 24421234 | •696369 |
| 1.8 i 16V AS08K, AS68K | E | 1796 | Z18XE | M | - | | 09/03 ▸ 10/06 | 24402524 | •696383 |
| 1.8 i 16V AS08K, AS68K | E | 1796 | Z18XE | M | - | | 09/03 ▸ 10/06 | 24445183 | •696382 |
| 1.0 i 12V AB68C, AC08C, AC68C<br>1.0 i Twinport 12V AE08C, AE68C, AB08C | E | 998 | Z10XEP | M | - | | 09/03 ▸ 10/06 | 24402524 | •696383 |
| **VECTRA (2002>2005)** | | | | | | | | | |
| 1.8 i 16V | E | 1796 | Z18XE | M | + | | 04/02 ▸ 09/05 | 24410993 | •696387 |
| **VECTRA (2005>)** | | | | | | | | | |
| 2.0 i Turbo 16V | E | 1998 | Z20NET | M | | | 10/05 ▸ 02/09 | 24410993 | •696387 |
| 2.2 DGI 16V | E | 2198 | Z22YH | M | + | | 10/05 ▸ 02/09 | 24410993 | •696387 |
| 2.2 DGI 16V | E | 2198 | Z22YH | A | + | | 10/05 ▸ 02/09 | 24410993 | •696387 |
| **ZAFIRA (99>2003)** | | | | | | | | | |
| 2.0 Di 16V F75L | D | 1995 | X20DTL | M | + | | 05/99 ▸ 06/03 | 24431829 | •696355 |
| **ZAFIRA (2003>)** | | | | | | | | | |
| 2.2 i 16V QD75P | E | 2198 | Z22SE | M | + | | 07/03 ▸ 06/05 | 24431829 | •696355 |
| 2.2 i 16V QD75P | E | 2198 | Z22SE | A | + | | 07/03 ▸ 06/05 | 24431829 | •696355 |
| 2.0 DTI 16V QG75M, QM75M, QX75M QD75/M | D | 1995 | X20DTH | M | + | | 07/03 ▸ | 24431829 | •696355 |
| 2.0 DTI 16V QG75M, QM75M | D | 1995 | X20DTH | A | + | | 07/03 ▸ | 24431829 | •696355 |
| 2.2 DTI 16V QD75P, QX75P | D | 2171 | Y22DTR | M | + | | 07/03 ▸ | 24431829 | •696355 |
| **VAUXHALL** | | | | | | | | | |
| **COMBO (2001>2004)** | | | | | | | | | |
| 1.6 i | E | 1598 | Z16SE/E4 | M | + | | 01/04 ▸ 06/04 | 24421234 | •696369 |
| 1.6 i | E | 1598 | Z16SE/E4 | M | - | | 10/01 ▸ 06/04 | 24402524 | •696383 |
| 1.7 DTi 16V,1.7 Di 16V | D | 1686 | Y17DT,Y17DTL | M | - | | 01/03 ▸ | 24402524 | •696383 |
| **VOLKSWAGEN** | | | | | | | | | |
| **FOX** | | | | | | | | | |
| 1.4 TDi 5Z1/1/4 | D | 1422 | BNM | M | +/- | | 11/04 ▸ | 6Q0959455D | •696375 |
| **POLO (99>2001)** | | | | | | | | | |
| 1.4 i,1.4 i 16V 6V20, 6V50 | E | 1390 | AKK,ANW,APE,AUD | M | + | | 10/99 ▸ 09/01 | 6K0121191K | |

# VOLKSWAGEN (.../...)

## POLO (99>2001) (.../...)

| Type Ctr. | | CC | | | AC | | 2+3 | OE | Valeo | |
|---|---|---|---|---|---|---|---|---|---|---|
| 1.4 i 16V | 6V20, 6V50 | E | 1390 | AUA | M | + | 06/00 ▸ 09/01 | 6K0121191L | | |
| 1.6 i | 6V20, 6V50 | E | 1595 | AKL | M | + | 10/99 ▸ 09/01 | 6K0121191K | | |
| 1.6 i | 6V20, 6V50 | E | 1595 | APF | M | + | 03/00 ▸ 10/00 | 6K0121191L | | |
| 1.6 i | 6V20, 6V50 | E | 1595 | AEH | A | + | 10/99 ▸ 09/01 | 6K0121191L | | |
| 1.6 i | 6V20, 6V50 | E | 1595 | AEH | A | - | 10/99 ▸ 09/01 | 6K0121191K | | |
| 1.6 i,1.6 i 16V | 6V20, 6V50 | E | 1598 | ALM,AUR | M | + | 10/99 ▸ 09/01 | 6K0121191K | | |
| 1.6 i 16V | 6N26 | E | 1598 | AVY | M | - | 05/00 ▸ 09/01 | 6Q0959455D | •696375 | |
| 1.9 SDi | 6V50 | D | 1896 | AGP,AQM | M | + | 10/99 ▸ 09/01 | 6K0121191K | | |
| 1.9 SDi,1.9 TDi | 6V20, 6V50 | D | 1896 | AGP,AGR,ALH,AQM,ASV | M | + | 10/99 ▸ 09/01 | 6K0121191L | | |
| 1.9 TDi | 6V20, 6V50 | D | 1896 | AGR,ALH,ASV | M | - | 10/99 ▸ 09/01 | 6K0121191K | | |

## POLO (2001>)

| | | | | | | | | | | |
|---|---|---|---|---|---|---|---|---|---|---|
| 1.4 TDi | 9N1/0/1/2/3/5 | D | 1422 | AMF,BAY | M | - | 11/01 ▸ 05/05 | 6Q0959455D | •696375 | |
| 1.9 TDi | 9N15 | D | 1896 | AXR | M | - | 11/03 ▸ 05/05 | 6Q0959455D | •696375 | |

## POLO (2005>)

| | | | | | | | | | | |
|---|---|---|---|---|---|---|---|---|---|---|
| 1.4 TDi | 9N3/0/1/3/5 | D | 1422 | BNM,BNV | M | - | 04/05 ▸ | 6Q0959455D | •696375 | |

## TOUAREG (2002>2006)

| | | | | | | | | | | |
|---|---|---|---|---|---|---|---|---|---|---|
| 3.2 i V6 24V | 7LAA | E | 3189 | AZZ,BKJ,BMV | M | | 01/03 ▸ 11/06 | 7L0121207D | •696388 | |
| 3.2 i V6 24V | 7LA/A/B | E | 3189 | AZZ,BKJ,BMV | A | | 11/02 ▸ 05/05 | 7L0121207E | •696389 | |
| 4.2 i V8 40V | 7LA/A/B/C/D | E | 4172 | AXQ | A | | 12/02 ▸ 11/06 | 7L0121207E | •696389 | |
| 6.0 i W12 48V | 7LA/A/F | E | 5998 | BJN | A | | 08/04 ▸ | 7L0121207E | •696389 | |
| 2.5 TDi | 7LAA | D | 2460 | BAC,BLK | M | | 01/03 ▸ 11/06 | 7L0121207E | •696389 | |
| 2.5 TDi | 7LAA | D | 2460 | BAC,BLK | M | | 04/05 ▸ 11/06 | 7L0121207D | •696388 | |
| 7L-5-075 001 ▸ | | | | | | | | | | |
| 2.5 TDi | 7LAA | D | 2460 | BAC,BLK | A | | 04/05 ▸ 11/06 | 7L0121207D | •696388 | |
| 7L-5-075 001 ▸ | | | | | | | | | | |
| 3.0 TDi V6 | 7LAA | D | 2967 | BKS | M | | 11/04 ▸ 11/06 | 7L0121207E | •696389 | |
| 3.0 TDi V6 | 7LAA | D | 2967 | BKS | A | | 11/04 ▸ 11/06 | 7L0121207E | •696389 | |
| 5.0 TDi V10 | 7LAA | D | 4921 | AYH | A | | 11/02 ▸ 11/06 | 7L0121207E | •696389 | |

## TOUAREG II (2006>2010)

| | | | | | | | | | | |
|---|---|---|---|---|---|---|---|---|---|---|
| 3.6 FSi V6 24V | 7L6/0/5 | E | 3597 | BHK | A | | 12/06 ▸ 05/10 | 7L0121207E | •696389 | |
| 4.2 FSi V8 32V | 7L6/0/6 | E | 4163 | BAR | A | | 12/06 ▸ 05/10 | 7L0121207E | •696389 | |
| 6.0 i W12 48V | 7L60 | E | 5998 | BJN | A | | 12/06 ▸ 05/10 | 7L0121207E | •696389 | |
| 2.5 TDi | 7L60 | D | 2460 | BPD,BPE | M | | 12/06 ▸ 05/10 | 7L0121207D | •696388 | |
| 2.5 TDi | 7L60 | D | 2460 | BPD,BPE | M | | 12/06 ▸ 05/10 | 7L0121207E | •696389 | |
| 2.5 TDi | 7L60 | D | 2460 | BPD,BPE | A | | 12/06 ▸ 05/10 | 7L0121207D | •696388 | |
| 2.5 TDi | 7L60 | D | 2460 | BPD,BPE | A | | 12/06 ▸ 05/10 | 7L0121207E | •696389 | |
| 3.0 TDi V6 24V | 7L60 | D | 2967 | BKS | M | | 12/06 ▸ 05/08 | 7L0121207E | •696389 | |
| 3.0 TDi V6 24V | 7L60 | D | 2967 | BKS,CASC/F | M | | 12/06 ▸ 05/10 | 7L0121207D | •696388 | |
| 3.0 TDi V6 24V | 7L60 | D | 2967 | BKS | A | | 12/06 ▸ 05/08 | 7L0121207E | •696389 | |
| 3.0 TDi V6 24V | 7L60 | D | 2967 | BKS,BUN,CASA/F | A | | 12/06 ▸ 05/10 | 7L0121207D | •696388 | |
| 5.0 TDi V10 20V | 7L6/0/8 | D | 4921 | BLE | A | | 12/06 ▸ 05/10 | 7L0121207E | •696389 | |

Fan System Groupe moto-ventilateur Lüftersystem Gruppo Motoventilatore Fan-systeem Fan sistemi
Grupo motorventilador Модуль вентилятора ventilátor rendszer Modul sahary Modul ventilator Σύστημα ανεμιστήρα



• **New** Nouveau **Nuevo** Novo **Nuovo** Nieuw **Neu** Nowość **Yeni** Новый Νέο **Novy**

| | | | CC | | | AC | | | OE | Valeo | |
|---|---|---|---|---|---|---|---|---|---|---|---|
| **AUDI** | | | | | | | | | | | |
| **80 (72>81)** | | | | | | | | | | | |
| 1.3 | | E | 1272 | FY,FZ | M | - | | 09/78 ▸ 07/81 | 165959455T | **698368** | |
| 1.3 | | E | 1272 | FY,FZ | M | - | | 09/78 ▸ 07/81 | 165959455L | **696031** | |
| 1.3 | | E | 1297 | ZA,ZF | M | +/- | | 05/72 ▸ 07/78 | 165959455T | **698368** | |
| 1.5 | | E | 1471 | ZB,ZC | M | +/- | | 03/73 ▸ 08/75 | 165959455T | **698368** | |
| 1.6 | | E | 1588 | FS,XX,YP,YS | M | +/- | | 09/73 ▸ 07/81 | 165959455T | **698368** | |
| 1.6,1.6 i | 8112, 8122 | E | 1588 | WY,YG,YH,YK,YN,YP,YT,YY,YZ | M | - | Left/gauche | 09/75 ▸ 07/81 | 165959455T | **698368** | |
| 1.6,1.6 i | 8112, 8122 | E | 1588 | WY,YG,YH,YK,YN,YP,YS,YT,YY,YZ | M | - | | 09/75 ▸ 07/81 | 165959455L | **696031** | |
| 1.6,1.6 i | | E | 1588 | YH,YN | A | +/- | | 07/75 ▸ 08/80 | 165959455T | **698368** | |
| 1.6,1.6 i | | E | 1588 | WY,WZ,YH,YN,YP,YT,YY | A | - | | 07/75 ▸ 07/81 | 165959455L | **696031** | |
| 1.6 | | E | 1588 | WY,WZ,YN,YP,YT,YY | A | - | Left/gauche | 09/75 ▸ 07/81 | 165959455T | **698368** | |
| 1.7 i | | E | 1715 | WT | M | - | Left/gauche | 08/80 ▸ 07/81 | 165959455T | **698368** | |
| 1.7 i | | E | 1715 | WT | M | - | | 08/80 ▸ 07/81 | 165959455L | **696031** | |
| **80 (81>86)** | | | | | | | | | | | |
| 1.3 | 811/0/1, 813/0/1/2 | E | 1297 | EP | M | - | | 08/81 ▸ 03/87 | 165959455L | **696031** | |
| 1.3 | 811/0/1, 813/0/1/2 | E | 1297 | EP | M | | | 08/81 ▸ 03/87 | 165959455T | **698368** | |
| 1.6 | 811/1/2/B/C, 813/0/1/2/B/C, 814/0/1/2/B/C | E | 1588 | WV,WY,YP | M | - | | 08/81 ▸ 07/84 | 165959455L | **696031** | |
| 1.6 | 811/1/2/B/C, 813/0/1/2/B/C, 814/0/1/2/B/C | E | 1588 | WV,WY,YP | M | | | 08/81 ▸ 07/84 | 165959455T | **698368** | |
| 1.6 | 811/1/2, 813/0/1/2, 814/0/2 | E | 1588 | WV,YP | A | - | | 08/81 ▸ 07/83 | 165959455L | **696031** | |
| 1.6 | 811/1/2, 813/0/1/2, 814/0/2 | E | 1588 | WV,YP | A | | | 08/81 ▸ 07/83 | 165959455T | **698368** | |
| 1.6,1.6 i | 811/0/1/2/G/H, 813/0 1/2/G/H/J, 814/0/1/2 | E | 1595 | DT,JU,SA | M | - | | 08/81 ▸ 03/87 | 165959455L | **696031** | |
| 1.6,1.6 i | 811/0/1/2/G/H, 813/0 1/2/G/H/J, 814/0/1/2 | E | 1595 | DT,JU,SA | M | | | 08/81 ▸ 03/87 | 165959455T | **698368** | |
| 1.6,1.6 i | 811/0/1/2/G/H, 813/0 1/2/G/H/J, 814/0/1/2 | E | 1595 | DT,JU,SA | A | - | | 08/83 ▸ 03/87 | 165959455L | **696031** | |
| 1.6,1.6 i | 811/0/1/2/G/H, 813/0 1/2/G/H/J, 814/0/1/2 | E | 1595 | DT,JU,SA | A | | | 08/83 ▸ 03/87 | 165959455T | **698368** | |
| 1.7 i | 8142, 813/1/2 | E | 1715 | WT | M | - | | 08/81 ▸ 07/83 | 165959455T | **698368** | |
| 1.7 i | 8142, 813/1/2 | E | 1715 | WT | M | - | | 08/81 ▸ 07/83 | 165959455L | **696031** | |
| 1.7 i | 8132, 8142 | E | 1715 | WT | A | - | | 08/82 ▸ 07/83 | 165959455L | **696031** | |
| 1.7 i | 8132, 8142 | E | 1715 | WT | A | - | | 08/82 ▸ 07/83 | 165959455T | **698368** | |
| 1.8,1.8 i | 811/0/1/2/5/B/C/G/H 813/0/1/2/5/8/B/C/G/H/J, 814/0/1/2/5/8/B/C | E | 1781 | DS,DZ,JN,JV,MU,NE,SF | M | - | | 01/83 ▸ 03/87 | 165959455L | **696031** | |
| 1.8,1.8 i | 811/0/1/2/5/B/C/G/H 813/0/1/2/5/8/B/C/G/H/J, 814/0/1/2/5/8/B/C | E | 1781 | DS,DZ,JN,JV,MU,SF | M | | | 01/83 ▸ 03/87 | 165959455T | **698368** | |
| 1.8,1.8 i | 811/0/1/5, 8140, 813 0/1/5 81-G-000 000, 81-G-000 001 ▸ | E | 1781 | DZ,JN,MU,NE | M | | | 08/83 ▸ 08/86 | 327959455A | **696038** | |
| 1.8,1.8 i | 811/1/2/G/H, 813/0/1 2/8/G/H/J, 814/0/1/2/8 | E | 1781 | DS,JN,JV,SF | A | - | | 08/81 ▸ 03/87 | 165959455L | **696031** | |
| 1.8,1.8 i | 811/1/2/G/H, 813/0/1 2/8/G/H/J, 814/0/1/2/8 | E | 1781 | DS,JN,JV,SF | A | | | 08/81 ▸ 03/87 | 165959455T | **698368** | |
| 1.8 i | 8131 | E | 1781 | JN | A | | | 08/83 ▸ 03/87 | 327959455A | **696038** | |
| 2.0 i | 813/1/3 | E | 1994 | HP | M | - | | 08/82 ▸ 07/84 | 165959455L | **696031** | |
| 2.0 i | 8142, 813/1/2/3 | E | 1994 | HP,JL | A | - | | 08/82 ▸ 07/84 | 165959455L | **696031** | |
| 2.0 i | 8132, 8142 | E | 1994 | JL | A | | | 08/83 ▸ 07/84 | 165959455T | **698368** | |
| 1.6 D,1.6 TD | 811/0/1/2, 813/0/1/2 814/0/1/2 | D | 1588 | CR,CY,JK | M | - | | 08/81 ▸ 03/87 | 165959455L | **696031** | |
| 1.6 D,1.6 TD | 811/0/1/2, 813/0/1/2 3, 814/0/1/2 | D | 1588 | CR,CY,JK | M | - | | 08/81 ▸ 03/87 | 165959455T | **698368** | |
| 1.6 D | 811/0/1/2, 8141, 813/0/1/2 | D | 1588 | CR | M | | | 08/81 ▸ 07/82 | 165959455T | **698368** | |
| 1.6 D | 811/0/1/2, 813/0/1/2 | D | 1588 | CR,JK | A | - | | 08/81 ▸ 03/87 | 165959455L | **696031** | |
| 1.6 D | 811/0/1/2, 813/0/1/2 | D | 1588 | JK | A | - | | 08/82 ▸ 03/87 | 165959455T | **698368** | |
| 1.6 D | 811/0/1/2, 813/0/1/2 | D | 1588 | CR | A | | | 08/81 ▸ 07/82 | 165959455T | **698368** | |
| **80 (86>91)** | | | | | | | | | | | |
| 1.6 | 8940, 8A20, 893/0 | E | 1595 | PP,RN | M | - | | 09/86 ▸ 08/91 | 165959455T | **698368** | |
| 1.6 | 8940, 8A20, 893/0 | E | 1595 | RN,RNA | M | - | | 09/86 ▸ 08/91 | 165959455L | **696031** | |
| 1.6 | 8A20 | E | 1595 | RN | A | - | | 08/89 ▸ 08/91 | 165959455T | **698368** | |
| 1.6 | 8A20 | E | 1595 | RN | A | - | | 08/89 ▸ 08/91 | 165959455L | **696031** | |
| 1.8 | 8930, 8A20 | E | 1781 | SF | M | - | | 09/86 ▸ 07/90 | 327959455A | **696038** | |
| 1.8,1.8 i | 8940, 8A20, 893/0/O | E | 1781 | DZ,JN,JV,NE,PM,SF | M | - | | 09/86 ▸ 09/91 | 165959455L | **696031** | |
| 1.8 | 8940, 8A20, 893/0 | E | 1781 | RU | M | - | | 10/86 ▸ 01/90 | 165959455T | **698368** | |
| 1.8 | 8930, 8A20 | E | 1781 | SF | A | - | | 09/86 ▸ 01/90 | 327959455A | **696038** | |
| 1.8,1.8 i | 8940, 8A20, 893/0/O | E | 1781 | JN,JV,NE,PM,SF | A | - | | 09/86 ▸ 08/91 | 165959455L | **696031** | |
| 1.8 | 8940, 8A20, 893/0 | E | 1781 | RU | A | - | | 10/86 ▸ 01/90 | 165959455T | **698368** | |
| 1.9 i | 8948, 893/0/1 | E | 1857 | SD | M | - | | 08/86 ▸ 07/89 | 165959455L | **696031** | |
| 1.9 i | 893/0/1, 894/1/8 | E | 1857 | SD | A | - | | 08/86 ▸ 07/89 | 165959455L | **696031** | |

| Type | Ctr. | | CC | | AC | | | OE | Valeo | |
|---|---|---|---|---|---|---|---|---|---|---|
| **AUDI** (.../...) | | | | | | | | | | |
| **80 (86>91) (.../...)** | | | | | | | | | | |
| 1.6 D,1.6 TD | 8940, 8A20, 893/0 | D | 1588 | JK,RA,SB | M | - | | 02/87 ▸ 08/91 | 165959455T | **698368** |
| **90 (87>91)** | | | | | | | | | | |
| 1.8 i | 8940, 8A27 | E | 1781 | DZ | M | - | | 01/88 ▸ 12/91 | 165959455L | **696031** |
| 1.6 TD | 8937, 8A27 | D | 1588 | RA,SB | M | - | | 04/88 ▸ 12/91 | 165959455T | **698368** |
| **100 (71>82)** | | | | | | | | | | |
| 1.6 | 431/0/1, 432/0/1, 433/0/1/2/B/C/T, 434/0/1/2 B/C, 435/1/2, 8050, 8070, 436/1/2 | E | 1588 | YM,YV | M | | | 08/74 ▸ 07/82 | 165959455T | **698368** |
| 1.6 | 431/0/1, 433/0/1/2/B/C/T, 434/0/1/2/B/C, 435 1/2, 436/1/2 | E | 1588 | YV | M | | | 08/79 ▸ 07/82 | 165959455L | **696031** |
| 1.6 | 431/0/1, 432/0/1, 433/0/1/2/T, 434/0/1, 435 1/2, 436/1/2 | E | 1588 | YV | A | | | 08/76 ▸ 07/82 | 165959455T | **698368** |
| 1.6 | 431/0/1, 433/0/1/2/T, 434/0/1, 435/1/2, 436 1/2 | E | 1588 | YV | A | | | 08/79 ▸ 07/82 | 165959455L | **696031** |
| 1.8 | | E | 1760 | ZU,ZZ | M | | | 08/71 ▸ 05/76 | 165959455T | **698368** |
| 1.8 | | E | 1760 | ZZ | A | | | 08/74 ▸ 05/76 | 165959455T | **698368** |
| 1.8 | | E | 1760 | ZU,ZZ | | | | 08/71 ▸ 09/72 | 165959455T | **698368** |
| 1.9 | | E | 1871 | ZJ | M | | | 08/74 ▸ 05/76 | 165959455T | **698368** |
| 1.9 | | E | 1871 | ZJ,ZN,ZX | A | | | 08/71 ▸ 05/76 | 165959455T | **698368** |
| 1.9 | | E | 1871 | ZJ | | | | 08/71 ▸ 09/72 | 165959455T | **698368** |
| 1.9 | 4451 | E | 1921 | WH | M | | | 08/79 ▸ 07/81 | 165959455T | **698368** |
| 2.0 | 431/0/1, 432/0/1, 433/0/1/2, 434/0/1/2, 435 1/2, 436/1/2 | E | 1984 | WA | M | | | 06/76 ▸ 07/82 | 165959455T | **698368** |
| 2.0 | 4342 | E | 1984 | WA | M | | | 08/79 ▸ 07/82 | 165959455L | **696031** |
| 2.0 | 431/0/1, 432/0/1, 433/0/1/2, 434/0/1/2, 435 1/2, 436/1/2 | E | 1984 | WA,WF | A | | | 06/76 ▸ 07/82 | 165959455T | **698368** |
| 2.0 | 4342 | E | 1984 | WA | A | | | 08/79 ▸ 07/82 | 165959455L | **696031** |
| 2.0 | | E | 1984 | WA,WF | | | | 07/77 ▸ 07/78 | 165959455T | **698368** |
| 2.1 | 4342 | E | 2144 | WE | M | | | 06/77 ▸ 07/81 | 165959455T | **698368** |
| 2.2 | 4331 | E | 2144 | WB | A | | | 04/78 ▸ 07/82 | 165959455T | **698368** |
| **100 (82>90)** | | | | | | | | | | |
| 1.8 | 443/0/1/2/6, 4450, 444/0/6 | E | 1781 | DR | M | - | | 08/82 ▸ 10/86 | 165959455L | **696031** |
| 1.8,1.8 i | 443/0/1/2/6/C/G/J/K P, 444/0/2/6, 4462, 445/0/1/2/6/G/J/K/P | E | 1781 | 4B,DR,DS,JW,NP,PH,RS,SH | M | - | | 08/82 ▸ 12/90 | 165959455T | **698368** |
| 1.8,1.8 i | 443/G/J/K/P, 445/6/G J/K/P | E | 1781 | DR,NP,PH,SH | M | - | | 10/84 ▸ 12/90 | 327959455A | **696038** |
| 1.8,1.8 i | 443/0/2/3/G/P, 444/1 2, 445/0/1/2/6/P, 446/2/6 | E | 1781 | DR,DS,JW,NP,PH,RS | M | | | 08/82 ▸ 07/88 | 165959455T | **698368** |
| 1.8 | 444/1/2, 445/1/2/6, 446/2/6 | E | 1781 | DR | M | | | 08/82 ▸ 07/83 | 165959455L | **696031** |
| 1.8 | 443/0/1/2/3/6/C/P, 445/0/2/6/G/P | E | 1781 | JW,NP | M | | | 03/83 ▸ 07/89 | 327959455A | **696038** |
| 1.8 | 4446, 4452, 443/0/1/2/6 | E | 1781 | DR | A | - | | 08/82 ▸ 10/86 | 165959455L | **696031** |
| 1.8,1.8 i | 443/0/1/2/6/G/J/K/P 444/0/6/P, 445/0/2/G/J/K/P, 446/2/P | E | 1781 | 4B,DR,DS,JW,PH,SH | A | - | | 08/82 ▸ 12/90 | 165959455T | **698368** |
| 1.8,1.8 i | 443/G/J/K/P, 445/G/J K/P | E | 1781 | PH,SH | A | - | | 04/85 ▸ 07/90 | 327959455A | **696038** |
| 1.8 | 444/1/2, 445/0/1/6, 446/2/6 | E | 1781 | DR | A | | | 08/82 ▸ 07/83 | 165959455L | **696031** |
| 1.8,1.8 i | 443/G, 444/1/2, 445 0/1/6, 446/2/6 | E | 1781 | DR,DS,PH | A | | | 08/82 ▸ 12/87 | 165959455T | **698368** |
| 1.8 | 445G | E | 1781 | JW | A | | | 08/86 ▸ 12/87 | 327959455A | **696038** |
| 2.0 i | 446P | E | 1994 | RT | M | - | | 08/84 ▸ 07/89 | 165959455T | **698368** |
| 2.0 i | 4442 | E | 1994 | KP | A | - | | 04/85 ▸ 12/87 | 165959455T | **698368** |
| 2.2 i | 4432, 445J | E | 2226 | KU,WU | M | - | | 08/83 ▸ 12/87 | 165959455T | **698368** |
| 2.2 i | 443/2, 445/2/6 | E | 2226 | HX,KU | M | - | | 04/85 ▸ 12/87 | 327959455A | **696038** |
| 2.2 i | 4452 | E | 2226 | HX | A | - | | 08/89 ▸ 07/90 | 327959455A | **696038** |
| 2.3 i | 446P | E | 2309 | NF | A | - | | 01/88 ▸ 07/89 | 165959455T | **698368** |
| **A2 (2000>2005)** | | | | | | | | | | |
| 1.4 i 16V | 8Z00 | E | 1390 | AUA,BBY | M | +/- | C | 06/00 ▸ 08/05 | 8Z0959455C | |
| 1.6 FSI 16V | 8Z00 | E | 1595 | BAD | M | + | | 05/02 ▸ 08/05 | 8Z0959455C | |
| 1.2 TDi | 8Z0/D/E | D | 1191 | ANY | M | +/- | C | 04/01 ▸ 08/05 | 8Z0959455C | |
| 1.4 TDi | 8Z00 | D | 1422 | AMF,ATL,BHC | M | + | C | 06/00 ▸ 08/05 | 8Z0959455C | |
| **A3 (96>2003)** | | | | | | | | | | |
| 1.6 i | 8L1/0/A/B/C/H | E | 1595 | AEH,AKL,APF,AVU | M | +/- | | 09/96 ▸ 08/00 | 6X0959455A | **696042** |
| 1.6 i | 8L1/0/A/B/C/H | E | 1595 | AEH,AKL,APF,AVU | M | +/- | | 09/96 ▸ 08/00 | 1J0959455M | **698373** |
| 1.6 i | 8L1/A/B/C | E | 1595 | AKL,APF,AVU,BFQ | M | + | Right/Droite | 08/98 ▸ | 1J0959455M | **698373** |
| 1.6 i | 8L1/A/B/C | E | 1595 | AKL,AVU,BFQ | M | + | Left/gauche | 09/00 ▸ | 6X0959455A | **696042** |
| 1.6 i | 8L1/A/B/C | E | 1595 | AKL,AVU | M | - | C | 01/99 ▸ 08/00 | 6E0959455A | |

Fan Motor + Blades Moteur + hélice Lüftermotor + Lüfterrad Motorino + Ventola Ventilatormotor Fan motoru + Kanatlar
Moto-ventilador + Aspas Мотор вентилятора + лопасти вентилятора Ventilátor motor és lapát Motor sahary + vrtule Ventilator motor + Lame Μοτέρ ανεμιστήρων + Πτερωτές



• **New** Nouveau **Nuevo** Novo **Nuovo** Nieuw **Neu** Nowość **Yeni** Новый Νέο **Novy**

## A3 (96>2003) (.../...)

| | | | CC | | AC | | | | OE | Valeo | |
|---|---|---|---|---|---|---|---|---|---|---|---|
| 1.6 i | 8L1/A/B/C | E | 1595 | AVU,BFQ | M | - | | 09/00 ▸ | 6X0959455A | **696042** | |
| 1.6 i | 8L1/A/B/C | E | 1595 | AKL,AVU | M | | | 09/00 ▸ 06/03 | 6E0959455A | | |
| 1.6 i | 8L1/0/A/B/C/H | E | 1595 | AEH,AKL,APF | A | +/- | Left/gauche | 09/96 ▸ 06/01 | 6X0959455A | **696042** | |
| 1.6 i | 8L1/0/A/B/C/H | E | 1595 | AEH,AKL,APF | A | +/- | Right/Droite | 09/96 ▸ 06/01 | 1J0959455M | **698373** | |
| 1.6 i | 8L1/A/B/C | E | 1595 | AEH,APF,AVU,BFQ | A | + | | 06/99 ▸ | 1J0959455M | **698373** | |
| 1.6 i | 8L1/A/B/C | E | 1595 | AKL,AVU,BFQ | A | + | | 09/00 ▸ | 6X0959455A | **696042** | |
| 1.6 i | 8L1/0/A/B/C/H | E | 1595 | AEH,AKL,APF | A | - | | 09/96 ▸ 08/00 | 6E0959455A | | |
| 1.6 i | 8L1/A/B/C | E | 1595 | AEH,AVU,BFQ | A | - | | 09/00 ▸ | 6X0959455A | **696042** | |
| 1.6 i | 8L1/A/B/C | E | 1595 | AEH,AKL,AVU | A | | | 09/00 ▸ 04/02 | 6E0959455A | | |
| 1.8 i 20V,1.8 i Turbo 20V | 8L1/0/A/B/C/H | E | 1781 | AGN,AGU,AJQ,APG,APP,AQA,ARZ AUM,AUQ | M | +/- | | 09/96 ▸ | 1J0959455M | **698373** | |
| 1.8 i 20V,1.8 i Turbo 20V | 8L1/0/A/B/C/H | E | 1781 | AGN,AGU,AJQ,APG,APP,AQA,ARX ARZ,AUM,AUQ | M | +/- | | 09/96 ▸ | 6X0959455A | **696042** | |
| 1.8 i 20V,1.8 i Turbo 20V | 8L1/0/A/B/C | E | 1781 | AGN,AGU,APG,AQA,ARX,ARY,ARZ AUM,AUQ | M | + | Right/Droite | 08/97 ▸ | 1J0959455M | **698373** | |
| 1.8 i 20V,1.8 i Turbo 20V | 8L1/A/B/C | E | 1781 | AGU,APG,ARY,AUM,AUQ | M | + | Left/gauche | 09/00 ▸ | 6X0959455A | **696042** | |
| 1.8 i 20V,1.8 i Turbo 20V | 8L1/0/A/B/C/H | E | 1781 | AGN,AGU,APG,AQA,ARY,ARZ,AUM AUQ | M | - | C | 09/96 ▸ 06/03 | 6E0959455A | | |
| 1.8 i 20V,1.8 i Turbo 20V | 8L1/A/B/C | E | 1781 | AGN,AGU,ARX,ARY,AUQ | M | - | Left/gauche | 09/00 ▸ | 6X0959455A | **696042** | |
| 1.8 i Turbo 20V | 8L1/A/B/C | E | 1781 | AQA | M | | | 08/98 ▸ 08/00 | 6X0959455A | **696042** | |
| 1.8 i 20V,1.8 i Turbo 20V | 8L1/A/B/C | E | 1781 | AGN,AGU,APG,ARX,ARY,AUM,AUQ | M | | | 09/00 ▸ 06/03 | 6E0959455A | | |
| 1.8 i 20V,1.8 i Turbo 20V | 8L1/0/A/B/C/H | E | 1781 | AGN,AGU,AJQ,APG,ARZ | A | +/- | Right/Droite | 09/96 ▸ | 1J0959455M | **698373** | |
| 1.8 i 20V,1.8 i Turbo 20V | 8L1/0/A/B/C/H | E | 1781 | AGN,AGU,AJQ,APG,AQA,ARX,ARY ARZ | A | +/- | | 09/96 ▸ 06/03 | 6X0959455A | **696042** | |
| 1.8 i 20V,1.8 i Turbo 20V | 8L1/A/B/C | E | 1781 | AGN,AGU,APG,AQA,ARX,ARY,ARZ AUM,AUQ | A | + | | 08/98 ▸ | 1J0959455M | **698373** | |
| 1.8 i 20V,1.8 i Turbo 20V | 8L1/A/B/C | E | 1781 | AGU,APG,AQA,ARY,AUM,AUQ | A | + | Left/gauche | 09/00 ▸ | 6X0959455A | **696042** | |
| 1.8 i 20V,1.8 i Turbo 20V | 8L1/0/A/B/C/H | E | 1781 | AGN,AGU,APG,AQA,ARX,ARY,ARZ | A | - | | 09/96 ▸ 06/03 | 6E0959455A | | |
| 1.8 i 20V,1.8 i Turbo 20V | 8L1/A/B/C | E | 1781 | AGN,AGU,APG,ARY,AUM,AUQ | A | - | | 09/00 ▸ | 6X0959455A | **696042** | |
| 1.8 i 20V,1.8 i Turbo 20V | 8L1/A/B/C | E | 1781 | AGN,AGU,APG,ARY,AUM,AUQ | A | | | 09/00 ▸ 06/03 | 6E0959455A | | |
| 1.9 TDi | 8L1/0/A/B/C/H | D | 1896 | AGR,AHF,ALH,ASV,ASZ | M | +/- | Right/Droite | 09/96 ▸ | 1J0959455M | **698373** | |
| 1.9 TDi | 8L1/0/A/B/C/H | D | 1896 | AGR,AHF,ALH,ASV | M | +/- | Left/gauche | 09/96 ▸ | 6X0959455A | **696042** | |
| 1.9 TDi | 8L1/0/A/B/C | D | 1896 | ALH | M | +/- | | 08/97 ▸ 08/99 | 1J0959455F | | |
| 1.9 TDi | 8L1/A/B/C | D | 1896 | ALH,ASV,ASZ,AXR | M | + | Right/Droite | 09/99 ▸ | 1J0959455M | **698373** | |
| 1.9 TDi | 8L1/A/B/C | D | 1896 | AHF,ASZ,ATD,AXR | M | + | Left/gauche | 09/00 ▸ | 6X0959455A | **696042** | |
| 1.9 TDi | 8L1/0/A/B/C/H | D | 1896 | AGR,AHF,ALH,ASV | M | - | | 09/96 ▸ 08/00 | 6E0959455A | | |
| 1.9 TDi | 8L1/A/B/C | D | 1896 | AHF,ALH,ASV,ASZ,ATD,AXR | M | - | | 07/99 ▸ | 6X0959455A | **696042** | |
| 1.9 TDi | 8L1/0/A/B/C | D | 1896 | ALH | M | | | 08/97 ▸ 08/99 | 6X0959455A | **696042** | |
| 1.9 TDi | 8L1/A/B/C | D | 1896 | AHF,ALH,ASV,ASZ,ATD,AXR | M | | | 09/00 ▸ 06/03 | 6E0959455A | | |
| 1.9 TDi | 8L1/0/A/B/C/H | D | 1896 | AGR,AHF,ALH,ASV,ASZ | A | +/- | | 09/96 ▸ 06/03 | 6X0959455A | **696042** | |
| 1.9 TDi | 8L1/0/A/B/C/H | D | 1896 | AGR,AHF,ALH,ASV | A | +/- | | 09/96 ▸ 06/01 | 1J0959455M | **698373** | |
| 1.9 TDi | 8L1/0/A/B/C | D | 1896 | ALH | A | +/- | | 08/97 ▸ 08/99 | 1J0959455F | | |
| 1.9 TDi | 8L1/A/B/C | D | 1896 | ALH,ASZ | A | + | Right/Droite | 09/00 ▸ | 1J0959455M | **698373** | |
| 1.9 TDi | 8L1/A/B/C | D | 1896 | AHF,ASZ,ATD | A | + | Left/gauche | 09/00 ▸ | 6X0959455A | **696042** | |
| 1.9 TDi | 8L1/0/A/B/C/H | D | 1896 | AGR,AHF,ALH,ASZ | A | - | C | 09/96 ▸ 06/03 | 6E0959455A | | |
| 1.9 TDi | 8L1/A/B/C | D | 1896 | AHF,ALH,ASV,ASZ,ATD | A | - | | 07/98 ▸ | 6X0959455A | **696042** | |
| 1.9 TDi | 8L1/0/A/B/C | D | 1896 | ALH | A | | | 08/97 ▸ 08/99 | 6X0959455A | **696042** | |
| 1.9 TDi | 8L1/A/B/C | D | 1896 | AHF,ALH,ASV,ASZ,ATD | A | | | 09/00 ▸ 06/03 | 6E0959455A | | |

## A3 (2003>2008)

| | | | | | | | | | | | |
|---|---|---|---|---|---|---|---|---|---|---|---|
| 1.4 TFSi | 8P1/A/B/C, 8PA/A/B/C | E | 1390 | CAXC | M | +/- | Right/Droite | 09/07 ▸ 06/08 | 1K0959455DG | | |
| 1.4 TFSi | 8P1/A/B/C, 8PA/A/B/C | E | 1390 | CAXC | M | +/- | Left/gauche | 09/07 ▸ 06/08 | 1K0959455EA | | |
| 1.4 TFSi | 8P1/A/B/C, 8PA/A/B/C | E | 1390 | CAXC | M | + | Right/Droite | 09/07 ▸ 06/08 | 1K0959455DH | | |
| 1.4 TFSi | 8P1/A/B/C, 8PA/A/B/C | E | 1390 | CAXC | M | + | Left/gauche | 09/07 ▸ 06/08 | 1K0959455DL | | |
| 1.4 TFSi | 8P1/A/B/C, 8PA/A/B/C | E | 1390 | CAXC | A | +/- | Right/Droite | 03/08 ▸ 06/08 | 1K0959455DG | | |
| 1.4 TFSi | 8P1/A/B/C, 8PA/A/B/C | E | 1390 | CAXC | A | +/- | Left/gauche | 03/08 ▸ 06/08 | 1K0959455EA | | |
| 1.4 TFSi | 8P1/A/B/C, 8PA/A/B/C | E | 1390 | CAXC | A | + | Right/Droite | 03/08 ▸ 06/08 | 1K0959455DH | | |
| 1.4 TFSi | 8P1/A/B/C, 8PA/A/B/C | E | 1390 | CAXC | A | + | Left/gauche | 03/08 ▸ 06/08 | 1K0959455DL | | |
| 1.6 i | 8P1/A/B/C, 8PA/A/B/C | E | 1595 | BGU,BSE,BSF | M | + | Left/gauche | 05/03 ▸ 06/08 | 1K0959455EA | | |
| 1.6 i 8P-5-000 001 ▸ | 8P1/A/B/C, 8PA/A/B/C | E | 1595 | BGU,BSE,BSF | M | + | Left/gauche | 05/03 ▸ | 1K0959455P | | |
| 1.6 i 8-P-5-000 001 ▸ | 8P1/A/B/C, 8PA/A/B/C | E | 1595 | BGU | M | + | | 06/04 ▸ | 1K0959455R | | |
| 1.6 i 8P-5-000 001 ▸ | 8P1/A/B/C, 8PA/A/B/C | E | 1595 | BGU | M | + | Left/gauche | 06/04 ▸ | 1K0959455BC | | |
| 1.6 i | 8P1/A/B/C, 8PA/A/B/C | E | 1595 | BGU,BSE,BSF | M | + | Right/Droite | 06/04 ▸ 06/08 | 1K0959455DG | | |
| 1.6 i | 8P1/A/B/C, 8PA/A/B/C | E | 1595 | BGU,BSE,BSF | A | + | Left/gauche | 09/03 ▸ 06/08 | 1K0959455EA | | |
| 1.6 i | 8P1/A/B/C, 8PA/A/B/C | E | 1595 | BGU,BSE,BSF | A | + | Left/gauche | 09/03 ▸ | 1K0959455P | | |
| 1.6 i | 8P1/A/B/C, 8PA/A/B/C | E | 1595 | BGU,BSE,BSF | A | + | Right/Droite | 06/04 ▸ 06/08 | 1K0959455DG | | |

# AUDI (.../...)

## A3 (2003>2008) (.../...)

| Type Ctr. | | CC | | AC | | | OE | Valeo |
|---|---|---|---|---|---|---|---|---|
| 1.6 i<br>8-P-5-000 001 ▸ | 8P1/A/B/C, 8PA/A/B/C | E | 1595 | BGU | A | + | | 06/04 ▸ | 1K0959455R | |
| 1.6 i<br>8P-5-000 001 ▸ | 8P1/A/B/C, 8PA/A/B/C | E | 1595 | BGU | A | + | Left/gauche | 06/04 ▸ | 1K0959455BC | |
| 1.6 FSi | 8P1/A/B/C, 8PA/A/B/C | E | 1598 | BAG,BLF,BLP | M | + | Right/Droite | 10/03 ▸ 06/08 | 1K0959455DG | |
| 1.6 FSi | 8P1/A/B/C, 8PA/A/B/C | E | 1598 | BAG,BLF,BLP | M | + | Left/gauche | 10/03 ▸ | 1K0959455P | |
| 1.6 FSi | 8P1/A/B/C, 8PA/A/B/C | E | 1598 | BAG,BLP | M | + | | 10/03 ▸ | 1K0959455BC | |
| 1.6 FSi | 8P1/A/B/C, 8PA/A/B/C | E | 1598 | BAG,BLF,BLP | M | + | | 10/03 ▸ 06/08 | 1K0959455EA | |
| 1.6 FSi | 8P1/A/B/C, 8PA/A/B/C | E | 1598 | BAG,BLP | M | + | Right/Droite | 10/03 ▸ | 1K0959455R | |
| 2.0 FSi 16V,2.0 TFSi 16V | 8P1/A/B/C, 8PA/A/B/C | E | 1984 | AXX,BLR,BLX,BLY,BMB,BWA | M | +/- | Left/gauche | 01/04 ▸ 06/08 | 1K0959455DL | |
| 2.0 FSi 16V,2.0 TFSi 16V | 8P1/A/B/C, 8PA/A/B/C | E | 1984 | AXX,BLR,BLX,BLY,BMB,BWA | M | +/- | Left/gauche | 01/04 ▸ | 1K0959455N | |
| 2.0 FSi 16V,2.0 TFSi 16V | 8P1/A/B/C, 8PA/A/B/C | E | 1984 | AXX,BLR,BLX,BLY,BMB | M | +/- | Right/Droite | 01/04 ▸ 12/05 | 1K0959455DH | |
| 2.0 TFSi 16V | 8P1B, 8PAB | E | 1984 | AXX | M | +/- | Right/Droite | 09/04 ▸ | 1K0959455Q | |
| 2.0 FSi 16V | 8P1/A/B/C, 8PA/A/B/C | E | 1984 | BVY,BVZ | M | +/- | Right/Droite | 11/05 ▸ 06/08 | 1K0959455DG | |
| 2.0 FSi 16V | 8P1/A/B/C, 8PA/A/B/C | E | 1984 | BVY,BVZ | M | +/- | Left/gauche | 11/05 ▸ 06/08 | 1K0959455EA | |
| 2.0 FSi 16V | 8P1/A/B/C, 8PA/A/B/C | E | 1984 | BVY,BVZ | M | +/- | Left/gauche | 11/05 ▸ | 1K0959455P | |
| 2.0 FSi 16V<br>8P-4-096 061, 8P-8-000 001 ▸ | 8P1/A/B/C, 8PA/A/B/C | E | 1984 | AXW,BLR,BLX,BLY,BMB | M | - | Left/gauche | 10/03 ▸ | 1K0959455P | |
| 2.0 FSi 16V<br>8P-8-000 001, 8P-4-096 061 ▸ | 8P1/A/B/C, 8PA/A/B/C | E | 1984 | AXW,BLR,BLX,BLY,BMB | M | - | Left/gauche | 10/03 ▸ 10/05 | 1K0959455EA | |
| 2.0 FSi 16V<br>8P-8-000 001, 8P-4-096 061 ▸ | 8P1/A/B/C, 8PA/A/B/C | E | 1984 | AXW,BLX,BLY,BMB | M | - | Left/gauche | 10/03 ▸ | 1K0959455BC | |
| 2.0 FSi 16V<br>8P-4-096 061, 8P-5-000 001 ▸ | 8P1/A/B/C, 8PA/A/B/C | E | 1984 | AXW,BLR,BLX,BLY,BMB | M | - | Right/Droite | 10/03 ▸ 10/05 | 1K0959455DG | |
| 2.0 TFSi 16V | 8P1/B/C, 8PA/B/C | E | 1984 | AXX,BWA | A | +/- | Left/gauche | 09/04 ▸ | 1K0959455N | |
| 2.0 TFSi 16V | 8P1/B/C, 8PA/B/C | E | 1984 | AXX,BWA | A | +/- | Left/gauche | 09/04 ▸ | 1K0959455DL | |
| 2.0 TFSi 16V | 8P1B, 8PAB | E | 1984 | AXX | A | +/- | Right/Droite | 09/04 ▸ 10/05 | 1K0959455DH | |
| 2.0 TFSi 16V | 8P1B, 8PAB | E | 1984 | AXX | A | +/- | Right/Droite | 09/04 ▸ | 1K0959455Q | |
| 2.0 FSi 16V | 8P1/A/B/C, 8PA/A/B/C | E | 1984 | BVY,BVZ | A | +/- | Left/gauche | 11/05 ▸ | 1K0959455P | |
| 2.0 FSi 16V | 8P1/A/B/C, 8PA/A/B/C | E | 1984 | BVY,BVZ | A | +/- | Right/Droite | 11/05 ▸ 06/08 | 1K0959455DG | |
| 2.0 FSi 16V | 8P1/A/B/C, 8PA/A/B/C | E | 1984 | BVY,BVZ | A | +/- | Left/gauche | 11/05 ▸ 06/08 | 1K0959455EA | |
| 2.0 FSi 16V | 8P1/A/B/C, 8PA/A/B/C | E | 1984 | BLR,BLX,BLY,BMB | A | + | Right/Droite | 03/04 ▸ 11/05 | 1K0959455DH | |
| 2.0 FSi 16V | 8P1/A/B/C, 8PA/A/B/C | E | 1984 | BLR,BLX,BLY,BMB | A | + | Left/gauche | 03/04 ▸ 11/05 | 1K0959455DL | |
| 2.0 FSi 16V | 8P1/A/B/C, 8PA/A/B/C | E | 1984 | BLR,BLX,BLY,BMB | A | + | Left/gauche | 03/04 ▸ 11/05 | 1K0959455N | |
| 2.0 FSi 16V<br>8P-4-096 061, 8P-8-000 001 ▸ | 8P1/A/B/C, 8PA/A/B/C | E | 1984 | AXW,BLX,BLY,BMB | A | - | Left/gauche | 10/03 ▸ | 1K0959455BC | |
| 2.0 FSi 16V<br>8P-4-096 061, 8P-5-000 001 ▸ | 8P1/A/B/C, 8PA/A/B/C | E | 1984 | AXW,BLX,BLY,BMB | A | - | Right/Droite | 10/03 ▸ | 1K0959455R | |
| 2.0 FSi 16V<br>8P-5-000 001, 8P-4-096 061 ▸ | 8P1/A/B/C, 8PA/A/B/C | E | 1984 | AXW,BLR,BLX,BLY,BMB | A | - | Right/Droite | 10/03 ▸ 11/05 | 1K0959455DG | |
| 2.0 FSi 16V<br>8P-4-096 061, 8P-8-000 001 ▸ | 8P1/A/B/C, 8PA/A/B/C | E | 1984 | AXW,BLR,BLX,BLY,BMB | A | - | Left/gauche | 10/03 ▸ 11/05 | 1K0959455EA | |
| 2.0 FSi 16V<br>8P-4-096 061, 8P-8-000 001 ▸ | 8P1/A/B/C, 8PA/A/B/C | E | 1984 | AXW,BLR,BLX,BLY,BMB | A | - | Left/gauche | 10/03 ▸ | 1K0959455P | |
| 2.0 FSi 16V<br>8P-4-096 061, 8P-5-000 001 ▸ 8P-4-200 000 | 8P1/A/B/C, 8PA/A/B/C | E | 1984 | AXW,BLX,BLY,BMB | M | - | Right/Droite | 10/03 ▸ | 1K0959455R | |
| 3.2 i V6 24V | 8P1B, 8PAB | E | 3189 | BMJ,BUB | M | +/- | Left/gauche | 09/04 ▸ 06/08 | 1K0959455DL | |
| 3.2 i V6 24V | 8P1B, 8PAB | E | 3189 | BMJ,BUB | M | +/- | Left/gauche | 09/04 ▸ | 1K0959455N | |
| 3.2 i V6 24V | 8P1B, 8PAB | E | 3189 | BMJ,BUB | M | +/- | | 09/04 ▸ 06/08 | 1K0959455DH | |
| 3.2 i V6 24V | 8P1B, 8PAB | E | 3189 | BMJ | M | +/- | Right/Droite | 09/04 ▸ | 1K0959455Q | |
| 3.2 i V6 24V | 8P1B, 8PAB | E | 3189 | BMJ,BUB | A | +/- | Left/gauche | 09/04 ▸ | 1K0959455N | |
| 3.2 i V6 24V | 8P1B, 8PAB | E | 3189 | BMJ,BUB | A | +/- | Left/gauche | 09/04 ▸ | 1K0959455DL | |
| 3.2 i V6 24V | 8P1B, 8PAB | E | 3189 | BMJ,BUB | A | +/- | Right/Droite | 09/04 ▸ | 1K0959455DH | |
| 3.2 i V6 24V | 8P1B, 8PAB | E | 3189 | BMJ | A | +/- | Right/Droite | 09/04 ▸ | 1K0959455Q | |
| 1.9 TDi | 8P1/A/B/C, 8PA/A/B/C | D | 1896 | BLS | M | +/- | Left/gauche | 10/05 ▸ | 1K0959455P | |
| 1.9 TDi | 8P1/A/B/C, 8PA/A/B/C | D | 1896 | BLS | M | +/- | Right/Droite | 10/05 ▸ 06/08 | 1K0959455DG | |
| 1.9 TDi | 8P1/A/B/C, 8PA/A/B/C | D | 1896 | BLS | M | +/- | Left/gauche | 10/05 ▸ 06/08 | 1K0959455EA | |
| 1.9 TDi | 8P1/A/B/C, 8PA/A/B/C | D | 1896 | BLS | M | + | Left/gauche | 10/05 ▸ 06/08 | 1K0959455DL | |
| 1.9 TDi | 8P1/A/B/C, 8PA/A/B/C | D | 1896 | BLS | M | + | Right/Droite | 10/05 ▸ 06/08 | 1K0959455DH | |
| 1.9 TDi | 8P1/A/B/C, 8PA/A/B/C | D | 1896 | BLS | M | + | Left/gauche | 10/05 ▸ | 1K0959455N | |
| 1.9 TDi | 8P1/A/B/C, 8PA/A/B/C | D | 1896 | BKC,BXE | M | - | Left/gauche | 06/03 ▸ 06/08 | 1K0959455EA | |
| 1.9 TDi<br>8P-5-000 001 ▸ | 8P1/A/B/C, 8PA/A/B/C | D | 1896 | BKC,BXE | M | - | | 06/03 ▸ | 1K0959455P | |
| 1.9 TDi<br>8P-5-000 001 ▸ | 8P1/A/B/C, 8PA/A/B/C | D | 1896 | BKC | M | - | | 06/04 ▸ | 1K0959455R | |
| 1.9 TDi<br>8P-5-000 001 ▸ | 8P1/A/B/C, 8PA/A/B/C | D | 1896 | BKC,BXE | M | - | | 06/04 ▸ 06/08 | 1K0959455DG | |
| 1.9 TDi | 8P1/A/B/C, 8PA/A/B/C | D | 1896 | BKC | M | - | | 06/04 ▸ | 1K0959455BC | |
| 1.9 TDi | 8P1/B, 8PA/B/C | D | 1896 | BLS | A | +/- | Right/Droite | 06/06 ▸ 06/08 | 1K0959455DG | |
| 1.9 TDi | 8P1/B, 8PA/B/C | D | 1896 | BLS | A | +/- | Left/gauche | 06/06 ▸ | 1K0959455P | |

Fan Motor + Blades Moteur + hélice Lüftermotor + Lüfterrad Motorino + Ventola Ventilatormotor Fan motoru + Kanatlar
Moto-ventilador + Aspas Мотор вентилятора + лопасти вентилятора Ventilátor motor és lapát Motor sahary + vrtule Ventilator motor + Lame Μοτέρ ανεμιστήρων + Πτερωτές



• **New** Nouveau **Nuevo** Novo **Nuovo** Nieuw **Neu** Nowość **Yeni** Новый Νέο **Novy**

## A3 (2003>2008) (.../...)

| | | | CC | | | AC | | | OE | Valeo |
|---|---|---|---|---|---|---|---|---|---|---|
| 1.9 TDi | 8P1/B, 8PA/B/C | D | 1896 | BLS | A | +/- | Left/gauche | 06/06 ▸ 06/08 | 1K0959455EA | |
| 1.9 TDi | 8P1/B, 8PA/B/C | D | 1896 | BLS | A | + | Left/gauche | 06/06 ▸ | 1K0959455N | |
| 1.9 TDi | 8P1/B, 8PA/B/C | D | 1896 | BLS | A | + | Right/Droite | 06/06 ▸ 06/08 | 1K0959455DH | |
| 1.9 TDi | 8P1/B, 8PA/B/C | D | 1896 | BLS | A | + | Left/gauche | 06/06 ▸ 06/08 | 1K0959455DL | |
| 1.9 TDi | 8PAB, 8P1/B/C | D | 1896 | BKC,BXE | A | - | Left/gauche | 03/06 ▸ 06/08 | 1K0959455EA | |
| 1.9 TDi | 8PAB, 8P1/B/C | D | 1896 | BKC,BXE | A | - | Left/gauche | 03/06 ▸ | 1K0959455P | |
| 1.9 TDi | 8PAB, 8P1/B/C | D | 1896 | BKC,BXE | A | - | Right/Droite | 03/06 ▸ 06/08 | 1K0959455DG | |
| 2.0 TDi | 8P1/A/B/C, 8PA/A/B/C | D | 1968 | BMM/F | M | +/- | Left/gauche | 01/05 ▸ 06/08 | 1K0959455EA | |
| 2.0 TDi | 8P1/A/B/C, 8PA/A/B/C | D | 1968 | BMM/F | M | +/- | Left/gauche | 01/05 ▸ | 1K0959455P | |
| 2.0 TDi | 8P1/A/B/C, 8PA/A/B/C | D | 1968 | BMM/F | M | +/- | Right/Droite | 06/05 ▸ 06/08 | 1K0959455DG | |
| 2.0 TDi,2.0 TDi 16V | 8P1/A/B/C, 8PA/A/B/C Z | D | 1968 | AZV,BKD,BMM/F,BMN,BUY | M | + | Left/gauche | 06/04 ▸ | 1K0959455N | |
| 2.0 TDi,2.0 TDi 16V | 8P1/A/B/C, 8PA/A/B/C Z | D | 1968 | AZV,BKD,BMM/F,BMN,BUY | M | + | | 06/04 ▸ 06/08 | 1K0959455DH | |
| 2.0 TDi,2.0 TDi 16V 8P-5-000 001 ▸ | 8P1/A/B/C, 8PA/A/B/C | D | 1968 | AZV,BKD,BMM/F | M | + | | 06/04 ▸ | 1K0959455Q | |
| 2.0 TDi,2.0 TDi 16V | 8P1/A/B/C, 8PA/A/B/C Z | D | 1968 | AZV,BKD,BMM/F,BMN,BUY | M | + | Left/gauche | 06/04 ▸ 06/08 | 1K0959455DL | |
| 2.0 TDi 16V | 8P1/A/B/C, 8PA/A/B/C Z | D | 1968 | AZV,BKD,BMN,BUY | M | - | Left/gauche | 05/03 ▸ 06/08 | 1K0959455EA | |
| 2.0 TDi,2.0 TDi 16V | 8P1/A/B/C, 8PA/A/B/C Z | D | 1968 | AZV,BKD,BMM/F,BMN,BUY | M | - | Left/gauche | 05/03 ▸ | 1K0959455P | |
| 2.0 TDi,2.0 TDi 16V 8P-5-000 001 ▸ | 8P1/A/B/C, 8PA/A/B/C | D | 1968 | AZV,BKD,BMM/F | M | - | | 06/04 ▸ | 1K0959455R | |
| 2.0 TDi,2.0 TDi 16V 8P-5-000 001 ▸ | 8P1/A/B/C, 8PA/A/B/C | D | 1968 | AZV,BKD,BMM/F | M | - | Left/gauche | 06/04 ▸ | 1K0959455BC | |
| 2.0 TDi,2.0 TDi 16V | 8P1/A/B/C, 8PA/A/B/C Z | D | 1968 | AZV,BKD,BMM/F,BMN,BUY | M | - | | 06/04 ▸ 06/08 | 1K0959455DG | |
| 2.0 TDi | 8P1/A/B/C, 8PA/A/B/C | D | 1968 | BMM/F | A | +/- | Right/Droite | 06/05 ▸ | 1K0959455DG | |
| 2.0 TDi | 8P1/A/B/C, 8PA/A/B/C | D | 1968 | BMM/F | A | +/- | Left/gauche | 06/05 ▸ | 1K0959455EA | |
| 2.0 TDi | 8P1/A/B/C, 8PA/A/B/C | D | 1968 | BMM/F | A | +/- | Left/gauche | 06/05 ▸ | 1K0959455P | |
| 2.0 TDi,2.0 TDi 16V | 8P1/A/B/C, 8PA/A/B/C | D | 1968 | AZV,BKD,BMM/F,BMN,BUY | A | + | Left/gauche | 06/04 ▸ | 1K0959455DL | |
| 2.0 TDi,2.0 TDi 16V | 8P1/A/B/C, 8PA/A/B/C | D | 1968 | AZV,BKD,BMM/F,BMN,BUY | A | + | Left/gauche | 06/04 ▸ | 1K0959455N | |
| 2.0 TDi 16V 8P-5-000 001 ▸ | 8P1/A/B/C, 8PA/A/B/C | D | 1968 | AZV,BKD | A | + | | 06/04 ▸ | 1K0959455Q | |
| 2.0 TDi,2.0 TDi 16V | 8P1/A/B/C, 8PA/A/B/C | D | 1968 | AZV,BKD,BMM/F,BMN,BUY | A | + | | 06/04 ▸ | 1K0959455DH | |
| 2.0 TDi 16V | 8P1/A/B/C, 8PA/A/B/C | D | 1968 | AZV,BKD,BMN,BUY | A | - | Left/gauche | 05/03 ▸ | 1K0959455EA | |
| 2.0 TDi 16V | 8P1/A/B/C, 8PA/A/B/C | D | 1968 | AZV,BKD,BMN,BUY | A | - | Left/gauche | 05/03 ▸ | 1K0959455P | |
| 2.0 TDi 16V | 8P1/A/B/C, 8PA/A/B/C | D | 1968 | AZV,BKD,BMN,BUY | A | - | Right/Droite | 09/03 ▸ | 1K0959455DG | |
| 2.0 TDi 16V 8P-5-000 001 ▸ | 8P1/A/B/C, 8PA/A/B/C | D | 1968 | AZV,BKD | A | - | Left/gauche | 06/04 ▸ | 1K0959455BC | |
| 2.0 TDi 16V | 8P1/A/B/C, 8PA/A/B/C | D | 1968 | AZV,BKD | A | - | Right/Droite | 06/04 ▸ | 1K0959455R | |

## A3 (2008>)

| | | | | | | | | | | |
|---|---|---|---|---|---|---|---|---|---|---|
| 1.4 TFSi 125 16V | 8P1/A/B/C, 8PA/A/B/C | E | 1390 | CAXC | M | +/- | Left/gauche | 07/08 ▸ | 1K0959455EA | |
| 1.4 TFSi 125 16V | 8P1/A/B/C, 8PA/A/B/C | E | 1390 | CAXC | M | + | Right/Droite | 07/08 ▸ | 1K0959455DH | |
| 1.4 TFSi 125 16V | 8P1/A/B/C, 8PA/A/B/C | E | 1390 | CAXC | M | | Right/Droite | 07/08 ▸ | 1K0959455DG | |
| 1.4 TFSi 125 16V | 8P1/A/B/C, 8PA/A/B/C | E | 1390 | CAXC | A | +/- | Left/gauche | 07/08 ▸ | 1K0959455EA | |
| 1.4 TFSi 125 16V | 8P1/A/B/C, 8PA/A/B/C | E | 1390 | CAXC | A | + | Right/Droite | 07/08 ▸ | 1K0959455DH | |
| 1.4 TFSi 125 16V | 8P1/A/B/C, 8PA/A/B/C | E | 1390 | CAXC | A | | Right/Droite | 07/08 ▸ | 1K0959455DG | |
| 1.6 i 102 | 8P1/A/B/C, 8PA/A/B/C | E | 1595 | BSE,BSF,CCSA | M | + | Left/gauche | 07/08 ▸ | 1K0959455EA | |
| 1.6 i 102 | 8P1/A/B/C, 8PA/A/B/C | E | 1595 | BSE | A | + | Left/gauche | 07/08 ▸ 12/10 | 1K0959455EA | |
| 1.8 TFSi 160 16V | 8P1/A/B/C, 8PA/A/B/C | E | 1798 | CDAA | M | +/- | Right/Droite | 07/08 ▸ | 1K0959455DH | |
| 1.8 TFSi 160 16V | 8P1/A/B/C, 8PA/A/B/C | E | 1798 | CDAA | A | +/- | Right/Droite | 07/08 ▸ | 1K0959455DH | |
| 2.0 TFSi 200 16V | 8P1/A/B/C, 8PA/A/B/C | E | 1984 | CCZA | M | +/- | Right/Droite | 07/08 ▸ | 1K0959455DH | |
| 2.0 TFSi 200 16V | 8P1/B/C, 8PA/B/C | E | 1984 | CCZA | A | +/- | Right/Droite | 07/08 ▸ | 1K0959455DH | |
| 3.2 i V6 24V | 8PAB | E | 3189 | BUB | A | +/- | Right/Droite | 07/08 ▸ 05/09 | 1K0959455DH | |
| 1.9 TDi,1.9 TDi 105 | 8P1/A/B/C/E, 8PA/A/B C/E | D | 1896 | BLS/F,BXE | M | +/- | Left/gauche | 07/08 ▸ | 1K0959455EA | |
| 1.9 TDi,1.9 TDi 105 | 8P1/A/B/C/E, 8PA/A/B C/E | D | 1896 | BLS/F,BXE | M | +/- | Right/Droite | 07/08 ▸ | 1K0959455DG | |
| 1.9 TDi 105 | 8P1/A/B/C, 8PA/A/B/C | D | 1896 | BLS/F | A | +/- | Right/Droite | 07/08 ▸ 05/10 | 1K0959455DG | |
| 1.9 TDi 105 | 8P1/A/B/C, 8PA/A/B/C | D | 1896 | BLS/F | A | +/- | Left/gauche | 07/08 ▸ 05/10 | 1K0959455EA | |
| 2.0 TDi 136 16V<br>2.0 TDi 140 16V<br>2.0 TDi 170 16V | 8P1/A/B/C, 8PA/A/B/C | D | 1968 | CBAA/F,CBAB/F,CBBB/F | M | +/- | Left/gauche | 07/08 ▸ 05/10 | 1K0959455EA | |
| 2.0 TDi 136 16V<br>2.0 TDi 140 16V<br>2.0 TDi 170 16V | 8P1/A/B/C, 8PA/A/B/C | D | 1968 | CBAA/F,CBAB/F,CBBB/F | M | +/- | Right/Droite | 07/08 ▸ 05/10 | 1K0959455DH | |

# AUDI (.../...)

## A3 (2008>) (.../...)

| | | | CC | | AC | | | | OE | Valeo | |
|---|---|---|---|---|---|---|---|---|---|---|---|
| 2.0 TDi 136 16V<br>2.0 TDi 140 16V<br>2.0 TDi 170 16V | 8P1/A/B/C, 8PA/A/B/C | D | 1968 | CBAA/F,CBAB/F,CBBB/F | M | +/- | Right/Droite | 07/08 ▸ 05/10 | 1K0959455DG | | |
| 2.0 TDi 136 16V<br>2.0 TDi 140 16V<br>2.0 TDi 170 16V | 8P1/A/B/C, 8PA/A/B/C | D | 1968 | CBAA/F,CBAB/F,CBBB/F | A | +/- | Left/gauche | 07/08 ▸ 05/10 | 1K0959455EA | | |
| 2.0 TDi 136 16V<br>2.0 TDi 140 16V<br>2.0 TDi 170 16V | 8P1/A/B/C, 8PA/A/B/C | D | 1968 | CBAA/F,CBAB/F,CBBB/F | A | +/- | Right/Droite | 07/08 ▸ 05/10 | 1K0959455DH | | |
| 2.0 TDi 136 16V<br>2.0 TDi 140 16V<br>2.0 TDi 170 16V | 8P1/A/B/C, 8PA/A/B/C | D | 1968 | CBAA/F,CBAB/F,CBBB/F | A | +/- | Right/Droite | 07/08 ▸ 05/10 | 1K0959455DG | | |

## A3 CABRIOLET (2008>)

| | | | | | | | | | | | |
|---|---|---|---|---|---|---|---|---|---|---|---|
| 1.8 TFSi 160 16V | 8P7/A/B | E | 1798 | BZB | M | +/- | Right/Droite | 04/08 ▸ 01/09 | 1K0959455DH | | |
| 1.8 TFSi 160 16V | 8P7/A/B | E | 1798 | BZB | M | | Left/gauche | 04/08 ▸ 01/09 | 1K0959455DL | | |
| 1.8 TFSi 160 16V | 8P7/A/B | E | 1798 | BZB | A | +/- | Right/Droite | 04/08 ▸ 01/09 | 1K0959455DH | | |
| 1.8 TFSi 160 16V | 8P7/A/B | E | 1798 | BZB | A | | Left/gauche | 04/08 ▸ 01/09 | 1K0959455DL | | |
| 1.9 TDi 105 | 8P7/A/B | D | 1896 | BLS/F | M | +/- | Left/gauche | 04/08 ▸ 10/09 | 1K0959455EA | | |
| 1.9 TDi 105 | 8P7/A/B | D | 1896 | BLS/F | M | +/- | Left/gauche | 04/08 ▸ 10/09 | 1K0959455DL | | |
| 1.9 TDi 105 | 8P7/A/B | D | 1896 | BLS/F | M | +/- | Right/Droite | 04/08 ▸ 10/09 | 1K0959455DG | | |
| 1.9 TDi 105 | 8P7/A/B | D | 1896 | BLS/F | M | + | Right/Droite | 04/08 ▸ 10/09 | 1K0959455DH | | |

## A4 (94>98)

| | | | | | | | | | | | |
|---|---|---|---|---|---|---|---|---|---|---|---|
| 1.6 i | 8D2/0/H, 8D5/0/H | E | 1595 | ADP,AHL,ANA,ARM | M | + | Right/Droite | 11/94 ▸ 12/98 | 8D0959455C | 698155 | |
| 1.6 i | 8D2/0/H, 8D5/0/H | E | 1595 | ADP,AHL,ANA | A | + | Right/Droite | 11/94 ▸ 12/98 | 8D0959455C | 698155 | |
| 1.8 i Turbo 20V | 8D50 | E | 1781 | APU | M | +/- | Right/Droite | 08/98 ▸ 12/98 | 8D0959455C | 698155 | |
| 1.8 i 20V,1.8 i Turbo 20V | 8D2/0/H/S/T, 8D5/0/H/S | E | 1781 | ADR,AEB,AFY,APU,ARG | M | + | Right/Droite | 11/94 ▸ 12/98 | 8D0959455C | 698155 | |
| 1.8 i Turbo 20V | 8D20, 8D50 | E | 1781 | ARK | M | | Right/Droite | 08/98 ▸ 12/98 | 8D0959455C | 698155 | |
| 1.8 i Turbo 20V | 8D20, 8D50 | E | 1781 | APU | A | +/- | Right/Droite | 08/98 ▸ 12/98 | 8D0959455C | 698155 | |
| 1.8 i 20V,1.8 i Turbo 20V | 8D2/0/H/S, 8D5/0/H/S | E | 1781 | ADR,AEB,AFY,ARG | A | + | Right/Droite | 11/94 ▸ 12/98 | 8D0959455C | 698155 | |
| 1.8 i Turbo 20V | 8D20 | E | 1781 | ARK | A | | Right/Droite | 08/98 ▸ 12/98 | 8D0959455C | 698155 | |
| 2.4 i V6,2.4 i V6 30V | 8D2/0/H/S, 8D5/0/H | E | 2393 | AFM,AGA,AJG,ALF,AML,APS,ARJ | M | +/- | Right/Droite | 07/95 ▸ 12/98 | 8D0959455C | 698155 | |
| 2.4 i V6,2.4 i V6 30V | 8D20, 8D50 | E | 2393 | ALF,APZ | M | + | Right/Droite | 08/97 ▸ 12/98 | 8D0959455C | 698155 | |
| 2.4 i V6,2.4 i V6 30V | 8D50, 8D2/0/H/S | E | 2393 | AGA,AJG,ALF,AML,APS,ARJ | A | +/- | Right/Droite | 08/97 ▸ 12/98 | 8D0959455C | 698155 | |
| 2.4 i V6 30V | 8D20 | E | 2393 | APZ | A | + | Right/Droite | 08/98 ▸ 12/98 | 8D0959455C | 698155 | |
| 2.6 i V6 | 8D20, 8D50 | E | 2598 | ACZ | M | +/- | Right/Droite | 04/95 ▸ 12/98 | 8D0959455C | 698155 | |
| 2.6 i V6 | 8D2/0/H/S, 8D5/0/H/S | E | 2598 | ABC,ACZ | A | +/- | Right/Droite | 11/94 ▸ 07/98 | 8D0959455C | 698155 | |
| 2.8 i V6,2.8 i V6 30V | 8D50, 8D2/0/H/S | E | 2771 | AAH,ACK,ALG,APR,AQD | M | +/- | Right/Droite | 11/94 ▸ 12/98 | 8D0959455C | 698155 | |
| 2.8 i V6 30V | 8D2/0/H, 8D5/0/H | E | 2771 | ACK,AMX | M | + | Right/Droite | 04/96 ▸ 12/98 | 8D0959455C | 698155 | |
| 2.8 i V6,2.8 i V6 30V | 8D50, 8D2/0/H/S | E | 2771 | AAH,ACK,ALG,APR,AQD | A | +/- | Right/Droite | 02/95 ▸ 12/98 | 8D0959455C | 698155 | |
| 2.8 i V6 30V | 8D2/0/H, 8D5/0/H | E | 2771 | ACK,AMX | A | + | Right/Droite | 03/96 ▸ 12/98 | 8D0959455C | 698155 | |
| 1.9 TDi | 8D2/0/H | D | 1896 | AFF,AHH | M | +/- | Right/Droite | 03/96 ▸ 12/98 | 8D0959455C | 698155 | |
| 1.9 TDi | 8D2/0/H, 8D5/0/H | D | 1896 | 1Z,AFN,AHH,AHU | M | + | Right/Droite | 11/94 ▸ 12/98 | 8D0959455C | 698155 | |
| 1.9 TDi | 8D20 | D | 1896 | AJM | M | | Right/Droite | 08/98 ▸ 12/98 | 8D0959455C | 698155 | |
| 1.9 TDi | 8D2/0/H, 8D5/0/H | D | 1896 | AFN,AJM | A | +/- | Right/Droite | 02/96 ▸ 12/98 | 8D0959455C | 698155 | |
| 1.9 TDi | 8D2/0/H, 8D5/0/H | D | 1896 | 1Z,AHU | A | + | Right/Droite | 01/95 ▸ 12/98 | 8D0959455C | 698155 | |
| 2.5 TDi V6 24V | 8D20, 8D50 | D | 2496 | AFB,AKN | M | +/- | Right/Droite | 11/97 ▸ 12/98 | 8D0959455C | 698155 | |
| 2.5 TDi V6 24V | 8D20, 8D50 | D | 2496 | AFB,AKN | A | +/- | Right/Droite | 11/97 ▸ 12/98 | 8D0959455C | 698155 | |

## A4 (99>2001)

| | | | | | | | | | | | |
|---|---|---|---|---|---|---|---|---|---|---|---|
| 1.6 i | 8D20, 8D50 | E | 1595 | ALZ | M | +/- | | 06/00 ▸ 09/01 | 8D0959455C | 698155 | |
| 1.6 i | 8D20, 8D50 | E | 1595 | AHL,ANA,ARM | M | + | | 01/99 ▸ 09/01 | 8D0959455P | | |
| 1.6 i | 8D50 | E | 1595 | ARM | M | + | | 02/99 ▸ 07/99 | 8D0959455C | 698155 | |
| 1.6 i | 8D20, 8D50 | E | 1595 | AHL,ANA,ARM | M | | | 01/99 ▸ 11/00 | 8D0959455C | 698155 | |
| 1.6 i | 8D20, 8D50 | E | 1595 | AHL,ANA,ARM | A | + | | 01/99 ▸ 11/00 | 8D0959455P | | |
| 1.6 i | 8D20, 8D50 | E | 1595 | AHL,ANA,ARM | A | | | 01/99 ▸ 11/00 | 8D0959455C | 698155 | |
| 1.8 i 20V,1.8 i Turbo 20V | 8D20, 8D50 | E | 1781 | ADR,AFY,AJL,ANB,APT,APU,ARG ARK | M | +/- | | 02/99 ▸ 11/00 | 8D0959455C | 698155 | |
| 1.8 i 20V,1.8 i Turbo 20V | 8D2/0/S/T, 8D5/0/S | E | 1781 | APT,APU,ARG,ARK,AWT | M | + | | 01/99 ▸ 09/01 | 8D0959455P | | |
| 1.8 i 20V,1.8 i Turbo 20V | 8D2/0/S/T, 8D5/0/S | E | 1781 | ADR,AFY,AJL,ANB,APT,APU,ARG | M | | | 01/99 ▸ 11/00 | 8D0959455C | 698155 | |
| 1.8 i 20V | 8D20, 8D50 | E | 1781 | ARG | M | | | 02/99 ▸ 09/01 | 8D0959455P | | |
| 1.8 i 20V,1.8 i Turbo 20V | 8D2/0/S, 8D5/0/S | E | 1781 | APT,APU,ARG | A | + | | 01/99 ▸ 09/01 | 8D0959455P | | |
| 1.8 i 20V,1.8 i Turbo 20V | 8D2/0/S, 8D5/0/S | E | 1781 | AFY,ANB,APT,APU,ARG | A | | | 01/99 ▸ 11/00 | 8D0959455C | 698155 | |
| 1.8 i 20V | 8D50 | E | 1781 | ARG | A | | | 02/99 ▸ 09/01 | 8D0959455P | | |
| 2.4 i V6 30V | 8D20, 8D50 | E | 2393 | AML,APS,APZ,ARJ | M | +/- | | 02/99 ▸ 11/00 | 8D0959455C | 698155 | |
| 2.4 i V6 30V | 8D20 | E | 2393 | AML | M | +/- | | 07/99 ▸ 11/00 | 8D0959455J | | |
| 2.4 i V6 30V | 8D2/0/S, 8D5/0/S | E | 2393 | AML,APS,APZ,ARJ | M | + | | 02/99 ▸ 09/01 | 8D0959455P | | |
| 2.4 i V6 30V | 8D2/0/S, 8D5/0/S | E | 2393 | APS,APZ,ARJ | M | | | 02/99 ▸ 11/00 | 8D0959455C | 698155 | |

Fan Motor + Blades Moteur + hélice Lüftermotor + Lüfterrad Motorino + Ventola Ventilatormotor Fan motoru + Kanatlar
Moto-ventilador + Aspas Motor вентилятора + лопасти вентилятора Ventilátor motor és lapát Motor sahary + vrtule Ventilator motor + Lame Μοτέρ ανεμιστήρων + Πτερωτές



• **New** Nouveau **Nuevo** Novo **Nuovo** Nieuw **Neu** Nowość **Yeni** Новый Νέο **Novy**

# AUDI (.../...)

## A4 (99>2001) (.../...)

| | | | CC | | | AC | | | OE | Valeo | |
|---|---|---|---|---|---|---|---|---|---|---|---|
| 2.4 i V6 30V | 8D20, 8D50 | E | 2393 | APS | A | +/- | | 02/99 ▸ 11/00 | 8D0959455C | 698155 | |
| 2.4 i V6 30V | 8D2/0/S, 8D5/0/S | E | 2393 | APS,ARJ | A | + | | 02/99 ▸ 09/01 | 8D0959455P | | |
| 2.4 i V6 30V | 8D2/0/S, 8D5/0/S | E | 2393 | APS,APZ,ARJ | A | | | 02/99 ▸ 11/00 | 8D0959455C | 698155 | |
| 2.8 i V6 30V | 8D20, 8D50 | E | 2771 | AMX,APR,AQD,ATX | M | +/- | | 02/99 ▸ 11/00 | 8D0959455C | 698155 | |
| 2.8 i V6 30V | 8D20 | E | 2771 | AMX,APR,AQD,ATX | M | +/- | | 02/99 ▸ 10/00 | 8D0959455J | | |
| 2.8 i V6 30V | 8D20, 8D50 | E | 2771 | AQD,ATX | M | + | | 02/99 ▸ 09/01 | 8D0959455P | | |
| 2.8 i V6 30V | 8D50, 8D2/0/S | E | 2771 | APR,AQD,ATX | M | | | 01/99 ▸ 11/00 | 8D0959455C | 698155 | |
| 2.8 i V6 30V | 8D20, 8D50 | E | 2771 | AMX,APR,AQD,ATX | A | +/- | | 02/99 ▸ 11/00 | 8D0959455C | 698155 | |
| 2.8 i V6 30V | 8D20 | E | 2771 | AMX,APR,AQD,ATX | A | +/- | | 02/99 ▸ 11/00 | 8D0959455J | | |
| 2.8 i V6 30V | 8D20, 8D50 | E | 2771 | AQD,ATX | A | + | | 02/99 ▸ 09/01 | 8D0959455P | | |
| 2.8 i V6 30V | 8D50, 8D2/0/S | E | 2771 | APR,AQD,ATX | A | | | 01/99 ▸ 11/00 | 8D0959455C | 698155 | |
| 2.8 i V6 30V | 8D20 | E | 2771 | AQD | A | | | 02/99 ▸ 07/99 | 8D0959455P | | |
| 1.9 TDi | 8D20, 8D50 | D | 1896 | AFN,AVG | M | +/- | | 02/99 ▸ 01/00 | 8D0959455C | 698155 | |
| 1.9 TDi | 8D20 | D | 1896 | AHH | M | + | | 01/99 ▸ 11/00 | 8D0959455P | | |
| 1.9 TDi | 8D20 | D | 1896 | AJM | M | - | | 01/00 ▸ 10/00 | 8D0959455C | 698155 | |
| 1.9 TDi | 8D20, 8D50 | D | 1896 | AFN,AHH,AHU,AJM | M | | | 01/99 ▸ 11/00 | 8D0959455C | 698155 | |
| 1.9 TDi | 8D20, 8D50 | D | 1896 | AJM | A | - | | 01/00 ▸ 09/01 | 8D0959455C | 698155 | |
| 1.9 TDi | 8D20, 8D50 | D | 1896 | AFN,AHU | A | | | 01/99 ▸ 11/00 | 8D0959455C | 698155 | |
| 2.5 TDi V6 24V | 8D20, 8D50 | D | 2496 | AFB,AKN | M | +/- | | 02/99 ▸ 11/00 | 8D0959455C | 698155 | |
| 2.5 TDi V6 24V | 8D20, 8D50 | D | 2496 | AFB,AKN | M | | | 01/99 ▸ 11/00 | 8D0959455C | 698155 | |
| 2.5 TDi V6 24V | 8D20, 8D50 | D | 2496 | AFB,AKN | A | +/- | | 02/99 ▸ 11/00 | 8D0959455C | 698155 | |
| 2.5 TDi V6 24V | 8D20, 8D50 | D | 2496 | AFB,AKN | A | | | 01/99 ▸ 11/00 | 8D0959455C | 698155 | |

## A4 (2000>2004)

| | | | | | | | | | | | |
|---|---|---|---|---|---|---|---|---|---|---|---|
| 1.6 i | 8E20, 8E50 | E | 1595 | ALZ | M | +/- | Right/Droite | 12/00 ▸ 12/04 | 8E0959455N | 698611 | |
| 1.6 i | 8E20, 8E50 | E | 1595 | ALZ | M | +/- | | 12/00 ▸ 12/04 | 8E0959455K | 698610 | |
| 1.6 i | 8E20, 8E50 | E | 1595 | ALZ | M | +/- | Right/Droite | 12/00 ▸ | 8E0959455B | 698611 | |
| 1.6 i | 8E20, 8E50 | E | 1595 | ALZ | M | +/- | | 12/00 ▸ | 8E0959455 | 698610 | |
| 1.8 i Turbo 20V | 8E50, 8E2/0/5 | E | 1781 | AMB,AVJ,BEX,BFB | M | +/- | Right/Droite | 12/00 ▸ 12/04 | 8E0959455N | 698611 | |
| 1.8 i Turbo 20V | 8E50, 8E2/0/5 | E | 1781 | AMB,AVJ,BEX,BFB | M | +/- | | 12/00 ▸ | 8E0959455 | 698610 | |
| 1.8 i Turbo 20V | 8E50, 8E2/0/5 | E | 1781 | AMB,AVJ,BEX,BFB | M | +/- | Right/Droite | 12/00 ▸ | 8E0959455B | 698611 | |
| 1.8 i Turbo 20V | 8E50, 8E2/0/5 | E | 1781 | AMB,AVJ,BEX,BFB | M | +/- | | 12/00 ▸ 12/04 | 8E0959455K | 698610 | |
| 1.8 i Turbo 20V | 8E25 | E | 1781 | AMB | M | + | | 09/01 ▸ 06/02 | 8E0959455C | 698612 | |
| 1.8 i Turbo 20V | 8E25 | E | 1781 | AMB | M | + | | 09/01 ▸ 06/02 | 8E0959455M | 698612 | |
| 1.8 i Turbo 20V | 8E2/0/5, 8E5/0/5 | E | 1781 | AMB,AVJ,BEX,BFB | A | +/- | | 04/01 ▸ | 8E0959455 | 698610 | |
| 1.8 i Turbo 20V | 8E2/0/5, 8E5/0/5 | E | 1781 | AMB,AVJ,BEX,BFB | A | +/- | Right/Droite | 04/01 ▸ | 8E0959455B | 698611 | |
| 1.8 i Turbo 20V | 8E2/0/5, 8E5/0/5 | E | 1781 | AMB,AVJ,BEX,BFB | A | +/- | | 04/01 ▸ 12/04 | 8E0959455K | 698610 | |
| 1.8 i Turbo 20V | 8E2/0/5, 8E5/0/5 | E | 1781 | AMB,AVJ,BEX,BFB | A | +/- | Right/Droite | 04/01 ▸ 12/04 | 8E0959455N | 698611 | |
| 2.0 FSI,2.0 i 20V | 8E20, 8E50 | E | 1984 | ALT,AWA | M | +/- | Right/Droite | 12/00 ▸ 12/04 | 8E0959455N | 698611 | |
| 2.0 FSI,2.0 i 20V | 8E20, 8E50 | E | 1984 | ALT,AWA | M | +/- | | 12/00 ▸ | 8E0959455 | 698610 | |
| 2.0 FSI,2.0 i 20V | 8E20, 8E50 | E | 1984 | ALT,AWA | M | +/- | Right/Droite | 12/00 ▸ | 8E0959455B | 698611 | |
| 2.0 FSI,2.0 i 20V | 8E20, 8E50 | E | 1984 | ALT,AWA | M | +/- | | 12/00 ▸ 12/04 | 8E0959455K | 698610 | |
| 2.0 FSI,2.0 i 20V | 8E20, 8E50 | E | 1984 | ALT,AWA | A | +/- | Right/Droite | 12/00 ▸ 12/04 | 8E0959455N | 698611 | |
| 2.0 FSI,2.0 i 20V | 8E20, 8E50 | E | 1984 | ALT,AWA | A | +/- | Right/Droite | 12/00 ▸ | 8E0959455B | 698611 | |
| 2.0 FSI | 8E50 | E | 1984 | AWA | A | +/- | | 07/02 ▸ | 8E0959455 | 698610 | |
| 2.0 FSI | 8E50 | E | 1984 | AWA | A | +/- | | 07/02 ▸ 12/04 | 8E0959455K | 698610 | |
| 2.4 i V6 30V | 8E20, 8E50 | E | 2393 | AMM,BDV | M | +/- | | 09/01 ▸ | 8E0959455A | 698609 | |
| 2.4 i V6 30V | 8E20, 8E50 | E | 2393 | AMM,BDV | M | +/- | Right/Droite | 09/01 ▸ | 8E0959455B | 698611 | |
| 2.4 i V6 30V | 8E20, 8E50 | E | 2393 | AMM,BDV | M | +/- | Right/Droite | 09/01 ▸ 12/04 | 8E0959455N | 698611 | |
| 2.4 i V6 30V | 8E20, 8E50 | E | 2393 | AMM,BDV | A | +/- | Right/Droite | 09/01 ▸ 12/04 | 8E0959455N | 698611 | |
| 2.4 i V6 30V | 8E20, 8E50 | E | 2393 | AMM,BDV | A | +/- | Right/Droite | 09/01 ▸ | 8E0959455B | 698611 | |
| 2.4 i V6 30V | 8E20, 8E50 | E | 2393 | AMM,BDV | A | | | 09/01 ▸ | 8E0959455A | 698609 | |
| 3.0 i 30V,3.0 i V6 30V | 8E2/0/5, 8E5/0/5 | E | 2976 | ASN,BBJ | M | +/- | Right/Droite | 12/00 ▸ | 8E0959455B | 698611 | |
| 3.0 i 30V,3.0 i V6 30V | 8E2/0/5, 8E5/0/5 | E | 2976 | ASN,BBJ | M | +/- | Right/Droite | 12/00 ▸ 12/04 | 8E0959455N | 698611 | |
| 3.0 i 30V,3.0 i V6 30V | 8E2/0/5, 8E5/0/5 | E | 2976 | ASN,BBJ | M | +/- | | 12/00 ▸ | 8E0959455A | 698609 | |
| 3.0 i 30V,3.0 i V6 30V | 8E2/0/5, 8E5/0/5 | E | 2976 | ASN,AVK,BBJ | A | +/- | Right/Droite | 12/00 ▸ | 8E0959455B | 698611 | |
| 3.0 i 30V,3.0 i V6 30V | 8E2/0/5, 8E5/0/5 | E | 2976 | ASN,AVK,BBJ | A | +/- | Right/Droite | 12/00 ▸ 12/04 | 8E0959455N | 698611 | |
| 3.0 i 30V,3.0 i V6 30V | 8E2/0/5, 8E5/0/5 | E | 2976 | ASN,AVK,BBJ | A | + | | 12/00 ▸ | 8E0959455A | 698609 | |
| 3.0 i V6 30V | 8E2/0, 8E5/0/5 | E | 2976 | ASN,AVK,BBJ | A | | | 12/00 ▸ | 8E0959455A | 698609 | |
| 1.9 TDi | 8E20, 8E50 | D | 1896 | AVB,AVF | M | +/- | Right/Droite | 04/01 ▸ 12/04 | 8E0959455N | 698611 | |
| 1.9 TDi | 8E20, 8E50 | D | 1896 | AVB,AVF | M | +/- | Right/Droite | 04/01 ▸ | 8E0959455B | 698611 | |
| 1.9 TDi<br>8E-4-000 001 ▸ | 8E20, 8E50 | D | 1896 | AVB | M | +/- | | 06/03 ▸ | 8E0959455 | 698610 | |
| 1.9 TDi<br>8E-4-000 001 ▸ | 8E20, 8E50 | D | 1896 | AVB | M | +/- | | 06/03 ▸ 05/04 | 8E0959455K | 698610 | |
| 1.9 TDi | 8E20, 8E50 | D | 1896 | AWX | M | + | | 12/00 ▸ | 8E0959455C | 698612 | |
| 1.9 TDi | 8E20, 8E50 | D | 1896 | AWX | M | + | | 12/00 ▸ 06/03 | 8E0959455M | 698612 | |
| 1.9 TDi<br>8E-4-000 001 ▸ | 8E20, 8E50 | D | 1896 | AVF | M | | | 04/01 ▸ 12/04 | 8E0959455K | 698610 | |

# AUDI (.../...)

## A4 (2000>2004) (.../...)

| | | | CC | | | AC | | | OE | Valeo |
|---|---|---|---|---|---|---|---|---|---|---|
| 1.9 TDi<br>8E-4-000 001 ▸ | 8E20, 8E50 | D | 1896 | AVF | M | | | 06/03 ▸ | 8E0959455 | **698610** |
| 1.9 TDi | 8E20, 8E50 | D | 1896 | AVF | A | +/- | Right/Droite | 11/02 ▸ | 8E0959455B | **698611** |
| 1.9 TDi | 8E20, 8E50 | D | 1896 | AVF | A | +/- | Right/Droite | 11/02 ▸ 12/04 | 8E0959455N | **698611** |
| 1.9 TDi<br>8E-4-000 001 ▸ | 8E20, 8E50 | D | 1896 | AVF | A | | | 06/03 ▸ | 8E0959455 | **698610** |
| 1.9 TDi<br>8E-4-000 001 ▸ | 8E20, 8E50 | D | 1896 | AVF | A | | | 06/03 ▸ 12/04 | 8E0959455K | **698610** |
| 1.9 TDi<br>▸ 8E-3-500 000 | 8E20 | D | 1896 | AVF | M | | | 04/01 ▸ 06/03 | 8E0959455C | **698612** |
| 1.9 TDi<br>▸ 8E-3-500 000 | 8E20 | D | 1896 | AVF | M | | | 04/01 ▸ 06/03 | 8E0959455M | **698612** |
| 1.9 TDi<br>▸ 8E-3-500000 | 8E20, 8E50 | D | 1896 | AVB,AVF | M | +/- | | 04/01 ▸ 05/03 | 8E0959455M | **698612** |
| 1.9 TDi<br>▸ 8E-3-500000 | 8E20, 8E50 | D | 1896 | AVB,AVF | M | +/- | Left/gauche | 04/01 ▸ 05/03 | 8E0959455C | **698612** |
| 1.9 TDi<br>▸ 8E-3-500000 | 8E20, 8E50 | D | 1896 | AVF | A | +/- | | 11/02 ▸ 05/03 | 8E0959455C | **698612** |
| 1.9 TDi<br>▸ 8E-3-500000 | 8E20, 8E50 | D | 1896 | AVF | A | +/- | Left/gauche | 11/02 ▸ 05/03 | 8E0959455M | **698612** |
| 2.5 TDi V6 24V | 8E20, 8E50 | D | 2496 | BDG | M | +/- | | 06/03 ▸ | 8E0959455C | **698612** |
| 2.5 TDi V6 24V | 8E20, 8E50 | D | 2496 | BDG | M | +/- | | 06/03 ▸ 12/04 | 8E0959455M | **698612** |
| 2.5 TDi 24V,2.5 TDi V6<br>2.5 TDi V6 24V | 8E20, 8E50 | D | 2496 | AKE,AYM,BAU,BDH,BFC | M | + | | 12/00 ▸ 12/04 | 8E0959455M | **698612** |
| 2.5 TDi 24V,2.5 TDi V6<br>2.5 TDi V6 24V | 8E20, 8E50 | D | 2496 | AKE,AYM,BAU,BDH,BFC | M | + | | 12/00 ▸ | 8E0959455C | **698612** |
| 2.5 TDi V6 24V | 8E20, 8E50 | D | 2496 | BAU,BDG | A | +/- | | 06/03 ▸ 12/04 | 8E0959455M | **698612** |
| 2.5 TDi V6 24V | 8E20, 8E50 | D | 2496 | BAU,BDG | A | +/- | | 06/03 ▸ | 8E0959455C | **698612** |
| 2.5 TDi V6,2.5 TDi V6 24V | 8E20, 8E50 | D | 2496 | AKE,AYM,BFC | A | + | | 04/01 ▸ | 8E0959455C | **698612** |
| 2.5 TDi V6,2.5 TDi V6 24V | 8E20, 8E50 | D | 2496 | AKE,AYM,BFC | A | + | Left/gauche | 04/01 ▸ 05/03 | 8E0959455M | **698612** |

## A4 (2004>2008)

| | | | CC | | | AC | | | OE | Valeo |
|---|---|---|---|---|---|---|---|---|---|---|
| 1.6 i | 8EC0, 8ED0 | E | 1595 | ALZ | M | + | Right/Droite | 11/04 ▸ 06/08 | 8E0959455N | **698611** |
| 1.6 i | 8EC0, 8ED0 | E | 1595 | ALZ | M | + | Left/gauche | 11/04 ▸ 06/08 | 8E0959455K | **698610** |
| 1.8 i Turbo 20V | 8EC0, 8ED0 | E | 1781 | BFB | M | + | Right/Droite | 11/04 ▸ 06/08 | 8E0959455N | **698611** |
| 1.8 i Turbo 20V | 8EC0, 8ED0 | E | 1781 | BFB | M | + | Left/gauche | 11/04 ▸ 06/08 | 8E0959455K | **698610** |
| 1.8 i Turbo 20V | 8EC0, 8ED0 | E | 1781 | BFB | A | + | Left/gauche | 11/04 ▸ 06/08 | 8E0959455K | **698610** |
| 1.8 i Turbo 20V | 8EC0, 8ED0 | E | 1781 | BFB | A | + | Right/Droite | 11/04 ▸ 06/08 | 8E0959455N | **698611** |
| 2.0 TFSi 16V,2.0 i 20V | 8EC0, 8ED0 | E | 1984 | ALT,BGB,BWE | M | + | Left/gauche | 11/04 ▸ 06/08 | 8E0959455K | **698610** |
| 2.0 TFSi 16V,2.0 i 20V | 8EC0, 8ED0 | E | 1984 | ALT,BGB,BWE | M | + | Right/Droite | 11/04 ▸ 06/08 | 8E0959455N | **698611** |
| 2.0 TFSi 16V,2.0 i 20V | 8EC0, 8ED0 | E | 1984 | ALT,BGB,BWE | A | + | Left/gauche | 11/04 ▸ 06/08 | 8E0959455K | **698610** |
| 2.0 TFSi 16V,2.0 i 20V | 8EC0, 8ED0 | E | 1984 | ALT,BGB,BWE | A | + | Right/Droite | 11/04 ▸ 06/08 | 8E0959455N | **698611** |
| 2.0 TFSi 16V | 8EC0 | E | 1996 | BUL | M | + | Left/gauche | 11/04 ▸ 06/08 | 8E0959455K | **698610** |
| 2.0 TFSi 16V | 8EC0 | E | 1996 | BUL | M | + | Right/Droite | 11/04 ▸ 06/08 | 8E0959455N | **698611** |
| 2.0 TFSi 16V | 8EC0 | E | 1996 | BUL | A | + | Right/Droite | 06/05 ▸ 06/08 | 8E0959455N | **698611** |
| 2.0 TFSi 16V | 8EC0 | E | 1996 | BUL | A | + | Left/gauche | 06/05 ▸ 06/08 | 8E0959455K | **698610** |
| 3.0 i 30V | 8EC0, 8ED0 | E | 2976 | BBJ | M | + | Left/gauche | 11/04 ▸ | 8E0959455A | **698609** |
| 3.0 i 30V | 8EC0, 8ED0 | E | 2976 | BBJ | M | + | Right/Droite | 11/04 ▸ 05/06 | 8E0959455N | **698611** |
| 3.0 i 30V | 8EC0, 8ED0 | E | 2976 | BBJ | A | + | Right/Droite | 11/04 ▸ 05/06 | 8E0959455N | **698611** |
| 3.0 i 30V | 8EC0, 8ED0 | E | 2976 | BBJ | A | + | Left/gauche | 11/04 ▸ | 8E0959455A | **698609** |
| 3.2 FSi V6 24V | 8EC0, 8ED0 | E | 3123 | AUK | M | + | Right/Droite | 01/05 ▸ 06/08 | 8E0959455N | **698611** |
| 3.2 FSi V6 24V | 8EC0, 8ED0 | E | 3123 | AUK | M | + | Left/gauche | 01/05 ▸ | 8E0959455A | **698609** |
| 3.2 FSi V6 24V | 8EC0, 8ED0 | E | 3123 | AUK | A | + | Left/gauche | 01/05 ▸ | 8E0959455A | **698609** |
| 3.2 FSi V6 24V | 8EC0, 8ED0 | E | 3123 | AUK | A | + | Right/Droite | 01/05 ▸ 06/08 | 8E0959455N | **698611** |
| 1.9 TDi | 8EC0, 8ED0 | D | 1896 | BKE,BRB | M | + | Right/Droite | 11/04 ▸ 06/08 | 8E0959455N | **698611** |
| 1.9 TDi | 8EC0, 8ED0 | D | 1896 | BKE,BRB | M | + | Left/gauche | 11/04 ▸ 06/08 | 8E0959455K | **698610** |
| 2.0 TDi,2.0 TDi 16V | 8EC0, 8ED0 | D | 1968 | BLB,BNA,BPW,BRE,BRF,BVF | M | + | Right/Droite | 11/04 ▸ 06/08 | 8E0959455N | **698611** |
| 2.0 TDi,2.0 TDi 16V | 8EC0, 8ED0 | D | 1968 | BLB,BNA,BPW,BRE,BRF,BVF | M | + | Left/gauche | 11/04 ▸ 06/08 | 8E0959455K | **698610** |
| 2.0 TDi,2.0 TDi 16V | 8EC0, 8ED0 | D | 1968 | BLB,BNA,BPW,BRE,BRF,BVG | A | + | Left/gauche | 11/04 ▸ 06/08 | 8E0959455K | **698610** |
| 2.0 TDi,2.0 TDi 16V | 8EC0, 8ED0 | D | 1968 | BLB,BNA,BPW,BRE,BRF,BVG | A | + | Right/Droite | 11/04 ▸ 06/08 | 8E0959455N | **698611** |
| 2.5 TDi V6 24V | 8EC0, 8ED0 | D | 2496 | BCZ,BDG | M | + | | 11/04 ▸ 05/06 | 8E0959455M | **698612** |
| 2.5 TDi V6 24V | 8EC0, 8ED0 | D | 2496 | BCZ,BDG | A | + | | 11/04 ▸ 05/06 | 8E0959455M | **698612** |

## A4 (2007>)

| | | | CC | | | AC | | | OE | Valeo |
|---|---|---|---|---|---|---|---|---|---|---|
| 1.8 TFSi 120 16V<br>1.8 TFSi 160 16V<br>1.8 TFSi 16V | 8K20, 8K50 | E | 1798 | CABA,CABB,CDHA,CDHB | M | +/- | | 11/07 ▸ | 8K0959455F | |
| 1.8 TFSi 120 16V<br>1.8 TFSi 160 16V<br>1.8 TFSi 16V | 8K20, 8K50 | E | 1798 | CABA,CABB,CDHA,CDHB | M | +/- | | 11/07 ▸ | 8K0959455G | |

Fan Motor + Blades Moteur + hélice Lüftermotor + Lüfterrad Motorino + Ventola Ventilatormotor Fan motoru + Kanatlar
Moto-ventilador + Aspas Мотор вентилятора + лопасти вентилятора Ventilátor motor és lapát Motor sahary + vrtule Ventilator motor + Lame Μοτέρ ανεμιστήρων + Πτερωτές



• **New** Nouveau **Nuevo** Novo **Nuovo** Nieuw **Neu** Nowość **Yeni** Новый Νέο **Novy**

## A4 (2007>) (.../...)

| Type Ctr. | | CC | | AC | | | | OE | Valeo |
|---|---|---|---|---|---|---|---|---|---|
| 1.8 TFSi 120 16V<br>1.8 TFSi 160 16V | 8K20, 8K50 | E | 1798 | CABB,CDHA,CDHB | A | +/- | | 11/07 ▸ | 8K0959455G | |
| 1.8 TFSi 120 16V<br>1.8 TFSi 160 16V | 8K20, 8K50 | E | 1798 | CABB,CDHA,CDHB | A | +/- | | 11/07 ▸ | 8K0959455F | |
| 2.0 TFSi 16V<br>2.0 TFSi 179 16V<br>2.0 TFSi 211 16V | 8K20, 8K50 | E | 1984 | CDNB,CDNC | M | +/- | | 06/08 ▸ | 8K0959455G | |
| 2.0 TFSi 16V<br>2.0 TFSi 179 16V<br>2.0 TFSi 211 16V | 8K20, 8K50 | E | 1984 | CDNB,CDNC | M | +/- | | 06/08 ▸ | 8K0959455F | |
| 2.0 TFSi 16V<br>2.0 TFSi 179 16V<br>2.0 TFSi 211 16V | 8K20, 8K50 | E | 1984 | CDNB,CDNC | A | +/- | | 06/08 ▸ | 8K0959455F | |
| 2.0 TFSi 16V<br>2.0 TFSi 179 16V<br>2.0 TFSi 211 16V | 8K20, 8K50 | E | 1984 | CDNB,CDNC | A | +/- | | 06/08 ▸ | 8K0959455G | |
| 3.2 FSi V6 24V | 8K20, 8K50 | E | 3197 | CALA | M | +/- | | 11/07 ▸ | 8K0959455G | |
| 3.2 FSi V6 24V | 8K20, 8K50 | E | 3197 | CALA | M | +/- | | 11/07 ▸ | 8K0959455F | |
| 3.2 FSi V6 24V<br>3.2 FSi V6 265 24V | 8K20, 8K50 | E | 3197 | CALA | A | +/- | | 11/07 ▸ | 8K0959455F | |
| 3.2 FSi V6 24V<br>3.2 FSi V6 265 24V | 8K20, 8K50 | E | 3197 | CALA | A | +/- | | 11/07 ▸ | 8K0959455G | |
| 2.0 TDi 120 16V<br>2.0 TDi 136 16V<br>2.0 TDi 143 16V<br>2.0 TDi 163 16V<br>2.0 TDi 16V<br>2.0 TDi 170 16V<br>2.0 TDi e 136 16V | 8K20, 8K50 | D | 1968 | CAGA/F,CAGB/F,CAGC/F,CAHA/F,CAHB/F | M | +/- | | 11/07 ▸ | 8K0959455F | |
| 2.0 TDi 120 16V<br>2.0 TDi 136 16V<br>2.0 TDi 143 16V<br>2.0 TDi 163 16V<br>2.0 TDi 16V<br>2.0 TDi 170 16V<br>2.0 TDi e 136 16V | 8K20, 8K50 | D | 1968 | CAGA/F,CAGB/F,CAGC/F,CAHA/F,CAHB/F | M | +/- | | 11/07 ▸ | 8K0959455G | |
| 2.0 TDi 136 16V<br>2.0 TDi 143 16V<br>2.0 TDi 16V<br>2.0 TDi e 136 16V | 8K20, 8K50 | D | 1968 | CAGA/F,CAGB/F | A | +/- | | 11/07 ▸ | 8K0959455F | |
| 2.0 TDi 136 16V<br>2.0 TDi 143 16V<br>2.0 TDi 16V<br>2.0 TDi e 136 16V | 8K20, 8K50 | D | 1968 | CAGA/F,CAGB/F | A | +/- | | 11/07 ▸ | 8K0959455G | |
| 2.7 TDi V6 190 24V | 8K20, 8K50 | D | 2698 | CGKA/F | M | +/- | | 06/08 ▸ | 8K0959455G | |
| 2.7 TDi V6 190 24V | 8K20, 8K50 | D | 2698 | CGKA/F | M | +/- | | 06/08 ▸ | 8K0959455F | |
| 2.7 TDi V6 163 24V<br>2.7 TDi V6 190 24V | 8K20, 8K50 | D | 2698 | CAMA,CAMB,CGKA/F,CGKB/F | A | +/- | | 11/07 ▸ | 8K0959455G | |
| 2.7 TDi V6 163 24V<br>2.7 TDi V6 190 24V | 8K20, 8K50 | D | 2698 | CAMA,CAMB,CGKA/F,CGKB/F | A | +/- | | 11/07 ▸ | 8K0959455F | |
| 3.0 TDi V6 24V | 8K20, 8K50 | D | 2967 | CAPA,CCWA/F | M | +/- | | 11/07 ▸ | 8K0959455F | |
| 3.0 TDi V6 24V | 8K20, 8K50 | D | 2967 | CAPA,CCWA/F | M | +/- | | 11/07 ▸ | 8K0959455G | |
| 3.0 TDi V6 24V | 8K20, 8K50 | D | 2967 | CAPA,CCWA/F,CCWB/F | A | +/- | | 04/08 ▸ | 8K0959455G | |
| 3.0 TDi V6 24V | 8K20, 8K50 | D | 2967 | CAPA,CCWA/F,CCWB/F | A | +/- | | 04/08 ▸ | 8K0959455F | |

## A4 CABRIOLET (2002>2005)

| | | | | | | | | | | |
|---|---|---|---|---|---|---|---|---|---|---|
| 1.8 i Turbo 20V | 8H70 | E | 1781 | BFB | M | +/- | Right/Droite | 07/02 ▸ 12/05 | 8E0959455N | **698611** |
| 1.8 i Turbo 20V | 8H70 | E | 1781 | BFB | M | +/- | Left/gauche | 07/02 ▸ 12/05 | 8E0959455K | **698610** |
| 1.8 i Turbo 20V | 8H70 | E | 1781 | BFB | A | +/- | Left/gauche | 07/02 ▸ 12/05 | 8E0959455K | **698610** |
| 1.8 i Turbo 20V | 8H70 | E | 1781 | BFB | A | +/- | Right/Droite | 07/02 ▸ 12/05 | 8E0959455N | **698611** |
| 2.0 i 20V | 8H70 | E | 1984 | ALT | M | +/- | Right/Droite | 11/04 ▸ 12/05 | 8E0959455N | **698611** |
| 2.0 i 20V | 8H70 | E | 1984 | ALT | M | +/- | Left/gauche | 11/04 ▸ 12/05 | 8E0959455K | **698610** |
| 2.4 i V6 30V | 8H70 | E | 2393 | AMM,BDV | M | +/- | | 04/02 ▸ | 8E0959455A | **698609** |
| 2.4 i V6 30V | 8H70 | E | 2393 | AMM,BDV | M | +/- | Right/Droite | 04/02 ▸ 12/05 | 8E0959455N | **698611** |
| 2.4 i V6 30V | 8H70 | E | 2393 | AMM,BDV | A | +/- | Right/Droite | 04/02 ▸ 12/05 | 8E0959455N | **698611** |
| 2.4 i V6 30V | 8H70 | E | 2393 | AMM,BDV | A | | | 04/02 ▸ | 8E0959455A | **698609** |
| 3.0 i V6 30V | 8H70 | E | 2976 | ASN,BBJ | M | +/- | | 04/02 ▸ | 8E0959455A | **698609** |
| 3.0 i V6 30V | 8H70 | E | 2976 | ASN,BBJ | M | +/- | Right/Droite | 04/02 ▸ 12/05 | 8E0959455N | **698611** |
| 3.0 i V6 30V | 8H70 | E | 2976 | ASN,BBJ | A | +/- | Right/Droite | 04/02 ▸ 12/05 | 8E0959455N | **698611** |
| 3.0 i V6 30V | 8H70 | E | 2976 | ASN | A | +/- | Left/gauche | 06/03 ▸ | 8E0959455A | **698609** |

# AUDI (.../...)

## A4 CABRIOLET (2002>2005) (.../...)

| Type Ctr. | | CC | | AC | | | | OE | Valeo |
|---|---|---|---|---|---|---|---|---|---|
| 3.0 i V6 30V | 8H70 | E | 2976 | ASN,BBJ | A | | | 04/02 ▸ | 8E0959455A | 698609 |
| 2.5 TDI V6 24V | 8H70 | D | 2496 | BCZ,BDG,BFC | M | +/- | Left/gauche | 08/02 ▸ 12/05 | 8E0959455M | 698612 |
| 2.5 TDI V6 24V | 8H70 | D | 2496 | BCZ,BDG,BFC | A | +/- | Right/Droite | 08/02 ▸ 12/05 | 8E0959455M | 698612 |

## A4 CABRIOLET II (2006>2009)

| | | | | | | | | | | |
|---|---|---|---|---|---|---|---|---|---|---|
| 1.8 i Turbo 20V | 8HE0 | E | 1781 | BFB | M | + | Left/gauche | 01/06 ▸ 03/09 | 8E0959455K | 698610 |
| 1.8 i Turbo 20V | 8HE0 | E | 1781 | BFB | M | + | Right/Droite | 01/06 ▸ 03/09 | 8E0959455N | 698611 |
| 1.8 i Turbo 20V | 8HE0 | E | 1781 | BFB | A | + | Left/gauche | 01/06 ▸ 03/09 | 8E0959455K | 698610 |
| 1.8 i Turbo 20V | 8HE0 | E | 1781 | BFB | A | + | Right/Droite | 01/06 ▸ 03/09 | 8E0959455N | 698611 |
| 2.0 TFSi 16V | 8HE0 | E | 1984 | BWE | M | + | Left/gauche | 06/06 ▸ 03/09 | 8E0959455K | 698610 |
| 2.0 TFSi 16V | 8HE0 | E | 1984 | BWE | M | + | Right/Droite | 06/06 ▸ 03/09 | 8E0959455N | 698611 |
| 2.0 TFSi 16V | 8HE0 | E | 1984 | BWE | A | + | Left/gauche | 01/06 ▸ 03/09 | 8E0959455K | 698610 |
| 2.0 TFSi 16V | 8HE0 | E | 1984 | BWE | A | + | Right/Droite | 01/06 ▸ 03/09 | 8E0959455N | 698611 |
| 3.2 FSi V6 24V | 8HE0 | E | 3123 | AUK | M | + | Right/Droite | 01/06 ▸ 03/09 | 8E0959455N | 698611 |
| 3.2 FSi V6 24V | 8HE0 | E | 3123 | AUK | M | + | Left/gauche | 01/06 ▸ | 8E0959455A | 698609 |
| 3.2 FSi V6 24V | 8HE0 | E | 3123 | AUK | A | + | Left/gauche | 01/06 ▸ | 8E0959455A | 698609 |
| 3.2 FSi V6 24V | 8HE0 | E | 3123 | AUK | A | + | Right/Droite | 01/06 ▸ 03/09 | 8E0959455N | 698611 |
| 2.0 TDi | 8HE0 | D | 1968 | BPW | M | + | Left/gauche | 01/06 ▸ 03/09 | 8E0959455K | 698610 |
| 2.0 TDi | 8HE0 | D | 1968 | BPW,BRC | M | + | Right/Droite | 01/06 ▸ 03/09 | 8E0959455N | 698611 |
| 2.0 TDi | 8HE0 | D | 1968 | BPW,BRC | A | + | Right/Droite | 01/06 ▸ 03/09 | 8E0959455N | 698611 |
| 2.0 TDi | 8HE0 | D | 1968 | BPW | A | + | Left/gauche | 01/06 ▸ 03/09 | 8E0959455K | 698610 |

## A5

| | | | | | | | | | | |
|---|---|---|---|---|---|---|---|---|---|---|
| 3.0 TDi V6 24V | 8T30 | D | 2967 | CAPA | M | + | | 12/07 ▸ 05/08 | 8K0959455G | |
| 022501 ▸ | | | | | | | | | | |
| 3.0 TDi V6 24V | 8T30 | D | 2967 | CAPA | A | + | | 06/07 ▸ | 8K0959455G | |
| 3.0 TDi V6 24V | 8T30 | D | 2967 | CAPA | A | + | | 06/07 ▸ | 8K0959455F | |
| 3.0 TDi V6 24V | 8T30 | D | 2967 | CAPA | M | + | | 06/07 ▸ 12/07 | 8K0959455C | •696240 |
| ▸ 022500 | | | | | | | | | | |
| 3.0 TDi V6 24V | 8T30 | D | 2967 | CAPA | M | + | | 06/07 ▸ 12/07 | 8K0959455A | •696241 |

## A5 CABRIOLET (2009>)

| | | | | | | | | | | |
|---|---|---|---|---|---|---|---|---|---|---|
| 2.0 TDI | 8F70 | D | 1968 | CAHA/F,CAHB/F | M | +/- | | 05/09 ▸ | 8K0959455G | |

## A6 (97>2001)

| | | | | | | | | | | |
|---|---|---|---|---|---|---|---|---|---|---|
| 1.8 i 20V,1.8 i Turbo 20V | 4B2/0/H, 4B5/0/H | E | 1781 | AEB,AFY,AJL,AJP,ANB,APU,AQE ARK | M | +/- | | 04/97 ▸ 05/01 | 8D0959455C | 698155 |
| 1.8 i Turbo 20V | 4B20 | E | 1781 | APU,ARK | M | | | 11/98 ▸ 05/01 | 8D0959455J | |
| 1.8 i 20V,1.8 i Turbo 20V | 4B2/0/H, 4B5/0/H | E | 1781 | AEB,AFY,AJP,ANB,APU,AQE,ARK | A | +/- | | 04/97 ▸ 05/01 | 8D0959455C | 698155 |
| 2.4 i V6,2.4 i V6 30V | 4B2/0/H, 4B5/0/H | E | 2393 | AGA,AJG,ALF,ALW,APC,APS,APZ ARJ,ARN | M | +/- | | 04/97 ▸ 05/01 | 8D0959455C | 698155 |
| 2.4 i V6,2.4 i V6 30V | 4B2/0/H, 4B5/0/H | E | 2393 | AGA,AJG,ALF,ALW,APC,APS,APZ ARJ,ARN | M | | | 04/97 ▸ 05/01 | 8D0959455J | |
| 2.4 i V6,2.4 i V6 30V | 4B2/0/H, 4B5/0/H | E | 2393 | AGA,AJG,ALF,APC,APS,APZ,ARJ | A | +/- | | 04/97 ▸ 05/01 | 8D0959455C | 698155 |
| 2.4 i V6,2.4 i V6 30V | 4B2/0/H, 4B5/0/H | E | 2393 | AGA,AJG,ALF,APC,APS,APZ,ARJ | A | | | 04/97 ▸ 05/01 | 8D0959455J | |
| 2.7 i V6 Bi turbo | 4B2/0/H, 4B5/0/H | E | 2671 | AJK | M | +/- | | 03/98 ▸ 05/01 | 8D0959455C | 698155 |
| 2.7 i V6 Bi Turbo | 4B5/0/H | E | 2671 | AJK | M | | | 03/98 ▸ 05/01 | 8D0959455J | |
| 2.7 i V6 Bi Turbo | 4B20, 4B50 | E | 2671 | AJK | A | +/- | | 02/99 ▸ 05/01 | 8D0959455C | 698155 |
| 2.7 i V6 Bi Turbo | 4B50 | E | 2671 | AJK | A | | | 02/99 ▸ 05/01 | 8D0959455J | |
| 2.8 i V6 30V | 4B2/0/H, 4B5/0/H | E | 2771 | ACK,AGE,ALG,APR,AQD | M | +/- | | 04/97 ▸ 05/01 | 8D0959455C | 698155 |
| 2.8 i V6 30V | 4B2/0/H, 4B5/0/H | E | 2771 | ACK,AGE,ALG,APR,AQD | M | | | 04/97 ▸ 05/01 | 8D0959455J | |
| 2.8 i V6 30V | 4B2/0/H, 4B5/0/H | E | 2771 | ACK,AGE,ALG,APR,AQD | A | +/- | | 04/97 ▸ 05/01 | 8D0959455C | 698155 |
| 2.8 i V6 30V | 4B2/0/H, 4B5/0/H | E | 2771 | ACK,AGE,ALG,APR,AQD | A | | | 04/97 ▸ 05/01 | 8D0959455J | |
| 4.2 i V8 40V | 4B40, 4B60 | E | 4172 | ARS | A | +/- | | 04/99 ▸ 05/01 | 8D0959455C | 698155 |
| 4.2 i V8 40V | 4B60 | E | 4172 | ARS | A | | | 04/99 ▸ 05/01 | 8D0959455J | |
| 1.9 TDi | 4B2/0/H, 4B5/0/H | D | 1896 | AFN,AJM | M | +/- | | 04/97 ▸ 05/01 | 8D0959455C | 698155 |
| 1.9 TDi | 4B2/0/H, 4B5/0/H | D | 1896 | AFN,AJM | A | +/- | | 04/97 ▸ 05/01 | 8D0959455C | 698155 |
| 2.5 TDi V6 24V | 4B2/0/H, 4B5/0/H | D | 2496 | AFB,AKN | M | +/- | | 04/97 ▸ 05/01 | 8D0959455C | 698155 |
| 2.5 TDi V6 24V | 4B2/0/H, 4B5/0/H | D | 2496 | AFB,AKN | M | | | 04/97 ▸ 05/01 | 8D0959455J | |
| 2.5 TDi V6 24V | 4B2/0/H, 4B5/0/H | D | 2496 | AFB,AKN | A | +/- | | 07/97 ▸ 05/01 | 8D0959455C | 698155 |
| 2.5 TDi V6 24V | 4B2/0/H, 4B5/0/H | D | 2496 | AFB,AKN | A | | | 07/97 ▸ 05/01 | 8D0959455J | |

## A6 (2001>2004)

| | | | | | | | | | | |
|---|---|---|---|---|---|---|---|---|---|---|
| 1.8 i Turbo 20V | 4B20, 4B50 | E | 1781 | AWT | M | +/- | | 06/01 ▸ 04/05 | 8D0959455N | |
| 1.8 i Turbo 20V | 4B20, 4B50 | E | 1781 | AWT | M | + | | 06/01 ▸ | 8D0959455P | |
| 1.8 i Turbo 20V | 4B20, 4B50 | E | 1781 | AWT | M | | | 06/01 ▸ 04/05 | 8D0959455N | |
| 1.8 i Turbo 20V | 4B20, 4B50 | E | 1781 | AWT | A | +/- | | 06/01 ▸ 04/05 | 8D0959455N | |
| 1.8 i Turbo 20V | 4B20, 4B50 | E | 1781 | AWT | A | + | | 06/01 ▸ | 8D0959455P | |
| 2.0 i 20V | 4B20, 4B50 | E | 1984 | ALT | M | + | | 06/01 ▸ | 8D0959455P | |
| 2.0 i 20V | 4B20, 4B50 | E | 1984 | ALT | M | | Left/gauche | 06/01 ▸ 04/05 | 8E0959455K | 698610 |

Fan Motor + Blades Moteur + hélice Lüftermotor + Lüfterrad Motorino + Ventola Ventilatormotor Fan motoru + Kanatlar
Moto-ventilador + Aspas Мотор вентилятора + лопасти вентилятора Ventilátor motor és lapát Motor sahary + vrtule Ventilator motor + Lame Μοτέρ ανεμιστήρων + Πτερωτές



• **New** Nouveau **Nuevo** Novo **Nuovo** Nieuw **Neu** Nowość **Yeni** Новый Νέο **Novy**

# AUDI (.../...)

## A6 (2001>2004) (.../...)

| | | | CC | | | AC | | | OE | Valeo |
|---|---|---|---|---|---|---|---|---|---|---|
| 2.0 i 20V | 4B20, 4B50 | E | 1984 | ALT | M | | Left/gauche | 06/01 ▸ | 8E0959455 | 698610 |
| 2.0 i 20V | 4B20, 4B50 | E | 1984 | ALT | M | | Right/Droite | 06/01 ▸ | 8E0959455B | 698611 |
| 2.0 i 20V | 4B20, 4B50 | E | 1984 | ALT | M | | Right/Droite | 06/01 ▸ 04/05 | 8E0959455N | 698611 |
| 2.0 i 20V | 4B20, 4B50 | E | 1984 | ALT | A | + | | 06/01 ▸ | 8D0959455P | |
| 2.0 i 20V | 4B20, 4B50 | E | 1984 | ALT | A | | Left/gauche | 06/01 ▸ 04/05 | 8E0959455K | 698610 |
| 2.0 i 20V | 4B20, 4B50 | E | 1984 | ALT | A | | Right/Droite | 06/01 ▸ 04/05 | 8E0959455N | 698611 |
| 2.0 i 20V | 4B20, 4B50 | E | 1984 | ALT | A | | Left/gauche | 06/01 ▸ | 8E0959455 | 698610 |
| 2.0 i 20V | 4B20, 4B50 | E | 1984 | ALT | A | | Right/Droite | 06/01 ▸ | 8E0959455B | 698611 |
| 2.4 i V6 30V | 4B20, 4B50 | E | 2393 | AMM,ASM,BDV | M | +/- | | 06/01 ▸ 04/05 | 8D0959455N | |
| 2.4 i V6 30V | 4B20, 4B50 | E | 2393 | AMM,ASM,BDV | M | + | | 06/01 ▸ | 8D0959455P | |
| 2.4 i V6 30V | 4B20, 4B50 | E | 2393 | BDV | M | | | 06/01 ▸ 04/05 | 8D0959455N | |
| 2.4 i V6 30V | 4B20, 4B50 | E | 2393 | AMM,BDV | A | +/- | | 06/01 ▸ 04/05 | 8D0959455N | |
| 2.4 i V6 30V | 4B20, 4B50 | E | 2393 | AMM,BDV | A | + | | 06/01 ▸ | 8D0959455P | |
| 2.4 i V6 30V | 4B20, 4B50 | E | 2393 | BDV | A | | | 06/01 ▸ 04/05 | 8D0959455N | |
| 2.7 i V6 Bi Turbo | 4B20, 4B50 | E | 2671 | ARE,BES | M | + | | 06/01 ▸ 05/04 | 8D0959455P | |
| 2.7 i V6 Bi Turbo | 4B20, 4B50 | E | 2671 | ARE,BES | M | | | 06/01 ▸ 05/04 | 8D0959455N | |
| 2.7 i V6 Bi Turbo | 4B20, 4B50 | E | 2671 | ARE,BES | A | + | | 06/01 ▸ | 8D0959455P | |
| 2.7 i V6 Bi Turbo | 4B20, 4B50 | E | 2671 | ARE,BES | A | | | 06/01 ▸ 04/05 | 8D0959455N | |
| 3.0 i V6 30V | 4B20, 4B50 | E | 2976 | ASN,BBJ | M | + | | 06/01 ▸ | 8D0959455P | |
| 3.0 i V6 30V | 4B20, 4B50 | E | 2976 | ASN,BBJ | M | | Right/Droite | 06/01 ▸ | 8E0959455B | 698611 |
| 3.0 i V6 30V | 4B20, 4B50 | E | 2976 | ASN,BBJ | M | | Left/gauche | 06/01 ▸ | 8E0959455A | 698609 |
| 3.0 i V6 30V | 4B20, 4B50 | E | 2976 | ASN,BBJ | M | | Right/Droite | 06/01 ▸ 04/05 | 8E0959455N | 698611 |
| 3.0 i V6 30V | 4B20, 4B50 | E | 2976 | ASN,BBJ | A | + | | 06/01 ▸ | 8D0959455P | |
| 3.0 i V6 30V | 4B20, 4B50 | E | 2976 | ASN,BBJ | A | | Left/gauche | 06/01 ▸ | 8E0959455A | 698609 |
| 3.0 i V6 30V | 4B20, 4B50 | E | 2976 | ASN,BBJ | A | | Right/Droite | 06/01 ▸ | 8E0959455B | 698611 |
| 3.0 i V6 30V | 4B20, 4B50 | E | 2976 | ASN,BBJ | A | | Right/Droite | 06/01 ▸ 04/05 | 8E0959455N | 698611 |
| 1.9 TDi | 4B20, 4B50 | D | 1896 | AVF,AWX | M | +/- | | 06/01 ▸ 01/05 | 8D0959455N | |
| 1.9 TDi | 4B20, 4B50 | D | 1896 | AVF,AWX | M | + | | 06/01 ▸ | 8D0959455P | |
| 1.9 TDi | 4B20, 4B50 | D | 1896 | AVF,AWX | A | +/- | | 06/01 ▸ 01/05 | 8D0959455N | |
| 1.9 TDi | 4B20, 4B50 | D | 1896 | AVF,AWX | A | + | | 06/01 ▸ | 8D0959455P | |
| 2.5 TDi V6 | 4B20, 4B50 | D | 2496 | BFC | M | +/- | | 07/02 ▸ 08/03 | 8D0959455N | |
| 2.5 TDi V6,2.5 TDi V6 24V | 4B20, 4B50 | D | 2496 | AKE,AYM,BFC | M | + | | 06/01 ▸ 08/03 | 8D0959455P | |
| 2.5 TDi V6,2.5 TDi V6 24V | 4B20, 4B50 | D | 2496 | AKE,AYM,BAU,BCZ,BDG,BDH | M | | | 06/01 ▸ 04/05 | 8D0959455N | |
| 2.5 TDi V6,2.5 TDi V6 24V | 4B20, 4B50 | D | 2496 | AKE,BFC | A | +/- | | 06/01 ▸ 08/03 | 8D0959455N | |
| 2.5 TDi V6,2.5 TDi V6 24V | 4B20, 4B50 | D | 2496 | AKE,AYM,BFC | A | + | | 06/01 ▸ 08/03 | 8D0959455P | |
| 2.5 TDi V6,2.5 TDi V6 24V | 4B20, 4B50 | D | 2496 | AKE,AYM,BAU,BCZ,BDG,BDH | A | | | 06/01 ▸ 04/05 | 8D0959455N | |

## A6 (2004>2008)

| | | | | | | | | | | |
|---|---|---|---|---|---|---|---|---|---|---|
| 2.0 TFSi 16V | 4F20, 4F50 | E | 1984 | BPJ | M | | Right/Droite | 06/05 ▸ 09/08 | 4F0959455A | 696018 |
| 2.0 TFSi 16V | 4F20, 4F50 | E | 1984 | BPJ | M | | Left/gauche | 06/05 ▸ 09/08 | 4F0959455 | 696017 |
| 2.0 TFSi 16V | 4F50 | E | 1984 | BPJ | A | | Left/gauche | 12/05 ▸ 09/08 | 4F0959455 | 696017 |
| 2.0 TFSi 16V | 4F50 | E | 1984 | BPJ | A | | Right/Droite | 12/05 ▸ 09/08 | 4F0959455A | 696018 |
| 2.4 i V6 24V | 4F20 | E | 2393 | BDW | M | + | | 04/04 ▸ 09/08 | 4F0959455A | 696018 |
| 2.4 i V6 24V | 4F20 | E | 2393 | BDW | M | + | | 04/04 ▸ 09/08 | 4F0959455 | 696017 |
| 2.4 i V6 24V | 4F20, 4F50 | E | 2393 | BDW | M | | Right/Droite | 01/05 ▸ 09/08 | 4F0959455A | 696018 |
| 2.4 i V6 24V | 4F50 | E | 2393 | BDW | M | | Left/gauche | 03/05 ▸ 09/08 | 4F0959455 | 696017 |
| 2.4 i V6 24V | 4F20 | E | 2393 | BDW | A | + | | 07/04 ▸ 09/08 | 4F0959455 | 696017 |
| 2.4 i V6 24V | 4F20 | E | 2393 | BDW | A | + | | 07/04 ▸ 09/08 | 4F0959455A | 696018 |
| 2.4 i V6 24V | 4F20, 4F50 | E | 2393 | BDW | A | | Left/gauche | 01/05 ▸ 09/08 | 4F0959455 | 696017 |
| 2.4 i V6 24V | 4F20, 4F50 | E | 2393 | BDW | A | | Right/Droite | 01/05 ▸ 09/08 | 4F0959455A | 696018 |
| 2.8 FSi V6 24V | 4F20, 4F50 | E | 2773 | BDX | M | + | Right/Droite | 11/06 ▸ 09/08 | 4F0959455A | 696018 |
| 2.8 FSi V6 24V | 4F20, 4F50 | E | 2773 | BDX | M | | Left/gauche | 11/06 ▸ 09/08 | 4F0959455 | 696017 |
| 2.8 FSi V6 24V | 4F20, 4F50 | E | 2773 | BDX | A | + | Right/Droite | 11/06 ▸ 09/08 | 4F0959455A | 696018 |
| 2.8 FSi V6 24V | 4F20, 4F50 | E | 2773 | BDX | A | | Left/gauche | 11/06 ▸ 09/08 | 4F0959455 | 696017 |
| 3.0 V6 30V | 4F20 | E | 2976 | BBJ | A | + | | 04/04 ▸ 05/06 | 4F0959455 | 696017 |
| 3.0 V6 30V | 4F20 | E | 2976 | BBJ | A | + | | 04/04 ▸ 05/06 | 4F0959455A | 696018 |
| 3.0 V6 30V | 4F20, 4F50 | E | 2976 | BBJ | A | | Right/Droite | 04/04 ▸ 05/06 | 4F0959455A | 696018 |
| 3.0 V6 30V | 4F20, 4F50 | E | 2976 | BBJ | A | | Left/gauche | 04/04 ▸ 05/06 | 4F0959455 | 696017 |
| 3.2 FSi V6 24V | 4F20 | E | 3123 | AUK | M | + | | 04/04 ▸ 09/08 | 4F0959455A | 696018 |
| 3.2 FSi V6 24V | 4F20 | E | 3123 | AUK | M | + | | 04/04 ▸ 09/08 | 4F0959455 | 696017 |
| 3.2 FSi V6 24V | 4F20, 4F50 | E | 3123 | AUK | M | | Right/Droite | 07/04 ▸ 09/08 | 4F0959455A | 696018 |
| 3.2 FSi V6 24V | 4F50 | E | 3123 | AUK | M | | Left/gauche | 03/05 ▸ 09/08 | 4F0959455 | 696017 |
| 3.2 FSi V6 24V | 4F20 | E | 3123 | AUK | A | + | | 04/04 ▸ 09/08 | 4F0959455 | 696017 |
| 3.2 FSi V6 24V | 4F20 | E | 3123 | AUK | A | + | | 04/04 ▸ 09/08 | 4F0959455A | 696018 |
| 3.2 FSi V6 24V | 4F20, 4F50 | E | 3123 | AUK | A | | Left/gauche | 04/04 ▸ 09/08 | 4F0959455 | 696017 |
| 3.2 FSi V6 24V | 4F20, 4F50 | E | 3123 | AUK | A | | Right/Droite | 04/04 ▸ 09/08 | 4F0959455A | 696018 |
| 2.0 TDi 16V | 4F20 | D | 1968 | BLB,BNA | M | + | | 07/04 ▸ 11/05 | 4F0959455 | 696017 |
| 2.0 TDi 16V | 4F20 | D | 1968 | BLB,BNA | M | + | | 07/04 ▸ 11/05 | 4F0959455A | 696018 |
| 2.0 TDi 16V | 4F20, 4F50 | D | 1968 | BLB,BNA,BRE,BRF,BVG | M | | Left/gauche | 02/05 ▸ 09/08 | 4F0959455 | 696017 |
| 2.0 TDi 16V | 4F20, 4F50 | D | 1968 | BLB,BNA,BRE,BRF,BVG | M | | Right/Droite | 02/05 ▸ 09/08 | 4F0959455A | 696018 |

# AUDI (.../...)

## A6 (2004>2008) (.../...)

| | | | CC | | | AC | | | OE | Valeo |
|---|---|---|---|---|---|---|---|---|---|---|
| 2.0 TDi 16V | 4F20, 4F50 | D | 1968 | BRE | A | | Left/gauche | 10/05 ▸ 09/08 | 4F0959455 | **696017** |
| 2.0 TDi 16V | 4F20, 4F50 | D | 1968 | BRE | A | | Right/Droite | 10/05 ▸ 09/08 | 4F0959455A | **696018** |

## A6 (2008>)

| | | | CC | | | AC | | | OE | Valeo |
|---|---|---|---|---|---|---|---|---|---|---|
| 2.0 TFSI 16V | 4F20, 4F50 | E | 1984 | BPJ | M | +/- | Right/Droite | 10/08 ▸ | 4F0959455A | **696018** |
| 2.0 TFSI 16V | 4F20, 4F50 | E | 1984 | BPJ | M | +/- | Left/gauche | 10/08 ▸ | 4F0959455 | **696017** |
| 2.0 TFSI 16V | 4F20, 4F50 | E | 1984 | BPJ | A | +/- | Right/Droite | 10/08 ▸ | 4F0959455A | **696018** |
| 2.0 TFSI 16V | 4F20, 4F50 | E | 1984 | BPJ | A | +/- | Left/gauche | 10/08 ▸ | 4F0959455 | **696017** |
| 2.8 FSI V6 24V | 4F20, 4F50 | E | 2773 | CCDA | M | | Left/gauche | 10/08 ▸ | 4F0959455 | **696017** |
| 2.8 FSI V6 24V | 4F20, 4F50 | E | 2773 | CCDA | M | | | 10/08 ▸ | 4F0959455A | **696018** |
| 2.8 FSI V6 24V | 4F20, 4F50 | E | 2773 | CCDA,CCEA | A | | | 10/08 ▸ | 4F0959455 | **696017** |
| 2.8 FSI V6 24V | 4F20, 4F50 | E | 2773 | CCDA,CCEA | A | | Right/Droite | 10/08 ▸ | 4F0959455A | **696018** |
| 3.0 TFSI V6 24V | 4F2/0/5, 4F5/0/5 | E | 2995 | CAJA,CCAA | A | | Left/gauche | 10/08 ▸ | 4F0959455N | **696242** |
| 3.0 TFSI V6 24V | 4F2/0/5, 4F5/0/5 | E | 2995 | CAJA,CCAA | A | | Right/Droite | 10/08 ▸ | 4F0959455M | **696243** |
| 2.0 TDI 16V,2.0 TDI e 16V | 4F2/0/E, 4F5/0/E | D | 1968 | CAGB/F,CAHA/F | M | +/- | Right/Droite | 10/08 ▸ | 4F0959455A | **696018** |
| 2.0 TDI 16V,2.0 TDI e 16V | 4F2/0/E, 4F5/0/E | D | 1968 | CAGB/F,CAHA/F | M | +/- | Left/gauche | 10/08 ▸ | 4F0959455 | **696017** |
| 2.0 TDI 16V | 4F20, 4F50 | D | 1968 | CAGB/F,CAHA/F | A | +/- | Right/Droite | 10/08 ▸ | 4F0959455A | **696018** |
| 2.0 TDI 16V | 4F20, 4F50 | D | 1968 | CAGB/F,CAHA/F | A | +/- | Left/gauche | 10/08 ▸ | 4F0959455 | **696017** |

## A6 ALLROAD (2006>2008)

| | | | CC | | | AC | | | OE | Valeo |
|---|---|---|---|---|---|---|---|---|---|---|
| 3.2 FSi V6 24V | 4FH0 | E | 3123 | AUK | M | +/- | Right/Droite | 05/06 ▸ 10/08 | 4F0959455A | **696018** |
| 3.2 FSi V6 24V | 4FH0 | E | 3123 | AUK | M | +/- | | 05/06 ▸ 10/08 | 4F0959455 | **696017** |
| 3.2 FSi V6 24V | 4FH0 | E | 3123 | AUK | A | +/- | Right/Droite | 05/06 ▸ 10/08 | 4F0959455A | **696018** |
| 3.2 FSi V6 24V | 4FH0 | E | 3123 | AUK | A | +/- | | 05/06 ▸ 10/08 | 4F0959455 | **696017** |

## A8 (94>2002)

| | | | CC | | | AC | | | OE | Valeo |
|---|---|---|---|---|---|---|---|---|---|---|
| 2.8 E V6,2.8 i V6 | 4D2G | E | 2771 | AAH,AEJ | M | + | | 06/94 ▸ 03/96 | 8D0959455C | **698155** |
| 4D-S-004 301 ▸ | | | | | | | | | | |
| 2.8 E V6 30V | 4D2G | E | 2771 | ACK | M | | | 07/95 ▸ 12/98 | 8D0959455C | **698155** |
| 2.8 E V6 30V | 4D2G | E | 2771 | APR,AQD | M | | | 10/98 ▸ 02/01 | 4D0959455F | |
| 4D-X-005 001 ▸ | | | | | | | | | | |
| 2.8 E V6 | 4D2G | E | 2771 | AEJ | A | - | | 07/95 ▸ 03/96 | 8D0959455C | **698155** |
| 2.8 E V6 30V | 4D2G | E | 2771 | ACK | A | | | 04/96 ▸ 12/98 | 8D0959455C | **698155** |
| 2.8 E V6 30V | 4D2G | E | 2771 | AMX,APR,AQD | A | | | 10/98 ▸ 09/02 | 4D0959455F | |
| 4D-X-005 001 ▸ | | | | | | | | | | |
| 2.8 E V6 30V | 4D2G | E | 2771 | ALG,AMX,APR,AQD | M | +/- | | 10/97 ▸ 05/00 | 8D0959455C | **698155** |
| ▸ 4D-1-000 801 | | | | | | | | | | |
| 2.8 E V6 30V,2.8 i V6 | 4D2G | E | 2771 | AAH,ALG,AMX,APR,AQD | A | +/- | | 06/94 ▸ 05/00 | 8D0959455C | **698155** |
| ▸ 4D-1-000 801 | | | | | | | | | | |
| 3.7 i V8 32V | 4D2G | E | 3697 | AEW,AKJ | A | | | 04/96 ▸ 12/98 | 8D0959455C | **698155** |
| 3.7 i V8 32V | 4D2G | E | 3697 | AKC,AQG | A | | | 10/98 ▸ 09/02 | 4D0959455F | |
| 4D-X-005 001 ▸ | | | | | | | | | | |
| 3.7 i V8 32V | 4D2G | E | 3697 | AKC,AQG | A | +/- | | 10/98 ▸ 05/00 | 8D0959455C | **698155** |
| ▸ 4D-1-000 801 | | | | | | | | | | |
| 4.2 i V8 32V | 4D2G | E | 4172 | ABZ,AGH,AKG | A | | | 06/94 ▸ 12/98 | 8D0959455C | **698155** |
| 4D-V-000 001 ▸ | | | | | | | | | | |
| 4.2 i V8 32V,4.2 i V8 40V | 4D8G, 4D2/2/G | E | 4172 | ABZ,AQF,ARU,AUW | A | | | 10/98 ▸ 09/02 | 4D0959455F | |
| 4D-X-005 001 ▸ | | | | | | | | | | |
| 4.2 i V8 32V,4.2 i V8 40V | 4D8G, 4D2/2/G | E | 4172 | ABZ,AQF,ARU,AUW | A | +/- | | 10/98 ▸ 05/00 | 8D0959455C | **698155** |
| ▸ 4D-1-000 801 | | | | | | | | | | |
| 6.0 i W12 48V | 4D2G, 4D8G | E | 6005 | AZC | A | | | 03/01 ▸ 09/02 | 4D0959455F | |
| 4D-X-005 001 ▸ | | | | | | | | | | |
| 2.5 TDi V6 24V | 4D2G | D | 2496 | AFB,AKE,AKN | A | +/- | | 06/97 ▸ 05/00 | 8D0959455C | **698155** |
| 2.5 TDi V6 24V | 4D2G | D | 2496 | AFB,AKE,AKN | A | | | 10/98 ▸ 09/02 | 4D0959455F | |
| 4D-X-005 001 ▸ | | | | | | | | | | |
| 2.5 TDi V6 24V | 4D2G | D | 2496 | AFB,AKE,AKN | M | +/- | | 06/97 ▸ 05/00 | 8D0959455C | **698155** |
| ▸ 4D-1-000 801 | | | | | | | | | | |
| 3.3 TDi V8 32V | 4D2G | D | 3328 | AKF | A | | | 12/99 ▸ 09/02 | 4D0959455F | |
| 4D-X-005 001 ▸ | | | | | | | | | | |
| 3.3 TDi V8 32V | 4D2G | D | 3328 | AKF | A | +/- | | 12/99 ▸ 05/00 | 8D0959455C | **698155** |

## A8 (2002>2007)

| | | | CC | | | AC | | | OE | Valeo |
|---|---|---|---|---|---|---|---|---|---|---|
| 3.0 TDi V6 24V | 4E20 | D | 2967 | ASB | A | +/- | | 01/04 ▸ 10/07 | 4D0959455F | |

## CABRIOLET

| | | | CC | | | AC | | | OE | Valeo |
|---|---|---|---|---|---|---|---|---|---|---|
| 2.3 E | 8G70 | E | 2309 | NG | M | +/- | | 06/91 ▸ 07/94 | 327959455A | **696038** |
| 2.3 E | 8G70 | E | 2309 | NG | A | +/- | | 06/91 ▸ 07/94 | 327959455A | **696038** |

## COUPÉ (80>88)

| | | | CC | | | AC | | | OE | Valeo |
|---|---|---|---|---|---|---|---|---|---|---|
| 1.6 | 8550, 8560 | E | 1588 | DD,YN | M | - | | 02/81 ▸ 08/82 | 165959455L | **696031** |

Fan Motor + Blades Moteur + hélice Lüftermotor + Lüfterrad Motorino + Ventola Ventilatormotor Fan motoru + Kanatlar
Moto-ventilador + Aspas Мотор вентилятора + лопасти вентилятора Ventilátor motor és lapát Motor sahary + vrtule Ventilator motor + Lame Μοτέρ ανεμιστήρων + Πτερωτές



• **New** Nouveau **Nuevo** Novo **Nuovo** Nieuw **Neu** Nowość **Yeni** Новый Νέο **Novy**

# AUDI (.../...)

| | | | CC | | | AC | | | OE | Valeo | |
|---|---|---|---|---|---|---|---|---|---|---|---|
| **COUPÉ (80>88) (.../...)** | | | | | | | | | | | |
| 1.6 | 8550 | E | 1588 | DD,YN | A | - | | 02/81 ▸ 08/82 | 165959455L | **696031** | |
| 1.8 i | 8553, 8563 | E | 1781 | DZ | M | + | | 08/86 ▸ 07/88 | 327959455A | **696038** | |
| 1.8,1.8 i | 855/0/3/J/K, 856/0/3 | E | 1781 | DS,DZ,JV,SF | M | - | | 09/82 ▸ 07/88 | 165959455L | **696031** | |
| 1.8 i | 855/J/K | E | 1781 | JN | M | - | | 01/85 ▸ 07/88 | 327959455A | **696038** | |
| 1.8 | 855/0/3/J/K | E | 1781 | DS,JV,SF | A | - | | 09/82 ▸ 07/88 | 165959455L | **696031** | |
| 1.8 i | 855/J/K | E | 1781 | JN | A | - | | 01/85 ▸ 07/88 | 327959455A | **696038** | |
| 1.9 | 8553, 8563 | E | 1921 | WN | M | - | | 10/80 ▸ 08/83 | 165959455L | **696031** | |
| 1.9 | 8553, 8563 | E | 1921 | WN | A | - | | 10/80 ▸ 08/83 | 165959455L | **696031** | |
| 2.0 i | 8563, 855/3/K | E | 1994 | HP,JS | M | - | | 08/83 ▸ 07/85 | 165959455L | **696031** | |
| ▸ 85-F-220 000 | | | | | | | | | | | |
| 2.0 i | 8563, 855/3/K | E | 1994 | HP,JS | A | - | | 08/83 ▸ 07/85 | 165959455L | **696031** | |
| ▸ 85-F-220 000 | | | | | | | | | | | |
| 2.2 i | 8553, 8563 | E | 2144 | KE,KL | M | - | | 08/81 ▸ 08/84 | 165959455L | **696031** | |
| 2.2,2.2 i | 8553, 8563 | E | 2226 | HY,KV | M | - | | 08/84 ▸ 07/85 | 165959455L | **696031** | |
| ▸ 85-F-220 000 | | | | | | | | | | | |
| 2.2 i | 8553, 8563 | E | 2226 | HY,KV | A | - | | 08/84 ▸ 07/85 | 165959455L | **696031** | |
| **COUPÉ (88>96)** | | | | | | | | | | | |
| 1.8 E | 8B30 | E | 1781 | DZ | M | - | | 08/89 ▸ 07/91 | 165959455L | **696031** | |
| **Q5** | | | | | | | | | | | |
| 2.0 TFSI 16V | 8RB0 | E | 1984 | CDNC | M | +/- | | 11/08 ▸ | 8K0959455F | | |
| 2.0 TFSI 16V | 8RB0 | E | 1984 | CDNC | M | +/- | Left/gauche | 11/08 ▸ | 8K0959455G | | |
| 2.0 TFSI 16V | 8RB0 | E | 1984 | CDNC | A | +/- | | 11/08 ▸ | 8K0959455F | | |
| 2.0 TFSI 16V | 8RB0 | E | 1984 | CDNC | A | +/- | Left/gauche | 11/08 ▸ | 8K0959455G | | |
| 3.2 FSI V6 24V | 8RB/0/5 | E | 3197 | CALB | A | +/- | Left/gauche | 11/08 ▸ | 8K0959455G | | |
| 3.2 FSI V6 24V | 8RB/0/5 | E | 3197 | CALB | A | +/- | | 11/08 ▸ | 8K0959455F | | |
| 2.0 TDI 16V | 8RB0 | D | 1968 | CAHA/F,CAHB/F | M | +/- | Left/gauche | 11/08 ▸ | 8K0959455G | | |
| 2.0 TDI 16V | 8RB0 | D | 1968 | CAHA/F,CAHB/F | A | +/- | Left/gauche | 11/08 ▸ | 8K0959455G | | |
| 3.0 TDI V6 24V | 8RB0 | D | 2967 | CCWA/F,CCWB/F | A | +/- | Left/gauche | 11/08 ▸ | 8K0959455G | | |
| 3.0 TDI V6 24V | 8RB0 | D | 2967 | CCWA/F,CCWB/F | A | +/- | | 11/08 ▸ | 8K0959455F | | |
| **RS6 QUATTRO** | | | | | | | | | | | |
| 4.2 i V8 40V | 4B40 | E | 4172 | BCY | A | | | 07/02 ▸ 04/04 | 8D0959455N | | |
| **S3 (98>2003)** | | | | | | | | | | | |
| 1.8 i Turbo 20V | 8L1B | E | 1781 | AMK,APY | M | +/- | C | 11/98 ▸ | 6X0959455A | **696042** | |
| **S3 (2006>)** | | | | | | | | | | | |
| 2.0 TFSi 16V | 8P1S, 8PAS | E | 1984 | BZC,CDLA,CDLC | M | +/- | Right/Droite | 06/07 ▸ | 1K0959455DH | | |
| 2.0 TFSi 16V | 8P1S | E | 1984 | BHZ | M | + | Left/gauche | 10/06 ▸ 06/08 | 1K0959455DL | | |
| 2.0 TFSi 16V | 8P1S | E | 1984 | BHZ | M | + | Left/gauche | 10/06 ▸ | 1K0959455N | | |
| 2.0 TFSi 16V | 8P1S | E | 1984 | BHZ | M | + | Right/Droite | 10/06 ▸ 06/08 | 1K0959455DH | | |
| 2.0 TFSi 16V | 8P1S, 8PAS | E | 1984 | CDLA,CDLC | A | +/- | Right/Droite | 11/08 ▸ | 1K0959455DH | | |
| 2.0 TFSi 16V | 8P1S | E | 1984 | BHZ | A | + | Right/Droite | 10/06 ▸ | 1K0959455DH | | |
| 2.0 TFSi 16V | 8P1S | E | 1984 | BHZ | A | + | Left/gauche | 10/06 ▸ | 1K0959455N | | |
| 2.0 TFSi 16V | 8P1S | E | 1984 | BHZ | A | + | Left/gauche | 10/06 ▸ | 1K0959455DL | | |
| **S4 (2008>)** | | | | | | | | | | | |
| 3.0 TFSI V6 24V | 8K2S, 8K5S | E | 2995 | CAKA | M | +/- | | 11/08 ▸ | 8K0959455F | | |
| 3.0 TFSI V6 24V | 8K2S, 8K5S | E | 2995 | CAKA | M | +/- | | 11/08 ▸ | 8K0959455G | | |
| 3.0 TFSI V6 24V | 8K2S, 8K5S | E | 2995 | CAKA | A | +/- | | 11/08 ▸ | 8K0959455F | | |
| 3.0 TFSI V6 24V | 8K2S, 8K5S | E | 2995 | CAKA | A | +/- | | 11/08 ▸ | 8K0959455G | | |
| **S8 (96>98)** | | | | | | | | | | | |
| 4.2 i V8 | 4D2G | E | 4172 | AKH | M | | | 08/97 ▸ 12/98 | 4D0959455F | | |
| ▸ 4D-X-005 001 | | | | | | | | | | | |
| 4.2 i V8 | 4D2G | E | 4172 | AHC,AKH | A | | | 08/97 ▸ 12/98 | 4D0959455F | | |
| **S8 (99>2002)** | | | | | | | | | | | |
| 4.2 i V8 | 4D2G | E | 4172 | AQH,AVP | M | | | 05/99 ▸ 09/02 | 4D0959455F | | |
| 4.2 i V8 | 4D2G | E | 4172 | AQH,AVP,AYS,BCS | A | | | 05/99 ▸ 09/02 | 4D0959455F | | |
| **TT (98>2006)** | | | | | | | | | | | |
| 1.8 i Turbo 20V | 8N30, 8N90 | E | 1781 | AJQ,APP,ARY,BAM | M | +/- | | 10/98 ▸ 06/06 | 6E0959455A | | |
| 1.8 i Turbo 20V | 8N30, 8N90 | E | 1781 | AJQ,APP,ARY,AUM,BAM | M | +/- | | 10/98 ▸ | 6X0959455A | **696042** | |
| 1.8 i Turbo 20V | 8N30, 8N90 | E | 1781 | APP | M | +/- | | 09/99 ▸ 10/01 | 1J0959455M | **698373** | |
| 1.8 i Turbo 20V | 8N30, 8N90 | E | 1781 | AJQ,APX,ARY | M | + | | 10/98 ▸ 08/02 | 1J0959455M | **698373** | |
| 1.8 i Turbo 20V | 8N30, 8N90 | E | 1781 | AJQ,APP,ARY,AUM,AUQ,BAM | M | | | 07/99 ▸ | 1J0959455M | **698373** | |

| Type Ctr. | | CC | | AC | | | OE | Valeo | |
|---|---|---|---|---|---|---|---|---|---|
| **AUDI** (.../...) | | | | | | | | | |
| **TT (98>2006) (.../...)** | | | | | | | | | |
| 1.8 i Turbo 20V 8N30, 8N90 | E | 1781 | AUM | M | | | 01/01 ▸ 06/06 | 6E0959455A | |
| **TT (2006>)** | | | | | | | | | |
| 1.8 TFSi 16V 8J30, 8J90 | E | 1798 | CDAA | M | | Left/gauche | 06/08 ▸ | 1K0959455DL | |
| 1.8 TFSi 16V 8J30, 8J90 ▸ 8J-9-011 766 | E | 1798 | CDAA | M | | Right/Droite | 06/08 ▸ 07/08 | 1K0959455DH | |
| 2.0 TFSi 16V 8J3/0/S, 8J9/0/S | E | 1984 | BWA,CDLA,CDLB | M | | Left/gauche | 08/06 ▸ | 1K0959455DL | |
| 2.0 TFSi 16V 8J3/0/S, 8J9/0/S | E | 1984 | BWA,CCZA,CDLA,CDLB | A | | Left/gauche | 08/06 ▸ | 1K0959455DL | |
| 2.0 TFSi 16V 8J3/0/S, 8J9/0/S ▸ 8J-9-011 766 | E | 1984 | BWA,CDLA,CDLB | M | | Right/Droite | 08/06 ▸ 07/08 | 1K0959455DH | |
| 2.0 TFSi 16V 8J3/0/S, 8J9/0/S ▸ 8J-9-011 766 | E | 1984 | BWA,CCZA,CDLA,CDLB | A | | Right/Droite | 08/06 ▸ 07/08 | 1K0959455DH | |
| 3.2 i V6 24V 8J30, 8J90 | E | 3189 | BUB | M | | Left/gauche | 08/06 ▸ | 1K0959455DL | |
| 3.2 i V6 24V 8J30, 8J90 | E | 3189 | BUB | A | | Left/gauche | 08/06 ▸ | 1K0959455DL | |
| 3.2 i V6 24V 8J30, 8J90 ▸ 8J-9-011 766 | E | 3189 | BUB | M | | | 08/06 ▸ 07/08 | 1K0959455DH | |
| 3.2 i V6 24V 8J30, 8J90 ▸ 8J-9-011 766 | E | 3189 | BUB | A | | | 08/06 ▸ 07/08 | 1K0959455DH | |
| 2.0 TDI 16V 8J30, 8J90 | D | 1968 | CBBB/F | M | | Left/gauche | 06/08 ▸ | 1K0959455DL | |
| 2.0 TDI 16V 8J30, 8J90 | D | 1968 | CBBB/F | M | | Right/Droite | 06/08 ▸ 07/08 | 1K0959455DH | |
| **BMW** | | | | | | | | | |
| **3 SERIES E30** | | | | | | | | | |
| 316i AB/11/12, AC/11/12, AJ/11/12 | E | 1596 | M40B16ME.8 | M | + | | 09/88 ▸ 09/93 | 64541381395 | |
| 316i,316i Touring AB/21/22, AC/21/22 AJ/21/22 | E | 1596 | M40B16ME.8 | A | + | | 09/88 ▸ 09/93 | 64541381395 | |
| 316,318i 10/11/12/52/72, 13 15/31/32/52/72, AC/51/71, AK/31/51/71 | E | 1766 | M10B/18V/18L/18LE/18K | M | +/- | | 09/82 ▸ 09/88 | 64541376973 | |
| 316,318i 10/11/21/22/32/42/62 81/82, 13/25/41/42/62/82, AC/61/81, AK/41/61 | E | 1766 | M10B/18L/18LE/18V/18K | A | +/- | | 09/82 ▸ 08/88 | 64541376973 | |
| 318i,318i Touring,318iS AG71, AF/51/52/91 AJ/51/52/72, BA/51/52 | E | 1796 | M40B/18ME/18,M42B18 | M | + | | 09/87 ▸ 09/93 | 64541381395 | |
| 318i,318i Touring AG81, AF/61/62, AJ 61/62/82, BA/61/62 | E | 1796 | M40B/18/18ME | A | + | | 09/87 ▸ 09/93 | 64541381395 | |
| 320i 11/32/51/52, AA31, AD31, 14/32/51/52 | E | 1991 | M20B/20/20M1.Z7 | M | +/- | | 09/82 ▸ 12/91 | 64541376973 | |
| 320i,320i Touring,320iS AC/95, AK95, AH/51 52/71, BA/11/12/21/22/31/32 | E | 1991 | M20B/20/20M1.Z7,S14B20 | M | + | | 07/86 ▸ 09/93 | 64541381395 | |
| 320i 11/42/61/62, AA41, AD41, 14/42/62 | E | 1991 | M20B/20/20M1.Z7 | A | +/- | | 09/82 ▸ 12/91 | 64541376973 | |
| 320i,320i Touring AH/61/62/81, BA/41 42 | E | 1991 | M20B/20/20M1.Z7/20K | A | + | | 09/86 ▸ 09/93 | 64541381395 | |
| 323i 11/71, 14/71/72 | E | 2316 | M20B23L | M | +/- | | 09/82 ▸ 09/86 | 64541376973 | |
| 323i 11/81/82, 14/81/82 | E | 2316 | M20B23L | A | +/- | | 09/82 ▸ 09/86 | 64541376973 | |
| 325i,325iX 11/11/12, 12/31/32 71/91, 14/11/12, 15/31/32/71/91 | E | 2494 | M20B/25ME/25M1.Z7/25M/G | M | +/- | | 09/85 ▸ 03/91 | 64541376973 | |
| 325i,325i Touring AG/51/52/95, BB/11 325iX Touring 12/31/32 | E | 2494 | M20B/25M1.Z7/25M/G | M | + | | 03/86 ▸ 09/93 | 64541381395 | |
| 325i,325iX 11/21/22, 12/01/41 42/81, 14/21/22, 15/01/41/42/81 | E | 2494 | M20B/25ME/25M/G/25M1.Z7 | A | +/- | | 09/85 ▸ 03/91 | 64541376973 | |
| 325i,325i Touring AG/05/61/62, BB/21 325iX Touring 22/41/42 | E | 2494 | M20B/25M1.Z7/25M/G | A | + | | 02/86 ▸ 09/93 | 64541381395 | |
| 325i BB/21/22/41/42 | E | 2494 | M20B/25M1.Z7/25M/G | A | - | | 02/86 ▸ 12/92 | 64541376973 | |
| 325e 12/51/52, 15/51/52 | E | 2693 | M20B27M1.Z7 | M | +/- | | 02/85 ▸ 08/87 | 64541376973 | |
| 325e 12/61/62, 15/61/62 | E | 2693 | M20B/27ME/27M1.Z7 | A | +/- | | 02/85 ▸ 08/87 | 64541376973 | |
| 324d AE11 | D | 2443 | M21D24W | M | + | | 09/85 ▸ 09/86 | 64541376973 | |
| 324d,324td,324td Touring AE11, AH91, AD/91 | D | 2443 | M21D/24WA/24W | M | + | | 09/86 ▸ 09/93 | 64541381395 | |
| 324d AE21 | D | 2443 | M21D24W | A | + | | 09/85 ▸ 09/86 | 64541376973 | |
| 324d,324td,324td Touring AE21, AH01, AD/01 | D | 2443 | M21D/24WA/24W | A | + | | 09/86 ▸ 09/93 | 64541381395 | |
| **3 SERIES E36** | | | | | | | | | |
| 316i CA/11/12 | E | 1596 | M40B16ME.8 | M | + | | 12/90 ▸ 09/92 | 64541392913 | **696058** |
| 316i CA/21/22 | E | 1596 | M40B16ME.8 | A | + | | 04/91 ▸ 09/92 | 64541392913 | **696058** |
| 318i,318iS BE/51/52, CA/31/32 51/52 | E | 1796 | M40B18,M42B18 | M | + | | 12/90 ▸ 02/00 | 64541392913 | **696058** |
| 318i,318iS BE/61/62, CA/41/42 61/62 | E | 1796 | M40B18,M42B18 | A | + | | 01/91 ▸ 02/00 | 64541392913 | **696058** |
| 320i BF/11/12, BJ/11/12, CB/11/12 | E | 1991 | M50B20 | M | + | | 12/90 ▸ 06/95 | 64541392913 | **696058** |
| 320i BF/21/22, BJ/21/22, CB/21/22 | E | 1991 | M50B20 | A | + | | 12/90 ▸ 07/95 | 64541392913 | **696058** |
| 325i BF/31/32, BJ/51/52, CB/31/32 | E | 2494 | M50B25 | M | + | | 12/90 ▸ 07/95 | 64541392913 | **696058** |

Fan Motor + Blades Moteur + hélice Lüftermotor + Lüfterrad Motorino + Ventola Ventilatormotor Fan motoru + Kanatlar
Moto-ventilador + Aspas Мотор вентилятора + лопасти вентилятора Ventilátor motor és lapát Motor sahary + vrtule Ventilator motor + Lame Μοτέρ ανεμιστήρων + Πτερωτές



• **New** Nouveau **Nuevo** Novo **Nuovo** Nieuw **Neu** Nowość **Yeni** Новый Νέο **Novy**

| Type Ctr. | | CC | | AC | | | OE | Valeo | |
|---|---|---|---|---|---|---|---|---|---|

# BMW (.../...)

## 3 SERIES E36 (.../...)

| | | | | | | | | | | |
|---|---|---|---|---|---|---|---|---|---|---|
| 325i | BF/41/42, BJ/61/62, CB/41/42 | E | 2494 | M50B25 | A | + | | 12/90 ▸ 08/95 | 64541392913 | 696058 |
| 318tds | CC/51/52, CF/51/52 CJ/50/51/52 | D | 1665 | M41D | M | + | | 09/94 ▸ 04/01 | 64541392913 | 696058 |
| 325td,325tds | CC/11/12/31/32, CF 91/92 | D | 2497 | M51A,M51D25 | M | + | | 08/91 ▸ 09/99 | 64541392913 | 696058 |
| 325td,325tds | CC/21/22/41/42, CF 01/02 | D | 2497 | M51A,M51D25 | A | + | | 08/91 ▸ 09/99 | 64541392913 | 696058 |

## 5 SERIES E28

| | | | | | | | | | | |
|---|---|---|---|---|---|---|---|---|---|---|
| M535i | DC/51/52/71/72 | E | 3430 | M30B/35M.E7/34M | M | +/- | | 02/85 ▸ 08/88 | 64541376973 | |
| M535i | DC/61/81/82 | E | 3430 | M30B/34M/35M.E7 | A | +/- | | 12/84 ▸ 08/88 | 64541376973 | |
| M5 | DC/91/92 | E | 3453 | M88/3 | M | +/- | | 10/84 ▸ 08/88 | 64541376973 | |

## 5 SERIES E34

| | | | | | | | | | | |
|---|---|---|---|---|---|---|---|---|---|---|
| 518i | HA/11/12/31/32, HG/11/12/31 | E | 1796 | M40B18,M43B18 | M | + | | 09/89 ▸ 09/96 | 64541381395 | |
| 518i | HA/11/12/31/32, HG/11/12/31 | E | 1796 | M40B18,M43B18 | M | + | | 09/89 ▸ 09/96 | 64541392913 | 696058 |
| 518i | HA/21/22/41/42 | E | 1796 | M40B18,M43B18 | A | + | | 10/93 ▸ 09/95 | 64541392913 | 696058 |
| 518i | HA/21/22/41/42 | E | 1796 | M40B18,M43B18 | A | + | | 10/93 ▸ 09/95 | 64541381395 | |
| 520i | HB/11/12/31/32/51/52, HG/51/52 | E | 1991 | M20B/20M1.Z7/20M0.E8,M50B/20 | M | + | | 01/88 ▸ 09/96 | 64541381395 | |
| 520i | HB/11/12/31/32/51/52, HG/51/52 | E | 1991 | M20B/20M0.E8,M20B20M1.Z7,M50B/20 | M | + | | 01/88 ▸ 09/96 | 64541392913 | 696058 |
| 520i | HB/21/22/41/42/61/62, HG/61/62 | E | 1991 | M20B/20M0.E8/20M1.Z7,M50B20 | A | + | | 01/88 ▸ 09/96 | 64541381395 | |
| 520i | HB/21/22/41/42/61/62, HG/61/62 | E | 1991 | M20B/20M0.E8/20M1.Z7,M50B/20 | A | + | | 01/88 ▸ 09/96 | 64541392913 | 696058 |
| 525i,525iX | HC/11/12/13, HD/51 52/71/72, HJ/51/52/71/72 | E | 2494 | M20B25,M50B25 | M | + | | 02/88 ▸ 09/96 | 64541392913 | 696058 |
| 525i,525iX | HC/11/12/13, HD/51 52/71/72, HJ/51/52/71/72 | E | 2494 | M20B25,M50B25 | M | + | | 02/88 ▸ 09/96 | 64541381395 | |
| 525i,525iX | HC/21/22/23, HD/61 62/81/82, HJ/61/62/81/82 | E | 2494 | M20B25,M50B25 | A | + | | 02/88 ▸ 09/96 | 64541381395 | |
| 525i,525iX | HC/21/22/23, HD/61 62/81/82, HJ/61/62/81/82 | E | 2494 | M20B25,M50B25 | A | + | | 02/88 ▸ 09/96 | 64541392913 | 696058 |
| 530i | HC/51/52 | E | 2986 | M30B30M.E7 | M | + | | 01/88 ▸ 04/90 | 64541381395 | |
| 530i | HC/51/52 | E | 2986 | M30B30M.E7 | M | + | | 01/88 ▸ 04/90 | 64541392913 | 696058 |
| 530i | HC/61/62 | E | 2986 | M30B30M.E7 | A | + | | 01/88 ▸ 06/90 | 64541381395 | |
| 530i | HC/61/62 | E | 2986 | M30B30M.E7 | A | + | | 01/88 ▸ 06/90 | 64541392913 | 696058 |
| 530i | HE/11/12, HK/11/12 | E | 2997 | M60B30 | M | + | | 09/92 ▸ 09/96 | 64541381395 | |
| 530i | HE/11/12, HK/11/12 | E | 2997 | M60B30 | M | + | | 09/92 ▸ 09/96 | 64541392913 | 696058 |
| 530i | HE/21/22, HK/21/22 | E | 2997 | M60B30 | A | + | | 09/92 ▸ 09/96 | 64541392913 | 696058 |
| 530i | HE/21/22, HK/21/22 | E | 2997 | M60B30 | A | + | | 09/92 ▸ 09/96 | 64541381395 | |
| 535i | HD/11/12/13 | E | 3430 | M30B/35M7/34M | M | + | | 01/88 ▸ 04/93 | 64541392913 | 696058 |
| 535i | HD/11/12/13 | E | 3430 | M30B/34M/35M7 | M | + | | 01/88 ▸ 04/93 | 64541381395 | |
| 535i | HD/21/22/23 | E | 3430 | M30B/35M7/34M | A | + | | 01/88 ▸ 04/93 | 64541381395 | |
| 535i | HD/21/22/23 | E | 3430 | M30B/35M7/34M | A | + | | 01/88 ▸ 04/93 | 64541392913 | 696058 |
| 540i | HE/51/52, HK/31/32 | E | 3982 | M60B40 | M | + | | 07/93 ▸ 09/96 | 64541392913 | 696058 |
| 540i | HE/61/62, HK/41/42 | E | 3982 | M60B40 | A | + | | 09/92 ▸ 09/96 | 64541392913 | 696058 |
| 524td | HA51 | D | 2443 | M21D24WA | M | + | | 03/88 ▸ 08/91 | 64541381395 | |
| 524td | HA51 | D | 2443 | M21D24WA | M | + | | 03/88 ▸ 08/91 | 64541392913 | 696058 |
| 524td | HA61 | D | 2443 | M21D24WA | A | + | | 03/88 ▸ 08/91 | 64541392913 | 696058 |
| 524td | HA61 | D | 2443 | M21D24WA | A | + | | 03/88 ▸ 08/91 | 64541381395 | |
| 525td,525tds | HA/71/72/91/92, HG 71/72/91 | D | 2497 | M51A,M51D25 | M | + | | 08/91 ▸ 09/96 | 64541392913 | 696058 |
| 525td,525tds | HA/71/72/91/92, HG 71/72/91 | D | 2497 | M51A,M51D25 | M | + | | 08/91 ▸ 09/96 | 64541381395 | |
| 525td,525tds | HA/01/02/81/82, HG 01/81/82 | D | 2497 | M51A,M51D25 | A | + | | 08/91 ▸ 09/96 | 64541381395 | |
| 525td,525tds | HA/01/02/81/82, HG 01/81/82 | D | 2497 | M51A,M51D25 | A | + | | 08/91 ▸ 09/96 | 64541392913 | 696058 |

## 7 SERIES E32

| | | | | | | | | | | |
|---|---|---|---|---|---|---|---|---|---|---|
| 730i | GA/31/32/71/72, GC/21/22 | E | 2986 | M30B/30M.E7/30M | M | | | 09/86 ▸ 03/94 | 64541392913 | 696058 |
| 730i | GA/41/42/81/82 | E | 2986 | M30B/30M/30M.E7 | A | | | 09/86 ▸ 03/94 | 64541392913 | 696058 |
| 730i | GD/11/51 | E | 2997 | M60B30 | M | | | 04/92 ▸ 05/94 | 64541392913 | 696058 |
| 730i | GD/21/22/61/62 | E | 2997 | M60B30 | A | | | 04/92 ▸ 05/94 | 64541392913 | 696058 |
| 735i | GB/31/32/33/51/52, GC/31/51/52 | E | 3430 | M30B/35M.E7/35/34M | M | | | 09/86 ▸ 06/92 | 64541392913 | 696058 |
| 735i | GB/41/42/43/61/62, GC/41/42/43/61/62 | E | 3430 | M30B/35/35M.E7/34M | A | | | 09/86 ▸ 07/92 | 64541392913 | 696058 |
| 740i | GD/41/42/81/82 | E | 3982 | M60B40 | A | | | 09/92 ▸ 05/94 | 64541392913 | 696058 |
| 750i | GB/81/82, GC/81/82/83 | E | 4988 | M70B50 | A | | | 11/86 ▸ 05/94 | 64541392913 | 696058 |

## 8 SERIES E31

| | | | | | | | | | | |
|---|---|---|---|---|---|---|---|---|---|---|
| 840 | EF51 | E | 3982 | M60B40 | M | + | | 03/94 ▸ 07/96 | 64541392913 | 696058 |
| 840 | EF/61/62 | E | 3982 | M60B40 | A | + | | 12/92 ▸ 07/96 | 64541392913 | 696058 |

| Type Ctr. | | CC | | AC | | | OE | Valeo | |
|---|---|---|---|---|---|---|---|---|---|
| **BMW (.../...)** | | | | | | | | | |
| **8 SERIES E31 (.../...)** | | | | | | | | | |
| 840 EF/71/72 | E | 4398 | 448S1 | M | + | | 03/96 ▸ | 64541392913 | **696058** |
| 840 EF/81/82 | E | 4398 | 448S1 | A | + | | 03/96 ▸ | 64541392913 | **696058** |
| 850 EG/11/12 | E | 4988 | M70B50 | M | + | | 09/89 ▸ 08/94 | 64541392913 | **696058** |
| 850 EG/21/22 | E | 4988 | M70B50 | A | + | | 09/89 ▸ 08/94 | 64541392913 | **696058** |
| 850 EG41 | E | 5379 | M73B54 | A | + | | 09/94 ▸ | 64541392913 | **696058** |
| 850 EG/91/92 | E | 5576 | S70B56 | M | + | | 09/92 ▸ 07/96 | 64541392913 | **696058** |
| **M5 E34** | | | | | | | | | |
| 3.6 i HD/91/92 | E | 3535 | S38B36M | M | | | 07/88 ▸ 12/91 | 64541381395 | |
| 3.8 i HJ91, HC/91/92 | E | 3795 | S38B38 | M | | | 12/91 ▸ 09/95 | 64541381395 | |
| **CITROEN** | | | | | | | | | |
| **C2** | | | | | | | | | |
| 1.1 i JGH/FXB/FXC, JMH/FXB/FXC | E | 1124 | TU1A,TU1JP | M | - | | 09/03 ▸ 01/10 | 1253C4 | **696210** |
| 1.4 i,1.4 i 16V JGK/FVB, JMK/FUC/FVB FVC | E | 1360 | ET3J4,TU3A,TU3JP | M | - | | 09/03 ▸ 01/10 | 1253C4 | **696210** |
| 1.6 i 16V JGN/FUC, JMN/FSC/FUB FUC | E | 1587 | TU5JP4,TU5JP4S | M | - | | 09/03 ▸ 01/10 | 1253C4 | **696210** |
| 1.4 HDi JG8/HXB/HZC, JM8/HXB HXC/HZB/HZC | D | 1398 | DV4TD | M | - | | 09/03 ▸ 01/10 | 1253C4 | **696210** |
| 1.6 HDi 16V JM9HZC | D | 1560 | DV6TED4 | M | - | | 11/05 ▸ 01/10 | 1253C4 | **696210** |
| **C3 (2002>2005)** | | | | | | | | | |
| 1.1 i FRHFXB | E | 1124 | TU1JP | M | - | | 09/02 ▸ 10/05 | 1253C4 | **696210** |
| 1.1 i FCH/FXB/FXC, FNH/FXB/FXC | E | 1124 | TU1JP | M | | C | 04/02 ▸ 10/05 | 1253C4 | **696210** |
| 1.1 i FCH/FXB/FXC, FNH/FXB/FXC | E | 1124 | TU1JP | M | | C | 04/02 ▸ 10/05 | 1253C6 | **696133** |
| 1.4 i 16V FNKFUB, FCK/FU/FUC | E | 1360 | ET3J4 | M | - | | 12/03 ▸ 10/05 | 1253C4 | **696210** |
| 1.4 i FCK/FVB/FVC, FNK/FVB/FVC | E | 1360 | TU3JP | M | | C | 04/02 ▸ 10/05 | 1253C6 | **696133** |
| 1.4 i FCK/FVB/FVC, FNK/FVB/FVC | E | 1360 | TU3JP | M | | C | 04/02 ▸ 10/05 | 1253C4 | **696210** |
| 1.4 i FCK/FVE/FVF, FNK/FVE/FVF | E | 1360 | TU3JP | A | | C | 04/02 ▸ 10/05 | 1253C4 | **696210** |
| 1.4 i FCK/FVE/FVF, FNK/FVE/FVF | E | 1360 | TU3JP | A | | C | 04/02 ▸ 10/05 | 1253C6 | **696133** |
| 1.6 i 16V FCNFU | E | 1587 | TU5JP4 | M | - | | 09/02 ▸ 10/05 | 1253C4 | **696210** |
| 1.6 i 16V FCNFUB, FNNFUB | E | 1587 | TU5JP4 | M | | C | 04/02 ▸ 10/05 | 1253C4 | **696210** |
| 1.6 i 16V FCNFUB, FNNFUB | E | 1587 | TU5JP4 | M | | C | 04/02 ▸ 10/05 | 1253C6 | **696133** |
| 1.4 HDi,1.4 HDi 16V FC8/HZ/HZB, FR8/HYB XZB | D | 1398 | DV4TD,DV4TED4 | M | - | C | 04/02 ▸ 10/05 | 1253C4 | **696210** |
| 1.4 HDi,1.4 HDi 16V FC8/HYB/HZB, FN8/HYB HZB | D | 1398 | DV4TD,DV4TED4 | M | | C | 04/02 ▸ 10/05 | 1253C6 | **696133** |
| 1.4 HDi,1.4 HDi 16V FC8/HYB, FN8/HYB/HZB | D | 1398 | DV4TD,DV4TED4 | M | | C | 04/02 ▸ 10/05 | 1253C4 | **696210** |
| 1.6 HDi 16V FC9HXC | D | 1560 | DV6ATED4 | M | - | | 06/05 ▸ 10/05 | 1253C4 | **696210** |
| **C3 (2005>)** | | | | | | | | | |
| 1.4 i GNV FCKFVC | F | 1360 | TU3JP | M | - | | 11/05 ▸ 10/09 | 1253C4 | **696210** |
| 1.1 i FCHFXC | E | 1124 | TU1A | M | - | | 11/05 ▸ 10/09 | 1253C4 | **696210** |
| 1.4 i,1.4 i 16V FCK/FUC/FVB/FVC | E | 1360 | ET3J4,TU3A,TU3JP | M | - | | 11/05 ▸ 10/09 | 1253C4 | **696210** |
| 1.6 i 16V FCN/FUB/FUC | E | 1587 | TU5JP4 | M | - | | 11/05 ▸ 10/09 | 1253C4 | **696210** |
| 1.6 i 16V FCNFUC | E | 1587 | TU5JP4 | A | - | | 12/06 ▸ 10/09 | 1253C4 | **696210** |
| 1.4 HDi FC8HZC | D | 1398 | DV4TD | M | - | | 11/05 ▸ 10/09 | 1253C4 | **696210** |
| 1.6 HDi 16V FL9HXC, FC9/HXC/HZC | D | 1560 | DV6ATED4,DV6TED4 | M | - | | 11/05 ▸ 10/09 | 1253C4 | **696210** |
| **C4** | | | | | | | | | |
| 1.4 i 16V LAKFUC, LCKFUC | E | 1360 | ET3J4 | M | + | | 11/04 ▸ 01/11 | 1253K2 | **696091** |
| 1.4 i 16V LAKFUC, LCKFUC | E | 1360 | ET3J4 | M | - | | 11/04 ▸ 01/11 | 1253A9 | **696177** |
| 1.4 i 16V LAKFUC, LCKFUC ▸ 10821 | E | 1360 | ET3J4 | M | + | | 11/04 ▸ 06/06 | 1253G7 | **696091** |
| 1.6 i 16V LAN/FUC, LDNFUC, LCN FUC/FUL | E | 1587 | TU5JP4 | M | + | | 11/04 ▸ 12/10 | 1253K2 | **696091** |
| 1.6 i 16V LAN/FUC, LDNFUC, LCN FUC/FUL | E | 1587 | TU5JP4 | M | - | | 11/04 ▸ 12/10 | 1253A9 | **696177** |
| 1.6 i 16V LANFUF, LCNFUF | E | 1587 | TU5JP4 | A | + | | 11/04 ▸ 07/08 | 1253K2 | **696091** |
| 1.6 i 16V LANFUF, LCNFUF | E | 1587 | TU5JP4 | A | - | | 11/04 ▸ 07/08 | 1253A9 | **696177** |
| 1.6 i 16V LANFUC, LCNFUC ▸ 10821 | E | 1587 | TU5JP4 | M | + | | 11/04 ▸ 06/06 | 1253G7 | **696091** |
| 1.6 i 16V LANFUF, LCNFUF ▸ 10821 | E | 1587 | TU5JP4 | A | + | | 11/04 ▸ 06/06 | 1253G7 | **696091** |
| 1.6 THP 16V,1.6 VTi 16V LA5/FWC/FXE, LC5/FWC FXE | E | 1598 | EP6,EP6DT | M | + | | 07/08 ▸ 06/10 | 1253K2 | **696091** |

Fan Motor + Blades Moteur + hélice Lüftermotor + Lüfterrad Motorino + Ventola Ventilatormotor Fan motoru + Kanatlar
Moto-ventilador + Aspas Мотор вентилятора + лопасти вентилятора Ventilátor motor és lapát Motor sahary + vrtule Ventilator motor + Lame Μοτέρ ανεμιστήρων + Πτερωτές



• **New** Nouveau **Nuevo** Novo **Nuovo** Nieuw **Neu** Nowość **Yeni** Новый Νέο **Novy**

# CITROEN (.../...)

## C4 (.../...)

| | | | | | | | | | | |
|---|---|---|---|---|---|---|---|---|---|---|
| 1.6 THP 16V,1.6 VTi 16V | LA5/FWC/FXE, LC5/FWC FXE | E | 1598 | EP6,EP6DT | M | - | | 07/08 ▸ 06/10 | 1253A9 | 696177 |
| 1.6 THP 16V,1.6 VTi 16V | LA5/FWF, LC5/FTF/FWF | E | 1598 | EP6,EP6DT | A | + | | 07/08 ▸ 06/10 | 1253K2 | 696091 |
| 1.6 THP 16V,1.6 VTi 16V | LA5/FWF, LC5/FTF/FWF | E | 1598 | EP6,EP6DT | A | - | | 07/08 ▸ 06/10 | 1253A9 | 696177 |
| 2.0 i 16V | LAR/FJC/FKC/FNC, LCR FJC/FNC | E | 1997 | EW10A,EW10J4,EW10J4S | M | + | | 11/04 ▸ 07/08 | 1253K2 | 696091 |
| 2.0 i 16V | LAR/FJC/FKC/FNC, LCR FJC/FNC | E | 1997 | EW10A,EW10J4,EW10J4S | M | - | | 11/04 ▸ 07/08 | 1253A9 | 696177 |
| 2.0 i 16V | LCRFJF | E | 1997 | EW10A | A | + | | 11/04 ▸ 07/08 | 1253K2 | 696091 |
| 2.0 i 16V | LCRFJF | E | 1997 | EW10A | A | - | | 11/04 ▸ 07/08 | 1253A9 | 696177 |
| 2.0 i 16V ▸ 10821 | LCRFNC, LAR/FKC/FNC | E | 1997 | EW10J4,EW10J4S | M | + | | 11/04 ▸ 06/06 | 1253G7 | 696091 |
| 2.0 i 16V ▸ 10821 | LCRFJF | E | 1997 | EW10A | A | + | | 11/04 ▸ 06/06 | 1253G7 | 696091 |
| 1.6 HDi 16V | LA9/HVC/HXC/HY/HYC HZC/HZH, LD9HZC, LC9/HVC/HXC/HYB/HYC/HZC/HZH LG9/HXC/HZC | D | 1560 | DV6ATED4,DV6TED4,DV6TED4B | M | + | | 11/04 ▸ 01/11 | 1253K2 | 696091 |
| 1.6 HDi 16V | LA9/HVC/HXC/HY/HYC HZC/HZH, LD9HZC, LC9/HVC/HXC/HYB/HYC/HZC/HZH LG9/HXC/HZC | D | 1560 | DV6ATED4,DV6TED4,DV6TED4B | M | - | | 11/04 ▸ 01/11 | 1253A9 | 696177 |
| 1.6 HDi 16V | LC9HZ | D | 1560 | DV6TED4 | A | + | | 03/06 ▸ 06/10 | 1253K2 | 696091 |
| 1.6 HDi 16V | LC9HZ | D | 1560 | DV6TED4 | A | - | | 03/06 ▸ 06/10 | 1253A9 | 696177 |
| 1.6 HDi 16V ▸ 10821 | LA9/HXC/HYC/HZC, LC9 HXC/HYB/HZC, LG9/HXC/HZC | D | 1560 | DV6ATED4,DV6TED4 | M | + | | 11/04 ▸ 06/06 | 1253G7 | 696091 |
| 2.0 HDi 16V | LARHRH, LCRHRH | D | 1997 | DW10BTED4 | M | + | | 11/04 ▸ 09/10 | 1253K2 | 696091 |
| 2.0 HDi 16V | LARHRH, LCRHRH | D | 1997 | DW10BTED4 | M | - | | 11/04 ▸ 09/10 | 1253A9 | 696177 |
| 2.0 HDi 16V | LAR/HR, LCR/HR/HRJ | D | 1997 | DW10BTED4 | A | + | | 11/04 ▸ 12/09 | 1253K2 | 696091 |
| 2.0 HDi 16V | LAR/HR, LCR/HR/HRJ | D | 1997 | DW10BTED4 | A | - | | 11/04 ▸ 12/09 | 1253A9 | 696177 |
| 2.0 HDi 16V ▸ 10821 | LARHRH, LCRHRH | D | 1997 | DW10BTED4 | M | + | | 11/04 ▸ 06/06 | 1253G7 | 696091 |
| 2.0 HDi 16V | LAR/HR, LCR/HR/HRJ | D | 1997 | DW10BTED4 | A | + | | 11/04 ▸ 06/06 | 1253G7 | 696091 |

## C4 PICASSO (2006>)

| | | | | | | | | | | |
|---|---|---|---|---|---|---|---|---|---|---|
| 1.8 i 16V | UA6FYC, UD6FYC | E | 1749 | EW7A | M | +/- | | 09/06 ▸ | 1253K2 | 696091 |
| 2.0 i 16V | UARFJH, UDRFJH | E | 1997 | EW10A | M | +/- | | 09/06 ▸ | 1253K2 | 696091 |

## C5 (2001>2004)

| | | | | | | | | | | |
|---|---|---|---|---|---|---|---|---|---|---|
| 1.8 i 16V | DC6FZB, DE6FZB | E | 1749 | EW7J4 | M | + | | 02/01 ▸ 08/04 | 1253K1 | 696132 |
| 1.8 i 16V | DC6FZB, DE6FZB | E | 1749 | EW7J4 | M | + | | 02/01 ▸ 08/04 | 1250G2 | 696132 |
| 1.8 i 16V | DC6FZB, DE6FZB | E | 1749 | EW7J4 | M | - | | 02/01 ▸ 08/04 | 1250G1 | 696141 |
| 1.8 i 16V | DC6FZE | E | 1749 | EW7J4 | A | + | | 02/01 ▸ 08/04 | 1250G2 | 696132 |
| 1.8 i 16V | DC6FZE | E | 1749 | EW7J4 | A | + | | 02/01 ▸ 08/04 | 1253K1 | 696132 |
| 1.8 i 16V | DC6FZE | E | 1749 | EW7J4 | A | - | | 02/01 ▸ 08/04 | 1250G1 | 696141 |
| 2.0 HPi 16V,2.0 i 16V | DCR/FNB/FNC/LZB, DER FNB/FNC/LZB/LZC | E | 1997 | EW10D,EW10J4 | M | + | | 02/01 ▸ 08/04 | 1250G2 | 696132 |
| 2.0 HPi 16V,2.0 i 16V | DCR/FNB/FNC/LZB, DER FNB/FNC/LZB/LZC | E | 1997 | EW10D,EW10J4 | M | + | | 02/01 ▸ 08/04 | 1253K1 | 696132 |
| 2.0 HPi 16V,2.0 i 16V | DCR/FNB/FNC/LZB, DER FNB/FNC/LZB/LZC | E | 1997 | EW10D,EW10J4 | M | - | | 02/01 ▸ 08/04 | 1250G1 | 696141 |
| 2.0 i 16V | DCR/FNE/FNF, DER/FNE FNF | E | 1997 | EW10J4 | A | + | | 02/01 ▸ 08/04 | 1250G2 | 696132 |
| 2.0 i 16V | DCR/FNE/FNF, DER/FNE FNF | E | 1997 | EW10J4 | A | + | | 02/01 ▸ 08/04 | 1253K1 | 696132 |
| 2.0 i 16V | DCR/FNE/FNF, DER/FNE FNF | E | 1997 | EW10J4 | A | - | | 02/01 ▸ 08/04 | 1250G1 | 696141 |
| 3.0 i V6 24V | DCX/FXB/FXC, DEX/FXB FXC | E | 2946 | ES9J4S | M | + | | 02/01 ▸ 08/04 | 1250G2 | 696132 |
| 3.0 i V6 24V | DCX/FXB/FXC, DEX/FXB FXC | E | 2946 | ES9J4S | M | + | | 02/01 ▸ 08/04 | 1253K1 | 696132 |
| 3.0 i V6 24V | DCX/FXE/FXF, DEX/FXE FXF | E | 2946 | ES9J4S | A | + | | 02/01 ▸ 08/04 | 1250G4 | 696140 |
| 2.0 HDi | DCR/HZB, DER/HSB/HYB | D | 1997 | DW10ATED,DW10TD | M | + | | 02/01 ▸ 08/04 | 1253K1 | 696132 |
| 2.0 HDi | DCR/HYB/HZB, DER/HSB HYB/HZB | D | 1997 | DW10ATED,DW10TD | M | + | | 02/01 ▸ 08/04 | 1250G2 | 696132 |
| 2.0 HDi | DCR/HYB/HZB, DER/HSB HYB/HZB | D | 1997 | DW10ATED,DW10TD | M | - | | 02/01 ▸ 08/04 | 1250G5 | 696139 |
| 2.0 HDi | DERHZB, DCR/HYB/HZB | D | 1997 | DW10ATED,DW10TD | M | - | | 02/01 ▸ 08/04 | 1253K1 | 696132 |
| 2.0 HDi | DCR/HZE/HZF, DER/HZE HZF | D | 1997 | DW10ATED | A | + | | 02/01 ▸ 08/04 | 1250G2 | 696132 |

# CITROEN (.../...)

## C5 (2001>2004) (.../...)

| | | | CC | | | AC | | | | OE | Valeo |
|---|---|---|---|---|---|---|---|---|---|---|---|
| 2.0 HDi | DCRHZE, DERHZE | D | 1997 | DW10ATED | A | + | | 02/01 ▸ 08/04 | | 1253K1 | **696132** |
| 2.0 HDi | DCR/HZE/HZF, DER/HZE HZF | D | 1997 | DW10ATED | A | - | | 02/01 ▸ 08/04 | | 1250G5 | **696139** |
| 2.0 HDi | DCRHZF, DERHZF | D | 1997 | DW10ATED | A | - | | 02/01 ▸ 08/04 | | 1253K1 | **696132** |
| 2.2 HDi 16V | DC4HXB, DE4HXB | D | 2179 | DW12TED4 | M | + | | 02/01 ▸ 08/04 | | 1250G4 | **696140** |
| 2.2 HDi 16V | DC4HXE, DE4HXF | D | 2179 | DW12TED4 | A | + | | 02/01 ▸ 08/04 | | 1250G4 | **696140** |

## C8

| | | | | | | | | | | | |
|---|---|---|---|---|---|---|---|---|---|---|---|
| 2.0 i 16V | EAR/FNC, EBR/FJC/FNC | E | 1997 | EW10A,EW10J4 | M | +/- | | 06/02 ▸ | | 1250G5 | **696139** |
| 2.0 i 16V | EAR/FNC, EBR/FJC/FNC | E | 1997 | EW10A,EW10J4 | M | +/- | | 06/02 ▸ | | 1250G2 | **696132** |
| 2.0 i 16V | EAR/FNC, EBR/FJC/FNC | E | 1997 | EW10A,EW10J4 | M | +/- | | 06/02 ▸ | | 1253K1 | **696132** |
| 2.0 i 16V | EARFNC, EBRFJC | E | 1997 | EW10A,EW10J4 | M | + | | 06/02 ▸ | | 1250G7 | **696142** |
| 2.0 i 16V | EAR/FNC, EBR/FJC/FNC | E | 1997 | EW10A,EW10J4 | M | + | Left/gauche | 06/02 ▸ | | 1253P7 | **696142** |
| 2.0 i 16V | EBRFNC | E | 1997 | EW10J4 | M | | | 06/02 ▸ | | 1250G7 | **696142** |
| 2.0 i 16V | EBR/FJF/FNF | E | 1997 | EW10A,EW10J4 | A | +/- | | 06/02 ▸ | | 1250G2 | **696132** |
| 2.0 i 16V | EBR/FJF/FNF | E | 1997 | EW10A,EW10J4 | A | +/- | | 06/02 ▸ | | 1250G5 | **696139** |
| 2.0 i 16V | EBR/FJF/FNF | E | 1997 | EW10A,EW10J4 | A | +/- | | 06/02 ▸ | | 1253K1 | **696132** |
| 2.0 i 16V | EBR/FJF/FNF | E | 1997 | EW10A,EW10J4 | A | + | Left/gauche | 06/02 ▸ | | 1253P7 | **696142** |
| 2.0 i 16V | EBRFJF | E | 1997 | EW10A | A | + | | 02/06 ▸ | | 1250G7 | **696142** |
| 2.0 i 16V | EBRFNF | E | 1997 | EW10J4 | A | | | 06/02 ▸ | | 1250G7 | **696142** |
| 2.2 i 16V | EA3FZC, EB3FZC | E | 2230 | EW12J4 | M | +/- | | 06/02 ▸ 09/05 | | 1253K1 | **696132** |
| 2.2 i 16V | EA3FZC, EB3FZC | E | 2230 | EW12J4 | M | +/- | | 06/02 ▸ 09/05 | | 1250G5 | **696139** |
| 2.2 i 16V | EA3FZC, EB3FZC | E | 2230 | EW12J4 | M | +/- | | 06/02 ▸ 09/05 | | 1250G2 | **696132** |
| 2.2 i 16V | EA3FZC | E | 2230 | EW12J4 | M | + | | 06/02 ▸ 09/05 | | 1250G7 | **696142** |
| 2.2 i 16V | EA3FZC, EB3FZC | E | 2230 | EW12J4 | M | + | Left/gauche | 06/02 ▸ 09/05 | | 1253P7 | **696142** |
| 2.2 i 16V | EB3FZC | E | 2230 | EW12J4 | M | | | 06/02 ▸ 09/05 | | 1250G7 | **696142** |
| 3.0 i V6 24V | EAXFWF, EBXFWF | E | 2946 | ES9J4S | A | +/- | | 06/02 ▸ 09/05 | | 1253K1 | **696132** |
| 3.0 i V6 24V | EAXFWF, EBXFWF | E | 2946 | ES9J4S | A | +/- | | 06/02 ▸ 09/05 | | 1250G2 | **696132** |
| 3.0 i V6 24V | EAXFWF, EBXFWF | E | 2946 | ES9J4S | A | + | Left/gauche | 06/02 ▸ 09/05 | | 1253P7 | **696142** |
| 3.0 i V6 24V | EAXFWF | E | 2946 | ES9J4S | A | + | | 06/02 ▸ 09/05 | | 1250G7 | **696142** |
| 3.0 i V6 24V | EAXFWF, EBXFWF | E | 2946 | ES9J4S | A | + | | 06/02 ▸ 09/05 | | 1250G5 | **696139** |
| 3.0 i V6 24V | EBXFWF | E | 2946 | ES9J4S | A | | | 06/02 ▸ 09/05 | | 1250G7 | **696142** |
| 2.0 HDi 16V | EAR/HTB, EBR/HKH/HRH HTB | D | 1997 | DW10ATED4,DW10BTED4,DW10UTED4 | M | +/- | Right/Droite | 06/02 ▸ | | 1253K1 | **696132** |
| 2.0 HDi 16V | EARHTB, EBRHTB | D | 1997 | DW10ATED4 | M | +/- | | 06/02 ▸ | | 1250G5 | **696139** |
| 2.0 HDi 16V | EARHTB, EBRHTB | D | 1997 | DW10ATED4 | M | +/- | | 06/02 ▸ | | 1250G2 | **696132** |
| 2.0 HDi 16V | EAR/HTB, EBR/HKH/HRH HTB | D | 1997 | DW10ATED4,DW10BTED4,DW10UTED4 | M | + | Left/gauche | 06/02 ▸ | | 1253P7 | **696142** |
| 2.0 HDi 16V | EAR/HTB, EBR/HKH/HRH | D | 1997 | DW10ATED4,DW10BTED4,DW10UTED4 | M | + | | 06/02 ▸ | | 1250G7 | **696142** |
| 2.0 HDi 16V | EBRHTB | D | 1997 | DW10ATED4 | M | | | 06/02 ▸ | | 1250G7 | **696142** |
| 2.0 HDi 16V | EAR/HME, EBR/HME/HWB | D | 1997 | DW10ATED4 | A | +/- | | 06/02 ▸ | | 1250G2 | **696132** |
| 2.0 HDi 16V | EAR/HME, EBR/HME/HWB | D | 1997 | DW10ATED4 | A | +/- | Right/Droite | 06/02 ▸ 10/06 | | 1253K1 | **696132** |
| 2.0 HDi 16V | EAR/HME, EBR/HME/HWB | D | 1997 | DW10ATED4 | A | +/- | | 06/02 ▸ | | 1250G5 | **696139** |
| 2.0 HDi 16V | EAR/HME, EBR/HME/HWB | D | 1997 | DW10ATED4 | A | + | Left/gauche | 06/02 ▸ 10/06 | | 1253P7 | **696142** |
| 2.0 HDi 16V | EAR/HME, EBR/HME/HWB | D | 1997 | DW10ATED4 | A | + | | 06/02 ▸ | | 1250G7 | **696142** |
| 2.0 HDi 16V | EBR/HKH/HRH ▸ 10765 | D | 1997 | DW10BTED4,DW10UTED4 | M | + | | 04/06 ▸ 05/06 | | 1250G2 | **696132** |
| 2.2 HDi 16V | EA4/HWB/HWG, EB4/HWB HWG | D | 2179 | DW12TED4 | M | +/- | Right/Droite | 06/02 ▸ 06/06 | | 1253K1 | **696132** |
| 2.2 HDi 16V | EA4/HWB/HWG, EB4/HWB HWG | D | 2179 | DW12TED4 | M | +/- | | 06/02 ▸ 06/06 | | 1250G2 | **696132** |
| 2.2 HDi 16V | EA4/HWB/HWG, EB4/HWB HWG | D | 2179 | DW12TED4 | M | +/- | | 06/02 ▸ 06/06 | | 1250G5 | **696139** |
| 2.2 HDi 16V | EB4HWG, EA4/HWB/HWG | D | 2179 | DW12TED4 | M | + | | 06/02 ▸ 06/06 | | 1250G7 | **696142** |
| 2.2 HDi 16V | EA4/HWB/HWG, EB4/HWB HWG | D | 2179 | DW12TED4 | M | + | Left/gauche | 06/02 ▸ 06/06 | | 1253P7 | **696142** |
| 2.2 HDi 16V | EB4HWB | D | 2179 | DW12TED4 | M | | | 06/02 ▸ 02/04 | | 1250G7 | **696142** |

## EVASION (98>2002)

| | | | | | | | | | | | |
|---|---|---|---|---|---|---|---|---|---|---|---|
| 2.0 HDi | AFRHZA | D | 1997 | DW10ATED | M | +/- | | 08/99 ▸ 05/02 | | 125394 | **698542** |
| 2.0 HDi | AFRHZA | D | 1997 | DW10ATED | M | +/- | | 08/99 ▸ 05/02 | | 1253F1 | **698542** |

## SAXO (96>99)

| | | | | | | | | | | | |
|---|---|---|---|---|---|---|---|---|---|---|---|
| 1.4 i | S1KFXF, S0K/FWB/FXF | E | 1360 | TU3JP | M | - | | 03/96 ▸ 08/99 | | 125361 | **696188** |
| 1.4 i | S0K/FXD, S1K/FXD/FXT | E | 1360 | TU3JP | A | - | | 04/96 ▸ 08/99 | | 125361 | **696188** |
| 1.6 i,1.6 i 16V | S1NFZF, S0N/FZF, S6N FXF/FZF | E | 1587 | TU5J4,TU5JP | M | - | | 03/96 ▸ 08/99 | | 125361 | **696188** |
| 1.6 i | S0NFZD, S1NFZD | E | 1587 | TU5JP | A | - | | 06/96 ▸ 08/99 | | 125361 | **696188** |
| 1.5 D | S0VJXB, S1VJXB | D | 1527 | TUD5B | M | + | Left/gauche | 02/99 ▸ 08/99 | | 1253A3 | **696190** |

Fan Motor + Blades Moteur + hélice Lüftermotor + Lüfterrad Motorino + Ventola Ventilatormotor Fan motoru + Kanatlar
Moto-ventilador + Aspas Мотор вентилятора + лопасти вентилятора Ventilátor motor és lapát Motor sahary + vrtule Ventilator motor + Lame Μοτέρ ανεμιστήρων + Πτερωτές



• **New** Nouveau **Nuevo** Novo **Nuovo** Nieuw **Neu** Nowość **Yeni** Новый Νέο **Novy**

| Type Ctr. | | CC | | AC | | | OE | Valeo | |
|---|---|---|---|---|---|---|---|---|---|
| **CITROEN (.../...)** | | | | | | | | | |
| **SAXO (96>99) (.../...)** | | | | | | | | | |
| 1.5 D S0VJXB, S1VJXB | D | 1527 | TUD5B | M | + | Right/Droite | 02/99 ▸ 08/99 | 1253A2 | **696190** |
| **SAXO (99>)** | | | | | | | | | |
| 1.4 i S0K/FWB/FXF, S1K/FWB/FXF | E | 1360 | TU3JP | M | - | | 09/99 ▸ 12/03 | 125361 | **696188** |
| 1.4 i S0K/FWL, S1K/FWL/FXD | E | 1360 | TU3JP | A | - | | 09/99 ▸ 12/03 | 125361 | **696188** |
| 1.6 i,1.6 i 16V S6N/FTB/FXB/FXE/FXF FZF | E | 1587 | TU5J4,TU5JP | M | - | | 09/99 ▸ 12/03 | 125361 | **696188** |
| **XANTIA (97>2002)** | | | | | | | | | |
| 1.9 TD X1DHXF, X2DHXF | D | 1905 | XUD9BTF | M | +/- | | 12/97 ▸ 05/02 | 1250F1 | |
| 1.9 TD X1DHXM, X2DHXM | D | 1905 | XUD9BTF | A | +/- | | 12/97 ▸ 05/02 | 125354 | |
| 1.9 TD X1DHXM, X2DHXM | D | 1905 | XUD9BTF | A | - | | 04/99 ▸ 05/02 | 1250F1 | |
| **XSARA (97>2000)** | | | | | | | | | |
| 1.8 i GPL 16V N1LFYF, N2LFYF | F | 1761 | XU7JP4-G | M | + | | 07/97 ▸ 08/00 | 125366 | |
| 1.8 i GPL 16V N1LFYF, N2LFYF | F | 1761 | XU7JP4-G | M | - | | 07/97 ▸ 08/00 | 125363 | **698444** |
| 1.4 i N0K/FXB/FXF/FXG, N1K/FXB/FXF, N2K/FXB/FXF | E | 1360 | TU3JP | M | + | | 07/97 ▸ 08/00 | 125366 | |
| 1.4 i N2K/FXB/FXF | E | 1360 | TU3JP | M | + | | 03/98 ▸ 08/00 | 125354 | |
| 1.4 i N2KFXB, N0K/FXF/FXG | E | 1360 | TU3JP | M | - | | 01/98 ▸ 08/00 | 125363 | **698444** |
| 1.4 i N0K/FXB/FXF, N2KFXF, N1K/FXB/FXF/FXG ▸ 8091 | E | 1360 | TU3JP | M | + | | 07/97 ▸ 01/99 | 125363 | **698444** |
| 1.6 i N1NFZF, N2NFZF, N0N/FZF | E | 1587 | TU5JP | M | + | | 07/97 ▸ 08/00 | 125366 | |
| 1.6 i N2NFZF | E | 1587 | TU5JP | M | + | | 03/98 ▸ 08/00 | 125354 | |
| 1.6 i N1NFZG | E | 1587 | TU5JP | M | - | | 05/98 ▸ 08/00 | 125363 | **698444** |
| 1.6 i N1NFZF, N2NFZF, N0N/FZF ▸ 8091 | E | 1587 | TU5JP | M | + | | 07/97 ▸ 01/99 | 125363 | **698444** |
| 1.8 i,1.8 i 16V N0L/FXF/FYF, N1L/FXF<br>1.8 i GPL 16V FYF/FZU, N6LFYF, N2L FXF/FYF | E | 1761 | XU7JB,XU7JP,XU7JP4 | M | + | | 07/97 ▸ 08/00 | 125366 | |
| 1.8 i,1.8 i 16V N0L/FXF/FYF, N1L/FXF<br>1.8 i GPL 16V FYF/FZU, N6LFYF, N2L FXF/FYF | E | 1761 | XU7JB,XU7JP,XU7JP4 | M | - | | 07/97 ▸ 08/00 | 125363 | **698444** |
| 1.8 i N1LFZM, N2LFZM, N0L/FZM | E | 1761 | XU7JP | A | + | | 07/97 ▸ 08/00 | 125366 | |
| 1.8 i N1LFZM, N2LFZM, N0L/FZM | E | 1761 | XU7JP | A | - | | 07/97 ▸ 08/00 | 125364 | |
| 2.0 i 16V N6RFSF | E | 1998 | XU10J4RS | M | + | | 01/98 ▸ 08/00 | 125366 | |
| 2.0 i 16V N6RFSF | E | 1998 | XU10J4RS | M | - | | 01/98 ▸ 08/00 | 125363 | **698444** |
| 2.0 i 16V N1RFVM, N2RFVM | E | 1998 | XU10J4R | A | +/- | | 06/98 ▸ 08/00 | 125366 | |
| 1.5 D N1VJZF, N2VJZF | D | 1527 | TUD5 | M | - | | 03/98 ▸ 08/00 | 1250E9 | |
| 1.8 D N0A9AF | D | 1769 | XUD7 | M | + | | 07/98 ▸ 08/00 | 1250F1 | |
| 1.8 D N0A9AF, N2A9AF | D | 1769 | XUD7 | M | - | | 03/98 ▸ 08/00 | 1250E9 | |
| 1.9 D N0WJZF | D | 1868 | DW8 | M | + | | 09/98 ▸ 08/00 | 1250E9 | |
| 1.9 D N1WJZF, N2WJZF, N3WJZF, N0W/JZF | D | 1868 | DW8 | M | + | | 09/98 ▸ 08/00 | 1250F0 | **698375** |
| 1.9 D N1WJZF, N2WJZF, N3WJZF, N0W/JZF ▸ 8091 | D | 1868 | DW8 | M | - | | 09/98 ▸ 01/99 | 1250E9 | |
| 1.9 D,1.9 TD N2DHYF, N1D/HYF/JYF | D | 1905 | XUD9A,XUD9TE | M | + | | 07/97 ▸ 08/00 | 1250F1 | |
| 1.9 D,1.9 SD,1.9 TD N0D/HYF/JYF, N1D/HYF JYF, N6DHYF, N2D/HVB/HWF/HYF/JYF | D | 1905 | XUD9A,XUD9BSD,XUD9SD,XUD9TE | M | + | | 07/97 ▸ 08/00 | 1250F0 | **698375** |
| 1.9 D,1.9 SD,1.9 TD N0D/HYF/JYF, N1D/HYF JYF, N6DHYF, N2D/HVB/HWF/HYF/JYF | D | 1905 | XUD9A,XUD9BSD,XUD9SD,XUD9TE | M | - | | 07/97 ▸ 08/00 | 1250E9 | |
| 1.9 TD N0DHYF, N6DHYF | D | 1905 | XUD9TE | M | - | | 01/98 ▸ 08/00 | 1250F1 | |
| **XSARA (2000>)** | | | | | | | | | |
| 1.4 i N1KFWB, N2KFWB, N0K/FWB | E | 1360 | TU3JP | M | | | 09/00 ▸ 07/05 | 1253A4 | **696177** |
| 1.6 i 16V N1NFUB, N2NFUB, N0N FUB | E | 1587 | TU5JP4 | M | | | 09/00 ▸ 08/05 | 1253A4 | **696177** |
| 1.6 i 16V N1NFUB, N2NFUB, N0N FUB | E | 1587 | TU5JP4 | M | | | 09/00 ▸ 08/05 | 1253A5 | **696177** |
| 1.6 i 16V N1NFUN, N2NFUB, N0N FUN | E | 1587 | TU5JP4 | A | | | 09/00 ▸ 08/05 | 1253A6 | **696177** |
| 1.6 i 16V N1NFUN, N2NFUB, N0N FUN | E | 1587 | TU5JP4 | A | | | 09/00 ▸ 08/05 | 1253A4 | **696177** |
| 1.6 i 16V N1NFUN, N2NFUB, N0N FUN | E | 1587 | TU5JP4 | A | | | 09/00 ▸ 08/05 | 1253A5 | **696177** |
| 2.0 i 16V N1RFNB, N2RFNB, N0R FNB | E | 1997 | EW10J4 | M | | | 09/00 ▸ 08/05 | 1253A5 | **696177** |
| 2.0 i 16V N1RFNB, N2RFNB, N0R FNB | E | 1997 | EW10J4 | M | | | 09/00 ▸ 08/05 | 1253A4 | **696177** |
| 2.0 i 16V N1RFNN, N2RFNN, N0R FNN | E | 1997 | EW10J4 | A | | | 09/00 ▸ 08/05 | 1253A4 | **696177** |

# CITROEN (.../...)

## XSARA (2000>) (.../...)

| | | | CC | | | AC | | | OE | Valeo | |
|---|---|---|---|---|---|---|---|---|---|---|---|
| 2.0 i 16V | N1RFNN, N2RFNN, N0RFNN | E | 1997 | EW10J4 | A | | | 09/00 ▸ 08/05 | 1253A5 | **696177** | |
| 1.4 HDi | N18HZB, N28HZB, N08HZB | D | 1398 | DV4TD | M | + | | 01/03 ▸ 08/05 | 1253A4 | **696177** | |
| 1.4 HDi | N18HZB, N28HZB, N08HZB | D | 1398 | DV4TD | M | - | | 01/03 ▸ 08/05 | 1253A6 | **696177** | |
| 1.9 D | N1WJYB, N2WJYB, N0W/JYB | D | 1868 | DW8B | M | + | | 04/01 ▸ 08/05 | 1253A4 | **696177** | |
| 1.9 D | N1WJYB, N2WJYB, N0W/JYB | D | 1868 | DW8B | M | - | | 04/01 ▸ 08/05 | 1253A6 | **696177** | |
| 1.9 D | N1WJYB, N2WJYB, N0W/JYB | D | 1868 | DW8B | M | | | 09/00 ▸ 08/05 | 1253A4 | **696177** | |
| 1.9 D | N1WJYB, N2WJYB, N0W/JYB | D | 1868 | DW8B | M | | | 09/00 ▸ 08/05 | 1253A6 | **696177** | |
| 2.0 HDi | N0R/HYB/HZB, N1R/HYBHZB, N2R/HYB/HZB | D | 1997 | DW10ATED,DW10TD | M | | | 09/00 ▸ 08/05 | 1253A5 | **696177** | |
| 2.0 HDi | N0R/HYB/HZB, N1R/HYBHZB, N2R/HYB/HZB | D | 1997 | DW10ATED,DW10TD | M | | | 09/00 ▸ 08/05 | 1253A6 | **696177** | |
| 2.0 HDi | N0R/HYB/HZB, N1R/HYBHZB, N2R/HYB/HZB | D | 1997 | DW10ATED,DW10TD | M | | | 09/00 ▸ 08/05 | 1253A4 | **696177** | |
| 2.0 HDi | N1RHZN, N2RHZN, N0RHZN | D | 1997 | DW10ATED | A | | | 08/01 ▸ 08/05 | 1253A6 | **696177** | |
| 2.0 HDi | N1RHZN, N2RHZN, N0RHZN | D | 1997 | DW10ATED | A | | | 08/01 ▸ 08/05 | 1253A5 | **696177** | |
| 2.0 HDi | N1RHZN, N2RHZN, N0RHZN | D | 1997 | DW10ATED | A | | | 08/01 ▸ 08/05 | 1253A4 | **696177** | |

## XSARA PICASSO

| | | | | | | | | | | | |
|---|---|---|---|---|---|---|---|---|---|---|---|
| 1.6 i | CHNFZA | E | 1587 | TU5JP | M | + | | 12/99 ▸ 10/02 | 125395 | **696136** | |
| 1.6 i,1.6 i 16V | CHN/FU/FVB | E | 1587 | TU5JP,TU5JP4 | M | + | | 01/02 ▸ | 1250F8 | **696138** | |
| 1.6 i | CHNFVB | E | 1587 | TU5JP | M | + | | 01/02 ▸ | 1253C8 | **696137** | |
| 1.6 i,1.6 i 16V | CHN/FU/FVB/FZA | E | 1587 | TU5JP,TU5JP4 | M | - | | 12/99 ▸ | 125396 | **696134** | |
| 1.8 i 16V | CH6/FZB/FZC | E | 1749 | EW7J4 | M | + | | 12/99 ▸ 12/05 | 125390 | **696135** | |
| 1.8 i 16V | CH6/FZB/FZC | E | 1749 | EW7J4 | M | + | | 12/99 ▸ 12/05 | 1250F8 | **696138** | |
| 1.8 i 16V | CH6/FZB/FZC | E | 1749 | EW7J4 | M | + | | 12/99 ▸ 12/05 | 125395 | **696136** | |
| 1.8 i 16V | CH6/FZB/FZC | E | 1749 | EW7J4 | M | + | | 12/99 ▸ 12/05 | 1253C8 | **696137** | |
| 1.8 i 16V | CH6/FZB/FZC | E | 1749 | EW7J4 | M | - | | 12/99 ▸ 12/05 | 125396 | **696134** | |
| 2.0 i 16V | CHRFNE | E | 1997 | EW10J4 | A | + | | 01/03 ▸ 12/05 | 1250F8 | **696138** | |
| 2.0 i 16V | CHRFNE | E | 1997 | EW10J4 | A | + | | 01/03 ▸ 12/05 | 1253C8 | **696137** | |
| 2.0 i 16V | CHRFNE | E | 1997 | EW10J4 | A | + | | 01/03 ▸ 12/05 | 125395 | **696136** | |
| 1.6 HDi 16V | CH9HXC | D | 1560 | DV6ATED4 | M | +/- | | 01/06 ▸ 05/07 | 1253C8 | **696137** | |
| 1.6 HDi 16V | CH9/HYB/HZC | D | 1560 | DV6TED4 | M | + | | 03/04 ▸ 05/07 | 1253C8 | **696137** | |
| 2.0 HDi | CHR/HYA/HYB | D | 1997 | DW10TD | M | +/- | | 02/03 ▸ 12/05 | 1253C8 | **696137** | |
| 9583 ▸ | | | | | | | | | | | |
| 2.0 HDi | CHR/HYA/HYB | D | 1997 | DW10TD | M | + | | 12/99 ▸ 12/05 | 1250F8 | **696138** | |
| 2.0 HDi | CHR/HYA/HYB | D | 1997 | DW10TD | M | - | | 12/99 ▸ 02/03 | 125395 | **696136** | |

## ZX

| | | | | | | | | | | | |
|---|---|---|---|---|---|---|---|---|---|---|---|
| 1.1 i | N2A/3/4/4/T, N2L/2/2/T/3 | E | 1124 | TU1M,TU1M+ | M | +/- | | 09/92 ▸ 07/98 | 125364 | | |
| 1.1 | N2A1, N2C9 | E | 1124 | TU1 | M | + | | 03/91 ▸ 06/96 | 125364 | | |
| 1.4 i | N2B1, N2A/9, N2L/7/9 | E | 1360 | TU3JP,TU3M,TU3MC | M | +/- | | 03/91 ▸ 07/98 | 125364 | | |
| 1.4,1.4 i | N2D7, N2A/7, N2M1N2E/1/T/9 | E | 1360 | TU3.2,TU3JP,TU3MC | M | + | | 03/91 ▸ 07/98 | 125364 | | |
| 1.6 i | N2B/2/4/5, N2G/1/2 | E | 1580 | XU5JP,XU5M,XU5M2 | M | +/- | | 03/91 ▸ 07/98 | 125364 | | |
| 1.6 i | N2B4A, N2G1A | E | 1580 | XU5JP,XU5M | A | +/- | | 09/92 ▸ 06/97 | 125364 | | |
| 1.8 i,1.8 i 16V | N2F2, N2E/4, N2K/5/79 | E | 1761 | XU7JP,XU7JP4 | M | +/- | | 09/92 ▸ 07/98 | 125364 | | |
| 1.8 i | N2H4, N2E/3A/4A | E | 1761 | XU7JP | A | +/- | | 09/92 ▸ 07/98 | 125364 | | |
| 1.9 i | N2B/6/8 | E | 1905 | XU9JA | M | +/- | | 03/91 ▸ 08/92 | 125364 | | |
| 1.9 i | N2B8A | E | 1905 | XU9JA | A | +/- | | 09/92 ▸ 08/93 | 125364 | | |
| 2.0 i,2.0 i 16V | N2F1, N2J9, N2L1N2E/6/7 | E | 1998 | XU10J2C,XU10J4,XU10J4RS | M | +/- | | 09/92 ▸ 07/98 | 125364 | | |
| 2.0 i | N2J3 | E | 1998 | XU10J2C | A | +/- | | 09/92 ▸ 07/98 | 125364 | | |
| 1.5 D | N2M3 | D | 1527 | TUD5 | M | +/- | | 07/94 ▸ 07/98 | 125363 | **698444** | |
| 1.8 D | N2C2/T | D | 1769 | XUD7 | M | - | | 09/92 ▸ 01/97 | 125363 | **698444** | |
| 1.8 D | N2C2/T | D | 1769 | XUD7 | M | - | | 01/97 ▸ 07/98 | 125364 | | |
| 1.9 D,1.9 TD | N2C/7/8, N2H8/T, N2D5/5/T, N2J/1/1/T | D | 1905 | XUD9A,XUD9TE | M | +/- | | 01/97 ▸ 07/98 | 125364 | | |
| 1.9 D,1.9 TD | N2D8, N2E9, N2F5N2H8, N2C/3/7 | D | 1905 | XUD9,XUD9A,XUD9TE | M | + | | 07/92 ▸ 07/98 | 125364 | | |
| 1.9 D,1.9 TD | N2C/3/4/4/T/6/7/8N2E9, N2D/5/5/T/8/9, N2F/4/5, N2J1, N2H/8/9 | D | 1905 | XUD9,XUD9A,XUD9TE | M | - | | 07/92 ▸ 01/97 | 125363 | **698444** | |
| 1.9 D,1.9 TD | N2D9, N2C/4/4/T/6/8N2H9, N2F/4/5 | D | 1905 | XUD9,XUD9A,XUD9TE | M | - | | 01/97 ▸ 07/98 | 125364 | | |

Fan Motor + Blades Moteur + hélice Lüftermotor + Lüfterrad Motorino + Ventola Ventilatormotor Fan motoru + Kanatlar
Moto-ventilador + Aspas Мотор вентилятора + лопасти вентилятора Ventilátor motor és lapát Motor sahary + vrtule Ventilator motor + Lame Μοτέρ ανεμιστήρων + Πτερωτές



• **New** Nouveau **Nuevo** Novo **Nuovo** Nieuw **Neu** Nowość **Yeni** Новый Νέο **Novy**

| | | | | | | | | | | | |
|---|---|---|---|---|---|---|---|---|---|---|---|
| | | | CC | | | AC | | | OE | Valeo | |
| **CITROEN (.../...)** | | | | | | | | | | | |
| **ZX (.../...)** | | | | | | | | | | | |
| 1.9 D | N2L5 | D | 1905 | XUD9A | A | +/- | | 07/97 ▸ 07/98 | 125364 | | |
| 1.9 D | N2C3A, N2H5 | D | 1905 | XUD9A | A | + | | 09/92 ▸ 07/98 | 125364 | | |
| 1.9 D | N2C3A, N2H5 | D | 1905 | XUD9A | A | - | | 09/92 ▸ 01/97 | 125363 | **698444** | |
| **CITROEN** | | | | | | | | | | | |
| **BERLINGO (96>2002)** | | | | | | | | | | | |
| 1.4 i GPL | MFKFXF | F | 1360 | TU3JP | M | - | | 01/00 ▸ 12/02 | 125363 | **698444** | |
| 1.1 i | MBHFXW, MFHFXB, MAH/KXB | E | 1124 | TU1JP | M | - | | 01/01 ▸ 12/02 | 125363 | **698444** | |
| 1.4,1.4 i | MCKFXF, MBK/5AG/FXF MFK/5AG/FXB/FXF | E | 1360 | TU3.2,TU3JP | M | + | | 07/96 ▸ 06/98 | 125364 | | |
| 1.4,1.4 i | MBK/5AG/6CG/FWB/FXF MCK/FWB/FXF, MFK/6CG/FWB/FXB/FXF | E | 1360 | TU3.2,TU3JP | M | - | | 07/96 ▸ 12/02 | 125363 | **698444** | |
| 1.4 7874 ▸ 8091 | MFK5AG | E | 1360 | TU3.2 | M | + | | 06/98 ▸ 01/99 | 125363 | **698444** | |
| 1.6 i 16V | MFN/FUB/FUF | E | 1587 | TU5JP4 | M | - | | 12/00 ▸ 12/02 | 125363 | **698444** | |
| 1.8 i | MFLFXF | E | 1761 | XU7JB | M | + | | 07/97 ▸ 06/98 | 125364 | | |
| 1.8 i | MFLFXF | E | 1761 | XU7JB | M | - | | 06/98 ▸ 01/99 | 125363 | **698444** | |
| 1.8 D | MBA/9AE/PAG, MEA9AE, MFA9AE, MCA/9AE/9AG | D | 1769 | XUD7 | M | + | | 07/96 ▸ 12/02 | 1250F1 | | |
| 1.8 D | MBA/9AE/PAG, MEA9AE, MFA9AE, MCA/9AE/9AG | D | 1769 | XUD7 | M | - | | 07/96 ▸ 12/02 | 1250E9 | | |
| 1.9 D | MBW/JYB/JYP/JZC/JZF, MEWJZF, MCW/JYB/JZF MFW/JYB/JZF | D | 1868 | DW8,DW8B | M | + | | 07/98 ▸ 12/02 | 1250F0 | **698375** | |
| 1.9 D | MBW/JYB/JYP/JZC/JZF, MEWJZF, MCW/JYB/JZF MFW/JYB/JZF | D | 1868 | DW8,DW8B | M | - | | 07/98 ▸ 12/02 | 1250E9 | | |
| 1.9 D | MCD9BE, MED9BE, MBD/9BE, MFD/9BE/JYF | D | 1905 | XUD9A | M | + | | 07/96 ▸ 12/02 | 1250F1 | | |
| 1.9 D | MCD9BE, MED9BE, MBD/9BE, MFD/9BE/JYF | D | 1905 | XUD9A | M | - | | 07/96 ▸ 12/02 | 1250E9 | | |
| 2.0 HDi | MBR/HYB, MCR/HYB/HYF MFR/HYB/HYF | D | 1997 | DW10TD | M | + | | 10/99 ▸ 12/02 | 1250F0 | **698375** | |
| 2.0 HDi | MBR/HYB, MCR/HYB/HYF MFR/HYB/HYF | D | 1997 | DW10TD | M | - | | 10/99 ▸ 12/02 | 1250E9 | | |
| **BERLINGO (2002>)** | | | | | | | | | | | |
| 1.4 i GNV,1.4 i GPL | GCKFWB, GJKFWB, GBK FWB | F | 1360 | TU3JP | M | + | | 04/03 ▸ 05/08 | 1253A6 | **696177** | |
| 1.4 i GNV,1.4 i GPL | GCKFWB, GJKFWB, GBK FWB | F | 1360 | TU3JP | M | + | | 04/03 ▸ 05/08 | 1253C8 | **696137** | |
| 1.1 i | GBHFXB | E | 1124 | TU1JP | M | + | | 12/02 ▸ 08/05 | 1253C8 | **696137** | |
| 1.1 i | GBHFXB | E | 1124 | TU1JP | M | + | | 12/02 ▸ 08/05 | 1253A6 | **696177** | |
| 1.4 i | GBK/FVC/FWB, GJK/FVC/FWB | E | 1360 | TU3A,TU3JP | M | + | | 12/02 ▸ | 1253C8 | **696137** | |
| 1.4 i | GBK/FVC/FWB, GJK/FVC/FWB | E | 1360 | TU3A,TU3JP | M | + | | 12/02 ▸ | 1253A6 | **696177** | |
| 1.6 i 16V | GCNFUB, GJNFUB, GBN FUB | E | 1587 | TU5JP4 | M | + | | 12/02 ▸ 05/08 | 1253A6 | **696177** | |
| 1.6 i 16V | GCNFUB, GJNFUB, GBN FUB | E | 1587 | TU5JP4 | M | + | | 12/02 ▸ 05/08 | 1253C8 | **696137** | |
| 1.6 HDi 16V | GB9/HWC/HXC, GC9/HW HXC, GJ9/HW/HXC | D | 1560 | DV6ATED4,DV6BTED4 | M | +/- | | 01/06 ▸ 05/08 | 1253C8 | **696137** | |
| 1.6 HDi 16V | GB9/HWC/HXC, GC9/HW HXC, GJ9/HW/HXC | D | 1560 | DV6ATED4,DV6BTED4 | M | + | | 01/06 ▸ 05/08 | 1253A6 | **696177** | |
| 1.9 D | GCWJYB, GEWJYB, GJWJYB, GBW/JYB | D | 1868 | DW8B | M | +/- | | 12/02 ▸ 05/08 | 1253C8 | **696137** | |
| 1.9 D | GCWJYB, GEWJYB, GJWJYB, GBW/JYB | D | 1868 | DW8B | M | + | | 12/02 ▸ 05/08 | 1253A6 | **696177** | |
| 2.0 HDi | GCRHYB, GERHYB, GBR HYB, GJR/HYB/HYK | D | 1997 | DW10TD | M | +/- | | 12/02 ▸ 05/08 | 1253C8 | **696137** | |
| 2.0 HDi | GCRHYB, GERHYB, GBR HYB, GJR/HYB/HYK | D | 1997 | DW10TD | M | + | | 12/02 ▸ 05/08 | 1253A6 | **696177** | |
| **DISPATCH (95>2003)** | | | | | | | | | | | |
| 2.0 HDi | BBRHZA, BERHXA BHRHZB, BYRHXA, BZRHXA, BAR/HXA/HZA | D | 1997 | DW10ATED,DW10BTED,DW10CTED | M | + | C | 09/00 ▸ 12/03 | 1253F1 | **698542** | |
| **DISPATCH (2004>2006)** | | | | | | | | | | | |
| 2.0 HDi | | D | 1997 | DW10BTED,DW10BTED+L4 | M | + | | 01/04 ▸ 12/06 | 1253C8 | **696137** | |
| 2.0 HDi | | D | 1997 | DW10BTED,DW10BTED+L4 | M | - | C | 01/04 ▸ 12/06 | 1253F1 | **698542** | |
| **DISPATCH (2007>)** | | | | | | | | | | | |
| 2.0 i 16V | XERFJC | E | 1997 | EW10A | M | +/- | | 03/07 ▸ | 1253K1 | **696132** | |
| 1.6 HDi 16V | XS9HUC, XT9HUC XU9HUC, XV9HUC, XW9HUC, XC9/HUC | D | 1560 | DV6UTED4 | M | +/- | | 01/07 ▸ | 1253K1 | **696132** | |

| Type Ctr. | | CC | | | AC | | 2+3 | OE | Valeo | |
|---|---|---|---|---|---|---|---|---|---|---|
| **CITROEN (.../...)** | | | | | | | | | | |
| **DISPATCH (2007>) (.../...)** | | | | | | | | | | |
| 2.0 HDi 16V XAR/HKH/HRH, XCR/HKH HRH, XSRHKH, XDR/HKH/HRH, XURHKH, XVRHKH XWRHKH, XTR/HKH/HRH | D | 1997 | DW10BTED4,DW10UTED4 | M | +/- | Right/Droite | 01/07 ▸ | 1250G7 | **696142** | |
| 2.0 HDi 16V XAR/HKH/HRH, XCR/HKH HRH, XSRHKH, XDR/HKH/HRH, XURHKH, XVRHKH XWRHKH, XTR/HKH/HRH | D | 1997 | DW10BTED4,DW10UTED4 | M | +/- | | 01/07 ▸ | 1253K1 | **696132** | |
| 2.0 HDi 16V XAR/HKH/HRH, XCR/HKH HRH, XSRHKH, XDR/HKH/HRH, XURHKH, XVRHKH XWRHKH, XTR/HKH/HRH | D | 1997 | DW10BTED4,DW10UTED4 | M | +/- | Right/Droite | 01/07 ▸ | 1253P7 | **696142** | |
| **JUMPER (2002>2006)** | | | | | | | | | | |
| 2.0 i ZAT/MF, ZBT/MF/MP, ZCT/MF/MM | E | 1998 | XU10J2U | M | | | 01/02 ▸ | 1250F1 | | |
| **JUMPY (95>2003)** | | | | | | | | | | |
| 2.0 HDi,2.0 HDi 16V BBRHZA, BCRHZB, BAR HWB/HXA/HZA/HZB, BDR/HXB/HZA/HZB, BER/HXA HZA/HZB, BTRHWB, BURHZB, BWRHZB, BSR/HXA/HXB HZB, BYR/HXA/HXB/HZB, BZR/HWB/HXA/HXB | D | 1997 | DW10ATED,DW10ATED4,DW10BTED DW10CTED | M | +/- | | 09/00 ▸ 12/03 | 1253F1 | **698542** | |
| **JUMPY (2004>2006)** | | | | | | | | | | |
| 2.0 HDi,2.0 HDi 16V BBR/HXB/HZB, BER/HXB HZB, BURHZB, BSR/HXB/HZB, BWR/HXB/HZB BZRHWB, BYR/HWB/HXB/HZB | D | 1997 | DW10ATED4,DW10BTED DW10BTED+L4 | M | - | C | 01/04 ▸ 12/06 | 1253F1 | **698542** | |
| **JUMPY (2007>)** | | | | | | | | | | |
| 2.0 i 16V XERFJC | E | 1997 | EW10A | M | +/- | | 03/07 ▸ | 1253K1 | **696132** | |
| 1.6 HDi 16V XC9HUC, XS9HUC XT9HUC, XU9HUC, XV9HUC, XW9HUC, XA9/HUC | D | 1560 | DV6UTED4 | M | +/- | | 01/07 ▸ | 1253K1 | **696132** | |
| 1.6 HDi 16V XC9HUC, XS9HUC XT9HUC, XU9HUC, XV9HUC, XW9HUC, XA9/HUC ▸ 11318 | D | 1560 | DV6UTED4 | M | +/- | | 01/07 ▸ | 1253P7 | **696142** | |
| 1.6 HDi 16V XC9HUC, XS9HUC XT9HUC, XU9HUC, XV9HUC, XW9HUC, XA9/HUC ▸ 11318 | D | 1560 | DV6UTED4 | M | +/- | | 01/07 ▸ 11/07 | 1253G7 | **696091** | |
| 1.6 HDi 16V XC9HUC, XS9HUC XT9HUC, XU9HUC, XV9HUC, XW9HUC, XA9/HUC ▸ 11318 | D | 1560 | DV6UTED4 | M | +/- | | 01/07 ▸ 11/07 | 1253K2 | **696091** | |
| 2.0 HDi 16V XAR/HKH/HRH, XCR/HKH HRH, XSRHKH, XDR/HKH/HRH, XURHKH, XVRHKH XWRHKH, XTR/HKH/HRH | D | 1997 | DW10BTED4,DW10UTED4 | M | +/- | | 01/07 ▸ | 1250G7 | **696142** | |
| 2.0 HDi 16V XAR/HKH/HRH, XCR/HKH HRH, XSRHKH, XDR/HKH/HRH, XURHKH, XVRHKH XWRHKH, XTR/HKH/HRH | D | 1997 | DW10BTED4,DW10UTED4 | M | +/- | | 01/07 ▸ | 1253K1 | **696132** | |
| 2.0 HDi 16V XAR/HKH/HRH, XCR/HKH HRH, XSRHKH, XDR/HKH/HRH, XURHKH, XVRHKH XWRHKH, XTR/HKH/HRH | D | 1997 | DW10BTED4,DW10UTED4 | M | +/- | | 01/07 ▸ | 1253P7 | **696142** | |
| 2.0 HDi 16V XSR/HKH, XURHKH XVRHKH, XWRHKH, XTR/HKH/HRH | D | 1997 | DW10BTED4,DW10UTED4 | M | | | 01/07 ▸ | 1253K2 | **696091** | |
| 2.0 HDi 16V XSR/HKH, XURHKH XVRHKH, XWRHKH, XTR/HKH/HRH | D | 1997 | DW10BTED4,DW10UTED4 | M | | | 01/07 ▸ | 1253G7 | **696091** | |
| **FIAT** | | | | | | | | | | |
| **ULYSSE (2002>)** | | | | | | | | | | |
| 2.0 i 16V 179BXA1 | E | 1997 | EW10J4 | M | | | 09/02 ▸ 10/05 | 9635494380 | **696132** | |
| 2.0 i 16V 179BXA1 | E | 1997 | EW10J4 | M | | | 09/02 ▸ 10/05 | 9635466180 | **696139** | |
| 2.0 i 16V 179BXA1 | E | 1997 | EW10J4 | A | | | 09/02 ▸ 10/05 | 9635466180 | **696139** | |
| 2.0 i 16V 179BXA1 | E | 1997 | EW10J4 | A | | | 09/02 ▸ 10/05 | 9635494380 | **696132** | |
| 3.0 i V6 24V 179AXD1 | E | 2946 | ES9J4S | A | +/- | Right/Droite | 09/02 ▸ 09/05 | 1400821280 | **696132** | |
| 3.0 i V6 24V 179AXD1 | E | 2946 | ES9J4S | A | | | 09/02 ▸ 09/05 | 9635466180 | **696139** | |
| 2.0 JTD 16V 179/BXB1/CXB1 | D | 1997 | DW10ATED4,DW10UTED4 | M | +/- | Right/Droite | 09/02 ▸ 07/10 | 1400821280 | **696132** | |
| 2.0 JTD 16V 179BXF1 | D | 1997 | DW10ATED4 | A | +/- | Right/Droite | 03/03 ▸ 10/06 | 1400821280 | **696132** | |
| 2.2 JTD 16V 179/BXC1/CXC1 | D | 2179 | DW12ATED4/L4 | M | +/- | Right/Droite | 09/02 ▸ 06/06 | 1400821280 | **696132** | |
| **FIAT** | | | | | | | | | | |
| **SCUDO (2007>)** | | | | | | | | | | |
| 1.6 Mj 16V 272 | D | 1560 | DV6UTED4 | M | | | 01/07 ▸ | 1400821280 | **696132** | |

Fan Motor + Blades Moteur + hélice Lüftermotor + Lüfterrad Motorino + Ventola Ventilatormotor Fan motoru + Kanatlar
Moto-ventilador + Aspas Мотор вентилятора + лопасти вентилятора Ventilátor motor és lapát Motor sahary + vrtule Ventilator motor + Lame Μοτέρ ανεμιστήρων + Πτερωτές



• **New** Nouveau **Nuevo** Novo **Nuovo** Nieuw **Neu** Nowość **Yeni** Новый Νέο **Novy**

| Type Ctr. | | CC | | AC | | | | OE | Valeo | |
|---|---|---|---|---|---|---|---|---|---|---|
| **FIAT (.../...)** | | | | | | | | | | |
| **SCUDO (2007>) (.../...)** | | | | | | | | | | |
| 2.0 Mj 16V 272/XX/ZX | D | 1997 | DW10BTED4,DW10BTED4/F,DW10UTED4 | M | | Left/gauche | 01/07 ▸ | 1400821280 | **696132** | |
| **FORD** | | | | | | | | | | |
| **GALAXY (95>2000)** | | | | | | | | | | |
| 2.0 i WGRNSE | E | 1998 | NSE | M | + | | 05/95 ▸ 03/00 | 1011638 | **698155** | |
| 2.0 i WGRNSE | E | 1998 | NSE | M | - | | 05/95 ▸ 03/00 | 7223405 | **696041** | |
| 2.0 i WGRNSE | E | 1998 | NSE | A | + | | 05/95 ▸ 03/00 | 1011638 | **698155** | |
| 2.0 i WGRNSE | E | 1998 | NSE | A | - | | 05/95 ▸ 03/00 | 7223405 | **696041** | |
| 2.3 i 16V WGRY5 | E | 2295 | Y5 | M | + | | 01/97 ▸ 03/00 | 1011638 | **698155** | |
| 2.3 i 16V WGRY5 | E | 2295 | Y5 | A | + | | 01/97 ▸ 03/00 | 1011638 | **698155** | |
| 1.9 TDi WGR/1Z1/AFN | D | 1896 | 1.9N,1.9P | M | + | | 11/95 ▸ 03/00 | 1011638 | **698155** | |
| **LANCIA** | | | | | | | | | | |
| **PHEDRA** | | | | | | | | | | |
| 2.0 i 16V 179AXA1A | E | 1997 | EW10J4 | M | + | | 09/02 ▸ 2010 | 9635466180 | **696139** | |
| 2.0 i 16V 179AXA1A | E | 1997 | EW10J4 | M | + | | 09/02 ▸ 2010 | 9635494380 | **696132** | |
| 2.0 i 16V 179AXA11 | E | 1997 | EW10J4 | A | + | | 09/02 ▸ 2010 | 9635466180 | **696139** | |
| 2.0 i 16V 179AXA11 | E | 1997 | EW10J4 | A | + | | 09/02 ▸ 2010 | 9635494380 | **696132** | |
| 2.2 JTD 16V 179AXC1A | D | 2179 | DW12ATED4/L4 | M | + | | 09/02 ▸ 02/04 | 9635466180 | **696139** | |
| 2.2 JTD 16V 179AXC1A | D | 2179 | DW12ATED4/L4 | M | + | | 09/02 ▸ 02/04 | 9635494380 | **696132** | |
| **MERCEDES** | | | | | | | | | | |
| **M CLASS (163)** | | | | | | | | | | |
| ML230 i 163.136 | E | 2295 | 111.977 | M | | Left/gauche | 03/98 ▸ 05/00 | 1635400188 | | |
| ML230 i 163.136 | E | 2295 | 111.977 | M | | Right/Droite | 03/98 ▸ 05/00 | 1635400288 | | |
| ML320 i 163.154 | E | 3199 | 112.942 | A | | Left/gauche | 03/98 ▸ 08/02 | 1635400188 | | |
| ML320 i 163.154 | E | 3199 | 112.942 | A | | Right/Droite | 03/98 ▸ 08/02 | 1635400288 | | |
| ML350 i 163.157 | E | 3724 | 112.970 | A | + | | 09/00 ▸ 04/05 | 1635400288 | | |
| ML350 i 163.157 | E | 3724 | 112.970 | A | + | | 09/00 ▸ 04/05 | 1635400188 | | |
| ML430 i 163.172 | E | 4266 | 113.942 | A | | Left/gauche | 03/98 ▸ 05/01 | 1635400188 | | |
| ML430 i 163.172 | E | 4266 | 113.942 | A | | Right/Droite | 03/98 ▸ 05/01 | 1635400288 | | |
| ML55 i 163.174 | E | 5439 | 113.981 | A | | Left/gauche | 09/99 ▸ 08/04 | 1635400188 | | |
| ML55 i 163.174 | E | 5439 | 113.981 | A | | Right/Droite | 09/99 ▸ 08/04 | 1635400288 | | |
| **S CLASS (140)** | | | | | | | | | | |
| 300 140.028 006943 ▸ | E | 2799 | 104.944 | M | + | | ▸ 06/93 | 0015000593 | | |
| 300 140.028 006943 ▸ | E | 2799 | 104.944 | A | + | | ▸ 06/93 | 0015000593 | | |
| 300 140/.032/.033 006943 ▸ | E | 3199 | 104.990 | M | + | | ▸ 06/93 | 0015000593 | | |
| 300 140/.032/.033 006943 ▸ | E | 3199 | 104.990 | A | + | | ▸ 06/93 | 0015000593 | | |
| 400 140/.042/.043 006943 ▸ | E | 4196 | 119.971 | A | + | | ▸ 06/93 | 0015000593 | | |
| 500 i 140/.050/.051/.070 006943 ▸ | E | 4973 | 119.970 | A | + | | ▸ 06/93 | 0015000593 | | |
| 600,600 i 140/.056/.057/.076 006943 ▸ | E | 5987 | 120.980 | A | + | | ▸ 06/93 | 0015000593 | | |
| 300 TD 140.134 | D | 3449 | 603.971 | A | + | | 03/92 ▸ 06/93 | 0015000593 | | |
| **SL (129) (89>2001)** | | | | | | | | | | |
| 600 i,SL600 i 129.076 | E | 5987 | 120.981,120.983 | A | + | | 06/92 ▸ 07/01 | 0015000593 | | |
| **MERCEDES** | | | | | | | | | | |
| **SPRINTER II (2006>)** | | | | | | | | | | |
| 3.5 i 906/.113/.133/.135/.213/.233/.235/.613/.633 .635/.637/.713/.733/.735 | E | 3498 | 272.979 | M | + | | 02/06 ▸ | 9065000493 | **696083** | |
| 3.5 i 906/.613/.633/.635/.637/.713/.733/.735 | E | 3498 | 272.979 | M | + | | 02/06 ▸ | 9065000393 | **696082** | |
| 3.5 i 906/.613/.633/.635/.637/.713/.733/.735 | E | 3498 | 272.979 | A | + | | 02/06 ▸ | 9065000393 | **696082** | |
| 3.5 i 906/.113/.133/.135/.213/.233/.235/.613/.633 .635/.637/.713/.733/.735 | E | 3498 | 272.979 | A | + | | 02/06 ▸ | 9065000493 | **696083** | |

# MERCEDES (.../...)

## SPRINTER II (2006>) (.../...)

| | | | | | | | | | | |
|---|---|---|---|---|---|---|---|---|---|---|
| 2.2 D | 906/.611/.613/.631/.633/.635/.637/.653/.655 .657/.711/.713/.731/.733/.735 | D | 2148 | 646,646.984,646.DE22LA | M | + | | 02/06 ▸ | 9065000393 | **696082** |
| 2.2 D | 906/.111/.113/.131/.133/.135/.153/.155/.211 .213/.231/.233/.235/.253/.255/.611/.613/.631 .633/.635/.637/.653/.655/.657/.711/.713/.731 .733/.735 | D | 2148 | 646,646.984,646.DE22LA | M | + | | 02/06 ▸ | 9065000493 | **696083** |
| 2.2 D | 906/.611/.613/.631/.633/.635/.637/.653/.655 .657/.711/.713/.731/.733/.735 | D | 2148 | 646,646.984,646.DE22LA | A | + | | 02/06 ▸ | 9065000393 | **696082** |
| 2.2 D | 906/.111/.113/.131/.133/.135/.153/.155/.211 .213/.231/.233/.235/.253/.255/.611/.613/.631 .633/.635/.637/.653/.655/.657/.711/.713/.731 .733/.735 | D | 2148 | 646,646.984,646.DE22LA | A | + | | 02/06 ▸ | 9065000493 | **696083** |
| 3.0 D V6 24V | 906/.611/.613/.631 .633/.635/.637/.653/.655/.657/.711/.713 | D | 2987 | 642.992 | M | + | | 02/06 ▸ | 9065000393 | **696082** |
| 3.0 D V6 24V | 906/.111/.113/.131 .133/.135/.153/.155/.211/.213/.231/.233/.235 .253/.255/.611/.613/.631/.633/.635/.637/.653 .655/.657/.711/.713 | D | 2987 | 642.992 | M | + | | 02/06 ▸ | 9065000493 | **696083** |
| 3.0 D 24V,3.0 D V6 24V | 906/.111/.113/.131 .133/.135/.153/.155/.211/.213/.231/.233/.235 .253/.255/.611/.613/.631/.633/.635/.637/.653 .655/.657/.711/.713 | D | 2987 | 642.992 | A | + | | 02/06 ▸ | 9065000493 | **696083** |
| 3.0 D V6 24V | 906/.611/.613/.631 .633/.635/.637/.653/.655/.657/.711/.713 | D | 2987 | 642.992 | A | + | | 02/06 ▸ | 9065000393 | **696082** |

# OPEL

## ASTRA F (91>98)

| | | | | | | | | | | |
|---|---|---|---|---|---|---|---|---|---|---|
| 1.4,1.4 i,1.4 i 16V | TA1/308/319/368, TA3 240/246, TA4/306/308/319/368/408/419/435/468 TAC/408/419/468, TAK/136/436 | E | 1389 | 14NV,14SE,C14NZ,C14SE,X14NZ X14XE | M | - | | 09/91 ▸ 02/01 | 1341244 | **696035** |
| 1.4 i,1.4 i 16V | TA6/308/319/368 | E | 1389 | 14SE,C14SE,X14XE | A | - | | 09/91 ▸ 02/01 | 1341244 | **696035** |
| 1.6 i,1.6 i 16V | TAM/301/306/308/319 368, TAN/408/419/468 | E | 1598 | 16LZ2,C16NZ,C16SE,X16SZ X16SZR,X16XEL | M | - | | 09/91 ▸ 02/01 | 1341244 | **696035** |
| 1.6 i,1.6 i 16V | TAM/608/619/668, TAN 608/619/668 | E | 1598 | C16NZ,C16SE,X16SZ,X16SZR X16XEL | A | - | | 09/91 ▸ 02/01 | 1341244 | **696035** |
| 1.8 i | | E | 1796 | C18NZ | M | - | | 09/91 ▸ 08/94 | 1341244 | **696035** |
| 1.8 i | | E | 1796 | C18NZ | M | | | 09/91 ▸ 08/94 | 1341244 | **696035** |

## ASTRA G (98>2005)

| | | | | | | | | | | |
|---|---|---|---|---|---|---|---|---|---|---|
| 1.2 i 16V | | E | 1199 | X12XE | M | + | | 02/98 ▸ | 1341299 | **696173** |
| 1.2 i 16V | | E | 1199 | X12XE,Z12XE | M | + | | 02/98 ▸ 02/04 | 1341344 | **696173** |
| 1.4 i 16V | | E | 1389 | X14XE,Z14XE | M | +/- | | 02/98 ▸ 12/99 | 1341344 | **696173** |
| 1.4 i 16V | | E | 1389 | X14XE | M | +/- | | 02/98 ▸ | 1341299 | **696173** |
| 1.4 i 16V | | E | 1389 | X14XE | A | +/- | | 02/98 ▸ | 1341299 | **696173** |
| 1.4 i 16V | | E | 1389 | X14XE,Z14XE | A | +/- | | 02/98 ▸ 12/99 | 1341344 | **696173** |
| 1.6 i,1.6 i 16V | | E | 1598 | X16SZR,X16XEL | M | +/- | | 02/98 ▸ | 1341299 | **696173** |
| 1.6 i,1.6 i 16V | | E | 1598 | X16SZR,X16XEL,Z16SE/E4 | M | +/- | | 02/98 ▸ 12/02 | 1341344 | **696173** |
| 1.6 i 16V | | E | 1598 | Z16XE | M | | | 02/98 ▸ 12/99 | 1341344 | **696173** |
| 1.6 i,1.6 i 16V | | E | 1598 | X16SZR,X16XEL | A | +/- | | 02/98 ▸ | 1341299 | **696173** |
| 1.6 i,1.6 i 16V | | E | 1598 | X16SZR,X16XEL,Z16SE/E4 | A | +/- | | 02/98 ▸ 12/02 | 1341344 | **696173** |
| 1.6 i 16V | | E | 1598 | Z16XE | A | | | 02/98 ▸ 12/99 | 1341344 | **696173** |
| 1.8 i 16V | | E | 1796 | X18XE1 | M | +/- | | 02/98 ▸ | 1341299 | **696173** |
| 1.8 i 16V | | E | 1796 | X18XE1 | M | +/- | | 02/98 ▸ 09/00 | 1341344 | **696173** |
| 1.8 i 16V | 0BP07K | E | 1796 | Z18XE | M | + | | 02/00 ▸ 12/02 | 1341344 | **696173** |
| 1.8 i 16V | 0BP07K | E | 1796 | Z18XEL | M | - | C | 02/00 ▸ | 1341299 | **696173** |
| 1.8 i 16V | 0BP07K | E | 1796 | Z18XE,Z18XEL | M | - | C | 02/00 ▸ 12/05 | 1341344 | **696173** |
| 1.8 i 16V | | E | 1796 | X18XE1 | A | +/- | | 02/98 ▸ 02/04 | 1341344 | **696173** |
| 1.8 i 16V | | E | 1796 | X18XE1 | A | +/- | | 02/98 ▸ | 1341299 | **696173** |
| 1.8 i 16V | | E | 1796 | Z18XE | A | - | | 09/00 ▸ 02/04 | 1341344 | **696173** |
| 2.0 i Turbo 16V | | E | 1998 | Z20LET | M | +/- | | 03/01 ▸ 02/04 | 1341346 | **696280** |
| 2.0 i 16V,2.0 i Turbo 16V | | E | 1998 | X20XER,X20XEV,Z20LET | M | + | | 02/98 ▸ 09/02 | 1341346 | **696280** |
| 2.0 i 16V | | E | 1998 | X20XEV | M | - | | 02/98 ▸ 12/99 | 1341299 | **696173** |
| 2.0 i 16V | | E | 1998 | X20XEV | M | - | | 02/98 ▸ 12/99 | 1341344 | **696173** |
| 2.0 i 16V | | E | 1998 | X20XEV | A | + | | 02/98 ▸ 12/99 | 1341346 | **696280** |
| 2.0 i 16V | | E | 1998 | X20XEV | A | - | | 02/98 ▸ 12/99 | 1341344 | **696173** |
| 2.0 i 16V | | E | 1998 | X20XEV | A | - | | 02/98 ▸ 12/99 | 1341299 | **696173** |
| 2.2 i 16V | 0BP07P, BF67P1 | E | 2198 | Z22SE | M | + | | 10/99 ▸ 06/05 | 1341346 | **696280** |
| 2.2 i 16V | 0BP07P, BF67P1 | E | 2198 | Z22SE | M | - | | 10/99 ▸ 06/05 | 1341344 | **696173** |

Fan Motor + Blades Moteur + hélice Lüftermotor + Lüfterrad Motorino + Ventola Ventilatormotor Fan motoru + Kanatlar
Moto-ventilador + Aspas Мотор вентилятора + лопасти вентилятора Ventilátor motor és lapát Motor sahary + vrtule Ventilator motor + Lame Μοτέρ ανεμιστήρων + Πτερωτές



• **New** Nouveau **Nuevo** Novo **Nuovo** Nieuw **Neu** Nowość **Yeni** Новый Νέο **Nový**

# OPEL (.../...)

## ASTRA G (98>2005) (.../...)

| | | CC | | AC | | | | OE | Valeo |
|---|---|---|---|---|---|---|---|---|---|
| 2.2 i 16V 0BP07P | E | 2198 | Z22SE | M | - | C | 02/00 ▸ | 1341299 | 696173 |
| 2.2 i 16V 0BP07P, BF67P1 | E | 2198 | Z22SE | A | + | | 10/99 ▸ 12/05 | 1341346 | 696280 |
| 2.2 i 16V 0BP07P, BF67P1 | E | 2198 | Z22SE | A | - | | 10/99 ▸ 12/05 | 1341344 | 696173 |
| 2.2 i 16V 0BP07P | E | 2198 | Z22SE | A | - | C | 02/00 ▸ | 1341299 | 696173 |
| 1.7 CDTI TU35JF | D | 1686 | Z17DTL | M | + | | 04/03 ▸ 02/04 | 1341346 | 696280 |
| 1.7 DTi 16V | D | 1686 | Y17DT | M | | | 02/00 ▸ 02/04 | 1341346 | 696280 |
| 1.7 TD,1.7 TD Ecoturbo | D | 1699 | X17DTL | M | +/- | | 02/98 ▸ 08/00 | 1341346 | 696280 |
| 1.7 TD Ecoturbo | D | 1699 | X17DTL | M | | | 02/98 ▸ 08/00 | 1341346 | 696280 |
| 2.0 DTi 16V,2.0 Di 16V | D | 1995 | X20DTL,Y20DTH,Y20DTL | M | +/- | | 02/98 ▸ | 1341346 | 696280 |
| 2.0 DTi 16V,2.0 Di 16V | D | 1995 | X20DTL,Y20DTH,Y20DTL | A | +/- | | 02/98 ▸ 02/04 | 1341346 | 696280 |
| 2.2 DTI 16V | D | 2171 | Y22DTR | M | +/- | | 03/01 ▸ 12/05 | 1341346 | 696280 |

## ASTRA G (98>2002)

| | | | | | | | | | |
|---|---|---|---|---|---|---|---|---|---|
| 1.6 i 16V | E | 1598 | X16XEL | M | - | | 09/98 ▸ 12/02 | 1341244 | 696035 |

## CORSA A (82>93)

| | | | | | | | | | |
|---|---|---|---|---|---|---|---|---|---|
| 1.6 i S, SP308 ▸ N4000035, N4354664 | E | 1598 | C16NZ,E16SE | M | | | 03/88 ▸ 1992 | 1341244 | 696035 |
| 1.5 D SF4/08/19/68 | D | 1488 | 4EC1 | M | | | 09/87 ▸ 1993 | 1341219 | 696281 |

## CORSA B (93>2000)

| | | | | | | | | | |
|---|---|---|---|---|---|---|---|---|---|
| 1.2,1.2 i S93/CB1/DB1 | E | 1195 | 12NZ,X12SZ | M | - | | 03/93 ▸ 08/00 | 1341244 | 696035 |
| 1.2 i ▸ S4276216 | E | 1195 | C12NZ | M | +/- | | 03/93 ▸ 08/00 | 1341244 | 696035 |
| 1.4 i S93/CM1/DM1 | E | 1389 | C14NZ,X14SZ | M | +/- | | 03/93 ▸ 08/00 | 1341244 | 696035 |
| 1.4 i | E | 1389 | C14NZ,C14SE | M | - | | 03/93 ▸ 08/00 | 1341244 | 696035 |
| 1.4 i S93DM1 ▸ T4257028 | E | 1389 | X14SZ | A | +/- | | 1996 ▸ 08/00 | 1341244 | 696035 |
| 1.4 i | E | 1389 | C14NZ,X14SZ | A | - | | 09/93 ▸ 08/00 | 1341244 | 696035 |
| 1.4 i ▸ W4158793 | E | 1389 | C14SE | M | + | | 03/93 ▸ 08/00 | 1341219 | 696281 |
| 1.5 D | D | 1488 | 15D | M | +/- | | 03/93 ▸ 08/00 | 1341219 | 696281 |
| 1.7 D S93/CL1/DL1 | D | 1686 | X17D | M | +/- | | 03/93 ▸ 08/00 | 1341219 | 696281 |

## CORSA C (2000>2003)

| | | | | | | | | | |
|---|---|---|---|---|---|---|---|---|---|
| 1.0 i 12V 0AB/08C/68C ▸ 13999999, 14999999 | E | 973 | Z10XE | M | + | C | 09/00 ▸ | 1341331 | 696283 |
| 1.0 i 12V 0AB/08C/68C ▸ 13999999, 14999999 | E | 973 | Z10XE | M | + | C | 09/00 ▸ | 1341332 | •696367 |
| 1.2 i 16V 0AB/08E/68E, 0AE/08E 68E, 0AS/08E/68E | E | 1199 | Z12XE | M | - | C | 09/00 ▸ 08/03 | 1341352 | 696282 |
| 1.2 i 16V 0AB/08E/68E, 0AE/08E 68E, 0AS/08E/68E ▸ 16999999, 14999999 | E | 1199 | Z12XE | M | + | | 09/00 ▸ | 1341331 | 696283 |
| 1.2 i 16V 0AB/08E/68E, 0AE/08E 68E, 0AS/08E/68E ▸ 16999999, 14999999 | E | 1199 | Z12XE | M | + | | 09/00 ▸ | 1341332 | •696367 |
| 1.4 i 16V 0AE/08G/68G, 0AS/08G 68G | E | 1389 | Z14XE | M | + | C | 09/00 ▸ 08/03 | 1341331 | 696283 |
| 1.4 i 16V 0AE/08G/68G | E | 1389 | Z14XE | A | + | C | 09/00 ▸ 08/03 | 1341331 | 696283 |
| 1.4 i 16V 0AE/08G/68G | E | 1389 | Z14XE | A | - | C | 09/00 ▸ 08/03 | 1341334 | 696284 |
| 1.4 i 16V 0AE/08G/68G, 0AS/08G 68G | E | 1389 | Z14XE | M | + | C | 09/00 ▸ 08/03 | 1341332 | •696367 |
| 1.4 i 16V 0AE/08G/68G | E | 1389 | Z14XE | A | + | C | 09/00 ▸ 08/03 | 1341332 | •696367 |
| 1.8 i 16V 0AG08K, 0AE/08K, 0AS 08K/68K | E | 1796 | Z18XE | M | + | C | 09/00 ▸ 08/03 | 1341331 | 696283 |
| 1.8 i 16V 0AG08K, 0AE/08K, 0AS 08K/68K | E | 1796 | Z18XE | M | + | C | 09/00 ▸ 08/03 | 1341332 | •696367 |
| 1.7 DI 16V,1.7 DTi 16V 0AB/08J/68J, 0AE/08J 68J, 0AS/08J/68J | D | 1686 | Y17DT,Y17DTL | M | +/- | C | 09/00 ▸ 08/03 | 1341334 | 696284 |

## CORSA C (2003>)

| | | | | | | | | | |
|---|---|---|---|---|---|---|---|---|---|
| 1.2 i 16V AB68EE, AB0/8EE, AC0 8EB/8EE, AC6/8EB/8EE, AE0/8EB/8EE, AE6/8EB 8EE, AS0/8EB/8EE, AS6/8EB/8EE | E | 1199 | Z12XE | M | - | | 09/03 ▸ 08/04 | 1341352 | 696282 |
| 1.3 CDTI 16V AB68FA, AC08FA AC68FA, AE08FA, AE68FA, AS08FA, AS68FA, AB0 8FA | D | 1248 | Z13DT | M | +/- | | 09/03 ▸ 07/06 | 1341334 | 696284 |

| Type Ctr. | | CC | | AC | | | OE | Valeo |
|---|---|---|---|---|---|---|---|---|
| **OPEL (.../...)** | | | | | | | | |
| **CORSA C (2003>) (.../...)** | | | | | | | | |
| 1.7 CDTI 16V AE68JK, AS08JK AS68JK, AE0/8JK | D | 1686 | Z17DTH | M | +/- | | 09/03 ▸ 07/06 | 1341334 | **696284** |
| **SIGNUM** | | | | | | | | |
| 1.8 i 16V ONK48, ONU48 | E | 1796 | Z18XE | M | +/- | | 06/03 ▸ 09/05 | 1341362 | **698844** |
| 2.0 i Turbo 16V ONP48, ONS48, ONU48 ONK/48 | E | 1998 | Z20NET | M | +/- | Left/gauche | 06/03 ▸ 09/05 | 1341368 | **696026** |
| 2.0 i Turbo 16V ONP48, ONS48, ONU48 ONK/48 | E | 1998 | Z20NET | M | +/- | Right/Droite | 06/03 ▸ 09/05 | 1341365 | **696001** |
| 2.2 DIG 16V ONP48, ONS48, ONU48 ONK/48 | E | 2198 | Z22YH | M | +/- | | 06/03 ▸ 09/05 | 1341362 | **698844** |
| 2.2 DIG 16V ONP48, ONS48, ONU48 ONK/48 | E | 2198 | Z22YH | M | + | | 06/03 ▸ 09/05 | 1341365 | **696001** |
| 2.2 DIG 16V ONP48, ONS48, ONU48 ONK/48 | E | 2198 | Z22YH | M | + | | 06/03 ▸ 09/05 | 1341368 | **696026** |
| 2.2 DIG 16V ONP48, ONS48, ONU48 ONK/48 | E | 2198 | Z22YH | A | +/- | | 06/03 ▸ 09/05 | 1341362 | **698844** |
| 2.2 DIG 16V ONP48, ONS48, ONU48 ONK/48 | E | 2198 | Z22YH | A | + | | 06/03 ▸ 09/05 | 1341365 | **696001** |
| 2.2 DIG 16V ONP48, ONS48, ONU48 ONK/48 | E | 2198 | Z22YH | A | + | | 06/03 ▸ 09/05 | 1341368 | **696026** |
| 3.2 i V6 24V ONP48, ONS48, ONU48 ONK/48 | E | 3175 | Z32SE | M | +/- | | 06/03 ▸ 09/05 | 1341368 | **696026** |
| 3.2 i V6 24V ONP48, ONS48, ONU48 ONK/48 | E | 3175 | Z32SE | M | +/- | | 06/03 ▸ 09/05 | 1341365 | **696001** |
| 3.2 i V6 24V ONP48, ONS48, ONU48 ONK/48 | E | 3175 | Z32SE | A | +/- | | 06/03 ▸ 09/05 | 1341368 | **696026** |
| 3.2 i V6 24V ONP48, ONS48, ONU48 ONK/48 | E | 3175 | Z32SE | A | + | | 06/03 ▸ 09/05 | 1341369 | **696027** |
| 3.2 i V6 24V ONP48, ONS48, ONU48 ONK/48 | E | 3175 | Z32SE | A | - | | 06/03 ▸ 09/05 | 1341365 | **696001** |
| 1.9 CDTI | D | 1910 | Z19DT | M | +/- | Right/Droite | 04/04 ▸ 09/05 | 1341368 | **696026** |
| 1.9 CDTI 5100001 ▸ | D | 1910 | Z19DT | M | +/- | Left/gauche | 01/05 ▸ 09/05 | 1341365 | **696001** |
| 1.9 CDTI 16V | D | 1910 | Z19DTH | M | + | | 04/04 ▸ 09/05 | 1341383 | **696030** |
| 1.9 CDTI 16V | D | 1910 | Z19DTH | M | - | | 04/04 ▸ 09/05 | 1341368 | **696026** |
| 1.9 CDTI ▸ 4199999 | D | 1910 | Z19DT | M | +/- | Left/gauche | 04/04 ▸ 12/04 | 1341369 | **696027** |
| 2.0 DTi 16V ONK48, ONU48 | D | 1995 | Y20DTH | M | +/- | Right/Droite | 06/03 ▸ 09/05 | 1341368 | **696026** |
| 2.0 DTi 16V ONK48, ONU48 | D | 1995 | Y20DTH | M | +/- | Left/gauche | 06/03 ▸ 09/05 | 1341369 | **696027** |
| 2.2 DTI 16V ONP48, ONS48, ONU48 ONK/48 | D | 2171 | Y22DTR | M | +/- | Left/gauche | 06/03 ▸ 09/05 | 1341369 | **696027** |
| 2.2 DTI 16V ONP48, ONS48, ONU48 ONK/48 | D | 2171 | Y22DTR | M | +/- | Right/Droite | 06/03 ▸ 09/05 | 1341368 | **696026** |
| 2.2 DTI 16V ONP48, ONS48, ONU48 ONK/48 | D | 2171 | Y22DTR | A | +/- | Right/Droite | 06/03 ▸ 09/05 | 1341368 | **696026** |
| 2.2 DTI 16V ONP48, ONS48, ONU48 ONK/48 | D | 2171 | Y22DTR | A | +/- | Left/gauche | 06/03 ▸ 09/05 | 1341369 | **696027** |
| 3.0 CDTi V6 24V ONP48, ONS48, ONU48 ONK/48 | D | 2958 | Y30DT | M | + | | 06/03 ▸ 09/05 | 1341371 | **696029** |
| 3.0 CDTi V6 24V ONP48, ONS48, ONU48 ONK/48 | D | 2958 | Y30DT | M | + | | 06/03 ▸ 09/05 | 1341370 | **696028** |
| 3.0 CDTi V6 24V ONP48, ONS48, ONU48 ONK/48 | D | 2958 | Y30DT | A | + | | 06/03 ▸ 09/05 | 1341371 | **696029** |
| 3.0 CDTi V6 24V ONP48, ONS48, ONU48 ONK/48 | D | 2958 | Y30DT | A | + | | 06/03 ▸ 09/05 | 1341370 | **696028** |
| **TIGRA TWINTOP (2008>)** | | | | | | | | |
| 1.4 i Twinport 16V | E | 1364 | Z14XEP | M | + | | 07/08 ▸ 08/09 | 1341334 | **696284** |
| **VECTRA A (88>95)** | | | | | | | | |
| 1.6 S,1.6 i JVQ/419/468, JVR/419 468, JVU/419/468 | E | 1598 | 16SV,C16NZ,E16NZ | M | | | 1992 ▸ 09/95 | 1341244 | **696035** |
| 1.6 S,1.6 i JVR/619, JVU/619/668 | E | 1598 | 16SV,C16NZ | A | | | 1992 ▸ 09/95 | 1341244 | **696035** |
| 1.8 i N5000040 ▸ | E | 1796 | 18SV | M | - | | ▸ 09/95 | 1341244 | **696035** |
| 1.8,1.8 i JVT/419/468 | E | 1796 | C18NZ,E18NVR | M | | | 1992 ▸ 09/95 | 1341244 | **696035** |
| **VECTRA B (95>99)** | | | | | | | | |
| 1.8 i 16V F19, F68 W5149158, W7087941 ▸ | E | 1799 | X18XE | M | - | | 1998 ▸ 01/99 | 1341314 | **698344** |

Fan Motor + Blades Moteur + hélice Lüftermotor + Lüfterrad Motorino + Ventola Ventilatormotor Fan motoru + Kanatlar
Moto-ventilador + Aspas Мотор вентилятора + лопасти вентилятора Ventilátor motor és lapát Motor sahary + vrtule Ventilator motor + Lame Μοτέρ ανεμιστήρων + Πτερωτές



• **New** Nouveau **Nuevo** Novo **Nuovo** Nieuw **Neu** Nowość **Yeni** Новый Νέο **Novy**

# OPEL (.../...)

## VECTRA B (95>99) (.../...)

| | | CC | | | AC | | | OE | Valeo | |
|---|---|---|---|---|---|---|---|---|---|---|
| 1.8 i 16V | | E | 1799 | X18XE | A | - | C | 10/96 ▸ 01/99 | 1341275 | | |
| 1.8 i 16V | F19, F68 | E | 1799 | X18XE | M | - | | 10/95 ▸ 01/99 | 1341275 | | |
| ▸ W5149157, W7087940 | | | | | | | | | | | |
| 2.0 i,2.0 i 16V | F19, F68 | E | 1998 | 20NEJ,X20XEV | M | - | | 1998 ▸ 01/99 | 1341314 | **698344** | |
| W1168892, W1168891 ▸ | | | | | | | | | | | |
| 2.0 i,2.0 i 16V | F19, F68 | E | 1998 | 20NEJ,X20XEV | A | - | | 1998 ▸ 01/99 | 1341314 | **698344** | |
| W1168892, W7087941 ▸ | | | | | | | | | | | |
| 2.0 i,2.0 i 16V | F19, F68 | E | 1998 | 20NEJ,X20XEV | A | - | | 10/95 ▸ 1998 | 1341275 | | |
| ▸ W7087940, W1168891 | | | | | | | | | | | |
| 2.0 i,2.0 i 16V | F19, F68 | E | 1998 | 20NEJ,X20XEV | M | - | | 10/95 ▸ 1998 | 1341275 | | |

## VECTRA B (99>2002)

| | | | | | | | | | | |
|---|---|---|---|---|---|---|---|---|---|---|
| 1.8 i 16V | 0JU/19K/35K/68K, 0JX 19K/35K/68K | E | 1796 | Z18XE | M | - | C | ▸ 06/03 | 1341314 | **698344** |
| W1168892 ▸ | | | | | | | | | | |
| 1.8 i 16V | 0JU/19K/35K/68K, 0JX 19K/35K/68K | E | 1796 | Z18XE | A | - | C | ▸ 06/03 | 1341314 | **698344** |
| W7087941 ▸ | | | | | | | | | | |
| 1.8 i 16V | 0JU/19K/68K, 0JX/19K 68K | E | 1796 | Z18XE | M | - | C | 02/99 ▸ | 1341275 | |
| ▸ W1168891 | | | | | | | | | | |
| 1.8 i 16V | 0JU/19K/68K, 0JX/19K 68K | E | 1796 | Z18XE | A | - | C | 02/99 ▸ | 1341275 | |

## VECTRA C (2002>2005)

| | | | | | | | | | | |
|---|---|---|---|---|---|---|---|---|---|---|
| 1.6 i 16V | | E | 1598 | Z16XE | M | +/- | | 04/04 ▸ 09/05 | 1341362 | **698844** |
| 1.8 i 16V | JV68KE, JVW68KE 0JK69K, 0JU69K, 0JV68, JK3/5KE | E | 1796 | Z18XE,Z18XEL | M | +/- | | 04/02 ▸ 09/05 | 1341362 | **698844** |
| 1.8 i 16V | JK35 | E | 1796 | Z18XE | A | + | Right/Droite | 07/03 ▸ 09/05 | 1341365 | **696001** |
| 1.8 i 16V | JK35 | E | 1796 | Z18XE | A | + | Left/gauche | 07/03 ▸ 09/05 | 1341368 | **696026** |
| 1.8 i 16V | JK35 | E | 1796 | Z18XE | A | - | | 07/03 ▸ 09/05 | 1341362 | **698844** |
| 2.0 i Turbo 16V | JS35MY, JW68MY | E | 1998 | Z20NET | M | +/- | Right/Droite | 03/03 ▸ 09/05 | 1341365 | **696001** |
| 2.0 i Turbo 16V | JS35MY, JW68MY | E | 1998 | Z20NET | M | +/- | Left/gauche | 03/03 ▸ 09/05 | 1341368 | **696026** |
| 2.2 DIG 16V | | E | 2198 | Z22YH | M | +/- | | 07/03 ▸ 09/05 | 1341362 | **698844** |
| 2.2 DIG 16V,2.2 i 16V | JW68P1, 0JK69P 0JU69P, JU3/5P3 | E | 2198 | Z22SE,Z22YH | M | + | Right/Droite | 04/02 ▸ 09/05 | 1341365 | **696001** |
| 41048790 ▸ | | | | | | | | | | |
| 2.2 DIG 16V,2.2 i 16V | JW68P1, 0JK69P 0JU69P, JU3/5P3 | E | 2198 | Z22SE,Z22YH | M | + | Left/gauche | 01/03 ▸ 09/05 | 1341368 | **696026** |
| 31000001, 41048790 ▸ | | | | | | | | | | |
| 2.2 i 16V | JW68P1, 0JK69P | E | 2198 | Z22SE | M | + | | 2004 ▸ 09/05 | 1341362 | **698844** |
| 41048790 ▸ | | | | | | | | | | |
| 2.2 i 16V | 0JU69P | E | 2198 | Z22SE | M | - | | 04/02 ▸ 09/05 | 1341362 | **698844** |
| 2.2 DIG 16V | JU35P2 | E | 2198 | Z22YH | A | +/- | | 07/03 ▸ 09/05 | 1341362 | **698844** |
| 2.2 DIG 16V,2.2 i 16V | JW68P1, 0JK69P 0JU69P, JU3/5P2 | E | 2198 | Z22SE,Z22YH | A | + | Right/Droite | 04/02 ▸ 09/05 | 1341365 | **696001** |
| 2.2 DIG 16V,2.2 i 16V | JW68P1, 0JK69P 0JU69P, JU3/5P2 | E | 2198 | Z22SE,Z22YH | A | + | Left/gauche | 07/03 ▸ 09/05 | 1341368 | **696026** |
| 41048790 ▸ | | | | | | | | | | |
| 2.2 i 16V | 0JK69P, 0JU69P, JW6 8P1 | E | 2198 | Z22SE | A | + | | 2004 ▸ 09/05 | 1341362 | **698844** |
| 41048790 ▸ | | | | | | | | | | |
| 2.2 i 16V | 0JK69P, 0JU69P, JW6 8P1 | E | 2198 | Z22SE | M | + | Right/Droite | 04/02 ▸ 12/02 | 1341364 | **696024** |
| ▸ 21999999 | | | | | | | | | | |
| 2.2 i 16V | 0JK69P, 0JU69P, JW6 8P1 | E | 2198 | Z22SE | A | + | Right/Droite | 04/02 ▸ 12/02 | 1341364 | **696024** |
| ▸ 21999999 | | | | | | | | | | |
| 3.2 i V6 24V | 0JV/35Z/68Z | E | 3175 | Z32SE | M | +/- | Left/gauche | 01/03 ▸ 09/05 | 1341368 | **696026** |
| 31000001 ▸ | | | | | | | | | | |
| 3.2 i V6 24V | 0JV35Z | E | 3175 | Z32SE | M | +/- | Right/Droite | 10/03 ▸ 09/05 | 1341365 | **696001** |
| 3.2 i V6 24V | 0JV68Z | E | 3175 | Z32SE | M | - | Right/Droite | 06/02 ▸ 09/05 | 1341365 | **696001** |
| 3.2 i V6 24V | 0JV/35Z/68Z | E | 3175 | Z32SE | A | +/- | Left/gauche | 01/03 ▸ 09/05 | 1341368 | **696026** |
| 3.2 i V6 24V | 0JV/35Z/68Z | E | 3175 | Z32SE | A | + | Left/gauche | 01/03 ▸ 09/05 | 1341369 | **696027** |
| 31000001 ▸ | | | | | | | | | | |
| 3.2 i V6 24V | 0JV/35Z/68Z | E | 3175 | Z32SE | A | - | Right/Droite | 06/02 ▸ 09/05 | 1341365 | **696001** |
| 3.2 i V6 24V | 0JV68Z | E | 3175 | Z32SE | M | +/- | Right/Droite | 06/02 ▸ 12/02 | 1341364 | **696024** |
| ▸ 21999999 | | | | | | | | | | |

# OPEL (.../...)

## VECTRA C (2002>2005) (.../...)

| Type Ctr. | | CC | | AC | | | | OE | Valeo |
|---|---|---|---|---|---|---|---|---|---|
| 3.2 i V6 24V OJV68Z ▸ 21999999 | E | 3175 | Z32SE | A | +/- | Right/Droite | 06/02 ▸ 12/02 | 1341364 | **696024** |
| 3.2 i V6 24V OJV68Z ▸ 21999999 | E | 3175 | Z32SE | A | + | Left/gauche | 06/02 ▸ 12/02 | 1341366 | **696025** |
| 1.9 CDTI,1.9 CDTI 16V | D | 1910 | Z19DT,Z19DTH | M | + | Right/Droite | 04/04 ▸ 09/05 | 1341383 | **696030** |
| 1.9 CDTI 16V | D | 1910 | Z19DTH | M | + | Right/Droite | 01/05 ▸ 09/05 | 1341368 | **696026** |
| 1.9 CDTI,1.9 CDTI 16V | D | 1910 | Z19DT,Z19DTH | M | - | Left/gauche | 04/04 ▸ 09/05 | 1341369 | **696027** |
| 1.9 CDTI 16V | D | 1910 | Z19DTH | M | - | Left/gauche | 04/04 ▸ 09/05 | 1341368 | **696026** |
| 1.9 CDTI 16V | D | 1910 | Z19DTH | M | - | Left/gauche | 01/05 ▸ 09/05 | 1341365 | **696001** |
| 1.9 CDTI 16V | D | 1910 | Z19DTH | A | + | Right/Droite | 04/04 ▸ 09/05 | 1341380 | **696080** |
| 1.9 CDTI 16V | D | 1910 | Z19DTH | A | - | Right/Droite | 04/04 ▸ 09/05 | 1341383 | **696030** |
| 1.9 CDTI 16V | D | 1910 | Z19DTH | A | - | Left/gauche | 04/04 ▸ 09/05 | 1341369 | **696027** |
| 2.0 DTi 16V JK35MV, JV68, OJ OJK69M, OJU69M, JK ▸ 31000001 | D | 1995 | Y20DTH | M | +/- | Left/gauche | 04/02 ▸ 03/05 | 1341369 | **696027** |
| 2.0 DTi 16V JK35MV, JV68, OJ OJK69M, OJU69M, JK ▸ 31000001 | D | 1995 | Y20DTH | M | +/- | | 01/03 ▸ 03/05 | 1341368 | **696026** |
| 2.0 DTi 16V OJ, OJK69M, OJU69M JV6/8 ▸ 21999999 | D | 1995 | Y20DTH | M | +/- | Left/gauche | 04/02 ▸ 11/02 | 1341366 | **696025** |
| 2.0 DTi 16V OJ, OJK69M, OJU69M JV6/8 ▸ 21999999 | D | 1995 | Y20DTH | M | +/- | Right/Droite | 04/02 ▸ 12/02 | 1341364 | **696024** |
| 2.2 DTI 16V JS35PP, JU35PP JV68PP, JVW68PP, OJK69P, OJU69P, OJV68, JK3 5PP | D | 2171 | Y22DTR | M | +/- | Left/gauche | 01/03 ▸ 09/05 | 1341369 | **696027** |
| 2.2 DTI 16V JS35PP, JU35PP JV68PP, JVW68PP, OJK69P, OJU69P, OJV68, JK3 5PP | D | 2171 | Y22DTR | M | +/- | Left/gauche | 01/03 ▸ 09/05 | 1341368 | **696026** |
| 2.2 DTI 16V JS35PP, JU35PP JV68PP, JVW68PP, OJK69P, OJU69P, JK3/5PP | D | 2171 | Y22DTR | A | +/- | Left/gauche | 01/03 ▸ 09/05 | 1341368 | **696026** |
| 2.2 DTI 16V JS35PP, JU35PP JV68PP, JVW68PP, OJK69P, OJU69P, JK3/5PP ▸ 31000001 | D | 2171 | Y22DTR | A | +/- | Left/gauche | 01/03 ▸ 09/05 | 1341369 | **696027** |
| 2.2 DTI 16V JVW68PP, OJK69P OJU69P, OJV68, JV6/8PP ▸ 21999999 | D | 2171 | Y22DTR | M | +/- | Left/gauche | 04/02 ▸ 12/02 | 1341366 | **696025** |
| 2.2 DTI 16V JVW68PP, OJK69P OJU69P, OJV68, JV6/8PP ▸ 21999999 | D | 2171 | Y22DTR | M | +/- | Right/Droite | 04/02 ▸ 12/02 | 1341364 | **696024** |
| 2.2 DTI 16V JVW68PP, OJK69P OJU69P, JV6/8PP ▸ 21999999 | D | 2171 | Y22DTR | A | +/- | Left/gauche | 04/02 ▸ 12/02 | 1341366 | **696025** |
| 2.2 DTI 16V JV68PP ▸ 21999999 | D | 2171 | Y22DTR | A | +/- | Right/Droite | 06/02 ▸ 12/02 | 1341364 | **696024** |
| 2.2 DTI 16V OJK69P, OJU69P, JVW6 8PP ▸ 21999999 | D | 2171 | Y22DTR | A | + | Right/Droite | 04/02 ▸ 12/02 | 1341364 | **696024** |
| 3.0 CDTI V6 24V JU35XG, JU69XG JVW68XH, JS3/5XG | D | 2958 | Y30DT | M | + | | 06/03 ▸ 09/05 | 1341370 | **696028** |
| 3.0 CDTI V6 24V JU35XG, JU69XG JVW68XH, JS3/5XG | D | 2958 | Y30DT | M | + | | 06/03 ▸ 09/05 | 1341371 | **696029** |
| 3.0 CDTI V6 24V JU35XH, JU69XH JVW68XH, JS3/5XH | D | 2958 | Y30DT | A | + | | 06/03 ▸ 09/05 | 1341370 | **696028** |
| 3.0 CDTI V6 24V JU35XH, JU69XH JVW68XH, JS3/5XH | D | 2958 | Y30DT | A | + | | 06/03 ▸ 09/05 | 1341371 | **696029** |

## VECTRA C (2005>)

| | | | | | | | | | |
|---|---|---|---|---|---|---|---|---|---|
| 1.6 i 16V | E | 1598 | Z16XE | M | +/- | | 10/05 ▸ 02/09 | 1341362 | **698844** |
| 1.8 i 16V | E | 1796 | Z18XE,Z18XER | M | +/- | | 10/05 ▸ 02/09 | 1341362 | **698844** |
| 2.0 i Turbo 16V | E | 1998 | Z20NET | M | + | Right/Droite | 10/05 ▸ 02/09 | 1341365 | **696001** |
| 2.0 i Turbo 16V | E | 1998 | Z20NET | M | + | Left/gauche | 10/05 ▸ 02/09 | 1341368 | **696026** |
| 2.2 DIG 16V | E | 2198 | Z22YH | M | +/- | Right/Droite | 10/05 ▸ 02/09 | 1341362 | **698844** |
| 2.2 DIG 16V | E | 2198 | Z22YH | A | +/- | Right/Droite | 10/05 ▸ 02/09 | 1341362 | **698844** |
| 2.8 i V6 Turbo 24V | E | 2792 | Z28NEL,Z28NET | M | + | Left/gauche | 10/05 ▸ 02/09 | 1341369 | **696027** |
| 2.8 i V6 Turbo 24V | E | 2792 | Z28NEL,Z28NET | M | + | Right/Droite | 10/05 ▸ 02/09 | 1341383 | **696030** |
| 2.8 i V6 Turbo 24V | E | 2792 | Z28NEL,Z28NET | A | + | Right/Droite | 10/05 ▸ 02/09 | 1341383 | **696030** |
| 2.8 i V6 Turbo 24V | E | 2792 | Z28NEL,Z28NET | A | + | Left/gauche | 10/05 ▸ 02/09 | 1341369 | **696027** |
| 1.9 CDTI | D | 1910 | Z19DTL | M | +/- | Left/gauche | 10/05 ▸ 02/09 | 1341365 | **696001** |

Fan Motor + Blades Moteur + hélice Lüftermotor + Lüfterrad Motorino + Ventola Ventilatormotor Fan motoru + Kanatlar
Moto-ventilador + Aspas Мотор вентилятора + лопасти вентилятора Ventilátor motor és lapát Motor sahary + vrtule Ventilator motor + Lame Μοτέρ ανεμιστήρων + Πτερωτές



• **New** Nouveau **Nuevo** Novo **Nuovo** Nieuw **Neu** Nowość **Yeni** Новый Νέο **Novy**

| Type Ctr. | | CC | | | AC | | | OE | Valeo | |
|---|---|---|---|---|---|---|---|---|---|---|

# OPEL (.../...)

## VECTRA C (2005>) (.../...)

| | | | | | | | | | | |
|---|---|---|---|---|---|---|---|---|---|---|
| 1.9 CDTI | | D | 1910 | Z19DTL | M | +/- | Right/Droite | 10/05 ▸ 02/09 | 1341368 | 696026 |
| 1.9 CDTI | | D | 1910 | Z19DT | M | + | Left/gauche | 10/05 ▸ 02/09 | 1341365 | 696001 |
| 1.9 CDTI,1.9 CDTI 16V | | D | 1910 | Z19DT,Z19DTH | M | + | Right/Droite | 10/05 ▸ 02/09 | 1341368 | 696026 |
| 1.9 CDTI 16V | | D | 1910 | Z19DTH | M | - | Left/gauche | 10/05 ▸ 02/09 | 1341365 | 696001 |
| 1.9 CDTI 16V | | D | 1910 | Z19DTH | M | | Left/gauche | 10/05 ▸ 02/09 | 1341369 | 696027 |
| 1.9 CDTI 16V | | D | 1910 | Z19DTH | A | + | Right/Droite | 10/05 ▸ 02/09 | 1341380 | 696080 |
| 1.9 CDTI 16V | | D | 1910 | Z19DTH | A | - | Right/Droite | 10/05 ▸ 02/09 | 1341383 | 696030 |
| 1.9 CDTI 16V | | D | 1910 | Z19DTH | A | - | Left/gauche | 10/05 ▸ 02/09 | 1341369 | 696027 |

## ZAFIRA (98>2003)

| | | | | | | | | | | |
|---|---|---|---|---|---|---|---|---|---|---|
| 1.6 i 16V | WOL0TG | E | 1598 | X16XEL | M | +/- | | 01/99 ▸ | 1341299 | 696173 |
| 1.6 i 16V | WOL0TG | E | 1598 | X16XEL,Z16XE/D3 | M | + | | 01/99 ▸ 06/03 | 1341344 | 696173 |
| 1.6 i 16V | WOL0TG | E | 1598 | Z16XE | M | - | | 01/99 ▸ 06/03 | 1341344 | 696173 |
| 1.6 i 16V | WOL0TG | E | 1598 | Z16XE,Z16XE/D3 | M | - | | 01/99 ▸ | 1341299 | 696173 |
| 1.6 i 16V | WOL0TG | E | 1598 | X16XEL | A | +/- | | 01/99 ▸ | 1341299 | 696173 |
| 1.6 i 16V | WOL0TG | E | 1598 | X16XEL | A | + | | 01/99 ▸ 06/03 | 1341344 | 696173 |
| 1.6 i 16V | WOL0TG | E | 1598 | Z16XE | A | - | | 01/99 ▸ | 1341299 | 696173 |
| 1.6 i 16V | WOL0TG | E | 1598 | Z16XE | A | - | | 01/99 ▸ 06/03 | 1341344 | 696173 |
| 1.8 i 16V | WOL0TG | E | 1796 | X18XE1 | M | +/- | C | 01/99 ▸ | 1341299 | 696173 |
| 1.8 i 16V | WOL0TG | E | 1796 | X18XE1 | M | +/- | C | 01/99 ▸ 09/00 | 1341344 | 696173 |
| 1.8 i 16V | WOL0TG | E | 1796 | Z18XE | M | + | | 08/00 ▸ 06/03 | 1341344 | 696173 |
| 1.8 i 16V | WOL0TG | E | 1796 | Z18XE | M | - | | 08/00 ▸ | 1341299 | 696173 |
| 1.8 i 16V | WOL0TG | E | 1796 | Z18XE | M | - | | 08/00 ▸ 06/03 | 1341344 | 696173 |
| 1.8 i 16V | WOL0TG | E | 1796 | X18XE1 | A | +/- | C | 01/99 ▸ 09/00 | 1341344 | 696173 |
| 1.8 i 16V | WOL0TG | E | 1796 | X18XE1 | A | +/- | C | 01/99 ▸ | 1341299 | 696173 |
| 1.8 i 16V | WOL0TG | E | 1796 | Z18XE | A | + | | 08/00 ▸ 06/03 | 1341344 | 696173 |
| 1.8 i 16V | WOL0TG | E | 1796 | Z18XE | A | - | | 08/00 ▸ 06/03 | 1341344 | 696173 |
| 1.8 i 16V | WOL0TG | E | 1796 | Z18XE | A | - | | 08/00 ▸ | 1341299 | 696173 |
| 2.2 i 16V | WOL0TG | E | 2198 | Z22SE | M | + | | 01/99 ▸ 06/03 | 1341346 | 696280 |
| 2.2 i 16V | WOL0TG | E | 2198 | Z22SE | M | - | | 01/99 ▸ | 1341299 | 696173 |
| 2.2 i 16V | WOL0TG | E | 2198 | Z22SE | M | - | | 01/99 ▸ 06/03 | 1341344 | 696173 |
| 2.2 i 16V | WOL0TG | E | 2198 | Z22SE | A | + | | 01/99 ▸ 06/03 | 1341346 | 696280 |
| 2.2 i 16V | WOL0TG | E | 2198 | Z22SE | A | - | | 01/99 ▸ | 1341299 | 696173 |
| 2.2 i 16V | WOL0TG | E | 2198 | Z22SE | A | - | | 01/99 ▸ 06/03 | 1341344 | 696173 |
| 2.0 DT 16V,2.0 DTi 16V | WOL0TG | D | 1995 | X20DTL,Y20DTH | M | +/- | | 01/99 ▸ 06/03 | 1341346 | 696280 |
| 2.0 DT 16V,2.0 DTI 16V | WOL0TG | D | 1995 | X20DTL,Y20DTL | A | +/- | | 01/99 ▸ 06/03 | 1341346 | 696280 |

## ZAFIRA (2003>2005)

| | | | | | | | | | | |
|---|---|---|---|---|---|---|---|---|---|---|
| 1.6 i GNV 16V | QG75IB, QM75IB | G | 1598 | Z16YNG | M | +/- | | 07/03 ▸ 06/05 | 1341344 | 696173 |
| 1.8 i 16V | QD75KH, QX75KH | E | 1796 | Z18XE | M | - | | 07/03 ▸ 06/05 | 1341344 | 696173 |
| 2.2 i 16V | QD75P1 | E | 2198 | Z22SE | M | + | | 07/03 ▸ 06/05 | 1341346 | 696280 |
| 2.2 i 16V | QD75P1 | E | 2198 | Z22SE | M | - | | 07/03 ▸ 06/05 | 1341344 | 696173 |
| 2.2 i 16V | QD75P1 | E | 2198 | Z22SE | A | + | | 07/03 ▸ 06/05 | 1341346 | 696280 |
| 2.2 i 16V | QD75P1 | E | 2198 | Z22SE | A | - | | 07/03 ▸ 06/05 | 1341344 | 696173 |
| 2.0 DTI 16V | QG75MR, QM75MR QX75MR, QD7/5MR | D | 1995 | Y20DTH | M | +/- | | 07/03 ▸ 06/05 | 1341346 | 696280 |
| 2.0 DTI 16V | QM75MI, QX75MI, QG7 5MI | D | 1995 | Y20DTH | A | +/- | | 07/03 ▸ 06/05 | 1341346 | 696280 |
| 2.2 DTI 16V | QD7/5PR/5PW, QX7/5PR 5PW | D | 2171 | Y22DTR | M | +/- | | 07/03 ▸ 06/05 | 1341346 | 696280 |

# OPEL

## COMBO (2001>2004)

| | | | | | | | | | | |
|---|---|---|---|---|---|---|---|---|---|---|
| 1.7 DI 16V | DC25JD, DF25JD | D | 1686 | Y17DTL | M | | | 10/01 ▸ 12/02 | 1341334 | 696284 |

## MOVANO

| | | | | | | | | | | |
|---|---|---|---|---|---|---|---|---|---|---|
| 1.9 DTi | FD0P, JD0P | D | 1870 | F9Q.7.72 | M | + | Left/gauche | 10/03 ▸ 10/06 | 4501134 | 698424 |
| 1.9 Dti | FD, JD | D | 1870 | F9Q.7.70,F9Q.7.72 | M | - | | 08/00 ▸ 07/02 | 4403573 | 698412 |
| 1.9 DTi | FD0P, JD0P | D | 1870 | F9Q.7.72 | M | - | | 10/03 ▸ 10/06 | 4415731 | 698412 |
| 2.2 Dti 16V | FD, JD, JD0N, UD, ED | D | 2188 | G9T.7.20,G9T.7.22,G9T.7.50 | M | + | | 09/00 ▸ 10/05 | 4501134 | 698424 |
| 2.2 Dti 16V | FD, JD, UD, ED | D | 2188 | G9T.7.22 | M | - | | 09/00 ▸ 09/03 | 4403573 | 698412 |
| 2.2 DTi 16V | JD0N | D | 2188 | G9T.7.50 | M | - | Left/gauche | 10/03 ▸ 10/05 | 4415731 | 698412 |
| 2.5 CDTi,2.5 CDTi 16V 2.5 DTi,2.5 Dti 16V | ED0/E/U/V, HD0U HD0V, JD0E, FD0/E/U V, UD0/E/U/V | D | 2464 | G9U.7.20,G9U.7.54 | M | + | Left/gauche | 10/01 ▸ | 4501134 | 698424 |
| 2.5 Dti 16V | FD0E, JD0E, UD0E ED0/E | D | 2464 | G9U.7.20 | M | - | | 10/01 ▸ 09/03 | 4403573 | 698412 |

| Type Ctr. | | CC | | AC | | | OE | Valeo | |
|---|---|---|---|---|---|---|---|---|---|
| **OPEL (.../...)** | | | | | | | | | |
| **MOVANO (.../...)** | | | | | | | | | |
| 2.5 CDTi,2.5 CDTi 16V<br>2.5 DTi,2.5 DTi 16V | ED0/U/V, HD0U, HD0V<br>FD0/U/V, UD0/U/V | D | 2464 | G9U.7.20,G9U.7.54 | M | - | Left/gauche | 10/03 ▸ | 4415731 | **698412** | |
| 2.5 D | FD, JD, UD, ED | D | 2499 | S8U.7.72 | M | + | | 10/98 ▸ 10/01 | 4501134 | **698424** | |
| 2.5 D | ED | D | 2499 | S8U.7.72 | M | - | | 10/98 ▸ 10/01 | 4500849 | **698412** | |
| 2.8 Dti | FD0C, JD0F, UD0C<br>ED0/C | D | 2800 | S9W.7.00,S9W.7.02 | M | + | | 10/98 ▸ 10/01 | 4501134 | **698424** | |
| 2.8 Dti<br>B000726, B046282 ▸ | FD0C, JD0F, UD0C<br>ED0/C | D | 2800 | S9W.7.00,S9W.7.02 | M | - | | ▸ 10/01 | 4403573 | **698412** | |
| 2.8 Dti<br>▸ B046281, B005339 | FD0C, JD0F, UD0C<br>ED0/C | D | 2800 | S9W.7.00,S9W.7.02 | M | - | | 10/98 ▸ | 4500849 | **698412** | |
| 3.0 CDTi 16V | FD0S, UD0S, ED0/S | D | 2953 | ZD3.2.02 | M | + | | 10/03 ▸ 01/06 | 4501134 | **698424** | |
| 3.0 CDTi 16V | FD0S, UD0S, ED0/S | D | 2953 | ZD3.2.02 | M | + | Left/gauche | 10/03 ▸ 01/06 | 4415579 | **698424** | |
| 3.0 CDTi 16V | FD0S, UD0S, ED0/S | D | 2953 | ZD3.2.02 | M | - | | 10/03 ▸ 01/06 | 4415731 | **698412** | |
| **PEUGEOT** | | | | | | | | | | | |
| **106 (96>2003)** | | | | | | | | | | | |
| 1.1 i | 1AH/DYE/DZD/DZE, 1SHDZD, 1CH/DYE/DZD/DZE | E | 1124 | TU1M+ | M | + | | 03/96 ▸ 12/96 | 125362 | **696191** | |
| 1.1 i,1.1 i GPL | 1AH/DYE/DZD/DZE, 1CH<br>DYE/DZD/DZE, 1SH/DZD/DZE | E | 1124 | TU1M+ | M | + | | 12/96 ▸ 05/00 | 125378 | **696189** | |
| 1.1 i,1.1 i GPL | 1AH/DYE/DZD/DZE, 1CH<br>DYE/DZD/DZE, 1SH/DZD/DZE | E | 1124 | TU1M+ | M | + | | 12/96 ▸ 05/00 | 125377 | **696191** | |
| 1.1 i | 1CHFXF, 1SHFXF, 1AH/FXF | E | 1124 | TU1JP | M | + | Right/Droite | 09/00 ▸ 07/03 | 1253A2 | **696190** | |
| 1.1 i | 1CHFXF, 1SHFXF, 1AH/FXF | E | 1124 | TU1JP | M | - | | 09/00 ▸ 07/03 | 1253A1 | **696189** | |
| 1.4,1.4 i | 1AK/5A2/FXS/FXT, 1CK<br>5A2/FXD/FXE/FXS/FXT | E | 1360 | TU3.2,TU3JP | M | + | | 03/96 ▸ 12/96 | 125362 | **696191** | |
| 1.4,1.4 i | 1AK/5A2/FXE/FXS/FXT<br>1CK/5A2/FXD/FXE/FXS/FXT | E | 1360 | TU3.2,TU3JP | M | + | | 12/96 ▸ 05/00 | 125377 | **696191** | |
| 1.4,1.4 i | 1AK/5A2/FXE/FXS/FXT<br>1CK/5A2/FXD/FXE/FXS/FXT | E | 1360 | TU3.2,TU3JP | M | + | | 12/96 ▸ 05/00 | 125378 | **696189** | |
| 1.4 i | 1AKFXU, 1CKFXU | E | 1360 | TU3JP | M | - | | 01/99 ▸ 07/03 | 1253A1 | **696189** | |
| 1.4 i | 1AKFXL, 1CKFXL | E | 1360 | TU3JP | A | + | | 05/97 ▸ 07/03 | 125377 | **696191** | |
| 1.6 i 16V | 1CN/FX2/FXE/FXF | E | 1587 | TU5J4 | M | + | Right/Droite | 03/96 ▸ 07/03 | 1253A2 | **696190** | |
| 1.6 i 16V | 1CN/FX2/FXE/FXF | E | 1587 | TU5J4 | M | + | Left/gauche | 03/96 ▸ 07/03 | 1253A3 | **696190** | |
| 1.6 i | 1ANFZE, 1CNFZE | E | 1587 | TU5JP | M | + | | 03/96 ▸ 12/96 | 125362 | **696191** | |
| 1.6 i | 1AN/FZE/FZT, 1CN/FZE/FZT | E | 1587 | TU5JP | M | + | | 12/96 ▸ 05/00 | 125377 | **696191** | |
| 1.6 i | 1AN/FZE/FZT, 1CN/FZE/FZT | E | 1587 | TU5JP | M | + | | 12/96 ▸ 05/00 | 125378 | **696189** | |
| 1.6 i | 1CNFWE | E | 1587 | TU5J2 | M | - | | 12/96 ▸ 05/00 | 125377 | **696191** | |
| 1.6 i,1.6 i 16V | 1CN/FWE/FX2/FXE/FXF | E | 1587 | TU5J2,TU5J4 | M | - | | 05/00 ▸ 07/03 | 125361 | **696188** | |
| 1.6 i | 1ANFZL, 1CNFZL | E | 1587 | TU5JP | A | - | | 03/96 ▸ 12/96 | 125361 | **696188** | |
| 1.6 i | 1ANFZL, 1CNFZL | E | 1587 | TU5JP | A | - | | 12/96 ▸ 05/00 | 125377 | **696191** | |
| 1.5 D | 1AV/JYE/JZD/JZE, 1CV/JYE/JZD/JZE, 1SV/JYE<br>JZD/JZE | D | 1527 | TUD5 | M | +/- | | 03/96 ▸ 12/96 | 125362 | **696191** | |
| 1.5 D | 1AV/JYE/JYF/JZD/JZE/JZF, 1CV/JYE/JYF/JZD/JZE<br>JZF, 1SV/JYE/JZD/JZE | D | 1527 | TUD5 | M | +/- | | 12/96 ▸ 07/03 | 125377 | **696191** | |
| 1.5 D | 1AV/JYE/JYF/JZD/JZE/JZF, 1CV/JYE/JYF/JZD/JZE<br>JZF, 1SV/JYE/JZD/JZE | D | 1527 | TUD5 | M | + | | 03/96 ▸ 07/03 | 125378 | **696189** | |
| 1.5 D | 1AV/JUF/JXF, 1SVJXF, 1CV/JUF/JXF | D | 1527 | TUD5B | M | + | Right/Droite | 01/99 ▸ 07/03 | 1253A2 | **696190** | |
| 1.5 D | 1AV/JUF/JXF, 1SVJXF, 1CV/JUF/JXF | D | 1527 | TUD5B | M | + | Left/gauche | 01/99 ▸ 07/03 | 1253A3 | **696190** | |
| 1.5 D | 1AV/JUF/JXF, 1SVJXF, 1CV/JUF/JXF | D | 1527 | TUD5B | M | - | | 01/99 ▸ 07/03 | 125361 | **696188** | |
| **206** | | | | | | | | | | | |
| 1.1 i | 2AH/FXF/FYE/FZ2/FZE/FZW, 2EHFXF, 2CH/FXF/FYE<br>FZ2/FZE/FZW, 2SH/FXU/FZW | E | 1124 | TU1JP | M | + | | 09/98 ▸ 10/05 | 1253C9 | **696071** | |
| 1.1 i<br>8883 ▸ | 2AH/FXA/FXF/FYE/FZ2/FZE/FZW, 2EHFXF, 2CH/FXA<br>FXF/FYE/FZ2/FZE/FZW, 2SH/FXU/FZW | E | 1124 | TU1JP | M | + | | 02/01 ▸ 10/05 | 1253C5 | **696069** | |
| 1.1 i<br>▸ 8882 | 2AH/FXA/FXF/FYE/FZ2/FZE/FZW, 2CH/FXA/FXF/FYE<br>FZ2/FZE/FZW, 2SH/FXU/FZW | E | 1124 | TU1JP | M | + | | 09/98 ▸ 03/01 | 125391 | **696073** | |
| 1.1 i | 2AH/FXA/FXF/FYE/FZ2/FZE/FZW, 2EHFXF, 2CH/FXA<br>FXF/FYE/FZ2/FZE/FZW, 2SH/FXU/FZW | E | 1124 | TU1JP | M | - | | 09/98 ▸ 10/05 | 125383 | •**696368** | |
| 1.4 i<br>8883 ▸ | 2AK/6C2/6C8/FWA/FWF/FXE/FXF/FXW, 2DKFWA, 2CK<br>6C2/FWA/FWF/FXE/FXW, 2EK/FWA/FWF | E | 1360 | TU3A,TU3JP | M | + | | 09/98 ▸ 2010 | 1253C5 | **696069** | |

Fan Motor + Blades Moteur + hélice Lüftermotor + Lüfterrad Motorino + Ventola Ventilatormotor Fan motoru + Kanatlar
Moto-ventilador + Aspas Мотор вентилятора + лопасти вентилятора Ventilátor motor és lapát Motor sahary + vrtule Ventilator motor + Lame Μοτέρ ανεμιστήρων + Πτερωτές



• **New** Nouveau **Nuevo** Novo **Nuovo** Nieuw **Neu** Nowość **Yeni** Новый Νέο **Novy**

| Type Ctr. | | CC | | AC | | | OE | Valeo | |
|---|---|---|---|---|---|---|---|---|---|

# PEUGEOT (.../...)

## 206 (.../...)

| | | | | | | | | | |
|---|---|---|---|---|---|---|---|---|---|
| 1.4 i 2AK/6C2/6C8/FWA/FWF/FXE/FXW, 2DKFWA, 2CK/6C2 FWA/FWF/FXE/FXW, 2EK/FWA/FWF 11662 ▸ | E | 1360 | TU3A,TU3JP | M | + | | 09/98 ▸ 2010 | 1253E0 | |
| 1.4 i 2AK/FWB/FWR/FX4/FXP, 2CK/FWB/FWR/FXP | E | 1360 | TU3A,TU3JP | A | + | | 03/99 ▸ 02/09 | 1253C9 | **696071** |
| 1.4 i 2AK/FWB/FWR/FX4/FXP, 2CK/FWB/FWR/FXP 8883 ▸ | E | 1360 | TU3A,TU3JP | A | + | | 09/00 ▸ 02/09 | 1253C5 | **696069** |
| 1.4 i 2AK/FWB/FWR/FX4/FXP, 2CK/FWB/FWR/FXP | E | 1360 | TU3A,TU3JP | A | + | | 09/00 ▸ 02/09 | 1253E0 | |
| 1.4 i,1.4 i 16V 2AK/6C2/6C8/FUA/FUF FWA/FWF/FXE/FXF/FXW, 2DKFWA, 2CK/6C2/FUF/FWA FWF/FXE/FXW, 2EK/FUF/FWA/FWF, 2HK/FUA/FUF 2KK/FUA/FUF ▸ 11661 | E | 1360 | ET3J4,TU3A,TU3JP | M | + | | 09/98 ▸ 2010 | 1253C9 | **696071** |
| 1.4 i 2AK/6C2/6C8/FWF/FXE/FXF/FXW, 2CK/6C2/FWF/FXE FXW ▸ 8882 | E | 1360 | TU3JP | M | + | | 09/98 ▸ 03/01 | 125391 | **696073** |
| 1.4 i 2AK/FWR/FX4/FXP, 2CK/FWR/FXP ▸ 8882 | E | 1360 | TU3JP | A | + | | 03/99 ▸ 03/01 | 125391 | **696073** |
| 1.4 i 2AK/6C2/6C8/FWA/FWF/FXE/FXF/FXW, 2DKFWA, 2CK 6C2/FWA/FWF/FXE/FXW, 2EK/FWA/FWF | E | 1360 | TU3A,TU3JP | M | - | | 09/98 ▸ 2010 | 125383 | **•696368** |
| 1.4 i 2AK/FWB/FWR/FX4/FXP, 2CK/FWB/FWR/FXP | E | 1360 | TU3A,TU3JP | A | - | | 03/99 ▸ 02/09 | 125383 | **•696368** |
| 1.6 i,1.6 i 16V 2AN/FUF/FUU/FZE/FZW 2CN/FUF/FUU/FZE/FZW, 2HNFUA, 2DN/FU/FUA/FUF 2JN/FUA/FUF, 2KN/FUA/FUF | E | 1587 | TU5JP,TU5JP4 | M | + | | 09/98 ▸ 2010 | 1253C9 | **696071** |
| 1.6 i,1.6 i 16V 2AN/FUF/FUU/FZE/FZW 2CN/FUF/FUU/FZE/FZW, 2HNFUA, 2DN/FU/FUA/FUF 2JN/FUA/FUF, 2KN/FUA/FUF | E | 1587 | TU5JP,TU5JP4 | M | + | | 03/01 ▸ 2010 | 1253C5 | **696069** |
| 1.6 i,1.6 i 16V 2AN/FUR/FZP, 2CN/FUR FZP, 2DN/FU/FUB/FUR, 2HN/FUB/FUR, 2JN/FUB FUR, 2KN/FUB/FUR | E | 1587 | TU5JP,TU5JP4 | A | + | | 03/99 ▸ 2010 | 1253C9 | **696071** |
| 1.6 i,1.6 i 16V 2AN/FUR/FZP, 2CN/FUR FZP, 2DN/FU/FUB/FUR, 2HN/FUB/FUR, 2JN/FUB FUR, 2KN/FUB/FUR | E | 1587 | TU5JP,TU5JP4 | A | + | | 03/01 ▸ 2010 | 1253C5 | **696069** |
| 1.6 i,1.6 i 16V 2AN/FUF/FUU/FZE/FZW 2DNFUF, 2CN/FUF/FUU/FZE/FZW ▸ 8882 | E | 1587 | TU5JP,TU5JP4 | M | + | | 09/98 ▸ 03/01 | 125391 | **696073** |
| 1.6 i,1.6 i 16V 2AN/FUR/FZP, 2DNFUR 2CN/FUR/FZP ▸ 8882 | E | 1587 | TU5JP,TU5JP4 | A | + | | 03/99 ▸ 03/01 | 125391 | **696073** |
| 2.0 i 16V 2DRFNF, 2ERFNF, 2CR FKA/FNF/FRE | E | 1997 | EW10J4,EW10J4S | M | + | | 04/99 ▸ 02/09 | 1253C9 | **696071** |
| 2.0 i 16V 2DRFNF, 2ERFNF, 2CR FKA/FNF 8883 ▸ | E | 1997 | EW10J4,EW10J4S | M | + | | 03/01 ▸ 02/09 | 1253C5 | **696069** |
| 2.0 i 16V 2DRFNF, 2CR/FNF/FRE ▸ 8882 | E | 1997 | EW10J4 | M | + | | 04/99 ▸ 03/01 | 125391 | **696073** |
| 2.0 i 16V 2DRFNF, 2ERFNF, 2CR FNF/FRE | E | 1997 | EW10J4 | M | - | | 04/99 ▸ 02/09 | 125383 | **•696368** |
| 1.6 i,1.6 i 16V 2AN/FUF/FUU/FZE/FZW 2CN/FUF/FUU/FZE/FZW, 2HNFUA, 2DN/FU/FUA/FUF 2JN/FUA/FUF, 2KN/FUA/FUF | E | 1587 | TU5JP,TU5JP4 | M | - | | 09/98 ▸ 2010 | 125383 | **•696368** |
| 1.6 i,1.6 i 16V 2AN/FUR/FZP, 2CN/FUR FZP, 2DN/FU/FUB/FUR, 2HN/FUB/FUR, 2JN/FUB FUR, 2KN/FUB/FUR | E | 1587 | TU5JP,TU5JP4 | A | - | | 03/99 ▸ 2010 | 125383 | **•696368** |
| 1.4 HDi 2A8/HXF/HZA/HZF, 2C8 HXF/HZA/HZF, 2S8HXF, 2E8/HXF/HZA/HZF | D | 1398 | DV4TD | M | + | | 03/02 ▸ 02/09 | 1253C9 | **696071** |
| 1.4 HDi 2A8/HXF/HZA/HZF, 2C8 HXF/HZA/HZF, 2S8HXF, 2E8/HXF/HZA/HZF | D | 1398 | DV4TD | M | - | | 03/02 ▸ 02/09 | 125383 | **•696368** |
| 1.9 D 2AW/JYF/JYU/JZT/JZW, 2CW/JYF/JZT/JZW, 2SW JYU/JZW, 2TW/JYU/JZW | D | 1868 | DW8,DW8B | M | + | | 09/98 ▸ 02/09 | 1253C9 | **696071** |
| 1.9 D 2AW/JYF/JZT/JZW, 2CW/JYF/JZT/JZW, 2SW/JYU JZW, 2TW/JYU/JZW | D | 1868 | DW8,DW8B | M | + | | 09/98 ▸ 02/09 | 1253E0 | |
| 1.9 D 2AW/JYF/JYU/JZT/JZW, 2CW/JYF/JZT/JZW, 2SW JYU/JZW, 2TW/JYU/JZW 8883 ▸ | D | 1868 | DW8,DW8B | M | + | | 03/01 ▸ 02/09 | 1253C5 | **696069** |
| 1.9 D 2AW/JYF/JZT/JZW, 2CW/JYF/JZT/JZW, 2SW/JYU JZW, 2TW/JYU/JZW 8883 ▸ | D | 1868 | DW8,DW8B | M | + | | 03/01 ▸ 02/09 | 1253C7 | **696070** |

# PEUGEOT (.../...)

## 206 (.../...)

| | | | | | | | | | | |
|---|---|---|---|---|---|---|---|---|---|---|
| 1.9 D | 2AW/JYF/JZT/JZW, 2CW/JYF/JZT/JZW, 2SW/JYU JZW, 2TW/JYU/JZW ▸ 8882 | D | 1868 | DW8,DW8B | M | + | | 09/98 ▸ 03/01 | 125391 | **696073** |
| 1.9 D | 2AW/JYF/JYU/JZT/JZW, 2CW/JYF/JZT/JZW, 2SW JYU/JZW, 2TW/JYU/JZW | D | 1868 | DW8,DW8B | M | - | | 09/98 ▸ 02/09 | 125383 | •**696368** |
| 2.0 HDi | 2AR/HYE/HYF/HYU 2ERHYF, 2HRHYF, 2KRHYF, 2SRHYE, 2CR/HYE/HYF HYU/HYX | D | 1997 | DW10TD | M | + | | 09/99 ▸ 06/08 | 1253E0 | |
| 2.0 HDi | 2AR/HYE/HYF/HYU 2ERHYF, 2HRHYF, 2KRHYF, 2SRHYE, 2CR/HYE/HYF HYU/HYX | D | 1997 | DW10TD | M | + | | 09/99 ▸ 06/08 | 1253C9 | **696071** |
| 2.0 HDi | 2AR/HYE/HYF/HYU 2ERHYF, 2HRHYF, 2KRHYF, 2SRHYE, 2CR/HYE/HYF HYU/HYX 8883 ▸ | D | 1997 | DW10TD | M | + | | 03/01 ▸ 06/08 | 1253C7 | **696070** |
| 2.0 HDi | 2AR/HYE/HYF/HYU 2HRHYF, 2SRHYE, 2CR/HYE/HYF/HYU/HYX ▸ 8882 | D | 1997 | DW10TD | M | + | | 09/99 ▸ 03/01 | 125392 | **696074** |
| 2.0 HDi | 2AR/HYE/HYF/HYU 2ERHYF, 2HRHYF, 2KRHYF, 2SRHYE, 2CR/HYE/HYF HYU/HYX | D | 1997 | DW10TD | M | - | | 09/99 ▸ 06/08 | 125383 | •**696368** |

## 305

| | | | | | | | | | | |
|---|---|---|---|---|---|---|---|---|---|---|
| 1.1 | 581/AA1/DA1/EA1/MA1 | E | 1127 | XK5 | M | + | C | 11/77 ▸ 02/88 | 6455J2 | |
| 1.3 | 581/A01/D01/E01/M01/T01/U10 | E | 1290 | XL5 | M | + | C | 11/77 ▸ 06/90 | 6455J2 | |
| 1.5 | 581/A11/A12/A21/AC1/D11/E11/E14/M11/U11 | E | 1472 | XR5,XR5A,XR5S | M | + | C | 11/77 ▸ 06/90 | 6455J2 | |

## 306 (93>97)

| | | | | | | | | | | |
|---|---|---|---|---|---|---|---|---|---|---|
| 1.1 i | 7AH/DY2/DZ2, 7CH/DY2/DZ2, 7SH/DY2/DZ2 | E | 1124 | TU1M,TU1M+ | M | + | | 02/93 ▸ 02/97 | 125366 | |
| 1.4,1.4 i | 7AK/2D2/3A2/DX2/DX9 7BK/2D2/2D9/3A2/DX2/DX9/FX2, 7CK/2D2/DX2 DX9, 7SK/2D2/DX2 | E | 1360 | TU3,TU3.2,TU3JP,TU3MC | M | + | | 02/93 ▸ 02/97 | 125366 | |
| 1.6 i | 7AN/FZ2/FZ9, 7BN/FZ2/FZ9, 7DNFZ2, 7CN/FZ2 FZ9 | E | 1587 | TU5JP | M | + | | 02/93 ▸ 02/97 | 125366 | |
| 1.8 i | 7AL/6A2/6A9/FZ2/FZ8/FZ9, 7BL/6A2/6A9/FZ2/FZ8 FZ9, 7CL/FZ2/FZ8/FZ9, 7DL/6A2/FZ2/FZ8 | E | 1761 | XU7JP | M | + | | 02/93 ▸ 02/97 | 125366 | |
| 1.8 i | 7AL/6A4/FZ4, 7CLFZ4, 7BL/6A4/FZ4, 7DL/6A4 FZ4 | E | 1761 | XU7JP | A | +/- | | 06/93 ▸ 02/97 | 125366 | |
| 1.8 i | 7AL/6A4/FZ4, 7CLFZ4, 7BL/6A4/FZ4, 7DL/6A4 FZ4 | E | 1761 | XU7JP | A | - | | 06/93 ▸ 02/97 | 125364 | |
| 2.0 i | 7AR/6D2/FX2/FX8, 7BR/FX2/FX8, 7CR/6D2/FX2 FX8, 7DR/6D2/FX2 | E | 1998 | XU10J2,XU10J2C | M | - | | 06/93 ▸ 02/97 | 125366 | |
| 2.0 i,2.0 i 16V | 7AR/FT2/FV2/FY2, 7CR FS2/FT2/FV2/FY2 | E | 1998 | XU10J4,XU10J4R,XU10J4RS | M | | | 09/93 ▸ 02/97 | 125366 | |
| 2.0 i | 7ARFX4, 7DRFX4 | E | 1998 | XU10J2 | A | + | | 09/93 ▸ 02/97 | 125364 | |
| 2.0 i | 7BRFX4, 7CRFX4, 7DRFX4, 7AR/FX4 | E | 1998 | XU10J2,XU10J2C | A | - | | 09/93 ▸ 02/97 | 125366 | |
| 2.0 i | 7CRFX4, 7DRFX4, 7BR/FX4 | E | 1998 | XU10J2,XU10J2C | A | - | | 09/93 ▸ 02/97 | 125364 | |
| 1.8 D | 7CA9A2, 7SA9A2, 7AA/9A2 | D | 1769 | XUD7 | M | - | | 06/93 ▸ 02/97 | 125366 | |
| 1.8 D | 7CA9A2, 7SA9A2, 7AA/9A2 | D | 1769 | XUD7 | M | - | | 06/93 ▸ 02/97 | 125363 | **698444** |
| 1.9 D | 7AD/9B2/JY2/JZ2, 7BD/9B2/JY2, 7CD/9B2/JY2 JZ2, 7SD/9B2/JY2/JZ2 | D | 1905 | XUD9,XUD9A | M | - | | 06/93 ▸ 02/97 | 125363 | **698444** |
| 1.9 D | 7AD/9B2/JY2/JZ2, 7BD/9B2/JY2, 7CD/9B2/JY2 JZ2, 7SD/9B2/JY2/JZ2 | D | 1905 | XUD9,XUD9A | M | - | | 06/93 ▸ 02/97 | 125366 | |

## 306 (97>2002)

| | | | | | | | | | | |
|---|---|---|---|---|---|---|---|---|---|---|
| 1.4 i,1.4 i GPL | 7AK/FWF/FXE/FXT/FXW 7BK/FWF/FXE/FXT/FXW, 7CK/FWF/FXE/FXW 7SKFXE, 7EK/FWF/FXE/FXT/FXW | E | 1360 | TU3JP | M | - | | 03/97 ▸ 03/02 | 125363 | **698444** |
| 1.6 i | 7AN/FTF/FZE/FZW, 7CNFZE, 7BN/FTF/FZ8/FZE/FZW 7DN/FTF/FZE, 7EN/FTF/FZE/FZW | E | 1587 | TU5JP,TU5JP+ | M | - | | 03/97 ▸ 09/02 | 125363 | **698444** |
| 1.6 i | 7BNFTR, 7DNFTR, 7ENFTR, 7AN/FTR | E | 1587 | TU5JP | A | - | | 09/00 ▸ 09/02 | 125363 | **698444** |
| 1.8 i 16V,1.8 i GPL 16V | 7AL/FYE/FYF/FYT/FYW 7BL/FYE/FYF/FYT/FYW, 7CL/FYE/FYF, 7DL/FYE FYT, 7EL/FYE/FYF/FYT/FYW | E | 1761 | XU7JP4 | M | - | | 03/97 ▸ 09/02 | 125363 | **698444** |
| 1.8 i | 7BL/6A4/FZ4/FZP, 7EL/6A4/FZP | E | 1761 | XU7JP | A | - | | 03/97 ▸ 03/02 | 125364 | |

Fan Motor + Blades Moteur + hélice Lüftermotor + Lüfterrad Motorino + Ventola Ventilatormotor Fan motoru + Kanatlar
Moto-ventilador + Aspas Мотор вентилятора + лопасти вентилятора Ventilátor motor és lapát Motor sahary + vrtule Ventilator motor + Lame Μοτέρ ανεμιστήρων + Πτερωτές



• **New** Nouveau **Nuevo** Novo **Nuovo** Nieuw **Neu** Nowość **Yeni** Новый Νέο **Novy**

| Type Ctr. | | CC | | AC | | | OE | Valeo | |
|---|---|---|---|---|---|---|---|---|---|

# PEUGEOT (.../...)

## 306 (97>2002) (.../...)

| | | | | | | | | | |
|---|---|---|---|---|---|---|---|---|---|
| 1.8 i,1.8 i 16V<br>1.8 i GPL 16V<br>7AL/6A2/FYE/FYT/FYW<br>7BL/6A2/FYE/FYF/FYT<br>FYW/FZW, 7CL/6A2/FYE, 7DL/6A2/FYE/FYT, 7EL<br>6A2/FYE/FYF/FYT/FYW<br>▸ 7811 | E | 1761 | XU7JP,XU7JP4 | M | + | | 03/97 ▸ 03/98 | 125366 | |
| 1.8 i<br>7AL/6A4/FZP, 7CLFZP, 7DLFZP, 7BL/6A4/FZ4/FZP<br>7EL/6A4/FZP<br>▸ 7811 | E | 1761 | XU7JP | A | + | | 03/97 ▸ 03/98 | 125366 | |
| 2.0 i 16V<br>7CRFSH | E | 1998 | XU10J4RS | M | +/- | | 03/97 ▸ 02/02 | 125366 | |
| 2.0 i 16V<br>7BR/FVE, 7ERFVE, 7DR<br>6E2/FVE | E | 1998 | XU10J4R | M | + | | 03/97 ▸ 09/02 | 125366 | |
| 2.0 i 16V<br>7BRFVE, 7AR/FVE, 7CR<br>6E2/FVE, 7ERFVE, 7DR/6E2/FVE | E | 1998 | XU10J4R | M | - | | 03/97 ▸ 09/02 | 125363 | **698444** |
| 2.0 i 16V<br>7BR/FVP/FVW, 7DR/FVP<br>FVW, 7ER/FVP/FVW | E | 1998 | XU10J4R | A | + | | 03/97 ▸ 09/02 | 125366 | |
| 2.0 i 16V<br>7AR/FVP, 7CRFVP, 7BR<br>FVP/FVW, 7DR/FVP/FVW, 7ER/FVP/FVW | E | 1998 | XU10J4R | A | - | | 03/97 ▸ 09/02 | 125364 | |
| 1.8 D<br>7CA9AT, 7SA9AE, 7AA/9AT | D | 1769 | XUD7 | M | + | | 03/97 ▸ 02/02 | 1250F0 | **698375** |
| 1.8 D<br>7CA9AT, 7SA9AE, 7AA/9AT | D | 1769 | XUD7 | M | - | | 03/97 ▸ 02/02 | 1250F1 | |
| 1.9 D<br>7BWJZT, 7CWJZT, 7EWJZT, 7AW/JZT | D | 1868 | DW8 | M | +/- | | 11/98 ▸ 03/02 | 1250F0 | **698375** |
| 1.9 D<br>7BWJZT, 7CWJZT, 7EWJZT, 7AW/JZT | D | 1868 | DW8 | M | - | | 11/98 ▸ 03/02 | 1250E9 | |
| 1.9 TD<br>7CDHYE, 7EDHYE, 7AD<br>8AD/HYE | D | 1905 | XUD9TE | M | + | | 03/97 ▸ 03/02 | 1250F1 | |
| 1.9 D,1.9 SD<br>7AD/9BD/HVE/JYE/JYT<br>7BD/9BD/HVE/JYE/JYT, 7CD/HVE/JYE, 7ED/9BD<br>HVE/JYE/JYT, 7SD/JYE/JYT | D | 1905 | XUD9A,XUD9BSD | M | + | | 03/97 ▸ 03/02 | 1250F0 | **698375** |
| 1.9 TD<br>7AD/8AD/HYE, 7CDHYE<br>7EDHYE, 7BD/8AD/HYE | D | 1905 | XUD9TE | M | - | | 03/97 ▸ 03/02 | 1250F0 | **698375** |
| 1.9 D,1.9 SD,1.9 TD<br>7AD/9BD/HVE/JYE/JYT<br>7BD/8AD/9BD/HVE/HYE/JYE/JYT, 7CD/HVE/JYE<br>7ED/9BD/HVE/JYE/JYT, 7SD/JYE/JYT | D | 1905 | XUD9A,XUD9BSD,XUD9TE | M | - | | 03/97 ▸ 03/02 | 1250F1 | |

## 307(2001>2005)

| | | | | | | | | | |
|---|---|---|---|---|---|---|---|---|---|
| 1.4 i,1.4 i 16V<br>3AK/6DY/FUB/FWB, 3CK<br>FUB/FWB, 3EK/FUB/FWB | E | 1360 | ET3J4,TU3JP | M | + | | 09/01 ▸ 06/05 | 1253K2 | **696091** |
| 1.4 i,1.4 i 16V<br>3AK/6DY/FUB/FWB, 3CK<br>FUB/FWB, 3EK/FUB/FWB<br>10220 ▸ | E | 1360 | ET3J4,TU3JP | M | + | | 11/04 ▸ | 1253G7 | **696091** |
| 1.4 i,1.4 i 16V<br>3AK/6DY/FUB/FWB, 3CK<br>FUB/FWB, 3EK/FUB/FWB | E | 1360 | ET3J4,TU3JP | M | - | | 09/01 ▸ 06/05 | 1253A9 | **696177** |
| 1.4 i,1.4 i 16V<br>3AK/6DY/FUB/FWB, 3CK<br>FUB/FWB, 3EK/FUB/FWB<br>10164 ▸ 10219 | E | 1360 | ET3J4,TU3JP | M | + | | 09/04 ▸ 10/04 | 1253F8 | **696091** |
| 1.6 i,1.6 i 16V<br>3BNFU, 3AN/6A5/FUB<br>3CN/6A5/FUB, 3EN/FUB/FUC, 3HN/FUB/FUC | E | 1587 | TU5JP4 | M | + | | 03/01 ▸ 06/05 | 1253K2 | **696091** |
| 1.6 i,1.6 i 16V<br>3BNFU, 3AN/6A5/FUB<br>3CN/6A5/FUB, 3EN/FUB/FUC, 3HN/FUB/FUC<br>10220 ▸ | E | 1587 | TU5JP4 | M | + | | 11/04 ▸ | 1253G7 | **696091** |
| 1.6 i,1.6 i 16V<br>3BNFU, 3AN/6A5/FUB<br>3CN/6A5/FUB, 3EN/FUB/FUC, 3HN/FUB/FUC | E | 1587 | TU5JP4 | M | - | C | 03/01 ▸ 06/05 | 1253A9 | **696177** |
| 1.6 i 16V<br>3CNFUE, 3ENFUE, 3AN<br>FUE, 3HN/FUE/FUN | E | 1587 | TU5JP4 | A | + | | 03/01 ▸ 06/05 | 1253K2 | **696091** |
| 1.6 i 16V<br>3CNFUE, 3ENFUE, 3AN<br>FUE, 3HN/FUE/FUN<br>10220 ▸ | E | 1587 | TU5JP4 | A | + | | 11/04 ▸ | 1253G7 | **696091** |
| 1.6 i 16V<br>3CNFUE, 3ENFUE, 3AN<br>FUE, 3HN/FUE/FUN | E | 1587 | TU5JP4 | A | - | C | 03/01 ▸ 06/05 | 1253A9 | **696177** |
| 1.6 i,1.6 i 16V<br>3BNFU, 3AN/6A5/FUB<br>3CN/6A5/FUB, 3EN/FUB/FUC, 3HN/FUB/FUC<br>10164 ▸ 10219 | E | 1587 | TU5JP4 | M | + | | 09/04 ▸ 10/04 | 1253F8 | **696091** |
| 1.6 i 16V<br>3CNFUE, 3ENFUE, 3AN<br>FUE, 3HN/FUE/FUN<br>10164 ▸ 10219 | E | 1587 | TU5JP4 | A | + | | 09/04 ▸ 10/04 | 1253F8 | **696091** |
| 2.0 i 16V<br>3AR/FJC/FN8/FNB, 3BR<br>FKC/FNC, 3CR/FN8/FNB/FNC, 3ER/FJC/FNB/FNC<br>3HR/FJC/FNB/FNC | E | 1997 | EW10A,EW10J4,EW10J4S | M | + | | 03/01 ▸ 06/05 | 1253K2 | **696091** |
| 2.0 i 16V<br>3AR/FN8/FNB, 3BR/FKC<br>FNC, 3CR/FN8/FNB, 3ER/FNB/FNC, 3HR/FNB/FNC<br>10220 ▸ | E | 1997 | EW10J4,EW10J4S | M | + | | 11/04 ▸ | 1253G7 | **696091** |

# PEUGEOT (.../...)

## 307(2001>2005) (.../...)

| Type Ctr. | | CC | | AC | | 2+3 | OE | Valeo |
|---|---|---|---|---|---|---|---|---|
| 2.0 i 16V 3AR/FJC/FN8/FNB, 3BR FKC/FNC, 3CR/FN8/FNB/FNC, 3ER/FJC/FNB/FNC 3HR/FJC/FNB/FNC | E | 1997 | EW10A,EW10J4,EW10J4S | M | - | | 03/01 ▸ 06/05 | 1253A9 | **696177** |
| 2.0 i 16V 3BRFNF, 3AR/FJF/FNE 3CR/FNE/FNF, 3ER/FJF/FNE/FNF, 3HR/FJF/FNE FNF | E | 1997 | EW10A,EW10J4 | A | + | | 03/01 ▸ 06/05 | 1253K2 | **696091** |
| 2.0 i 16V 3BRFNF, 3CRFNE, 3AR FNE, 3ER/FNE/FNF, 3HR/FNE/FNF 10220 ▸ | E | 1997 | EW10J4 | A | + | | 11/04 ▸ | 1253G7 | **696091** |
| 2.0 i 16V 3BRFNF, 3AR/FJF/FNE 3CR/FNE/FNF, 3ER/FJF/FNE/FNF, 3HR/FJF/FNE FNF | E | 1997 | EW10A,EW10J4 | A | - | | 03/01 ▸ 06/05 | 1253A9 | **696177** |
| 2.0 i 16V 3AR/FN8/FNB, 3BR/FKC FNC, 3CR/FN8/FNB, 3ER/FNB/FNC, 3HR/FNB/FNC 10164 ▸ 10219 | E | 1997 | EW10J4,EW10J4S | M | + | | 09/04 ▸ 10/04 | 1253F8 | **696091** |
| 2.0 i 16V 3BRFNF, 3CRFNE, 3AR FNE, 3ER/FNE/FNF, 3HR/FNE/FNF 10164 ▸ 10219 | E | 1997 | EW10J4 | A | + | | 09/04 ▸ 10/04 | 1253F8 | **696091** |
| 1.4 HDi 3A8/HZB, 3E8HZB, 3C8 HZB/HZM | D | 1398 | DV4TD | M | + | | 02/02 ▸ 06/05 | 1253K2 | **696091** |
| 1.4 HDi 3A8/HZB, 3C8/HZB/HZM 10220 ▸ | D | 1398 | DV4TD | M | + | | 11/04 ▸ | 1253G7 | **696091** |
| 1.4 HDi 3A8/HZB, 3E8HZB, 3C8 HZB/HZM | D | 1398 | DV4TD | M | - | | 02/02 ▸ 06/05 | 1253A9 | **696177** |
| 1.4 HDi 3A8/HZB, 3C8/HZB/HZM 10164 ▸ 10219 | D | 1398 | DV4TD | M | + | | 09/04 ▸ 10/04 | 1253F8 | **696091** |
| 1.6 HDi,1.6 HDi 16V 3A9/HXC/HYB/HZB, 3C9 HYB/HZB, 3E9/HYB/HZB, 3H9/HYB/HZB | D | 1560 | DV6ATED4,DV6TED4 | M | + | | 07/04 ▸ 06/05 | 1253K2 | **696091** |
| 1.6 HDi 16V 3C9HYB, 3E9HYB 3H9HYB, 3A9/HYB 10220 ▸ | D | 1560 | DV6TED4 | M | + | | 11/04 ▸ | 1253G7 | **696091** |
| 1.6 HDi,1.6 HDi 16V 3A9/HXC/HYB/HZB, 3C9 HYB/HZB, 3E9/HYB/HZB, 3H9/HYB/HZB | D | 1560 | DV6ATED4,DV6TED4 | M | - | | 07/04 ▸ 06/05 | 1253A9 | **696177** |
| 1.6 HDi 16V 3C9HYB, 3E9HYB 3H9HYB, 3A9/HYB 10164 ▸ 10219 | D | 1560 | DV6TED4 | M | + | | 09/04 ▸ 10/04 | 1253F8 | **696091** |
| 2.0 HDi,2.0 HDi 16V 3AR/HRH/HSB/HYB/HYM 3CR/HRH/HSB/HYB/HYM, 3ER/HRH/HSB/HYB, 3HR HRH/HSB/HYB | D | 1997 | DW10ATED,DW10BTED4,DW10TD | M | + | | 03/01 ▸ 06/05 | 1253K2 | **696091** |
| 2.0 HDi,2.0 HDi 16V 3AR/HRH/HSB/HYB/HYM 3CR/HRH/HSB/HYB/HYM, 3ER/HRH/HSB/HYB, 3HR HRH/HSB/HYB 10220 ▸ | D | 1997 | DW10ATED,DW10BTED4,DW10TD | M | + | | 11/04 ▸ | 1253G7 | **696091** |
| 2.0 HDi,2.0 HDi 16V 3AR/HRH/HSB/HYB/HYM 3CR/HRH/HSB/HYB/HYM, 3ER/HRH/HSB/HYB, 3HR HRH/HSB/HYB | D | 1997 | DW10ATED,DW10BTED4,DW10TD | M | - | | 03/01 ▸ 06/05 | 1253A9 | **696177** |
| 2.0 HDi,2.0 HDi 16V 3AR/HRH/HSB/HYB/HYM 3CR/HRH/HSB/HYB/HYM, 3ER/HRH/HSB/HYB, 3HR HRH/HSB/HYB | D | 1997 | DW10ATED,DW10BTED4,DW10TD | M | + | | 09/04 ▸ 10/04 | 1253F8 | **696091** |

## 307 (2005>)

| | | | | | | | | | |
|---|---|---|---|---|---|---|---|---|---|
| 1.6 i 16V 3ENFUC, 3HNFUC | F | 1587 | TU5JP4 | M | + | | 07/07 ▸ 06/08 | 1253K2 | **696091** |
| 1.6 i 16V 3ENFUC, 3HNFUC 11011 ▸ | F | 1587 | TU5JP4 | M | + | | 07/07 ▸ 06/08 | 1253K4 | **696091** |
| 1.6 i 16V 3ENFUC, 3HNFUC | F | 1587 | TU5JP4 | M | - | | 07/07 ▸ 06/08 | 1253A9 | **696177** |
| 1.4 i 16V 3CKFUC, 3EKFUC 3GKFUC, 3AK/FUC | E | 1360 | ET3J4 | M | + | | 06/05 ▸ 01/08 | 1253K2 | **696091** |
| 1.4 i 16V 3CKFUC, 3EKFUC, 3AK FUC | E | 1360 | ET3J4 | M | + | | 06/05 ▸ | 1253G7 | **696091** |
| 1.4 i 16V 3CKFUC, 3EKFUC, 3AK FUC | E | 1360 | ET3J4 | M | + | | 06/05 ▸ | 1253F8 | **696091** |
| 1.4 i 16V 3CKFUC, 3EKFUC 3GKFUC, 3AK/FUC 11011 ▸ | E | 1360 | ET3J4 | M | + | | 01/07 ▸ 01/08 | 1253K4 | **696091** |
| 1.4 i 16V 3CKFUC, 3EKFUC 3GKFUC, 3AK/FUC | E | 1360 | ET3J4 | M | - | | 06/05 ▸ 01/08 | 1253A9 | **696177** |
| 1.6 i 16V 3BNFUC, 3CNFUL 3ENFUC, 3HNFUC, 3AN/FUL | E | 1587 | TU5JP4 | M | + | | 06/05 ▸ | 1253G7 | **696091** |
| 1.6 i 16V 3BNFUC, 3CNFUL 3ENFUC, 3HNFUC, 3AN/FUL | E | 1587 | TU5JP4 | M | + | | 06/05 ▸ 03/09 | 1253K2 | **696091** |

Fan Motor + Blades Moteur + hélice Lüftermotor + Lüfterrad Motorino + Ventola Ventilatormotor Fan motoru + Kanatlar
Moto-ventilador + Aspas Мотор вентилятора + лопасти вентилятора Ventilátor motor és lapát Motor sahary + vrtule Ventilator motor + Lame Μοτέρ ανεμιστήρων + Πτερωτές



• **New** Nouveau **Nuevo** Novo **Nuovo** Nieuw **Neu** Nowość **Yeni** Новый Νέο **Novy**

## 307 (2005>) (.../...)

| | | CC | | AC | | | OE | Valeo |
|---|---|---|---|---|---|---|---|---|
| 1.6 i 16V 3BNFUC, 3CNFUL 3ENFUC, 3HNFUC, 3AN/FUL | E | 1587 | TU5JP4 | M | + | | 06/05 ▸ | 1253F8 | 696091 |
| 1.6 i 16V 3BNFUC, 3CNFUL 3ENFUC, 3HNFUC, 3AN/FUL 11011 ▸ | E | 1587 | TU5JP4 | M | + | | 01/07 ▸ 03/09 | 1253K4 | 696091 |
| 1.6 i 16V 3BNFUC, 3CNFUL 3ENFUC, 3HNFUC, 3AN/FUL | E | 1587 | TU5JP4 | M | - | | 06/05 ▸ 03/09 | 1253A9 | 696177 |
| 1.6 i 16V 3CNFUF, 3ENFUF 3HNFUF, 3AN/FUF | E | 1587 | TU5JP4 | A | + | | 06/05 ▸ 06/08 | 1253K2 | 696091 |
| 1.6 i 16V 3CNFUF, 3ENFUF 3HNFUF, 3AN/FUF | E | 1587 | TU5JP4 | A | + | | 06/05 ▸ | 1253F8 | 696091 |
| 1.6 i 16V 3CNFUF, 3ENFUF 3HNFUF, 3AN/FUF | E | 1587 | TU5JP4 | A | + | | 06/05 ▸ | 1253G7 | 696091 |
| 1.6 i 16V 3CNFUF, 3ENFUF 3HNFUF, 3AN/FUF 11011 ▸ | E | 1587 | TU5JP4 | A | + | | 01/07 ▸ 06/08 | 1253K4 | 696091 |
| 1.6 i 16V 3CNFUF, 3ENFUF 3HNFUF, 3AN/FUF | E | 1587 | TU5JP4 | A | - | | 06/05 ▸ 06/08 | 1253A9 | 696177 |
| 2.0 i 16V 3ERFJC, 3HRFJC, 3BR FJC | E | 1997 | EW10A | M | + | | 06/05 ▸ | 1253F8 | 696091 |
| 2.0 i 16V 3AR/FJC/FKC, 3BR/FJC FKC, 3ERFJC, 3HRFJC, 3CR/FJC/FKC | E | 1997 | EW10A,EW10J4S | M | + | | 06/05 ▸ 03/09 | 1253K2 | 696091 |
| 2.0 i 16V 3ERFJC, 3HRFJC, 3BR FJC | E | 1997 | EW10A | M | + | | 06/05 ▸ | 1253G7 | 696091 |
| 2.0 i 16V 3AR/FJC/FKC, 3BR/FJC FKC, 3ERFJC, 3HRFJC, 3CR/FJC/FKC 11011 ▸ | E | 1997 | EW10A,EW10J4S | M | + | | 01/07 ▸ 03/09 | 1253K4 | 696091 |
| 2.0 i 16V 3AR/FJC/FKC, 3BR/FJC FKC, 3ERFJC, 3HRFJC, 3CR/FJC/FKC | E | 1997 | EW10A,EW10J4S | M | - | | 06/05 ▸ 03/09 | 1253A9 | 696177 |
| 2.0 i 16V 3BRFJF, 3ERFJF 3HRFJF, 3AR/FJF | E | 1997 | EW10A | A | + | | 06/05 ▸ | 1253F8 | 696091 |
| 2.0 i 16V 3BRFJF, 3ERFJF 3HRFJF, 3AR/FJF | E | 1997 | EW10A | A | + | | 06/05 ▸ 03/09 | 1253K2 | 696091 |
| 2.0 i 16V 3BRFJF, 3ERFJF 3HRFJF, 3AR/FJF | E | 1997 | EW10A | A | + | | 06/05 ▸ | 1253G7 | 696091 |
| 2.0 i 16V 3BRFJF, 3ERFJF 3HRFJF, 3AR/FJF 11011 ▸ | E | 1997 | EW10A | A | + | | 01/07 ▸ 03/09 | 1253K4 | 696091 |
| 2.0 i 16V 3BRFJF, 3ERFJF 3HRFJF, 3AR/FJF | E | 1997 | EW10A | A | - | | 06/05 ▸ 03/09 | 1253A9 | 696177 |
| 1.6 HDi 16V 3A9/HV/HV//HXC/HYB HYC/HZB/HZC, 3C9/HV/HXC/HYB/HZB/HZC, 3E9/HV HXC/HYB/HZB/HZC, 3G9/HXC/HYB, 3H9/HV/HXC/HYB HZB | D | 1560 | DV6ATED4,DV6TED4 | M | + | | 06/05 ▸ | 1253K2 | 696091 |
| 1.6 HDi 16V 3A9/HXC/HYC, 3C9/HXC HYB, 3E9/HXC/HYB, 3H9/HXC/HYB | D | 1560 | DV6ATED4,DV6TED4 | M | + | | 06/05 ▸ | 1253F8 | 696091 |
| 1.6 HDi 16V 3A9/HXC/HYC, 3C9/HXC HYB, 3E9/HXC/HYB, 3H9/HXC/HYB | D | 1560 | DV6ATED4,DV6TED4 | M | + | | 06/05 ▸ | 1253G7 | 696091 |
| 1.6 HDi 16V 3A9/HV/HV//HXC/HYB HYC/HZB/HZC, 3C9/HV/HXC/HYB/HZB/HZC, 3E9/HV HXC/HYB/HZB/HZC, 3G9/HXC/HYB, 3H9/HV/HXC/HYB HZB 11011 ▸ | D | 1560 | DV6ATED4,DV6TED4 | M | + | | 01/07 ▸ | 1253K4 | 696091 |
| 1.6 HDi 16V 3A9/HV/HV//HXC/HYB HYC/HZB/HZC, 3C9/HV/HXC/HYB/HZB/HZC, 3E9/HV HXC/HYB/HZB/HZC, 3G9/HXC/HYB, 3H9/HV/HXC/HYB HZB | D | 1560 | DV6ATED4,DV6TED4 | M | - | | 06/05 ▸ | 1253A9 | 696177 |
| 2.0 HDi 16V 3BRHRH, 3CRHRH 3ERHRH, 3HRHRH, 3AR/HRH | D | 1997 | DW10BTED4 | M | + | | 06/05 ▸ | 1253F8 | 696091 |
| 2.0 HDi 16V 3BRHRH, 3CRHRH 3ERHRH, 3HRHRH, 3AR/HRH | D | 1997 | DW10BTED4 | M | + | | 06/05 ▸ | 1253G7 | 696091 |
| 2.0 HDi,2.0 HDi 16V 3BRHRH, 3AR/HRH/HY 3CR/HRH/HY, 3ER/HRH/HY, 3HR/HRH/HY | D | 1997 | DW10BTED4,DW10TD | M | + | | 06/05 ▸ 03/09 | 1253K2 | 696091 |
| 2.0 HDi,2.0 HDi 16V 3BRHRH, 3AR/HRH/HY 3CR/HRH/HY, 3ER/HRH/HY, 3HR/HRH/HY 11011 ▸ | D | 1997 | DW10BTED4,DW10TD | M | + | | 01/07 ▸ | 1253K4 | 696091 |
| 2.0 HDi,2.0 HDi 16V 3BRHRH, 3AR/HRH/HY 3CR/HRH/HY, 3ER/HRH/HY, 3HR/HRH/HY | D | 1997 | DW10BTED4,DW10TD | M | - | | 06/05 ▸ 03/09 | 1253A9 | 696177 |
| 2.0 HDi 16V 3CRHRJ, 3HRHRJ, 3AR HRJ | D | 1997 | DW10BTED4 | A | + | | 12/06 ▸ 06/08 | 1253K2 | 696091 |

# PEUGEOT (.../...)

## 307 (2005>) (.../...)

| | | CC | | AC | | | OE | Valeo |
|---|---|---|---|---|---|---|---|---|
| 2.0 HDi 16V 3CRHRJ, 3HRHRJ, 3AR HRJ 11011 ▸ | D | 1997 | DW10BTED4 | A | + | 01/07 ▸ 06/08 | 1253K4 | **696091** |
| 2.0 HDi 16V 3CRHRJ, 3HRHRJ, 3AR HRJ | D | 1997 | DW10BTED4 | A | - | 12/06 ▸ 06/08 | 1253A9 | **696177** |

## 308

| | | CC | | AC | | | OE | Valeo |
|---|---|---|---|---|---|---|---|---|
| 1.4 VTi 16V 4C8FSC, 4E8FSC, 4A8 FSC | E | 1397 | EP3 | M | + | 09/07 ▸ | 1253K4 | **696091** |
| 1.6 THP 16V,1.6 VTi 16V 4A5/FWC/FXC/FYH 4E5FWC, 4C5/FWC/FXC/FYH, 4H5/FWC/FXH/FYH | E | 1598 | EP6,EP6DT,EP6DTS | M | + | 09/07 ▸ | 1253K4 | **696091** |
| 1.6 THP 16V,1.6 VTi 16V 4A5/FTF/FWF, 4E5FWF 4C5/FTF/FWF, 4H5/FTF/FWF | E | 1598 | EP6,EP6DT | A | + | 09/07 ▸ | 1253K4 | **696091** |
| 1.6 HDi 16V 4A9/HVC/HXC/HZC/HZH 4C9/HVC/HXC/HZC/HZH, 4E9/HXC/HZH, 4H9/HXC HZH | D | 1560 | DV6ATED4,DV6TED4,DV6TED4B | M | + | 09/07 ▸ | 1253K4 | **696091** |
| 2.0 HDi 16V 4CRHRH, 4HRHRH, 4AR HRH | D | 1997 | DW10BTED4 | M | + | 09/07 ▸ | 1253K4 | **696091** |
| 2.0 HDi 16V 4CRHRJ, 4HRHRJ, 4AR HRJ | D | 1997 | DW10BTED4 | A | + | 09/07 ▸ | 1253K4 | **696091** |

## 406 (95>2003)

| | | CC | | AC | | | OE | Valeo |
|---|---|---|---|---|---|---|---|---|
| 1.6 i 8BB/FZ2/FZD/FZE | E | 1580 | XU5JP | M | + | 10/95 ▸ 03/99 | 1250F0 | **698375** |
| 1.6 i 8BB/FZ2/FZD/FZE | E | 1580 | XU5JP | M | - | 10/95 ▸ 03/99 | 1250E9 | |
| 1.6 i 8BBFZ2 | E | 1580 | XU5JP | M | | 10/95 ▸ 03/99 | 1250E9 | |
| 1.8 i,1.8 i 16V 8CLFYE, 8BL/6A2/FXE 1.8 i GPL 16V FY2/FY8/FYD/FYE/FYS FYT/FYW, 8EL/6A2/FXE/FYE/FYT/FYW, 8FL/FXE FYE/FYT | E | 1761 | XU7JB,XU7JP,XU7JP4 | M | + | 10/95 ▸ 03/99 | 1250F0 | **698375** |
| 1.8 i,1.8 i 16V 8CLFYE, 8BL/FXE/FY2 1.8 i GPL 16V FYD/FYE/FYS/FYT/FYW 8EL/6A2/FXE/FYE/FYT/FYW, 8FL/FXE/FYE/FYT | E | 1761 | XU7JB,XU7JP,XU7JP4 | M | - | 10/95 ▸ 03/99 | 1250E9 | |
| 1.8 i,1.8 i 16V 8BL/6A2/FY2/FY8 | E | 1761 | XU7JP,XU7JP4 | M | | 10/95 ▸ 03/99 | 1250E9 | |
| 1.8 i 16V 8ELFYP, 8FLFYP, 8BL FYP | E | 1761 | XU7JP4 | A | + | 07/96 ▸ 03/99 | 1250F0 | **698375** |
| 2.0 i 16V 8CRFNA | E | 1997 | EW10J4 | M | | 07/00 ▸ 04/03 | 1250F0 | **698375** |
| 2.0 i 16V 8CRFNR | E | 1997 | EW10J4 | A | | 07/00 ▸ 04/03 | 1250F0 | **698375** |
| 2.0 i Turbo 8ERGXE, 8BR/GX2/GXE | E | 1998 | XU10J2TE | M | +/- | 07/96 ▸ 03/99 | 1250F1 | |
| 2.0 i 16V 8BR/6E2/FV2/FVD/FVE FVW, 8CR/FV2/FVE, 8FRFVE, 8ER/6E2/FVE/FVW | E | 1998 | XU10J4R | M | + | 10/95 ▸ 03/99 | 1250F0 | **698375** |
| 2.0 i 16V 8BR/6E2/FVD/FVE/FVW 8CR/FV2/FVE, 8FRFVE, 8ER/6E2/FVE/FVW | E | 1998 | XU10J4R | M | - | 10/95 ▸ 03/99 | 1250E9 | |
| 2.0 i 16V 8BRFV2 | E | 1998 | XU10J4R | M | | 10/95 ▸ 03/99 | 1250E9 | |
| 2.0 i 16V 8BR/6E4/FV4 | E | 1998 | XU10J4R | A | + | 10/95 ▸ 03/99 | 1250F0 | **698375** |
| 2.0 i 16V 8BR/FV4/FVN/FVP, 8CR FV8/FVP/FVT, 8FRFVP, 8ER/6E2/FVP | E | 1998 | XU10J4R | A | - | 10/95 ▸ 03/99 | 1250F0 | **698375** |
| 2.0 i 16V 8BR/6E4/FV4 | E | 1998 | XU10J4R | A | | 10/95 ▸ 03/99 | 1250E9 | |
| 2.2 i 16V 8C3FZA | E | 2230 | EW12J4 | M | +/- | 03/02 ▸ 04/03 | 1250F1 | |
| 3.0 i V6 24V 8BX/FZ2/FZE, 8EXFZE 8CX/FX9/FXA/FXF/FZE | E | 2946 | ES9J4,ES9J4S | M | +/- | 10/96 ▸ 04/03 | 1250F1 | |
| 3.0 i V6 24V 8BX/FZ4/FZP, 8EXFZP 8CX/FX3/FX6/FXB/FXR/FZ4/FZP | E | 2946 | ES9J4,ES9J4S | A | +/- | 10/96 ▸ 04/03 | 1250F1 | |
| 1.9 TD 8BDHVF | D | 1905 | XUD9BSD | M | +/- | 05/98 ▸ 03/99 | 1250F1 | |
| 1.9 TD 8BD/HX2/HXE, 8ED/HX2 HXE | D | 1905 | XUD9BTF | M | + | 11/95 ▸ 03/99 | 1250F1 | |
| 1.9 TD 8BD/8BD/HX2/HXE 8FDHXE, 8ED/8BD/HX2/HXE | D | 1905 | XUD9BTF,XUD9TE | M | + | 11/95 ▸ 03/99 | 125354 | |
| 1.9 TD 8EDHWE, 8FDHWE, 8BD HWE | D | 1905 | XUD9SD | M | + | 07/96 ▸ 03/99 | 1250F0 | **698375** |
| 1.9 TD 8BD/8B2/8BD/HWE, 8ED 8BD/HWE, 8FD/HWE/HXE | D | 1905 | XUD9BTF,XUD9SD,XUD9TE | M | - | 07/96 ▸ 03/99 | 1250F1 | |
| 1.9 TD 8BDHXP, 8EDHXP | D | 1905 | XUD9BTF | A | + | 03/97 ▸ 03/99 | 1250F1 | |
| 1.9 TD 8BDHXP, 8FDHXP | D | 1905 | XUD9BTF | A | + | 03/97 ▸ 03/99 | 125354 | |
| 1.9 TD 8FDHXP 7602 ▸ | D | 1905 | XUD9BTF | A | - | 09/97 ▸ 03/99 | 1250F1 | |
| 1.9 TD 8BD8B2 ▸ 7601 | D | 1905 | XUD9TE | M | - | 11/95 ▸ 09/97 | 125354 | |
| 1.9 TD 8EDHXP ▸ 7601 | D | 1905 | XUD9BTF | A | - | 03/97 ▸ 09/97 | 125354 | |

Fan Motor + Blades Moteur + hélice Lüftermotor + Lüfterrad Motorino + Ventola Ventilatormotor Fan motoru + Kanatlar
Moto-ventilador + Aspas Мотор вентилятора + лопасти вентилятора Ventilátor motor és lapát Motor sahary + vrtule Ventilator motor + Lame Motér ανεμιστήρων + Πτερωτές



• **New** Nouveau **Nuevo** Novo **Nuovo** Nieuw **Neu** Nowość **Yeni** Новый Νέο **Novy**

# PEUGEOT (.../...)

## 406 (95>2003) (.../...)

| | | | CC | | AC | | | | OE | Valeo | |
|---|---|---|---|---|---|---|---|---|---|---|---|
| 2.0 HDi | 8ERHZE, 8FRHZE, 8BRHZE | D | 1997 | DW10ATED | M | + | | 10/98 ▸ 03/99 | 1250F0 | **698375** | |
| 2.0 HDi | 8ERHZE, 8FRHZE, 8BRHZE | D | 1997 | DW10ATED | M | - | | 10/98 ▸ 03/99 | 1250F1 | | |
| 2.1 TD | 8EP8CE, 8FP8CE, 8BP8C2/8CD/8CE | D | 2088 | XUD11BTE | M | + | | 11/95 ▸ 03/99 | 125354 | | |
| 2.1 TD | 8EP8CE, 8FP8CE, 8BP8C2/8CD/8CE | D | 2088 | XUD11BTE | M | - | | 11/95 ▸ 03/99 | 1250F1 | | |
| 2.1 TD | 8EP8CE, 8FP8CE, 8BP8CD/8CE | D | 2088 | XUD11BTE | M | - | | 09/97 ▸ 03/99 | 1250F0 | **698375** | |

## 406 (99>2004)

| | | | CC | | AC | | | | OE | Valeo | |
|---|---|---|---|---|---|---|---|---|---|---|---|
| 1.6 i | 8BBFZE | E | 1580 | XU5JP | M | - | Left/gauche | 04/99 ▸ 03/04 | 1250E9 | | |
| 1.8 i 16V,1.8 i GPL 16V | 8E6FZF, 8F6FZF, 8B6FZF | E | 1749 | EW7J4 | M | + | C | 10/00 ▸ 04/04 | 1250G0 | **696174** | |
| 1.8 i 16V | 8B6/FZR, 8F6FZR, 8E6FZF/FZR | E | 1749 | EW7J4 | A | + | C | 10/00 ▸ 04/04 | 1250G0 | **696174** | |
| 1.8 i,1.8 i 16V<br>1.8 i GPL 16V | 8BL/6A2/FXE/FYE/FYFFYT/FYW, 8EL/FXE/FYEFYT, 8FL/FXE/FYE | E | 1761 | XU7JB,XU7JP,XU7JP4 | M | - | Left/gauche | 04/99 ▸ 04/04 | 1250E9 | | |
| 2.0 HPi 16V,2.0 i 16V | 8BR/FNA/FRE/LZF, 8ERFNA/FRE/LZF, 8FR/FNA/FRE | E | 1997 | EW10D,EW10J4 | M | + | C | 11/99 ▸ 04/04 | 1250G0 | **696174** | |
| 2.0 i 16V<br>8421 ▸ | 8ERFNR, 8FRFNR, 8BRFNR/FRR | E | 1997 | EW10J4 | A | + | C | 11/99 ▸ 04/04 | 1250G0 | **696174** | |
| 2.0 i 16V<br>▸ 8420 | 8ERFRE, 8FRFRE, 8BRFRE | E | 1997 | EW10J4 | M | + | C | 04/99 ▸ 11/99 | 1250F4 | **696174** | |
| 2.0 i 16V<br>▸ 8420 | 8BRFRR | E | 1997 | EW10J4 | A | + | C | 06/99 ▸ 11/99 | 1250F4 | **696174** | |
| 2.0 i 16V | 8ERFV2, 8BR/FV2/FVW | E | 1998 | XU10J4R | M | +/- | | 04/99 ▸ 04/04 | 1250F0 | **698375** | |
| 2.0 i 16V | 8ERFV4, 8BR/FV4/FVT | E | 1998 | XU10J4R | A | +/- | | 04/99 ▸ 04/04 | 1250F0 | **698375** | |
| 2.2 i 16V | 8B3/FZE/FZF, 8E3/FZEFZF | E | 2230 | EW12J4 | M | + | C | 05/00 ▸ 04/04 | 1250G0 | **696174** | |
| 3.0 24V,3.0 i V6 24V | 8CXFXA, 8BX/FXA/FXFFZE, 8EX/FXA/FXF/FZE | E | 2946 | ES9J4,ES9J4S | M | + | | 04/99 ▸ 10/04 | 1250F1 | | |
| 3.0 24V,3.0 i V6 24V | 8CXFXB, 8BX/FXB/FXRFZP, 8EX/FXB/FXR/FZP | E | 2946 | ES9J4,ES9J4S | A | + | | 04/99 ▸ 10/04 | 1250F1 | | |
| 2.0 HDi<br>▸ 8420 | 8BR/HYE/HYF/HZE/HZF8ER/HYE/HZE | D | 1997 | DW10ATED,DW10TD | M | +/- | C | 04/99 ▸ 11/99 | 1250F4 | **696174** | |
| 2.0 HDi<br>▸ 8996 | 8BRHZR, 8ERHZR | D | 1997 | DW10ATED | A | +/- | C | 01/01 ▸ 06/01 | 1250G0 | **696174** | |
| 2.0 HDi<br>8421 ▸ 8996, 9191 | 8BR/HYE/HYF/HZE/HZF8ER/HYE/HYF/HZE/HZF, 8FR/HYF/HZF | D | 1997 | DW10ATED,DW10TD | M | +/- | C | 11/99 ▸ 11/02 | 1250G0 | **696174** | |
| 2.0 HDi<br>9002, 8997 ▸ 9149, 9155 | 8BR/HSF/HZE/HZF, 8ERHSF/HZE/HZF, 8FR/HSF/HZF | D | 1997 | DW10ATED | M | +/- | C | 06/01 ▸ 12/01 | 1250F8 | **696138** | |
| 2.0 HDi<br>8997 ▸ 9155 | 8BRHZR, 8ERHZR | D | 1997 | DW10ATED | A | +/- | C | 06/01 ▸ 12/01 | 1250F8 | **696138** | |
| 2.0 HDi<br>▸ 9191 | 8BR/HYE/HYF, 8FRHYF8ER/HYE/HYF | D | 1997 | DW10TD | M | + | C | 04/99 ▸ 01/02 | 1250F8 | **696138** | |
| 2.2 HDi 16V | 8B4HXF, 8E4HXF | D | 2179 | DW12TED4 | M | + | C | 10/00 ▸ 12/01 | 1250F8 | **696138** | |

## 607 (2000>2004)

| | | | CC | | AC | | | | OE | Valeo | |
|---|---|---|---|---|---|---|---|---|---|---|---|
| 2.0 i 16V | 9DR/FN5/FNB | E | 1997 | EW10J4 | M | + | | 05/00 ▸ 09/04 | 1250F8 | **696138** | |
| 2.0 i 16V | 9DRFNC | E | 1997 | EW10J4 | M | | | 01/02 ▸ 09/04 | 1250F8 | **696138** | |
| 2.2 i 16V | 9D3/FZB/FZC | E | 2230 | EW12J4 | M | + | | 05/00 ▸ 09/04 | 1250F8 | **696138** | |
| 2.2 i 16V | 9D3/FZB/FZC | E | 2230 | EW12J4 | M | | | 01/02 ▸ 09/04 | 1250F8 | **696138** | |
| 2.2 i 16V | 9D3/FZ2/FZ6/FZE | E | 2230 | EW12J4 | A | + | | 05/00 ▸ 09/04 | 1250F8 | **696138** | |
| 3.0 i V6 24V | 9DXFX5 | E | 2946 | ES9J4S | M | + | | 05/00 ▸ 09/04 | 1250F8 | **696138** | |
| 3.0 i V6 24V | 9DXFXC | E | 2946 | ES9J4S | M | | | 01/02 ▸ 09/04 | 1250F8 | **696138** | |
| 3.0 i V6 24V | 9DX/FX2/FX6 | E | 2946 | ES9J4S | A | + | | 05/00 ▸ 09/04 | 1250F8 | **696138** | |
| 2.0 HDi | 9DRHZB | D | 1997 | DW10ATED | M | + | | 05/00 ▸ 09/04 | 1250F8 | **696138** | |
| 2.0 HDi | 9DR/HSB/HZB | D | 1997 | DW10ATED | M | | | 01/02 ▸ 09/04 | 1250F8 | **696138** | |
| 2.2 HDi 16V | 9D4HXB | D | 2179 | DW12TED4 | M | + | | 05/00 ▸ 06/03 | 1250F8 | **696138** | |
| 2.2 HDi 16V | 9D4HXB | D | 2179 | DW12TED4 | M | | | 01/02 ▸ 06/03 | 1250F8 | **696138** | |

# PEUGEOT (.../...)

## 607 (2000>2004) (.../...)

| | | | CC | | | AC | | | OE | Valeo |
|---|---|---|---|---|---|---|---|---|---|---|
| 2.2 HDi 16V | 9D4HXE | D | 2179 | DW12TED4 | A | + | | 09/00 ▸ 09/04 | 1250F8 | **696138** |

## 806 (98>2002)

| | | | | | | | | | | |
|---|---|---|---|---|---|---|---|---|---|---|
| 2.0 HDi | AFRHZA | D | 1997 | DW10ATED | M | +/- | C | 08/99 ▸ 05/02 | 1253F1 | **698542** |
| 2.0 HDi | AFRHZA | D | 1997 | DW10ATED | M | +/- | C | 08/99 ▸ 05/02 | 125394 | **698542** |

## 807

| | | | | | | | | | | |
|---|---|---|---|---|---|---|---|---|---|---|
| 2.0 i 16V | EAR/FNC, EBR/FJC/FNC | E | 1997 | EW10A,EW10J4 | M | +/- | | 06/02 ▸ | 1250G2 | **696132** |
| 2.0 i 16V | EAR/FNC, EBR/FJC/FNC | E | 1997 | EW10A,EW10J4 | M | +/- | | 06/02 ▸ | 1253K1 | **696132** |
| 2.0 i 16V | EAR/FNC, EBR/FJC/FNC | E | 1997 | EW10A,EW10J4 | M | +/- | | 06/02 ▸ | 1250G5 | **696139** |
| 2.0 i 16V | EAR/FNC, EBR/FJC/FNC | E | 1997 | EW10A,EW10J4 | M | + | | 06/02 ▸ | 1250G7 | **696142** |
| 2.0 i 16V | EAR/FNC, EBR/FJC/FNC | E | 1997 | EW10A,EW10J4 | M | + | | 06/02 ▸ | 1253P7 | **696142** |
| 2.0 i 16V | EBR/FJF/FNF | E | 1997 | EW10A,EW10J4 | A | +/- | | 06/02 ▸ | 1253K1 | **696132** |
| 2.0 i 16V | EBR/FJF/FNF | E | 1997 | EW10A,EW10J4 | A | +/- | | 06/02 ▸ | 1250G5 | **696139** |
| 2.0 i 16V | EBR/FJF/FNF | E | 1997 | EW10A,EW10J4 | A | +/- | | 06/02 ▸ | 1250G2 | **696132** |
| 2.0 i 16V | EBR/FJF/FNF | E | 1997 | EW10A,EW10J4 | A | + | | 06/02 ▸ | 1253P7 | **696142** |
| 2.0 i 16V | EBR/FJF/FNF | E | 1997 | EW10A,EW10J4 | A | + | | 06/02 ▸ | 1250G7 | **696142** |
| 2.0 i 16V ▸ 9338 | EBRFNC | E | 1997 | EW10J4 | M | + | | 06/02 ▸ 06/02 | 1250G6 | **696142** |
| 2.0 i 16V ▸ 9338 | EBRFNF | E | 1997 | EW10J4 | A | + | | 06/02 ▸ 06/02 | 1250G6 | **696142** |
| 2.2 i 16V | EA3FZC, EB3FZC | E | 2230 | EW12J4 | M | +/- | | 06/02 ▸ 09/05 | 1250G2 | **696132** |
| 2.2 i 16V | EA3FZC, EB3FZC | E | 2230 | EW12J4 | M | +/- | | 06/02 ▸ 09/05 | 1253K1 | **696132** |
| 2.2 i 16V | EA3FZC, EB3FZC | E | 2230 | EW12J4 | M | +/- | | 06/02 ▸ 09/05 | 1250G5 | **696139** |
| 2.2 i 16V | EA3FZC, EB3FZC | E | 2230 | EW12J4 | M | + | | 06/02 ▸ 09/05 | 1253P7 | **696142** |
| 2.2 i 16V | EA3FZC, EB3FZC | E | 2230 | EW12J4 | M | + | | 06/02 ▸ 09/05 | 1250G7 | **696142** |
| 2.2 i 16V ▸ 9338 | EB3FZC | E | 2230 | EW12J4 | M | + | | 06/02 ▸ 06/02 | 1250G6 | **696142** |
| 3.0 i V6 24V | EAXFWF, EBXFWF | E | 2946 | ES9J4S | A | +/- | | 06/02 ▸ 09/05 | 1253K1 | **696132** |
| 3.0 i V6 24V | EAXFWF, EBXFWF | E | 2946 | ES9J4S | A | +/- | | 06/02 ▸ 09/05 | 1250G5 | **696139** |
| 3.0 i V6 24V | EAXFWF, EBXFWF | E | 2946 | ES9J4S | A | +/- | | 06/02 ▸ 09/05 | 1250G2 | **696132** |
| 3.0 i V6 24V | EAXFWF | E | 2946 | ES9J4S | A | + | | 06/02 ▸ 09/05 | 1250G5 | **696139** |
| 3.0 i V6 24V | EAXFWF, EBXFWF | E | 2946 | ES9J4S | A | + | | 06/02 ▸ 09/05 | 1250G7 | **696142** |
| 3.0 i V6 24V | EAXFWF, EBXFWF | E | 2946 | ES9J4S | A | + | | 06/02 ▸ 09/05 | 1253P7 | **696142** |
| 3.0 i V6 24V ▸ 09338 | EBXFWF | E | 2946 | ES9J4S | A | + | | 06/02 ▸ 06/02 | 1250G6 | **696142** |
| 2.0 HDi 16V | EAR/HTB, EBR/HKH/HRH HTB | D | 1997 | DW10ATED4,DW10BTED4,DW10UTED4 | M | +/- | Right/Droite | 06/02 ▸ | 1253K1 | **696132** |
| 2.0 HDi 16V | EAR/HTB, EBR/HKH/HRH HTB | D | 1997 | DW10ATED4,DW10BTED4,DW10UTED4 | M | +/- | Left/gauche | 06/02 ▸ | 1253P7 | **696142** |
| 2.0 HDi 16V | EAR/HTB, EBR/HKH/HTB | D | 1997 | DW10ATED4,DW10UTED4 | M | +/- | | 06/02 ▸ 06/06 | 1250G2 | **696132** |
| 2.0 HDi 16V | EAR/HTB, EBR/HKH/HTB | D | 1997 | DW10ATED4,DW10UTED4 | M | + | | 06/02 ▸ | 1250G7 | **696142** |
| 2.0 HDi 16V | EAR/HME, EBR/HME/HWB | D | 1997 | DW10ATED4 | A | +/- | Left/gauche | 03/03 ▸ 10/06 | 1253P7 | **696142** |
| 2.0 HDi 16V | EAR/HME, EBR/HME/HWB | D | 1997 | DW10ATED4 | A | +/- | Right/Droite | 03/03 ▸ 10/06 | 1253K1 | **696132** |
| 2.0 HDi 16V | EAR/HME, EBR/HME/HWB | D | 1997 | DW10ATED4 | A | +/- | | 03/03 ▸ | 1250G2 | **696132** |
| 2.0 HDi 16V | EAR/HME, EBR/HME/HWB | D | 1997 | DW10ATED4 | A | + | | 03/03 ▸ | 1250G7 | **696142** |
| 2.0 HDi 16V ▸ 09338 | EBRHTB | D | 1997 | DW10ATED4 | M | + | | 06/02 ▸ 06/02 | 1250G6 | **696142** |
| 2.2 HDi 16V | EA4/HWB/HWG, EB4/HWB HWG | D | 2179 | DW12TED4 | M | +/- | | 06/02 ▸ 06/06 | 1250G2 | **696132** |
| 2.2 HDi 16V | EA4/HWB/HWG, EB4/HWB HWG | D | 2179 | DW12TED4 | M | +/- | Right/Droite | 06/02 ▸ 06/06 | 1253K1 | **696132** |
| 2.2 HDi 16V | EA4/HWB/HWG, EB4/HWB HWG | D | 2179 | DW12TED4 | M | +/- | Left/gauche | 06/02 ▸ 06/06 | 1253P7 | **696142** |
| 2.2 HDi 16V | EA4/HWB/HWG, EB4/HWB HWG | D | 2179 | DW12TED4 | M | + | | 06/02 ▸ 06/06 | 1250G7 | **696142** |
| 2.2 HDi 16V | EB4HWB | D | 2179 | DW12TED4 | M | + | | 06/02 ▸ 06/02 | 1250G6 | **696142** |

## 1007

| | | | | | | | | | | |
|---|---|---|---|---|---|---|---|---|---|---|
| 1.4 i,1.4 i 16V | KMK/FUC/FVB | E | 1360 | ET3J4,TU3A,TU3JP | M | - | | 04/05 ▸ 07/10 | 1253C4 | **696210** |
| 1.6 i 16V | KMNFUC | E | 1587 | TU5JP4 | M | - | | 04/05 ▸ 07/10 | 1253C4 | **696210** |
| 1.4 HDi | KM8/HXB/HZB | D | 1398 | DV4TD | M | - | | 04/05 ▸ 11/07 | 1253C4 | **696210** |
| 1.6 HDi 16V | KM9HZC | D | 1560 | DV6TED4 | M | - | | 02/07 ▸ 07/10 | 1253C4 | **696210** |

# PEUGEOT

## BOXER (2002>2006)

| | | | | | | | | | | |
|---|---|---|---|---|---|---|---|---|---|---|
| 2.0 i | ZAT/MF, ZBT/MF/MP, ZCT/MF/MM | E | 1998 | XU10J2U | M | +/- | | 01/02 ▸ 06/06 | 1250F1 | |

Fan Motor + Blades Moteur + hélice Lüftermotor + Lüfterrad Motorino + Ventola Ventilatormotor Fan motoru + Kanatlar
Moto-ventilador + Aspas Мотор вентилятора + лопасти вентилятора Ventilátor motor és lapát Motor sahary + vrtule Ventilator motor + Lame Μοτέρ ανεμιστήρων + Πτερωτές



• **New** Nouveau **Nuevo** Novo **Nuovo** Nieuw **Neu** Nowość **Yeni** Новый Νέο **Novy**

| Type Ctr. | | CC | | AC | | | OE | Valeo | |
|---|---|---|---|---|---|---|---|---|---|

# PEUGEOT (.../...)

## EXPERT (95>2003)

| | | | | | | | | | | |
|---|---|---|---|---|---|---|---|---|---|---|
| 2.0 HDi | BCRHZB, BAR/HZB BERHZB, BHRHZB, BDR/HXA/HXB/HZB, BURHZB BWRHZB, BSR/HXA/HXB/HZB, BYR/HXA/HXB/HZB BZR/HXA/HXB | D | 1997 | DW10BTED,DW10CTED | M | +/- | | 09/00 ▸ 12/03 | 1253F1 | **698542** |
| 2.0 HDi | BCRHZB, BAR/HZB BERHZB, BHRHZB, BDR/HXA/HXB/HZB, BURHZB BWRHZB, BSR/HXA/HXB/HZB, BYR/HXA/HXB/HZB BZR/HXA/HXB | D | 1997 | DW10BTED,DW10CTED | M | +/- | | 09/00 ▸ 12/03 | 125394 | **698542** |
| 2.0 HDi,2.0 HDi 16V | BDRHZA, BTRHWB BZRHWB, BAR/HWB | D | 1997 | DW10ATED,DW10ATED4 | M | | | 09/00 ▸ 12/03 | 1253F1 | **698542** |
| 2.0 HDi,2.0 HDi 16V | BDRHZA, BTRHWB BZRHWB, BAR/HWB | D | 1997 | DW10ATED,DW10ATED4 | M | | | 09/00 ▸ 12/03 | 125394 | **698542** |

## EXPERT II (2004>2006)

| | | | | | | | | | | |
|---|---|---|---|---|---|---|---|---|---|---|
| 2.0 HDi,2.0 HDi 16V | BBR/HXB/HZB, BER/HXB HZB, BTRHWB, BURHZB, BVRHWB, BSR/HXB/HZB BXRHWB, BWR/HXB/HZB, BYR/HXB/HZB, BZR/HWB HXB | D | 1997 | DW10ATED4,DW10BTED DW10BTED+L4 | M | +/- | | 01/04 ▸ 12/06 | 1253F1 | **698542** |

## EXPERT II (2007>)

| | | | | | | | | | | |
|---|---|---|---|---|---|---|---|---|---|---|
| 2.0 i 16V | XERFJC | E | 1997 | EW10A | M | +/- | | 03/07 ▸ | 1253K1 | **696132** |
| 1.6 HDi 16V | XC9HUC, XS9HUC XT9HUC, XU9HUC, XV9HUC, XW9HUC, XA9/HUC | D | 1560 | DV6UTED4 | M | +/- | | 01/07 ▸ | 1253K1 | **696132** |
| 1.6 HDi 16V | XC9HUC, XS9HUC XT9HUC, XU9HUC, XV9HUC, XW9HUC, XA9/HUC ▸ 11318 | D | 1560 | DV6UTED4 | M | +/- | Right/Droite | 01/07 ▸ | 1253P7 | **696142** |
| 1.6 HDi 16V | XC9HUC, XS9HUC XT9HUC, XU9HUC, XV9HUC, XW9HUC, XA9/HUC ▸ 11318 | D | 1560 | DV6UTED4 | M | +/- | | 01/07 ▸ 11/07 | 1250G7 | **696142** |
| 2.0 HDi 16V | XSR/HKH, XTR/HKH/HRH XVRHKH, XWRHKH, XUR/HKH/HRH | D | 1997 | DW10BTED4,DW10UTED4 | M | +/- | Right/Droite | 01/07 ▸ | 1253P7 | **696142** |
| 2.0 HDi 16V | XSR/HKH, XTR/HKH/HRH XVRHKH, XWRHKH, XUR/HKH/HRH | D | 1997 | DW10BTED4,DW10UTED4 | M | +/- | Right/Droite | 01/07 ▸ | 1250G7 | **696142** |
| 2.0 HDi 16V | XAR/HKH/HRH, XCR/HKH HRH, XSRHKH, XDR/HKH/HRH, XTR/HKH/HRH XVRHKH, XWRHKH, XUR/HKH/HRH | D | 1997 | DW10BTED4,DW10UTED4 | M | +/- | | 01/07 ▸ | 1253K1 | **696132** |
| 2.0 HDi 16V | XAR/HKH/HRH, XCR/HKH HRH, XDR/HKH/HRH | D | 1997 | DW10BTED4,DW10UTED4 | M | + | | 03/07 ▸ | 1250G7 | **696142** |
| 2.0 HDi 16V | XAR/HKH/HRH, XCR/HKH HRH, XDR/HKH/HRH | D | 1997 | DW10BTED4,DW10UTED4 | M | + | | 03/07 ▸ | 1253P7 | **696142** |

## PARTNER (96>2002)

| | | | | | | | | | | |
|---|---|---|---|---|---|---|---|---|---|---|
| 1.1 i | 5AHFXF, 5BHFXF | E | 1124 | TU1JP | M | - | | 01/01 ▸ 11/02 | 125363 | **698444** |
| 1.4,1.4 i,1.4 i GPL | 5BK/5A2, 5FK/5A2/FWF | E | 1360 | TU3.2,TU3JP | M | - | | 06/96 ▸ 11/02 | 125363 | **698444** |
| 1.4,1.4 i,1.4 i GPL | 5BK/5A2/5AG/FXD/FXE 5EK5AG, 5CK/FXD/FXE, 5FK/5A2/5AG/FXD/FXE ▸ 7883 | E | 1360 | TU3.2,TU3JP | M | + | | 06/96 ▸ 06/98 | 125364 | |
| 1.4 i,1.4 i GPL | 5BK/FXD/FXE, 5CK/FXD FXE, 5FK/FXD/FXE 7884 ▸ 8091 | E | 1360 | TU3JP | M | +/- | | 06/98 ▸ 01/99 | 125363 | **698444** |
| 1.4 | 5EK5AG, 5FK5AG, 5BK/5AG 7884 ▸ 8091 | E | 1360 | TU3.2 | M | + | | 06/98 ▸ 01/99 | 125363 | **698444** |
| 1.8 i | 5FLFXE | E | 1761 | XU7JB | M | - | | 05/97 ▸ 11/02 | 125363 | **698444** |
| 1.8 i | 5FLFXE ▸ 07883 | E | 1761 | XU7JB | M | + | | 05/97 ▸ 06/98 | 125364 | |
| 1.9 D | 5BW/JYF/JZE/JZT, 5CW/JYF/JZE, 5FW/JYF/JZE | D | 1868 | DW8,DW8B | M | + | | 10/98 ▸ 11/02 | 1250F1 | |
| 1.9 D | 5BW/JYF/JZE/JZT, 5CW/JYF/JZE, 5FW/JYF/JZE | D | 1868 | DW8,DW8B | M | + | | 10/98 ▸ 11/02 | 1250F0 | **698375** |
| 1.9 D | 5BW/JYF/JZE/JZT, 5CW/JYF/JZE, 5FW/JYF/JZE | D | 1868 | DW8,DW8B | M | - | | 10/98 ▸ 11/02 | 1250E9 | |
| 2.0 HDi | 5CRHYF, 5BR/HYF, 5FR HYF/HYU | D | 1997 | DW10TD | M | + | | 05/00 ▸ 11/02 | 1250F0 | **698375** |
| 2.0 HDi | 5CRHYF, 5BR/HYF, 5FR HYF/HYU | D | 1997 | DW10TD | M | - | | 05/00 ▸ 11/02 | 1250E9 | |

## PARTNER (2002>)

| | | | | | | | | | | |
|---|---|---|---|---|---|---|---|---|---|---|
| 1.4 i GNV,1.4 i GPL | GCKFWB, GJKFWB, GBK FWB/FWC | G | 1360 | TU3JP | M | + | | 04/03 ▸ 05/08 | 1253C8 | **696137** |
| 1.4 i GNV,1.4 i GPL | GCKFWB, GJKFWB, GBK FWB/FWC | G | 1360 | TU3JP | M | + | | 04/03 ▸ 05/08 | 1253A6 | **696177** |
| 1.1 i | GBHFXB | E | 1124 | TU1JP | M | + | | 11/02 ▸ 05/08 | 1253A6 | **696177** |
| 1.1 i | GBHFXB | E | 1124 | TU1JP | M | + | | 11/02 ▸ 05/08 | 1253C8 | **696137** |

# PEUGEOT (.../...)

## PARTNER (2002>) (.../...)

| | | | CC | | | AC | | | OE | Valeo | |
|---|---|---|---|---|---|---|---|---|---|---|---|
| 1.4 i | GBK/FVC/FWB, GJK/FVC/FWB | E | 1360 | TU3A,TU3JP | M | + | | 11/02 ▸ 05/08 | 1253C8 | 696137 | |
| 1.4 i | GBK/FVC, GJK/FVC/FWB | E | 1360 | TU3A,TU3JP | M | + | | 11/02 ▸ 05/08 | 1253A6 | 696177 | |
| 1.4 i | GBKFWB | E | 1360 | TU3JP | M | - | | 11/02 ▸ 05/08 | 1253A6 | 696177 | |
| 1.6 i 16V | GBNFUB, GCNFUB | E | 1587 | TU5JP4 | M | + | | 11/02 ▸ 05/08 | 1253A6 | 696177 | |
| 1.6 i 16V | GCNFUB, GJNFUB, GBN FUB | E | 1587 | TU5JP4 | M | + | | 11/02 ▸ 05/08 | 1253C8 | 696137 | |
| 1.6 i 16V | GJNFUB | E | 1587 | TU5JP4 | M | - | | 11/02 ▸ 05/08 | 1253A6 | 696177 | |
| 1.6 HDi 16V | GB9/HWC/HXC, GC9/HWC HXC, GJ9/HWC/HXC | D | 1560 | DV6ATED4,DV6BTED4 | M | +/- | | 01/06 ▸ 05/08 | 1253C8 | 696137 | |
| 1.9 D | GCWJYB, GEWJYB, GJWJYB, GBW/JYB | D | 1868 | DW8B | M | + | | 11/02 ▸ 05/08 | 1253C8 | 696137 | |
| 1.9 D | GCWJYB, GJWJYB, GBW/JYB | D | 1868 | DW8B | M | + | | 11/02 ▸ 05/08 | 1253A6 | 696177 | |
| 1.9 D | GBWJYB, GEWJYB | D | 1868 | DW8B | M | - | | 11/02 ▸ 05/08 | 1253A6 | 696177 | |
| 2.0 HDi | GCRHYB, GERHYB, GBR HYB, GJR/HY/HYK | D | 1997 | DW10TD | M | + | | 11/02 ▸ 05/08 | 1253C8 | 696137 | |
| 2.0 HDi | GCR/HYB, GJR/HY/HYK | D | 1997 | DW10TD | M | + | | 11/02 ▸ 05/08 | 1253A6 | 696177 | |
| 2.0 HDi | GBRHYB, GERHYB | D | 1997 | DW10TD | M | - | | 11/02 ▸ 05/08 | 1253A6 | 696177 | |

## PARTNER (B9) (2008>)

| | | | | | | | | | | | |
|---|---|---|---|---|---|---|---|---|---|---|---|
| 1.6 i 16V | 7AN/FRC, 7JN/FRC/FUC | E | 1587 | TU5JP4,TU5JP4B | M | +/- | | 05/08 ▸ | 1253K4 | 696091 | |
| 1.6 HDi 16V | 7A9/HTC/HXC, 7B9/HTC HXC, 7J9/HTC/HXC/HZC | D | 1560 | DV6ATED4,DV6AUTED4,DV6BTED4 DV6BUTED4,DV6TED4 | M | +/- | | 05/08 ▸ | 1253K4 | 696091 | |

## RANCH (2002>)

| | | | | | | | | | | | |
|---|---|---|---|---|---|---|---|---|---|---|---|
| 1.4 i | GBKFWB | E | 1360 | TU3JP | M | + | | 11/02 ▸ 05/08 | 1253C8 | 696137 | |
| 1.4 i | GBKFWB | E | 1360 | TU3JP | M | - | | 11/02 ▸ 05/08 | 1253A6 | 696177 | |
| 1.9 D | GBWJYB, GCWJYB | D | 1868 | DW8B | M | + | | 11/02 ▸ 05/08 | 1253C8 | 696137 | |
| 1.9 D | GBWJYB, GCWJYB | D | 1868 | DW8B | M | - | | 11/02 ▸ 05/08 | 1253A6 | 696177 | |
| 2.0 HDi | GBRHYB, GCRHYB | D | 1997 | DW10TD | M | + | | 11/02 ▸ 05/08 | 1253C8 | 696137 | |
| 2.0 HDi | GBRHYB, GCRHYB | D | 1997 | DW10TD | M | - | | 11/02 ▸ 05/08 | 1253A6 | 696177 | |

# RENAULT

## R19

| | | | | | | | | | | | |
|---|---|---|---|---|---|---|---|---|---|---|---|
| 1.2 e | C53W | E | 1171 | E7F | M | + | | 05/92 ▸ 10/95 | 7700784652 | 698313 | |
| 1.4,1.4 GPL,1.4 e,1.4 i | B53/5/7/A/G, C53/5/7 A, S537, L53/5/7/A/G | E | 1390 | E6J,E7J | M | + | | 07/88 ▸ 11/95 | 7700784652 | 698313 | |
| 1.4,1.4 e,1.4 i | B53/7/A, C53/7/A L53/7/A | E | 1390 | E6J,E7J | A | + | | 07/88 ▸ 11/95 | 7700784652 | 698313 | |
| 1.4 | L53H | E | 1397 | C2J | M | + | | 04/89 ▸ 04/92 | 7700784652 | 698313 | |
| 1.7,1.7 i | B53/3/6/B/C/E/F/M D53C, C53/3/B/C/E/F/M, L53/3/6/B/C/F | E | 1721 | F2N,F3N | M | + | | 07/88 ▸ 11/95 | 7700784652 | 698313 | |
| 1.7,1.7 i | B53/3/B/C, D53C, C53 3/B/C, L53/3/B/C | E | 1721 | F2N,F3N | A | + | | 07/88 ▸ 11/95 | 7700784652 | 698313 | |
| 1.8 16V,1.8 i 16V | C53D, D53D, L53D B53/D | E | 1763 | F7P | M | + | | 04/89 ▸ 10/95 | 7700784652 | 698313 | |
| 1.8 i | 353/A/C/D, 453/A/C/D/H, 553/A/C/D/H, 853/A/C D53Y, B53/8/Y, L53/8/Y | E | 1794 | F3P | M | + | | 05/92 ▸ 11/95 | 7700784652 | 698313 | |
| 1.8 i | 353/F, 453/F/H, 853F, B53Y, 553/F/H, C53/V/Y D53/V/Y, L53/V/Y | E | 1794 | F3P | A | + | | 05/92 ▸ 11/95 | 7700784652 | 698313 | |
| 1.9 D,1.9 TD | B53/4/I/K/T, C53/4/I K/T/Z, L53/4/I/K/T/Z, S53/4/I/K | D | 1870 | F8Q | M | + | | 07/88 ▸ 10/95 | 7700784652 | 698313 | |

## CLIO (90>98)

| | | | | | | | | | | | |
|---|---|---|---|---|---|---|---|---|---|---|---|
| - | 557W | L | - | 2BD | M | + | | 11/95 ▸ 02/96 | 7700784652 | 698313 | |
| 1.1 | S571 | E | 1108 | C1E | M | + | | 09/90 ▸ 02/96 | 7700784652 | 698313 | |
| 1.2 i | 657K | E | 1149 | D7F | M | +/- | | 03/96 ▸ 02/98 | 7700784652 | 698313 | |
| 1.2 i | 357/K/Y, 557/K/Y | E | 1149 | D7F | M | + | | 03/96 ▸ 02/98 | 7700784652 | 698313 | |
| 1.2 i | S57/A/R | E | 1171 | E7F | M | +/- | | 03/96 ▸ 02/98 | 7700784652 | 698313 | |
| 1.2,1.2 i | 357/F/G/J/L, 557/F/G J/L/R, B57/A/N/S, C57/A/R/S, S57/2/A/R | E | 1171 | E5F,E7F | M | + | | 09/90 ▸ 02/98 | 7700784652 | 698313 | |
| 1.2 i | C577, S577, B57/7 | E | 1239 | C3G | M | + | | 07/94 ▸ 02/96 | 7700784652 | 698313 | |
| 1.4 i | B57B | E | 1390 | E7J | M | +/- | | 03/96 ▸ 02/98 | 7700784652 | 698313 | |
| 1.4,1.4 i | 557/B, B57/3/B/J/P/T Y, C57/3/B/J/T/Y | E | 1390 | E6J,E7J | M | + | | 06/90 ▸ 02/98 | 7700784652 | 698313 | |
| 1.4 i | B57B | E | 1390 | E7J | A | +/- | | 03/96 ▸ 02/98 | 7700784652 | 698313 | |
| 1.4,1.4 i | B57/3/B/J/T, C57/3/B J/T | E | 1390 | E6J,E7J | A | + | | 06/90 ▸ 02/98 | 7700784652 | 698313 | |
| 1.7 | B574, C574 | E | 1721 | F2N | M | + | | 06/90 ▸ 02/96 | 7700784652 | 698313 | |
| 1.8 i | 557U, 357/E/U/V, B57/C/U, C57/9/C/H | E | 1794 | F3P | M | + | | 09/90 ▸ 02/98 | 7700784652 | 698313 | |

Fan Motor + Blades Moteur + hélice Lüftermotor + Lüfterrad Motorino + Ventola Ventilatormotor Fan motoru + Kanatlar
Moto-ventilador + Aspas Мотор вентилятора + лопасти вентилятора Ventilátor motor és lapát Motor sahary + vrtule Ventilator motor + Lame Μοτέρ ανεμιστήρων + Πτερωτές



• **New** Nouveau **Nuevo** Novo **Nuovo** Nieuw **Neu** Nowość **Yeni** Новый Νέο **Novy**

# RENAULT (.../...)

## CLIO (90>98) (.../...)

| | | | | | | | | | | |
|---|---|---|---|---|---|---|---|---|---|---|
| 1.8 i | 357/A/D/U, B578, C578, 557/D/U | E | 1794 | F3P | A | + | | 01/94 ▸ 02/98 | 7700784652 | 698313 |
| 1.9 D | 557/N, 657/H/M/N, B57/6/I/L, C57/6/I/L, S57 I/L | D | 1870 | F8Q | M | +/- | | 06/90 ▸ 02/98 | 7700784652 | 698313 |
| 1.9 D | 357/N, C57/I/L, S57/6/I/L | D | 1870 | F8Q | M | + | | 09/90 ▸ 02/98 | 7700784652 | 698313 |

## CLIO II (98>2001)

| | | | | | | | | | | |
|---|---|---|---|---|---|---|---|---|---|---|
| 1.2 i,1.2 i GPL | BB0/A/B/F, SB0A, CB0 A/B/F | E | 1149 | D7F | M | + | | 03/98 ▸ 03/01 | 7701045816 | 696013 |
| 1.2 i,1.2 i GPL | BB0/A/B/F, SB0A, CB0 A/B/F | E | 1149 | D7F | M | + | | 03/98 ▸ 03/01 | 7701070217 | 696013 |
| 1.4 i,1.4 i 16V | BB0/C/S, CB0/C/L/S | E | 1390 | E7J,K4J | M | + | | 03/98 ▸ 03/01 | 7701070217 | 696013 |
| 1.4 i,1.4 i 16V | BB0/C/S, CB0/C/L/S | E | 1390 | E7J,K4J | M | + | | 03/98 ▸ 03/01 | 7701045816 | 696013 |
| 1.4 i,1.4 i 16V | BB0L, LB03 | E | 1390 | K4J,K7J | M | - | | 09/99 ▸ 03/01 | 7701070217 | 696013 |
| 1.4 i,1.4 i 16V | BB0L, LB03 | E | 1390 | K4J,K7J | M | - | | 09/99 ▸ 03/01 | 7701045816 | 696013 |
| 1.4 i,1.4 i 16V | BB0/S, CB0/L/S | E | 1390 | E7J,K4J | A | + | | 10/98 ▸ 03/01 | 7701045816 | 696013 |
| 1.4 i,1.4 i 16V | BB0/S, CB0/L/S | E | 1390 | E7J,K4J | A | + | | 10/98 ▸ 03/01 | 7701070217 | 696013 |
| 1.4 i 16V | BB0L | E | 1390 | K4J | A | - | | 04/00 ▸ 03/01 | 7701045816 | 696013 |
| 1.4 i 16V | BB0L | E | 1390 | K4J | A | - | | 04/00 ▸ 03/01 | 7701070217 | 696013 |
| 1.6 i,1.6 i 16V | BB0/0/D, CB0/D/H/T | E | 1598 | K4M,K7M | M | + | | 03/98 ▸ 03/01 | 7701070217 | 696013 |
| 1.6 i,1.6 i 16V | BB0/0/D, CB0/D/H/T | E | 1598 | K4M,K7M | M | + | | 03/98 ▸ 03/01 | 7701045816 | 696013 |
| 1.6 i | LB00 | E | 1598 | K7M | M | - | | 03/00 ▸ 03/01 | 7701045816 | 696013 |
| 1.6 i | LB00 | E | 1598 | K7M | M | - | | 03/00 ▸ 03/01 | 7701070217 | 696013 |
| 1.6 i | BB0D, CB0D | E | 1598 | K7M | A | + | | 03/98 ▸ 03/01 | 7701070217 | 696013 |
| 1.6 i | BB0D, CB0D | E | 1598 | K7M | A | + | | 03/98 ▸ 03/01 | 7701045816 | 696013 |
| 2.0 i 16V | CB0M | E | 1998 | F4R | M | +/- | | 01/00 ▸ 03/01 | 7701070217 | 696013 |
| 2.0 i 16V | CB0M | E | 1998 | F4R | M | +/- | | 01/00 ▸ 03/01 | 7701045816 | 696013 |
| 1.9 D | BB0/2/E/J, LB02, CB0/E/J, SB0/E/J/R | D | 1870 | F8Q | M | +/- | | 03/98 ▸ 03/01 | 7701045816 | 696013 |
| 1.9 D | BB0/2/E/J, LB02, CB0/E/J, SB0/E/J/R | D | 1870 | F8Q | M | +/- | | 03/98 ▸ 03/01 | 7701070217 | 696013 |
| 1.9 dTi | BB0U, CB0U | D | 1870 | F9Q | M | + | | 11/99 ▸ 03/01 | 7701070217 | 696013 |
| 1.9 dTi | BB0U, CB0U | D | 1870 | F9Q | M | + | | 11/99 ▸ 03/01 | 7701045816 | 696013 |

## CLIO II (2001>)

| | | | | | | | | | | |
|---|---|---|---|---|---|---|---|---|---|---|
| 1.2 i GPL | CB0A, SB0A, BB0/A | G | 1149 | D7F | M | + | C | 04/01 ▸ 12/04 | 7701070217 | 696013 |
| 1.2 i GPL | CB0A, SB0A, BB0/A | G | 1149 | D7F | M | + | C | 04/01 ▸ | 7701045816 | 696013 |
| 1.0 i | BB0Y | E | 999 | D7D | M | + | C | 04/01 ▸ | 7701045816 | 696013 |
| 1.0 i,1.0 i 16V | BB0/6/Y, BB3B, BB2/R Y, CB0/6/Y, CB3B, LB06, LB3B, CB2/R/Y | E | 999 | D4D,D7D | M | + | | 04/01 ▸ 09/08 | 7701070217 | 696013 |
| 1.2 i,1.2 i 16V,1.2 i GPL | BB0/5/A/F/W, BB1/0/1 9/K, BBDU, BB2/7/8/D/H/T/U/V, CB0/5/A/F/W CB1/0/1/9/K, CB2/7/D/H/T/U/V, LB1/1/9/Y LB2/7/R/U/V, SB0/A/F, SB1/0/K, SB2/D/H | E | 1149 | D4F,D7F | M | + | | 04/01 ▸ | 7701070217 | 696013 |
| 1.2 i,1.2 i 16V,1.2 i GPL | BB0/5/A/F/W, BB1/0/1 K, CB0/5/A/F/W, CB1/0/1/K, SB10, SB0/A/F | E | 1149 | D4F,D7F | M | + | C | 04/01 ▸ | 7701045816 | 696013 |
| 1.2 i 16V | LB2V | E | 1149 | D4F | A | + | | 04/01 ▸ | 7701070217 | 696013 |
| 1.4 i,1.4 i 16V | BB0/B/C/L/P/S, BB1/3 7/L, CB0/B/C/L/P/S, CB1/3/7/L, LB0/3/B/K/L/P LB1/3/7, LB2/A/B, LB3/D/K | E | 1390 | E7J,K4J,K7J | M | + | C | 04/01 ▸ | 7701070217 | 696013 |
| 1.4 i,1.4 i 16V | BB0/B/C/L/P/S, BB1/3 7/L, CB0/B/C/L/P/S, CB1/3/7/L | E | 1390 | E7J,K4J,K7J | M | + | C | 04/01 ▸ | 7701045816 | 696013 |
| 1.4 i,1.4 i 16V | BB0/L/P/S, BB1/3/L CB0/L/P/S, CB1/3/L | E | 1390 | E7J,K4J | A | + | C | 04/01 ▸ | 7701045816 | 696013 |
| 1.4 i,1.4 i 16V | BB0/L/P/S, BB1/3/L CB0/L/P/S, CB1/3/L, LB0/K/L, LB3D, LB2/A/B | E | 1390 | E7J,K4J | A | + | | 04/01 ▸ | 7701070217 | 696013 |
| 1.6 i,1.6 i 16V | BB0/0/1/D/H/T, BB1/4 D/J, CB0/D/H/T, CB1/4/D | E | 1598 | K4M,K7M | M | + | C | 04/01 ▸ | 7701045816 | 696013 |
| 1.6 i,1.6 i 16V | BB0/0/1/D/H/T, BB1/4 D/J/R, BB2/6/K, BB3/E/G/H, CB0/1/D/H/T/Y CB26, CB1/4/D, CB3/E/G/H, LB0/0/1, LB1/8/B J/R/V, LB2/6/K, LB3/E/G/H | E | 1598 | K4M,K7M | M | + | | 04/01 ▸ | 7701070217 | 696013 |
| 1.6 i,1.6 i 16V | BB0/D, CB0D, CB14 BB1/4/R | E | 1598 | K4M,K7M | A | + | C | 04/01 ▸ | 7701045816 | 696013 |
| 1.6 i,1.6 i 16V | BB0/D, BB2K, CB0D BB1/4/D/R, LB1R, LB2K, CB1/4/D | E | 1598 | K4M,K7M | A | + | | 04/01 ▸ 09/08 | 7701070217 | 696013 |
| 2.0 i 16V | CB0/M, CB1/5/C/G/N/S T, CB2/0/1/2/P | E | 1998 | F4R | M | + | | 04/01 ▸ 12/04 | 7701070217 | 696013 |
| 2.0 i 16V | CB0/M, CB1/5/C/N/S | E | 1998 | F4R | M | + | C | 04/01 ▸ | 7701045816 | 696013 |
| 1.5 dCi | BB0/7/8, CB0/7/8 SB0/7/8/9 | D | 1461 | K9K | M | + | C | 04/01 ▸ | 7701045816 | 696013 |

| Type Ctr. | | CC | | AC | | | OE | Valeo | |
|---|---|---|---|---|---|---|---|---|---|
| **RENAULT** (.../...) | | | | | | | | | |
| **CLIO II (2001>) (.../...)** | | | | | | | | | |
| 1.5 dCi BB1W, BB0/7/8, BB2/4 G/J, BB8N, BBBN, BB3/M/N, CB1W, CB0/7/8, CB2 G/J, CB8N, CBBN, LB07, LB1W, CB3/M/N, LB2/3 4/9/E, LB3/M/N, SB2J, SB0/7/8/9, SB3/A/M | D | 1461 | K9K | M | + | | 04/01 ▸ | 7701070217 | **696013** |
| 1.9 D,1.9 dTi BB2C, BB0/2/E/J/U/V CB2C, CB0/E/J/U/V, SB0/E/J/R/U | D | 1870 | F8Q,F9Q | M | + | C | 04/01 ▸ | 7701045816 | **696013** |
| 1.9 D,1.9 dTi BB2C, BB0/2/E/J/U/V CB2C, LB02, CB0/E/J/U/V, SB0/E/J/R/U | D | 1870 | F8Q,F9Q | M | + | C | 04/01 ▸ | 7701070217 | **696013** |
| **ESPACE III (96>2000)** | | | | | | | | | |
| 2.2 dT JE0/E/H/P | D | 2188 | G8T | M | + | | 10/96 ▸ 06/00 | 6025306733 | **696285** |
| 2.2 dT JE0/E/H/P 970131 ▸ | D | 2188 | G8T | M | - | | 01/97 ▸ 06/00 | 7701469149 | **696285** |
| 2.2 dT JE0/E/H | D | 2188 | G8T | M | - | | 10/96 ▸ 01/97 | 7701040699 | |
| **ESPACE IV (2002>2006)** | | | | | | | | | |
| 2.2 dCi 16V JK0H | D | 2188 | G9T | A | | | 09/02 ▸ | 7701050192 | **696288** |
| **ESPACE IV PHASE 2 (2006>)** | | | | | | | | | |
| 2.0 i 16V,2.0 i Turbo 16V JK0/9/A | E | 1998 | F4R | M | + | | 03/06 ▸ | 7701050192 | **696288** |
| 2.0 i Turbo 16V JK0A | E | 1998 | F4R | A | + | | 05/07 ▸ | 7701050192 | **696288** |
| **LAGUNA (94>98)** | | | | | | | | | |
| 1.8 i B56/0/B/S/T/Z | E | 1794 | F3P | M | + | | 01/94 ▸ 10/97 | 7701469149 | **696285** |
| 1.8 i B560 980220 ▸ | E | 1794 | F3P | M | + | | 02/98 ▸ 04/98 | 7701045355 | **696285** |
| 1.8 i B56/A/B/S | E | 1794 | F3P | M | | | 01/94 ▸ 06/96 | 7701469149 | **696285** |
| 2.0 i 16V B56D | E | 1948 | N7Q | M | + | | 05/95 ▸ 12/96 | 7701469149 | **696285** |
| 2.0 i 16V B56/D/M ▸ 971017 | E | 1948 | N7Q | M | - | | 05/95 ▸ 10/97 | 7701469149 | **696285** |
| 2.0 i B56N | E | 1998 | F3R | M | +/- | | 01/94 ▸ 01/96 | 7701469149 | **696285** |
| 2.0 i B56/C/L | E | 1998 | F3R | M | + | | 06/94 ▸ 04/98 | 7701469149 | **696285** |
| 2.0 i B56/C/H/L/N | E | 1998 | F3R | M | - | | 01/94 ▸ 04/98 | 7701469149 | **696285** |
| 2.0 i B56N 980220 ▸ | E | 1998 | F3R | M | | | 02/98 ▸ 04/98 | 7701045355 | **696285** |
| 2.0 i B56/C/H/L | E | 1998 | F3R | A | + | | 01/94 ▸ 04/98 | 7701469149 | **696285** |
| 2.0 i B56N 980220 ▸ | E | 1998 | F3R | A | + | | 02/98 ▸ 04/98 | 7701045355 | **696285** |
| 2.0 i B56/C/L/N | E | 1998 | F3R | A | - | | 01/94 ▸ 04/98 | 7701469149 | **696285** |
| 2.0 i B56N 980220 ▸ | E | 1998 | F3R | A | | | 02/98 ▸ 01/96 | 7701045355 | **696285** |
| 2.0 i B56N ▸ 971017 | E | 1998 | F3R | A | +/- | | 01/96 ▸ 10/97 | 7701469149 | **696285** |
| 3.0 i V6 B56V ▸ 971017 | E | 2946 | L7X | M | | | 05/97 ▸ 10/97 | 7701469149 | **696285** |
| 3.0 i V6 B56V ▸ 971017 | E | 2946 | L7X | A | | | 07/97 ▸ 10/97 | 7701469149 | **696285** |
| 3.0 i V6 B56E | E | 2963 | Z7X | M | +/- | | 01/94 ▸ 12/96 | 7701469149 | **696285** |
| 3.0 i V6 B56R | E | 2963 | Z7X | A | +/- | | 01/94 ▸ 12/96 | 7701469149 | **696285** |
| 3.0 i V6 B56/5/R | E | 2963 | Z7X | A | - | | 01/94 ▸ 04/98 | 7701469149 | **696285** |
| 2.2 D,2.2 Dt B56/2/6/9/F | D | 2188 | G8T | M | - | | 03/94 ▸ 04/98 | 7701469149 | **696285** |
| 2.2 Dt B569 ▸ 970131 | D | 2188 | G8T | M | - | | 03/96 ▸ 01/97 | 7701040699 | |
| 2.2 D B56/F/P | D | 2188 | G8T | M | +/- | | 11/95 ▸ 04/98 | 7701469149 | **696285** |
| **LAGUNA (98>2000)** | | | | | | | | | |
| 1.6 i 16V | E | 1598 | K4M | M | + | | 05/98 ▸ 12/00 | 7701045355 | **696285** |
| 1.8 i 16V B56/3/4/Y | E | 1783 | F4P | M | + | | 09/98 ▸ 12/00 | 7701045355 | **696285** |
| 2.0 i B56L | E | 1998 | F3R | M | + | | 05/98 ▸ 12/00 | 7701045355 | **696285** |
| 2.0 i B56/L/U | E | 1998 | F3R | A | + | | 05/98 ▸ 12/00 | 7701045355 | **696285** |
| 1.9 dCi,1.9 dTi B56/J/W | D | 1870 | F9Q | M | + | | 09/99 ▸ 12/00 | 7701045355 | **696285** |
| 1.9 dTi B56J | D | 1870 | F9Q | A | + | | 07/99 ▸ 12/00 | 7701045355 | **696285** |
| 2.2 dT B569 | D | 2188 | G8T | M | - | | 05/98 ▸ 12/00 | 7701469149 | **696285** |
| **LAGUNA NEVADA (95>98)** | | | | | | | | | |
| 3.0 i V6 K56/5/R | E | 2963 | Z7X | A | - | | 02/96 ▸ 04/98 | 7701469149 | **696285** |
| 2.2 dT K569 | D | 2188 | G8T | M | | | 03/96 ▸ 01/97 | 7701040699 | |
| **LAGUNA NEVADA (98>2000)** | | | | | | | | | |
| 1.8 i GPL K560 | G | 1794 | F3P | M | - | | 05/98 ▸ 12/00 | 7701469149 | **696285** |

Fan Motor + Blades Moteur + hélice Lüftermotor + Lüfterrad Motorino + Ventola Ventilatormotor Fan motoru + Kanatlar
Moto-ventilador + Aspas Мотор вентилятора + лопасти вентилятора Ventilátor motor és lapát Motor sahary + vrtule Ventilator motor + Lame Μοτέρ ανεμιστήρων + Πτερωτές



• **New** Nouveau **Nuevo** Novo **Nuovo** Nieuw **Neu** Nowość **Yeni** Новый Νέο **Nový**

| Type Ctr. | | CC | | | AC | | | OE | Valeo | |
|---|---|---|---|---|---|---|---|---|---|---|

# RENAULT (.../...)

## LAGUNA NEVADA (98>2000) (.../...)

| | | | | | | | | | | |
|---|---|---|---|---|---|---|---|---|---|---|
| 1.6 i 16V | K56/1/8 | E | 1598 | K4M | M | + | | 05/98 ▸ 12/00 | 7701045355 | **696285** |
| 1.8 i 16V | K56/3/4/Y | E | 1783 | F4P | M | + | | 05/98 ▸ 12/00 | 7701045355 | **696285** |
| 1.8 i | K56O | E | 1794 | F3P | M | - | | 05/99 ▸ 12/00 | 7701469149 | **696285** |
| 2.0 i 16V | K56M | E | 1948 | N7Q | M | - | | 05/98 ▸ 12/00 | 7701469149 | **696285** |
| 2.0 i | K56L | E | 1998 | F3R | M | + | | 05/98 ▸ 12/00 | 7701045355 | **696285** |
| 2.0 i | K56L | E | 1998 | F3R | A | + | | 05/98 ▸ 12/00 | 7701045355 | **696285** |
| 3.0 i V6 | K56V | E | 2946 | L7X | M | - | | 05/98 ▸ 12/00 | 7701469149 | **696285** |
| 3.0 i V6 | K56V | E | 2946 | L7X | A | - | | 05/98 ▸ 12/00 | 7701469149 | **696285** |
| 1.9 dCi | K56W | D | 1870 | F9Q | M | + | | 09/99 ▸ 12/00 | 7701045355 | **696285** |

## LAGUNA II (2005>)

| | | | | | | | | | | |
|---|---|---|---|---|---|---|---|---|---|---|
| 1.9 dCi | BG1/A/V, KG1/A/V | D | 1870 | F9Q | M | +/- | C | 03/05 ▸ | 7701050192 | **696288** |
| 2.0 dCi | BG1T, KG1T | D | 1995 | M9R | M | +/- | C | 07/05 ▸ | 7701050192 | **696288** |
| 2.2 dCi 16V | BG09, KG09 | D | 2188 | G9T | M | +/- | C | 03/05 ▸ | 7701050192 | **696288** |
| 2.2 dCi | BG0F, KG0F | D | 2188 | G9T | A | +/- | C | 03/05 ▸ | 7701050192 | **696288** |

## LUTECIA (JAP)

| | | | | | | | | | | |
|---|---|---|---|---|---|---|---|---|---|---|
| 1.4 i | B57B | E | 1390 | E7J | M | +/- | | 03/96 ▸ 02/98 | 7700784652 | **698313** |
| 1.8 i | 357A, 557A | E | 1794 | F3P | A | + | | 10/94 ▸ 02/98 | 7700784652 | **698313** |

## MEGANE (95>99)

| | | | | | | | | | | |
|---|---|---|---|---|---|---|---|---|---|---|
| 1.4 i 16V | DA0W | E | 1390 | K4J | M | + | C | 09/98 ▸ 02/99 | 7701070217 | **696013** |
| 1.4 i 16V | DA0W | E | 1390 | K4J | M | + | C | 09/98 ▸ 02/99 | 7701045816 | **696013** |
| 1.6 i | EA0F, BA0/F/S | E | 1598 | K7M | M | + | C | 11/95 ▸ 05/97 | 7700784652 | **698313** |
| 1.6 i<br>970507 ▸ | DA0F, EA0F, BA0/F/L/S | E | 1598 | K7M | M | + | C | 02/97 ▸ 02/99 | 7701070217 | **696013** |
| 1.6 i | DA0F, EA0F, BA0/F/L/S | E | 1598 | K7M | M | + | C | 05/97 ▸ 02/99 | 7701045816 | **696013** |
| 1.6 i<br>970507 ▸ | BA0F, DA0F | E | 1598 | K7M | A | + | C | 11/95 ▸ 02/99 | 7701070217 | **696013** |
| 1.6 i<br>970507 ▸ | BA0F, DA0F | E | 1598 | K7M | A | + | C | 05/97 ▸ 02/99 | 7701045816 | **696013** |
| 1.6 i<br>▸ 970507 | DA0F | E | 1598 | K7M | A | + | C | 11/95 ▸ 05/97 | 7700784652 | **698313** |
| 2.0 i,2.0 i 16V<br>970507 ▸ | BA0/7/G/H, DA0/G/H<br>EA0/G/H | E | 1998 | F3R,F7R | M | + | C | 11/95 ▸ 02/99 | 7701070217 | **696013** |
| 2.0 i,2.0 i 16V<br>970507 ▸ | BA0/7/G/H, DA0/G/H<br>EA0/G/H | E | 1998 | F3R,F7R | M | + | C | 05/97 ▸ 02/99 | 7701045816 | **696013** |
| 2.0 i<br>970507 ▸ | DA0G, EA0G, BA0/7/G | E | 1998 | F3R | A | + | C | 11/95 ▸ 02/99 | 7701070217 | **696013** |
| 2.0 i | DA0G, EA0G, BA0/7/G | E | 1998 | F3R | A | + | C | 05/97 ▸ 02/99 | 7701045816 | **696013** |
| 2.0 i,2.0 i 16V<br>▸ 970507 | BA0/7/G/H, DA0/G/H<br>EA0/G/H | E | 1998 | F3R,F7R | M | + | C | 11/95 ▸ 05/97 | 7700784652 | **698313** |
| 2.0 i<br>▸ 970507 | DA0G, BA0/7/G | E | 1998 | F3R | A | + | C | 11/95 ▸ 05/97 | 7700784652 | **698313** |
| 1.9 D,1.9 dT,1.9 dTi | DA0N, BA0/8/9/A/K/N<br>U/Y, SA0/9/A/U/Y | D | 1870 | F8Q,F9Q | M | + | C | 11/95 ▸ 05/97 | 7700784652 | **698313** |
| 1.9 D,1.9 dT,1.9 dTi<br>970507 ▸ | DA0N, BA0/8/9/A/K/N<br>U/Y, SA0/9/A/U/Y | D | 1870 | F8Q,F9Q | M | + | C | 05/97 ▸ 02/99 | 7701045816 | **696013** |
| 1.9 D,1.9 dT,1.9 dTi<br>970507 ▸ | DA0N, BA0/8/9/A/K/N<br>U/Y, SA0/9/A/U/Y | D | 1870 | F8Q,F9Q | M | + | C | 05/97 ▸ 02/99 | 7701070217 | **696013** |
| 1.9 dTi<br>970507 ▸ | DA0N | D | 1870 | F9Q | A | + | C | 11/95 ▸ 06/97 | 7701070217 | **696013** |
| 1.9 dTi<br>970507 ▸ | DA0N | D | 1870 | F9Q | A | + | C | 05/97 ▸ 06/97 | 7701045816 | **696013** |
| 1.9 dTi | DA0N | D | 1870 | F9Q | A | + | C | 11/95 ▸ 05/97 | 7700784652 | **698313** |

## MEGANE (98>2003)

| | | | | | | | | | | |
|---|---|---|---|---|---|---|---|---|---|---|
| 1.4 i,1.4 i 16V | BA0/D/V/W, BA1/0/H<br>DA0/D/W, DA1/0/H, EA1H, EA0/D/W, KA0/D/V/W<br>KA1/0/H | E | 1390 | E7J,K4J | M | + | | 10/98 ▸ 02/03 | 7701070217 | **696013** |
| 1.4 i,1.4 i 16V | BA0/D/V/W, BA1/0/H<br>DA0/D/W, DA1/0/H, EA1H, EA0/D/W, KA0/D/V/W<br>KA1/0/H | E | 1390 | E7J,K4J | M | + | | 02/99 ▸ | 7701045816 | **696013** |

# RENAULT (.../...)

## MEGANE (98>2003) (.../...)

| Type Ctr. | | CC | | AC | | | OE | Valeo |
|---|---|---|---|---|---|---|---|---|
| 1.6 i,1.6 i 16V BA0/0/4/B/F, BA1/1/C J/K, DA0/4/B, DA1/1/J, EA0/4/B, EA1/1/J, KA0 4/B/F, KA1/1/J | E | 1598 | K4M,K7M | M | + | | 10/98 ▸ | 7701045816 | **696013** |
| 1.6 i,1.6 i 16V BA0/0/4/B/F, BA1/1/C J/K, DA0/4/B, DA1/1/J, EA0/4/B, EA1/1/J, KA0 4/B/F, KA1/1/J | E | 1598 | K4M,K7M | M | + | C | 10/98 ▸ 02/03 | 7701070217 | **696013** |
| 1.6 i,1.6 i 16V BA0/4/B/F, BA1/1/J DA0/4/B, EA0B, DA1/1/J, EA1/1/J, KA11, KA0 4/B | E | 1598 | K4M,K7M | A | + | | 10/98 ▸ 02/03 | 7701070217 | **696013** |
| 1.6 i,1.6 i 16V BA0/4/B/F, BA1/1/J DA0/4/B, EA0B, DA1/1/J, EA1/1/J, KA11, KA0 4/B | E | 1598 | K4M,K7M | A | + | | 02/99 ▸ | 7701045816 | **696013** |
| 1.8 i 16V KA1/2/A/R | E | 1783 | F4P | M | + | C | 06/00 ▸ 02/03 | 7701070217 | **696013** |
| 1.8 i 16V KA1/2/A/R | E | 1783 | F4P | M | + | C | 06/00 ▸ | 7701045816 | **696013** |
| 1.8 i 16V BA1/2/A/M/R | E | 1783 | F4P | M | | | 10/99 ▸ 08/02 | 7701070217 | **696013** |
| 1.8 i 16V BA1/2/A/M/R | E | 1783 | F4P | M | | | 10/99 ▸ 08/02 | 7701045816 | **696013** |
| 2.0 i 16V,2.0 ide 16V BA1/D, DA0/3/C/H/P DA1/3/S, EA0/3/C/P, EA1/3/S | E | 1998 | F4R,F5R,F7R | M | + | | 02/99 ▸ 02/03 | 7701070217 | **696013** |
| 2.0 i 16V,2.0 ide 16V BA1/D, DA0/3/C/H/P DA1/3/S, EA0/3/C/P, EA1/3/S | E | 1998 | F4R,F5R,F7R | M | + | | 02/99 ▸ | 7701045816 | **696013** |
| 1.9 D BA0R, SA0R | D | 1870 | F8Q | M | +/- | | 02/99 ▸ 08/02 | 7701045816 | **696013** |
| 1.9 D BA0R, SA0R | D | 1870 | F8Q | M | +/- | | 02/99 ▸ 08/02 | 7701070217 | **696013** |
| 1.9 D,1.9 dCi,1.9 dTi BA0/5/N, BA1/F/U DA0/5/N, KA1U, KA0/5/J/N, SA1U, SA0/5/N | D | 1870 | F8Q,F9Q | M | + | C | 10/98 ▸ 02/03 | 7701070217 | **696013** |
| 1.9 D,1.9 dCi,1.9 dTi BA0/5/N, BA1/F/U DA0/5/N, KA1U, KA0/5/J/N, SA1U, SA0/5/N | D | 1870 | F8Q,F9Q | M | + | | 02/99 ▸ | 7701045816 | **696013** |
| 1.9 dCi,1.9 dTi BA0/5/N, DA0/5/N KA0/5/N | D | 1870 | F9Q | A | + | C | 10/98 ▸ 02/03 | 7701070217 | **696013** |
| 1.9 dCi,1.9 dTi BA0/5/N, DA0/5/N KA0/5/N | D | 1870 | F9Q | A | + | | 02/99 ▸ | 7701045816 | **696013** |

## MEGANE CLASSIC (96>99)

| | | | | | | | | | |
|---|---|---|---|---|---|---|---|---|---|
| 1.4 i LA0/E/V | E | 1390 | E7J | M | + | C | 09/96 ▸ 02/99 | 7701070217 | **696013** |
| 1.4 i LA0/E/V | E | 1390 | E7J | M | + | C | 09/96 ▸ 02/99 | 7701045816 | **696013** |
| 1.4 i LA0E ▸ 970507 | E | 1390 | E7J | M | + | C | 09/96 ▸ 05/97 | 7700784652 | **698313** |
| 1.6 e LA1C, LA0/F/L/S 970507 ▸ | E | 1598 | K7M | M | + | C | 05/97 ▸ 02/99 | 7701070217 | **696013** |
| 1.6 e LA1C, LA0/F/L/S 970507 ▸ | E | 1598 | K7M | M | + | C | 05/97 ▸ 02/99 | 7701045816 | **696013** |
| 1.6 e LA0F 970507 ▸ | E | 1598 | K7M | A | + | C | 05/97 ▸ 02/99 | 7701070217 | **696013** |
| 1.6 e LA0F 970507 ▸ | E | 1598 | K7M | A | + | C | 05/97 ▸ 02/99 | 7701045816 | **696013** |
| 1.6 e LA1C, LA0/F/L/S ▸ 970507 | E | 1598 | K7M | M | + | C | 09/96 ▸ 05/97 | 7700784652 | **698313** |
| 1.6 e LA0F ▸ 970507 | E | 1598 | K7M | A | + | C | 09/96 ▸ 05/97 | 7700784652 | **698313** |
| 2.0 i LA0/7/G 970507 ▸ | E | 1998 | F3R | M | + | C | 05/97 ▸ 02/99 | 7701070217 | **696013** |
| 2.0 i LA0/7/G 970507 ▸ | E | 1998 | F3R | M | + | C | 05/97 ▸ 02/99 | 7701045816 | **696013** |
| 2.0 i LA0/7/G 970507 ▸ | E | 1998 | F3R | A | + | C | 05/97 ▸ 02/99 | 7701045816 | **696013** |
| 2.0 i LA0/7/G 970507 ▸ | E | 1998 | F3R | A | + | C | 05/97 ▸ 02/99 | 7701070217 | **696013** |
| 2.0 i LA0/7/G ▸ 970507 | E | 1998 | F3R | M | + | C | 09/96 ▸ 05/97 | 7700784652 | **698313** |
| 2.0 i LA0/7/G ▸ 970507 | E | 1998 | F3R | A | + | C | 09/96 ▸ 05/97 | 7700784652 | **698313** |
| 1.9 D,1.9 dT LA0/A/K/R/U/Y 970507 ▸ | D | 1870 | F8Q | M | +/- | C | 05/97 ▸ 02/99 | 7701045816 | **696013** |
| 1.9 D,1.9 dT LA0/A/K/R/U/Y 970507 ▸ | D | 1870 | F8Q | M | +/- | C | 05/97 ▸ 02/99 | 7701070217 | **696013** |
| 1.9 dTi LA1U, LA0/8/N 970507 ▸ | D | 1870 | F9Q | M | + | C | 05/97 ▸ 02/99 | 7701070217 | **696013** |
| 1.9 dTi LA1U, LA0/8/N 970507 ▸ | D | 1870 | F9Q | M | + | C | 05/97 ▸ 02/99 | 7701045816 | **696013** |

Fan Motor + Blades Moteur + hélice Lüftermotor + Lüfterrad Motorino + Ventola Ventilatormotor Fan motoru + Kanatlar
Moto-ventilador + Aspas Мотор вентилятора + лопасти вентилятора Ventilátor motor és lapát Motor sahary + vrtule Ventilator motor + Lame Μοτέρ ανεμιστήρων + Πτερωτές



• **New** Nouveau **Nuevo** Novo **Nuovo** Nieuw **Neu** Nowość **Yeni** Новый Νέο **Novy**

| Type Ctr. | | CC | | AC | | | OE | Valeo | |
|---|---|---|---|---|---|---|---|---|---|

# RENAULT (.../...)

## MEGANE CLASSIC (96>99) (.../...)

| | | | | | | | | | | |
|---|---|---|---|---|---|---|---|---|---|---|
| 1.9 dTi 970507 ▸ | LA0N | D | 1870 | F9Q | A | + | C | 05/97 ▸ 02/99 | 7701045816 | 696013 |
| 1.9 dTi 970507 ▸ | LA0N | D | 1870 | F9Q | A | + | C | 05/97 ▸ 02/99 | 7701070217 | 696013 |
| 1.9 D,1.9 dT ▸ 970507 | LA0/A/K/R/U/Y | D | 1870 | F8Q | M | +/- | C | 09/96 ▸ 05/97 | 7700784652 | 698313 |
| 1.9 dTi ▸ 970507 | LA1U, LA0/8/N | D | 1870 | F9Q | M | + | C | 04/97 ▸ 05/97 | 7700784652 | 698313 |
| 1.9 dTi | LA0N | D | 1870 | F9Q | A | + | C | 04/97 ▸ 05/97 | 7700784652 | 698313 |

## MEGANE CLASSIC (99>2002)

| | | | | | | | | | | |
|---|---|---|---|---|---|---|---|---|---|---|
| 1.4 i,1.4 i 16V | LA0/D/V/W, LA1/0/H | E | 1390 | E7J,K4J | M | + | | 03/99 ▸ 08/02 | 7701070217 | 696013 |
| 1.4 i,1.4 i 16V | LA0/D/V/W, LA1/0/H | E | 1390 | E7J,K4J | M | + | | 03/99 ▸ 08/02 | 7701045816 | 696013 |
| 1.6 i 16V | LA0/0/4/B, LA1/1/J/K | E | 1598 | K4M | M | + | C | 03/99 ▸ 08/02 | 7701070217 | 696013 |
| 1.6 i 16V | LA0/0/4/B, LA1/1/J/K | E | 1598 | K4M | M | + | C | 03/99 ▸ 08/02 | 7701045816 | 696013 |
| 1.6 i | LA1C | E | 1598 | K7M | M | | | 03/99 ▸ 05/00 | 7701045816 | 696013 |
| 1.6 i | LA1C | E | 1598 | K7M | M | | | 03/99 ▸ 05/00 | 7701070217 | 696013 |
| 1.6 i 16V | LA0/4/B, LA1/1/J | E | 1598 | K4M | A | + | C | 03/99 ▸ 08/02 | 7701045816 | 696013 |
| 1.6 i 16V | LA0/4/B, LA1/1/J | E | 1598 | K4M | A | + | C | 03/99 ▸ 08/02 | 7701070217 | 696013 |
| 1.8 i 16V | LA1/2/A/M/R | E | 1783 | F4P | M | + | C | 07/00 ▸ 08/02 | 7701070217 | 696013 |
| 1.8 i 16V | LA1/2/A/M/R | E | 1783 | F4P | M | + | C | 07/00 ▸ 08/02 | 7701045816 | 696013 |
| 2.0 i 16V | LA1/D/L | E | 1998 | F4R | M | + | | 01/01 ▸ 10/01 | 7701045816 | 696013 |
| 2.0 i 16V | LA1/D/L | E | 1998 | F4R | M | + | | 01/01 ▸ 10/01 | 7701070217 | 696013 |
| 1.9 D,1.9 dCi,1.9 dTi | LA1U, LA0/1/5/N/R | D | 1870 | F8Q,F9Q | M | + | C | 03/99 ▸ 08/02 | 7701045816 | 696013 |
| 1.9 D,1.9 dCi,1.9 dTi | LA1U, LA0/1/5/N/R | D | 1870 | F8Q,F9Q | M | + | | 03/99 ▸ 08/02 | 7701070217 | 696013 |
| 1.9 dCi,1.9 dTi | LA0/5/N | D | 1870 | F9Q | A | + | | 03/99 ▸ 08/02 | 7701070217 | 696013 |
| 1.9 dCi,1.9 dTi | LA0/5/N | D | 1870 | F9Q | A | + | C | 03/99 ▸ 08/02 | 7701045816 | 696013 |

## MÉGANE II (2002>)

| | | | | | | | | | | |
|---|---|---|---|---|---|---|---|---|---|---|
| 1.6 i 16V,1.6 i GPL 16V | KM0Y, LM0Y, BM0/Y | F | 1598 | K4M | M | + | | 09/02 ▸ 10/08 | 7701054966 | 696287 |
| 1.6 i 16V,1.6 i GPL 16V | KM0Y, LM0Y, BM0/Y | F | 1598 | K4M | M | - | | 09/02 ▸ | 7701051492 | 696286 |
| 1.4 i 16V | BM1A, BM0/8/B/H, CM0 8/B/H, KM0/B/H, LM1A, LM0/8/B/H | E | 1390 | K4J | M | + | | 09/02 ▸ 12/05 | 7701054966 | 696287 |
| 1.4 i 16V | BM1A, BM0/8/B/H, CM0 8/B/H, KM0/B/H, LM1A, LM0/8/B/H | E | 1390 | K4J | M | - | | 09/02 ▸ | 7701051492 | 696286 |
| 1.6 i 16V | BM1B, BM0/C/J, CM1B CM0/C/J, EM1B, EM0/C/J, KM1B, KM0/C/J, LM1B LM0/C/J | E | 1598 | K4M | M | + | | 09/02 ▸ 10/08 | 7701054966 | 696287 |
| 1.6 i 16V | BM1B, BM0/C/J, CM1B CM0/C/J, EM1B, EM0/C/J, KM1B, KM0/C/J, LM1B LM0/C/J | E | 1598 | K4M | M | - | | 09/02 ▸ | 7701051492 | 696286 |
| 1.6 i 16V | BM1B, BM0/C/J, EM1B EM0/C/J, KM1B, KM0/C/J, LM1B, LM0/C/J | E | 1598 | K4M | A | + | | 09/02 ▸ 10/08 | 7701054966 | 696287 |
| 1.6 i 16V | BM1B, BM0/C/J, EM1B EM0/C/J, KM1B, KM0/C/J, LM1B, LM0/C/J | E | 1598 | K4M | A | - | | 09/02 ▸ | 7701051492 | 696286 |
| 2.0 i 16V,2.0 i Turbo 16V | BM0/5/U/W, BM1/M/N/T U, CM0/5/U, CM1/M/N/U, EM0/5/U, EM1/N/U, KM0 5/U, KM1/M/N/U, LM0/5/U, LM1/M/N/U | E | 1998 | F4R | M | + | | 09/02 ▸ 07/09 | 7701054966 | 696287 |
| 2.0 i 16V,2.0 i Turbo 16V | BM0/5/M/U/W, BM1/1/M N/T/U/V, CM0/5/M/U/W, CM1/M/N/U, EM0/5/U/W EM1/N/T/U, KM0/5/U, KM1/M/N/U, LM0/5/U, LM1 M/N/U | E | 1998 | F4R | M | - | | 09/02 ▸ | 7701051492 | 696286 |
| 2.0 i 16V | BM0/5/U, BM1/M/U CM0/5/U, EM0/5/U, EM1/M/N/U, KM0/5/U, KM1/M N/U, LM0/5/U, LM1/M/N/U | E | 1998 | F4R | A | + | | 09/02 ▸ 07/09 | 7701054966 | 696287 |
| 2.0 i 16V | BM0/5/U, BM1/M/U CM0/5/U, EM0/5/U, EM1/M/N/U, KM0/5/U, KM1/M N/U, LM0/5/U, LM1/M/N/U | E | 1998 | F4R | A | - | | 09/02 ▸ | 7701051492 | 696286 |
| 1.5 dCi | BM13, BM0/2/F/T, CM0 2/F, GM0/2/F, KM0/2/F/T, KM1/3/F, LM0/2/F/T LM1/3/F, SM0/2/F | D | 1461 | K9K | M | + | | 09/02 ▸ 10/08 | 7701054966 | 696287 |
| 1.5 dCi | BM0/2/F/T, BM1/3/E/F CM0/2/F, EM1E, CM1/E/F, GM0/2/F, GM1/E/F KM0/2/F/T, KM1/3/E/F, LM0/2/F/T, LM1/3/E/F SM0/2/F, SM1/E/F | D | 1461 | K9K | M | - | | 09/02 ▸ | 7701051492 | 696286 |
| 1.5 dCi | CM02, KM02, LM02 BM0/2 | D | 1461 | K9K | A | - | | 09/03 ▸ | 7701051492 | 696286 |

# RENAULT (.../...)

## MÉGANE II (2002>) (.../...)

| Type Ctr. | | CC | | | AC | | 2+3 | OE | Valeo | |
|---|---|---|---|---|---|---|---|---|---|---|
| 1.9 dCi BM0/0/G/L, BM1/4/7/C D/G, CM0/0/G/L, EM0G, CM1/4/7/C/D/G, EM1/4/7 C/D/G, KM0/0/G/L, KM1/4/7/C/D/G, LM0/0/G/L LM1/4/7/C/D/G | D | 1870 | F9Q | M | + | | 09/02 ▸ | 7701054966 | **696287** | |
| 1.9 dCi BM0/0/G/L, BM1/4/7/C D/G, CM0/0/G/L, EM0G, CM1/4/7/C/D/G, EM1/4/7 C/D/G, KM0/0/G/L, KM1/4/7/C/D/G, LM0/0/G/L LM1/4/7/C/D/G | D | 1870 | F9Q | M | - | | 09/02 ▸ | 7701051492 | **696286** | |
| 1.9 dCi EM14 | D | 1870 | F9Q | A | + | | 05/05 ▸ 07/09 | 7701054966 | **696287** | |
| 1.9 dCi EM14 | D | 1870 | F9Q | A | - | | 05/05 ▸ | 7701051492 | **696286** | |
| 2.0 dCi CM1K, EM1K, KM1K LM1K, BM1/K | D | 1995 | M9R | M | - | | 01/06 ▸ | 7701051492 | **696286** | |

## MÉGANE III (2008>)

| | | | | | | | | | | |
|---|---|---|---|---|---|---|---|---|---|---|
| 1.6 i 110 16V DZ03, KZ03, BZ0/3 | F | 1598 | K4M | M | | | 10/08 ▸ | 214810011R | **696229** | |
| 1.6 i 110 16V DZ03, KZ03, BZ0/3 | F | 1598 | K4M | M | | | 10/08 ▸ | 214810028R | **696229** | |
| 1.6 i 100 16V BZ0/H/U, BZ1/B/H<br>1.6 i 110 16V DZ0/H/U, DZ1/B/H KZ1B, KZ0/H/U | E | 1598 | K4M | M | | | 10/08 ▸ | 214810011R | **696229** | |
| 1.6 i 100 16V BZ0/H/U, BZ1/B/H<br>1.6 i 110 16V DZ0/H/U, DZ1/B/H KZ1B, KZ0/H/U | E | 1598 | K4M | M | | | 10/08 ▸ | 214810028R | **696229** | |
| 2.0 i 140 16V DZ0G, DZ1E, KZ0G BZ0/G | E | 1997 | M4R | A | | | 10/08 ▸ | 214810028R | **696229** | |
| 2.0 TCe 180 16V BZ0/K, KZ0K, DZ0/4/K | E | 1998 | F4R | M | | | 10/08 ▸ | 214810028R | **696229** | |
| 1.5 dCi 105,1.5 dCi 110 BZ0/A/B/C/D, BZ1/A/F<br>1.5 dCi 85,1.5 dCi 90 G/M/W, DZ0/A/B/C/D DZ1/A/F/G/M/W, KZ0/C/D, KZ1/A/F/G/M/W | D | 1461 | K9K | M | | | 10/08 ▸ | 214810028R | **696229** | |
| 1.5 dCi 105,1.5 dCi 110,1.5 dCi 85<br>1.5 dCi 90 | D | 1461 | K9K | M | | | 07/08 ▸ | 214810898R | **•696376** | |
| 1.6 i 100 16V,1.6 i 110 16V | E | 1598 | K4M | M | | | 10/08 ▸ | 214810898R | **•696376** | |
| 1.9 dCi | D | 1870 | F9Q | M | | | 03/08 ▸ | 214810898R | **•696376** | |
| 2.0 i 140 16V | E | 1997 | M4R | A | | | 06/08 ▸ | 214810898R | **•696376** | |
| 2.0 TCe 180 16V | E | 1998 | F4R | M | | | 06/08 ▸ | 214810898R | **•696376** | |
| 1.9 dCi 130 BZ0/J/N, BZ1/J/K/S DZ0/J/N, DZ1/J/K/S, KZ0/J/N | D | 1870 | F9Q | M | | | 10/08 ▸ | 214810028R | **696229** | |

## MEGANE SCENIC (96>99)

| | | | | | | | | | | |
|---|---|---|---|---|---|---|---|---|---|---|
| 1.4 i,1.4 i 16V JA0/E/W | E | 1390 | E7J,K4J | M | + | | 10/96 ▸ 09/99 | 7701045816 | **696013** | |
| 1.4 i,1.4 i 16V JA0/E/W | E | 1390 | E7J,K4J | M | + | | 10/96 ▸ 09/99 | 7701070217 | **696013** | |
| 1.6 i JA0/F/L | E | 1598 | K7M | M | + | | 10/96 ▸ 09/99 | 7701045816 | **696013** | |
| 1.6 i JA0/F/L | E | 1598 | K7M | M | + | | 10/96 ▸ 09/99 | 7701070217 | **696013** | |
| 1.6 i JA0F 970507 ▸ | E | 1598 | K7M | A | +/- | | 05/97 ▸ 09/97 | 7701045816 | **696013** | |
| 1.6 i JA0F 970507 ▸ | E | 1598 | K7M | A | +/- | | 05/97 ▸ 09/97 | 7701070217 | **696013** | |
| 1.6 i JA0F | E | 1598 | K7M | A | + | | 09/97 ▸ 09/99 | 7701045816 | **696013** | |
| 1.6 i JA0F | E | 1598 | K7M | A | + | | 09/97 ▸ 09/99 | 7701070217 | **696013** | |
| 1.6 i JA0F ▸ 970507 | E | 1598 | K7M | A | + | | 10/96 ▸ 05/97 | 7701044184 | **696287** | |
| 1.6 i JA0F ▸ 970507 | E | 1598 | K7M | A | - | | 10/96 ▸ 05/97 | 7700784652 | **698313** | |
| 2.0 i JA0G | E | 1998 | F3R | M | + | | 04/97 ▸ 09/99 | 7701045816 | **696013** | |
| 2.0 i JA0G 970507 ▸ | E | 1998 | F3R | M | + | | 04/97 ▸ 09/99 | 7701070217 | **696013** | |
| 2.0 i JA0G 970507 ▸ | E | 1998 | F3R | A | +/- | | 05/97 ▸ 09/99 | 7701070217 | **696013** | |
| 2.0 i JA0G 970507 ▸ | E | 1998 | F3R | A | +/- | | 05/97 ▸ 09/99 | 7701045816 | **696013** | |
| 2.0 i JA0G | E | 1998 | F3R | A | + | | 10/96 ▸ 03/97 | 7701044184 | **696287** | |
| 2.0 i JA0G | E | 1998 | F3R | A | + | | 01/98 ▸ 09/98 | 7701070217 | **696013** | |
| 2.0 i JA0G | E | 1998 | F3R | A | + | | 01/98 ▸ 09/98 | 7701045816 | **696013** | |
| 2.0 i JA0G | E | 1998 | F3R | A | - | | 10/96 ▸ 03/97 | 7700784652 | **698313** | |
| 2.0 i JA0G ▸ 970507 | E | 1998 | F3R | M | + | | 10/96 ▸ 05/97 | 7701044184 | **696287** | |
| 2.0 i JA0G ▸ 970507 | E | 1998 | F3R | A | +/- | | 04/97 ▸ 05/97 | 7700784652 | **698313** | |
| 1.9 D,1.9 dT FA0/J/Y, JA0/J/K/Y | D | 1870 | F8Q | M | +/- | | 10/96 ▸ 09/99 | 7701044184 | **696287** | |
| 1.9 dTi JA0N | D | 1870 | F9Q | M | + | | 04/97 ▸ 09/99 | 7701070217 | **696013** | |

Fan Motor + Blades Moteur + hélice Lüftermotor + Lüfterrad Motorino + Ventola Ventilatormotor Fan motoru + Kanatlar
Moto-ventilador + Aspas Мотор вентилятора + лопасти вентилятора Ventilátor motor és lapát Motor sahary + vrtule Ventilator motor + Lame Μοτέρ ανεμιστήρων + Πτερωτές



• **New** Nouveau **Nuevo** Novo **Nuovo** Nieuw **Neu** Nowość **Yeni** Новый Νέο **Nový**

| Type Ctr. | | CC | | AC | | | OE | Valeo | |
|---|---|---|---|---|---|---|---|---|---|

# RENAULT (.../...)

## MEGANE SCENIC (96>99) (.../...)

| | | | | | | | | | | | |
|---|---|---|---|---|---|---|---|---|---|---|---|
| 1.9 dTi | JA0N | D | 1870 | F9Q | M | + | | 04/97 ▸ 09/99 | 7701045816 | **696013** | |

## MEGANE SCENIC (99>2003)

| | | | | | | | | | | | |
|---|---|---|---|---|---|---|---|---|---|---|---|
| 1.4 i 16V | JA0/D, JA1/0/H | E | 1390 | K4J | M | + | C | 09/99 ▸ | 7701045816 | **696013** | |
| 1.4 i 16V | JA0/D, JA1/0/H | E | 1390 | K4J | M | + | C | 09/99 ▸ 04/03 | 7701070217 | **696013** | |
| 1.6 i 16V,1.6 i GPL 16V | JA0/B, JA1/1/J | E | 1598 | K4M | M | + | C | 09/99 ▸ | 7701045816 | **696013** | |
| 1.6 i 16V,1.6 i GPL 16V | JA0/B, JA1/1/J | E | 1598 | K4M | M | + | C | 09/99 ▸ 04/03 | 7701070217 | **696013** | |
| 1.6 i 16V | JA0/B, JA1/1/J | E | 1598 | K4M | A | + | C | 09/99 ▸ 04/03 | 7701070217 | **696013** | |
| 1.6 i 16V | JA0/B, JA1/1/J | E | 1598 | K4M | A | + | C | 09/99 ▸ | 7701045816 | **696013** | |
| 1.8 i 16V | JA1/2/A/R | E | 1783 | F4P | M | + | C | 09/99 ▸ 04/03 | 7701070217 | **696013** | |
| 1.8 i 16V | JA1/2/A/R | E | 1783 | F4P | M | + | C | 09/99 ▸ | 7701045816 | **696013** | |
| 1.8 i 16V ▸ 010124 | JA1M | E | 1783 | F4P | M | + | C | 03/00 ▸ 01/01 | 7701044184 | **696287** | |
| 2.0 i 16V | JA1D | E | 1998 | F4R | M | + | C | 01/00 ▸ | 7701045816 | **696013** | |
| 2.0 i 16V | JA1D | E | 1998 | F4R | M | + | C | 08/01 ▸ 04/03 | 7701070217 | **696013** | |
| 2.0 i 16V ▸ 010124 | JA0/C, JA1/3/B/L/S | E | 1998 | F4R | M | + | C | 09/99 ▸ 01/01 | 7701044184 | **696287** | |
| 2.0 i 16V ▸ 010124 | JA0/C, JA1/3/L/S | E | 1998 | F4R | A | + | C | 09/99 ▸ 01/01 | 7701044184 | **696287** | |
| 1.9 dCi,1.9 dTi | JA0/1/5/N, JA1/F/U | D | 1870 | F9Q | M | + | C | 09/99 ▸ | 7701045816 | **696013** | |
| 1.9 dCi,1.9 dTi | JA0/1/5/N, JA1/F/U | D | 1870 | F9Q | M | + | C | 09/99 ▸ 04/03 | 7701070217 | **696013** | |
| 1.9 dCi,1.9 dTi | JA0/5/N | D | 1870 | F9Q | A | + | C | 09/99 ▸ | 7701045816 | **696013** | |
| 1.9 dCi,1.9 dTi | JA0/5/N | D | 1870 | F9Q | A | + | C | 09/99 ▸ 04/03 | 7701070217 | **696013** | |

## SAFRANE

| | | | | | | | | | | | |
|---|---|---|---|---|---|---|---|---|---|---|---|
| 2.0 i 16V | B54L | E | 1948 | N7Q | M | +/- | C | 09/96 ▸ 11/00 | 7701035436 | | |
| 2.0 i 16V | B54L | E | 1948 | N7Q | A | +/- | C | 09/96 ▸ 04/00 | 7701035436 | | |
| 2.0 i | B54E | E | 1995 | J7R | M | | C | 09/92 ▸ 09/96 | 7701035436 | | |
| 2.0 Si,2.0 i | B54/0/2/E | E | 1995 | J7R | A | | C | 05/92 ▸ 09/96 | 7701035436 | | |
| 2.2 Si,2.2 i | B54/1/3 | E | 2165 | J7T | A | | C | 05/92 ▸ 09/96 | 7701035436 | | |
| 2.5 i 20V | B54F | E | 2435 | N7U | M | +/- | C | 09/96 ▸ 11/00 | 7701035436 | | |
| 2.5 i 20V | B54F | E | 2435 | N7U | A | +/- | C | 09/96 ▸ 07/99 | 7701035436 | | |
| 3.0 i | B54N | E | 2946 | L7X | A | +/- | | 12/98 ▸ 11/00 | 7701035436 | | |
| 3.0 i | B54M | E | 2963 | Z7X | A | +/- | C | 09/96 ▸ 12/98 | 7701035436 | | |
| 3.0 i V6,3.0 i V6i<br>3.0 i V6i Biturbo | B54/4/5 | E | 2975 | Z7X | M | | C | 05/92 ▸ 09/96 | 7701035436 | | |
| 3.0 i V6 | B54/4/B/J | E | 2975 | Z7X | A | | C | 05/92 ▸ 09/96 | 7701035436 | | |
| 2.1 Dt | B546 | D | 2068 | J8S | M | | C | 05/92 ▸ 09/96 | 7701035691 | | |
| 2.2 TD | B54G | D | 2188 | G8T | M | - | C | 09/96 ▸ 11/00 | 7701035436 | | |
| 2.5 Dt | B548 | D | 2499 | S8U | M | | C | 04/93 ▸ 09/96 | 7701035436 | | |
| 2.5 Dt | B548 | D | 2499 | S8U | A | | C | 04/93 ▸ 09/96 | 7701035436 | | |

## SCENIC II

| | | | | | | | | | | | |
|---|---|---|---|---|---|---|---|---|---|---|---|
| 1.6 i GPL 16V | JM0Y | F | 1598 | K4M | M | - | | 05/03 ▸ | 7701051492 | **696286** | |
| 1.4 i 16V | JM1A, JM0/B/H | E | 1390 | K4J | M | - | | 05/03 ▸ | 7701051492 | **696286** | |
| 1.6 i 16V | JM1B, JM0/C/J | E | 1598 | K4M | M | - | | 05/03 ▸ | 7701051492 | **696286** | |
| 1.6 i 16V | JM1B, JM0/C/J | E | 1598 | K4M | A | - | | 05/03 ▸ | 7701051492 | **696286** | |
| 2.0 i 16V,2.0 i Turbo 16V | JM0/5/U/W, JM1/N/T/U | E | 1998 | F4R | M | - | | 05/03 ▸ | 7701051492 | **696286** | |
| 2.0 i 16V | JM0/5/U, JM1/M/N/U | E | 1998 | F4R | A | - | | 05/03 ▸ | 7701051492 | **696286** | |
| 1.5 dCi | JM0/2/F/T, JM1/3/E/F | D | 1461 | K9K | M | - | | 05/03 ▸ | 7701051492 | **696286** | |
| 1.5 dCi | JM02 | D | 1461 | K9K | A | - | | 05/03 ▸ | 7701051492 | **696286** | |
| 1.9 dCi | JM0/G/L, JM1/2/4/5/7 D/G | D | 1870 | F9Q | M | - | | 05/03 ▸ | 7701051492 | **696286** | |
| 2.0 dCi | JM1K | D | 1995 | M9R | M | - | | 01/06 ▸ | 7701051492 | **696286** | |

## SCENIC III (2009>)

| | | | | | | | | | | | |
|---|---|---|---|---|---|---|---|---|---|---|---|
| 1.6 i 110 16V | JZ03 | F | 1598 | K4M | M | | | 04/09 ▸ | 214810028R | **696229** | |
| 1.4 TCE 130 16V | JZ0F, JZ1V | E | 1397 | H4J | M | | | 04/09 ▸ | 214810028R | **696229** | |
| 1.4 TCE 130 16V | JZ1V,JZ0F | E | 1397 | H4J | M | | | 04/09 ▸ | 214810898R | **•696376** | |
| 1.6 i 110 16V | JZ0/U, JZ1/B/H | E | 1598 | K4M | M | | | 04/09 ▸ | 214810028R | **696229** | |
| 1.6 i 110 16V | JZ03,JZ0U,JZ1B | E | 1598 | K4M | M | | | 06/09 ▸ | 214810898R | **•696376** | |
| 2.0 i 140 16V | JZ0/G, JZ1/D/E | E | 1997 | M4R | A | | | 04/09 ▸ | 214810028R | **696229** | |
| 1.5 dCi 105,1.5 dCi 110<br>1.5 dCi 85 | JZ0/7/A/B/D, JZ1/G/M W | D | 1461 | K9K | M | | | 04/09 ▸ | 214810028R | **696229** | |
| 1.5 dCi 105,1.5 dCi 110<br>1.5 dCi 85 | JZ07,JZ0D,JZ1G | D | 1461 | K9K | M | | | 04/09 ▸ | 214810898R | **•696376** | |
| 1.9 dCi 130 | JZ0/J/N, JZ1/J/K/S | D | 1870 | F9Q | M | | | 04/09 ▸ | 214810028R | **696229** | |
| 1.9 dCi 130 | JZ0J,JZ0N,JZ1J,JZ1S | D | 1870 | F9Q | M | | | 04/09 ▸ | 214810898R | **•696376** | |
| 2.0 dCi 160 | JZ0L | D | 1995 | M9R | M | | | 04/09 ▸ | 214810028R | **696229** | |
| 2.0 dCi 150 | JZ0Y | D | 1995 | M9R | A | | | 04/09 ▸ | 214810028R | **696229** | |

| Type Ctr. | | CC | | | AC | | 2+3 | OE | Valeo | |
|---|---|---|---|---|---|---|---|---|---|---|
| **RENAULT (.../...)** | | | | | | | | | | |
| **SCENIC III (2009>) (.../...)** | | | | | | | | | | |
| 2.0 dCi 160 JZ0L | D | 1995 | M9R | M | | | 04/09 ▸ | 214810898R | •696376 | |
| 2.0 dCi 150 JZ0Y | D | 1995 | M9R | A | | | 04/09 ▸ | 214810898R | •696376 | |
| **VEL SATIS (2002>2005)** | | | | | | | | | | |
| 2.2 dCi 16V BJ0F | D | 2188 | G9T | A | | | 01/02 ▸ 01/05 | 7701050192 | 696288 | |
| **VEL SATIS (2005>)** | | | | | | | | | | |
| 2.2 dCi 16V BJ0H | D | 2188 | G9T | M | + | | 03/05 ▸ | 7701050192 | 696288 | |
| 2.2 dCi 16V BJ0F | D | 2188 | G9T | A | + | | 02/05 ▸ | 7701050192 | 696288 | |
| **RENAULT** | | | | | | | | | | |
| **EXPRESS (91>2003)** | | | | | | | | | | |
| 1.9 D F40/E/N/P/R | D | 1870 | F8Q | M | - | | 09/91 ▸ 08/97 | 7700784652 | 698313 | |
| **EXTRA (91>97)** | | | | | | | | | | |
| 1.9 D F40/E/N/R | D | 1870 | F8Q | M | | | 09/91 ▸ 08/97 | 7700784652 | 698313 | |
| **KANGOO (97>2003)** | | | | | | | | | | |
| 1.2 i FC0A, KC0A | E | 1149 | D7F | M | + | | 09/97 ▸ 02/03 | 7701070217 | 696013 | |
| 1.2 i FC0A, KC0A | E | 1149 | D7F | M | + | | 09/97 ▸ | 7701045816 | 696013 | |
| 1.4 i FC0H | E | 1390 | E7J | M | +/- | | 02/99 ▸ 02/03 | 7701070217 | 696013 | |
| 1.4 i FC0H | E | 1390 | E7J | M | +/- | | 02/99 ▸ | 7701045816 | 696013 | |
| 1.4 i FC0/C, KC0/C/H | E | 1390 | E7J | M | + | | 09/97 ▸ 02/03 | 7701070217 | 696013 | |
| 1.4 i FC0/C, KC0/C/H | E | 1390 | E7J | M | + | | 09/97 ▸ | 7701045816 | 696013 | |
| 1.4 i KC0H | E | 1390 | E7J | A | + | | 10/99 ▸ | 7701045816 | 696013 | |
| 1.4 i KC0H | E | 1390 | E7J | A | + | | 10/99 ▸ 02/03 | 7701070217 | 696013 | |
| 1.6 i FC00, KC00 | E | 1598 | K7M | M | +/- | | 12/99 ▸ | 7701045816 | 696013 | |
| 1.6 i FC00, KC00 | E | 1598 | K7M | M | +/- | | 12/99 ▸ 02/03 | 7701070217 | 696013 | |
| 1.9 DTi FC0U, KC0U | D | 1870 | F9Q | M | +/- | | 12/99 ▸ | 7701045816 | 696013 | |
| 1.9 DTi FC0U, KC0U | D | 1870 | F9Q | M | +/- | | 12/99 ▸ 02/03 | 7701070217 | 696013 | |
| **KANGOO (2003>2009)** | | | | | | | | | | |
| 1.2 i GPL FC0A, KC0A | G | 1149 | D7F | M | + | | 03/03 ▸ | 7701045816 | 696013 | |
| 1.2 i GPL FC0A, KC0A | G | 1149 | D7F | M | + | | 03/03 ▸ 09/07 | 7701070217 | 696013 | |
| 1.2 i 16V FC0/5/T/W, KC0/5/T/W | E | 1149 | D4F | M | +/- | | 03/03 ▸ | 7701045816 | 696013 | |
| 1.2 i 16V FC0/5/T/W, KC0/5/T/W | E | 1149 | D4F | M | +/- | | 03/03 ▸ 12/07 | 7701070217 | 696013 | |
| 1.2 i FC0/A, KC0/A/K | E | 1149 | D7F | M | + | | 03/03 ▸ | 7701045816 | 696013 | |
| 1.2 i FC0/A, KC0/A/K | E | 1149 | D7F | M | + | | 03/03 ▸ 12/05 | 7701070217 | 696013 | |
| **MASTER (97>2003)** | | | | | | | | | | |
| 2.5 D FD0A, HD0A, JD0A, UD0A, ED0/A 980213 ▸ | D | 2499 | S8U | M | + | | 09/97 ▸ 09/03 | 7701046205 | 698424 | |
| 2.5 D FD0A, HD0A, JD0A, UD0A, ED0/A | D | 2499 | S8U | M | + | | 09/97 ▸ 09/03 | 7701046206 | | |
| 2.5 D FD0A, HD0A, JD0A, UD0A, ED0/A | D | 2499 | S8U | M | - | | 09/97 ▸ 09/03 | 7701043673 | 698350 | |
| 2.5 D FD0A, HD0A, JD0A, UD0A, ED0/A | D | 2499 | S8U | M | - | | 09/97 ▸ 09/03 | 7701043675 | | |
| 2.5 D FD0A, HD0A, JD0A, UD0A, ED0/A ▸ 980213 | D | 2499 | S8U | M | + | | 09/97 ▸ 02/98 | 7701044402 | | |
| 2.8 dTi,2.8 dTi L2H1 FD0C, HD0C, JD0B UD0C, ED0/C | D | 2800 | S9W | M | + | | 01/98 ▸ 09/03 | 7701044402 | | |
| 2.8 dTi,2.8 dTi L2H1 FD0C, HD0C, JD0B UD0C, ED0/C | D | 2800 | S9W | M | + | | 01/98 ▸ 09/03 | 7701046205 | 698424 | |
| 2.8 dTi,2.8 dTi L2H1 FD0C, HD0C, JD0B UD0C, ED0/C 000203 ▸ | D | 2800 | S9W | M | - | | ▸ 09/03 | 7701059544 | 698412 | |
| 2.8 dTi,2.8 dTi L2H1 FD0C, HD0C, JD0B UD0C, ED0/C 000203 ▸ | D | 2800 | S9W | M | - | | ▸ 09/03 | 7701049603 | 698412 | |
| 2.8 dTi,2.8 dTi L2H1 FD0C, HD0C, JD0B UD0C, ED0/C | D | 2800 | S9W | M | - | | 01/98 ▸ | 7701043698 | 698412 | |
| **MASTER (2003>2006)** | | | | | | | | | | |
| 1.9 dCi FD0P, JD0P | D | 1870 | F9Q | M | + | | 10/03 ▸ 05/06 | 7701046205 | 698424 | |
| 1.9 dCi FD0P, JD0P | D | 1870 | F9Q | M | - | | 10/03 ▸ 05/06 | 7701059544 | 698412 | |
| 2.2 dCi JD0N | D | 2188 | G9T | M | + | | 10/03 ▸ 05/06 | 7701046205 | 698424 | |
| 2.2 dCi JD0N | D | 2188 | G9T | M | - | | 10/03 ▸ 05/06 | 7701059544 | 698412 | |
| 2.5 dCi ED0/U/V, FD0/U/V JD0M, HD0/U/V, UD0/U/V | D | 2464 | G9U | M | + | | 10/03 ▸ 05/06 | 7701046205 | 698424 | |

Fan Motor + Blades Moteur + hélice Lüftermotor + Lüfterrad Motorino + Ventola Ventilatormotor Fan motoru + Kanatlar
Moto-ventilador + Aspas Мотор вентилятора + лопасти вентилятора Ventilátor motor és lapát Motor sahary + vrtule Ventilator motor + Lame Μοτέρ ανεμιστήρων + Πτερωτές



• **New** Nouveau **Nuevo** Novo **Nuovo** Nieuw **Neu** Nowość **Yeni** Новый Νέο **Novy**

| Type | Ctr. | CC | | AC | | | | OE | Valeo | |
|---|---|---|---|---|---|---|---|---|---|---|
| **RENAULT (.../...)** | | | | | | | | | | |
| **MASTER (2003>2006) (.../...)** | | | | | | | | | | |
| 2.5 dCi | ED0/U/V, FD0/U/V JD0M, HD0/U/V, UD0/U/V | D | 2464 | G9U | M | - | | 10/03 ▸ 05/06 | 7701059544 | **698412** |
| 3.0 dCi | FD0S, HD0S, JD0T UD0S, ED0/S | D | 2953 | ZD3 | M | + | | 10/03 ▸ 05/06 | 7701046205 | **698424** |
| 3.0 dCi | FD0S, HD0S, JD0T UD0S, ED0/S | D | 2953 | ZD3 | M | - | | 10/03 ▸ 05/06 | 7701059544 | **698412** |
| **RAPID II (91>98)** | | | | | | | | | | |
| 1.9 D | F40/N/P | D | 1870 | F8Q | M | | | 09/91 ▸ 03/98 | 7700784652 | **698313** |
| **TRAFIC (97>2001)** | | | | | | | | | | |
| 1.9 D | T55/J/L, TF1/J/L, TF2/J/L, TF3/J/L, THB/J/L | D | 1870 | F8Q | M | | | 09/97 ▸ 03/01 | 7701045816 | **696013** |
| 1.9 D | T55/J/L, TF1/J/L, TF2/J/L, TF3/J/L, THB/J/L | D | 1870 | F8Q | M | | | 09/97 ▸ 03/01 | 7701070217 | **696013** |
| **TRAFIC (2001>2006)** | | | | | | | | | | |
| 2.0 i 16V | FL0A, JL0A, EL0/A | E | 1998 | F4R | M | + | C | 04/01 ▸ | 7701050192 | **696288** |
| 1.9 dCi | EL0/C, FL0/B/C, JL0 B/C | D | 1870 | F9Q | M | + | C | 04/01 ▸ | 7701050192 | **696288** |
| 2.5 dCi 16V | FL0D, JL0D, EL0/D | D | 2464 | G9U | M | + | | 09/02 ▸ | 7701050192 | **696288** |
| **SAAB** | | | | | | | | | | |
| **9-3 (2002>)** | | | | | | | | | | |
| 1.8 t Turbo 16V,2.0 t Turbo 16V | | F | 1998 | B207L,B207R | M | + | Left/gauche | 07/07 ▸ | 12801550 | **696002** |
| 1.8 t Turbo 16V,2.0 t Turbo 16V | | F | 1998 | B207L,B207R | M | + | Right/Droite | 07/07 ▸ | 12801549 | **696003** |
| 1.8 t Turbo 16V,2.0 t Turbo 16V | | F | 1998 | B207L,B207R | A | + | Left/gauche | 07/07 ▸ | 12801550 | **696002** |
| 1.8 t Turbo 16V,2.0 t Turbo 16V | | F | 1998 | B207L,B207R | A | + | Right/Droite | 07/07 ▸ | 12801549 | **696003** |
| 1.8 i 16V | FB55B | E | 1796 | Z18XE | M | + | C | 11/03 ▸ | 24410988 | **698844** |
| 1.8 t Turbo 16V<br>2.0 t Turbo 16V | FB/45F/45S/45Y/55F 75F/75S, FD/45F/45S 45Y, FF/45F/45S | E | 1998 | B207E,B207L,B207R | M | + | Left/gauche | 09/02 ▸ | 12801550 | **696002** |
| 1.8 t Turbo 16V<br>2.0 t Turbo 16V | FB/45F/45S/45Y/55F 75F/75S, FD/45F/45S 45Y, FF/45F/45S | E | 1998 | B207E,B207L,B207R | M | + | Right/Droite | 09/02 ▸ | 12801549 | **696003** |
| 1.8 t Turbo 16V<br>2.0 t Turbo 16V | FB/45F/45S/45Y/55F 75F/75S, FD/45F/45S 45Y, FF/45F/45S | E | 1998 | B207E,B207L,B207R | M | - | | 09/02 ▸ | 24410988 | **698844** |
| 1.8 t Turbo 16V<br>2.0 t Turbo 16V | FB/49F/49S/49Y/59F 59S/59Y/79F, FD/49F 49S/49Y, FF/49F/49S | E | 1998 | B207E,B207L,B207R | A | + | Left/gauche | 09/02 ▸ | 12801550 | **696002** |
| 1.8 t Turbo 16V<br>2.0 t Turbo 16V | FB/49F/49S/49Y/59F 59S/59Y/79F, FD/49F 49S/49Y, FF/49F/49S | E | 1998 | B207E,B207L,B207R | A | + | Right/Droite | 09/02 ▸ | 12801549 | **696003** |
| 1.8 t Turbo 16V<br>2.0 t Turbo 16V | FB/49F/49S/49Y/59F 59S/59Y/79F, FD/49F 49S/49Y, FF/49F/49S | E | 1998 | B207E,B207L,B207R | A | - | C | 09/02 ▸ | 24410988 | **698844** |
| 2.8 t V6 24V | | E | 2792 | B284,B284L | M | + | Right/Droite | 06/05 ▸ | 13114369 | **696027** |
| 2.8 t V6 24V | | E | 2792 | B284,B284L | M | + | Left/gauche | 06/05 ▸ | 13182322 | **696030** |
| 2.8 t V6 24V | | E | 2792 | B284,B284L | A | + | Right/Droite | 06/05 ▸ | 13114369 | **696027** |
| 2.8 t V6 24V | | E | 2792 | B284,B284L | A | + | Left/gauche | 06/05 ▸ | 13182322 | **696030** |
| 1.9 TiD 16V | | D | 1910 | Z19DTH | M | + | Left/gauche | 06/04 ▸ 12/05 | 13182322 | **696030** |
| 1.9 TiD,1.9 TiD 16V | | D | 1910 | Z19DT,Z19DTH | M | + | Right/Droite | 06/04 ▸ | 13114369 | **696027** |
| 1.9 TiD,1.9 TiD 16V | | D | 1910 | Z19DT,Z19DTH | M | + | | 06/04 ▸ | 13114368 | **696026** |
| 1.9 TiD 16V | | D | 1910 | Z19DTH | A | + | Right/Droite | 06/04 ▸ 11/05 | 13167336 | **696079** |
| 1.9 TiD 16V | | D | 1910 | Z19DTH | A | + | Left/gauche | 06/04 ▸ | 13167337 | **696080** |
| 1.9 TiD 16V | | D | 1910 | Z19DTH | A | + | | 01/06 ▸ | 13114369 | **696027** |
| 1.9 TiD 16V | | D | 1910 | Z19DTH | A | + | | 02/06 ▸ | 13114368 | **696026** |
| 2.2 TiD 16V | FB46D, FD46D | D | 2171 | D223L-125 | M | + | Right/Droite | 09/02 ▸ | 13114369 | **696027** |
| 2.2 TiD 16V | FB45D, FD45D | D | 2171 | D223L-125 | M | | Left/gauche | 09/02 ▸ 07/04 | 12801549 | **696003** |
| 2.2 TiD 16V | FB45D, FD45D | D | 2171 | D223L-125 | M | | Right/Droite | 09/02 ▸ 07/04 | 12801550 | **696002** |
| **SEAT** | | | | | | | | | | |
| **ALHAMBRA** | | | | | | | | | | |
| 1.8 i 20V | 7V8/3J5/9J5 | E | 1781 | AJH | M | +/- | | 10/98 ▸ 05/00 | 8D0959455C | **698155** |
| 1.8 i 20V | 7V8/3J5/3J8 | E | 1781 | AJH | A | +/- | | 05/98 ▸ 05/00 | 8D0959455C | **698155** |
| 2.0 i | 7V8/355/3S5/9S5 | E | 1984 | ADY | M | - | | 03/96 ▸ 05/00 | 6N0959455D | **696041** |
| 2.0 i | 7V89S8 | E | 1984 | ADY | A | - | | 06/96 ▸ 05/00 | 6N0959455D | **696041** |

# SEAT (.../...)

## ALHAMBRA (.../...)

| | | | CC | | | AC | | | | Valeo | |
|---|---|---|---|---|---|---|---|---|---|---|---|
| 1.9 TDi | 7V8/385/985 | D | 1896 | AFN | M | +/- | | 09/97 ▸ 05/00 | 8D0959455C | **698155** | |
| 1.9 TDi | 7V8/3X5/9X5 | D | 1896 | 1Z,AHU | M | - | | 03/96 ▸ 05/00 | 6N0959455D | **696041** | |
| 1.9 TDi | 7V8/388/988 | D | 1896 | AFN | A | +/- | | 09/97 ▸ 05/00 | 8D0959455C | **698155** | |

## ALTEA (2004>2009)

| | | | | | | | | | | | |
|---|---|---|---|---|---|---|---|---|---|---|---|
| 1.4 TSi 125 16V<br>1.4 i 86 16V | 5P1/1H2/2H1, 5P5/1E2<br>1H1/2H1 | E | 1390 | BXW,CAXC | M | +/- | Right/Droite | 05/06 ▸ 03/09 | 1K0959455DG | | |
| 1.4 TSi 125 16V<br>1.4 i 86 16V | 5P1/1H2/2H1, 5P5/1E2<br>1H1/2H1 | E | 1390 | BXW,CAXC | M | + | | 05/06 ▸ 03/09 | 1K0959455EA | | |
| 1.4 TSi 125 16V<br>1.4 i 86 16V | 5P1/1H2/2H1, 5P5/1E2<br>1H1/2H1 | E | 1390 | BXW,CAXC | M | + | Left/gauche | 05/06 ▸ | 1K0959455P | | |
| 1.6 i 102 | 5P1/1D2/2D2, 5P5/1D2<br>2D2/2J1 | E | 1595 | BGU,BSE,BSF | M | +/- | Right/Droite | 03/04 ▸ | 1K0959455DG | | |
| 1.6 i 102 | 5P1/1D2/2D2, 5P5/1D2<br>2D2/2J1 | E | 1595 | BGU,BSE,BSF | M | + | | 03/04 ▸ 03/09 | 1K0959455EA | | |
| 1.6 i 102 | 5P1/1D2/2D2, 5P5/1D2<br>2D2/2J1 | E | 1595 | BGU,BSE,BSF | M | + | | 03/04 ▸ | 1K0959455P | | |
| 1.6 i 102 | 5P1/1D2/2D2 | E | 1595 | BGU | M | | | 03/04 ▸ 05/05 | 1K0959455P | | |
| 1.6 i 102 | 5P12D2 | E | 1595 | BGU | M | | | 03/04 ▸ 05/05 | 1K0959455EA | | |
| 1.8 TFSi 160 16V | 5P5151 | E | 1798 | BYT | M | +/- | Right/Droite | 01/07 ▸ 06/07 | 1K0959455DG | | |
| 1.8 TFSi 160 16V | 5P5/151/251 | E | 1798 | BYT | M | +/- | Left/gauche | 01/07 ▸ | 1K0959455N | | |
| 1.8 FSi 160 16V<br>1.8 TFSi 160 16V<br>▸ 5P-8-070 000 | 5P1/151/251, 5P5/151<br>251 | E | 1798 | BYT,BZB | M | +/- | Right/Droite | 01/07 ▸ 04/08 | 1K0959455DH | | |
| 2.0 FSi 150 16V,2.0 TFSi<br>2.0 TFSi 200<br>2.0 TFSi 200 16V | 5P1/1M1/2M1/5P1, 5P5<br>1M1/2M1/2P1/8P1/8P4 | E | 1984 | BLR,BLY,BVY,BVZ,BWA | M | +/- | Left/gauche | 05/04 ▸ | 1K0959455P | | |
| 2.0 FSi 150 16V,2.0 TFSi<br>2.0 TFSi 200<br>2.0 TFSi 200 16V | 5P1/1M1/2M1/5P1, 5P5<br>1M1/2M1/2P1/8P1/8P4 | E | 1984 | BLR,BLY,BVY,BVZ,BWA | M | +/- | Right/Droite | 05/04 ▸ | 1K0959455DG | | |
| 2.0 FSi 150 16V,2.0 TFSi<br>2.0 TFSi 200<br>2.0 TFSi 200 16V | 5P1/1M1/2M1/5P1, 5P5<br>1M1/2M1/2P1/8P1/8P4 | E | 1984 | BLR,BLY,BVY,BVZ,BWA | M | +/- | Left/gauche | 05/04 ▸ | 1K0959455EA | | |
| 2.0 FSi 150 16V,2.0 TFSi<br>2.0 TFSi 200<br>2.0 TFSi 200 16V | 5P1/1M1/2M1/5P1, 5P5<br>1M1/2M1/2P1/8P1/8P4 | E | 1984 | BLR,BLY,BVY,BVZ,BWA | M | +/- | Left/gauche | 05/05 ▸ | 1K0959455N | | |
| 2.0 FSi 150 16V,2.0 TFSi<br>2.0 TFSi 200<br>2.0 TFSi 200 16V | 5P1/1M1/2M1/5P1, 5P5<br>1M1/2M1/2P1/8P1/8P4 | E | 1984 | BLR,BLY,BVY,BVZ,BWA | M | + | Right/Droite | 05/04 ▸ | 1K0959455DH | | |
| 2.0 FSi 150 16V | 5P12M1 | E | 1984 | BLR,BLY | M | | | 05/04 ▸ | 1K0959455N | | |
| 2.0 FSi 150 16V<br>2.0 TFSi 200 16V | 5P1/1M3/2M3/5P3, 5P5<br>1M3/2M3/2P3 | E | 1984 | BLR,BLY,BVY,BVZ,BWA | A | +/- | Left/gauche | 06/04 ▸ 03/09 | 1K0959455EA | | |
| 2.0 FSi 150 16V<br>2.0 TFSi 200 16V | 5P1/1M3/2M3/5P3, 5P5<br>1M3/2M3/2P3 | E | 1984 | BLR,BLY,BVY,BVZ,BWA | A | +/- | Right/Droite | 06/04 ▸ 03/09 | 1K0959455DG | | |
| 2.0 FSi 150 16V<br>2.0 TFSi 200 16V | 5P1/1M3/2M3/5P3, 5P5<br>1M3/2M3/2P3 | E | 1984 | BLR,BLY,BVY,BVZ,BWA | A | +/- | Left/gauche | 06/04 ▸ | 1K0959455P | | |
| 2.0 FSi 150 16V<br>2.0 TFSi 200 16V | 5P1/1M3/2M3/5P3, 5P5<br>1M3/2M3/2P3 | E | 1984 | BLR,BLY,BVY,BVZ,BWA | A | +/- | Left/gauche | 05/05 ▸ | 1K0959455N | | |
| 2.0 FSi 150 16V<br>2.0 TFSi 200 16V | 5P1/1M3/2M3/5P3, 5P5<br>1M3/2M3/2P3 | E | 1984 | BLR,BLY,BVY,BVZ,BWA | A | + | Right/Droite | 06/04 ▸ 03/09 | 1K0959455DH | | |
| 2.0 FSi 150 16V | 5P12M3 | E | 1984 | BLR,BLY | A | | Left/gauche | 06/04 ▸ 11/05 | 1K0959455N | | |
| 1.9 TDi 105 | 5P1/112/121/122/212<br>222, 5P5/112/122/212/222 | D | 1896 | BJB,BKC,BLS,BXE | M | +/- | | 04/04 ▸ | 1K0959455P | | |
| 1.9 TDi 105 | 5P1/112/121/122/212<br>222, 5P5/112/122/212/222 | D | 1896 | BJB,BKC,BLS,BXE | M | +/- | Right/Droite | 04/04 ▸ 03/09 | 1K0959455DG | | |
| 1.9 TDi 105 | 5P1/112/121/122/212<br>222, 5P5/112/122/212/222 | D | 1896 | BJB,BKC,BLS,BXE | M | +/- | | 04/04 ▸ 03/09 | 1K0959455EA | | |
| 1.9 TDi 105 | 5P1/112/121/122/212<br>222, 5P5/112/122/212/222 | D | 1896 | BJB,BKC,BLS,BXE | M | + | Right/Droite | 04/04 ▸ 03/09 | 1K0959455DH | | |
| 1.9 TDi 105 | 5P1/112/121/122/212<br>222, 5P5/112/122/212/222 | D | 1896 | BJB,BKC,BLS,BXE | M | + | Left/gauche | 04/04 ▸ | 1K0959455N | | |
| 1.9 TDi 105 | 5P1122 | D | 1896 | BLS | M | - | | 10/05 ▸ 03/09 | 1K0959455EA | | |
| 1.9 TDi 105 | 5P1122 | D | 1896 | BLS | M | - | Left/gauche | 10/05 ▸ | 1K0959455P | | |
| 1.9 TDi 105 | 5P1/112/212 | D | 1896 | BJB,BKC | M | | | 04/04 ▸ | 1K0959455N | | |
| 1.9 TDi 105 | 5P1212 | D | 1896 | BJB,BKC | M | | | 04/04 ▸ 05/06 | 1K0959455EA | | |
| 1.9 TDi 105 | 5P1/112/212 | D | 1896 | BJB,BKC | M | | | 04/04 ▸ 05/06 | 1K0959455P | | |

Fan Motor + Blades Moteur + hélice Lüftermotor + Lüfterrad Motorino + Ventola Ventilatormotor Fan motoru + Kanatlar
Moto-ventilador + Aspas Мотор вентилятора + лопасти вентилятора Ventilátor motor és lapát Motor sahary + vrtule Ventilator motor + Lame Μοτέρ ανεμιστήρων + Πτερωτές



• **New** Nouveau **Nuevo** Novo **Nuovo** Nieuw **Neu** Nowość **Yeni** Новый Νέο **Novy**

## ALTEA (2004>2009) (.../...)

| | | CC | | AC | | | | OE | Valeo | |
|---|---|---|---|---|---|---|---|---|---|---|
| 2.0 TDi 136 16V<br>2.0 TDi 140<br>2.0 TDi 140 16V<br>2.0 TDi 170 16V<br>2.0 TDi PD 170 16V | 5P1/131/171/231/241<br>261/271/561, 5P5/171<br>231/241/261/271/864<br>871 | D | 1968 | AZV,BKD,BMM/F,BMN | M | +/- | Left/gauche | 03/04 ▸ | 1K0959455P | | |
| 2.0 TDi 136 16V<br>2.0 TDi 140<br>2.0 TDi 140 16V<br>2.0 TDi 170 16V<br>2.0 TDi PD 170 16V | 5P1/131/171/231/241<br>261/271/561, 5P5/171<br>231/241/261/271/864<br>871 | D | 1968 | AZV,BKD,BMM/F,BMN | M | +/- | Left/gauche | 03/04 ▸ 03/09 | 1K0959455EA | | |
| 2.0 TDi 136 16V<br>2.0 TDi 140<br>2.0 TDi 140 16V<br>2.0 TDi 170 16V<br>2.0 TDi PD 170 16V | 5P1/131/171/231/241<br>261/271/561, 5P5/171<br>231/241/261/271/864<br>871 | D | 1968 | AZV,BKD,BMM/F,BMN | M | +/- | Right/Droite | 03/04 ▸ 03/09 | 1K0959455DG | | |
| 2.0 TDi 136 16V<br>2.0 TDi 140<br>2.0 TDi 140 16V<br>2.0 TDi 170 16V | 5P1/131/171/271, 5P5<br>171/231/241/261/271<br>864/871 | D | 1968 | AZV,BKD,BMM/F,BMN | M | +/- | Left/gauche | 05/05 ▸ | 1K0959455N | | |
| 2.0 TDi 136 16V<br>2.0 TDi 140<br>2.0 TDi 140 16V<br>2.0 TDi 170 16V<br>2.0 TDi PD 170 16V | 5P1/131/171/231/241<br>261/271/561, 5P5/171<br>231/241/261/271/864<br>871 | D | 1968 | AZV,BKD,BMM/F,BMN | M | + | Right/Droite | 03/04 ▸ 03/09 | 1K0959455DH | | |
| 2.0 TDi PD 170 16V | 5P1/261/561 | D | 1968 | BMN | M | + | Left/gauche | 01/06 ▸ | 1K0959455N | | |
| 2.0 TDi 136 16V<br>2.0 TDi 140 16V | 5P1/231/241 | D | 1968 | AZV,BKD | M | | Left/gauche | 03/04 ▸ | 1K0959455N | | |
| 2.0 TDi 136 16V<br>2.0 TDi 140<br>2.0 TDi 140 16V | 5P1/133/173/233/243<br>273, 5P5/233/243/273 | D | 1968 | AZV,BKD,BMM/F | A | +/- | Left/gauche | 06/04 ▸ | 1K0959455N | | |
| 2.0 TDi 136 16V<br>2.0 TDi 140<br>2.0 TDi 140 16V | 5P1/133/173/233/243<br>273, 5P5/233/243/273 | D | 1968 | AZV,BKD,BMM/F | A | +/- | Left/gauche | 06/04 ▸ 03/09 | 1K0959455EA | | |
| 2.0 TDi 136 16V<br>2.0 TDi 140<br>2.0 TDi 140 16V | 5P1/133/173/233/243<br>273, 5P5/233/243/273 | D | 1968 | AZV,BKD,BMM/F | A | +/- | Right/Droite | 06/04 ▸ 03/09 | 1K0959455DG | | |
| 2.0 TDi 136 16V<br>2.0 TDi 140<br>2.0 TDi 140 16V | 5P1/133/173/233/243<br>273, 5P5/233/243/273 | D | 1968 | AZV,BKD,BMM/F | A | +/- | Left/gauche | 06/04 ▸ | 1K0959455P | | |
| 2.0 TDi 136 16V<br>2.0 TDi 140<br>2.0 TDi 140 16V | 5P1/133/173/233/243<br>273, 5P5/233/243/273 | D | 1968 | AZV,BKD,BMM/F | A | + | Right/Droite | 06/04 ▸ 03/09 | 1K0959455DH | | |
| 2.0 TDi 136 16V<br>2.0 TDi 140 16V | 5P1/233/243 | D | 1968 | AZV,BKD | A | | Left/gauche | 06/04 ▸ | 1K0959455N | | |

## AROSA

| | | | | | | | | | | | |
|---|---|---|---|---|---|---|---|---|---|---|---|
| 1.0 i | 6H1/0B4/0C4/0H4/0H5/0L4/0W4/1B4 | E | 999 | AER,ALD,ALL,ANV,AUC | M | + | | 02/97 ▸ | 6X0959455A | **696042** | |
| 1.0 i | 6H1/0B4/0C4/0H4/0H5/0L4/0W4/1B4 | E | 999 | AER,ALD,ALL,ANV,AUC | M | + | | 02/97 ▸ 06/04 | 6X0959455F | **696042** | |
| 1.0 i | 6H1/0A4/0B4/0C4/0H4/0H5/0L4/0W4/1B4 | E | 999 | AER,AHT,ALD,ALL,ANV,AUC | M | - | | 02/97 ▸ 06/04 | 6N0959455D | **696041** | |
| 1.4 i | 6H1/0F4/0N4 | E | 1390 | AEX,ANW,APQ | M | + | | 02/97 ▸ | 6X0959455 | | |
| 1.4 i | 6H1/0F4/0N4 | E | 1390 | AEX,ANW,APQ | M | + | | 02/97 ▸ 07/00 | 6X0959455C | **696078** | |
| 1.4 i,1.4 i 16V | 6H1/0D4/0F4/0N4/0R4<br>0S4/0X4/1N4/2N4/3E4 | E | 1390 | AEX,AFK,AKK,AKV,ANW,APQ,AUB<br>AUD | M | + | | 02/97 ▸ 06/04 | 6X0959455F | **696042** | |
| 1.4 i,1.4 i 16V | 6H1/0D4/0F4/0N4/0R4<br>0S4/0X4/1N4/2N4/3E4 | E | 1390 | AEX,AFK,AKK,AKV,ANW,APQ,AUB<br>AUD | M | + | | 02/97 ▸ | 6X0959455A | **696042** | |
| 1.4 i,1.4 i 16V | 6H1/0D4/0F4/0N4/0R4<br>0S4/0X4/1N4/2N4/3E4 | E | 1390 | AEX,AFK,AKK,AKV,ANW,APQ,AUB<br>AUD | M | - | | 02/97 ▸ 06/04 | 6N0959455D | **696041** | |
| 1.4 i | 6H1/0D3/0F3/0X3/1N3/2N3 | E | 1390 | AEX,AKK,ANW,APQ,AUD | A | + | | 02/97 ▸ 06/04 | 6X0959455F | **696042** | |
| 1.4 i | 6H1/0D3/0F3/0X3 | E | 1390 | AEX,AKK,ANW,APQ | A | + | | 02/97 ▸ | 6X0959455A | **696042** | |
| 1.4 i | 6H1/0D3/0F3/0S3/1N3/2N3 | E | 1390 | AEX,AKV,ANW,APQ,AUD | A | + | | 02/97 ▸ 06/04 | 6X0959455C | **696078** | |
| 1.4 i | 6H10F3 | E | 1390 | AEX,APQ | A | + | | 02/97 ▸ 08/98 | 6X0959455 | | |
| 1.4 i | 6H1/0D3/0F3/0S3/0X3/1N3/2N3 | E | 1390 | AEX,AKK,AKV,ANW,APQ,AUD | A | - | | 02/97 ▸ 06/04 | 6N0959455D | **696041** | |
| 1.4 i | 6H10F3 | E | 1390 | APQ | A | | | 12/97 ▸ 08/98 | 6X0959455F | **696042** | |
| 1.4 i | 6H10F3 | E | 1390 | APQ | A | | | 12/97 ▸ 08/98 | 6X0959455A | **696042** | |
| 1.4 TDi | 6H1/094/194/294 | D | 1422 | AMF | M | - | C | 10/99 ▸ | 6N0959453N | **696196** | |
| 1.4 TDi<br>▸ 6H-1-004 286 | 6H1/094/194/294 | D | 1422 | AMF | M | +/- | Left/gauche | 10/99 ▸ 11/00 | 6N0959453P | **696196** | |
| 1.7 SDi | 6H1/074/0M4/174 | D | 1716 | AKU | M | + | | 08/97 ▸ | 6X0959455A | **696042** | |
| 1.7 SDi | 6H1/074/0M4/174 | D | 1716 | AKU | M | + | | 08/97 ▸ 10/03 | 6X0959455F | **696042** | |

# SEAT (.../...)

## AROSA (.../...)

| Type Ctr. | | CC | | AC | | | | OE | Valeo |
|---|---|---|---|---|---|---|---|---|---|
| 1.7 SDi 6H1/074/0M4/174 | D | 1716 | AKU | M | - | | 08/97 ▸ 10/03 | 6N0959455D | **696041** |

## CORDOBA (93>96)

| | | | | | | | | | |
|---|---|---|---|---|---|---|---|---|---|
| 1.4 i 6K2/2U2/2U3/2V2/3U2/3U3/3V2 | E | 1390 | AEX | M | - | Left/gauche | 09/95 ▸ 06/96 | 165959455T | **698368** |
| 1.4 i 6K2/2J1/2J2/2P1/2P2/2R1/2R2/3J1/3J2/3P1/3P2 3R1/3R2 | E | 1391 | ABD | M | - | Left/gauche | 11/93 ▸ 11/95 | 165959455T | **698368** |
| 1.6 i 6K2/2A1/2D1/2S1/3A1/3D1 | E | 1595 | 1F | M | - | Left/gauche | 11/93 ▸ 06/96 | 1H0959455D | **698367** |
| 1.6 i 6K2/2E1/2E2/3E1/3E2 | E | 1598 | ABU | M | - | Left/gauche | 11/93 ▸ 07/94 | 165959455T | **698368** |
| 1.6 i 6K2/2W1/2W2/3W1/3W2/8W1/8W2 | E | 1598 | AFT | M | - | Left/gauche | 09/95 ▸ 06/96 | 1H0959455D | **698367** |
| 1.8 i,1.8 i 16V 6K2/2D1/2F1/2M1/2T1 3C1/3F1/3M1/6G1/8C1/8G1 | E | 1781 | ABS,ACC,ADL,ADZ | M | - | | 11/93 ▸ 06/96 | 1H0959455D | **698367** |
| 1.8 i 6K2/2C2/2F2/2M2/3C2/3F2/3M2 | E | 1781 | ABS,ADZ | A | - | Left/gauche | 01/94 ▸ 06/96 | 1H0959455D | **698367** |
| 2.0 i 6K2/3H1/5H1/8H1 | E | 1984 | 2E | M | - | Left/gauche | 11/93 ▸ 06/96 | 1H0959455D | **698367** |
| 1.9 SDi 6K2/2Z2/372/3Z2 | D | 1896 | AEY | M | - | Left/gauche | 09/95 ▸ 06/96 | 165959455L | **696031** |
| 1.9 SDi 6K2/2Z2/372/3Z2 | D | 1896 | AEY | M | - | Left/gauche | 09/95 ▸ 06/96 | 165959455T | **698368** |

## CORDOBA (96>99)

| | | | | | | | | | |
|---|---|---|---|---|---|---|---|---|---|
| 1.0 i 6K2/261/361 | E | 999 | AER | M | - | Left/gauche | 06/97 ▸ 04/99 | 165959455L | **696031** |
| 1.0 i 6K2/261/361 | E | 999 | AER | M | - | Left/gauche | 06/97 ▸ 04/99 | 165959455T | **698368** |
| 1.4 i 6K5/2A3/2U2/2U3/2V2/3A3/3U2/3U3/3V2 | E | 1390 | AEX,AKV,ANX,APQ | M | +/- | Right/Droite | 05/97 ▸ 05/99 | 6K0959455B | **698358** |
| 1.4 i,1.4 i 16V 6K2/271/2A3/2U2/2U3 2V2/371/3A3/3U2/3U3/3V2 6K-V-110 001 ▸ | E | 1390 | AEX,AFH,AKV,ANX,APQ | M | + | Right/Droite | 02/97 ▸ 04/99 | 6K0959455B | **698358** |
| 1.4 i,1.4 i 16V 6K2/271/2A3/2U2/2U3 2V2/371/3A3/3U2/3U3/3V2, 6K5/2A3/3A3 6K-V-110 001, 6K-V-110001 ▸ | E | 1390 | AEX,AFH,AKV,ANX,APQ | M | + | Left/gauche | 02/97 ▸ 05/99 | 6K0959455A | **698357** |
| 1.4 i,1.4 i 16V 6K2/271/2U2/371 | E | 1390 | AEX,AFH | M | - | Left/gauche | 07/96 ▸ 04/99 | 165959455L | **696031** |
| 1.4 i,1.4 i 16V 6K2/271/2A3/2U2/2U3 2V2/371/3A3/3U2/3U3/3V2, 6K5/2A3/2U2/2U3/2V2 3A3/3U2/3U3/3V2 | E | 1390 | AEX,AFH,AKV,ANX,APQ | M | - | Left/gauche | 07/96 ▸ 05/99 | 165959455T | **698368** |
| 1.6 i 6K2/2D1/2S1/3D1/8D1 | E | 1595 | 1F | M | + | Left/gauche | 02/97 ▸ 04/99 | 6K0959455A | **698357** |
| 1.6 i 6K2/2D1/2S1/3D1/8D1 6K-V-110 001 ▸ | E | 1595 | 1F | M | + | Right/Droite | 02/97 ▸ 04/99 | 6K0959455B | **698358** |
| 1.6 i 6K2/2D1/2S1/3D1/8D1 | E | 1595 | 1F | M | - | Left/gauche | 07/96 ▸ 04/99 | 1H0959455D | **698367** |
| 1.6 i 6K5/2D4/3D4 | E | 1595 | 1F | A | +/- | Right/Droite | 05/97 ▸ 05/99 | 6K0959455B | **698358** |
| 1.6 i 6K2/2D4/3D4, 6K5/2D4/3D4 6K-V-110001 ▸ | E | 1595 | 1F | A | + | Left/gauche | 05/97 ▸ 05/99 | 6K0959455A | **698357** |
| 1.6 i 6K2/2D4/3D4 | E | 1595 | 1F | A | + | Right/Droite | 05/97 ▸ 04/99 | 6K0959455B | **698358** |
| 1.6 i 6K2/2D4/3D4, 6K5/2D4/3D4 | E | 1595 | 1F | A | - | Left/gauche | 05/97 ▸ 05/99 | 1H0959455D | **698367** |
| 1.6 i 6K2/2W2, 6K5/251/2F1/2W1/351/3F1/3W1/3W2 | E | 1598 | AEE,AFT,ALM | M | +/- | Right/Droite | 04/97 ▸ 05/99 | 6K0959455B | **698358** |
| 1.6 i 6K2/251/2F1/351/3F1/3W1/3W2/5W1/5W2/851/8F1 8W1/8W2 | E | 1598 | AEE,AFT,ALM | M | + | Right/Droite | 02/97 ▸ 04/99 | 6K0959455B | **698358** |
| 1.6 i 6K2/251/2F1/2W1/2W2/351/3F1/3W1/3W2/5W1/5W2 851/8F1/8W1/8W2 6K-V-110 001 ▸ | E | 1598 | AEE,AFT,ALM | M | + | Left/gauche | 02/97 ▸ 04/99 | 6K0959455A | **698357** |
| 1.6 i 6K2/251/351/851, 6K5/251/351 | E | 1598 | AEE | M | + | Right/Droite | 05/97 ▸ 12/98 | 6K0959455D | **698359** |
| 1.6 i 6K2/2W1/2W2/3W1/3W2/5W1/5W2/8W1/8W2, 6K5/2W1 3W1/3W2 | E | 1598 | AFT | M | - | Left/gauche | 07/96 ▸ 05/99 | 1H0959455D | **698367** |
| 1.6 i 6K2/251/2F1/351/3F1/851/8F1, 6K5/251/2F1/351 3F1 | E | 1598 | AEE,ALM | M | - | Left/gauche | 05/97 ▸ 05/99 | 165959455L | **696031** |
| 1.6 i 6K2/251/2F1/351/3F1/851/8F1, 6K5/251/2F1/351 3F1 | E | 1598 | AEE,ALM | M | - | Left/gauche | 05/97 ▸ 05/99 | 165959455T | **698368** |
| 1.8 i 6K52T1 | E | 1781 | ACC | M | +/- | Right/Droite | 10/98 ▸ 05/99 | 6K0959455B | **698358** |
| 1.8 i 6K52T1, 6K2/2M1/2T1/3M1 6K-V-110 001, 6K-V-110001 ▸ | E | 1781 | ACC,ADZ | M | + | Left/gauche | 02/97 ▸ 05/99 | 6K0959455A | **698357** |
| 1.8 i 6K2/2M1/2T1/3M1 6K-V-110 001 ▸ | E | 1781 | ACC,ADZ | M | + | Right/Droite | 02/97 ▸ 04/99 | 6K0959455B | **698358** |
| 1.8 i 6K2/2M1/3M1 6K-V-110 001 ▸ | E | 1781 | ADZ | M | + | Left/gauche | 02/97 ▸ 04/99 | 6K0959455C | **698360** |
| 1.8 i 6K52T1, 6K2/2M1/2T1/3M1 | E | 1781 | ACC,ADZ | M | - | Left/gauche | 07/96 ▸ 05/99 | 1H0959455D | **698367** |
| 1.8 i 6K2/2C2/2M2/3C2/3M2 6K-V-110 001 ▸ | E | 1781 | ADZ | A | + | Right/Droite | 02/97 ▸ 04/99 | 6K0959455D | **698359** |
| 1.8 i 6K2/2C2/2M2/3C2/3M2 6K-V-110 001 ▸ | E | 1781 | ADZ | A | + | Left/gauche | 02/97 ▸ 04/99 | 6K0959455A | **698357** |
| 1.8 i 6K2/2C2/2M2/3C2/3M2 6K-V-110 001 ▸ | E | 1781 | ADZ | A | + | Right/Droite | 02/97 ▸ 04/99 | 6K0959455B | **698358** |
| 1.8 i 6K2/2C2/2M2/3C2/3M2 6K-V-110 001 ▸ | E | 1781 | ADZ | A | + | Left/gauche | 02/97 ▸ 04/99 | 6K0959455C | **698360** |
| 1.8 i 6K2/2C2/2M2/3C2/3M2 | E | 1781 | ADZ | A | - | Left/gauche | 07/96 ▸ 04/99 | 1H0959455D | **698367** |
| 2.0 i 6K2/2L1/5L1/8L1 | E | 1984 | AGG | M | + | Left/gauche | 02/97 ▸ 04/99 | 6K0959455C | **698360** |

Fan Motor + Blades Moteur + hélice Lüftermotor + Lüfterrad Motorino + Ventola Ventilatormotor Fan motoru + Kanatlar
Moto-ventilador + Aspas Мотор вентилятора + лопасти вентилятора Ventilátor motor és lapát Motor sahary + vrtule Ventilator motor + Lame Μοτέρ ανεμιστήρων + Πτερωτές



• **New** Nouveau **Nuevo** Novo **Nuovo** Nieuw **Neu** Nowość **Yeni** Новый Νέο **Novy**

## CORDOBA (96>99) (.../...)

| | | | | | | | | | | |
|---|---|---|---|---|---|---|---|---|---|---|
| 2.0 i 6K2/2L1/5L1/8L1 | E | 1984 | AGG | M | + | Left/gauche | 02/97 ▸ 04/99 | 6K0959455A | 698357 | |
| 2.0 i 6K2/2L1/5L1/8L1 6K-V-110 001 ▸ | E | 1984 | AGG | M | + | Right/Droite | 02/97 ▸ 04/99 | 6K0959455B | 698358 | |
| 2.0 i,2.0 i 16V 6K2/2L1/5L1/611/811 8L1 6K-V-110 001 ▸ | E | 1984 | ABF,AGG | M | + | Right/Droite | 02/97 ▸ 04/99 | 6K0959455D | 698359 | |
| 2.0 i,2.0 i 16V 6K2/2L1/5L1/611/811 8L1 | E | 1984 | ABF,AGG | M | - | Left/gauche | 07/96 ▸ 04/99 | 1H0959455D | 698367 | |
| 1.9 D,1.9 SDi 6K2/2Y2/3Y2, 6K5/2Z2 3Z2 | D | 1896 | 1Y,AEY | M | +/- | Right/Droite | 02/97 ▸ 05/99 | 6K0959455B | 698358 | |
| 1.9 D 6K2/2Y2/3Y2 6K-V-110 001 ▸ | D | 1896 | 1Y | M | +/- | Left/gauche | 02/97 ▸ 04/99 | 6K0959455A | 698357 | |
| 1.9 TD 6K2/3E1/5E1 6K-V-110 001 ▸ | D | 1896 | AAZ | M | +/- | Right/Droite | 02/97 ▸ 08/97 | 6K0959455D | 698359 | |
| 1.9 SDi,1.9 TDi 6K2/2Z2/3Z2/581/881 6K-V-110 001 ▸ | D | 1896 | AEY,AFN | M | + | Left/gauche | 02/97 ▸ 04/99 | 6K0959455A | 698357 | |
| 1.9 D 6K2/2Y2/3Y2 6K-V-110 001 ▸ | D | 1896 | 1Y | M | + | Right/Droite | 02/97 ▸ 04/99 | 6K0959455D | 698359 | |
| 1.9 SDi 6K2/2Z2/3Z2 6K-V-110 001 ▸ | D | 1896 | AEY | M | + | Right/Droite | 02/97 ▸ 04/99 | 6K0959455B | 698358 | |
| 1.9 SDi 6K2/2Z2/3Z2, 6K5/2Z2 3Z2 | D | 1896 | AEY | M | + | Left/gauche | 02/97 ▸ 05/99 | 6K0959455C | 698360 | |
| 1.9 TD 6K2/3E1/5E1 | D | 1896 | AAZ | M | - | Right/Droite | 07/96 ▸ 08/97 | 6K0959455B | 698358 | |
| 1.9 SDi 6K2/2Z2/3Z2, 6K5/2Z2 3Z2 | D | 1896 | AEY | M | - | Left/gauche | 07/96 ▸ 05/99 | 165959455T | 698368 | |
| 1.9 SDi 6K2/2Z2/3Z2, 6K5/2Z2 3Z2 | D | 1896 | AEY | M | - | Left/gauche | 07/96 ▸ 05/99 | 165959455L | 696031 | |
| 1.9 TD 6K2/3E1/5E1 6K-V-110 001 ▸ | D | 1896 | AAZ | M | - | Left/gauche | 02/97 ▸ 08/97 | 6K0959455C | 698360 | |
| 1.9 TD 6K2/3E1/5E1 | D | 1896 | AAZ | M | - | Left/gauche | 02/97 ▸ 08/97 | 6K0959455A | 698357 | |

## CORDOBA (99>2002)

| | | | | | | | | | | |
|---|---|---|---|---|---|---|---|---|---|---|
| 1.0 i 6K2/2A6/2B6/2V6/3A6/3B6/3V6 | E | 999 | ALD,ANV,AUC | M | +/- | | 08/99 ▸ 08/02 | 6K0959455D | 698359 | |
| 1.0 i 6K2/2A6/2B6/2V6/3A6/3B6/3V6 | E | 999 | ALD,ANV,AUC | M | + | | 08/99 ▸ 08/02 | 6K0959455AA | 698528 | |
| 1.0 i 16V 6K2/2Y6/3Y6 | E | 999 | AVZ | M | + | | 05/00 ▸ 08/02 | 6K0959455B | 698358 | |
| 1.0 i 16V 6K2/2Q6/2Y6/3Y6 | E | 999 | AST,AVZ | M | - | | 05/00 ▸ 08/02 | 6K0959455D | 698359 | |
| 1.4 i,1.4 i 16V 6K2/2C6/2D6/2E6/2U6 3C6/3D6/3E6/3U6/8E6, 6K5/2C6/2D6/2E6/2U6/3C6 3D6/3E6/3U6 | E | 1390 | AKK,ANW,APE,AUD | M | + | | 05/99 ▸ 08/02 | 6K0959455B | 698358 | |
| 1.4 i 6K52D6, 6K2/2D6/3D6 | E | 1390 | AUD | M | + | | 06/00 ▸ 08/02 | 6K0959455AA | 698528 | |
| 1.4 i,1.4 i 16V 6K2/2C6/2D6/2E6/2R6 2U6/3C6/3D6/3E6/3R6/3U6/5R6/8E6, 6K5/2D6/2E6 2R6/2U6/3D6/3E6/3R6/3U6 | E | 1390 | AKK,ANW,APE,AQQ,AUB,AUD | M | - | | 05/99 ▸ 08/02 | 6K0959455D | 698359 | |
| 1.6 i 6K2/2H6/2S6/2T6/3H6/3T6/5H6/8H6/8T6, 6K5/2H6 3H6/5H6 | E | 1595 | AKL,APF,AUR | M | + | | 09/99 ▸ 08/02 | 6K0959455B | 698358 | |
| 1.6 i 6K25H6 | E | 1595 | AUR | M | + | | 07/00 ▸ 08/02 | 6K0959455AA | 698528 | |
| 1.6 i 6K2/2H6/2S6/2T6/3H6/3T6/5H6/5T6/8H6/8T6, 6K5 2H6/2S6/2T6/3H6/3T6/5H6/5T6 | E | 1595 | AKL,APF,AUR | M | - | | 05/99 ▸ 08/02 | 6K0959455AA | 698528 | |
| 1.6 i 6K2/2H6/2S6/2T6/3H6/3T6/5H6/5T6/8H6/8T6, 6K5 2H6/2S6/2T6/3H6/3T6/5H6/5T6 | E | 1595 | AKL,APF,AUR | M | - | | 05/99 ▸ 08/02 | 6K0959455D | 698359 | |
| 1.6 i 6K2/2G8/2S7/3G8 | E | 1595 | AEH,AKL | A | + | | 01/00 ▸ 08/02 | 6K0959455B | 698358 | |
| 1.6 i 6K2/2G8/2S7/3G8, 6K5/2G8/2S7/3G8 | E | 1595 | AEH,AKL | A | - | | 05/99 ▸ 08/02 | 6K0959455AA | 698528 | |
| 1.6 i 6K52S7, 6K2/2G8/2S7/3G8 | E | 1595 | AEH,AKL | A | - | | 01/00 ▸ 08/02 | 6K0959455D | 698359 | |
| 1.6 i 6K2/2F1/3F1/8F1, 6K5/2F1/3F1 | E | 1598 | ALM | M | + | | 05/99 ▸ 08/02 | 6K0959455B | 698358 | |
| 1.6 i 6K2/2F1/3F1/8F1 | E | 1598 | ALM | M | - | | 05/99 ▸ 08/02 | 6K0959455D | 698359 | |
| 1.8 i Turbo 20V 6K2/6J6/9J6 | E | 1781 | AQX | M | +/- | | 12/99 ▸ 08/02 | 6K0959455AA | 698528 | |
| 1.8 i Turbo 20V 6K2/6J6/9J6 | E | 1781 | AQX | M | + | | 12/99 ▸ 08/02 | 6K0959455D | 698359 | |
| 1.9 TDi 6K2/3X6/5X6/9X6 | D | 1896 | ASV | M | +/- | | 05/99 ▸ 08/02 | 6K0959455D | 698359 | |
| 1.9 TDi 6K2/2L6/2N6/3L6/3N6 3X6/5L6/5N6/5X6/8L6/8N6/9X6, 6K5/2L6/2N6/3L6 3N6/3X6/5L6/5N6/5X6 | D | 1896 | AGR,ALH,ASV | M | +/- | | 05/99 ▸ 08/02 | 6K0959455AA | 698528 | |
| 1.9 TDi 6K2/2L6/2N6/3L6/3N6 5L6/5N6/8L6/8N6, 6K5/2L6/2N6/3L6/3N6/3X6/5L6 5N6/5X6 | D | 1896 | AGR,ALH,ASV | M | + | | 05/99 ▸ 08/02 | 6K0959455D | 698359 | |
| 1.9 TDi 6K5/2N6/3N6/5N6 | D | 1896 | ALH | M | + | | 10/99 ▸ 08/02 | 6K0959455B | 698358 | |
| 1.9 SDi 6K2/2K6/2M6/3K6/3M6 6K5/2K6/2M6/3K6/3M6 | D | 1896 | AGP,AQM | M | - | | 05/99 ▸ 08/02 | 6K0959455D | 698359 | |

# SEAT (.../...)

## CORDOBA (99>2002) (.../...)

| | | | | | | | | | | | |
|---|---|---|---|---|---|---|---|---|---|---|---|
| 1.9 SDi | 6K2/2K6/3K6, 6K5/2K6 2M6/3K6/3M6 | D | 1896 | AGP,AQM | M | - | | 05/99 ▸ 08/02 | 6K0959455AA | **698528** | |

## CORDOBA (2002>)

| | | | | | | | | | | | |
|---|---|---|---|---|---|---|---|---|---|---|---|
| 1.2 i 12V | 6L2/2A4/3A4 | E | 1198 | BXV | M | +/- | | 05/06 ▸ 11/09 | 6Q0959455AD | | |
| 1.2 i 12V | 6L2/2D4/3D4 | E | 1198 | AZQ,BME | M | + | | 10/02 ▸ 06/06 | 6X0959455C | **696078** | |
| 1.2 i 12V | 6L2/2D4/3D4 | E | 1198 | BME | M | + | | 04/05 ▸ 06/06 | 6Q0959455AD | | |
| ▸ 6L-5-172 660 | | | | | | | | | | | |
| 1.2 i 12V | 6L23D4 | E | 1198 | AZQ | M | - | | 10/02 ▸ 04/04 | 6X0959455C | **696078** | |
| 1.2 i 12V | 6L2/2A4/2D4/3A4/3D4 | E | 1198 | AZQ,BME,BXV | M | - | | 10/02 ▸ 11/09 | 6Q0959455AF | **696019** | |
| 1.2 i 12V | 6L2/2D4/3D4 | E | 1198 | AZQ,BME | M | + | | 10/02 ▸ 06/06 | 6Q0959455J | | |
| ▸ 6L-3-130 434, 6L-5-172 659 | | | | | | | | | | | |
| 1.4 i 16V | 6L2/2G4/2H4/3G4/3H4 5H4 | E | 1390 | BBY,BBZ | M | +/- | | 09/02 ▸ 11/09 | 6X0959455C | **696078** | |
| 1.4 i 16V | 6L25G4 | E | 1390 | BBY | M | + | | 09/02 ▸ 04/04 | 6X0959455C | **696078** | |
| 1.4 i 16V | 6L2/2E4/3E4/5E4 | E | 1390 | BXW | M | + | | 05/06 ▸ 11/09 | 6Q0959455AD | | |
| 1.4 i 16V | 6L2/2E4/2G4/2H4/3E4 3G4/3H4/5E4/5G4/5H4 | E | 1390 | BBY,BBZ,BKY,BXW | M | - | | 09/02 ▸ 11/09 | 6Q0959455AF | **696019** | |
| 1.4 i 16V | 6L2/2E4/2G4/2H4/3E4 3G4/3H4/5E4/5H4 | E | 1390 | BBZ,BKY,BXW | M | - | | 10/02 ▸ 11/09 | 6E0959455A | | |
| 1.4 i 16V | 6L2/2E4/3E4/5E4 | E | 1390 | BXW | M | - | | 05/06 ▸ 11/09 | 6X0959455C | **696078** | |
| 1.4 i 16V | 6L2/2G3/3G3 | E | 1390 | BBY | A | +/- | | 10/02 ▸ | 6X0959455A | **696042** | |
| 1.4 i 16V | 6L2/2G3/3G3 | E | 1390 | BBY | A | +/- | | 10/02 ▸ 04/04 | 6X0959455F | **696042** | |
| 1.4 i 16V | 6L2/2G3/3G3 | E | 1390 | BBY | A | + | | 10/02 ▸ 04/04 | 1J0959455M | **698373** | |
| 1.4 i 16V | 6L2/2G3/3G3 | E | 1390 | BBY | A | + | | 10/02 ▸ 04/04 | 6X0959455C | **696078** | |
| 1.4 i 16V | 6L2/2G3/2G4/3G3/5G4 | E | 1390 | BKY | A | + | | 05/04 ▸ 12/07 | 6Q0959455AD | | |
| 1.4 i 16V | 6L2/2G3/2G4/3G3/5G4 | E | 1390 | BBY,BKY | A | - | | 10/02 ▸ 12/07 | 6E0959455A | | |
| 1.4 i 16V | 6L2/2G3/3G3 | E | 1390 | BBY | A | - | | 10/02 ▸ 04/04 | 6Q0959455AF | **696019** | |
| 1.4 i 16V | 6L2/2G4/2H4/3G4/3H4 5G4/5H4 | E | 1390 | BBY,BBZ | M | + | | 09/02 ▸ 11/09 | 6Q0959455J | | |
| ▸ 6L-3-130 434 | | | | | | | | | | | |
| 1.4 i 16V | 6L2/2G3/3G3 | E | 1390 | BBY | A | + | | 10/02 ▸ 11/02 | 6Q0959455J | | |
| ▸ 6L-3-130 434 | | | | | | | | | | | |
| 1.6 i | 6L2/2K4/3K4 | E | 1598 | BAH | M | +/- | | 04/03 ▸ 11/09 | 6X0959455C | **696078** | |
| 1.6 i | 6L2/2K4/3K4 | E | 1598 | BAH | M | +/- | | 04/03 ▸ 11/09 | 6Q0959455J | | |
| 1.6 i | 6L2/2C4/3C4/5C4 | E | 1598 | BTS | M | + | | 11/06 ▸ 11/09 | 6Q0959455AD | | |
| 1.6 i | 6L2/2C4/3C4/5C4 | E | 1598 | BTS | M | - | | 11/06 ▸ 11/09 | 6E0959455A | | |
| 1.6 i | 6L2/2C4/3C4/5C4 | E | 1598 | BTS | M | - | | 11/06 ▸ 11/09 | 6X0959455C | **696078** | |
| 1.6 i | 6L2/2C4/3C4/5C4 | E | 1598 | BTS | M | - | | 11/06 ▸ 11/09 | 6Q0959455AF | **696019** | |
| 2.0 i | 6L2/2L4/2T4/3L4/3T4/5L4/5T4 | E | 1984 | AZL,BBX | M | +/- | | 09/02 ▸ 11/09 | 6X0959455C | **696078** | |
| 2.0 i | 6L2/2T4/3T4/5T4 | E | 1984 | AZL | M | - | | 09/02 ▸ 11/06 | 6E0959455A | | |
| 1.4 TDi | 6L2/274/374/574 | D | 1422 | BMS | M | +/- | C | 06/06 ▸ 11/09 | 6Q0959455AD | | |
| 1.4 TDi | 6L2/254/354/554 | D | 1422 | BNM | M | - | | 05/05 ▸ 11/09 | 6Q0959455AD | | |
| 1.9 TDi | 6L2/224/284/324/384 524/584 | D | 1896 | ATD,AXR,BMT | M | +/- | C | 09/02 ▸ 11/09 | 6Q0959455AD | | |
| 1.9 TDi | 6L2/336/536 | D | 1896 | ASZ,BLT | M | +/- | Right/Droite | 10/02 ▸ 05/06 | 6X0959455C | **696078** | |
| 1.9 SDi | 6L2/214/314 | D | 1896 | ASY | M | + | | 05/04 ▸ 12/05 | 6Q0959455AD | | |
| ▸ 6L-5-008 001 | | | | | | | | | | | |
| 1.9 SDi | 6L2/214/314 | D | 1896 | ASY | M | - | | 09/02 ▸ 12/05 | 6E0959455A | | |
| 1.9 SDi | 6L2/214/314 | D | 1896 | ASY | M | - | | 09/02 ▸ 12/05 | 6Q0959455AF | **696019** | |
| 1.9 TDi | 6L2536 | D | 1896 | ASZ | M | - | | 10/02 ▸ 09/05 | 6X0959455C | **696078** | |
| 1.9 SDi | 6L2/214/314 | D | 1896 | ASY | M | + | | 09/02 ▸ 05/04 | 6X0959455C | **696078** | |
| ▸ -6L-5-008 00 | | | | | | | | | | | |
| 1.9 SDi | 6L2/214/314 | D | 1896 | ASY | M | | | 09/02 ▸ 05/04 | 6Q0959455J | | |

## IBIZA (93>99)

| | | | | | | | | | | | |
|---|---|---|---|---|---|---|---|---|---|---|---|
| 1.0 i | 6K1/161/261/361 | E | 999 | AER | M | - | Left/gauche | 09/96 ▸ 06/99 | 165959455T | **698368** | |
| 1.0 i | 6K1/161/261/361 | E | 999 | AER | M | - | Left/gauche | 09/96 ▸ 06/99 | 165959455L | **696031** | |
| 1.05,1.05 i | 6K1/1B1/1B2/1B3/2B3 3B3 | E | 1043 | AAU | M | - | Left/gauche | 02/93 ▸ 06/96 | 165959455L | **696031** | |
| 1.05,1.05 i | 6K1/1B1/1B2/1B3/2B3 3B3 | E | 1043 | AAU | M | - | Left/gauche | 02/93 ▸ 06/96 | 165959455T | **698368** | |
| 1.3 i | 6K1/1C1/1C2/1L1/1L2/2C1/2C2/2L2/3C1/3C2/3L2 | E | 1272 | 2G,AAV | M | - | Left/gauche | 02/93 ▸ 07/94 | 165959455T | **698368** | |
| 1.4 i,1.4 i 16V | 6K1/1A3/1U2/1U3/1V2 271/2A3/2U2/2U3/2V2/371/3A3/3U2/3U3/3V2/571 | E | 1390 | AEX,AFH,AKV,ANX,APQ | M | + | Left/gauche | 01/97 ▸ 06/99 | 6K0959455A | **698357** | |
| 1.4 i,1.4 i 16V | 6K1/1U2/1U3/1V2/271 2A3/2U2/2U3/2V2/371/3A3/3U2/3U3/3V2/571 | E | 1390 | AEX,AFH,AKV,ANX,APQ | M | + | Right/Droite | 01/97 ▸ 06/99 | 6K0959455B | **698358** | |
| 1.4 i,1.4 i 16V | 6K1/1A3/1U2/1U3/1V2 271/2A3/2U2/2U3/2V2/371/3A3/3U2/3U3/3V2/571 | E | 1390 | AEX,AFH,AKV,ANX,APQ | M | - | Left/gauche | 07/95 ▸ 06/99 | 165959455T | **698368** | |
| 1.4 i 16V | 6K1/271/371/571 | E | 1390 | AFH | M | - | Left/gauche | 06/97 ▸ 06/99 | 165959455L | **696031** | |

Fan Motor + Blades Moteur + hélice Lüftermotor + Lüfterrad Motorino + Ventola Ventilatormotor Fan motoru + Kanatlar
Moto-ventilador + Aspas Мотор вентилятора + лопасти вентилятора Ventilátor motor és lapát Motor sahary + vrtule Ventilator motor + Lame Μοτέρ ανεμιστήρων + Πτερωτές



• **New** Nouveau **Nuevo** Novo **Nuovo** Nieuw **Neu** Nowość **Yeni** Новый Νέο **Novy**

## IBIZA (93>99) (.../...)

| | | | | | | | | | | | |
|---|---|---|---|---|---|---|---|---|---|---|---|
| 1.4 i | 6K1/1J1/1J2/1P1/1P2/1R1/1R2/2J1/2J2/2P1/2P2 2R1/2R2/3J2/3P1/3P2/3R1/3R2 | E | 1391 | ABD | M | - | Left/gauche | 09/93 ▸ 06/96 | 165959455T | **698368** | |
| 1.6 i | 6K1/2D1/3D1 6K-V-110001 ▸ | E | 1595 | 1F | M | + | Left/gauche | 02/97 ▸ 06/99 | 6K0959455A | **698357** | |
| 1.6 i | 6K1/2D1/3D1 6K-V-110001 ▸ | E | 1595 | 1F | M | + | Right/Droite | 02/97 ▸ 06/99 | 6K0959455B | **698358** | |
| 1.6 i | 6K1/1D1/2A1/2D1/3A1/3D1 | E | 1595 | 1F | M | - | Left/gauche | 05/94 ▸ 06/99 | 1H0959455D | **698367** | |
| 1.6 i | 6K1/2D4/3D4 | E | 1595 | 1F | A | + | Left/gauche | 05/97 ▸ 06/99 | 6K0959455A | **698357** | |
| 1.6 i | 6K1/2D4/3D4 | E | 1595 | 1F | A | + | Right/Droite | 05/97 ▸ 06/99 | 6K0959455B | **698358** | |
| 1.6 i | 6K1/2D4/3D4 | E | 1595 | 1F | A | - | Left/gauche | 05/97 ▸ 06/99 | 1H0959455D | **698367** | |
| 1.6 i | 6K1/251/2F1/2W1/351/3F1/3W1/3W2/5W1/5W2 | E | 1598 | AEE,AFT,ALM | M | + | Left/gauche | 02/97 ▸ 06/99 | 6K0959455A | **698357** | |
| 1.6 i | 6K1/251/2F1/2W1/351/3F1/3W1/3W2/5W1/5W2 | E | 1598 | AEE,AFT,ALM | M | + | Right/Droite | 02/97 ▸ 06/99 | 6K0959455B | **698358** | |
| 1.6 i | 6K1/251/351 6K-V-110001 ▸ | E | 1598 | AEE | M | + | Right/Droite | 09/97 ▸ 06/99 | 6K0959455D | **698359** | |
| 1.6 i | 6K1/251/2E1/2E2/2F1/351/3E1/3E2/3F1 | E | 1598 | ABU,AEE,ALM | M | - | Left/gauche | 02/93 ▸ 06/99 | 165959455T | **698368** | |
| 1.6 i | 6K1/2W1/2W2/3W1/3W2/5W1/5W2 | E | 1598 | AFT | M | - | Left/gauche | 12/95 ▸ 06/99 | 1H0959455D | **698367** | |
| 1.6 i | 6K1/251/2F1/351/3F1 | E | 1598 | AEE,ALM | M | - | Left/gauche | 09/97 ▸ 06/99 | 165959455L | **696031** | |
| 1.8 i | 6K1/2M1/2T1/3M1 6K-V-110001 ▸ | E | 1781 | ACC,ADZ | M | + | Left/gauche | 02/97 ▸ 06/99 | 6K0959455A | **698357** | |
| 1.8 i | 6K1/2M1/2T1/3M1 6K-V-110001 ▸ | E | 1781 | ACC,ADZ | M | + | Right/Droite | 02/97 ▸ 06/99 | 6K0959455B | **698358** | |
| 1.8 i | 6K1/2M1/3M1 6K-V-110001 ▸ | E | 1781 | ADZ | M | + | Left/gauche | 02/97 ▸ 06/99 | 6K0959455C | **698360** | |
| 1.8 i,1.8 i 16V | 6K1/2C1/2C3/2F1/2M1 2T1/3C1/3C3/3F1/3M1/6G1/7G1 | E | 1781 | ABS,ACC,ADL,ADZ | M | - | Left/gauche | 02/93 ▸ 06/99 | 1H0959455D | **698367** | |
| 1.8 i | 6K1/2C2/2M2/3C2/3M2 6K-V-110001 ▸ | E | 1781 | ADZ | A | + | Right/Droite | 01/97 ▸ 06/99 | 6K0959455D | **698359** | |
| 1.8 i | 6K1/2C2/2M2/3C2/3M2 6K-V-110001 ▸ | E | 1781 | ADZ | A | + | Left/gauche | 02/97 ▸ 06/99 | 6K0959455C | **698360** | |
| 1.8 i | 6K1/2C2/2M2/3C2/3M2 6K-V-110001 ▸ | E | 1781 | ADZ | A | + | Left/gauche | 02/97 ▸ 06/99 | 6K0959455A | **698357** | |
| 1.8 i | 6K1/2C2/2M2/3C2/3M2 6K-V-110001 ▸ | E | 1781 | ADZ | A | + | Right/Droite | 02/97 ▸ 06/99 | 6K0959455B | **698358** | |
| 1.8 i | 6K1/2C2/2F2/2M2/3C2/3F2/3F3/3M2 | E | 1781 | ABS,ADZ | A | - | Left/gauche | 02/93 ▸ 06/99 | 1H0959455D | **698367** | |
| 2.0 i,2.0 i 16V | 6K1/5L1/611 6K-V-110001 ▸ | E | 1984 | ABF,AGG | M | + | Right/Droite | 01/97 ▸ 06/99 | 6K0959455D | **698359** | |
| 2.0 i | 6K15L1 6K-V-110001 ▸ | E | 1984 | AGG | M | + | Left/gauche | 02/97 ▸ 06/99 | 6K0959455A | **698357** | |
| 2.0 i | 6K15L1 6K-V-110001 ▸ | E | 1984 | AGG | M | + | Left/gauche | 02/97 ▸ 06/99 | 6K0959455C | **698360** | |
| 2.0 i | 6K15L1 6K-V-110001 ▸ | E | 1984 | AGG | M | + | Right/Droite | 02/97 ▸ 06/99 | 6K0959455B | **698358** | |
| 2.0 i | 6K1/3H1/5H1/5L1/7H1 | E | 1984 | 2E,AGG | M | - | Left/gauche | 02/93 ▸ 06/99 | 1H0959455D | **698367** | |
| 1.9 D,1.9 TD | 6K1/1Y2/2Y2/3E1/3Y2 5E1 6K-V-110001 ▸ | D | 1896 | 1Y,AAZ | M | +/- | Left/gauche | 02/97 ▸ 06/99 | 6K0959455A | **698357** | |
| 1.9 SDi | 6K1/1Z2/2Z2/3Z2 6K-V-110001 ▸ | D | 1896 | AEY | M | + | Left/gauche | 02/97 ▸ 06/99 | 6K0959455C | **698360** | |
| 1.9 SDi | 6K1/1Z2/2Z2/3Z2 6K-V-110001 ▸ | D | 1896 | AEY | M | + | Right/Droite | 02/97 ▸ 06/99 | 6K0959455B | **698358** | |
| 1.9 SDi | 6K1/1Z2/2Z2/3Z2 6K-V-110001 ▸ | D | 1896 | AEY | M | + | Left/gauche | 02/97 ▸ 06/99 | 6K0959455A | **698357** | |
| 1.9 D,1.9 TD | 6K1/1Y2/2Y2/3Y2/5E1 6K-V-110001 ▸ | D | 1896 | 1Y,AAZ | M | + | Right/Droite | 02/97 ▸ 06/99 | 6K0959455D | **698359** | |
| 1.9 SDi | 6K1/1Z2/2Z2/3Z2 | D | 1896 | AEY | M | - | Left/gauche | 09/95 ▸ 06/99 | 165959455T | **698368** | |
| 1.9 SDI | 6K1/1Z2/2Z2/3Z2 | D | 1896 | AEY | M | - | Left/gauche | 09/95 ▸ 06/99 | 165959455L | **696031** | |
| 1.9 TD | 6K1/3E1/5E1 6K-V-110001 ▸ | D | 1896 | AAZ | M | - | Left/gauche | 02/97 ▸ 06/99 | 6K0959455C | **698360** | |
| 1.9 D,1.9 TD | 6K1/1Y2/2Y2/3E1/3Y2 5E1 6K-V-110001 ▸ | D | 1896 | 1Y,AAZ | M | - | Right/Droite | 02/97 ▸ 06/99 | 6K0959455B | **698358** | |
| 1.9 TD | 6K13E1 | D | 1896 | AAZ | M | - | Right/Droite | 02/97 ▸ 06/99 | 6K0959455D | **698359** | |

## IBIZA (99>2001)

| | | | | | | | | | | | |
|---|---|---|---|---|---|---|---|---|---|---|---|
| 1.0 i | 6K1/1A6/1B6/1V6/2A6/2B6/2V6/3A6/3B6/3V6 | E | 999 | ALD,ANV,AUC | M | + | | 08/99 ▸ 11/01 | 6K0959455AA | **698528** | |
| 1.0 i | 6K1/1A6/1B6/1V6/2A6/2B6/2V6/3A6/3B6/3V6 | E | 999 | ALD,ANV,AUC | M | + | | 08/99 ▸ 11/01 | 6K0959455D | **698359** | |
| 1.0 i 16V | 6K1/2Q6/2Y6/3Y6 | E | 999 | AST,AVZ | M | + | | 05/00 ▸ 11/01 | 6K0959455B | **698358** | |
| 1.4 i,1.4 i 16V | 6K1/1C6/1D6/1U6/2C6 2D6/2E6/2R6/2U6/3C6/3D6/3E6/3R6/3U6/5R6 | E | 1390 | AKK,ANW,APE,AQQ,AUA,AUB,AUD | M | + | | 08/99 ▸ 11/01 | 6K0959455B | **698358** | |
| 1.6 i | 6K1/2H6/2S6/2T6/3H6/3T6/5H6/5T6 | E | 1595 | AKL,APF,AUR | M | + | | 06/99 ▸ 11/01 | 6K0959455B | **698358** | |

# SEAT (.../...)

## IBIZA (99>2001) (.../...)

| Type | Type Ctr. | | CC | | | AC | | | OE | Valeo | |
|---|---|---|---|---|---|---|---|---|---|---|---|
| 1.6 i | 6K1/2H6/2S6/2T6/3H6/3T6/5H6/5T6 | E | 1595 | AKL,APF,AUR | M | - | | 06/99 ▸ 11/01 | 6K0959455AA | 698528 | |
| 1.6 i | 6K1/2H6/2S6/2T6/3H6/3T6/5H6/5T6 | E | 1595 | AKL,APF,AUR | M | - | | 06/99 ▸ 11/01 | 6K0959455D | 698359 | |
| 1.6 i | 6K1/2G8/2S7/3G8 | E | 1595 | AEH,AKL | A | + | | 01/00 ▸ 11/01 | 6K0959455B | 698358 | |
| 1.6 i | 6K1/2G8/2S7/3G8 | E | 1595 | AEH,AKL | A | - | | 01/00 ▸ 11/01 | 6K0959455D | 698359 | |
| 1.6 i | 6K1/2G8/2S7/3G8 | E | 1595 | AEH,AKL | A | - | | 01/00 ▸ 11/01 | 6K0959455AA | 698528 | |
| 1.6 i | 6K1/2F1/3F1 | E | 1598 | ALM | M | + | | 08/99 ▸ 11/01 | 6K0959455B | 698358 | |
| 1.8 i Turbo 20V | 6K1/5J6/6J6 | E | 1781 | AQX,AYP | M | + | | 12/99 ▸ 11/01 | 6K0959455D | 698359 | |
| 1.9 SDi,1.9 TDi | 6K1/1K6/1M6/2K6/2L6 2M6/2N6/3K6/3L6/3M6/3N6/3X6/5L6/5N6/5X6 | D | 1896 | AGP,AGR,ALH,AQM,ASV | M | + | | 03/99 ▸ 11/01 | 6K0959455B | 698358 | |
| 1.9 TDi | 6K15X6 | D | 1896 | ASV | M | + | | 03/99 ▸ 11/01 | 6K0959455D | 698359 | |
| 1.9 SDi,1.9 TDi | 6K1/1K6/1M6/2K6/2L6 2M6/2N6/3K6/3L6/3M6/3N6/3X6/5L6/5N6/5X6 | D | 1896 | AGP,AGR,ALH,AQM,ASV | M | - | | 03/99 ▸ 11/01 | 6K0959455AA | 698528 | |
| 1.9 SDi,1.9 TDi | 6K1/1K6/1M6/2K6/2L6 2M6/2N6/3K6/3L6/3M6/3N6/3X6/5L6/5N6 | D | 1896 | AGP,AGR,ALH,AQM,ASV | M | - | | 03/99 ▸ 11/01 | 6K0959455D | 698359 | |

## IBIZA (2001>)

| Type | Type Ctr. | | CC | | | AC | | | OE | Valeo | |
|---|---|---|---|---|---|---|---|---|---|---|---|
| 1.2 i 12V | 6L1/1D4/2D4/3D4 | E | 1198 | AZQ | M | +/- | | 11/01 ▸ 04/04 | 6X0959455C | 696078 | |
| 1.2 i 12V | 6L1/1D4/2D4/3D4 | E | 1198 | AZQ | M | + | | 11/01 ▸ 04/04 | 6Q0959455J | | |
| 1.2 i 12V | 6L1/1D4/2D4/3D4 6L-5-008 001 ▸ | E | 1198 | BME | M | + | | 11/04 ▸ 06/06 | 6Q0959455AD | | |
| 1.2 i 12V | 6L1/1D4/2D4/3D4 | E | 1198 | AZQ | M | - | | 11/01 ▸ 04/04 | 6Q0959455AF | 696019 | |
| 1.2 i 12V | 6L1/1D4/2D4/3D4 | E | 1198 | BME | M | | | 11/04 ▸ 06/06 | 6X0959455C | 696078 | |
| 1.2 i 12V | 6L1/1D4/2D4/3D4 | E | 1198 | BME | M | | | 11/04 ▸ 06/06 | 6Q0959455AF | 696019 | |
| 1.4 i 16V | 6L1/2G4/2H4/3G4/3H4 5G4/5H4 | E | 1390 | AUB,BBY,BBZ | M | +/- | | 09/01 ▸ 11/09 | 6X0959455C | 696078 | |
| 1.4 i 16V | 6L1/2G4/3G4 | E | 1390 | BBY | M | +/- | | 01/02 ▸ | 6X0959455A | 696042 | |
| 1.4 i 16V | 6L1/2G4/3G4 | E | 1390 | BBY | M | +/- | | 01/02 ▸ 04/04 | 6X0959455F | 696042 | |
| 1.4 i 16V | 6L1/2G4/2H4/3G4/3H4 5G4/5H4 | E | 1390 | AUB,BBY,BBZ | M | + | | 09/01 ▸ 11/09 | 6Q0959455J | | |
| 1.4 i 16V | 6L1/2G4/3G4 | E | 1390 | BBY | M | + | | 01/02 ▸ 04/04 | 1J0959455M | 698373 | |
| 1.4 i 16V | 6L1/2H4/3H4/5H4 | E | 1390 | BBZ | M | + | | 04/02 ▸ 11/09 | 6X0959455C | 696078 | |
| 1.4 i 16V | 6L1/2E4/2G4/3E4/3G4 5E4/5G4 | E | 1390 | BKY,BXW | M | + | | 05/04 ▸ 11/09 | 6Q0959455AD | | |
| 1.4 i 16V | 6L1/2E4/2G4/2H4/3E4 3G4/3H4/5E4/5G4/5H4 | E | 1390 | AUB,BBY,BBZ,BKY,BXW | M | - | | 09/01 ▸ 11/09 | 6Q0959455AF | 696019 | |
| 1.4 i 16V | 6L1/2G4/2H4/3G4/3H4 5G4/5H4 | E | 1390 | AUB,BBY,BKY | M | - | | 09/01 ▸ 12/07 | 6E0959455A | | |
| 1.4 i 16V | 6L1/2E4/3E4/5E4 | E | 1390 | BXW | M | - | | 05/06 ▸ 11/09 | 6X0959455C | 696078 | |
| 1.4 i 16V | 6L1/2G3/3G3 | E | 1390 | BBY | A | +/- | | 06/02 ▸ | 6X0959455A | 696042 | |
| 1.4 i 16V | 6L1/2G3/3G3 | E | 1390 | BBY | A | +/- | | 06/02 ▸ 04/04 | 6X0959455C | 696078 | |
| 1.4 i 16V | 6L1/2G3/3G3 | E | 1390 | BBY | A | +/- | | 06/02 ▸ 04/04 | 6X0959455F | 696042 | |
| 1.4 i 16V | 6L1/2G3/3G3 | E | 1390 | BBY | A | + | | 06/02 ▸ 04/04 | 1J0959455M | 698373 | |
| 1.4 i 16V | 6L1/2G3/3G3 | E | 1390 | BBY | A | + | | 06/02 ▸ 04/04 | 6Q0959455J | | |
| 1.4 i 16V | 6L1/2G3/3G3 | E | 1390 | BKY | A | + | | 05/04 ▸ 12/07 | 6Q0959455AD | | |
| 1.4 i 16V | 6L1/2G3/3G3 | E | 1390 | BBY,BKY | A | - | | 06/02 ▸ 12/07 | 6E0959455A | | |
| 1.4 i 16V | 6L1/2G3/3G3 | E | 1390 | BBY,BKY | A | - | | 06/02 ▸ 12/07 | 6Q0959455AF | 696019 | |
| 1.6 i | 6L15K4 | E | 1598 | BAH | M | +/- | | 01/07 ▸ 11/09 | 6Q0959455J | | |
| 1.6 i | 6L1/2K4/3K4 | E | 1598 | BAH | M | + | | 04/03 ▸ 04/04 | 6Q0959455J | | |
| 1.6 i | 6L1/2C4/3C4/5C4 | E | 1598 | BTS | M | + | | 11/06 ▸ 11/09 | 6Q0959455AD | | |
| 1.6 i | 6L1/2C4/3C4/5C4 | E | 1598 | BTS | M | - | | 11/06 ▸ 11/09 | 6Q0959455AF | 696019 | |
| 1.6 i | 6L1/2C4/3C4/5C4 | E | 1598 | BTS | M | - | | 11/06 ▸ 11/09 | 6X0959455C | 696078 | |
| 1.6 i | 6L1/2C7/3C7 | E | 1598 | BTS | A | + | | 11/07 ▸ 11/09 | 6Q0959455AD | | |
| 1.6 i | 6L1/2C7/3C7 | E | 1598 | BTS | A | - | | 11/07 ▸ 11/09 | 6Q0959455AF | 696019 | |
| 1.6 i | 6L1/2C7/3C7 | E | 1598 | BTS | A | - | | 11/07 ▸ 11/09 | 6X0959455C | 696078 | |
| 1.8 i Turbo 20V | 6L17J4 | E | 1781 | BKV | M | +/- | | 05/05 ▸ 05/08 | 6X0959455C | 696078 | |
| 1.8 i Turbo 20V | 6L1/6P4/7J4 | E | 1781 | BBU,BJX | M | + | | 12/03 ▸ 05/08 | 6X0959455C | 696078 | |
| 1.8 i Turbo 20V | 6L1/6P4/7J4 | E | 1781 | BBU,BJX | M | - | | 12/03 ▸ 05/08 | 1J0959455M | 698373 | |
| 2.0 i | 6L1/214/2T4/314/3L4/3T4/5T4 | E | 1984 | AZL,BBX | M | +/- | | 07/02 ▸ 06/07 | 6X0959455C | 696078 | |
| 2.0 i | 6L13L4 | E | 1984 | BBX | M | +/- | | 04/03 ▸ 05/04 | 1J0959455M | 698373 | |
| 2.0 i | 6L1/2L4/3L4/5L4 | E | 1984 | BBX | M | + | | 04/03 ▸ 06/07 | 6X0959455C | 696078 | |
| 2.0 i | 6L1/2T4/3T4/5T4 | E | 1984 | AZL | M | - | | 07/02 ▸ 06/05 | 6E0959455A | | |
| 2.0 i | 6L1/2L4/5L4 | E | 1984 | BBX | M | - | | 04/03 ▸ 06/07 | 1J0959455M | 698373 | |
| 2.0 i | 6L1/2T4/3T4 | E | 1984 | AZL | M | | | 05/04 ▸ 06/05 | 6E0959455A | | |
| 1.4 TDi | 6L1/274/374 | D | 1422 | BMS | M | +/- | | 06/06 ▸ 11/09 | 6Q0959455AD | | |
| 1.9 TDi | 6L1/224/324/336/524 736 | D | 1896 | ASZ,ATD,BLT | M | +/- | | 09/01 ▸ 11/09 | 1J0959455M | 698373 | |
| 1.9 SDi,1.9 TDi | 6L1/114/214/314/336 736 | D | 1896 | ASY,ASZ,BLT | M | +/- | | 01/02 ▸ 11/09 | 6X0959455C | 696078 | |
| 1.9 SDi | 6L1/114/214/314 | D | 1896 | ASY | M | + | | 01/02 ▸ 11/04 | 6Q0959455J | | |

Fan Motor + Blades Moteur + hélice Lüftermotor + Lüfterrad Motorino + Ventola Ventilatormotor Fan motoru + Kanatlar
Moto-ventilador + Aspas Мотор вентилятора + лопасти вентилятора Ventilátor motor és lapát Motor sahary + vrtule Ventilator motor + Lame Μοτέρ ανεμιστήρων + Πτερωτές



• **New** Nouveau **Nuevo** Novo **Nuovo** Nieuw **Neu** Nowość **Yeni** Новый Νέο **Novy**

| | | | CC | | | AC | | | OE | Valeo | |
|---|---|---|---|---|---|---|---|---|---|---|---|
| **IBIZA (2001>) (.../...)** | | | | | | | | | | | |
| 1.9 SDi,1.9 TDi | 6L1/114/224/314/324 524 | D | 1896 | ASY,ATD | M | + | | 10/04 ▸ | 6Q0959455AD | | |
| 6L-5-008 001 ▸ | | | | | | | | | | | |
| 1.9 TDi | 6L1/336/536/646 | D | 1896 | ASZ,BPX | M | - | | 11/01 ▸ 11/05 | 1J0959455M | **698373** | |
| 1.9 TDi | 6L1/224/324/336/524 536/646/736 | D | 1896 | ASZ,ATD,BPX | M | - | | 11/01 ▸ 11/05 | 6X0959455C | **696078** | |
| 1.9 SDi | 6L1/114/214/314 | D | 1896 | ASY | M | - | | 01/02 ▸ 12/05 | 6Q0959455AF | **696019** | |
| 1.9 SDi | 6L1/114/214/314 | D | 1896 | ASY | M | - | | 01/02 ▸ 12/05 | 6E0959455A | | |
| 1.9 TDi | 6L1/224/324/524 | D | 1896 | ATD | M | + | | 09/01 ▸ 05/04 | 6X0959455C | **696078** | |
| **IBIZA VI (2008>)** | | | | | | | | | | | |
| 1.2 i 12V | 6J1/2C4/3C4/5C4, 6J5 2C4/3C4 | E | 1198 | BZG | M | - | | 03/08 ▸ 05/10 | 6Q0959455AF | **696019** | |
| 1.4 i 16V | 6J1/2E4/3E4/5E4, 6J5 2E4/3E4/5E4 | E | 1390 | BXW | M | +/- | | 03/08 ▸ | 6Q0959455AD | | |
| 1.6 i 16V | 6J1/2G4/3G4/5G4, 6J5 2G4/3G4/5G4 | E | 1598 | BTS | M | +/- | | 05/08 ▸ | 6Q0959455AD | | |
| 1.6 i 16V | 6J1/3G7/5G7, 6J5/2G7 3G7/5G7 | E | 1598 | BTS | A | +/- | | 05/08 ▸ | 6Q0959455AD | | |
| 2.0 i | 6J5/2L4/3L4/5L4 | E | 1984 | CEKA | M | +/- | | 11/08 ▸ | 6Q0959455AD | | |
| 1.4 TDI | 6J1/254/354/554, 6J5 254/354/554 | D | 1422 | BMS/F | M | +/- | | 07/08 ▸ 06/10 | 6Q0959455AD | | |
| 1.9 TDI | 6J1/274/294/374/394 574/594, 6J5/274/294/374/394/574/594 | D | 1896 | BLS/F | M | +/- | | 03/08 ▸ | 6Q0959455AD | | |
| 1.9 TDI | 6J1/264/364/564, 6J5 264/364/564 | D | 1896 | BXJ/F | M | | | 07/08 ▸ 06/10 | 6Q0959455AD | | |
| **LEON I (99>2006)** | | | | | | | | | | | |
| 1.4 i 16V | 1M1/2C4/3C4/5C4/8C4 | E | 1390 | AXP | M | +/- | | 06/00 ▸ 02/02 | 6X0959455F | **696042** | |
| 1.4 i 16V | 1M1/2D4/3D4/5D4/8D4 | E | 1390 | AHW | M | + | | 01/00 ▸ | 6X0959455A | **696042** | |
| 1.4 i 16V | 1M1/2C4/2D4/3C4/5C4 5D4/8C4/8D4 | E | 1390 | AHW,BCA | M | + | | 01/00 ▸ 10/05 | 6X0959455F | **696042** | |
| 1.4 i 16V | 1M1/2C4/2D4/3C4/3D4 5C4/5D4/8C4/8D4 | E | 1390 | AHW,APE,BCA | M | - | | 11/99 ▸ 10/05 | 6E0959455A | | |
| 1.4 i 16V | 1M1/2D4/3D4/5D4/8D4 | E | 1390 | AHW | M | - | | 01/00 ▸ | 6X0959455A | **696042** | |
| 1.4 i 16V | 1M13D4 | E | 1390 | AHW | M | - | | 01/00 ▸ 02/02 | 6X0959455F | **696042** | |
| 1.6 i,1.6 i 16V | 1M1/3A4/3KC/5KC/8KC | E | 1595 | AUS,AZD,BCB,BFQ | M | +/- | | 06/00 ▸ 05/06 | 6X0959455F | **696042** | |
| 1.6 i | 1M1/3J4/5J4/8J4 | E | 1595 | AKL | M | + | | 11/99 ▸ | 6X0959455A | **696042** | |
| 1.6 i | 1M1/3J4/5J4/8J4 | E | 1595 | AKL | M | + | | 11/99 ▸ 10/05 | 6X0959455F | **696042** | |
| 1.6 i | 1M1/3J4/5J4/8J4 | E | 1595 | AKL | M | | | 11/99 ▸ 04/01 | 6E0959455A | | |
| 1.6 i | 1M1/3H3/5H3/8H3 | E | 1595 | AEH | A | +/- | | 08/99 ▸ | 6X0959455A | **696042** | |
| 1.6 i | 1M1/3H3/5H3/8H3 | E | 1595 | AEH | A | +/- | | 08/99 ▸ 02/00 | 6X0959455F | **696042** | |
| 1.6 i | 1M1/5H3/8H3 | E | 1595 | AEH | A | - | | 02/00 ▸ 04/04 | 6X0959455F | **696042** | |
| 1.6 i | 1M1/5H3/8H3 | E | 1595 | AEH | A | - | | 05/01 ▸ | 6X0959455A | **696042** | |
| 1.6 i | 1M1/3H3/5H3/8H3 | E | 1595 | AEH | A | | | 08/99 ▸ 04/01 | 6E0959455A | | |
| 1.8 i Turbo 20V | 1M1599 | E | 1781 | AJQ | M | +/- | | 03/00 ▸ 01/01 | 6X0959455A | **696042** | |
| 1.8 i 20V,1.8 i Turbo 20V | 1M1/3Q4/559/599/5Q4 759/8Q4 | E | 1781 | AJQ,APG,ARY | M | +/- | | 03/00 ▸ 10/05 | 6X0959455F | **696042** | |
| 1.8 i 20V | 1M1/5P4/8P4 | E | 1781 | AGN | M | + | | 11/99 ▸ | 6X0959455A | **696042** | |
| 1.8 i 20V | 1M1/5P4/8P4 | E | 1781 | AGN | M | + | | 11/99 ▸ 12/03 | 6X0959455F | **696042** | |
| 1.8 i 20V | 1M1/5P4/8P4 | E | 1781 | AGN | M | - | | 11/99 ▸ 04/01 | 6E0959455A | | |
| 1.8 i 20V | 1M18P4 | E | 1781 | AGN | M | - | | 09/00 ▸ 12/03 | 6X0959455F | **696042** | |
| 1.8 i 20V | 1M1/5P4/8P4 | E | 1781 | AGN | M | - | | 05/01 ▸ | 6X0959455A | **696042** | |
| 1.8 i Turbo 20V | 1M1536 | E | 1781 | APP | M | | | 08/99 ▸ 12/00 | 6E0959455A | | |
| 1.8 i 20V | 1M1/3Q3/5Q3/8Q3 | E | 1781 | APG | A | +/- | | 09/00 ▸ 10/05 | 6X0959455F | **696042** | |
| 1.9 SDi,1.9 TDi | 1M1/204/304/346/3B4 3V4/546/846/8B4 | D | 1896 | ALH,AQM,ASZ,AXR | M | +/- | | 05/00 ▸ 05/06 | 6X0959455F | **696042** | |
| 1.9 TDi | 1M1/344/374/574/844 874 | D | 1896 | AGR,AHF | M | + | | 11/99 ▸ 09/00 | 6X0959455F | **696042** | |
| 1.9 TDi | 1M1/344/374/574/844 874 | D | 1896 | AGR,AHF | M | + | | 11/99 ▸ | 6X0959455A | **696042** | |
| 1.9 TDi | 1M1/324/344/374/3B4 524/574/824/844/874/8B4 | D | 1896 | AGR,AHF,ALH,ASV | M | - | | 10/99 ▸ 05/06 | 6E0959455A | | |
| 1.9 TDi | 1M1/344/374/574/844 874 | D | 1896 | AGR,AHF | M | - | | 09/00 ▸ 09/02 | 6X0959455F | **696042** | |
| 1.9 TDi | 1M1/344/374/574/844 874 | D | 1896 | AGR,AHF | M | - | | 05/01 ▸ | 6X0959455A | **696042** | |
| **LEON II (2005>2010)** | | | | | | | | | | | |
| 1.4 TFSi 125 16V 1.4 i 86 16V | 1P1/1E2/1H1/2H1 | E | 1390 | BXW,CAXC | M | +/- | | 06/06 ▸ 05/10 | 1K0959455DG | | |

# SEAT (.../...)

## LEON II (2005>2010) (.../...)

| | | | CC | | | AC | | | OE | Valeo | |
|---|---|---|---|---|---|---|---|---|---|---|---|
| 1.4 TFSi 125 16V<br>1.4 i 86 16V | 1P1/1E2/1H1/2H1 | E | 1390 | BXW,CAXC | M | + | Left/gauche | 06/06 ▸ 05/10 | 1K0959455EA | | |
| 1.6 i 102 | 1P1/1D2/2D2 | E | 1595 | BSE,BSF,CCSA | M | +/- | Right/Droite | 07/05 ▸ 05/10 | 1K0959455DG | | |
| 1.6 i 102 | 1P1/1D2/2D2 | E | 1595 | BSE,BSF,CCSA | M | + | Left/gauche | 07/05 ▸ 05/10 | 1K0959455EA | | |
| 2.0 FSi 150 16V<br>2.0 TFSi 200 16V | 1P1/1M1/2M1/5P1 | E | 1984 | BLR,BLY,BWA | M | +/- | Left/gauche | 07/05 ▸ | 1K0959455N | | |
| 2.0 FSi 150 16V<br>2.0 TFSi 200 16V | 1P1/1M1/2M1/5P1 | E | 1984 | BLR,BLY,BWA | M | +/- | Right/Droite | 07/05 ▸ | 1K0959455Q | | |
| 2.0 FSi 150 16V<br>2.0 TFSi 16V<br>2.0 TFSi 185 16V<br>2.0 TFSi 200 16V<br>2.0 TFSi 241 16V | 1P1/1M1/2B1/2M1/2P1<br>591/5P1 | E | 1984 | BLR,BLY,BVY,BVZ,BWA,BWJ | M | +/- | | 07/05 ▸ | 1K0959455EA | | |
| 2.0 FSi 150 16V<br>2.0 TFSi 16V<br>2.0 TFSi 185 16V<br>2.0 TFSi 200 16V<br>2.0 TFSi 241 16V | 1P1/1M1/2B1/2M1/2P1<br>591/5P1 | E | 1984 | BLR,BLY,BVY,BVZ,BWA,BWJ | M | +/- | Right/Droite | 07/05 ▸ | 1K0959455DH | | |
| 2.0 FSi 150 16V<br>2.0 TFSi 16V<br>2.0 TFSi 185 16V<br>2.0 TFSi 200 16V<br>2.0 TFSi 241 16V | 1P1/1M1/2B1/2M1/2P1<br>591/5P1 | E | 1984 | BLR,BLY,BVY,BVZ,BWA,BWJ | M | +/- | Right/Droite | 07/05 ▸ | 1K0959455DG | | |
| 2.0 FSi 150 16V | 1P1/1M1/2M1 | E | 1984 | BLR,BLY | M | +/- | Left/gauche | 07/05 ▸ | 1K0959455P | | |
| 2.0 FSi 150 16V | 1P1/1M3/2M3 | E | 1984 | BLR,BLY | A | +/- | Left/gauche | 07/05 ▸ | 1K0959455P | | |
| 2.0 FSi 150 16V | 1P1/1M3/2M3 | E | 1984 | BLR,BLY | A | +/- | Right/Droite | 07/05 ▸ | 1K0959455Q | | |
| 2.0 FSi 150 16V<br>2.0 TFSi 16V<br>2.0 TFSi 200 16V | 1P1/1D2/1M3/2M3/5P3 | E | 1984 | BLR,BLY,BVY,BVZ,BWA | A | +/- | Right/Droite | 07/05 ▸ | 1K0959455DG | | |
| 2.0 FSi 150 16V<br>2.0 TFSi 16V<br>2.0 TFSi 200 16V | 1P1/1D2/1M3/2M3/5P3 | E | 1984 | BLR,BLY,BVY,BVZ,BWA | A | +/- | Right/Droite | 07/05 ▸ | 1K0959455DH | | |
| 2.0 FSi 150 16V<br>2.0 TFSi 16V<br>2.0 TFSi 200 16V | 1P1/1D2/1M3/2M3/5P3 | E | 1984 | BLR,BLY,BVY,BVZ,BWA | A | +/- | | 07/05 ▸ | 1K0959455EA | | |
| 2.0 FSi 150 16V | 1P1/1M3/2M3 | E | 1984 | BLR,BLY | A | +/- | Left/gauche | 07/05 ▸ | 1K0959455N | | |
| 1.9 TDi 105,1.9 TDi 90 | 1P1/112/122/1G2/212<br>222/2G2 | D | 1896 | BKC,BLS,BXE,BXF | M | +/- | Right/Droite | 07/05 ▸ 05/10 | 1K0959455DG | | |
| 1.9 TDi 105 | 1P1/112/122/212 | D | 1896 | BKC,BLS | M | +/- | Left/gauche | 07/05 ▸ | 1K0959455N | | |
| 1.9 TDi 105 | 1P1/112/122/212 | D | 1896 | BKC,BLS | M | +/- | Right/Droite | 07/05 ▸ | 1K0959455Q | | |
| 1.9 TDi 105 | 1P1/112/122/212 | D | 1896 | BKC,BLS | M | +/- | Right/Droite | 07/05 ▸ 05/06 | 1K0959455DH | | |
| 1.9 TDi 105,1.9 TDi 90 | 1P1/112/122/1G2/212<br>222/2G2 | D | 1896 | BKC,BLS,BXE,BXF | M | +/- | Left/gauche | 07/05 ▸ 05/10 | 1K0959455EA | | |
| 1.9 TDi 105 | 1P1122 | D | 1896 | BLS | M | +/- | Left/gauche | 11/05 ▸ | 1K0959455P | | |
| 1.9 TDi 105,1.9 TDi 90 | 1P1/112/1G2/212/222<br>2G2 | D | 1896 | BLS,BXE,BXF | M | + | Right/Droite | 11/05 ▸ 05/10 | 1K0959455DH | | |
| 2.0 TDi 136 16V<br>2.0 TDi 140<br>2.0 TDi 140 16V<br>2.0 TDi 170 16V | 1P1/131/171/231/241<br>271/561/5N1 | D | 1968 | AZV,BKD,BMM/F,BMN,CEGA/F | M | +/- | Left/gauche | 07/05 ▸ 05/10 | 1K0959455EA | | |
| 2.0 TDi 136 16V<br>2.0 TDi 140<br>2.0 TDi 140 16V | 1P1/131/171/231/241<br>271 | D | 1968 | AZV,BKD,BMM/F | M | +/- | Left/gauche | 07/05 ▸ | 1K0959455N | | |
| 2.0 TDi 136 16V<br>2.0 TDi 140<br>2.0 TDi 140 16V | 1P1/131/171/231/241<br>271 | D | 1968 | AZV,BKD,BMM/F | M | +/- | Left/gauche | 07/05 ▸ | 1K0959455P | | |
| 2.0 TDi 136 16V<br>2.0 TDi 140<br>2.0 TDi 140 16V | 1P1/131/171/231/241<br>271 | D | 1968 | AZV,BKD,BMM/F | M | +/- | Right/Droite | 07/05 ▸ | 1K0959455Q | | |
| 2.0 TDi 136 16V<br>2.0 TDi 140<br>2.0 TDi 140 16V<br>2.0 TDi 170 16V | 1P1/131/171/231/241<br>271/561/5N1 | D | 1968 | AZV,BKD,BMM/F,BMN,CEGA/F | M | +/- | Right/Droite | 07/05 ▸ 05/10 | 1K0959455DH | | |
| 2.0 TDi 136 16V<br>2.0 TDi 140<br>2.0 TDi 140 16V<br>2.0 TDi 170 16V | 1P1/131/171/231/241<br>271/561/5N1 | D | 1968 | AZV,BKD,BMM/F,BMN,CEGA/F | M | +/- | Right/Droite | 07/05 ▸ 05/10 | 1K0959455DG | | |
| 2.0 TDi 136 16V<br>2.0 TDi 140<br>2.0 TDi 140 16V | 1P1/133/173/233/243<br>273 | D | 1968 | AZV,BKD,BMM/F | A | +/- | Right/Droite | 07/05 ▸ | 1K0959455Q | | |

Fan Motor + Blades Moteur + hélice Lüftermotor + Lüfterrad Motorino + Ventola Ventilatormotor Fan motoru + Kanatlar
Moto-ventilador + Aspas Мотор вентилятора + лопасти вентилятора Ventilátor motor és lapát Motor sahary + vrtule Ventilator motor + Lame Μοτέρ ανεμιστήρων + Πτερωτές



• **New** Nouveau **Nuevo** Novo **Nuovo** Nieuw **Neu** Nowość **Yeni** Новый Νέο **Nový**

| Type Ctr. | | CC | | AC | | | | OE | Valeo | |
|---|---|---|---|---|---|---|---|---|---|---|
| **SEAT (.../...)** | | | | | | | | | | |
| **LEON II (2005>2010) (.../...)** | | | | | | | | | | |
| 2.0 TDi 136 16V<br>2.0 TDi 140<br>2.0 TDi 140 16V | 1P1/133/173/233/243<br>273 | D | 1968 | AZV,BKD,BMM/F | A | +/- | Left/gauche | 07/05 ▸ 05/10 | 1K0959455EA | |
| 2.0 TDi 136 16V<br>2.0 TDi 140<br>2.0 TDi 140 16V | 1P1/133/173/233/243<br>273 | D | 1968 | AZV,BKD,BMM/F | A | +/- | Right/Droite | 07/05 ▸ 05/10 | 1K0959455DG | |
| 2.0 TDi 136 16V<br>2.0 TDi 140<br>2.0 TDi 140 16V | 1P1/133/173/233/243<br>273 | D | 1968 | AZV,BKD,BMM/F | A | +/- | Left/gauche | 07/05 ▸ | 1K0959455P | |
| 2.0 TDi 136 16V<br>2.0 TDi 140<br>2.0 TDi 140 16V | 1P1/133/173/233/243<br>273 | D | 1968 | AZV,BKD,BMM/F | A | +/- | Left/gauche | 07/05 ▸ | 1K0959455N | |
| 2.0 TDi 136 16V<br>2.0 TDi 140<br>2.0 TDi 140 16V | 1P1/133/173/233/243<br>273 | D | 1968 | AZV,BKD,BMM/F | A | +/- | Right/Droite | 07/05 ▸ 05/10 | 1K0959455DH | |
| **TOLEDO (91>98)** | | | | | | | | | | |
| 1.6 i | 1L2/2B1/2Q1/2X1/3B1/3Q1/3X1/5X1/8B1/8Q1/8X1 | E | 1595 | 1F | M | + | | 02/91 ▸ 09/98 | 357959455F | **696039** |
| 1.6,1.6 i | 1L2/2A1/2B1/2Q1/2X1<br>3A1/3B1/3Q1/3X1/5X1/8A1/8B1/8Q1/8X1 | E | 1595 | 1F,ABN,EZ | M | - | Left/gauche | 02/91 ▸ 09/98 | 165959455T | **698368** |
| 1.8 i,1.8 i 16V | 1L2/2C1/2C2/2J1/2P1<br>3C1/3C2/3J1/3P1/3P2/5E1/5F1/8C1/8C2/8J1/8P1 | E | 1781 | ABS,ADZ,KR,PL,RP | M | + | | 02/91 ▸ 09/98 | 357959455F | **696039** |
| 1.8 i | 1L2/2C2/8C2 | E | 1781 | ADZ | M | - | | 07/94 ▸ 09/95 | 357959455F | **696039** |
| 2.0 i | 1L2/3D1/5D1/5K1 | E | 1984 | 2E | M | +/- | Left/gauche | 02/91 ▸ 09/95 | 357959455F | **696039** |
| 2.0 i,2.0 i 16V | 1L2/2K1/3K1/3T1/5M1<br>5M2/5T1/6M1/6M2/8D1/8K1/8T1 | E | 1984 | 2E,ABF,AGG | M | + | | 02/91 ▸ 09/98 | 357959455F | **696039** |
| 2.0 i | 1L2/3D2/5K2 | E | 1984 | 2E | A | +/- | Left/gauche | 02/91 ▸ 09/95 | 357959455F | **696039** |
| 2.0 i | 1L2/3T2/5D2/5T2/8D2/8T2 | E | 1984 | 2E,AGG | A | + | | 02/91 ▸ 09/98 | 357959455F | **696039** |
| 1.9 TDi | 1L2/3Z1/5Z1/8Z1 | D | 1896 | AFN | M | - | Left/gauche | 05/97 ▸ 09/98 | 165959455T | **698368** |
| **TOLEDO (98>2004)** | | | | | | | | | | |
| 1.4 i 16V | 1M2/2C4/3C4 | E | 1390 | AXP | M | +/- | | 06/00 ▸ 02/02 | 1J0959455M | **698373** |
| 1.4 i 16V | 1M2/2D4/3D4 | E | 1390 | AHW | M | + | | 01/00 ▸ 05/02 | 1J0959455M | **698373** |
| 1.4 i 16V | 1M2/2C4/3C4/3D4 | E | 1390 | AHW,AXP | M | + | | 01/00 ▸ 05/02 | 6X0959455A | **696042** |
| 1.4 i 16V | 1M2/2C4/3C4/3D4 | E | 1390 | AHW,AXP | M | + | | 01/00 ▸ 05/02 | 6X0959455F | **696042** |
| 1.4 i 16V | 1M2/2D4/3D4 | E | 1390 | AHW | M | - | | 01/00 ▸ 05/02 | 6X0959455A | **696042** |
| 1.4 i 16V | 1M2/2C4/2D4/3C4/3D4 | E | 1390 | AHW,AXP | M | - | | 01/00 ▸ 05/02 | 6E0959455A | |
| 1.4 i 16V | 1M22D4 | E | 1390 | AHW | M | - | | 01/00 ▸ 05/02 | 6X0959455F | **696042** |
| 1.6 i 16V | 1M2/2KC/8KC | E | 1595 | BCB | M | +/- | | 04/02 ▸ 07/04 | 6X0959455F | **696042** |
| 1.6 i,1.6 i 16V | 1M2/2J4/2KC/3J4/3KC<br>5J4/8J4/8KC | E | 1595 | AKL,AUS,AZD | M | + | | 10/98 ▸ 07/04 | 6X0959455F | **696042** |
| 1.6 i,1.6 i 16V | 1M2/2J4/2KC/3J4/3KC<br>5J4/5KC/8J4/8KC | E | 1595 | AKL,AUS,AZD | M | + | | 10/98 ▸ | 6X0959455A | **696042** |
| 1.6 i | 1M2/2J4/3J4/5J4/8J4 | E | 1595 | AKL | M | + | | 10/98 ▸ 07/04 | 1J0959455M | **698373** |
| 1.6 i,1.6 i 16V | 1M2/2J4/2KC/3J4/3KC<br>5J4/5KC/8J4/8KC | E | 1595 | AKL,AUS,AZD | M | - | | 10/98 ▸ | 6X0959455A | **696042** |
| 1.6 i,1.6 i 16V | 1M2/2KC/3J4/5J4/5KC<br>8J4/8KC | E | 1595 | AKL,AUS,AZD | M | - | | 10/98 ▸ 07/03 | 6X0959455F | **696042** |
| 1.6 i | 1M2/2J4/3J4/5J4/8J4 | E | 1595 | AKL | M | - | | 10/98 ▸ 07/04 | 6E0959455A | |
| 1.6 i | 1M2/3H3/5H3/8H3 | E | 1595 | AEH | A | + | | 11/98 ▸ | 6X0959455A | **696042** |
| 1.6 i | 1M2/3H3/5H3/8H3 | E | 1595 | AEH | A | + | | 11/98 ▸ 07/04 | 1J0959455M | **698373** |
| 1.6 i | 1M2/3H3/5H3 | E | 1595 | AEH | A | + | | 11/98 ▸ 07/04 | 6X0959455F | **696042** |
| 1.6 i | 1M2/3H3/5H3/8H3 | E | 1595 | AEH | A | - | | 11/98 ▸ 07/04 | 6E0959455A | |
| 1.6 i | 1M2/3H3/5H3/8H3 | E | 1595 | AEH | A | - | | 11/98 ▸ 07/04 | 6X0959455F | **696042** |
| 1.6 i | 1M2/3H3/5H3/8H3 | E | 1595 | AEH | A | - | | 11/98 ▸ | 6X0959455A | **696042** |
| 1.8 i 20V | 1M2/3P4/3Q4/536/836 | E | 1781 | AGN,APG,AUQ | M | +/- | | 05/01 ▸ 07/04 | 6X0959455F | **696042** |
| 1.8 i 20V | 1M2/5P4/8P4 | E | 1781 | AGN | M | + | | 10/98 ▸ 12/03 | 1J0959455M | **698373** |
| 1.8 i 20V | 1M2/5P4/5Q4/8Q4 | E | 1781 | AGN,APG | M | + | | 10/98 ▸ 07/04 | 6X0959455F | **696042** |
| 1.8 i 20V | 1M2/5P4/5Q4/8P4/8Q4 | E | 1781 | AGN,APG | M | + | | 10/98 ▸ | 6X0959455A | **696042** |
| 1.8 i 20V | 1M2/5P4/8P4 | E | 1781 | AGN | M | - | | 10/98 ▸ 12/03 | 6E0959455A | |
| 1.8 i 20V | 1M2/5P4/5Q4/8P4/8Q4 | E | 1781 | AGN,APG | M | - | | 10/98 ▸ | 6X0959455A | **696042** |
| 1.8 i 20V | 1M2/5P4/5Q4/8P4/8Q4 | E | 1781 | AGN,APG | M | - | | 10/98 ▸ 07/04 | 6X0959455F | **696042** |
| 1.8 i 20V | 1M2/5Q4/8Q4 | E | 1781 | APG | M | - | | 06/00 ▸ 07/04 | 1J0959455M | **698373** |
| 1.8 i 20V | 1M23N3 | E | 1781 | AGN | A | +/- | | 05/02 ▸ 12/03 | 6X0959455F | **696042** |
| 1.8 i 20V | 1M2/5N3/8N3 | E | 1781 | AGN | A | + | | 11/98 ▸ 12/03 | 1J0959455M | **698373** |
| 1.8 i 20V | 1M2/3Q3/5N3/5Q3/8N3<br>8Q3 | E | 1781 | AGN,APG | A | + | | 11/98 ▸ | 6X0959455A | **696042** |
| 1.8 i 20V | 1M2/5N3/5Q3/8N3 | E | 1781 | AGN,APG | A | + | | 11/98 ▸ 05/02 | 6X0959455F | **696042** |
| 1.8 i 20V | 1M2/3Q3/5N3/8N3/8Q3 | E | 1781 | AGN,APG | A | - | | 11/98 ▸ 07/04 | 6X0959455F | **696042** |
| 1.8 i 20V | 1M2/5N3/8N3 | E | 1781 | AGN | A | - | | 11/98 ▸ 12/03 | 6E0959455A | |

# SEAT (.../...)

## TOLEDO (98>2004) (.../...)

| | | | CC | | | AC | | | OE | Valeo |
|---|---|---|---|---|---|---|---|---|---|---|
| 1.8 i 20V | 1M2/3Q3/5N3/5Q3/8N3 8Q3 | E | 1781 | AGN,APG | A | - | | 11/98 ▸ | 6X0959455A | **696042** |
| 1.8 i 20V | 1M2/3Q3/5Q3/8Q3 | E | 1781 | APG | A | - | | 09/00 ▸ 07/04 | 1J0959455M | **698373** |
| 2.3 i VR5 20V | 1M2/5T4/6T4 | E | 2324 | AGZ | M | + | | 10/98 ▸ 11/00 | 6X0959455A | **696042** |
| 2.3 i VR5 20V | 1M2/5T4/5U4/6T4/6U4 | E | 2324 | AGZ,AQN | M | + | | 10/98 ▸ 11/03 | 1J0959455M | **698373** |
| 2.3 i VR5 20V | 1M2/5T4/5U4/6T4/6U4 | E | 2324 | AGZ,AQN | M | - | | 10/98 ▸ 11/03 | 6X0959455F | **696042** |
| 2.3 i VR5 20V | 1M2/5T4/5U4/6T4/6U4 | E | 2324 | AGZ,AQN | M | - | | 10/98 ▸ | 6X0959455A | **696042** |
| 1.9 SDi | 1M1/204/304 | D | 1896 | AQM | M | +/- | | 06/00 ▸ 04/01 | 6X0959455F | **696042** |
| 1.9 TDi | 1M2/224/244/274/2B4 324/344/374/3B4/524/574/824/844/846/874/8B4 | D | 1896 | AGR,AHF,ALH,ASV,ASZ | M | + | | 10/98 ▸ | 6X0959455A | **696042** |
| 1.9 TDi | 1M2/244/274/2B4/344 374/3B4/574/824/844/846/874/8B4 | D | 1896 | AGR,AHF,ALH,ASV,ASZ | M | + | | 10/98 ▸ 07/04 | 1J0959455M | **698373** |
| 1.9 TDi | 1M2/274/2B4/324/3B4 524/574/824/874/8B4 | D | 1896 | AHF,ALH,ASV | M | + | | 10/98 ▸ 07/04 | 6X0959455F | **696042** |
| 1.9 TDi | 1M2/244/274/2B4/344 374/3B4/574/844/846/874/8B4 | D | 1896 | AGR,AHF,ALH,ASZ | M | - | | 10/98 ▸ 07/04 | 6E0959455A | |
| 1.9 TDi | 1M2/224/244/274/2B4 324/344/374/3B4/524/574/824/844/846/874/8B4 | D | 1896 | AGR,AHF,ALH,ASV,ASZ | M | - | | 10/98 ▸ 07/04 | 6X0959455F | **696042** |
| 1.9 TDi | 1M2/224/244/274/2B4 324/344/374/3B4/524/574/824/844/846/874/8B4 | D | 1896 | AGR,AHF,ALH,ASV,ASZ | M | - | | 10/98 ▸ | 6X0959455A | **696042** |
| 1.9 TDi | 1M2/2B4/3B4/8B4 | D | 1896 | ALH | M | - | | 03/99 ▸ | 1J0959455F | |
| 1.9 TDi | 1M2/224/324/524/824 | D | 1896 | ASV | M | - | | 10/99 ▸ 07/04 | 1J0959455M | **698373** |
| 1.9 TDi | 1M22B4 | D | 1896 | ALH | M | | | 09/00 ▸ | 6X0959455A | **696042** |
| 1.9 TDi | 1M22B4 | D | 1896 | ALH | M | | | 09/00 ▸ | 1J0959455F | |

## TOLEDO (2004>)

| | | | | | | | | | | |
|---|---|---|---|---|---|---|---|---|---|---|
| 1.4 FSi,1.4 SRE | 5P2/0E2/1E2/1H1/2H1 | E | 1390 | BXW,CAXC | M | +/- | Right/Droite | 05/06 ▸ | 1K0959455DG | |
| 1.4 FSi,1.4 SRE | 5P2/0E2/1E2/1H1/2H1 | E | 1390 | BXW,CAXC | M | + | Left/gauche | 05/06 ▸ | 1K0959455P | |
| 1.4 FSi,1.4 SRE | 5P2/0E2/1E2/1H1/2H1 | E | 1390 | BXW,CAXC | M | + | Left/gauche | 05/06 ▸ | 1K0959455EA | |
| 1.6 i | 5P2/0D2/1D2/2D2 | E | 1595 | BSE,BSF | M | +/- | Right/Droite | 05/05 ▸ | 1K0959455DG | |
| 1.6 i | 5P2/0D2/1D2/2D2 | E | 1595 | BGU,BSE,BSF | M | + | Left/gauche | 09/04 ▸ | 1K0959455EA | |
| 1.6 i | 5P2/1D2/2D2 | E | 1595 | BGU | M | + | | 09/04 ▸ 05/05 | 1K0959455DG | |
| 1.6 i | 5P2/1D2/2D2 | E | 1595 | BGU | M | + | | 09/04 ▸ | 1K0959455R | |
| 1.6 i | 5P2/0D2/1D2/2D2 | E | 1595 | BGU,BSE,BSF | M | + | Left/gauche | 09/04 ▸ | 1K0959455P | |
| 2.0 FSi 16V,2.0 TFSi 16V | 5P2/1M1/2M1/2P1 | E | 1984 | BLR,BLY,BVY,BVZ,BWA | M | +/- | Left/gauche | 09/04 ▸ | 1K0959455P | |
| 2.0 FSi 16V,2.0 TFSi 16V | 5P2/1M1/2M1/2P1 | E | 1984 | BLR,BLY,BVY,BVZ,BWA | M | +/- | Left/gauche | 09/04 ▸ | 1K0959455EA | |
| 2.0 FSi 16V,2.0 TFSi 16V | 5P2/1M1/2M1/2P1 | E | 1984 | BLR,BLY,BVY,BVZ,BWA | M | +/- | Right/Droite | 09/04 ▸ | 1K0959455DG | |
| 2.0 FSi 16V,2.0 TFSi 16V | 5P2/1M1/2M1/2P1 | E | 1984 | BLR,BLY,BVY,BVZ,BWA | M | +/- | Left/gauche | 09/04 ▸ | 1K0959455N | |
| 2.0 FSi 16V | 5P22M1 | E | 1984 | BLR,BLY | M | + | | 09/04 ▸ 11/05 | 1K0959455DG | |
| 2.0 FSi 16V | 5P22M1 | E | 1984 | BLR,BLY | M | + | | 09/04 ▸ | 1K0959455R | |
| 2.0 FSi 16V | 5P22M1 | E | 1984 | BLR,BLY | M | + | | 09/04 ▸ | 1K0959455N | |
| 2.0 FSi 16V | 5P22M1 | E | 1984 | BLR,BLY | M | + | | 09/04 ▸ | 1K0959455P | |
| 2.0 FSi 16V | 5P22M1 | E | 1984 | BLR,BLY | M | + | | 09/04 ▸ 11/05 | 1K0959455EA | |
| 2.0 FSi 16V,2.0 TFSi 16V | 5P2/1M1/2M1/2P1 | E | 1984 | BLR,BLY,BVY,BVZ,BWA | M | + | | 09/04 ▸ | 1K0959455DH | |
| 2.0 FSi 16V | 5P22M1 | E | 1984 | BLR,BLY | M | + | | 09/04 ▸ | 1K0959455Q | |
| 2.0 FSi 16V,2.0 TFSi 16V | 5P2/1M3/2M3/2P3 | E | 1984 | BLR,BLY,BVY,BVZ,BWA | A | +/- | Right/Droite | 05/05 ▸ | 1K0959455DG | |
| 2.0 FSi 16V,2.0 TFSi 16V | 5P2/1M3/2M3/2P3 | E | 1984 | BLR,BLY,BVY,BVZ,BWA | A | +/- | Left/gauche | 05/05 ▸ | 1K0959455N | |
| 2.0 FSi 16V,2.0 TFSi 16V | 5P2/1M3/2M3/2P3 | E | 1984 | BLR,BLY,BVY,BVZ,BWA | A | +/- | Left/gauche | 05/05 ▸ | 1K0959455EA | |
| 2.0 FSi 16V,2.0 TFSi 16V | 5P2/1M3/2M3/2P3 | E | 1984 | BLR,BLY,BVY,BVZ,BWA | A | +/- | Left/gauche | 05/05 ▸ | 1K0959455P | |
| 2.0 FSi 16V | 5P22M3 | E | 1984 | BLR,BLY | A | + | | 09/04 ▸ | 1K0959455N | |
| 2.0 FSi 16V,2.0 TFSi 16V | 5P2/1M3/2M3/2P3 | E | 1984 | BLR,BLY,BVY,BVZ,BWA | A | + | | 09/04 ▸ | 1K0959455DH | |
| 2.0 FSi 16V | 5P22M3 | E | 1984 | BLR,BLY | A | + | | 09/04 ▸ | 1K0959455P | |
| 2.0 FSi 16V | 5P22M3 | E | 1984 | BLR,BLY | A | + | | 09/04 ▸ | 1K0959455Q | |
| 2.0 FSi 16V | 5P22M3 | E | 1984 | BLR,BLY | A | + | | 09/04 ▸ 11/05 | 1K0959455DG | |
| 2.0 FSi 16V | 5P22M3 | E | 1984 | BLR,BLY | A | + | | 09/04 ▸ | 1K0959455R | |
| 2.0 FSi 16V | 5P22M3 | E | 1984 | BLR,BLY | A | + | | 09/04 ▸ 11/05 | 1K0959455EA | |
| 1.9 TDi | 5P2/012/022/112/122 212/222 | D | 1896 | BLS,BXE | M | +/- | Left/gauche | 10/05 ▸ | 1K0959455P | |
| 1.9 TDi | 5P2/012/022/112/122 212/222 | D | 1896 | BLS,BXE | M | +/- | Right/Droite | 10/05 ▸ | 1K0959455DG | |
| 1.9 TDi | 5P2/012/022/112/122 212/222 | D | 1896 | BLS,BXE | M | +/- | Left/gauche | 10/05 ▸ | 1K0959455EA | |
| 1.9 TDi | 5P2/112/212 | D | 1896 | BJB,BKC | M | + | | 09/04 ▸ | 1K0959455P | |
| 1.9 TDi | 5P2/112/212 | D | 1896 | BJB,BKC | M | + | | 09/04 ▸ | 1K0959455N | |
| 1.9 TDi | 5P2/112/212 | D | 1896 | BJB,BKC | M | + | | 09/04 ▸ | 1K0959455R | |
| 1.9 TDi | 5P2/112/212 | D | 1896 | BJB,BKC | M | + | | 09/04 ▸ 02/06 | 1K0959455DG | |
| 1.9 TDi | 5P2/112/212 | D | 1896 | BJB,BKC | M | + | | 09/04 ▸ | 1K0959455Q | |
| 1.9 TDi | 5P2/012/022/112/122 212/222 | D | 1896 | BJB,BKC,BLS,BXE | M | + | | 09/04 ▸ | 1K0959455DH | |
| 1.9 TDi | 5P2/112/212 | D | 1896 | BJB,BKC | M | + | | 09/04 ▸ 02/06 | 1K0959455EA | |

Fan Motor + Blades Moteur + hélice Lüftermotor + Lüfterrad Motorino + Ventola Ventilatormotor Fan motoru + Kanatlar
Moto-ventilador + Aspas Мотор вентилятора + лопасти вентилятора Ventilátor motor és lapát Motor sahary + vrtule Ventilator motor + Lame Μοτέρ ανεμιστήρων + Πτερωτές



• **New** Nouveau **Nuevo** Novo **Nuovo** Nieuw **Neu** Nowość **Yeni** Новый Νέο **Novy**

## SEAT (.../...)

### TOLEDO (2004>) (.../...)

| | | CC | | | AC | | | OE | Valeo |
|---|---|---|---|---|---|---|---|---|---|
| 1.9 TDi | 5P2/023/123/223 | D | 1896 | BLS | A | +/- | Right/Droite | 06/07 ▸ | 1K0959455DG | |
| 1.9 TDi | 5P2/023/123/223 | D | 1896 | BLS | A | +/- | Left/gauche | 06/07 ▸ | 1K0959455EA | |
| 1.9 TDi | 5P2/023/123/223 | D | 1896 | BLS | A | +/- | Left/gauche | 06/07 ▸ | 1K0959455P | |
| 1.9 TDi | 5P2/023/123/223 | D | 1896 | BLS | A | + | | 06/07 ▸ | 1K0959455DH | |
| 2.0 TDi,2.0 TDi 16V<br>2.0 TDi PD 16V | 5P2/031/071/131/141<br>171/231/261/271 | D | 1968 | AZV,BKD,BMM/F,BMN | M | +/- | Left/gauche | 09/04 ▸ | 1K0959455P | |
| 2.0 TDi,2.0 TDi 16V<br>2.0 TDi PD 16V | 5P2/031/071/131/141<br>171/231/261/271 | D | 1968 | AZV,BKD,BMM/F,BMN | M | +/- | Right/Droite | 09/04 ▸ | 1K0959455DG | |
| 2.0 TDi,2.0 TDi 16V<br>2.0 TDi PD 16V | 5P2/031/071/131/141<br>171/231/261/271 | D | 1968 | AZV,BKD,BMM/F,BMN | M | +/- | Left/gauche | 09/04 ▸ | 1K0959455N | |
| 2.0 TDi,2.0 TDi 16V<br>2.0 TDi PD 16V | 5P2/031/071/131/141<br>171/231/261/271 | D | 1968 | AZV,BKD,BMM/F,BMN | M | +/- | Left/gauche | 09/04 ▸ | 1K0959455EA | |
| 2.0 TDi 16V | 5P2/231/241 | D | 1968 | AZV,BKD | M | + | | 09/04 ▸ | 1K0959455R | |
| 2.0 TDi 16V | 5P2/231/241 | D | 1968 | AZV,BKD | M | + | | 09/04 ▸ | 1K0959455DG | |
| 2.0 TDi 16V | 5P2/231/241 | D | 1968 | AZV,BKD | M | + | | 09/04 ▸ | 1K0959455EA | |
| 2.0 TDi 16V | 5P2/231/241 | D | 1968 | AZV,BKD | M | + | | 09/04 ▸ | 1K0959455N | |
| 2.0 TDi 16V | 5P2/231/241 | D | 1968 | AZV,BKD | M | + | | 09/04 ▸ | 1K0959455Q | |
| 2.0 TDi,2.0 TDi 16V<br>2.0 TDi PD 16V | 5P2/031/071/131/141<br>171/231/241/261/271 | D | 1968 | AZV,BKD,BMM/F,BMN | M | + | | 09/04 ▸ | 1K0959455DH | |
| 2.0 TDi 16V | 5P2/231/241 | D | 1968 | AZV,BKD | M | + | | 09/04 ▸ | 1K0959455P | |
| 2.0 TDi,2.0 TDi 16V<br>2.0 TDi PD 16V | 5P2/033/073/133/143<br>173/233/273 | D | 1968 | AZV,BKD,BMM/F,BMN | A | +/- | Left/gauche | 09/04 ▸ | 1K0959455EA | |
| 2.0 TDi,2.0 TDi 16V<br>2.0 TDi PD 16V | 5P2/033/073/133/143<br>173/233/273 | D | 1968 | AZV,BKD,BMM/F,BMN | A | +/- | Right/Droite | 09/04 ▸ | 1K0959455DG | |
| 2.0 TDi,2.0 TDi 16V<br>2.0 TDi PD 16V | 5P2/033/073/133/143<br>173/233/273 | D | 1968 | AZV,BKD,BMM/F,BMN | A | +/- | Left/gauche | 09/04 ▸ | 1K0959455N | |
| 2.0 TDi,2.0 TDi 16V<br>2.0 TDi PD 16V | 5P2/033/073/133/143<br>173/233/273 | D | 1968 | AZV,BKD,BMM/F,BMN | A | +/- | Left/gauche | 09/04 ▸ | 1K0959455P | |
| 2.0 TDi,2.0 TDi 16V<br>2.0 TDi PD 16V | 5P2/033/073/133/143<br>173/233/243/273 | D | 1968 | AZV,BKD,BMM/F,BMN | A | + | | 09/04 ▸ | 1K0959455DH | |
| 2.0 TDi 16V | 5P2/233/243 | D | 1968 | AZV,BKD | A | + | | 09/04 ▸ | 1K0959455DG | |
| 2.0 TDi 16V | 5P2/233/243 | D | 1968 | AZV,BKD | A | + | | 09/04 ▸ | 1K0959455Q | |
| 2.0 TDi 16V | 5P2/233/243 | D | 1968 | AZV,BKD | A | + | | 09/04 ▸ | 1K0959455P | |
| 2.0 TDi 16V | 5P2/233/243 | D | 1968 | AZV,BKD | A | + | | 09/04 ▸ | 1K0959455N | |
| 2.0 TDi 16V | 5P2/233/243 | D | 1968 | AZV,BKD | A | + | | 09/04 ▸ | 1K0959455EA | |
| 2.0 TDi 16V | 5P2/233/243 | D | 1968 | AZV,BKD | A | + | | 09/04 ▸ | 1K0959455R | |

## SEAT

### INCA

| | | CC | | | AC | | | OE | Valeo |
|---|---|---|---|---|---|---|---|---|---|
| 1.4 i<br>9K-V-008 001 ▸ | 6K9/1A1/1U1/1V1/2A1/2U1/2U4/2V1/3A1/3U1/3U4<br>3V1/4A1/4U1/4V1 | E | 1390 | AEX,AKV,APQ | M | + | Left/gauche | 02/97 ▸ 06/03 | 6K0959455A | **698357** |
| 1.4 i,1.4 i 16V<br>9K-V-008 001, 9K-2-008 001 ▸ | 6K9/1A1/1D6/1E6/1U1<br>1V1/2A1/2D6/2E6/2U1/2U4/2V1/3A1/3D6/3E6/3U1<br>3U4/3V1/4A1/4D6/4E6/4U1/4V1 | E | 1390 | AEX,AKV,APQ,AUA,AUD | M | + | Right/Droite | 02/97 ▸ 06/03 | 6K0959455B | **698358** |
| 1.6 i<br>9K-V-008 001 ▸ | 6K9/1D2/2D2/2D3/3D2/3D3/4D2 | E | 1595 | 1F | M | + | Left/gauche | 02/97 ▸ 05/97 | 6K0959455A | **698357** |
| 1.6 i | 6K9/1D2/2D2/2D3/3D2/3D3/4D2 | E | 1595 | 1F | M | - | Left/gauche | 11/95 ▸ 05/97 | 1H0959455D | **698367** |
| 1.6 i | 6K9/152/252/253/352/353/452 | E | 1598 | AEE | M | + | Left/gauche | 06/97 ▸ 09/00 | 6K0959455A | **698357** |
| 1.6 i | 6K9/152/252/253/352/353/452 | E | 1598 | AEE | M | + | Right/Droite | 06/97 ▸ 05/98 | 6K0959455B | **698358** |
| 1.6 i | 6K9/152/252/253/352/353/452 | E | 1598 | AEE | M | - | Left/gauche | 06/97 ▸ 05/98 | 165959455T | **698368** |
| 1.7 SDi<br>9K-V-008 001 ▸ | 6K9/121/221/321/421 | D | 1714 | AHB | M | + | Left/gauche | 02/97 ▸ 09/00 | 6K0959455A | **698357** |
| 1.7 SDi<br>9K-V-008 001 ▸ | 6K9/121/221/321/421 | D | 1714 | AHB | M | + | Right/Droite | 02/97 ▸ 09/00 | 6K0959455B | **698358** |
| 1.7 SDi | 6K9/121/221/321/421 | D | 1714 | AHB | M | - | Left/gauche | 09/96 ▸ 09/00 | 165959455T | **698368** |
| 1.9 D<br>F9K-V-008001 ▸ | 6K9/2Y1/3Y1 | D | 1896 | 1Y | M | +/- | Left/gauche | 11/95 ▸ 06/03 | 6K0959455A | **698357** |
| 1.9 SDi<br>9k-V-008 001 ▸ | 6K9/1Z1/2Z1/3Z1/4Z1 | D | 1896 | AEY | M | + | Left/gauche | 02/97 ▸ 09/00 | 6K0959455A | **698357** |
| 1.9 SDi | 6K9/136/1Z1/236/2Z1<br>336/3Z1/436/4Z1 | D | 1896 | AEY,AYQ | M | + | Right/Droite | 02/97 ▸ 06/03 | 6K0959455B | **698358** |
| 1.9 D | 6K9/1Y1/2Y1/3Y1/4Y1 | D | 1896 | 1Y | M | - | Right/Droite | 11/95 ▸ 06/03 | 6K0959455B | **698358** |
| 1.9 SDi | 6K9/1Z1/2Z1/3Z1/4Z1 | D | 1896 | AEY | M | - | Left/gauche | 12/95 ▸ 09/00 | 165959455T | **698368** |
| 1.9 D<br>9K-1-008 001 ▸ | 6K9/1Y1/4Y1 | D | 1896 | 1Y | M | - | Left/gauche | 09/00 ▸ 06/03 | 6K0959455A | **698357** |

| Type Ctr. | | CC | | AC | | 2+3 | OE | Valeo | |
|---|---|---|---|---|---|---|---|---|---|
| **SEAT (.../...)** | | | | | | | | | |
| **INCA (.../...)** | | | | | | | | | |
| 1.9 D,1.9 SDi 6K9/136/1Y1/236/2Y1 336/3Y1/436/4Y1 | D | 1896 | 1Y,AYQ | M | | Right/Droite | 11/95 ▸ 06/03 | 6K0959455D | **698359** |
| 1.9 SDi 6K9/136/236/336/436 | D | 1896 | AYQ | M | | Left/gauche | 09/00 ▸ 06/03 | 6K0959455AA | **698528** |
| 1.9 D 6K9/1Y1/2Y1/3Y1/4Y1 | D | 1896 | 1Y | M | + | Left/gauche | 02/97 ▸ 09/00 | 6K0959455C | **698360** |
| **SKODA** | | | | | | | | | |
| **FABIA (99>2004)** | | | | | | | | | |
| 1.0 i 6Y2/0A4/1A4 | E | 997 | AQV,ARV | M | + | Left/gauche | 10/00 ▸ 08/02 | 6X0959455A | **696042** |
| 1.0 i 6Y2/0A4/1A4 | E | 997 | AQV,ARV | M | + | Right/Droite | 10/00 ▸ 08/02 | 1J0959455M | **698373** |
| 1.0 i 6Y2/0A4/1A4 | E | 997 | AQV,ARV | M | - | | 10/00 ▸ 08/02 | 6E0959455A | |
| 1.0 i 6Y2/0A4/1A4 | E | 997 | AQV,ARV | M | - | C | 05/01 ▸ 08/02 | 6Q0959455AF | **696019** |
| 1.2 i,1.2 i 6V 6Y2/0C4/1C4/1E4/2C4 2E4/3E4, 6Y3/1C4/1E4/2C4/2E4/3E4, 6Y5/1C4 1E4/2C4/2E4/3E4/PC4/PE4 | E | 1198 | AWY,AZQ | M | +/- | | 07/01 ▸ 07/04 | 6Q0959455J | |
| 1.2 i 6Y2/1E4/2E4/3E4, 6Y3/1E4/2E4/3E4, 6Y5/1E4 2E4/3E4/PE4 | E | 1198 | AZQ | M | +/- | Left/gauche | 01/03 ▸ 07/04 | 6X0959455C | **696078** |
| 1.2 i,1.2 i 6V 6Y2/0C4/1C4/1E4/2C4 2E4/3E4, 6Y3/1C4/1E4/2C4/2E4/3E4, 6Y5/1C4 1E4/2C4/2E4/3E4/PC4/PE4 | E | 1198 | AWY,AZQ,BMD | M | - | C | 07/01 ▸ 07/04 | 6Q0959455AF | **696019** |
| 1.4 i 16V 6Y2/1J4/2J4/3J4, 6Y3 1J4/2J4/3J4, 6Y5/1J4/2J4/3J4 | E | 1390 | BBZ | M | +/- | Left/gauche | 05/02 ▸ 07/04 | 6X0959455C | **696078** |
| 1.4 i 16V 6Y2/1F4/1J4/2F4/2J4 3F4/3J4, 6Y3/1F4/1J4/2F4/2J4/3F4/3J4, 6Y5 1F4/1J4/2F4/2J4/3F4/3J4 | E | 1390 | AUA,AUB,BBY,BBZ,BKY | M | + | | 10/99 ▸ 07/04 | 6Q0959455J | |
| 1.4 i 16V 6Y2/1F4/2F4/3F4, 6Y3 1F4/2F4/3F4, 6Y5/1F4/2F4/3F4 | E | 1390 | BBY,BKY | M | + | | 05/04 ▸ 07/04 | 6Q0959455AD | |
| 1.4 i 16V 6Y2/1F4/2F4/3F4, 6Y3 1F4/2F4/3F4, 6Y5/1F4/2F4/3F4 | E | 1390 | AUA,BBY,BKY | M | - | C | 10/99 ▸ 07/04 | 6E0959455A | |
| 1.4 i 16V 6Y2/1F4/2F4/3F4, 6Y3 1F4/2F4/3F4, 6Y5/1F4/2F4/3F4 | E | 1390 | AUA,BBY,BKY | M | - | C | 05/01 ▸ 07/04 | 6Q0959455AF | **696019** |
| 1.4 i 16V 6Y2/1J4/2J4/3J4, 6Y3 1J4/2J4/3J4, 6Y5/1J4/2J4/3J4 | E | 1390 | AUB | M | | Left/gauche | 11/99 ▸ 08/03 | 6X0959455C | **696078** |
| 1.4 i 16V 6Y2/1F3/2F3/3F3, 6Y3 1F3/2F3/3F3, 6Y5/1F3/2F3/3F3 | E | 1390 | AUA,BBY | A | +/- | | 05/00 ▸ 05/04 | 6X0959455A | **696042** |
| 1.4 i 16V 6Y2/1F3/2F3/3F3, 6Y3 1F3/2F3/3F3, 6Y5/1F3/2F3/3F3 | E | 1390 | AUA | A | + | | 05/00 ▸ 08/03 | 6Q0959455J | |
| 1.4 i 16V 6Y2/1F3/2F3/3F3, 6Y3 1F3/2F3/3F3, 6Y5/1F3/2F3/3F3 | E | 1390 | AUA | A | + | Left/gauche | 05/00 ▸ 08/03 | 6X0959455C | **696078** |
| 1.4 i 16V 6Y2/1F3/2F3/3F3, 6Y3 1F3/2F3/3F3, 6Y5/1F3/2F3/3F3 | E | 1390 | BBY | A | + | Right/Droite | 04/02 ▸ 05/04 | 1J0959455M | **698373** |
| 1.4 i 16V 6Y2/1F3/2F3/3F3, 6Y3 1F3/2F3/3F3, 6Y5/1F3/2F3/3F3 | E | 1390 | BKY | A | + | | 05/04 ▸ 07/04 | 6Q0959455AD | |
| 1.4 i 16V 6Y2/1F3/2F3/3F3, 6Y3 1F3/2F3/3F3, 6Y5/1F3/2F3/3F3 | E | 1390 | AUA,BBY,BKY | A | - | C | 05/00 ▸ 07/04 | 6E0959455A | |
| 1.4 i 16V 6Y2/1F3/2F3/3F3, 6Y3 1F3/2F3/3F3, 6Y5/1F3/2F3/3F3 | E | 1390 | BKY | A | - | C | 05/04 ▸ 07/04 | 6X0959455A | **696042** |
| 1.4 i 16V 6Y2/1F4/2F4/3F4, 6Y3 1F4/2F4/3F4, 6Y5/1F4/2F4/3F4 ▸ 6Y-4-118-574 | E | 1390 | AUA,BBY,BKY | M | + | Left/gauche | 10/99 ▸ 07/04 | 6X0959455C | **696078** |
| 1.4 i 6Y2/0B4/1B4/1D4/2B4/2D4/3D4, 6Y3/1B4/1D4/2B4 2D4/3D4, 6Y5/1B4/1D4/2B4/2D4/3D4/PB4/PD4 | E | 1397 | AME,AQW,ATZ,AZE,AZF | M | + | Right/Droite | 08/99 ▸ 05/03 | 1J0959455M | **698373** |
| 1.4 i 6Y2/0B4/1B4/1D4/2B4/2D4/3D4, 6Y3/1B4/1D4/2B4 2D4/3D4, 6Y5/1B4/1D4/2B4/2D4/3D4/PB4/PD4 | E | 1397 | AME,AQW,ATZ,AZE,AZF | M | + | Left/gauche | 08/99 ▸ 05/03 | 6X0959455A | **696042** |
| 1.4 i 6Y2/0B4/1B4/1D4/2B4/2D4/3D4, 6Y3/1B4/1D4/2B4 2D4/3D4, 6Y5/1B4/1D4/2B4/2D4/3D4/PB4/PD4 | E | 1397 | AME,AQW,ATZ,AZE,AZF | M | - | C | 08/99 ▸ 05/03 | 6E0959455A | |
| 1.4 i 6Y3/1B4/2B4, 6Y5/1B4/2B4/PB4 | E | 1397 | AZF | M | | Right/Droite | 04/00 ▸ 03/03 | 1J0959455M | **698373** |
| 2.0 i 6Y2/1T4/2T4, 6Y3/1T4/2T4, 6Y5/1T4/2T4 | E | 1984 | AZL | M | +/- | Left/gauche | 12/99 ▸ 07/04 | 6X0959455C | **696078** |
| 2.0 i 6Y2/1T4/2T4, 6Y3/1T4/2T4, 6Y5/1T4/2T4 | E | 1984 | AZL | M | +/- | Right/Droite | 12/99 ▸ 07/04 | 1J0959455M | **698373** |
| 2.0 i 6Y33T4, 6Y53T4, 6Y2/3T4 | E | 1984 | AZL | M | + | Left/gauche | 12/99 ▸ 07/04 | 6X0959455C | **696078** |
| 2.0 i 6Y23T4, 6Y53T4 | E | 1984 | AZL | M | + | Right/Droite | 12/99 ▸ 07/04 | 1J0959455M | **698373** |
| 2.0 i 6Y33T4 | E | 1984 | AZL | M | - | Right/Droite | 12/99 ▸ 07/04 | 1J0959455M | **698373** |
| 1.4 TDi 6Y2144 | D | 1422 | AMF | M | + | Right/Droite | 04/03 ▸ 07/04 | 1J0959455M | **698373** |
| 1.4 TDi 6Y2/244/344, 6Y3/144 244/344, 6Y5/144/244/344 ▸ 6y-5-377 711 | D | 1422 | AMF | M | - | | 04/03 ▸ 07/04 | 1J0959455M | **698373** |
| 1.9 TDi 6Y3164, 6Y5164, 6Y2 164/585 | D | 1896 | ASZ,ATD | M | +/- | Left/gauche | 01/00 ▸ 07/04 | 6X0959455C | **696078** |

Fan Motor + Blades Moteur + hélice Lüftermotor + Lüfterrad Motorino + Ventola Ventilatormotor Fan motoru + Kanatlar
Moto-ventilador + Aspas Мотор вентилятора + лопасти вентилятора Ventilátor motor és lapát Motor sahary + vrtule Ventilator motor + Lame Μοτέρ ανεμιστήρων + Πτερωτές



• **New** Nouveau **Nuevo** Novo **Nuovo** Nieuw **Neu** Nowość **Yeni** Новый Νέο **Novy**

| Type Ctr. | | CC | | AC | | | OE | Valeo | |
|---|---|---|---|---|---|---|---|---|---|

# SKODA (.../...)

## FABIA (99>2004) (.../...)

| | | | | | | | | | |
|---|---|---|---|---|---|---|---|---|---|
| 1.9 TDi 6Y2/164/585, 6Y5164 6Y3/164/364 | D | 1896 | ASZ,ATD | M | +/- | Right/Droite | 01/00 ▸ 07/04 | 1J0959455M | **698373** |
| 1.9 SDi,1.9 TDi 6Y2/124/224/324/364 6Y3/124/224/324/364, 6Y5/124/224/324/364 P24 | D | 1896 | ASY,ATD | M | + | Left/gauche | 11/99 ▸ 07/04 | 6X0959455C | **696078** |
| 1.9 SDi,1.9 TDi 6Y2/124/224/324, 6Y3 124/224/324/364, 6Y5/124/224/324 | D | 1896 | ASY,ATD | M | + | | 11/99 ▸ 07/04 | 6Q0959455J | |
| 1.9 TDi 6Y2364 | D | 1896 | ATD | M | + | Right/Droite | 01/00 ▸ 11/02 | 1J0959455M | **698373** |
| 1.9 SDi,1.9 TDi 6Y2/124/164/224/264 324/364, 6Y3/124/164/224/264/324/364, 6Y5 124/164/224/264/324/364/P24 6Y-4-118 575 ▸ | D | 1896 | ASY,ATD | M | + | C | 04/03 ▸ | 6Q0959455AD | |
| 1.9 TDi 6Y3264, 6Y2/264, 6Y5 264/364 | D | 1896 | ATD | M | - | Right/Droite | 01/00 ▸ 11/02 | 1J0959455M | **698373** |
| 1.9 TDi 6Y3264, 6Y5264, 6Y2 264 | D | 1896 | ATD | M | - | Left/gauche | 01/00 ▸ 11/02 | 6X0959455C | **696078** |

## FABIA (FL) (2004>2007)

| | | | | | | | | | |
|---|---|---|---|---|---|---|---|---|---|
| 1.2 i 6Y2/0C4/1C4/2C4, 6Y3/1C4/2C4, 6Y5/1C4/2C4 PC4 | E | 1198 | BMD | M | + | | 08/04 ▸ 12/07 | 6Q0959455AD | |
| 1.2 i 12V 6Y21E4 | E | 1198 | BME-E4 | M | + | Right/Droite | 12/04 ▸ 04/07 | 1J0959455M | **698373** |
| 1.2 i 12V 6Y21E4 | E | 1198 | BME-E4 | M | + | Left/gauche | 12/04 ▸ 04/07 | 6X0959455A | **696042** |
| 1.2 i 12V 6Y2/1E4/2E4/3E4, 6Y3 1E4/2E4/3E4, 6Y5/1E4/2E4/3E4/PE4 | E | 1198 | AZQ,BME-E4 | M | - | | 08/04 ▸ 04/05 | 6Q0959455J | |
| 1.2 i 12V 6Y2/1E4/2E4/3E4, 6Y3 1E4/2E4, 6Y5/2E4/3E4 | E | 1198 | BME-E4 | M | - | C | 12/04 ▸ 12/07 | 6Q0959455AF | **696019** |
| 1.2 i 12V 6Y2/1E4/2E4/3E4, 6Y3 1E4/2E4/3E4, 6Y5/1E4/2E4/3E4/PE4 6Y-54377 712, 6Y-5-377 712 ▸ | E | 1198 | BME-E4 | M | - | | 04/05 ▸ | 6Q0959455AD | |
| 1.2 i,1.2 i 12V 6Y2/0C4/1C4/1E4/2C4 2E4/3E4, 6Y3/1C4/1E4/2C4/2E4/3E4, 6Y5/1C4 1E4/2C4/2E4/3E4/PC4/PE4 | E | 1198 | AZQ,BMD,BME-E4 | M | | | 08/04 ▸ 12/07 | 6Q0959455AF | **696019** |
| 1.2 i,1.2 i 12V 6Y2/0C4/1C4/1E4/2C4 2E4/3E4, 6Y3/1C4/1E4/2C4/2E4, 6Y5/1C4/2C4 2E4/3E4/PC4 ▸ 6Y-5-377 711, 6Y-54377 711 | E | 1198 | BMD,BME-E4 | M | | Right/Droite | 08/04 ▸ 05/05 | 6Q0959455J | |
| 1.2 i 6Y2/0C4/1C4/2C4, 6Y3/1C4/2C4, 6Y5/1C4/2C4 PC4 ▸ 6Y-54377 711 | E | 1198 | BMD | M | | | 08/04 ▸ 04/05 | 6X0959455C | **696078** |
| 1.2 i 12V 6Y2/1E4/2E4/3E4, 6Y3 1E4/2E4/3E4, 6Y5/1E4/2E4/3E4/PE4 ▸ 6Y-54377 711, 6Y-5-377 711 | E | 1198 | AZQ,BME-E4 | M | - | | 08/04 ▸ 04/05 | 6X0959455C | **696078** |
| 1.4 i 16V 6Y2/1J4/2J4/3J4, 6Y3 1J4/2J4/3J4, 6Y5/1J4/2J4/3J4 | E | 1390 | BBZ-E4 | M | + | | 08/04 ▸ 12/07 | 6Q0959455J | |
| 1.4 i 16V 6Y2/1F4/1J4/2F4/2J4 3F4/3J4, 6Y3/1F4/1J4/2F4/2J4/3F4/3J4, 6Y5 1F4/1J4/2F4/2J4/3F4/3J4 | E | 1390 | BBZ-E4,BKY | M | + | | 08/04 ▸ 12/07 | 6Q0959455AD | |
| 1.4 i 16V 6Y2/1J4/2J4/3J4, 6Y3 1J4/2J4/3J4, 6Y5/1J4/2J4/3J4 | E | 1390 | BBZ-E4 | M | + | | 08/04 ▸ 12/07 | 6X0959455C | **696078** |
| 1.4 i 16V 6Y2/1F4/2F4/3F4, 6Y3 1F4/2F4/3F4, 6Y5/1F4/2F4/3F4 | E | 1390 | BKY | M | - | | 08/04 ▸ 12/07 | 6E0959455A | |
| 1.4 i 16V 6Y33J4, 6Y2/1J4, 6Y5 1J4/2J4 | E | 1390 | BBZ-E4 | M | - | | 08/04 ▸ 12/07 | 6X0959455C | **696078** |
| 1.4 i 16V 6Y2/1F4/1J4/2F4/2J4 3F4/3J4, 6Y3/1F4/1J4/2F4/2J4/3F4/3J4, 6Y5 1F4/1J4/2F4/2J4/3F4/3J4 | E | 1390 | BBZ-E4,BKY | M | - | | 08/04 ▸ 12/07 | 6Q0959455AF | **696019** |
| 1.4 i 16V 6Y2/1F3/2F3/3F3, 6Y3 1F3/2F3/3F3, 6Y5/1F3/2F3/3F3 | E | 1390 | BKY | A | + | | 08/04 ▸ 12/07 | 6Q0959455AD | |
| 1.4 i 16V 6Y2/1F3/2F3/3F3, 6Y3 1F3/2F3/3F3, 6Y5/1F3/2F3/3F3 | E | 1390 | BKY | A | - | | 08/04 ▸ 12/07 | 6E0959455A | |
| 1.4 i 16V 6Y2/1F3/2F3/3F3, 6Y3 1F3/2F3/3F3, 6Y5/1F3/2F3/3F3 | E | 1390 | BKY | A | - | | 08/04 ▸ 12/07 | 6X0959455A | **696042** |
| 2.0 i 6Y2/1T4/2T4/3T4, 6Y3/1T4/2T4/3T4, 6Y5/1T4 2T4/3T4 | E | 1984 | AZL-E4 | M | + | | 08/04 ▸ 12/07 | 1J0959455M | **698373** |
| 2.0 i 6Y2/1T4/2T4/3T4, 6Y3/1T4/2T4/3T4, 6Y5/1T4 2T4/3T4 | E | 1984 | AZL-E4 | M | | | 08/04 ▸ 12/07 | 6X0959455C | **696078** |
| 1.9 TDi 6Y2585 | D | 1896 | ASZ,BLT | M | +/- | | 08/04 ▸ 04/07 | 6X0959455C | **696078** |
| 1.9 TDi 6Y2585 | D | 1896 | BLT | M | +/- | | 10/05 ▸ 04/07 | 1J0959455M | **698373** |
| 1.9 TDi 6Y2/164/264/364, 6Y3 164/264/364, 6Y5/164/264/364 | D | 1896 | AXR | M | +/- | | 10/05 ▸ 12/07 | 6Q0959455AD | |

# SKODA (.../...)

## FABIA (FL) (2004>2007) (.../...)

| Type Ctr. | | | CC | | | AC | | | OE | Valeo | |
|---|---|---|---|---|---|---|---|---|---|---|---|
| 1.9 TDi | 6Y2/264/364, 6Y5164 6Y3/264/364 | D | 1896 | ATD | M | + | | 08/04 ▸ 04/07 | 6Q0959455AD | | |
| 1.9 TDi | 6Y2/164/264/364, 6Y3 164/264/364, 6Y5/164/264/364 | D | 1896 | ATD | M | - | | 08/04 ▸ 04/05 | 1J0959455M | **698373** | |
| 1.9 SDi | 6Y2/124/224/324, 6Y3 124/224/324, 6Y5/124/224/324/P24 | D | 1896 | ASY | M | - | | 08/04 ▸ 12/07 | 6E0959455A | | |
| 1.9 TDi | 6Y2/164/264/364, 6Y3 164/264/364, 6Y5/164/264/364 6Y-54377 712 ▸ | D | 1896 | ATD | M | - | | 04/05 ▸ 04/07 | 6Q0959455AD | | |
| 1.9 TDi | 6Y2/164/264/364, 6Y3 164/264/364, 6Y5/164/264/364 | D | 1896 | ATD | M | - | | 08/04 ▸ 04/05 | 6X0959455C | **696078** | |

## FABIA II (2007>)

| | | | | | | | | | | | |
|---|---|---|---|---|---|---|---|---|---|---|---|
| 1.2 i,1.2 i 12V | 542/1B4/1D4/2B4/2D4 3B4/3D4/4B4/4D4 | E | 1198 | BBM-E4,BZG-E4 | M | +/- | | 12/06 ▸ | 6Q0959455AD | | |
| 1.2 i,1.2 i 12V | 542/1B4/1D4/2B4/2D4 3B4/3D4/4B4/4D4 | E | 1198 | BBM-E4,BZG-E4 | M | | | 12/06 ▸ | 6Q0959455AF | **696019** | |
| 1.4 i 16V | 542/1D4/1G4/2G4/3G4 4G4 | E | 1390 | BXW-E4 | M | + | | 01/07 ▸ | 6Q0959455AD | | |
| 1.4 i 16V | 542/1D4/1G4/2G4/3G4 4G4 | E | 1390 | BXW-E4 | M | - | | 01/07 ▸ | 6E0959455A | | |
| 1.4 i 16V | 542/1D4/1G4/2G4/3G4 4G4 | E | 1390 | BXW-E4 | M | - | | 01/07 ▸ | 6Q0959455AF | **696019** | |
| 1.6 i 16V | 542/1K4/2K4/3K4/4K4 | E | 1598 | BTS-E4 | M | + | | 04/07 ▸ | 6Q0959455AD | | |
| 1.6 i 16V | 542/1K4/2K4/3K4/4K4 | E | 1598 | BTS-E4 | M | - | | 04/07 ▸ | 6Q0959455AF | **696019** | |
| 1.6 i 16V | 542/1K4/2K4/3K4/4K4 | E | 1598 | BTS-E4 | M | - | | 04/07 ▸ | 6X0959455C | **696078** | |
| 1.6 i 16V | 542/1KC/2KC/3KC/4KC | E | 1598 | BTS-E4 | A | + | | 07/07 ▸ | 6Q0959455AD | | |
| 1.6 i 16V | 542/1KC/2KC/3KC/4KC | E | 1598 | BTS-E4 | A | - | | 07/07 ▸ | 6Q0959455AF | **696019** | |
| 1.6 i 16V | 542/1KC/2KC/3KC/4KC | E | 1598 | BTS-E4 | A | - | | 07/07 ▸ | 6X0959455C | **696078** | |
| 1.4 TDI | 542/144/244/344/444 | D | 1422 | BMS/F | M | +/- | | 01/07 ▸ | 6Q0959455AD | | |
| 1.9 TDI | 542/164/174/264/274 364/374/464/474 | D | 1896 | BLS,BSW | M | +/- | | 04/07 ▸ | 6Q0959455AD | | |

## OCTAVIA (96>2000)

| | | | | | | | | | | | |
|---|---|---|---|---|---|---|---|---|---|---|---|
| 1.6 i | 1U5/1E4/1F4/2E4/2F4/3E4/3F4 | E | 1595 | AEH | M | + | | 05/98 ▸ 07/00 | 1J0959455M | **698373** | |
| 1.6 i | 1U5/1F4/2E4/2F4/3E4/3F4 | E | 1595 | AEH | M | + | | 05/98 ▸ 07/00 | 6X0959455A | **696042** | |
| 1.6 i | 1U5/1E4/1F4/2E4/2F4/3E4/3F4 | E | 1595 | AEH | M | - | | 05/98 ▸ 07/00 | 6E0959455A | | |
| 1.6 i | 1U5/1E4/2E4/3E4 | E | 1595 | AEH | M | - | | 05/98 ▸ 07/00 | 6X0959455A | **696042** | |
| 1.6 i | 1U53E3 | E | 1595 | AKL | A | + | | 08/98 ▸ 07/00 | 6X0959455A | **696042** | |
| 1.6 i | 1U5/2E3/2F3/2L3/3E3/3F3/3L3 | E | 1595 | AEH,AKL | A | + | | 08/98 ▸ 07/00 | 1J0959455M | **698373** | |
| 1.6 i | 1U5/2E3/2F3/2L3/3E3/3F3/3L3 | E | 1595 | AEH,AKL | A | - | | 08/98 ▸ 07/00 | 6E0959455A | | |
| 1.6 i | 1U5/2E3/2F3/2L3/3F3/3L3 | E | 1595 | AEH,AKL | A | - | | 08/98 ▸ 07/00 | 6X0959455A | **696042** | |
| 1.6 i | 1U51D4 | E | 1598 | AEE | M | + | | 05/98 ▸ 07/00 | 1J0959455M | **698373** | |
| 1.6 i | 1U51D4 | E | 1598 | AEE | M | - | | 05/98 ▸ 07/00 | 6E0959455A | | |
| 1.6 i | 1U51D4 | E | 1598 | AEE | M | - | | 05/98 ▸ 07/00 | 6X0959455A | **696042** | |
| 1.8 i 20V,1.8 i Turbo 20V | 1U5/2R4/3Q4/3R4/4Q4 4S4 | E | 1781 | AGN,AGU,ARZ | M | + | | 05/98 ▸ 07/00 | 1J0959455M | **698373** | |
| 1.8 i Turbo 20V | 1U5/3Q4/4Q4/4S4 | E | 1781 | AGU,ARZ | M | + | | 08/98 ▸ 07/00 | 6X0959455A | **696042** | |
| 1.8 i 20V,1.8 i Turbo 20V | 1U5/2R4/3Q4/3R4 | E | 1781 | AGN,AGU | M | - | | 05/98 ▸ 04/99 | 6X0959455A | **696042** | |
| 1.8 i 20V,1.8 i Turbo 20V | 1U5/2R4/3Q4/3R4/4Q4 4S4 | E | 1781 | AGN,AGU,ARZ | M | - | | 05/98 ▸ 07/00 | 6E0959455A | | |
| 1.8 i 20V,1.8 i Turbo 20V | 1U5/2P3/3P3/3Q3/4Q3 | E | 1781 | AGN,AGU | A | + | | 08/98 ▸ 07/00 | 1J0959455M | **698373** | |
| 1.8 i Turbo 20V | 1U54Q3 | E | 1781 | AGU | A | + | | 01/99 ▸ 07/00 | 6X0959455A | **696042** | |
| 1.8 i 20V,1.8 i Turbo 20V | 1U5/2P3/3P3/3Q3/4Q3 | E | 1781 | AGN,AGU | A | - | | 08/98 ▸ 07/00 | 6E0959455A | | |
| 1.8 i 20V,1.8 i Turbo 20V | 1U5/2P3/3P3/3Q3 | E | 1781 | AGN,AGU | A | - | | 08/98 ▸ 07/00 | 6X0959455A | **696042** | |
| 2.0 i | 1U53TX | E | 1984 | AZH | M | + | | 11/99 ▸ 07/00 | 1J0959455M | **698373** | |
| 2.0 i | 1U53TX | E | 1984 | AZH | M | + | | 11/99 ▸ 07/00 | 6X0959455A | **696042** | |
| 2.0 i | 1U5/2TX/3TX | E | 1984 | AZH | M | - | | 11/99 ▸ 07/00 | 6E0959455A | | |
| 2.0 i | 1U52TX | E | 1984 | AZH | M | - | | 11/99 ▸ 07/00 | 6X0959455A | **696042** | |
| 2.0 i | 1U52TX | E | 1984 | AZH | M | - | | 11/99 ▸ 07/00 | 1J0959455M | **698373** | |
| 1.9 SDi,1.9 TDi | 1U5/164/274/27X/374 37X/384/484/774 | D | 1896 | AGP,AGR,AHF | M | + | | 05/98 ▸ 07/00 | 1J0959455M | **698373** | |
| 1.9 SDi,1.9 TDi | 1U5/164/374/774 | D | 1896 | AGP,AGR | M | + | | 05/98 ▸ 07/00 | 6X0959455A | **696042** | |
| 1.9 TDi | 1U5/274/27X/374/37X 384/484 | D | 1896 | AGR,AHF | M | - | | 05/98 ▸ 07/00 | 6X0959455A | **696042** | |
| 1.9 SDi,1.9 TDi | 1U5/164/274/27X/374 37X/384/484/774 | D | 1896 | AGP,AGR,AHF | M | - | | 05/98 ▸ 07/00 | 6E0959455A | | |

## OCTAVIA (2000>2004)

| | | | | | | | | | | | |
|---|---|---|---|---|---|---|---|---|---|---|---|
| 1.4 i,1.4 i 16V | 1U2/1A4/1B4/2B4, 1U5 1B4/2B4 | E | 1390 | AMD,AXP,BCA | M | +/- | | 08/00 ▸ 12/10 | 6X0959455A | **696042** | |

Fan Motor + Blades Moteur + hélice Lüftermotor + Lüfterrad Motorino + Ventola Ventilatormotor Fan motoru + Kanatlar
Moto-ventilador + Aspas Мотор вентилятора + лопасти вентилятора Ventilátor motor és lapát Motor sahary + vrtule Ventilator motor + Lame Μοτέρ ανεμιστήρων + Πτερωτές



• **New** Nouveau **Nuevo** Novo **Nuovo** Nieuw **Neu** Nowość **Yeni** Новый Νέο **Novy**

## OCTAVIA (2000>2004) (.../...)

| | | CC | | AC | | | | OE | Valeo |
|---|---|---|---|---|---|---|---|---|---|
| 1.4 i 16V 1U52B4, 1U2/1B4/2B4 | E | 1390 | BCA | M | + | Right/Droite | 01/02 ▸ 12/10 | 1J0959455M | **698373** |
| 1.4 i 1U22A4 | E | 1390 | AMD | M | - | | 08/00 ▸ 03/01 | 6X0959455A | **696042** |
| 1.4 i,1.4 i 16V 1U2/1A4/1B4/2A4/2B4 1U5/1B4/2B4 | E | 1390 | AMD,AXP,BCA | M | | | 08/00 ▸ 12/10 | 6E0959455A | |
| 1.6 i 1U2/1E3/1E4/1G4/2E4/2G4/3E4/3G4, 1U5/1E4/1G4 2E4/2G4/3E4/3G4 | E | 1595 | AEH,AKL,AVU,BFQ | M | +/- | Left/gauche | 08/00 ▸ 12/10 | 6X0959455A | **696042** |
| 1.6 i 1U2/1E3/1E4/1G4/2E4/2G4/3E4/3G4, 1U5/1E4/1G4 2E4/2G4/3E4/3G4 | E | 1595 | AEH,AKL,AVU,BFQ | M | + | Right/Droite | 08/00 ▸ 12/10 | 1J0959455M | **698373** |
| 1.6 i 1U2/1E4/2E4/3E4, 1U5/1E4/2E4/3E4 | E | 1595 | AEH | M | - | Left/gauche | 08/00 ▸ 09/04 | 6X0959455A | **696042** |
| 1.6 i 1U2/1E3/1E4/1G4/2E4/2G4/3E4/3G4, 1U5/1E4/1G4 2E4/2G4/3E4/3G4 | E | 1595 | AEH,AKL,AVU,BFQ | M | | | 08/00 ▸ 12/10 | 6E0959455A | |
| 1.6 i 1U2/1E3/1G3/2E3/2G3/3E3/3G3, 1U5/1E3/1G3/2E3 2G3/3E3/3G3 | E | 1595 | AEH,AKL,AVU,BFQ | A | +/- | Left/gauche | 08/00 ▸ 12/07 | 6X0959455A | **696042** |
| 1.6 i 1U2/1E3/1G3/2E3/2G3/3E3/3G3, 1U5/1E3/1G3/2E3 2G3/3E3/3G3 | E | 1595 | AEH,AKL,AVU,BFQ | A | + | Right/Droite | 08/00 ▸ 12/07 | 1J0959455M | **698373** |
| 1.6 i 1U2/2E3/3E3, 1U5/1E3/2E3 | E | 1595 | AEH | A | - | | 08/00 ▸ 05/07 | 6X0959455A | **696042** |
| 1.6 i 1U2/1E3/1G3/2E3/2G3/3E3/3G3, 1U5/1E3/1G3/2E3 2G3/3E3/3G3 | E | 1595 | AEH,AKL,AVU,BFQ | A | | | 08/00 ▸ 12/07 | 6E0959455A | |
| 1.6 i 1U2/1D4/2D4, 1U5/1D4/2D4 | E | 1598 | AEE | M | +/- | | 08/00 ▸ 09/04 | 6X0959455A | **696042** |
| 1.6 i 1U2/1D4/2D4, 1U5/1D4/2D4 | E | 1598 | AEE | M | | | 08/00 ▸ 09/04 | 6E0959455A | |
| 1.8 20V,1.8 i Turbo 20V 1U2/1Q4/2Q4/3Q4/4Q4 5Q4/5R4/PQ4, 1U5/1Q4/2Q4/3Q4/4Q4/5R4 | E | 1781 | AGU,AUM,AUQ | M | +/- | Left/gauche | 08/00 ▸ 12/10 | 6X0959455A | **696042** |
| 1.8 20V,1.8 i Turbo 20V 1U2/1Q4/1QX/2Q4/2QX 3Q4/3QX/4Q4/4QX/5Q4/5R4/PQ4, 1U5/1Q4/1QX/2Q4 2QX/3Q4/3QX/4Q4/4QX/5R4 | E | 1781 | AGU,ARX,ARZ,AUM,AUQ | M | + | Right/Droite | 08/00 ▸ 12/10 | 1J0959455M | **698373** |
| 1.8 i Turbo 20V 1U2/1QX/2QX/3QX/4QX 1U5/1QX/2QX/3QX/4Q4/4QX | E | 1781 | ARX | M | | | 08/00 ▸ 05/06 | 6X0959455A | **696042** |
| 1.8 20V,1.8 i Turbo 20V 1U2/1Q4/1QX/2Q4/2QX 3Q4/3QX/4Q4/4QX/5Q4/5R4/PQ4, 1U5/1Q4/1QX/2Q4 2QX/3Q4/3QX/4Q4/4QX/5R4 | E | 1781 | AGU,ARX,AUM,AUQ | M | | | 08/00 ▸ 12/10 | 6E0959455A | |
| 1.8 i Turbo 20V 1U2/1Q3/2Q3/3Q3/4Q3 1U5/1Q3/2Q3/3Q3/4Q3 | E | 1781 | AGU,ARX,AUM | A | +/- | Left/gauche | 08/00 ▸ 01/06 | 6X0959455A | **696042** |
| 1.8 i Turbo 20V 1U2/1Q3/2Q3/3Q3/4Q3 1U5/1Q3/2Q3/3Q3/4Q3 | E | 1781 | AGU,ARX,AUM | A | + | Right/Droite | 08/00 ▸ 01/06 | 1J0959455M | **698373** |
| 1.8 i Turbo 20V 1U2/1Q3/2Q3/3Q3/4Q3 1U5/1Q3/2Q3/3Q3/4Q3 | E | 1781 | AGU | A | | | 08/00 ▸ 01/06 | 6E0959455A | |
| 2.0 i 1U2/1N4/1T4/2N4/2T4/3N4/3T4, 1U5/1N4/1T4/1TX 2N4/2T4/2TX/3N4/3T4/3TX | E | 1984 | AEG,APK,AQY,AZH,AZJ | M | +/- | | 08/00 ▸ 05/07 | 6X0959455A | **696042** |
| 2.0 i 1U2/1N4/1T4/2N4/2T4/3N4/3T4, 1U5/1N4/1T4/1TX 2N4/2T4/2TX/3N4/3T4/3TX | E | 1984 | AEG,APK,AQY,AZH,AZJ | M | + | Right/Droite | 08/00 ▸ 01/06 | 1J0959455M | **698373** |
| 2.0 i 1U53N4, 1U2/1N4/2M4/3M4/3N4 | E | 1984 | APK | M | - | Left/gauche | 08/00 ▸ 05/07 | 6X0959455A | **696042** |
| 2.0 i 1U2/1N4/1T4/2M4/2N4/2T4/3M4/3N4/3T4, 1U5/1N4 1T4/1TX/2N4/2T4/2TX/3N4/3T4/3TX | E | 1984 | AEG,APK,AQY,AZJ | M | | | 08/00 ▸ 05/07 | 6E0959455A | |
| 2.0 i 1U2/1N3/1T3/2N3/2T3/3N3/3T3, 1U5/1N3/1T3/2N3 2T3/3N3/3T3 | E | 1984 | AEG,APK,AQY,AZJ | A | +/- | | 08/00 ▸ 05/07 | 6X0959455A | **696042** |
| 2.0 i 1U2/1N3/1T3/2N3/2T3/3N3/3T3, 1U5/1N3/1T3/2N3 2T3/3N3/3T3 | E | 1984 | AEG,APK,AQY,AZJ | A | + | Right/Droite | 08/00 ▸ 09/04 | 1J0959455M | **698373** |
| 2.0 i 1U22N3, 1U52N3 | E | 1984 | APK | A | - | | 08/00 ▸ 09/04 | 6X0959455A | **696042** |
| 2.0 i 1U2/1N3/1T3/2N3/2T3/3N3/3T3, 1U5/1N3/1T3/2N3 2T3/3N3/3T3 | E | 1984 | AEG,APK,AQY,AZJ | A | | | 08/00 ▸ 05/07 | 6E0959455A | |
| 1.9 D,1.9 TDi 1U2/164/174/184/264 274/284/295/374/384/395/474/484/495/P84, 1U5 15Y/164/174/184/25Y/264/274/27X/284/295/35Y 374/37X/384/394/395/484/495 | D | 1896 | AGR,AHF,ALH,AQM,ASV,ASZ,ATD | M | +/- | | 08/00 ▸ 12/10 | 6X0959455A | **696042** |
| 1.9 TDi 1U5/284/384/484 | D | 1896 | AHF | M | +/- | | 08/00 ▸ 09/04 | 1J0959455M | **698373** |
| 1.9 D,1.9 TDi 1U2/164/174/184/264 274/284/295/374/384/395/474/484/495/P84, 1U5 15Y/164/174/184/25Y/264/274/27X/284/295/35Y 374/37X/384/394/395/484/495 | D | 1896 | AGR,AHF,ALH,AQM,ASV,ASZ,ATD | M | + | Right/Droite | 08/00 ▸ 12/10 | 1J0959455M | **698373** |
| 1.9 TDi 1U2/284/484/P84 | D | 1896 | AHF | M | - | | 08/00 ▸ 09/04 | 1J0959455M | **698373** |
| 1.9 TDi 1U2/174/274/374/474 | D | 1896 | ALH | M | - | | 08/00 ▸ 03/10 | 6X0959455A | **696042** |
| 1.9 D,1.9 TDi 1U2/164/174/184/264 274/284/295/374/384/395/474/484/495/P84, 1U5 15Y/164/174/184/25Y/264/274/27X/284/295/35Y 374/37X/384/394/395/484/495 | D | 1896 | AGR,AHF,ALH,AQM,ASV,ASZ,ATD | M | | | 08/00 ▸ 12/10 | 6E0959455A | |
| 1.9 TDi 1U2/373, 1U5/173/273 | D | 1896 | ALH | A | +/- | | 08/00 ▸ 12/07 | 6X0959455A | **696042** |
| 1.9 TDi 1U2/173/273/373/473 1U5/173/273/373 | D | 1896 | ALH | A | + | Right/Droite | 08/00 ▸ 12/07 | 1J0959455M | **698373** |
| 1.9 TDi 1U5373, 1U2/173/273 473 | D | 1896 | ALH | A | - | | 08/00 ▸ 12/07 | 6X0959455A | **696042** |

# SKODA (.../...)

## OCTAVIA (2000>2004) (.../...)

| | | | CC | | | AC | | | OE | Valeo | |
|---|---|---|---|---|---|---|---|---|---|---|---|
| 1.9 TDi | 1U2/173/273/373/473<br>1U5/173/273/373 | D | 1896 | ALH | A | | | 08/00 ▸ 12/07 | 6E0959455A | | |

## OCTAVIA (2004>2008)

| | | | | | | | | | | | |
|---|---|---|---|---|---|---|---|---|---|---|---|
| 1.4 i 16V | 1Z3/1B4/2B4, 1Z5/1B4<br>2B4 | E | 1390 | BCA | M | + | Right/Droite | 05/04 ▸ 05/06 | 1K0959455DG | | |
| 1.4 i 16V | 1Z3/1B4/2B4, 1Z5/1B4<br>2B4 | E | 1390 | BCA | M | + | Left/gauche | 05/04 ▸ 05/06 | 1K0959455P | | |
| 1.6 i | 1Z3/1G4/2G4/3G4, 1Z5/1G4/2G4/3G4 | E | 1595 | BGU | M | + | Right/Droite | 05/04 ▸ 05/05 | 1K0959455DG | | |
| 1.6 i | 1Z3/1G4/2G4/3G4, 1Z5/1G4/2G4/3G4 | E | 1595 | BGU | M | + | Left/gauche | 05/04 ▸ 05/05 | 1K0959455P | | |
| 1.6 i | 1Z3/1GC/2GC/3GC, 1Z5/1GC/2GC/3GC | E | 1595 | BGU | A | + | Right/Droite | 08/04 ▸ | 1K0959455DG | | |
| 1.6 i | 1Z3/1GC/2GC/3GC, 1Z5/1GC/2GC/3GC | E | 1595 | BGU | A | + | Left/gauche | 08/04 ▸ | 1K0959455P | | |
| 1.6 FSi 16V | 1Z3/1K4/2K4/3K4, 1Z5<br>1K4/2K4/3K4 | E | 1598 | BLF | M | + | Right/Droite | 05/04 ▸ 10/08 | 1K0959455DG | | |
| 1.6 FSi 16V | 1Z3/1K4/2K4/3K4, 1Z5<br>1K4/2K4/3K4 | E | 1598 | BLF | M | + | Left/gauche | 05/04 ▸ 10/08 | 1K0959455P | | |
| 1.6 FSi 16V | 1Z3/1KC/2KC/3KC, 1Z5<br>1KC/2KC/3KC | E | 1598 | BLF | A | + | Right/Droite | 08/04 ▸ 10/08 | 1K0959455DG | | |
| 1.6 FSi 16V | 1Z3/1KC/2KC/3KC, 1Z5<br>1KC/2KC/3KC | E | 1598 | BLF | A | + | Left/gauche | 08/04 ▸ 10/08 | 1K0959455P | | |
| 1.8 TFSi 16V | 1Z3/2Q5/3Q5/4Q5, 1Z5<br>2Q5/3Q5/4Q5 | E | 1798 | BZB | M | +/- | Left/gauche | 06/07 ▸ 10/08 | 1K0959455DL | | |
| 1.8 TFSi 16V | 1Z3/2Q5/3Q5/4Q5, 1Z5<br>2Q5/3Q5/4Q5 | E | 1798 | BZB | M | | | 06/07 ▸ 10/08 | 1K0959455DH | | |
| 2.0 FSi 16V,2.0 TFSi 16V | 1Z3/2N5/3N5/5R5, 1Z5<br>2N5/3N5/5R5/ANY | E | 1984 | BLR,BLX,BLY,BWA | M | +/- | Right/Droite | 11/04 ▸ 10/08 | 1K0959455DH | | |
| 2.0 FSi 16V | 1Z3/2N5/3N5, 1Z5/2N5<br>3N5 | E | 1984 | BLR | M | +/- | Left/gauche | 11/04 ▸ 11/05 | 1K0959455P | | |
| 2.0 FSi 16V | 1Z3/2N5/3N5, 1Z5/2N5<br>3N5/ANY | E | 1984 | BLR,BLX,BLY | M | +/- | Right/Droite | 11/04 ▸ 11/05 | 1K0959455DG | | |
| 2.0 FSi 16V | 1Z3/2N5/3N5, 1Z5/2N5<br>3N5 | E | 1984 | BLR,BLY | M | +/- | | 11/04 ▸ 11/05 | 1K0959455Q | | |
| 2.0 FSi 16V | 1Z3/2N5/3N5, 1Z5/2N5<br>3N5 | E | 1984 | BLY | M | +/- | | 12/04 ▸ 11/05 | 1K0959455N | | |
| 2.0 TFSi 16V | 1Z35R5, 1Z55R5 | E | 1984 | BWA | M | +/- | Left/gauche | 10/05 ▸ 10/08 | 1K0959455DL | | |
| 2.0 FSi 16V | 1Z3/2N5/3N5, 1Z5/2N5<br>3N5 | E | 1984 | BLY | M | + | Left/gauche | 12/04 ▸ 11/05 | 1K0959455P | | |
| 2.0 FSi 16V | 1Z5ANY | E | 1984 | BLX | M | | Left/gauche | 11/04 ▸ 11/05 | 1K0959455P | | |
| 2.0 FSi 16V | 1Z3/2N5/3N5, 1Z5/2N5<br>3N5 | E | 1984 | BLR | M | | | 11/04 ▸ 11/05 | 1K0959455N | | |
| 2.0 FSi 16V | 1Z3/2NC/3NC, 1Z5/2NC<br>3NC | E | 1984 | BLR,BLY | A | +/- | Right/Droite | 11/04 ▸ 11/05 | 1K0959455DH | | |
| 2.0 FSi 16V | 1Z3/2NC/3NC | E | 1984 | BLY | A | +/- | Left/gauche | 11/04 ▸ 11/05 | 1K0959455N | | |
| 2.0 FSi 16V | 1Z3/2NC/3NC, 1Z5/2NC<br>3NC | E | 1984 | BLR | A | + | | 11/04 ▸ 11/05 | 1K0959455Q | | |
| 2.0 FSi 16V | 1Z3/2NC/3NC, 1Z5/2NC<br>3NC | E | 1984 | BLR | A | + | | 11/04 ▸ 11/05 | 1K0959455N | | |
| 2.0 FSi 16V | 1Z3/2NC/3NC, 1Z5/2NC<br>3NC | E | 1984 | BLR,BLY | A | - | Right/Droite | 11/04 ▸ 11/05 | 1K0959455DG | | |
| 2.0 FSi 16V | 1Z3/2NC/3NC, 1Z5/2NC<br>3NC | E | 1984 | BLR,BLY | A | | Left/gauche | 11/04 ▸ 11/05 | 1K0959455P | | |
| 1.9 TDi | 1Z3/164/264/364, 1Z5<br>164/264/364 | D | 1896 | BJB | M | +/- | Left/gauche | 05/04 ▸ 10/08 | 1K0959455P | | |
| 1.9 TDi | 1Z3/164/264/364, 1Z5<br>164/264/364 | D | 1896 | BJB | M | + | | 05/04 ▸ 10/08 | 1K0959455Q | | |
| 1.9 TDi | 1Z3/164/264/364, 1Z5<br>164/264/364 | D | 1896 | BJB | M | + | | 05/04 ▸ 10/08 | 1K0959455N | | |
| 1.9 TDi | 1Z3/154/254/354, 1Z5<br>154/254/354/A5Y | D | 1896 | BLS | M | + | | 05/06 ▸ 10/08 | 1K0959455P | | |
| 1.9 TDi | 1Z3/154/254/354, 1Z5<br>154/254/354/A5Y | D | 1896 | BLS | M | + | | 05/06 ▸ 10/08 | 1K0959455DG | | |
| 1.9 TDi | 1Z3/16C/36C, 1Z5/16C<br>26C/36C | D | 1896 | BKC | A | + | | 08/04 ▸ 02/06 | 1K0959455N | | |
| 1.9 TDi | 1Z3/16C/36C, 1Z5/16C<br>26C/36C | D | 1896 | BKC | A | + | | 08/04 ▸ 02/06 | 1K0959455Q | | |
| 1.9 TDi | 1Z3/15C/25C/35C, 1Z5<br>15C/25C/35C | D | 1896 | BLS | A | + | | 05/06 ▸ 10/08 | 1K0959455P | | |
| 1.9 TDi | 1Z3/15C/25C/35C, 1Z5<br>15C/25C/35C | D | 1896 | BLS | A | + | | 05/06 ▸ 10/08 | 1K0959455DG | | |

Fan Motor + Blades Moteur + hélice Lüftermotor + Lüfterrad Motorino + Ventola Ventilatormotor Fan motoru + Kanatlar
Moto-ventilador + Aspas Мотор вентилятора + лопасти вентилятора Ventilátor motor és lapát Motor sahary + vrtule Ventilator motor + Lame Μοτέρ ανεμιστήρων + Πτερωτές



• **New** Nouveau **Nuevo** Novo **Nuovo** Nieuw **Neu** Nowość **Yeni** Новый Νέο **Novy**

| Type Ctr. | | CC | | AC | | | | OE | Valeo | |
|---|---|---|---|---|---|---|---|---|---|---|

# SKODA (.../...)

## OCTAVIA (2004>2008) (.../...)

| | | | | | | | | | | |
|---|---|---|---|---|---|---|---|---|---|---|
| 1.9 TDi 1Z3/16C/36C, 1Z5/16C 26C/36C | D | 1896 | BKC | A | | Left/gauche | 08/04 ▸ 02/06 | 1K0959455P | | |
| 2.0 TDi,2.0 TDi 16V 1Z3/245/275/285/345 375/385/445/47C/485, 1Z5/245/275/285/345/375 385/445/475/485/A4Y/B4Y/C4Y | D | 1968 | AZV,BKD,BMM/F | M | +/- | Right/Droite | 05/04 ▸ 10/08 | 1K0959455DG | | |
| 2.0 TDi,2.0 TDi 16V 1Z3/245/285/345/385 445/485, 1Z5/245/285/345/385/445/485/A4Y/B4Y C4Y | D | 1968 | BKD,BMM/F | M | +/- | Left/gauche | 05/05 ▸ 10/08 | 1K0959455EA | | |
| 2.0 TDi 16V 1Z3/285/385, 1Z5/285 385 | D | 1968 | BKD | M | + | | 05/04 ▸ 10/08 | 1K0959455Q | | |
| 2.0 TDi,2.0 TDi 16V 1Z3/245/275/285/345 375/385/445/47C/485/595, 1Z5/245/275/285/345 375/385/445/475/485/595/A4Y/B4Y/C4Y 1Z-52095960 ▸ | D | 1968 | AZV,BKD,BMM/F,BMN | M | + | Left/gauche | 05/05 ▸ 10/08 | 1K0959455DL | | |
| 2.0 TDi 16V 1Z3/275/375/47C/595 1Z5/275/375/475/595 1Z-52095959 ▸ | D | 1968 | AZV,BMN | M | - | Left/gauche | 05/05 ▸ 10/08 | 1K0959455EA | | |
| 2.0 TDi 16V 1Z3595, 1Z5595 | D | 1968 | BMN | M | - | Right/Droite | 04/06 ▸ 10/08 | 1K0959455DG | | |
| 2.0 TDi 16V 1Z5/285/385 | D | 1968 | BKD | M | | Left/gauche | 05/04 ▸ 10/08 | 1K0959455P | | |
| 2.0 TDi,2.0 TDi 16V 1Z3/24C/27C/28C/34C 37C/38C/44C/475/48C, 1Z5/24C/27C/28C/34C/37C 38C/44C/47C/48C | D | 1968 | AZV,BKD,BMM/F | A | +/- | Right/Droite | 05/04 ▸ 10/08 | 1K0959455DG | | |
| 2.0 TDi,2.0 TDi 16V 1Z3/24C/28C/34C/38C 44C/48C, 1Z5/24C/28C/34C/38C/44C/48C | D | 1968 | BKD,BMM/F | A | +/- | Left/gauche | 05/05 ▸ 10/08 | 1K0959455EA | | |
| 2.0 TDi 16V 1Z3/27C/28C/37C/38C 1Z5/27C/28C/37C/38C | D | 1968 | AZV,BKD | A | + | | 08/04 ▸ 10/08 | 1K0959455Q | | |
| 2.0 TDi,2.0 TDi 16V 1Z3/24C/27C/28C/34C 37C/38C/44C/475/48C, 1Z5/24C/27C/28C/34C/37C 38C/44C/47C/48C | D | 1968 | AZV,BKD,BMM/F | A | + | Left/gauche | 05/05 ▸ 10/08 | 1K0959455DL | | |
| 2.0 TDi 16V 1Z3/27C/37C/475, 1Z5 27C/37C/47C 1Z-52095959 ▸ | D | 1968 | AZV | A | - | Left/gauche | 05/05 ▸ 10/08 | 1K0959455EA | | |
| 2.0 TDi 16V 1Z3/28C/38C, 1Z5/28C 38C | D | 1968 | BKD | A | | Left/gauche | 08/04 ▸ 10/08 | 1K0959455P | | |
| 2.0 TDi 16V 1Z3/275/285/375/385 47C/485, 1Z5/275/375/475/485 ▸ 1Z-5209559, 1Z-52095 959 | D | 1968 | AZV,BKD | M | - | Left/gauche | 05/04 ▸ 10/08 | 1K0959455P | | |
| 2.0 TDi 16V 1Z3/27C/37C/475/48C 1Z5/27C/37C/47C/48C ▸ 1Z-5209559, 1Z-52095 959 | D | 1968 | AZV,BKD | A | - | Left/gauche | 05/04 ▸ 05/05 | 1K0959455P | | |
| 2.0 TDi 16V 1Z3/275/285/375/385 47C/485, 1Z5/275/285/375/385/475/485 ▸ 1Z-52095959 | D | 1968 | AZV,BKD | M | + | Left/gauche | 05/04 ▸ 10/08 | 1K0959455N | | |
| 2.0 TDi,2.0 TDi 16V 1Z3/245/275/285/345 375/385/445/47C/485/595, 1Z5/245/275/285/345 375/385/445/475/485/595/A4Y/B4Y/C4Y ▸ 1Z-52095959 | D | 1968 | AZV,BKD,BMM/F,BMN | M | + | Right/Droite | 05/04 ▸ | 1K0959455DH | | |
| 2.0 TDi,2.0 TDi 16V 1Z3/24C/27C/28C/34C 37C/38C/44C/475/48C, 1Z5/24C/27C/28C/34C/37C 38C/44C/47C/48C ▸ 1Z-52095959 | D | 1968 | AZV,BKD,BMM/F | A | + | Right/Droite | 05/04 ▸ | 1K0959455DH | | |
| 2.0 TDi 16V 1Z3/27C/28C/37C/38C 475/48C, 1Z5/27C/28C/37C/38C/47C/48C | D | 1968 | AZV,BKD | A | + | Left/gauche | 05/04 ▸ 10/08 | 1K0959455N | | |

## ROOMSTER (2006>2010)

| | | | | | | | | | | |
|---|---|---|---|---|---|---|---|---|---|---|
| 1.2 i 12V 5J7/1E4/2E4/3E4/4E4 | E | 1198 | BME-E2,BME-E4 | M | +/- | | 05/06 ▸ 01/07 | 6Q0959455AD | | |
| 1.2 i 12V 5J7/1E4/2E4/3E4/4E4 | E | 1198 | BME-E2,BME-E4 | M | - | | 05/06 ▸ 01/07 | 6Q0959455AF | 696019 | |
| 1.4 i 16V 5J7/1G4/2G4/3G4/4G4 | E | 1390 | BXW-E2,BXW-E4 | M | | | 05/06 ▸ 03/10 | 6E0959455A | | |
| 1.4 i 16V 5J7/1G4/2G4/3G4/4G4 | E | 1390 | BXW-E2,BXW-E4 | M | | | 05/06 ▸ 03/10 | 6Q0959455AF | 696019 | |
| 1.6 i 16V 5J7/1K4/2K4/3K4/4K4 | E | 1598 | BTS-E2,BTS-E4 | M | + | | 05/06 ▸ 03/10 | 6Q0959455AD | | |
| 1.6 i 16V 5J7/1K4/2K4/3K4/4K4 | E | 1598 | BTS-E2,BTS-E4 | M | - | | 05/06 ▸ 03/10 | 6X0959455C | 696078 | |
| 1.6 i 16V 5J7/1K4/2K4/3K4/4K4 | E | 1598 | BTS-E2,BTS-E4 | M | - | | 05/06 ▸ 03/10 | 6Q0959455AF | 696019 | |
| 1.6 i 16V 5J7/1KC/2KC/3KC/4KC | E | 1598 | BTS-E2,BTS-E4 | A | + | | 11/06 ▸ 03/10 | 6Q0959455AD | | |
| 1.6 i 16V 5J7/1KC/2KC/3KC/4KC | E | 1598 | BTS-E4 | A | | | 11/06 ▸ 03/10 | 6X0959455C | 696078 | |
| 1.6 i 16V 5J7/1KC/2KC/3KC/4KC | E | 1598 | BTS-E2,BTS-E4 | A | | | 11/06 ▸ 03/10 | 6Q0959455AF | 696019 | |
| 1.9 TDi 5J7/164/264/364/464 | D | 1896 | AXR | M | +/- | | 03/06 ▸ 05/06 | 6Q0959455AD | | |

## SUPERB (2001>2008)

| | | | | | | | | | | |
|---|---|---|---|---|---|---|---|---|---|---|
| 1.8 i Turbo 20V 3U4/1K4/2K4/3K4 | E | 1781 | AWT | M | | | 12/01 ▸ 03/08 | 8D0959455P | | |
| 1.8 i Turbo 20V 3U4/1KB/2KB/3KB | E | 1781 | AWT | A | | | 01/04 ▸ 03/08 | 8D0959455P | | |

| Type Ctr. | | CC | | | AC | | | OE | Valeo | |
|---|---|---|---|---|---|---|---|---|---|---|
| **SKODA (.../...)** | | | | | | | | | | |
| **SUPERB (2001>2008) (.../...)** | | | | | | | | | | |
| 2.0 i 3U4/1M4/2M4/3M4 | E | 1984 | AZM | M | | | 12/01 ▸ 03/08 | 8D0959455P | | |
| 2.8 i V6 30V 3U4/1S4/2S4/3S4 | E | 2771 | AMX | M | | | 12/01 ▸ 03/08 | 8D0959455P | | |
| 2.8 i V6 30V 3U4/1SB/1TB/2SB/2TB 3SB/3TB | E | 2771 | AMX,BBG | A | | | 12/01 ▸ 03/08 | 8D0959455P | | |
| 1.9 TDi 3U4/124/224/324 | D | 1896 | AVB | M | | | 06/02 ▸ 10/05 | 8D0959455P | | |
| **SUPERB II (2008>)** | | | | | | | | | | |
| 1.4 TFSi 16V 3T4/1G5/2G5/3G5 | E | 1390 | CAXC | M | +/- | Left/gauche | 04/08 ▸ | 1K0959455DL | | |
| 1.4 TFSi 16V 3T4/1G5/2G5/3G5 | E | 1390 | CAXC | M | +/- | Left/gauche | 04/08 ▸ | 1K0959455EA | | |
| 1.8 TFSi 16V 3T4/1K5/2K5/3K5 | E | 1798 | BZB | M | +/- | Left/gauche | 03/08 ▸ 05/09 | 1K0959455DL | | |
| 1.9 TDi 3T4/124/224/324 | D | 1896 | BXE | M | +/- | Left/gauche | 03/08 ▸ | 1K0959455EA | | |
| **TOYOTA** | | | | | | | | | | |
| **YARIS (99>2005)** | | | | | | | | | | |
| 1.0 i 16V SCP10L | E | 998 | 1SZ-FE | M | + | | 03/99 ▸ 12/02 | 1636323020 | | |
| 1.3 i 16V NCP10L | E | 1299 | 2NZ-FE | M | +/- | | 09/99 ▸ 12/02 | 1636323020 | | |
| 1.3 i 16V NCP10L | E | 1299 | 2NZ-FE | A | +/- | | 09/99 ▸ 12/02 | 1636323020 | | |
| **VAUXHALL** | | | | | | | | | | |
| **ASTRA III (91>98)** | | | | | | | | | | |
| 1.4 i,1.4 i 16V | E | 1389 | 14NV,C14NZ,C14SE,X14NZ,X14XE | M | - | | 09/91 ▸ 03/01 | 22061461 | **696035** | |
| 1.6 i,1.6 i 16V | E | 1598 | 16LZ2,C16NZ,C16SE,X16SZ X16SZR,X16XEL | M | - | | 09/91 ▸ 03/01 | 22061461 | **696035** | |
| **ASTRA IV (98>)** | | | | | | | | | | |
| 1.2 i 16V | E | 1199 | X12XE | M | + | | 04/98 ▸ | 90570739 | **696173** | |
| 1.2 i 16V | E | 1199 | X12XE | M | + | | 04/98 ▸ 09/00 | 24431825 | **696173** | |
| 1.4 i 16V | E | 1389 | X14XE | M | +/- | | 04/98 ▸ | 90570739 | **696173** | |
| 1.4 i 16V | E | 1389 | X14XE | M | +/- | | 04/98 ▸ 02/04 | 24431825 | **696173** | |
| 1.6 i,1.6 i 16V | E | 1598 | X16SZR,X16XEL | M | +/- | | 04/98 ▸ | 90570739 | **696173** | |
| 1.6 i,1.6 i 16V | E | 1598 | X16SZR,X16XEL | M | +/- | | 04/98 ▸ 02/04 | 24431825 | **696173** | |
| 1.8 i 16V | E | 1796 | X18XE1 | M | +/- | | 04/98 ▸ | 90570739 | **696173** | |
| 1.8 i 16V | E | 1796 | X18XE1 | M | +/- | | 04/98 ▸ 09/00 | 24431825 | **696173** | |
| 2.0 i 16V | E | 1998 | X20XEV | M | + | | 04/98 ▸ 02/04 | 24431828 | **696280** | |
| 2.0 i 16V | E | 1998 | X20XEV | M | - | | 04/98 ▸ | 90570739 | **696173** | |
| 2.0 i 16V | E | 1998 | X20XEV | M | - | | 04/98 ▸ 02/04 | 24431825 | **696173** | |
| 2.2 i 16V | E | 2198 | Z22SE | M | + | | 07/00 ▸ 12/05 | 24431828 | **696280** | |
| 2.2 i 16V | E | 2198 | Z22SE | M | - | | 07/00 ▸ 12/05 | 24431825 | **696173** | |
| 2.2 i 16V | E | 2198 | Z22SE | A | + | | 07/00 ▸ 12/05 | 24431828 | **696280** | |
| 2.2 i 16V | E | 2198 | Z22SE | A | - | | 07/00 ▸ 12/05 | 24431825 | **696173** | |
| 1.7 CDTi | D | 1686 | Z17DTL | M | + | | 04/03 ▸ 12/05 | 24431828 | **696280** | |
| 1.7 D Turbo | D | 1699 | X17DTL | M | +/- | | 04/98 ▸ 02/04 | 24431828 | **696280** | |
| 2.0 Di 16V | D | 1995 | X20DTL,Y20DTL | M | +/- | | 04/98 ▸ 02/04 | 24431828 | **696280** | |
| **CAVALIER III (88>95)** | | | | | | | | | | |
| 1.4 JF19J, JF68J N100001 ▸ | E | 1389 | 14NV | M | - | | 07/91 ▸ 08/92 | 22061461 | **696035** | |
| 1.6 JF68B, JM19B, JM68B, JF19/B N100001 ▸ | E | 1598 | 16SV | M | - | | 07/91 ▸ 08/92 | 22061461 | **696035** | |
| 1.6 JM19B, JM68B N100001 ▸ | E | 1598 | 16SV | A | - | | 07/91 ▸ 08/92 | 22061461 | **696035** | |
| 1.8 JM19R, JM68R | E | 1796 | 18SV | M | - | | 07/91 ▸ 08/92 | 22061461 | **696035** | |
| **CORSA I (93>2000)** | | | | | | | | | | |
| 1.2 i | E | 1196 | C12NZ | M | - | | 04/93 ▸ 08/98 | 22061461 | **696035** | |
| 1.2 i ▸ S4276216 | E | 1196 | C12NZ | M | +/- | | 04/93 ▸ 1995 | 22061461 | **696035** | |
| 1.4 i | E | 1389 | C14NZ,C14SE | M | - | | 04/93 ▸ 08/98 | 22061461 | **696035** | |
| 1.5 D,1.5 D Turbo | D | 1488 | 15D,15TD,X15DT | M | +/- | | 04/93 ▸ 08/00 | 22061171 | **696281** | |
| 1.7 D | D | 1699 | 17D | M | +/- | | 02/96 ▸ 08/00 | 22061171 | **696281** | |
| **CORSA II (2000>2003)** | | | | | | | | | | |
| 1.0 i 12V | E | 973 | Z10XE | M | + | | 09/00 ▸ 07/01 | 9158007 | **696283** | |
| 1.2 i 16V | E | 1199 | Z12XE | M | + | | 09/00 ▸ 07/01 | 9158007 | **696283** | |
| 1.2 i 16V | E | 1199 | Z12XE | M | - | | 09/00 ▸ 08/03 | 24445190 | **696282** | |
| 1.4 i 16V | E | 1389 | Z14XE | M | + | | 09/00 ▸ 08/03 | 9158007 | **696283** | |

Fan Motor + Blades Moteur + hélice Lüftermotor + Lüfterrad Motorino + Ventola Ventilatormotor Fan motoru + Kanatlar
Moto-ventilador + Aspas Мотор вентилятора + лопасти вентилятора Ventilátor motor és lapát Motor sahary + vrtule Ventilator motor + Lame Μοτέρ ανεμιστήρων + Πτερωτές



• **New** Nouveau **Nuevo** Novo **Nuovo** Nieuw **Neu** Nowość **Yeni** Новый Νέο **Novy**

# VAUXHALL (.../...)

## CORSA II (2000>2003) (.../...)

| | | | | | | | | | | |
|---|---|---|---|---|---|---|---|---|---|---|
| 1.4 i 16V | E | 1389 | Z14XE | A | + | | 09/00 ▸ 08/03 | 9158007 | 696283 | |
| 1.4 i 16V | E | 1389 | Z14XE | A | - | | 09/00 ▸ 08/03 | 9129965 | 696284 | |
| 1.8 i 16V | E | 1796 | Z18XE | M | + | | 09/00 ▸ 08/03 | 9158007 | 696283 | |
| 1.7 Di 16V | D | 1686 | Y17DTL | M | + | | 09/00 ▸ 08/03 | 9129965 | 696284 | |
| 1.7 DTi 16V | D | 1686 | Y17DT | M | - | | 09/00 ▸ 08/03 | 9129965 | 696284 | |

## CORSA II (2003>2006)

| | | | | | | | | | | |
|---|---|---|---|---|---|---|---|---|---|---|
| 1.2 i 16V A.68E, AB08E, AB68E AC08E, AC68E, AE08E, AE68E, A.08/E | E | 1199 | Z12XE | M | - | | 09/03 ▸ 10/06 | 24445190 | 696282 | |
| 1.3 CDTI 16V AB08F, AB68F, AC08F AC68F, AE08F, AE68F, AS08F, AS68F, A.08/F | D | 1248 | Z13DT | M | +/- | | 09/03 ▸ 10/06 | 9129965 | 696284 | |
| 1.7 CDTI 16V AS08J, AS68J | D | 1686 | Z17DTH | M | +/- | | 09/03 ▸ 10/06 | 9129965 | 696284 | |

## NOVA

| | | | | | | | | | | |
|---|---|---|---|---|---|---|---|---|---|---|
| 1.6 i SF08P ▸ N4000035 | E | 1598 | C16SE,E16SE | M | | | 10/90 ▸ 01/92 | 22061461 | 696035 | |
| 1.5 D SF08F, SF68F | D | 1488 | 4EC1 | M | | | 09/91 ▸ 03/93 | 22061171 | 696281 | |

## SIGNUM (2003>2005)

| | | | | | | | | | | |
|---|---|---|---|---|---|---|---|---|---|---|
| 1.8 i 16V | E | 1796 | Z18XE | M | + | Right/Droite | 06/03 ▸ 09/05 | 24418347 | 696001 | |
| 1.8 i 16V | E | 1796 | Z18XE | M | + | Right/Droite | 06/03 ▸ 09/05 | 13114368 | 696026 | |
| 1.8 i 16V | E | 1796 | Z18XE | M | - | | 06/03 ▸ 09/05 | 24410988 | 698844 | |
| 2.0 i Turbo 16V | E | 1998 | Z20NET | M | +/- | | 06/03 ▸ 09/05 | 24418347 | 696001 | |
| 2.0 i Turbo 16V | E | 1998 | Z20NET | M | +/- | Left/gauche | 06/03 ▸ 09/05 | 13114368 | 696026 | |
| 2.2 DIG 16V | E | 2198 | Z22YH | M | +/- | | 06/03 ▸ 09/05 | 24410988 | 698844 | |
| 2.2 DIG 16V | E | 2198 | Z22YH | M | + | Right/Droite | 06/03 ▸ 09/05 | 13114368 | 696026 | |
| 2.2 DIG 16V | E | 2198 | Z22YH | M | + | Right/Droite | 06/03 ▸ 09/05 | 24418347 | 696001 | |
| 2.2 DIG 16V | E | 2198 | Z22YH | A | +/- | | 06/03 ▸ 09/05 | 24410988 | 698844 | |
| 2.2 DIG 16V | E | 2198 | Z22YH | A | + | Right/Droite | 06/03 ▸ 09/05 | 13114368 | 696026 | |
| 2.2 DIG 16V | E | 2198 | Z22YH | A | + | Right/Droite | 06/03 ▸ 09/05 | 24418347 | 696001 | |
| 3.2 i V6 24V | E | 3175 | Z32SE | M | +/- | Right/Droite | 06/03 ▸ 09/05 | 24418347 | 696001 | |
| 3.2 i V6 24V | E | 3175 | Z32SE | M | - | Left/gauche | 06/03 ▸ 09/05 | 13114368 | 696026 | |
| 3.2 i V6 24V | E | 3175 | Z32SE | A | - | Right/Droite | 06/03 ▸ 09/05 | 24418347 | 696001 | |
| 3.2 i V6 24V | E | 3175 | Z32SE | A | | Left/gauche | 06/03 ▸ 09/05 | 13114369 | 696027 | |
| 1.9 CDTI,1.9 CDTi 16V | D | 1910 | Z19DT,Z19DTH | M | +/- | Left/gauche | 04/04 ▸ 09/05 | 13114369 | 696027 | |
| 1.9 CDTI | D | 1910 | Z19DT | M | +/- | Right/Droite | 04/04 ▸ 09/05 | 13114368 | 696026 | |
| 1.9 CDTI ▸ 51000001 | D | 1910 | Z19DT | M | +/- | Left/gauche | 01/05 ▸ 09/05 | 24418347 | 696001 | |
| 1.9 CDTi 16V | D | 1910 | Z19DTH | A | +/- | Left/gauche | 04/04 ▸ 09/05 | 13114369 | 696027 | |
| 1.9 CDTi 16V | D | 1910 | Z19DTH | A | + | | 04/04 ▸ 09/05 | 13182322 | 696030 | |
| 1.9 CDTi 16V ▸ 41999999 | D | 1910 | Z19DTH | M | + | | 04/04 ▸ 12/04 | 13182322 | 696030 | |
| 2.0 DTi 16V | D | 1995 | Y20DTH | M | +/- | Right/Droite | 06/03 ▸ 09/05 | 13114368 | 696026 | |
| 2.0 DTi 16V | D | 1995 | Y20DTH | M | +/- | Left/gauche | 06/03 ▸ 09/05 | 13114369 | 696027 | |
| 2.2 DTi 16V | D | 2171 | Y22DTR | M | +/- | Right/Droite | 06/03 ▸ 09/05 | 13114368 | 696026 | |
| 2.2 DTi 16V | D | 2171 | Y22DTR | M | +/- | Left/gauche | 06/03 ▸ 09/05 | 13114369 | 696027 | |
| 2.2 DTi 16V | D | 2171 | Y22DTR | A | +/- | Right/Droite | 06/03 ▸ 09/05 | 13114368 | 696026 | |
| 2.2 DTi 16V | D | 2171 | Y22DTR | A | +/- | Left/gauche | 06/03 ▸ 09/05 | 13114369 | 696027 | |
| 3.0 CDTi V6 24V | D | 2958 | Y30DT | M | + | Right/Droite | 06/03 ▸ 09/05 | 24453598 | 696029 | |
| 3.0 CDTi V6 24V | D | 2958 | Y30DT | M | + | Left/gauche | 06/03 ▸ 09/05 | 24453597 | 696028 | |
| 3.0 CDTi V6 24V | D | 2958 | Y30DT | A | + | Left/gauche | 06/03 ▸ 09/05 | 24453597 | 696028 | |
| 3.0 CDTi V6 24V | D | 2958 | Y30DT | A | + | Right/Droite | 06/03 ▸ 09/05 | 24453598 | 696029 | |

## SIGNUM B (2005>)

| | | | | | | | | | | |
|---|---|---|---|---|---|---|---|---|---|---|
| 1.9 CDTI 16V | D | 1910 | Z19DTH | A | + | | 10/05 ▸ 11/08 | 13182322 | 696030 | |

## VECTRA (95>2002)

| | | | | | | | | | | |
|---|---|---|---|---|---|---|---|---|---|---|
| 1.8 i 16V JF35, JF68, JF19 ▸ W7087941, W1168892 | E | 1799 | X18XE | M | - | | 1998 ▸ 03/02 | 9118169 | 698344 | |
| 1.8 i 16V JF35, JF68, JF19 ▸ W5149157, W1168892 | E | 1799 | X18XE | A | - | | 1998 ▸ 03/02 | 9118169 | 698344 | |
| 1.8 i 16V JF35, JF68, JF19 ▸ W1168891, W7087940 | E | 1799 | X18XE | M | - | | 10/95 ▸ 1998 | 90541538 | | |
| 1.8 i 16V JF35, JF68, JF19 ▸ W7087940, W5149156 | E | 1799 | X18XE | A | - | | 10/95 ▸ 1998 | 90541538 | | |
| 2.0 i 16V JF35, JF68, JF19 ▸ W5149157, W7087941 | E | 1998 | X20XEV | M | - | | 1998 ▸ 08/00 | 9118169 | 698344 | |
| 2.0 i 16V JF35, JF68, JF19 ▸ W5149157, W1168892 | E | 1998 | X20XEV | A | - | | 1998 ▸ 08/00 | 9118169 | 698344 | |

# VAUXHALL (.../...)

## VECTRA (95>2002) (.../...)

| | | CC | | | AC | | | OE | Valeo | |
|---|---|---|---|---|---|---|---|---|---|---|
| 2.0 i 16V JF35, JF68, JF19 ▸ W5149156, W7087940 | E | 1998 | X20XEV | A | - | | 10/95 ▸ 1998 | 90541538 | | |
| 2.0 i 16V JF35, JF68, JF19 | E | 1998 | X20XEV | M | - | | 10/95 ▸ 1998 | 90541538 | | |

## VECTRA (2002>2005)

| | | | | | | | | | | |
|---|---|---|---|---|---|---|---|---|---|---|
| 1.8 i 16V | E | 1796 | Z18XE | M | +/- | | 04/02 ▸ 09/05 | 24410988 | **698844** | |
| 2.0 i Turbo 16V | E | 1998 | Z20NET | M | +/- | Left/gauche | 05/03 ▸ 09/05 | 13114368 | **696026** | |
| 2.0 i Turbo 16V | E | 1998 | Z20NET | M | +/- | Right/Droite | 05/03 ▸ 09/05 | 24418347 | **696001** | |
| 2.2 i 16V ▸ 41048790 | E | 2198 | Z22SE | M | + | Right/Droite | 04/02 ▸ 09/05 | 24418347 | **696001** | |
| 2.2 i 16V ▸ 31000001 | E | 2198 | Z22SE | M | + | Left/gauche | 2003 ▸ 09/05 | 13114368 | **696026** | |
| 2.2 i 16V ▸ 41048790 | E | 2198 | Z22SE | M | + | | 2004 ▸ 09/05 | 24410988 | **698844** | |
| 2.2 i 16V ▸ 31000001 | E | 2198 | Z22SE | A | + | Left/gauche | 2003 ▸ 09/05 | 13114368 | **696026** | |
| 2.2 i 16V ▸ 41048790 | E | 2198 | Z22SE | A | + | Right/Droite | 2004 ▸ 09/05 | 24418347 | **696001** | |
| 2.2 i 16V | E | 2198 | Z22SE | A | - | | 04/02 ▸ 09/05 | 24410988 | **698844** | |
| 2.2 i 16V ▸ 21999999 | E | 2198 | Z22SE | M | + | Right/Droite | 04/02 ▸ 07/02 | 24418346 | **696024** | |
| 2.2 i 16V ▸ 21999999 | E | 2198 | Z22SE | A | + | Right/Droite | 04/02 ▸ 07/02 | 24418346 | **696024** | |
| 3.2 i V6 24V ▸ 31000001 | E | 3175 | Z32SE | M | +/- | Left/gauche | 01/03 ▸ 09/05 | 13114368 | **696026** | |
| 3.2 i V6 24V | E | 3175 | Z32SE | M | - | Right/Droite | 04/02 ▸ 09/05 | 24418347 | **696001** | |
| 3.2 i V6 24V | E | 3175 | Z32SE | A | +/- | Left/gauche | 01/03 ▸ 09/05 | 13114368 | **696026** | |
| 3.2 i V6 24V ▸ 31000001 | E | 3175 | Z32SE | A | + | Left/gauche | 01/03 ▸ 09/05 | 13114369 | **696027** | |
| 3.2 i V6 24V | E | 3175 | Z32SE | A | - | Right/Droite | 04/02 ▸ 09/05 | 24418347 | **696001** | |
| 3.2 i V6 24V ▸ 21999999 | E | 3175 | Z32SE | M | +/- | Right/Droite | 04/02 ▸ 12/02 | 24418346 | **696024** | |
| 3.2 i V6 24V ▸ 21999999 | E | 3175 | Z32SE | A | +/- | Right/Droite | 04/02 ▸ 12/02 | 24418346 | **696024** | |
| 3.2 i V6 24V ▸ 21999999 | E | 3175 | Z32SE | A | + | Left/gauche | 04/02 ▸ 12/02 | 24419326 | **696025** | |
| 1.9 CDTI 16V | D | 1910 | Z19DTH | M | + | Right/Droite | 04/04 ▸ 09/05 | 13182322 | **696030** | |
| 1.9 CDTI 16V | D | 1910 | Z19DTH | M | + | Left/gauche | 04/04 ▸ 09/05 | 13114369 | **696027** | |
| 1.9 CDTI 16V | D | 1910 | Z19DTH | M | - | Left/gauche | 04/04 ▸ 09/05 | 13114368 | **696026** | |
| 1.9 CDTI 16V | D | 1910 | Z19DTH | A | + | | 04/04 ▸ 09/05 | 13167337 | **696080** | |
| 1.9 CDTI 16V | D | 1910 | Z19DTH | A | + | | 04/04 ▸ 09/05 | 13167336 | **696079** | |
| 1.9 CDTI 16V | D | 1910 | Z19DTH | A | - | Left/gauche | 04/04 ▸ 09/05 | 13114369 | **696027** | |
| 1.9 CDTI 16V | D | 1910 | Z19DTH | A | - | Right/Droite | 04/04 ▸ 09/05 | 13182322 | **696030** | |
| 2.0 DTI 16V | D | 1995 | Y20DTH | M | +/- | | 01/03 ▸ 09/05 | 13114368 | **696026** | |
| 2.0 DTI 16V ▸ 31000001 | D | 1995 | Y20DTH | M | +/- | Left/gauche | 01/03 ▸ 09/05 | 13114369 | **696027** | |
| 2.0 DTI 16V ▸ 21999999 | D | 1995 | Y20DTH | M | +/- | Left/gauche | 04/02 ▸ 12/03 | 24419326 | **696025** | |
| 2.0 DTI 16V ▸ 21999999 | D | 1995 | Y20DTH | M | +/- | Right/Droite | 04/02 ▸ 12/02 | 24418346 | **696024** | |
| 2.2 DTI 16V | D | 2171 | Y22DTR | M | +/- | | 01/03 ▸ 09/05 | 13114368 | **696026** | |
| 2.2 DTI 16V ▸ 31000001 | D | 2171 | Y22DTR | M | +/- | Left/gauche | 01/03 ▸ 09/05 | 13114369 | **696027** | |
| 2.2 DTI 16V ▸ 31000001 | D | 2171 | Y22DTR | A | +/- | Left/gauche | 01/03 ▸ 09/05 | 13114369 | **696027** | |
| 2.2 DTI 16V | D | 2171 | Y22DTR | A | +/- | | 01/03 ▸ 09/05 | 13114368 | **696026** | |
| 2.2 DTI 16V ▸ 21999999 | D | 2171 | Y22DTR | M | +/- | Left/gauche | 04/02 ▸ 12/02 | 24419326 | **696025** | |
| 2.2 DTI 16V ▸ 21999999 | D | 2171 | Y22DTR | M | +/- | Right/Droite | 04/02 ▸ 12/02 | 24418346 | **696024** | |
| 2.2 DTI 16V ▸ 21999999 | D | 2171 | Y22DTR | A | +/- | Right/Droite | 04/02 ▸ 12/02 | 24418346 | **696024** | |
| 2.2 DTI 16V ▸ 21999999 | D | 2171 | Y22DTR | A | +/- | Left/gauche | 04/02 ▸ 12/02 | 24419326 | **696025** | |
| 3.0 CDTi V6 24V | D | 2958 | Y30DT | M | + | | 07/03 ▸ 09/05 | 24453597 | **696028** | |
| 3.0 CDTi V6 24V | D | 2958 | Y30DT | M | + | | 07/03 ▸ 09/05 | 24453598 | **696029** | |
| 3.0 CDTi V6 24V | D | 2958 | Y30DT | A | + | | 07/03 ▸ 09/05 | 24453598 | **696029** | |
| 3.0 CDTi V6 24V | D | 2958 | Y30DT | A | + | | 07/03 ▸ 09/05 | 24453597 | **696028** | |

## VECTRA (2005>)

| | | | | | | | | | | |
|---|---|---|---|---|---|---|---|---|---|---|
| 1.6 i 16V | E | 1598 | Z16XE | M | | | 10/05 ▸ 02/09 | 24410988 | **698844** | |

Fan Motor + Blades Moteur + hélice Lüftermotor + Lüfterrad Motorino + Ventola Ventilatormotor Fan motoru + Kanatlar
Moto-ventilador + Aspas Мотор вентилятора + лопасти вентилятора Ventilátor motor és lapát Motor sahary + vrtule Ventilator motor + Lame Μοτέρ ανεμιστήρων + Πτερωτές



• **New** Nouveau **Nuevo** Novo **Nuovo** Nieuw **Neu** Nowość **Yeni** Новый Νέο **Novy**

| Type Ctr. | | CC | | | AC | | | OE | Valeo | |
|---|---|---|---|---|---|---|---|---|---|---|

# VAUXHALL (.../...)

## VECTRA (2005>) (.../...)

| | | | | | | | | | | |
|---|---|---|---|---|---|---|---|---|---|---|
| 1.8 i 16V | E | 1796 | Z18XE | M | +/- | | 10/05 ▸ 02/09 | 24410988 | 698844 | |
| 2.0 i Turbo 16V | E | 1998 | Z20NET | M | +/- | Right/Droite | 10/05 ▸ 02/09 | 24418347 | 696001 | |
| 2.0 i Turbo 16V | E | 1998 | Z20NET | M | +/- | Left/gauche | 10/05 ▸ 02/09 | 13114368 | 696026 | |
| 2.2 DGI 16V | E | 2198 | Z22YH | M | + | Right/Droite | 10/05 ▸ 02/09 | 24418347 | 696001 | |
| 2.2 DGI 16V | E | 2198 | Z22YH | M | + | Left/gauche | 10/05 ▸ 02/09 | 13114368 | 696026 | |
| 2.2 DGI 16V | E | 2198 | Z22YH | A | + | Right/Droite | 10/05 ▸ 02/09 | 24418347 | 696001 | |
| 2.2 DGI 16V | E | 2198 | Z22YH | A | + | Left/gauche | 10/05 ▸ 02/09 | 13114368 | 696026 | |
| 2.8 i V6 Turbo 24V | E | 2792 | Z28NEL,Z28NET | M | + | Left/gauche | 10/05 ▸ 08/06 | 13114369 | 696027 | |
| 2.8 i V6 Turbo 24V | E | 2792 | Z28NEL,Z28NET | M | + | Right/Droite | 10/05 ▸ 08/06 | 13182322 | 696030 | |
| 2.8 i V6 Turbo 24V | E | 2792 | Z28NEL | A | + | Right/Droite | 10/05 ▸ 08/06 | 13182322 | 696030 | |
| 2.8 i V6 Turbo 24V | E | 2792 | Z28NEL | A | + | Left/gauche | 10/05 ▸ 08/06 | 13114369 | 696027 | |
| 1.9 CDTI | D | 1910 | Z19DTL | M | +/- | Right/Droite | 10/05 ▸ 02/09 | 13114368 | 696026 | |
| 1.9 CDTI,1.9 CDTI 16V | D | 1910 | Z19DT,Z19DTH | M | + | | 10/05 ▸ 02/09 | 13114368 | 696026 | |
| 1.9 CDTI | D | 1910 | Z19DT | M | + | Left/gauche | 10/05 ▸ 02/09 | 24418347 | 696001 | |
| 1.9 CDTI 16V | D | 1910 | Z19DTH | M | - | | 10/05 ▸ 02/09 | 24418347 | 696001 | |
| 1.9 CDTI 16V | D | 1910 | Z19DTH | M | | Left/gauche | 10/05 ▸ 02/09 | 13114369 | 696027 | |
| 1.9 CDTI 16V | D | 1910 | Z19DTH | A | + | Right/Droite | 10/05 ▸ 02/09 | 13167337 | 696080 | |
| 1.9 CDTI 16V | D | 1910 | Z19DTH | A | + | Left/gauche | 10/05 ▸ 02/09 | 13167336 | 696079 | |
| 1.9 CDTI 16V | D | 1910 | Z19DTH | A | - | | 10/05 ▸ 02/09 | 13182322 | 696030 | |
| 1.9 CDTI 16V | D | 1910 | Z19DTH | A | - | | 10/05 ▸ 02/09 | 13114369 | 696027 | |
| 3.0 CDTI V6 24V | D | 2958 | Z30DT | M | + | Left/gauche | 10/05 ▸ 02/09 | 24453597 | 696028 | |
| 3.0 CDTI V6 24V | D | 2958 | Z30DT | M | + | Right/Droite | 10/05 ▸ 02/09 | 24453598 | 696029 | |
| 3.0 CDTI V6 24V | D | 2958 | Z30DT | A | + | Left/gauche | 10/05 ▸ 02/09 | 24453597 | 696028 | |
| 3.0 CDTI V6 24V | D | 2958 | Z30DT | A | + | Right/Droite | 10/05 ▸ 02/09 | 24453598 | 696029 | |

## ZAFIRA (99>2003)

| | | | | | | | | | | |
|---|---|---|---|---|---|---|---|---|---|---|
| 1.6 i GNV 16V | G | 1598 | Z16YNG | M | +/- | | 08/01 ▸ 06/03 | 24431825 | 696173 | |
| 1.6 i 16V F75L | E | 1598 | X16XEL | M | +/- | | 05/99 ▸ | 90570739 | 696173 | |
| 1.6 i 16V F75L | E | 1598 | C16SEL,X16XEL,Z16XE | M | +/- | | 05/99 ▸ 06/03 | 24431825 | 696173 | |
| 1.6 i 16V F75L | E | 1598 | X16XEL | M | - | | 05/99 ▸ | 24431825 | 696173 | |
| 1.8 i 16V F752 | E | 1796 | X18XE1 | M | +/- | | 05/99 ▸ | 90570739 | 696173 | |
| 1.8 i 16V F752 | E | 1796 | X18XE1,Z18XE | M | +/- | | 05/99 ▸ 06/03 | 24431825 | 696173 | |
| 1.8 i 16V F752 | E | 1796 | X18XE1 | M | - | | 05/99 ▸ | 24431825 | 696173 | |
| 1.8 i 16V F752 | E | 1796 | X18XE1 | A | +/- | | 05/99 ▸ | 90570739 | 696173 | |
| 1.8 i 16V F752 | E | 1796 | X18XE1,Z18XE | A | +/- | | 05/99 ▸ 06/03 | 24431825 | 696173 | |
| 1.8 i 16V F752 | E | 1796 | X18XE1 | A | - | | 05/99 ▸ | 24431825 | 696173 | |
| 2.0 Di 16V F75L | D | 1995 | X20DTL | M | +/- | | 05/99 ▸ 06/03 | 24431828 | 696280 | |

## ZAFIRA (2003>)

| | | | | | | | | | | |
|---|---|---|---|---|---|---|---|---|---|---|
| 1.6 i GNV 16V QG75I, QM75I | G | 1598 | Z16YNG | M | +/- | | 07/03 ▸ 06/05 | 24431825 | 696173 | |
| 1.6 i 16V QG75I, QM75I | E | 1598 | Z16XE | M | +/- | | 07/03 ▸ 06/05 | 24431825 | 696173 | |
| 1.8 i 16V QD75K, QX75K | E | 1796 | Z18XE | M | - | | 07/03 ▸ 06/05 | 24431825 | 696173 | |
| 1.8 i 16V QX75K | E | 1796 | Z18XE | A | - | | 07/03 ▸ 06/05 | 24431825 | 696173 | |
| 2.2 i 16V QD75P | E | 2198 | Z22SE | M | + | | 07/03 ▸ 06/05 | 24431828 | 696280 | |
| 2.2 i 16V QD75P | E | 2198 | Z22SE | M | - | | 07/03 ▸ 06/05 | 24431825 | 696173 | |
| 2.2 i 16V QD75P | E | 2198 | Z22SE | A | + | | 07/03 ▸ 06/05 | 24431828 | 696280 | |
| 2.2 i 16V QD75P | E | 2198 | Z22SE | A | - | | 07/03 ▸ 06/05 | 24431825 | 696173 | |
| 2.0 DTI 16V QG75M, QM75M, QX75M QD75/M | D | 1995 | X20DTH | M | +/- | | 07/03 ▸ | 24431828 | 696280 | |
| 2.0 DTI 16V QG75M, QM75M | D | 1995 | X20DTH | A | +/- | | 07/03 ▸ | 24431828 | 696280 | |
| 2.2 DTI 16V QD75P, QX75P | D | 2171 | Y22DTR | M | +/- | | 07/03 ▸ | 24431828 | 696280 | |
| 2.2 DTI 16V QD75P, QX75P | D | 2171 | Y22DTR | M | | | 07/03 ▸ | 24431828 | 696280 | |

# VAUXHALL

## COMBO (2001>2004)

| | | | | | | | | | | |
|---|---|---|---|---|---|---|---|---|---|---|
| 1.6 i | E | 1598 | Z16SE/E4 | M | + | | 10/01 ▸ 12/03 | 9158007 | 696283 | |
| 1.7 DTi 16V,1.7 Di 16V | D | 1686 | Y17DT,Y17DTL | M | +/- | | 10/01 ▸ 12/02 | 9129965 | 696284 | |

## COMBO (2004>)

| | | | | | | | | | | |
|---|---|---|---|---|---|---|---|---|---|---|
| 1.3 CDTi 16V | D | 1248 | Z13DT | M | +/- | | 07/04 ▸ | 9129965 | 696284 | |
| 1.7 CDTi 16V | D | 1686 | Z17DTH | M | +/- | | 07/04 ▸ | 9129965 | 696284 | |

## MOVANO

| | | | | | | | | | | |
|---|---|---|---|---|---|---|---|---|---|---|
| 1.9 Dti FD, JD | D | 1870 | F9Q.7.72 | M | + | Right/Droite | 08/00 ▸ 07/02 | 9161434 | 698424 | |
| 1.9 Dti FD, JD | D | 1870 | F9Q.7.70,F9Q.7.72 | M | - | Right/Droite | 08/00 ▸ 07/02 | 9111573 | 698412 | |
| 2.2 DTi 16V FD, JD, JD0N, UD, ED | D | 2188 | G9T.7.20,G9T.7.22,G9T.7.50 | M | + | | 09/00 ▸ 10/05 | 9161434 | 698424 | |
| 2.2 Dti 16V FD, JD, UD, ED | D | 2188 | G9T.7.20,G9T.7.22 | M | - | Right/Droite | 09/00 ▸ 09/03 | 9111573 | 698412 | |
| 2.2 DTi 16V JD0N | D | 2188 | G9T.7.50 | M | - | | 10/03 ▸ 10/05 | 93182745 | 698412 | |

# VAUXHALL (.../...)

## MOVANO (.../...)

| Type Ctr. | | CC | | AC | | 2+3 | OE | Valeo |
|---|---|---|---|---|---|---|---|---|
| 2.5 DTi 16V ED0U, ED0V, FD0M FD0U, FD0V, HD0U, JD0M, JD0U, UD0M, UD0U UD0V, ED0M | D | 2464 | G9U.7.20,G9U.7.24,G9U.7.54 | M | + | | 10/01 ▸ 10/06 | 9161434 | **698424** |
| 2.5 Dti 16V FD0M, JD0M, UD0M ED0M | D | 2464 | G9U.7.20 | M | - | Right/Droite | 10/01 ▸ 09/03 | 9111573 | **698412** |
| 2.5 DTi 16V ED0V, FD0U, FD0V HD0U, UD0U, UD0V, ED0U | D | 2464 | G9U.7.54 | M | - | | 10/03 ▸ 10/06 | 93182745 | **698412** |
| 2.5 CDTi 16V JD | D | 2464 | G9U.7.20 | A | + | | 10/03 ▸ | 9161434 | **698424** |
| 2.5 D FD, JD, UD, ED | D | 2499 | S8U.7.72 | M | + | Right/Droite | 10/98 ▸ 10/01 | 9161434 | **698424** |
| 2.8 Dti FD0C, JD0F, UD0C ED0C | D | 2800 | S9W.7.00,S9W.7.02 | M | + | Right/Droite | 10/98 ▸ 10/01 | 9161434 | **698424** |
| 2.8 Dti FD0C, JD0F, UD0C ED0C | D | 2800 | S9W.7.00,S9W.7.02 | M | - | Right/Droite | 10/98 ▸ 10/01 | 9111573 | **698412** |
| 3.0 CDTi 16V FD0S, HD0S, UD0S ED0S | D | 2953 | ZD3.2.02 | M | + | | 10/03 ▸ 01/06 | 93181678 | **698424** |

# VOLKSWAGEN

## BORA

| | | | | | | | | | |
|---|---|---|---|---|---|---|---|---|---|
| 1.4 i 16V 1J22 | E | 1390 | AHW,AKQ | M | +/- | | 09/98 ▸ | 1J0959455F | |
| 1.4 i 16V 1J2/0/1/2, 1J6/0/1/2 | E | 1390 | AHW,AKQ,APE,AXP | M | +/- | | 09/98 ▸ | 6X0959455A | **696042** |
| 1.4 i 16V 1J2/0/1/2, 1J6/0/1/2 | E | 1390 | AHW,AKQ,APE,AXP | M | +/- | | 09/98 ▸ 05/05 | 6X0959455F | **696042** |
| 1.4 i 16V 1J22 | E | 1390 | AHW,AKQ,APE | M | + | | 09/98 ▸ 05/00 | 1J0959455M | **698373** |
| 1.4 i 16V 1J2/0/1/2, 1J6/0/1/2 | E | 1390 | BCA | M | + | | 10/01 ▸ | 6X0959455A | **696042** |
| 1.4 i 16V 1J2/0/1/2, 1J6/0/1/2 | E | 1390 | BCA | M | + | | 10/01 ▸ 05/05 | 6X0959455F | **696042** |
| 1.4 i 16V 1J22 | E | 1390 | AHW,AKQ | M | - | | 09/98 ▸ | 1J0959455B | |
| 1.4 i 16V 1J2/0/1/2, 1J6/0/1/2 | E | 1390 | AHW,AKQ,APE,AXP,BCA | M | - | | 09/98 ▸ 05/05 | 6E0959455A | |
| 1.6 i,1.6 i 16V 1J2/0/2/5, 1J6/2/5 | E | 1595 | AKL,APF,ATN | M | +/- | | 09/98 ▸ | 1J0959455F | |
| 1.6 i 1J2/0/1/2/3/5, 1J6/0/1/2/3 | E | 1595 | AEH,AKL | M | +/- | | 09/98 ▸ 05/05 | 1J0959455M | **698373** |
| 1.6 i,1.6 i 16V 1J2/0/1/2/3/5, 1J6/0 1/2/3/5 | E | 1595 | AEH,AKL,APF,ATN,AUS,AZD | M | +/- | | 09/98 ▸ | 6X0959455A | **696042** |
| 1.6 i,1.6 i 16V 1J2/0/1/2/3/5, 1J6/0 1/2/3/5 | E | 1595 | AEH,AKL,APF,ATN,AUS,AZD | M | +/- | | 09/98 ▸ 05/05 | 6X0959455F | **696042** |
| 1.6 i,1.6 i 16V 1J2/0/1/2/3/5, 1J6/0 1/2/3/5 | E | 1595 | AKL,APF,ATN,BFQ | M | + | | 09/98 ▸ 05/05 | 1J0959455M | **698373** |
| 1.6 FSI 16V,1.6 i 1.6 i 16V 1J2/0/1/2/3, 1J6/0/1 2/3 | E | 1595 | BAD,BCB,BFQ | M | + | | 08/01 ▸ 05/05 | 6X0959455F | **696042** |
| 1.6 FSI 16V,1.6 i 1.6 i 16V 1J2/0/1/2/3, 1J6/0/1 2/3 | E | 1595 | BAD,BCB,BFQ | M | + | | 08/01 ▸ | 6X0959455A | **696042** |
| 1.6 i,1.6 i 16V 1J2/0/2/5, 1J6/2/5 | E | 1595 | AKL,APF,ATN | M | - | | 09/98 ▸ | 1J0959455B | |
| 1.6 FSI 16V,1.6 i 1.6 i 16V 1J2/0/1/2/3/5, 1J6/0 1/2/3/5 | E | 1595 | AEH,AKL,APF,ATN,AUS,AZD,BAD BCB,BFQ | M | - | | 09/98 ▸ 05/05 | 6E0959455A | |
| 1.6 i 1J2/2/5, 1J6/2/5 | E | 1595 | AEH,AKL,APF | A | +/- | | 09/98 ▸ | 1J0959455F | |
| 1.6 i 1J2/0/1/2/3/5, 1J6/0/1/2/3/5 | E | 1595 | AEH,AKL,AVU | A | +/- | | 09/98 ▸ 05/05 | 1J0959455M | **698373** |
| 1.6 i 1J2/0/1/2/3/5, 1J6/0/1/2/3/5 | E | 1595 | AEH,AKL,APF,AVU | A | +/- | | 09/98 ▸ 05/05 | 6X0959455F | **696042** |
| 1.6 i 1J2/0/1/2/3/5, 1J6/0/1/2/3/5 | E | 1595 | AEH,AKL,APF,AVU | A | +/- | | 09/98 ▸ | 6X0959455A | **696042** |
| 1.6 i 1J2/0/1/2/3, 1J6/0/1/2/3/5 | E | 1595 | AKL,APF,BFQ | A | + | | 05/99 ▸ 05/05 | 1J0959455M | **698373** |
| 1.6 i 1J2/0/1/2/3, 1J6/0/1/2/3 | E | 1595 | BFQ | A | + | | 05/02 ▸ 05/05 | 6X0959455F | **696042** |
| 1.6 i 1J2/0/1/2/3, 1J6/0/1/2/3 | E | 1595 | BFQ | A | + | | 05/02 ▸ | 6X0959455A | **696042** |
| 1.6 i 1J2/0/1/2/3/5, 1J6/0/1/2/3/5 | E | 1595 | AEH,AKL,APF,AVU,BFQ | A | - | | 09/98 ▸ 05/05 | 6E0959455A | |
| 1.6 i 1J2/2/5, 1J6/2/5 | E | 1595 | AEH,AKL,APF | A | - | | 09/98 ▸ | 1J0959455B | |
| 1.8 i 20V 1J2/2, 1J6/2/5 | E | 1781 | AGN | M | +/- | | 02/99 ▸ | 1J0959455F | |
| 1.8 i 20V,1.8 i Turbo 20V 1J2/2/3, 1J6/2/3/5 | E | 1781 | AGN,AGU,AUM,AUQ | M | +/- | | 02/99 ▸ 05/05 | 6X0959455F | **696042** |
| 1.8 i 20V,1.8 i Turbo 20V 1J2/2/3, 1J6/2/3/5 | E | 1781 | AGN,AGU,AUM,AUQ | M | +/- | | 02/99 ▸ | 6X0959455A | **696042** |
| 1.8 i 20V 1J6/2/5 | E | 1781 | AGN | M | +/- | | 05/99 ▸ 05/00 | 1J0959455M | **698373** |
| 1.8 i 20V 1J2/0/1/2/3/5, 1J6/0 1/2/3 | E | 1781 | AGN | M | + | | 02/99 ▸ 10/00 | 6X0959455A | **696042** |
| 1.8 i 20V 1J2/0/1/2/3/5, 1J6/0 1/2/3 | E | 1781 | AGN | M | + | | 02/99 ▸ 10/00 | 6X0959455F | **696042** |
| 1.8 i Turbo 20V 1J2/2/3, 1J6/2/3 | E | 1781 | AGU,AUM | M | + | | 09/00 ▸ 05/05 | 1J0959455M | **698373** |
| 1.8 i 20V 1J22 | E | 1781 | AGN | M | - | | 02/99 ▸ | 1J0959455B | |
| 1.8 i Turbo 20V 1J2/2/3, 1J6/2/3 | E | 1781 | AGU,AUM,AUQ | M | - | | 09/00 ▸ 05/05 | 6E0959455A | |
| 1.8 i Turbo 20V 1J2/2/3, 1J6/2/3 | E | 1781 | AGU,ARX,AUM | A | +/- | | 05/00 ▸ 05/05 | 6X0959455F | **696042** |
| 1.8 i Turbo 20V 1J2/2/3, 1J6/2/3 | E | 1781 | AGU,ARX,AUM | A | +/- | | 05/00 ▸ | 6X0959455A | **696042** |
| 1.8 i 20V 1J2/0/1/2/3/5, 1J6/0 1/2/3/5 | E | 1781 | AGN | A | + | | 02/99 ▸ 10/00 | 6X0959455A | **696042** |
| 1.8 i 20V 1J2/0/1/2/3/5, 1J6/0 1/2/3/5 | E | 1781 | AGN | A | + | | 02/99 ▸ 10/00 | 6X0959455F | **696042** |
| 1.8 i Turbo 20V 1J2/2/3, 1J6/2/3 | E | 1781 | AGU,ARX,AUM | A | + | | 05/00 ▸ 05/05 | 1J0959455M | **698373** |

Fan Motor + Blades Moteur + hélice Lüftermotor + Lüfterrad Motorino + Ventola Ventilatormotor Fan motoru + Kanatlar
Moto-ventilador + Aspas Мотор вентилятора + лопасти вентилятора Ventilátor motor és lapát Motor sahary + vrtule Ventilator motor + Lame Μοτέρ ανεμιστήρων + Πτερωτές



• **New** Nouveau **Nuevo** Novo **Nuovo** Nieuw **Neu** Nowość **Yeni** Новый Νέο **Novy**

# VOLKSWAGEN (.../...)

## BORA (.../...)

| | | | CC | | AC | | | OE | Valeo | |
|---|---|---|---|---|---|---|---|---|---|---|
| 1.8 i Turbo 20V | 1J2/2/3, 1J6/2/3 | E | 1781 | AGU,ARX,AUM | A | - | | 05/00 ▸ 05/05 | 6E0959455A | | |
| 2.0 i | 1J2/0/1/2/3/5, 1J6/0/1/2/3 | E | 1984 | APK,AQY,AZH,AZJ | M | +/- | | 09/98 ▸ 05/05 | 1J0959455M | 698373 | |
| 2.0 i | 1J2/2/5, 1J6/0/2/5 | E | 1984 | APK,AQY,AZH | M | +/- | | 09/98 ▸ | 1J0959455F | | |
| 2.0 i | 1J2/0/1/2/3/5, 1J6/0/1/2/3/5 | E | 1984 | APK,AQY,AZH | M | +/- | | 09/98 ▸ | 6X0959455A | 696042 | |
| 2.0 i | 1J2/0/1/2/3/5, 1J6/0/1/2/3/5 | E | 1984 | APK,AQY,AZH | M | +/- | | 09/98 ▸ 05/05 | 6X0959455F | 696042 | |
| 2.0 i | 1J6/2/5 | E | 1984 | APK,AQY | M | + | | 05/99 ▸ 05/00 | 1J0959455M | 698373 | |
| 2.0 i | 1J2/0/1/2/3, 1J6/0/1/2/3 | E | 1984 | AZJ | M | + | | 05/01 ▸ 05/05 | 6X0959455F | 696042 | |
| 2.0 i | 1J2/0/1/2/3, 1J6/0/1/2/3 | E | 1984 | AZJ | M | + | | 05/01 ▸ | 6X0959455A | 696042 | |
| 2.0 i | 1J2/2/5, 1J6/2/5 | E | 1984 | APK,AQY | M | - | | 09/98 ▸ | 1J0959455B | | |
| 2.0 i | 1J2/0/1/2/3/5, 1J6/0/1/2/3/5 | E | 1984 | APK,AQY,AZH,AZJ | M | - | | 09/98 ▸ 05/05 | 6E0959455A | | |
| 2.0 i | 1J2/0/1/2/3/5, 1J6/0/1/2/3/5 | E | 1984 | APK,AQY,AZH | A | +/- | | 09/98 ▸ 05/05 | 6X0959455F | 696042 | |
| 2.0 i | 1J2/0/1/2/3/5, 1J6/0/1/2/3/5 | E | 1984 | APK,AQY,AZH | A | +/- | | 09/98 ▸ | 6X0959455A | 696042 | |
| 2.0 i | 1J2/2/5, 1J6/2/5 | E | 1984 | APK,AQY | A | +/- | | 09/98 ▸ | 1J0959455F | | |
| 2.0 i | 1J2/0/1/2/3/5, 1J6/0/1/2/3 | E | 1984 | APK,AQY,AZH,AZJ | A | +/- | | 09/98 ▸ 05/05 | 1J0959455M | 698373 | |
| 2.0 i | 1J6/2/5 | E | 1984 | APK,AQY | A | + | | 05/99 ▸ 05/00 | 1J0959455M | 698373 | |
| 2.0 i | 1J2/0/1/2/3, 1J6/0/1/2/3 | E | 1984 | AZJ | A | + | | 05/01 ▸ | 6X0959455A | 696042 | |
| 2.0 i | 1J2/0/1/2/3, 1J6/0/1/2/3 | E | 1984 | AZJ | A | + | | 05/01 ▸ 05/05 | 6X0959455F | 696042 | |
| 2.0 i | 1J2/0/1/2/3/5, 1J6/0/1/2/3/5 | E | 1984 | APK,AQY,AZH,AZJ | A | - | | 09/98 ▸ 05/05 | 6E0959455A | | |
| 2.0 i | 1J2/2/5, 1J6/2/5 | E | 1984 | APK,AQY | A | - | | 09/98 ▸ | 1J0959455B | | |
| 2.3 i V5 20V | 1J2/5, 1J6/2/5 | E | 2324 | AGZ | M | +/- | | 09/98 ▸ | 1J0959455F | | |
| 2.3 i V5 20V | 1J2/5, 1J6/2/5 | E | 2324 | AGZ | M | +/- | | 09/98 ▸ 02/01 | 6X0959455F | 696042 | |
| 2.3 i V5 20V | 1J2/0/1/2/3/5, 1J6/0 1/2/3/5 | E | 2324 | AGZ | M | +/- | | 09/98 ▸ 02/01 | 1J0959455M | 698373 | |
| 2.3 i V5 20V | 1J2/5, 1J6/2/5 | E | 2324 | AGZ | M | +/- | | 09/98 ▸ | 6X0959455A | 696042 | |
| 2.3 i V5 20V | 1J2/0/1/2/3, 1J6/0/1 2/3 | E | 2324 | AGZ | M | | | 05/99 ▸ | 6X0959455A | 696042 | |
| 2.3 i V5 20V | 1J2/0/1/2/3, 1J6/0/1 2/3 | E | 2324 | AGZ | M | | | 05/99 ▸ 02/01 | 6X0959455F | 696042 | |
| 2.3 i V5 20V | 1J2/5, 1J6/2/5 | E | 2324 | AGZ | A | +/- | | 09/98 ▸ 02/01 | 6X0959455F | 696042 | |
| 2.3 i V5 20V | 1J2/0/1/2/3/5, 1J6/0 1/2/3/5 | E | 2324 | AGZ | A | +/- | | 09/98 ▸ 02/01 | 1J0959455M | 698373 | |
| 2.3 i V5 20V | 1J2/5, 1J6/2/5 | E | 2324 | AGZ | A | +/- | | 09/98 ▸ | 6X0959455A | 696042 | |
| 2.3 i V5 20V | 1J2/5, 1J6/2/5 | E | 2324 | AGZ | A | +/- | | 09/98 ▸ | 1J0959455F | | |
| 2.3 i V5 20V | 1J2/0/1/2/3/5, 1J6/0 1/2/3/5 | E | 2324 | AGZ | A | | | 01/99 ▸ | 6X0959455A | 696042 | |
| 2.3 i V5 20V | 1J2/0/1/2/3/5, 1J6/0 1/2/3/5 | E | 2324 | AGZ | A | | | 01/99 ▸ 02/01 | 6X0959455F | 696042 | |
| 1.9 SDi,1.9 TDi | 1J2/0/1/2/3/5, 1J6/0 1/2/3/5 | D | 1896 | AGP,AGR,AHF,AJM,ALH,AQM,ASV ASZ,ATD,AUY,AXR | M | +/- | | 09/98 ▸ | 6X0959455A | 696042 | |
| 1.9 SDi,1.9 TDi | 1J2/0/1/2/3/5, 1J6/0 1/2/3/5 | D | 1896 | AGP,AGR,AHF,AJM,ALH,AQM,ASV ASZ,ATD,AUY,AXR | M | +/- | | 09/98 ▸ 05/05 | 6X0959455F | 696042 | |
| 1.9 SDi,1.9 TDi | 1J2/0/2/5, 1J6/0/2/5 | D | 1896 | AGP,AGR,AHF,AJM,ALH,ATD,AXR | M | +/- | | 09/98 ▸ | 1J0959455F | | |
| 1.9 SDi,1.9 TDi | 1J2/0/1/2/3/5, 1J6/0 1/2/3/5 | D | 1896 | AGR,AHF,AJM,ALH,AQM,ASV,ASZ ATD,AXR | M | +/- | | 09/98 ▸ 05/05 | 1J0959455M | 698373 | |
| 1.9 TDi | 1J2/0/1/2/3/5, 1J6/0 1/2/3/5 | D | 1896 | AHF,AUY | M | + | | 09/98 ▸ 05/05 | 1J0959455M | 698373 | |
| 1.9 TDi | 1J2/0/1/2/3/5 | D | 1896 | AGR | M | + | | 09/98 ▸ 09/02 | 6X0959455F | 696042 | |
| 1.9 TDi | 1J2/0/1/2/3/5 | D | 1896 | AGR | M | + | | 09/98 ▸ | 6X0959455A | 696042 | |
| 1.9 SDi,1.9 TDi | 1J2/0/1/2/3/5, 1J6/0 1/2/3/5 | D | 1896 | AGP,AGR,AHF,AJM,ALH,AQM,ASV ASZ,ATD,AUY,AXR | M | - | | 09/98 ▸ 05/05 | 6E0959455A | | |
| 1.9 SDi,1.9 TDi | 1J2/0/2/5, 1J6/0/2/5 | D | 1896 | AGP,AGR,AHF,AJM,ALH,ATD,AXR | M | - | | 09/98 ▸ | 1J0959455B | | |
| 1.9 TDi | 1J2/0/1/2/3/5, 1J6/0 1/2/3/5 | D | 1896 | AGR,AHF,AJM,ALH,ASZ,ATD,AUY | A | +/- | | 09/98 ▸ 05/05 | 6X0959455F | 696042 | |
| 1.9 TDi | 1J2/0/2/5, 1J6/2/5 | D | 1896 | AGR,AHF,ALH | A | +/- | | 09/98 ▸ | 1J0959455F | | |
| 1.9 TDi | 1J2/0/1/2/3/5, 1J6/0 1/2/3/5 | D | 1896 | AGR,AHF,AJM,ALH,ASZ,ATD,AUY | A | +/- | | 09/98 ▸ | 6X0959455A | 696042 | |
| 1.9 TDi | 1J2/0/1/2/3/5, 1J6/0 1/2/3 | D | 1896 | AGR,AHF,ALH,ASZ,ATD | A | +/- | | 09/98 ▸ 05/05 | 1J0959455M | 698373 | |
| 1.9 TDi | 1J2/0/1/2/3/5 | D | 1896 | AGR | A | + | | 09/98 ▸ | 6X0959455A | 696042 | |
| 1.9 TDi | 1J2/0/1/2/3/5, 1J6/0 1/2/3/5 | D | 1896 | AHF,AUY | A | + | | 09/98 ▸ 05/03 | 1J0959455M | 698373 | |
| 1.9 TDi | 1J2/0/1/2/3/5 | D | 1896 | AGR | A | + | | 09/98 ▸ 04/02 | 6X0959455F | 696042 | |
| 1.9 TDi | 1J2/0/1/2/3/5, 1J6/0 1/2/3/5 | D | 1896 | AGR,AHF,AJM,ALH,ASZ,ATD,AUY | A | - | | 09/98 ▸ 05/05 | 6E0959455A | | |
| 1.9 TDi | 1J2/0/2/5, 1J6/2/5 | D | 1896 | AGR,AHF,ALH | A | - | | 09/98 ▸ | 1J0959455B | | |

## CORRADO

| | | | | | | | | | | |
|---|---|---|---|---|---|---|---|---|---|---|
| 1.8 i 16V | 5090 | E | 1781 | KR | M | + | | 04/89 ▸ 07/92 | 1H0959455D | 698367 |
| 1.8 i 16V,1.8 i G60 | 5090 | E | 1781 | KR,PG | M | - | | 09/88 ▸ 07/93 | 1H0959455D | 698367 |
| 1.8 i 16V | 5090 | E | 1781 | KR | M | - | | 04/89 ▸ 07/92 | 1H0959455 | 698370 |

# VOLKSWAGEN (.../...)

## CORRADO (.../...)

| Type Ctr. | | CC | | AC | | | | OE | Valeo |
|---|---|---|---|---|---|---|---|---|---|
| 1.8 i 16V 5090 | E | 1781 | KR | A | + | | 04/89 ▸ 07/91 | 1H0959455D | **698367** |
| 1.8 i 16V 5090 | E | 1781 | KR | A | - | | 04/89 ▸ 07/91 | 1H0959455 | **698370** |
| 1.8 i G60 5090 | E | 1781 | PG | A | - | | 08/89 ▸ 07/92 | 1H0959455D | **698367** |
| 2.0 i,2.0 i 16V 5090 | E | 1984 | 2E,9A,ADY | M | - | | 08/91 ▸ 07/95 | 1H0959455D | **698367** |
| 2.0 i 5090 | E | 1984 | 2E,ADY | M | - | | 04/93 ▸ 07/95 | 1H0959455 | **698370** |
| 2.0 i,2.0 i 16V 5090 | E | 1984 | 2E,9A,ADY | A | - | | 08/91 ▸ 07/95 | 1H0959455D | **698367** |
| 2.0 i 5090 | E | 1984 | 2E,ADY | A | - | | 08/93 ▸ 07/95 | 1H0959455 | **698370** |

## DERBY (81>84)

| | | | | | | | | | |
|---|---|---|---|---|---|---|---|---|---|
| 1.05 873/0/1/2 | E | 1043 | GL | M | - | | 10/81 ▸ 10/84 | 165959455L | **696031** |
| 1.05 873/0/1/2 | E | 1043 | GL | M | | | 10/81 ▸ 10/84 | 165959455T | **698368** |
| 1.1 873/0/1/2/A/B/C | E | 1093 | HB | M | - | | 10/81 ▸ 07/83 | 165959455L | **696031** |
| 1.1 873/0/1/2/A/B/C | E | 1093 | HB | M | | | 10/81 ▸ 07/83 | 165959455T | **698368** |
| 1.3 873/0/1/2 | E | 1272 | GK,HH,HK | M | - | | 10/81 ▸ 10/84 | 165959455L | **696031** |
| 1.3 873/0/1/2 | E | 1272 | GK,HH,HK | M | | | 10/81 ▸ 10/84 | 165959455T | **698368** |

## DERBY (99>)

| | | | | | | | | | |
|---|---|---|---|---|---|---|---|---|---|
| 1.8 i 6V20 | E | 1781 | ADD | M | - | | 03/04 ▸ | 6Q0959455AF | **696019** |
| 9N-4-200001 ▸ | | | | | | | | | |
| 2.0 i 6V20 | E | 1984 | ADC | M | - | | 03/04 ▸ | 6Q0959455AF | **696019** |
| 9N-4-200001 ▸ | | | | | | | | | |
| 2.0 i 6V20 | E | 1984 | ADC | A | - | | 03/04 ▸ | 6Q0959455AF | **696019** |

## EOS (2006>2010)

| | | | | | | | | | |
|---|---|---|---|---|---|---|---|---|---|
| 1.6 FSi 16V 1F73 | E | 1598 | BLF | M | + | Left/gauche | 05/06 ▸ 05/08 | 1K0959455EA | |
| 1.6 FSi 16V 1F73 | E | 1598 | BLF | M | + | Left/gauche | 05/06 ▸ | 1K0959455P | |
| 1.6 FSi 16V 1F73 | E | 1598 | BLF | M | + | Right/Droite | 05/06 ▸ 05/08 | 1K0959455DG | |
| 2.0 TFSi 16V 1F73 | E | 1984 | BWA | M | + | Left/gauche | 05/06 ▸ 05/07 | 1K0959455DL | |
| 2.0 TFSi 16V 1F73 | E | 1984 | BWA | M | + | Left/gauche | 05/06 ▸ | 1K0959455N | |
| 2.0 FSi 16V,2.0 TFSi 16V 1F73 | E | 1984 | BVY,BVZ,BWA | M | + | Right/Droite | 05/06 ▸ 05/08 | 1K0959455DH | |
| 2.0 FSi 16V 1F73 | E | 1984 | BVY,BVZ | M | + | Left/gauche | 05/06 ▸ | 1K0959455P | |
| 2.0 FSi 16V 1F73 | E | 1984 | BVY,BVZ | M | + | Left/gauche | 05/06 ▸ 05/08 | 1K0959455EA | |
| 2.0 TFSi 16V 1F73 | E | 1984 | BWA | A | + | Left/gauche | 05/06 ▸ | 1K0959455N | |
| 2.0 TFSi 16V 1F73 | E | 1984 | BWA | A | + | Right/Droite | 05/06 ▸ 11/10 | 1K0959455DH | |
| 2.0 TFSi 16V 1F73 | E | 1984 | BWA | A | + | Left/gauche | 05/06 ▸ 11/10 | 1K0959455DL | |
| 3.2 i V6 24V 1F73 | E | 3189 | BUB | A | + | Left/gauche | 05/06 ▸ 05/09 | 1K0959455DL | |
| 3.2 i V6 24V 1F73 | E | 3189 | BUB | A | + | Right/Droite | 05/06 ▸ 05/09 | 1K0959455DH | |
| 3.2 i V6 24V 1F73 | E | 3189 | BUB | A | + | Left/gauche | 05/06 ▸ | 1K0959455N | |
| 2.0 TDi 1F73 | D | 1968 | BMM/F | M | + | Left/gauche | 05/06 ▸ | 1K0959455P | |
| 2.0 TDi 1F73 | D | 1968 | BMM/F | M | + | Left/gauche | 05/06 ▸ 05/08 | 1K0959455EA | |
| 2.0 TDi 1F73 | D | 1968 | BMM/F | A | + | Left/gauche | 05/06 ▸ | 1K0959455N | |
| 2.0 TDi 1F73 | D | 1968 | BMM/F | A | + | Left/gauche | 05/06 ▸ 05/08 | 1K0959455DL | |

## FOX

| | | | | | | | | | |
|---|---|---|---|---|---|---|---|---|---|
| 1.2 i 5Z11 | E | 1198 | BMD | M | + | | 11/04 ▸ | 6Q0959455AD | |
| 1.4 i 5Z1/1/4 | E | 1390 | BKR | M | + | | 11/04 ▸ | 6Q0959455AD | |
| 1.4 i 5Z14 | E | 1390 | BKR | M | - | | 01/07 ▸ | 6X0959455C | **696078** |
| 1.4 i 5Z11 | E | 1390 | BKR | M | + | | 11/04 ▸ 02/06 | 6X0959455C | **696078** |

## GOLF II (83>91)

| | | | | | | | | | |
|---|---|---|---|---|---|---|---|---|---|
| 1.05 1920, 191/0/1/2, 1940, 193/0/1/2, 1G1/1/2/3 | E | 1043 | GN,HZ | M | - | | 08/83 ▸ 10/91 | 165959455L | **696031** |
| 1.05 1920, 191/0/1/2, 1940, 193/0/1/2, 1G1/1/2/3 | E | 1043 | GN,HZ | M | - | | 08/83 ▸ 10/91 | 165959455T | **698368** |
| 1.3 1920, 191/0/1/2/H/J, 193/0/1/2/G/H/J, 194/0 1, 1G1/0/1/2/3 | E | 1272 | GT,HK,MH,NU,NZ | M | - | | 08/83 ▸ 07/92 | 165959455L | **696031** |
| 1.3 1920, 191/0/1/2/H/J, 193/0/1/2/G/H/J, 194/0 1, 1G1/0/1/2/3 | E | 1272 | 2G,GT,HK,MH,NU,NZ | M | - | | 08/83 ▸ 07/92 | 165959455T | **698368** |
| 1.6 1920, 191/0/1/2/H/J, 193/0/1/2/G/H/J, 194/1 2, 1G1/1/2/3 | E | 1595 | EZ,EZA,HM,PN,RF | M | - | | 08/83 ▸ 07/92 | 165959455L | **696031** |
| 1.6 1920, 191/0/1/2/H/J, 193/0/1/2/G/H/J, 194/1 2, 1G1/1/2/3 | E | 1595 | ABN,EZ,EZA,HM,PN,RF | M | - | | 08/83 ▸ 07/92 | 165959455T | **698368** |
| 1.6 1920, 191/0/1/2, 193/0/1/2, 194/1/2 | E | 1595 | EZA | A | + | | 08/86 ▸ 07/88 | 165959455T | **698368** |
| 1.6 1920, 191/0/1/2, 193/0/1/2, 194/0/1/2, 1G1/1 2/3 | E | 1595 | EZ,EZA,HM,PN,RF | A | - | | 08/83 ▸ 07/92 | 165959455L | **696031** |
| 1.6 1920, 191/0/1/2, 193/0/1/2, 194/0/1/2, 1G1/1 2/3 | E | 1595 | EZ,HM,PN,RF | A | - | | 08/83 ▸ 07/92 | 165959455T | **698368** |
| 1.8 G60 1G17, 1G47 | E | 1763 | 1H | M | +/- | | 08/88 ▸ 12/89 | 1H0959455D | **698367** |
| 1.8,1.8 i,1.8 i 16V 168Z, 167/5, 191/0/1 2/3/G/H/J/N/S/T/U/V/W/Z, 192/0/1/2/3/T/U/V/Z 193/0/1/2/3/7/G/H/J/K/N/P/S/T/U/V/W/Z, 194 0/1/2/3/7/T/V/Z, 1G1/1/2/3/5 | E | 1781 | EV,GU,GX,GZ,HV,KR,PB,PF,PL,RH RP | M | - | | 08/83 ▸ 10/91 | 165959455L | **696031** |

Fan Motor + Blades Moteur + hélice Lüftermotor + Lüfterrad Motorino + Ventola Ventilatormotor Fan motoru + Kanatlar
Moto-ventilador + Aspas Мотор вентилятора + лопасти вентилятора Ventilátor motor és lapát Motor sahary + vrtule Ventilator motor + Lame Μοτέρ ανεμιστήρων + Πτερωτές



• **New** Nouveau **Nuevo** Novo **Nuovo** Nieuw **Neu** Nowość **Yeni** Новый Νέο **Novy**

# VOLKSWAGEN (.../...)

## GOLF II (83>91) (.../...)

| Type Ctr. | | CC | | AC | | | OE | Valeo |
|---|---|---|---|---|---|---|---|---|
| 1.8,1.8 i,1.8 i 16V 168Z, 167/5, 191/0/1 2/3/G/H/J/N/S/T/U/V/W/Z, 192/0/1/2/3/T/U/V/Z 193/0/1/2/3/7/G/H/J/N/P/S/T/U/V/W/Z, 194/0 1/2/3/7/T/V/Z, 1G1/1/2/3/5/J | E | 1781 | 1P,EV,GU,GX,GZ,HV,KR,PB,PF,PL RD,RH,RP,RV | M | - | | 08/83 ▸ 10/91 | 165959455T | 698368 |
| 1.8,1.8 G60 1G47, 1G1/5/7 | E | 1781 | PG | M | - | | 08/88 ▸ 07/91 | 1H0959455D | 698367 |
| 1.8,1.8 i 191/0/1/2/G/H/J, 192 0/1/2, 193/0/1/2/7/G/H/J/K, 194/0/1/2/7/G 1G1/1/2/3 | E | 1781 | GU,GX,HV,RH,RP | A | - | | 08/83 ▸ 10/91 | 165959455L | 696031 |
| 1.8,1.8 i 191/0/1/2/G/H/J, 192 0/1/2, 193/0/1/2/7/G/H/J, 194/0/1/2/7/G, 1G1 1/2/3/5 | E | 1781 | GU,GX,HV,RH,RP,RV | A | - | | 08/83 ▸ 10/91 | 165959455T | 698368 |
| 1.6 D 191/0/1/2, 192/0/1/2, 193/0/1/2, 194/0/2 1G1/1/2/3 | D | 1588 | JP | M | - | | 08/83 ▸ 10/91 | 165959455L | 696031 |
| 1.6 D,1.6 TD 1921, 191/0/1/2/T 1941, 193/0/1/2/7/T, 1G1/1/2/3/5 | D | 1588 | 1V,JP,JR,ME,MF,RA,SB | M | - | | 08/85 ▸ 07/92 | 165959455T | 698368 |
| 1.6 D 1920, 191/0/1/2, 193/0/1/2, 194/0/2, 1G1/1/2 3 | D | 1588 | JP | A | - | | 08/83 ▸ 10/91 | 165959455L | 696031 |
| 1.6 D 1G1/2/3 | D | 1588 | JP | A | - | | 08/89 ▸ 10/91 | 165959455T | 698368 |

## GOLF II CABRIOLET (93>98)

| | | | | | | | | | |
|---|---|---|---|---|---|---|---|---|---|
| 1.8 i 1E7/3/5 | E | 1781 | AAM,ABS,ADZ,ANP | M | - | | 09/93 ▸ 02/98 | 1H0959455 | 698370 |
| 1.8 i 1E7/3/5 | E | 1781 | AAM,ABS,ADZ,ANP | M | - | | 09/93 ▸ 02/98 | 1H0959455D | 698367 |
| 1.8 i 1E7/3/5 | E | 1781 | ABS,ADZ,ANP | A | - | | 09/93 ▸ 02/98 | 1H0959455 | 698370 |
| 1.8 i 1E7/3/5 | E | 1781 | ABS,ADZ,ANP | A | - | | 09/93 ▸ 02/98 | 1H0959455D | 698367 |
| 2.0 i 1E7/3/5 | E | 1984 | 2E,AGG | M | - | | 09/93 ▸ 02/98 | 1H0959455 | 698370 |
| 2.0 i 1E7/3/5 | E | 1984 | 2E,AGG | M | - | | 09/93 ▸ 02/98 | 1H0959455D | 698367 |
| 2.0 i 1E7/3/5 | E | 1984 | AGG | A | +/- | | 08/95 ▸ 02/98 | 1H0959455AD | 696032 |
| 2.0 i 1E75 | E | 1984 | 2E | A | - | | 09/93 ▸ 09/94 | 1H0959455D | 698367 |
| 2.0 i 1E7/3/5 | E | 1984 | 2E,AGG | A | - | | 09/93 ▸ 02/98 | 1H0959455 | 698370 |
| 1.9 TDi 1E7/3/5 | D | 1896 | 1Z,AHU | M | - | | 08/95 ▸ 02/98 | 1H0959455D | 698367 |
| 1.9 TDi 1E7/3/5 | D | 1896 | 1Z,AHU | M | - | | 08/95 ▸ 02/98 | 1H0959455 | 698370 |
| 1.9 TDi 1E7/3/5 | D | 1896 | 1Z,AHU | A | - | | 08/95 ▸ 12/97 | 1H0959455D | 698367 |
| 1.9 TDi 1E7/3/5 | D | 1896 | AHU | A | - | | 07/96 ▸ 12/97 | 1H0959455AD | 696032 |

## GOLF III (91>97)

| | | | | | | | | | |
|---|---|---|---|---|---|---|---|---|---|
| 1.4 1H1/0/2/3/B | E | 1390 | AEX | M | +/- | | 08/95 ▸ 12/97 | 1H0959455D | 698367 |
| 1.4 i 1H5/0/2/B | E | 1390 | AEX | M | +/- | | 05/96 ▸ 11/97 | 1H0959455AD | 696032 |
| 1.4,1.4 i 1H1/0/2/3/B, 1H5/0/2 B | E | 1390 | AEX | M | - | | 08/95 ▸ 12/97 | 1H0959455 | 698370 |
| 1.4 i 1H52 | E | 1391 | ABD | M | +/- | | 09/93 ▸ 06/95 | 1H0959455AD | 696032 |
| 1.4 1H1/2/3 | E | 1391 | ABD | M | - | | 11/91 ▸ 06/95 | 1H0959455D | 698367 |
| 1.4,1.4 i 1H52, 1H1/2/3 | E | 1391 | ABD | M | - | | 11/91 ▸ 06/95 | 1H0959455 | 698370 |
| 1.6,1.6 i 1H1/0/2/3/5 | E | 1598 | AEA,AEE,AEK | M | +/- | | 11/91 ▸ 12/97 | 1H0959455D | 698367 |
| 1.6 i 1H5/2/3/5 | E | 1598 | AEK | M | +/- | | 10/94 ▸ 12/95 | 1H0959455AD | 696032 |
| 1.6,1.6 i 1H1/0/2/3/5/B/E, 1H5 0/2/3/5/B | E | 1598 | ABU,AEA,AEE,AEK,AFT,AKS | M | - | | 11/91 ▸ 02/99 | 1H0959455 | 698370 |
| 1.6,1.6 i 1H1/0/2/3/5/B/E | E | 1598 | ABU,AFT,AKS | M | - | | 09/92 ▸ 12/97 | 1H0959455D | 698367 |
| 1.6 i 1H1/2/3 | E | 1598 | AEK | A | +/- | | 10/94 ▸ 12/95 | 1H0959455D | 698367 |
| 1.6 i 1H5/2/3 | E | 1598 | AEK | A | +/- | | 01/95 ▸ 12/95 | 1H0959455AD | 696032 |
| 1.6 i 1H1/0/2/3/B, 1H5/0/2/3/B | E | 1598 | AEK,AFT | A | - | | 10/94 ▸ 02/99 | 1H0959455 | 698370 |
| 1.6 i 1H1/0/2/3/B | E | 1598 | AFT | A | - | | 12/95 ▸ 12/97 | 1H0959455D | 698367 |
| 1.8 i 1H5/0/2/3/5 | E | 1781 | AAM,ABS,ADZ | M | +/- | | 09/93 ▸ 02/99 | 1H0959455AD | 696032 |
| 1.8,1.8 i 1H1/0/2/3/5 | E | 1781 | ADZ | M | +/- | | 10/94 ▸ 12/97 | 1H0959455D | 698367 |
| 1.8 1H1/2/3/5 | E | 1781 | AAM,ABS | M | + | | 11/91 ▸ 12/97 | 1H0959455D | 698367 |
| 1.8,1.8 i 1H1/0/2/3/5, 1H5/0/2 3/5 | E | 1781 | AAM,ABS,ACC,ADZ | M | - | | 11/91 ▸ 02/99 | 1H0959455 | 698370 |
| 1.8 1H1/0/2/3/5 | E | 1781 | AAM,ABS | M | - | | 11/91 ▸ 12/97 | 1H0959455D | 698367 |
| 1.8 i 1H5/0/2/3 | E | 1781 | AAM,ABS,ADZ | A | +/- | | 09/93 ▸ 02/99 | 1H0959455AD | 696032 |
| 1.8 i 1H1/0/2/3 | E | 1781 | ADZ | A | +/- | | 10/94 ▸ 12/97 | 1H0959455D | 698367 |
| 1.8 1H1/0/2/3 | E | 1781 | AAM,ABS | A | + | | 11/91 ▸ 12/97 | 1H0959455D | 698367 |
| 1.8 1H1/2/3 | E | 1781 | AAM,ABS | A | - | | 11/91 ▸ 12/97 | 1H0959455D | 698367 |
| 1.8,1.8 i 1H1/0/2/3, 1H5/0/2/3 | E | 1781 | AAM,ABS,ADZ | A | - | | 11/91 ▸ 02/99 | 1H0959455 | 698370 |
| 2.0 i 1H5/2/3/5 | E | 1984 | 2E,ADY | M | +/- | | 09/93 ▸ 04/96 | 1H0959455AD | 696032 |
| 2.0 E 1H1/0/2/3/5/6 | E | 1984 | ADY,AEP | M | +/- | | 10/94 ▸ 12/97 | 1H0959455D | 698367 |
| 2.0 E 1H10 | E | 1984 | ADY | M | +/- | | 05/96 ▸ 12/97 | 1H0959455 | 698370 |
| 2.0 16V,2.0 E 1H1/2/3/6 | E | 1984 | 2E,ABF | M | + | | 11/91 ▸ 06/95 | 1H0959455D | 698367 |
| 2.0 16V,2.0 E,2.0 i 1H33, 1H1/0/2/3/5/6 1H5/0/2/3/5 | E | 1984 | 2E,ABF,ADY,AEP,AGG,AKR | M | - | | 11/91 ▸ 04/99 | 1H0959455 | 698370 |
| 2.0 16V,2.0 E 1H1/0/2/3/5/6 | E | 1984 | 2E,ABF,AGG,AKR | M | - | | 11/91 ▸ 12/97 | 1H0959455D | 698367 |
| 2.0 E 1H13 | E | 1984 | AEP | A | +/- | | 01/95 ▸ 12/97 | 1H0959455D | 698367 |

# VOLKSWAGEN (.../...)

## GOLF III (91>97) (.../...)

| Type Ctr. | | CC | | AC | | 2+3 | OE | Valeo |
|---|---|---|---|---|---|---|---|---|
| 2.0 E 1H1/2/3 | E | 1984 | 2E | A | + | 11/91 ▸ 09/94 | 1H0959455D | **698367** |
| 2.0 E 1H1/2/3 | E | 1984 | AGG | A | + | 10/94 ▸ 07/95 | 1H0959455AD | **696032** |
| 2.0 E,2.0 i 1H1/2/3, 1H5/0/2/3 | E | 1984 | 2E,ADY,AEP,AGG | A | - | 11/91 ▸ 02/99 | 1H0959455 | **698370** |
| 2.0 E,2.0 i 1H1/2/3, 1H5/2/3<br>▸ 1H-TP049 074 | E | 1984 | 2E,ADY | A | +/- | 11/91 ▸ 04/96 | 1H0959455AD | **696032** |
| 2.8 VR6 1H16 | E | 2792 | AAA | M | +/- | 01/92 ▸ 12/97 | 1H0959455AD | **696032** |
| 2.8 VR6 1H16 | E | 2792 | AAA | A | +/- | 07/92 ▸ 07/95 | 1H0959455AD | **696032** |
| 1.9 TD 1H1/0/2/3/5, 1H5/0/2/3/5 | D | 1896 | AAZ | M | +/- | 11/91 ▸ 02/99 | 1H0959455AD | **696032** |
| 1.9 SDi,1.9 SDi Ecomatic 1H1/0/2/3 | D | 1896 | AEY | M | +/- | 01/95 ▸ 12/97 | 1H0959455D | **698367** |
| 1.9 TDi 1H1/2/5 | D | 1896 | 1Z | M | + | 06/93 ▸ 07/96 | 1H0959455D | **698367** |
| 1.9 D,1.9 D Ecomatic 1H0/0, 1H1/0/2/3/5<br>1.9 SDi,1.9 TDi 1H5/0/2/3/5 | D | 1896 | 1Y,1Z,AEY,AFN,AHU,ALE | M | - | 11/91 ▸ 02/99 | 1H0959455D | **698367** |
| 1.9 SDi,1.9 SDi Ecomatic 1H0/0, 1H1/0/2/3/5<br>1.9 TDi 1H5/0/2/3/5 | D | 1896 | 1Z,AEY,AFN,AHU,ALE | M | - | 06/93 ▸ 02/99 | 1H0959455 | **698370** |
| 1.9 TD 1H1/2/3 | D | 1896 | AAZ | A | +/- | 11/91 ▸ 06/93 | 1H0959455AD | **696032** |
| 1.9 TDi 1H12 | D | 1896 | 1Z | A | + | 07/93 ▸ 07/96 | 1H0959455D | **698367** |
| 1.9 TDi 1H1/0/2/3, 1H5/0/2/3<br>B | D | 1896 | 1Z,AHU | A | - | 06/93 ▸ 02/99 | 1H0959455D | **698367** |
| 1.9 TDi 1H1/0/2/3 | D | 1896 | 1Z,AFN | A | - | 06/93 ▸ 12/97 | 1H0959455 | **698370** |
| 1.9 D,1.9 D Ecomatic 1H1/0/2/3 | D | 1896 | 1Y | M | + | 11/91 ▸ 12/97 | 1H0959455AD | **696032** |

## GOLF III CABRIOLET (98>2002)

| | | | | | | | | |
|---|---|---|---|---|---|---|---|---|
| 1.6 i 1E7/4/6/F | E | 1598 | AFT,AKS | M | - | 03/98 ▸ 04/00 | 1H0959455 | **698370** |
| 1.6 i 1E7/4/6/F | E | 1598 | AFT,AKS | M | - | 03/98 ▸ 04/00 | 1H0959455D | **698367** |
| 1.6 i 1E7/4/6/F | E | 1598 | AFT | A | - | 03/98 ▸ 04/00 | 1H0959455 | **698370** |
| 1.6 i 1E7/4/6/F | E | 1598 | AFT | A | - | 03/98 ▸ 04/00 | 1H0959455D | **698367** |
| 1.8 i 1E7/4/6 | E | 1781 | AAM,ADZ,ANN,ANP | M | - | 03/98 ▸ 04/00 | 1H0959455D | **698367** |
| 1.8 i 1E7/4/6 | E | 1781 | AAM,ADZ,ANN,ANP | M | - | 03/98 ▸ 04/00 | 1H0959455 | **698370** |
| 1.8 i 1E7/4/6 | E | 1781 | ADZ,ANP | A | - | 03/98 ▸ 04/00 | 1H0959455 | **698370** |
| 1.8 i 1E7/4/6 | E | 1781 | ADZ,ANP | A | - | 03/98 ▸ 04/00 | 1H0959455D | **698367** |
| 2.0 i 1E7/4/6 | E | 1984 | AGG,AKR | M | + | 03/98 ▸ 04/00 | 1H0959455AD | **696032** |
| 2.0 i 1E76 | E | 1984 | AGG | M | - | 03/98 ▸ 04/00 | 1H0959455AD | **696032** |
| 2.0 i 1E7/4/6 | E | 1984 | AGG,AKR | M | - | 03/98 ▸ 04/00 | 1H0959455D | **698367** |
| 2.0 i 1E7/4/6 | E | 1984 | AGG,AKR | M | - | 03/98 ▸ 04/00 | 1H0959455 | **698370** |
| 2.0 i 1E7/4/6 | E | 1984 | AGG | A | + | 03/98 ▸ 04/00 | 1H0959455AD | **696032** |
| 2.0 i 1E7/4/6 | E | 1984 | AGG | A | - | 03/98 ▸ 04/00 | 1H0959455D | **698367** |
| 2.0 i 1E7/4/6 | E | 1984 | AGG | A | - | 03/98 ▸ 04/00 | 1H0959455 | **698370** |
| 1.9 TDi 1E7/4/6 | D | 1896 | AFN,AHU,ALE | M | +/- | 03/98 ▸ 06/00 | 1H0959455AD | **696032** |
| 1.9 TDi 1E7/4/6 | D | 1896 | AFN,AHU,ALE | M | - | 03/98 ▸ 06/00 | 1H0959455D | **698367** |

## GOLF IV (97>2003)

| | | | | | | | | |
|---|---|---|---|---|---|---|---|---|
| 2.0 i 1J1/0/1/2/3, 1J5/0/1/2/3 | F | 1984 | BEH | M | +/- | 05/02 ▸ 06/06 | 6X0959455F | **696042** |
| 2.0 i 1J1/0/1/2/3, 1J5/0/1/2/3 | F | 1984 | BEH | M | +/- | 05/02 ▸ 06/06 | 1J0959455M | **698373** |
| 2.0 i 1J1/0/1/2/3, 1J5/0/1/2/3 | F | 1984 | BEH | M | +/- | 05/02 ▸ | 6X0959455A | **696042** |
| 2.0 i 1J1/0/1/2/3, 1J5/0/1/2/3 | F | 1984 | BEH | M | - | 05/02 ▸ 06/06 | 6E0959455A | |
| 1.4 i 16V 1J1/0/1/2, 1J5/0/1/2<br>3 | E | 1390 | AHW,AKQ,APE,AXP,BCA | M | +/- | 10/97 ▸ 06/06 | 6X0959455F | **696042** |
| 1.4 i 16V 1J1/0/1/2, 1J5/0/1/2<br>3 | E | 1390 | AHW,AKQ,APE,AXP,BCA | M | +/- | 10/97 ▸ | 6X0959455A | **696042** |
| 1.4 i 16V 1J1/0/1/2, 1J5/0/2 | E | 1390 | AXP | M | +/- | 05/00 ▸ 10/01 | 1J0959455M | **698373** |
| 1.4 i 16V 1J12, 1J52 | E | 1390 | AHW,AKQ | M | + | 10/97 ▸ 06/06 | 6X0959455F | **696042** |
| 1.4 i 16V 1J12, 1J52 | E | 1390 | AHW,AKQ | M | + | 10/97 ▸ | 6X0959455A | **696042** |
| 1.4 i 16V 1J1/2, 1J5/2/3 | E | 1390 | AHW,AKQ,APE,AXP | M | + | 10/97 ▸ 06/06 | 1J0959455M | **698373** |
| 1.4 i 16V 1J12, 1J52 | E | 1390 | AHW,AKQ | M | + | 10/97 ▸ | 1J0959455F | |
| 1.4 i 16V 1J12 | E | 1390 | AKQ,AXP | M | - | 10/97 ▸ 10/01 | 6X0959455F | **696042** |
| 1.4 i 16V 1J1/0/1/2, 1J5/0/1/2<br>3 | E | 1390 | AHW,AKQ,APE,AXP,BCA | M | - | 10/97 ▸ 06/06 | 6E0959455A | |
| 1.4 i 16V 1J12, 1J52 | E | 1390 | AHW,AKQ,AXP | M | - | 10/97 ▸ | 1J0959455F | |
| 1.4 i 16V 1J12, 1J52 | E | 1390 | AHW,AKQ,AXP | M | - | 10/97 ▸ | 6X0959455A | **696042** |
| 1.4 i 16V 1J12, 1J52 | E | 1390 | AHW,AKQ,AXP | M | - | 10/97 ▸ | 1J0959455B | |
| 1.4 i 16V 1J12 | E | 1390 | AHW | M | | 10/97 ▸ 07/99 | 1J0959455M | **698373** |
| 1.4 i 16V 1J12 | E | 1390 | AHW | A | +/- | 10/97 ▸ | 6X0959455A | **696042** |
| 1.4 i 16V 1J12 | E | 1390 | AHW | A | +/- | 10/97 ▸ 05/00 | 6X0959455F | **696042** |
| 1.4 i 16V 1J12 | E | 1390 | AHW | A | + | 10/97 ▸ 05/00 | 6X0959455F | **696042** |
| 1.4 i 16V 1J12 | E | 1390 | AHW | A | + | 10/97 ▸ 05/00 | 1J0959455M | **698373** |
| 1.4 i 16V 1J12 | E | 1390 | AHW | A | + | 10/97 ▸ | 6X0959455A | **696042** |
| 1.4 i 16V 1J12 | E | 1390 | AHW | A | + | 10/97 ▸ | 1J0959455F | |
| 1.4 i 16V 1J12 | E | 1390 | AHW | A | - | 10/97 ▸ | 6X0959455A | **696042** |
| 1.4 i 16V 1J12 | E | 1390 | AHW | A | - | 10/97 ▸ | 1J0959455F | |

Fan Motor + Blades Moteur + hélice Lüftermotor + Lüfterrad Motorino + Ventola Ventilatormotor Fan motoru + Kanatlar
Moto-ventilador + Aspas Мотор вентилятора + лопасти вентилятора Ventilátor motor és lapát Motor sahary + vrtule Ventilator motor + Lame Μοτέρ ανεμιστήρων + Πτερωτές



• **New** Nouveau **Nuevo** Novo **Nuovo** Nieuw **Neu** Nowość **Yeni** Новый Νέο **Novy**

# VOLKSWAGEN (.../...)

## GOLF IV (97>2003) (.../...)

| | | | CC | | | AC | | | OE | Valeo | |
|---|---|---|---|---|---|---|---|---|---|---|---|
| 1.4 i 16V | 1J12 | E | 1390 | AHW | A | - | | 10/97 ▸ | 1J0959455B | | |
| 1.4 i 16V | 1J12 | E | 1390 | AHW | A | - | | 10/97 ▸ 05/00 | 6E0959455A | | |
| 1.6 FSI 16V,1.6 i<br>1.6 i 16V | 1J1/0/1/2/3/5, 1J5/0<br>1/2/3/5 | E | 1595 | AEH,AKL,APF,ATN,AUS,AVU,AZD<br>BAD,BCB | M | +/- | | 10/97 ▸ 06/06 | 6X0959455F | 696042 | |
| 1.6 FSI 16V,1.6 i<br>1.6 i 16V | 1J1/0/1/2/3/5, 1J5/0<br>1/2/3/5 | E | 1595 | AEH,AKL,APF,ATN,AUS,AVU,AZD<br>BAD,BCB | M | +/- | | 10/97 ▸ | 6X0959455A | 696042 | |
| 1.6 i | 1J1/0/1/2/3, 1J5/0/1/2/3 | E | 1595 | AVU | M | +/- | | 05/01 ▸ 04/02 | 1J0959455M | 698373 | |
| 1.6 i | 1J1/2/5 | E | 1595 | AEH,AKL | M | + | | 10/97 ▸ 06/02 | 6X0959455F | 696042 | |
| 1.6 i | 1J1/0/1/2/3/5, 1J5/0/1/2/3/5 | E | 1595 | AEH,AKL,APF | M | + | | 10/97 ▸ 06/02 | 1J0959455M | 698373 | |
| 1.6 i | 1J1/2/5, 1J5/2/5 | E | 1595 | AEH,AKL,APF | M | + | | 10/97 ▸ | 6X0959455A | 696042 | |
| 1.6 i | 1J1/2/5, 1J5/2/5 | E | 1595 | AEH,AKL,APF | M | + | | 10/97 ▸ | 1J0959455F | | |
| 1.6 i | 1J1/2/5, 1J5/2/5 | E | 1595 | AEH,AKL,APF | M | - | | 10/97 ▸ | 6X0959455A | 696042 | |
| 1.6 FSI 16V,1.6 i<br>1.6 i 16V | 1J1/0/1/2/3/5, 1J5/0<br>1/2/3/5 | E | 1595 | AEH,AKL,APF,ATN,AUS,AVU,AZD<br>BAD,BCB,BFQ | M | - | | 10/97 ▸ 06/06 | 6E0959455A | | |
| 1.6 i | 1J1/2/5, 1J5/2/5 | E | 1595 | AEH,AKL,APF | M | - | | 10/97 ▸ | 1J0959455F | | |
| 1.6 i | 1J1/2/5, 1J5/2/5 | E | 1595 | AEH,AKL,APF | M | - | | 10/97 ▸ 05/00 | 6X0959455F | 696042 | |
| 1.6 i | 1J1/2/5, 1J5/2/5 | E | 1595 | AEH,AKL,APF | M | - | | 10/97 ▸ | 1J0959455B | | |
| 1.6 i | 1J1/0/1/2/3/5, 1J5/0/1/2/3/5 | E | 1595 | AEH,AKL,APF,AVU | A | +/- | | 10/97 ▸ 05/04 | 6X0959455F | 696042 | |
| 1.6 i | 1J1/0/1/2/3/5, 1J5/0/1/2/3/5 | E | 1595 | AEH,AKL,APF,AVU | A | +/- | | 10/97 ▸ | 6X0959455A | 696042 | |
| 1.6 i | 1J1/0/1/2/3, 1J5/0/1/2/3 | E | 1595 | AVU | A | +/- | | 09/00 ▸ 04/02 | 1J0959455M | 698373 | |
| 1.6 i | 1J1/0/1/2/3/5, 1J5/0/1/2/3/5 | E | 1595 | AEH,AKL,APF | A | + | | 10/97 ▸ 05/04 | 1J0959455M | 698373 | |
| 1.6 i | 1J52, 1J1/2/5 | E | 1595 | AEH,AKL | A | + | | 10/97 ▸ 05/00 | 6X0959455F | 696042 | |
| 1.6 i | 1J52, 1J1/2/5 | E | 1595 | AEH,AKL | A | + | | 10/97 ▸ 05/00 | 6X0959455A | 696042 | |
| 1.6 i | 1J52, 1J1/2/5 | E | 1595 | AEH,AKL | A | + | | 10/97 ▸ 05/00 | 1J0959455F | | |
| 1.6 i | 1J1/2/5, 1J5/2/5 | E | 1595 | AEH,AKL | A | - | | 10/97 ▸ 05/00 | 1J0959455F | | |
| 1.6 i | 1J1/2/5, 1J5/2/5 | E | 1595 | AEH,AKL | A | - | | 10/97 ▸ 05/00 | 6X0959455A | 696042 | |
| 1.6 i | 1J1/0/1/2/3/5, 1J5/0/1/2/3/5 | E | 1595 | AEH,AKL,APF,AVU,BFQ | A | - | | 10/97 ▸ 06/06 | 6E0959455A | | |
| 1.6 i | 1J1/2/5, 1J5/2/5 | E | 1595 | AEH,AKL | A | - | | 10/97 ▸ 05/00 | 1J0959455B | | |
| 1.6 i | 1J1/2, 1J5/2/5 | E | 1595 | AEH,AKL | A | - | | 01/98 ▸ 05/00 | 6X0959455F | 696042 | |
| 1.8 i,1.8 i 20V<br>1.8 i Turbo<br>1.8 i Turbo 20V | 1J1/0/1/2/3/5/6, 1J5<br>0/1/2/3 | E | 1781 | AGN,AGU,ARZ,AUM,AUQ | M | +/- | | 10/97 ▸ | 6X0959455A | 696042 | |
| 1.8 i,1.8 i 20V<br>1.8 i Turbo<br>1.8 i Turbo 20V | 1J1/0/1/2/3/5/6, 1J5<br>0/1/2/3 | E | 1781 | AGN,AGU,ARZ,AUM,AUQ | M | +/- | | 10/97 ▸ 05/06 | 6X0959455F | 696042 | |
| 1.8 i,1.8 i 20V<br>1.8 i Turbo<br>1.8 i Turbo 20V | 1J1/0/1/2/3/5/6, 1J5<br>0/1/2/3/5 | E | 1781 | AGN,AGU,ARZ | M | + | | 10/97 ▸ 05/06 | 1J0959455M | 698373 | |
| 1.8 i 20V,1.8 i Turbo 20V | 1J1/6, 1J5/2/5 | E | 1781 | AGN,AGU | M | + | | 10/97 ▸ 05/00 | 6X0959455F | 696042 | |
| 1.8 i 20V,1.8 i Turbo 20V | 1J1/6, 1J5/2/5 | E | 1781 | AGN,AGU | M | + | | 10/97 ▸ 05/00 | 6X0959455A | 696042 | |
| 1.8 i 20V,1.8 i Turbo 20V | 1J1/6, 1J5/2/5 | E | 1781 | AGN,AGU | M | + | | 10/97 ▸ 05/00 | 1J0959455F | | |
| 1.8 i 20V,1.8 i Turbo 20V | 1J1/2/5/6, 1J5/2/5 | E | 1781 | AGN,AGU | M | - | | 10/97 ▸ | 1J0959455B | | |
| 1.8 i,1.8 i 20V<br>1.8 i Turbo<br>1.8 i Turbo 20V | 1J1/0/1/2/3/5/6, 1J5<br>0/1/2/3/5 | E | 1781 | AGN,AGU,ARZ,AUM,AUQ | M | - | | 10/97 ▸ 05/06 | 6E0959455A | | |
| 1.8 i 20V,1.8 i Turbo 20V | 1J1/2/5/6 | E | 1781 | AGN,AGU | M | - | | 10/97 ▸ 09/00 | 6X0959455F | 696042 | |
| 1.8 i 20V,1.8 i Turbo 20V | 1J1/2/5/6, 1J5/2/5 | E | 1781 | AGN,AGU | M | - | | 10/97 ▸ | 6X0959455A | 696042 | |
| 1.8 i 20V,1.8 i Turbo 20V | 1J1/2/5/6, 1J5/2/5 | E | 1781 | AGN,AGU | M | - | | 10/97 ▸ | 1J0959455F | | |
| 1.8 i Turbo 20V | 1J16 | E | 1781 | AGU | M | | | 10/98 ▸ 05/99 | 1J0959455M | 698373 | |
| 1.8 i 20V,1.8 i Turbo 20V | 1J1/2/3/5/6, 1J5/2/3 | E | 1781 | AGN,AGU,AUM | A | +/- | | 10/97 ▸ 05/06 | 6X0959455F | 696042 | |
| 1.8 i 20V,1.8 i Turbo 20V | 1J1/2/3/5/6, 1J5/2/3 | E | 1781 | AGN,AGU,AUM | A | +/- | | 10/97 ▸ | 6X0959455A | 696042 | |
| 1.8 i 20V,1.8 i Turbo 20V | 1J1/2/3/5/6, 1J5/2/3 | E | 1781 | AGN,AGU | A | + | | 10/97 ▸ 04/02 | 1J0959455M | 698373 | |
| 1.8 i 20V,1.8 i Turbo 20V | 1J1/2/3/5/6, 1J5/2/3 | E | 1781 | AGN,AGU,AUM | A | - | | 10/97 ▸ 05/06 | 6E0959455A | | |
| 1.8 i 20V,1.8 i Turbo 20V | 1J1/2/5/6 | E | 1781 | AGN,AGU | A | - | | 10/97 ▸ 05/00 | 6X0959455F | 696042 | |
| 1.8 i 20V,1.8 i Turbo 20V | 1J1/2/5/6 | E | 1781 | AGN,AGU | A | - | | 10/97 ▸ 05/00 | 1J0959455B | | |
| 1.8 i 20V,1.8 i Turbo 20V | 1J1/2/5/6 | E | 1781 | AGN,AGU | A | - | | 10/97 ▸ 05/00 | 1J0959455F | | |
| 1.8 i 20V,1.8 i Turbo 20V | 1J1/2/5/6 | E | 1781 | AGN,AGU | A | - | | 10/97 ▸ 05/00 | 6X0959455A | 696042 | |
| 2.0 i | 1J1/0/1/2/3/5/6, 1J5/0/1/2/3/5 | E | 1984 | APK,AQY,AZG,AZH,AZJ | M | +/- | | 08/98 ▸ 06/06 | 6X0959455F | 696042 | |
| 2.0 i | 1J1/0/1/2/3/5/6, 1J5/0/1/2/3/5 | E | 1984 | APK,AQY,AZG,AZH,AZJ | M | +/- | | 08/98 ▸ | 6X0959455A | 696042 | |
| 2.0 i | 1J1/0/1/2/3, 1J5/0/1/2/3 | E | 1984 | AZH | M | +/- | | 04/00 ▸ 06/01 | 1J0959455M | 698373 | |
| 2.0 i | 1J1/0/1/2/3/5/6, 1J5/0/1/2/3/5 | E | 1984 | APK,AQY | M | + | | 08/98 ▸ 06/06 | 1J0959455M | 698373 | |
| 2.0 i | 1J1/2/5, 1J5/2/5 | E | 1984 | APK,AQY | M | + | | 08/98 ▸ 05/00 | 6X0959455A | 696042 | |
| 2.0 i | 1J1/2/5, 1J5/2/5 | E | 1984 | APK,AQY | M | + | | 08/98 ▸ 05/00 | 1J0959455F | | |
| 2.0 i | 1J1/2, 1J5/2/5 | E | 1984 | APK,AQY | M | + | | 11/98 ▸ 05/00 | 6X0959455F | 696042 | |
| 2.0 i | 1J1/2/5 | E | 1984 | APK,AQY | M | - | | 08/98 ▸ 05/00 | 6X0959455F | 696042 | |
| 2.0 i | 1J1/2/5, 1J5/2/5 | E | 1984 | APK,AQY | M | - | | 08/98 ▸ 05/00 | 6X0959455A | 696042 | |
| 2.0 i | 1J1/2/5, 1J5/2/5 | E | 1984 | APK,AQY | M | - | | 08/98 ▸ 05/00 | 1J0959455F | | |
| 2.0 i | 1J1/2/5, 1J5/2/5 | E | 1984 | APK,AQY | M | - | | 08/98 ▸ 05/00 | 1J0959455B | | |
| 2.0 i | 1J1/0/1/2/3/5/6, 1J5/0/1/2/3/5 | E | 1984 | APK,AQY,AZG,AZH,AZJ | M | - | | 08/98 ▸ 06/06 | 6E0959455A | | |
| 2.0 i | 1J25, 1J1/0/1/2/3/5, 1J5/0/1/2/3 | E | 1984 | APK,AQY,AZJ | A | +/- | | 08/98 ▸ | 6X0959455A | 696042 | |

# VOLKSWAGEN (.../...)

## GOLF IV (97>2003) (.../...)

| | | | CC | | | AC | | | OE | Valeo | |
|---|---|---|---|---|---|---|---|---|---|---|---|
| 2.0 i | 1J25, 1J1/0/1/2/3/5, 1J5/0/1/2/3 | E | 1984 | APK,AQY,AZJ | A | +/- | | 08/98 ▸ 06/06 | 6X0959455F | **696042** | |
| 2.0 i | 1J25, 1J1/2, 1J5/2/5 | E | 1984 | APK,AQY | A | + | | 08/98 ▸ 05/00 | 6X0959455F | **696042** | |
| 2.0 i | 1J25, 1J1/0/1/2/3/5, 1J5/0/1/2/3/5 | E | 1984 | APK,AQY | A | + | | 08/98 ▸ 06/06 | 1J0959455M | **698373** | |
| 2.0 i | 1J25, 1J1/2, 1J5/2/5 | E | 1984 | APK,AQY | A | + | | 08/98 ▸ | 6X0959455A | **696042** | |
| 2.0 i | 1J25, 1J1/2, 1J5/2/5 | E | 1984 | APK,AQY | A | + | | 08/98 ▸ | 1J0959455F | | |
| 2.0 i | 1J25, 1J1/0/1/2/3/5, 1J5/0/1/2/3/5 | E | 1984 | APK,AQY,AZJ | A | - | | 08/98 ▸ 06/06 | 6E0959455A | | |
| 2.0 i | 1J25, 1J1/2/5, 1J5/2/5 | E | 1984 | APK,AQY | A | - | | 08/98 ▸ | 1J0959455B | | |
| 2.0 i | 1J25, 1J1/2/5, 1J5/2/5 | E | 1984 | APK,AQY | A | - | | 08/98 ▸ | 1J0959455F | | |
| 2.0 i | 1J25, 1J1/2/5, 1J5/2/5 | E | 1984 | APK,AQY | A | - | | 08/98 ▸ | 6X0959455A | **696042** | |
| 2.0 i | 1J1/2/5, 1J5/2/5 | E | 1984 | APK,AQY | A | - | | 08/98 ▸ 05/00 | 6X0959455F | **696042** | |
| 2.3 i VR5 20V | 1J53, 1J1/0/1/2/3/5 6 | E | 2324 | AGZ | M | +/- | | 10/97 ▸ 02/01 | 6X0959455F | **696042** | |
| 2.3 i VR5 20V | 1J53, 1J1/0/1/2/3/5 6 | E | 2324 | AGZ | M | +/- | | 10/97 ▸ 02/01 | 6X0959455A | **696042** | |
| 2.3 i VR5 20V | 1J53, 1J1/0/1/2/3/5 6 | E | 2324 | AGZ | M | +/- | | 10/97 ▸ 02/01 | 1J0959455M | **698373** | |
| 2.3 i VR5 20V | 1J55, 1J1/5/6 | E | 2324 | AGZ | M | + | | 10/97 ▸ 05/00 | 6X0959455F | **696042** | |
| 2.3 i VR5 20V | 1J55, 1J1/5/6 | E | 2324 | AGZ | M | + | | 10/97 ▸ 05/00 | 6X0959455A | **696042** | |
| 2.3 i VR5 20V | 1J55, 1J1/5/6 | E | 2324 | AGZ | M | + | | 10/97 ▸ 05/00 | 1J0959455F | | |
| 2.3 i VR5 20V | 1J16, 1J55 | E | 2324 | AGZ | M | - | | 10/97 ▸ 05/00 | 1J0959455F | | |
| 2.3 i VR5 20V | 1J16, 1J55 | E | 2324 | AGZ | M | - | | 10/97 ▸ 05/00 | 6X0959455A | **696042** | |
| 2.3 i VR5 20V | 1J55, 1J1/5/6 | E | 2324 | AGZ | M | - | | 10/97 ▸ 05/00 | 1J0959455M | **698373** | |
| 2.3 i VR5 20V | 1J53, 1J1/0/1/2/3/5 | E | 2324 | AGZ | A | +/- | | 10/97 ▸ 02/01 | 6X0959455A | **696042** | |
| 2.3 i VR5 20V | 1J53, 1J1/0/1/2/3/5 | E | 2324 | AGZ | A | +/- | | 10/97 ▸ 02/01 | 6X0959455F | **696042** | |
| 2.3 i VR5 20V | 1J53, 1J1/0/1/2/3/5 | E | 2324 | AGZ | A | +/- | | 10/97 ▸ 02/01 | 1J0959455M | **698373** | |
| 2.3 i VR5 20V | 1J15 | E | 2324 | AGZ | A | + | | 10/97 ▸ 05/00 | 1J0959455M | **698373** | |
| 2.3 i VR5 20V | 1J55 | E | 2324 | AGZ | A | + | | 05/99 ▸ 05/00 | 6X0959455A | **696042** | |
| 2.3 i VR5 20V | 1J55 | E | 2324 | AGZ | A | + | | 05/99 ▸ 05/00 | 1J0959455F | | |
| 2.3 i VR5 20V | 1J15, 1J55 | E | 2324 | AGZ | A | - | | 10/97 ▸ 05/00 | 6X0959455F | **696042** | |
| 2.3 i VR5 20V | 1J15, 1J55 | E | 2324 | AGZ | A | - | | 10/97 ▸ 05/00 | 6X0959455A | **696042** | |
| 2.3 i VR5 20V | 1J15, 1J55 | E | 2324 | AGZ | A | - | | 10/97 ▸ 05/00 | 1J0959455F | | |
| 2.3 i VR5 20V | 1J55 | E | 2324 | AGZ | A | - | | 05/99 ▸ 05/00 | 1J0959455M | **698373** | |
| 1.9 SDi,1.9 TDi | 1J1/0/1/2/3/5/6, 1J5 0/1/2/3/5 | D | 1896 | AGP,AGR,AHF,AJM,ALH,AQM,ASV ASZ,ATD,AUY,AXR | M | +/- | | 10/97 ▸ 06/06 | 6X0959455F | **696042** | |
| 1.9 SDi,1.9 TDi | 1J1/0/1/2/3/5/6, 1J5 0/1/2/3/5 | D | 1896 | AGP,AGR,AHF,AJM,ALH,AQM,ASV ASZ,ATD,AUY,AXR | M | +/- | | 10/97 ▸ | 6X0959455A | **696042** | |
| 1.9 TDi | 1J1/0/1/2/3/5/6, 1J5 0/1/2/3/5 | D | 1896 | AJM,AUY | M | +/- | | 05/99 ▸ 07/01 | 1J0959455M | **698373** | |
| 1.9 SDi,1.9 TDi | 1J1/2/5/6, 1J5/2/5 | D | 1896 | AGP,AGR,AHF,ALH,AQM | M | + | | 10/97 ▸ | 1J0959455F | | |
| 1.9 SDi,1.9 TDi | 1J1/0/1/2/3/5/6, 1J5 0/1/2/3/5 | D | 1896 | AGP,AGR,AHF,ALH,AQM | M | + | | 10/97 ▸ 05/06 | 1J0959455M | **698373** | |
| 1.9 SDi,1.9 TDi | 1J1/2/5, 1J5/2/5 | D | 1896 | AGR,AHF,ALH,AQM | M | + | | 10/97 ▸ 05/04 | 6X0959455F | **696042** | |
| 1.9 SDi,1.9 TDi | 1J1/2/5/6, 1J5/2/5 | D | 1896 | AGP,AGR,AHF,ALH,AQM | M | + | | 10/97 ▸ | 6X0959455A | **696042** | |
| 1.9 SDi,1.9 TDi | 1J1/0/1/2/3/5/6, 1J5 0/1/2/3/5 | D | 1896 | AGP,AGR,AHF,AJM,ALH,AQM,ASV ASZ,ATD,AUY,AXR | M | - | | 10/97 ▸ 06/06 | 6E0959455A | | |
| 1.9 SDi,1.9 TDi | 1J1/2/5/6, 1J5/2/5 | D | 1896 | AGP,AGR,AHF,ALH,AQM | M | - | | 10/97 ▸ 05/06 | 6X0959455F | **696042** | |
| 1.9 SDi,1.9 TDi | 1J1/2/5/6, 1J5/2/5 | D | 1896 | AGP,AGR,AHF,ALH,AQM | M | - | | 10/97 ▸ | 1J0959455F | | |
| 1.9 SDi,1.9 TDi | 1J1/2/5/6, 1J5/2/5 | D | 1896 | AGP,AGR,AHF,ALH,AQM | M | - | | 10/97 ▸ | 1J0959455B | | |
| 1.9 SDi,1.9 TDi | 1J1/2/5/6, 1J5/2/5 | D | 1896 | AGP,AGR,AHF,ALH,AQM | M | - | | 10/97 ▸ | 6X0959455A | **696042** | |
| 1.9 TDi | 1J1/0/1/2/3/5, 1J5/0 1/2/3/5 | D | 1896 | AGR,AHF,ALH,ASZ,ATD,AUY | A | +/- | | 10/97 ▸ | 6X0959455A | **696042** | |
| 1.9 TDi | 1J1/0/1/2/3/5, 1J5/0 1/2/3/5 | D | 1896 | AGR,AHF,ALH,ASZ,ATD,AUY | A | +/- | | 10/97 ▸ 05/06 | 6X0959455F | **696042** | |
| 1.9 TDi | 1J1/0/1/2/3/5, 1J5/0 1/2/3/5 | D | 1896 | AUY | A | +/- | | 02/00 ▸ 07/01 | 1J0959455M | **698373** | |
| 1.9 TDi | 1J1/0/1/2/3/5, 1J5/0 1/2/3/5 | D | 1896 | AGR,AHF,ALH | A | + | | 10/97 ▸ 05/03 | 1J0959455M | **698373** | |
| 1.9 TDi | 1J1/2/5, 1J5/2/5 | D | 1896 | AGR,AHF,ALH | A | + | | 10/97 ▸ 05/00 | 6X0959455A | **696042** | |
| 1.9 TDi | 1J1/2/5, 1J5/2/5 | D | 1896 | AGR,AHF,ALH | A | + | | 10/97 ▸ 05/00 | 1J0959455F | | |
| 1.9 TDi | 1J52, 1J1/2/5 | D | 1896 | AGR,AHF,ALH | A | + | | 10/97 ▸ 05/00 | 6X0959455F | **696042** | |
| 1.9 TDi | 1J1/2/5, 1J5/2/5 | D | 1896 | AGR,AHF,ALH | A | - | | 10/97 ▸ 05/00 | 6X0959455F | **696042** | |
| 1.9 TDi | 1J1/0/1/2/3/5, 1J5/0 1/2/3/5 | D | 1896 | AGR,AHF,ALH,ASZ,ATD,AUY | A | - | | 10/97 ▸ 05/06 | 6E0959455A | | |
| 1.9 TDi | 1J1/2/5, 1J5/2/5 | D | 1896 | AGR,AHF,ALH | A | - | | 10/97 ▸ 05/00 | 6X0959455A | **696042** | |
| 1.9 TDi | 1J1/2/5, 1J5/2/5 | D | 1896 | AGR,AHF,ALH | A | - | | 10/97 ▸ 05/00 | 1J0959455F | | |
| 1.9 TDi | 1J1/2/5, 1J5/2/5 | D | 1896 | AGR,AHF,ALH | A | - | | 10/97 ▸ 05/00 | 1J0959455B | | |

## GOLF V (2003>)

| | | | | | | | | | | | |
|---|---|---|---|---|---|---|---|---|---|---|---|
| 1.4 FSi 16V,1.4 TFSi 16V 1.4 TSi 16V | 1K1/0/1/2/B, 1K5/0/1 2 | E | 1390 | BLG,BMY,CAXA | M | +/- | Right/Droite | 05/06 ▸ | 1K0959455DG | | |

Fan Motor + Blades Moteur + hélice Lüftermotor + Lüfterrad Motorino + Ventola Ventilatormotor Fan motoru + Kanatlar
Moto-ventilador + Aspas Мотор вентилятора + лопасти вентилятора Ventilátor motor és lapát Motor sahany + vrtule Ventilator motor + Lame Μοτέρ ανεμιστήρων + Πτερωτές



• **New** Nouveau **Nuevo** Novo **Nuovo** Nieuw **Neu** Nowość **Yeni** Новый Νέο **Novy**

## GOLF V (2003>) (.../...)

| Type Ctr. | | CC | | AC | | | | OE | Valeo |
|---|---|---|---|---|---|---|---|---|---|
| 1.4 FSi 16V,1.4 TFSi 16V<br>1.4 TSi 16V | 1K1/0/1/2/B, 1K5/0/1<br>2 | E | 1390 | BLG,BMY,CAXA | M | +/- | Left/gauche | 05/06 ▸ | 1K0959455EA | |
| 1.4 FSi 16V,1.4 TFSi 16V<br>1.4 TSi 16V | 1K1/0/1/2/B, 1K5/1/2 | E | 1390 | BLG,BMY | M | +/- | Left/gauche | 05/06 ▸ | 1K0959455P | |
| 1.4 FSi 16V,1.4 i 16V | 1K1/0/1/2 | E | 1390 | BCA,BKG,BLN | M | + | Left/gauche | 10/03 ▸ | 1K0959455BC | |
| 1.4 FSi 16V,1.4 i 16V | 1K1/0/1/2 | E | 1390 | BCA,BKG,BLN | M | + | Right/Droite | 10/03 ▸ | 1K0959455R | |
| 1.4 FSi 16V,1.4 i 16V | 1K1/0/1/2 | E | 1390 | BCA,BKG,BLN | M | + | Right/Droite | 10/03 ▸ 05/06 | 1K0959455DG | |
| 1.4 FSi 16V,1.4 i 16V | 1K1/0/1/2 | E | 1390 | BCA,BKG,BLN,BUD | M | + | Left/gauche | 10/03 ▸ | 1K0959455P | |
| 1.4 FSi 16V,1.4 i 16V | 1K1/0/1/2 | E | 1390 | BCA,BKG,BLN,BUD | M | + | Left/gauche | 10/03 ▸ 03/07 | 1K0959455EA | |
| 1.4 TFSi 16V | 1K1B | E | 1390 | BLG | M | - | Left/gauche | 11/05 ▸ 05/07 | 1K0959455N | |
| 1.4 TFSi 16V | 1K1B | E | 1390 | BLG | M | - | Left/gauche | 11/05 ▸ 05/07 | 1K0959455DL | |
| 1.4 TFSi 16V,1.4 TSi 16V | 1K1/B, 1K5/1/2 | E | 1390 | BLG | M | - | Right/Droite | 11/05 ▸ 11/08 | 1K0959455DH | |
| 1.4 FSi 16V,1.4 i 16V | 1K1/0/1/2 | E | 1390 | BCA,BKG | M | | Right/Droite | 10/03 ▸ 05/06 | 1K0959455DG | |
| 1.4 FSi 16V,1.4 i 16V | 1K1/0/1/2 | E | 1390 | BCA,BKG | M | | Right/Droite | 10/03 ▸ | 1K0959455R | |
| 1.4 FSi 16V,1.4 TSi 16V | 1K1/0/1/2/B, 1K5/1/2 | E | 1390 | BMY | A | +/- | Right/Droite | 05/06 ▸ 11/08 | 1K0959455DH | |
| 1.4 FSi 16V,1.4 TSi 16V | 1K1/1/2 | E | 1390 | BMY | A | +/- | Left/gauche | 05/06 ▸ 05/07 | 1K0959455N | |
| 1.4 FSi 16V,1.4 TSi 16V | 1K1/1/2 | E | 1390 | BMY | A | +/- | Left/gauche | 05/06 ▸ 05/07 | 1K0959455DL | |
| 1.4 FSi 16V | 1K1/0/1/B, 1K5/0/1/2 | E | 1390 | CAXA | A | +/- | Left/gauche | 11/07 ▸ 11/08 | 1K0959455EA | |
| 1.4 FSi 16V | 1K1/0/1/B, 1K5/0/1/2 | E | 1390 | CAXA | A | +/- | Right/Droite | 11/07 ▸ 11/08 | 1K0959455DG | |
| 1.4 TFSi 16V | 1K1B | E | 1390 | BLG | A | - | Left/gauche | 05/06 ▸ 05/07 | 1K0959455N | |
| 1.4 TFSi 16V | 1K1B | E | 1390 | BLG | A | - | Left/gauche | 05/06 ▸ 05/07 | 1K0959455DL | |
| 1.4 TFSi 16V,1.4 TSi 16V | 1K1/B, 1K5/1/2 | E | 1390 | BLG | A | - | Right/Droite | 05/06 ▸ 11/08 | 1K0959455DH | |
| 1.6 i | 1K1/0/1/2 | E | 1595 | BGU,BSE,BSF | M | + | Right/Droite | 01/04 ▸ 11/08 | 1K0959455DG | |
| 1.6 i | 1K1/0/1/2 | E | 1595 | BGU,BSE,BSF | M | + | Left/gauche | 01/04 ▸ | 1K0959455BC | |
| 1.6 i | 1K1/0/1/2 | E | 1595 | BGU,BSE,BSF | M | + | Right/Droite | 01/04 ▸ | 1K0959455R | |
| 1.6 i | 1K1/0/1/2 | E | 1595 | BGU,BSE,BSF | M | + | Left/gauche | 01/04 ▸ 11/08 | 1K0959455EA | |
| 1.6 i | 1K1/0/1/2 | E | 1595 | BGU,BSE,BSF | M | + | Left/gauche | 01/04 ▸ | 1K0959455P | |
| 1.6 i | 1K1/0/1/2 | E | 1595 | BGU,BSE,BSF | A | + | Left/gauche | 01/04 ▸ | 1K0959455BC | |
| 1.6 i | 1K1/0/1/2 | E | 1595 | BGU,BSE,BSF | A | + | Left/gauche | 01/04 ▸ | 1K0959455P | |
| 1.6 i | 1K1/0/1/2 | E | 1595 | BGU,BSE,BSF | A | + | Right/Droite | 01/04 ▸ | 1K0959455R | |
| 1.6 i | 1K1/0/1/2 | E | 1595 | BGU,BSE,BSF | A | + | Right/Droite | 01/04 ▸ 11/08 | 1K0959455DG | |
| 1.6 i<br>▸ 1K-7-105 000 | 1K1/0/1/2 | E | 1595 | BGU,BSE,BSF | A | + | | 01/04 ▸ 11/08 | 1K0959455EA | |
| 1.6 FSi 16V | 1K1/0/1/2 | E | 1598 | BAG,BLF,BLP | M | + | Left/gauche | 10/03 ▸ | 1K0959455BC | |
| 1.6 FSi 16V | 1K1/0/1/2 | E | 1598 | BAG,BLF,BLP | M | + | Left/gauche | 10/03 ▸ | 1K0959455P | |
| 1.6 FSi 16V | 1K1/0/1/2 | E | 1598 | BAG,BLF,BLP | M | + | Right/Droite | 10/03 ▸ | 1K0959455R | |
| 1.6 FSi 16V | 1K1/0/1/2 | E | 1598 | BAG,BLF,BLP | M | + | Right/Droite | 10/03 ▸ 07/08 | 1K0959455DG | |
| 1.6 FSi 16V | 1K1/0/1/2 | E | 1598 | BAG,BLF,BLP | M | + | Left/gauche | 10/03 ▸ 07/08 | 1K0959455EA | |
| 1.6 FSi 16V | 1K1/0/1/2 | E | 1598 | BAG | M | | Right/Droite | 10/03 ▸ | 1K0959455R | |
| 1.6 FSi 16V | 1K1/0/1/2 | E | 1598 | BAG | M | | Right/Droite | 10/03 ▸ 07/04 | 1K0959455DG | |
| 1.6 FSi 16V | 1K1/0/1/2 | E | 1598 | BLP | A | +/- | | 05/04 ▸ 02/05 | 1K0959455P | |
| 1.6 FSi 16V | 1K1/0/1/2 | E | 1598 | BLP | A | +/- | | 05/04 ▸ 02/05 | 1K0959455EA | |
| 1.6 FSi 16V | 1K1/0/1/2 | E | 1598 | BAG,BLF,BLP | A | + | Left/gauche | 10/03 ▸ | 1K0959455BC | |
| 1.6 FSi 16V | 1K1/0/1/2 | E | 1598 | BAG,BLF,BLP | A | + | Left/gauche | 10/03 ▸ | 1K0959455P | |
| 1.6 FSi 16V | 1K1/0/1/2 | E | 1598 | BAG,BLF,BLP | A | + | Right/Droite | 10/03 ▸ | 1K0959455R | |
| 1.6 FSi 16V | 1K1/0/1/2 | E | 1598 | BAG,BLF,BLP | A | + | Right/Droite | 10/03 ▸ 07/08 | 1K0959455DG | |
| 1.6 FSi 16V | 1K1/0/1/2 | E | 1598 | BAG,BLF,BLP | A | + | Left/gauche | 10/03 ▸ 07/08 | 1K0959455EA | |
| 2.0 FSi 16V | 1K1/1/2/B | E | 1984 | AXW,BLR,BLX,BLY,BVX,BVY,BVZ | M | +/- | Left/gauche | 10/03 ▸ | 1K0959455P | |
| 2.0 FSi 16V | 1K1/1/2/B | E | 1984 | AXW,BLR,BLX,BLY,BVX,BVY,BVZ | M | +/- | Left/gauche | 10/03 ▸ 11/08 | 1K0959455EA | |
| 2.0 FSi 16V | 1K1/1/2 | E | 1984 | AXW,BLX,BLY | M | +/- | Right/Droite | 10/03 ▸ | 1K0959455R | |
| 2.0 FSi 16V | 1K1/1/2 | E | 1984 | AXW,BLX,BLY,BVX | M | +/- | Right/Droite | 10/03 ▸ 05/07 | 1K0959455DG | |
| 2.0 FSi 16V | 1K1/1/2/B | E | 1984 | AXW,BLR,BLX,BLY | M | +/- | Left/gauche | 10/03 ▸ | 1K0959455BC | |
| 2.0 FSi 16V,2.0 TFSi 16V | 1K52, 1K1/1/2/3/9/D | E | 1984 | AXX,BVX,BWA | M | +/- | Left/gauche | 09/04 ▸ 03/09 | 1K0959455DL | |
| 2.0 FSi 16V,2.0 TFSi 16V | 1K1/1/2/3 | E | 1984 | AXX,BVX,BWA | M | +/- | Left/gauche | 09/04 ▸ 05/07 | 1K0959455N | |
| 2.0 FSi 16V,2.0 TFSi 16V | 1K52, 1K1/1/2/3/9/D | E | 1984 | AXX,BWA,BYD | M | +/- | Right/Droite | 09/04 ▸ 03/09 | 1K0959455DH | |
| 2.0 TFSi 16V | 1K13 | E | 1984 | AXX | M | +/- | Right/Droite | 06/05 ▸ | 1K0959455Q | |
| 2.0 FSi 16V | 1K1/1/2/B | E | 1984 | BLR,BLY | M | + | Right/Droite | 06/05 ▸ 11/05 | 1K0959455DG | |
| 2.0 FSi 16V | 1K1/1/2/B | E | 1984 | BLY | M | + | Right/Droite | 06/05 ▸ | 1K0959455R | |
| 2.0 FSi 16V,2.0 TFSi 16V | 1K1/1/2/3/B | E | 1984 | AXW,AXX,BLR,BLY | M | - | Left/gauche | 10/03 ▸ 11/05 | 1K0959455DL | |
| 2.0 FSi 16V,2.0 TFSi 16V | 1K1/1/2/3 | E | 1984 | AXW,AXX,BLR,BLX | M | - | Right/Droite | 10/03 ▸ 11/05 | 1K0959455DH | |
| 2.0 FSi 16V,2.0 TFSi 16V | 1K1/1/2/3/B | E | 1984 | AXW,AXX,BLR,BLY | M | - | Left/gauche | 10/03 ▸ 11/05 | 1K0959455N | |
| 2.0 FSi 16V,2.0 TFSi 16V | 1K1/1/2/3 | E | 1984 | AXX,BLR,BLX | M | - | Right/Droite | 05/04 ▸ | 1K0959455Q | |
| 2.0 FSi 16V | 1K1/1/2 | E | 1984 | BLR | M | - | Right/Droite | 06/05 ▸ | 1K0959455R | |
| 2.0 FSi 16V | 1K1/1/2 | E | 1984 | BLR | M | - | Right/Droite | 06/05 ▸ 11/05 | 1K0959455DG | |
| 2.0 FSi 16V | 1K1/1/2/B | E | 1984 | BLY,BVX | A | +/- | Right/Droite | 05/04 ▸ 11/08 | 1K0959455DG | |
| 2.0 FSi 16V | 1K1/1/2/B | E | 1984 | BLR,BLX,BLY,BVX,BVY,BVZ | A | +/- | Left/gauche | 05/04 ▸ | 1K0959455P | |
| 2.0 FSi 16V | 1K1/1/2 | E | 1984 | BLY | A | +/- | Right/Droite | 05/04 ▸ | 1K0959455R | |
| 2.0 FSi 16V,2.0 TFSi 16V | 1K52, 1K1/1/2/3/9/D | E | 1984 | AXX,BLY,BWA | A | +/- | Left/gauche | 05/04 ▸ 03/09 | 1K0959455DL | |
| 2.0 FSi 16V,2.0 TFSi 16V | 1K1/1/2/3/D | E | 1984 | AXX,BLY,BWA | A | +/- | Left/gauche | 05/04 ▸ 05/07 | 1K0959455N | |
| 2.0 FSi 16V | 1K1/1/2/B | E | 1984 | BLR,BLX,BLY,BVX,BVY,BVZ | A | +/- | Left/gauche | 05/04 ▸ 11/08 | 1K0959455EA | |

# VOLKSWAGEN (.../...)

## GOLF V (2003>) (.../...)

| Type Ctr. | CC | | | AC | | | OE | Valeo | |
|---|---|---|---|---|---|---|---|---|---|
| 2.0 TFSi 16V 1K1/1/3 | E | 1984 | AXX | A | +/- | Right/Droite | 09/04 ▸ | 1K0959455Q | |
| 2.0 FSi 16V,2.0 TFSi 16V 1K52, 1K1/1/2/3/9/D | E | 1984 | AXX,BWA,BYD | A | +/- | Right/Droite | 09/04 ▸ 03/09 | 1K0959455DH | |
| 2.0 FSi 16V 1K1/1/2 | E | 1984 | AXW,BLR,BLX | A | + | Left/gauche | 10/03 ▸ 11/05 | 1K0959455DL | |
| 2.0 FSi 16V 1K1/1/2 | E | 1984 | AXW,BLR,BLX,BLY | A | + | Right/Droite | 10/03 ▸ | 1K0959455Q | |
| 2.0 FSi 16V 1K1/1/2 | E | 1984 | AXW,BLR,BLX | A | + | Left/gauche | 10/03 ▸ 11/05 | 1K0959455N | |
| 2.0 FSi 16V 1K1/1/2 | E | 1984 | AXW,BLR,BLX,BLY | A | + | Right/Droite | 10/03 ▸ 11/05 | 1K0959455DH | |
| 2.0 FSi 16V 1K1/1/2 | E | 1984 | AXW,BLR,BLX,BLY | A | - | Left/gauche | 10/03 ▸ | 1K0959455P | |
| 2.0 FSi 16V 1K1/1/2 | E | 1984 | AXW,BLR,BLX,BLY | A | - | Left/gauche | 10/03 ▸ 11/05 | 1K0959455EA | |
| 2.0 FSi 16V 1K1/1/2 | E | 1984 | AXW,BLR,BLX,BLY | A | - | | 10/03 ▸ | 1K0959455BC | |
| 2.0 FSi 16V 1K1/1/2 | E | 1984 | AXW,BLR,BLX | A | - | Right/Droite | 10/03 ▸ 11/05 | 1K0959455DG | |
| 2.0 FSi 16V 1K1/1/2 | E | 1984 | AXW,BLR,BLX | A | - | Right/Droite | 10/03 ▸ | 1K0959455R | |
| 2.0 FSi 16V,2.0 TFSi 16V 1K1/1/2/3 | E | 1984 | AXX,BLR,BLX | A | - | Right/Droite | 05/04 ▸ | 1K0959455Q | |
| 2.0 FSi 16V,2.0 TFSi 16V 1K1/1/2/3 | E | 1984 | AXX,BLR,BLX | A | - | Right/Droite | 05/04 ▸ 06/05 | 1K0959455DH | |
| 2.0 FSi 16V,2.0 TFSi 16V 1K1/1/2/3 | E | 1984 | AXX,BLR | A | - | Left/gauche | 09/04 ▸ 11/05 | 1K0959455N | |
| 2.0 FSi 16V,2.0 TFSi 16V 1K1/1/3 | E | 1984 | AXX,BLR | A | - | Left/gauche | 09/04 ▸ 11/05 | 1K0959455DL | |
| 2.0 FSi 16V 1K1/1/2 | E | 1984 | AXW | A | | Left/gauche | 01/04 ▸ 07/04 | 1K0959455N | |
| 2.0 FSi 16V 1K1/1/2 | E | 1984 | AXW | A | | Left/gauche | 01/04 ▸ 07/04 | 1K0959455DL | |
| 3.2 i VR6 24V 1K14 | E | 3189 | BUB | M | +/- | Left/gauche | 11/05 ▸ 05/07 | 1K0959455DL | |
| 3.2 i VR6 24V 1K14 | E | 3189 | BUB | M | +/- | Left/gauche | 11/05 ▸ 05/07 | 1K0959455N | |
| 3.2 i VR6 24V 1K14 | E | 3189 | BUB | M | | Right/Droite | 11/05 ▸ 11/08 | 1K0959455DH | |
| 3.2 i VR6 24V 1K14 | E | 3189 | BUB | A | +/- | Left/gauche | 08/05 ▸ 05/07 | 1K0959455N | |
| 3.2 i VR6 24V 1K14 | E | 3189 | BUB | A | +/- | Left/gauche | 08/05 ▸ 05/07 | 1K0959455DL | |
| 3.2 i VR6 24V 1K14 | E | 3189 | BUB | A | | Right/Droite | 08/05 ▸ 11/08 | 1K0959455DH | |
| 1.9 TDi 1K52, 1K1/0/1/2 | D | 1896 | BKC,BRU,BXE,BXF | M | +/- | Left/gauche | 10/03 ▸ | 1K0959455P | |
| 1.9 TDi 1K1/0/1/2, 1K5/0/1/2 | D | 1896 | BKC,BLS/F,BRU,BXE,BXF | M | +/- | Left/gauche | 10/03 ▸ | 1K0959455EA | |
| 1.9 TDi 1K1/0/1/2/B, 1K5/0/1/2 | D | 1896 | BLS/F,BXE | M | +/- | Right/Droite | 02/06 ▸ | 1K0959455DG | |
| 1.9 TDi 1K52, 1K1/0/1/2 | D | 1896 | BKC,BRU | M | + | Right/Droite | 10/03 ▸ 11/08 | 1K0959455DG | |
| 1.9 TDi 1K1/0/1/2 | D | 1896 | BKC,BRU | M | + | Left/gauche | 10/03 ▸ | 1K0959455BC | |
| 1.9 TDi 1K1/0/1/2 | D | 1896 | BKC,BRU | M | + | Left/gauche | 10/03 ▸ | 1K0959455P | |
| 1.9 TDi 1K1/0/1/2 | D | 1896 | BKC,BRU | M | + | Right/Droite | 10/03 ▸ | 1K0959455R | |
| 1.9 TDi 1K1/0/1/2/B, 1K5/0/1/2 | D | 1896 | BKC,BRU,BXE | M | + | Left/gauche | 08/04 ▸ 11/08 | 1K0959455EA | |
| 1.9 TDi 1K1/0/1/2 | D | 1896 | BXE | M | + | Right/Droite | 02/06 ▸ | 1K0959455DH | |
| 1.9 TDi 1K1/0/1/2 | D | 1896 | BXE | M | + | Left/gauche | 02/06 ▸ 05/07 | 1K0959455N | |
| 1.9 TDi 1K1/0/1/2 | D | 1896 | BXE | M | + | Left/gauche | 02/06 ▸ 05/07 | 1K0959455DL | |
| 1.9 TDi 1K1/0/1/2 | D | 1896 | BKC | M | | Left/gauche | 10/03 ▸ 06/05 | 1K0959455P | |
| 1.9 TDi 1K1/0/1/2 | D | 1896 | BKC | M | | Right/Droite | 10/03 ▸ 06/05 | 1K0959455R | |
| 1.9 TDi 1K1/0/1/2 | D | 1896 | BKC | M | | Left/gauche | 10/03 ▸ 06/05 | 1K0959455BC | |
| 1.9 TDi 1K1/0/1/2 | D | 1896 | BKC | M | | Right/Droite | 10/03 ▸ 06/05 | 1K0959455DG | |
| 1.9 TDi 1K1/0/1/2/B, 1K5/0/1/2 | D | 1896 | BKC,BLS/F,BXE | A | +/- | Left/gauche | 10/03 ▸ 11/08 | 1K0959455EA | |
| 1.9 TDi 1K1/0/1/2/B, 1K5/0/1/2 | D | 1896 | BLS/F,BXE | A | +/- | Right/Droite | 05/05 ▸ 11/08 | 1K0959455DG | |
| 1.9 TDi 1K1/0/1/2 | D | 1896 | BKC | A | + | Right/Droite | 10/03 ▸ | 1K0959455Q | |
| 1.9 TDi 1K1/0/1/2 | D | 1896 | BKC,BXE | A | + | Right/Droite | 10/03 ▸ 11/08 | 1K0959455DH | |
| 1.9 TDi 1K1/0/1/2 | D | 1896 | BKC,BXE | A | + | Left/gauche | 05/05 ▸ 05/07 | 1K0959455DL | |
| 1.9 TDi 1K1/0/1/2 | D | 1896 | BKC,BXE | A | + | Left/gauche | 05/05 ▸ 05/07 | 1K0959455N | |
| 1.9 TDi 1K1/1/B | D | 1896 | BXE | A | + | Left/gauche | 05/05 ▸ 11/08 | 1K0959455EA | |
| 1.9 TDi 1K1/0/1/2/B, 1K5/0/1/2 | D | 1896 | BLS | A | - | Right/Droite | 05/05 ▸ 11/08 | 1K0959455DG | |
| 1.9 TDi 1K1/0/1/2 | D | 1896 | BKC | A | | Left/gauche | 10/03 ▸ 06/05 | 1K0959455DL | |
| 1.9 TDi 1K1/0/1/2 | D | 1896 | BKC | A | | Left/gauche | 10/03 ▸ 06/05 | 1K0959455N | |
| 1.9 TDi 1K1/0/1/2 ▸ 1K-7-105 000 | D | 1896 | BKC,BXE | A | +/- | Left/gauche | 10/03 ▸ 03/07 | 1K0959455P | |
| 2.0 TDi,2.0 TDi 16V 1K1/0/1/2/B, 1K5/1/2 | D | 1968 | BKD,BMM/F | M | +/- | Right/Droite | 12/04 ▸ 11/08 | 1K0959455DG | |
| 2.0 TDi,2.0 TDi 16V 1K1/0/1/2/B, 1K5/1/2 | D | 1968 | BKD,BMM/F | M | +/- | Left/gauche | 12/04 ▸ 11/08 | 1K0959455EA | |
| 2.0 TDi,2.0 TDi 16V 1K1/0/1/2/B, 1K5/1/2 | D | 1968 | BKD,BMM/F | M | +/- | Left/gauche | 12/04 ▸ | 1K0959455P | |
| 2.0 TDi 16V 1K1/0/1/2/3/B | D | 1968 | AZV,BKD,BMN | M | + | Right/Droite | 10/03 ▸ 11/08 | 1K0959455DH | |
| 2.0 TDi 16V 1K1/0/1/2 | D | 1968 | AZV,BKD | M | + | Right/Droite | 10/03 ▸ | 1K0959455Q | |
| 2.0 SDi 1K1/0/1/2 | D | 1968 | BDK | M | + | Left/gauche | 01/04 ▸ | 1K0959455P | |
| 2.0 SDi 1K1/0/1/2 | D | 1968 | BDK | M | + | Right/Droite | 01/04 ▸ | 1K0959455R | |
| 2.0 SDi 1K1/0/1/2 | D | 1968 | BDK | M | + | Left/gauche | 01/04 ▸ | 1K0959455BC | |
| 2.0 SDi 1K1/0/1/2 | D | 1968 | BDK | M | + | Left/gauche | 01/04 ▸ 11/08 | 1K0959455EA | |
| 2.0 SDi 1K1/0/1/2 | D | 1968 | BDK | M | + | Right/Droite | 01/04 ▸ 11/08 | 1K0959455DG | |
| 2.0 TDi 16V 1K1/0/1/2/3/B | D | 1968 | AZV,BKD,BMN | M | + | Left/gauche | 05/04 ▸ 07/07 | 1K0959455DL | |
| 2.0 TDi 16V 1K1/0/1/2/3/B | D | 1968 | AZV,BKD,BMN | M | + | Left/gauche | 05/04 ▸ 07/07 | 1K0959455N | |
| 2.0 TDi 16V 1K1/0/1/2 | D | 1968 | AZV,BKD | M | - | Left/gauche | 10/03 ▸ | 1K0959455BC | |
| 2.0 TDi 16V 1K1/0/1/2 | D | 1968 | AZV,BKD | M | - | Right/Droite | 10/03 ▸ | 1K0959455R | |
| 2.0 TDi 16V 1K52, 1K1/0/1/2/3/B | D | 1968 | AZV,BKD,BMN,BVB | M | - | Right/Droite | 10/03 ▸ 11/08 | 1K0959455DG | |

Fan Motor + Blades Moteur + hélice Lüftermotor + Lüfterrad Motorino + Ventola Ventilatormotor Fan motoru + Kanatlar
Moto-ventilador + Aspas Motor sahary + vrtule Ventilátor motor és lapát Motor ventilatora + lopasti ventilatora Ventilator motor + Lame Motér ανεμιστήρων + Πτερωτές



• **New** Nouveau **Nuevo** Novo **Nuovo** Nieuw **Neu** Nowość **Yeni** Новый Νέο **Novy**

# VOLKSWAGEN (.../...)

## GOLF V (2003>) (.../...)

| | | | CC | | | AC | | | | | |
|---|---|---|---|---|---|---|---|---|---|---|---|
| 2.0 TDi 16V | 1K1/0/1/2/B, 1K5/1/2 | D | 1968 | AZV,BKD,BVB | M | - | Left/gauche | 10/03 ▸ | 1K0959455P | | |
| 2.0 TDi 16V | 1K1/0/1/2/B, 1K5/1/2 | D | 1968 | AZV,BKD,BVB | M | - | Left/gauche | 10/03 ▸ 11/08 | 1K0959455EA | | |
| 2.0 TDi 16V | 1K1/0/1/2 | D | 1968 | AZV,BKD | M | | | 10/03 ▸ 05/04 | 1K0959455N | | |
| 2.0 TDi 16V | 1K1/0/1/2 | D | 1968 | AZV,BKD | M | | | 10/03 ▸ 05/04 | 1K0959455DL | | |
| 2.0 TDi,2.0 TDi 16V | 1K1/B, 1K5/1/2 | D | 1968 | BKD,BMM/F | A | +/- | Left/gauche | 06/05 ▸ | 1K0959455P | | |
| 2.0 TDi,2.0 TDi 16V | 1K1/B, 1K5/1/2 | D | 1968 | BKD,BMM/F | A | +/- | Right/Droite | 06/05 ▸ 11/08 | 1K0959455DG | | |
| 2.0 TDi,2.0 TDi 16V | 1K1/B, 1K5/1/2 | D | 1968 | BKD,BMM/F | A | +/- | Left/gauche | 06/05 ▸ 11/08 | 1K0959455EA | | |
| 2.0 TDi 16V | 1K1/0/1/2 | D | 1968 | AZV,BKD | A | + | Right/Droite | 10/03 ▸ | 1K0959455Q | | |
| 2.0 TDi 16V | 1K1/0/1/2/3/B | D | 1968 | AZV,BKD,BMN | A | + | Left/gauche | 10/03 ▸ 07/07 | 1K0959455N | | |
| 2.0 TDi 16V | 1K1/0/1/2/3/B | D | 1968 | AZV,BKD,BMN | A | + | Left/gauche | 10/03 ▸ 07/07 | 1K0959455DL | | |
| 2.0 TDi 16V | 1K1/0/1/2/3/B | D | 1968 | AZV,BKD,BMN | A | + | Right/Droite | 10/03 ▸ 11/08 | 1K0959455DH | | |
| 2.0 TDi 16V | 1K1/0/1/2 | D | 1968 | AZV,BKD | A | - | Left/gauche | 10/03 ▸ 11/08 | 1K0959455EA | | |
| 2.0 TDi 16V | 1K1/0/1/2 | D | 1968 | AZV,BKD | A | - | Left/gauche | 10/03 ▸ | 1K0959455P | | |
| 2.0 TDi 16V | 1K1/0/1/2/3/B | D | 1968 | AZV,BKD,BMN | A | - | Right/Droite | 10/03 ▸ 11/08 | 1K0959455DG | | |
| 2.0 TDi 16V | 1K1/0/1/2 | D | 1968 | AZV,BKD | A | - | Left/gauche | 10/03 ▸ | 1K0959455BC | | |
| 2.0 TDi 16V | 1K1/0/1/2 | D | 1968 | AZV,BKD | A | - | Right/Droite | 10/03 ▸ | 1K0959455R | | |
| 2.0 TDi 16V | 1K1/0/1/2 | D | 1968 | BKD | A | | | 10/03 ▸ 05/04 | 1K0959455DL | | |
| 2.0 TDi 16V | 1K1/0/1/2 | D | 1968 | BKD | A | | | 10/03 ▸ 05/04 | 1K0959455N | | |

## GOLF V PLUS (2005>)

| | | | | | | | | | | | |
|---|---|---|---|---|---|---|---|---|---|---|---|
| 1.4 FSi 16V,1.4 i 16V | 5M1/0/1/2 | E | 1390 | BCA,BLN | M | + | Left/gauche | 01/05 ▸ | 1K0959455P | | |
| 1.4 FSi 16V,1.4 i 16V | 5M1/0/1/2 | E | 1390 | BCA,BLN | M | + | Left/gauche | 01/05 ▸ | 1K0959455BC | | |
| 1.4 FSi 16V,1.4 i 16V | 5M1/0/1/2 | E | 1390 | BCA,BLN | M | + | Left/gauche | 01/05 ▸ 05/06 | 1K0959455EA | | |
| 1.4 FSi 16V,1.4 i 16V | 5M1/0/1/2 | E | 1390 | BCA,BLN | M | + | Right/Droite | 01/05 ▸ | 1K0959455R | | |
| 1.4 FSi 16V,1.4 i 16V | 5M1/0/1/2 | E | 1390 | BCA,BLN | M | + | Right/Droite | 06/05 ▸ 05/06 | 1K0959455DG | | |
| 1.6 i | 5M1/0/1/2 | E | 1595 | BSE,BSF | M | + | Right/Droite | 05/05 ▸ | 1K0959455DG | | |
| 1.6 i | 5M1/0/1/2 | E | 1595 | BSE,BSF | A | + | Right/Droite | 05/05 ▸ | 1K0959455DG | | |
| 1.6 FSi 16V | 5M1/0/1/2 | E | 1598 | BLF | M | + | Right/Droite | 01/05 ▸ 01/09 | 1K0959455DG | | |
| 1.6 FSi 16V | 5M1/0/1/2 | E | 1598 | BLF | M | + | Left/gauche | 01/05 ▸ | 1K0959455BC | | |
| 1.6 FSi 16V | 5M1/1/2 | E | 1598 | BLF | M | + | Right/Droite | 01/05 ▸ | 1K0959455R | | |
| 1.6 FSi 16V | 5M1/0/1/2 | E | 1598 | BLF | M | + | Left/gauche | 01/05 ▸ 01/09 | 1K0959455EA | | |
| 1.6 FSi 16V | 5M1/0/1/2 | E | 1598 | BLF | M | + | Left/gauche | 01/05 ▸ | 1K0959455P | | |
| 1.6 FSi 16V | 5M1/0/1/2 | E | 1598 | BLF | A | + | Left/gauche | 04/05 ▸ | 1K0959455BC | | |
| 1.6 FSi 16V<br>1k-6-500 001 ▸ | 5M1/0/1/2 | E | 1598 | BLF | A | + | Right/Droite | 04/05 ▸ 05/08 | 1K0959455DG | | |
| 1.6 FSi 16V | 5M1/0/1/2 | E | 1598 | BLF | A | + | Left/gauche | 04/05 ▸ 05/08 | 1K0959455EA | | |
| 1.6 FSi 16V | 5M1/0/1/2 | E | 1598 | BLF | A | + | Left/gauche | 04/05 ▸ | 1K0959455P | | |
| 1.6 FSi 16V | 5M1/0/1/2 | E | 1598 | BLF | A | + | Right/Droite | 04/05 ▸ | 1K0959455R | | |
| 2.0 FSi 16V | 5M1/1/2 | E | 1984 | BLR | M | +/- | Left/gauche | 01/05 ▸ 11/05 | 1K0959455N | | |
| 2.0 FSi 16V | 5M1/1/2 | E | 1984 | BLR | M | +/- | Left/gauche | 01/05 ▸ 11/05 | 1K0959455DL | | |
| 2.0 FSi 16V<br>1K-6-500 001 ▸ | 5M1/1/2 | E | 1984 | BLR,BLY | M | + | Right/Droite | 01/05 ▸ 11/05 | 1K0959455DG | | |
| 2.0 FSi 16V | 5M1/1/2 | E | 1984 | BLY,BVZ | M | + | Left/gauche | 01/05 ▸ 06/08 | 1K0959455DL | | |
| 2.0 FSi 16V | 5M1/1/2 | E | 1984 | BLY,BVZ | M | + | Left/gauche | 01/05 ▸ | 1K0959455N | | |
| 2.0 FSi 16V | 5M1/1/2 | E | 1984 | BLY | M | + | Left/gauche | 01/05 ▸ 11/05 | 1K0959455P | | |
| 2.0 FSi 16V | 5M1/1/2 | E | 1984 | BLR,BLY | M | + | Right/Droite | 01/05 ▸ 11/05 | 1K0959455DH | | |
| 2.0 FSi 16V | 5M1/1/2 | E | 1984 | BLY | M | + | Left/gauche | 01/05 ▸ 11/05 | 1K0959455EA | | |
| 2.0 FSi 16V<br>1K-6-500 001 ▸ | 5M1/1/2 | E | 1984 | BLR,BVY,BVZ | M | - | Left/gauche | 05/05 ▸ | 1K0959455P | | |
| 2.0 FSi 16V | 5M1/1/2 | E | 1984 | BLR,BVY,BVZ | M | - | Left/gauche | 05/05 ▸ 06/08 | 1K0959455EA | | |
| 2.0 FSi 16V | 5M1/1/2 | E | 1984 | BVY,BVZ | M | - | Right/Droite | 11/05 ▸ 06/08 | 1K0959455DG | | |
| 2.0 FSi 16V | 5M1/1/2 | E | 1984 | BVY | M | - | Left/gauche | 11/05 ▸ 06/08 | 1K0959455DL | | |
| 2.0 FSi 16V | 5M1/1/2 | E | 1984 | BVY | M | - | Left/gauche | 11/05 ▸ | 1K0959455N | | |
| 2.0 FSi 16V | 5M1/1/2 | E | 1984 | BVZ | A | +/- | | 11/05 ▸ 06/08 | 1K0959455DL | | |
| 2.0 FSi 16V | 5M1/1/2 | E | 1984 | BVZ | A | +/- | | 11/05 ▸ | 1K0959455N | | |
| 2.0 FSi 16V | 5M1/1/2 | E | 1984 | BLR,BLY | A | + | Right/Droite | 01/05 ▸ 11/05 | 1K0959455DH | | |
| 2.0 FSi 16V | 5M1/1/2 | E | 1984 | BLR,BLY | A | + | Left/gauche | 01/05 ▸ 11/05 | 1K0959455N | | |
| 2.0 FSi 16V | 5M1/1/2 | E | 1984 | BLR,BLY | A | + | Left/gauche | 01/05 ▸ 11/05 | 1K0959455DL | | |
| 2.0 FSi 16V<br>1K-6-500 001 ▸ | 5M1/1/2 | E | 1984 | BLR | A | + | Left/gauche | 05/05 ▸ 11/05 | 1K0959455P | | |
| 2.0 FSi 16V<br>1K-6-500 001 ▸ | 5M1/1/2 | E | 1984 | BLR | A | + | Left/gauche | 05/05 ▸ 11/05 | 1K0959455EA | | |
| 2.0 FSi 16V | 5M1/1/2 | E | 1984 | BLY,BVY,BVZ | A | - | Left/gauche | 01/05 ▸ 06/08 | 1K0959455EA | | |
| 2.0 FSi 16V | 5M1/1/2 | E | 1984 | BLY,BVY,BVZ | A | - | Left/gauche | 01/05 ▸ | 1K0959455P | | |
| 2.0 FSi 16V | 5M1/1/2 | E | 1984 | BLR,BVY,BVZ | A | - | Right/Droite | 01/05 ▸ 06/08 | 1K0959455DG | | |
| 2.0 FSi 16V | 5M1/1/2 | E | 1984 | BVY | A | - | Left/gauche | 11/05 ▸ | 1K0959455N | | |
| 2.0 FSi 16V | 5M1/1/2 | E | 1984 | BVY | A | - | Left/gauche | 11/05 ▸ 06/08 | 1K0959455DL | | |
| 1.9 TDi | 5M1/0/1/2 | D | 1896 | BKC | M | +/- | Left/gauche | 01/05 ▸ 05/06 | 1K0959455EA | | |
| 1.9 TDi | 5M1/0/1/2 | D | 1896 | BKC | M | +/- | Left/gauche | 01/05 ▸ | 1K0959455P | | |
| 1.9 TDi | 5M1/0/1/2 | D | 1896 | BKC,BLS | M | + | | 01/05 ▸ | 1K0959455P | | |

# VOLKSWAGEN (.../...)

## GOLF V PLUS (2005>) (.../...)

| Type Ctr. | | CC | | AC | | | | OE | Valeo | |
|---|---|---|---|---|---|---|---|---|---|---|
| 1.9 TDi | 5M1/0/1/2 | D | 1896 | BKC | M | + | | 01/05 ▸ | 1K0959455BC | |
| 1.9 TDi | 5M1/0/1/2 | D | 1896 | BKC | M | + | Right/Droite | 01/05 ▸ | 1K0959455R | |
| 1.9 TDi | 5M1/0/1/2 | D | 1896 | BKC,BLS | M | + | Right/Droite | 01/05 ▸ 01/09 | 1K0959455DG | |
| 1.9 TDi | 5M1/0/1/2 | D | 1896 | BKC,BLS | M | + | Left/gauche | 01/05 ▸ 01/09 | 1K0959455EA | |
| 1.9 TDi | 5M1/0/1/2 | D | 1896 | BLS | M | + | Left/gauche | 06/05 ▸ 01/09 | 1K0959455DL | |
| 1.9 TDi | 5M1/0/1/2 | D | 1896 | BLS | M | + | Left/gauche | 06/05 ▸ | 1K0959455N | |
| 1.9 TDi | 5M1/0/1/2 | D | 1896 | BLS | M | + | Right/Droite | 06/05 ▸ 01/09 | 1K0959455DH | |
| 1.9 TDi | 5M1/0/1/2 | D | 1896 | BLS,BRU | M | - | Right/Droite | 05/05 ▸ 01/09 | 1K0959455DG | |
| 1.9 TDi | 5M1/0/1/2 | D | 1896 | BLS,BRU | M | - | Left/gauche | 05/05 ▸ 01/09 | 1K0959455EA | |
| 1.9 TDi | 5M1/0/1/2 | D | 1896 | BLS,BRU | M | - | Left/gauche | 05/05 ▸ | 1K0959455P | |
| 1.9 TDi | 5M1/0/1/2 | D | 1896 | BKC | A | +/- | Left/gauche | 01/05 ▸ | 1K0959455P | |
| 1.9 TDi | 5M1/0/1/2 | D | 1896 | BKC | A | +/- | Left/gauche | 01/05 ▸ 02/06 | 1K0959455EA | |
| 1.9 TDi | 5M1/0/1/2 | D | 1896 | BKC | A | + | Right/Droite | 01/05 ▸ | 1K09594550 | |
| 1.9 TDi | 5M1/0/1/2 | D | 1896 | BKC,BLS | A | + | Left/gauche | 01/05 ▸ | 1K0959455N | |
| 1.9 TDi | 5M1/0/1/2 | D | 1896 | BKC,BLS | A | + | Right/Droite | 01/05 ▸ 05/08 | 1K0959455DH | |
| 1.9 TDi | 5M1/0/1/2 | D | 1896 | BKC,BLS | A | + | Left/gauche | 01/05 ▸ 05/08 | 1K0959455DL | |
| 1.9 TDi | 5M12 | D | 1896 | BLS | A | + | Left/gauche | 06/05 ▸ 05/08 | 1K0959455EA | |
| 1.9 TDi | 5M12 | D | 1896 | BLS | A | + | Left/gauche | 06/05 ▸ | 1K0959455P | |
| 1.9 TDi | 5M12 | D | 1896 | BLS | A | - | Right/Droite | 06/05 ▸ 05/08 | 1K0959455DG | |
| 1.9 TDi | 5M12 | D | 1896 | BLS | A | - | Left/gauche | 06/05 ▸ | 1K0959455P | |
| 2.0 TDi,2.0 TDi 16V | 5M1/0/1/2 | D | 1968 | AZV,BEE,BKD,BMM/F | M | +/- | Right/Droite | 01/05 ▸ | 1K0959455DG | |
| 2.0 TDi,2.0 TDi 16V | 5M1/0/1/2 | D | 1968 | AZV,BEE,BKD,BMM/F | M | +/- | Left/gauche | 01/05 ▸ | 1K0959455P | |
| 2.0 TDi,2.0 TDi 16V | 5M1/0/1/2 | D | 1968 | AZV,BEE,BKD,BMM/F | M | +/- | Left/gauche | 01/05 ▸ | 1K0959455EA | |
| 2.0 TDi,2.0 TDi 16V | 5M1/0/1/2 | D | 1968 | AZV,BEE,BKD,BMM/F | M | + | Left/gauche | 01/05 ▸ | 1K0959455N | |
| 2.0 TDi,2.0 TDi 16V | 5M1/0/1/2 | D | 1968 | AZV,BEE,BKD,BMM/F | M | + | | 01/05 ▸ | 1K0959455DL | |
| 2.0 TDi,2.0 TDi 16V | 5M1/0/1/2 | D | 1968 | AZV,BEE,BMM/F | M | + | Right/Droite | 01/05 ▸ | 1K0959455DH | |
| 2.0 TDi 16V | 5M1/0/1/2 | D | 1968 | BKD | M | - | | 01/05 ▸ | 1K0959455P | |
| 2.0 TDi 16V | 5M1/0/1/2 | D | 1968 | BKD | M | - | Right/Droite | 01/05 ▸ | 1K0959455R | |
| 2.0 TDi 16V | 5M1/0/1/2 | D | 1968 | BKD | M | - | | 01/05 ▸ | 1K0959455BC | |
| 2.0 TDi 16V | 5M1/0/1/2 | D | 1968 | BKD | M | - | Right/Droite | 01/05 ▸ 05/07 | 1K0959455DG | |
| 2.0 TDi 16V | 5M1/0/1/2 | D | 1968 | AZV,BKD | A | +/- | Left/gauche | 01/05 ▸ | 1K0959455P | |
| 2.0 TDi 16V | 5M1/0/1/2 | D | 1968 | AZV,BKD | A | +/- | Right/Droite | 01/05 ▸ 01/09 | 1K0959455DG | |
| 2.0 TDi 16V | 5M1/0/1/2 | D | 1968 | AZV,BKD | A | +/- | Left/gauche | 05/05 ▸ 01/09 | 1K0959455EA | |
| 2.0 TDi 16V | 5M1/0/1/2 | D | 1968 | AZV,BKD | A | + | Left/gauche | 01/05 ▸ 01/09 | 1K0959455DL | |
| 2.0 TDi 16V | 5M1/0/1/2 | D | 1968 | AZV,BKD | A | + | Left/gauche | 01/05 ▸ | 1K0959455N | |
| 2.0 TDi 16V | 5M1/0/1/2 | D | 1968 | AZV | A | + | Right/Droite | 05/05 ▸ 05/07 | 1K0959455DH | |
| 2.0 TDi 16V | 5M1/0/1/2 | D | 1968 | BKD | A | - | Right/Droite | 01/05 ▸ | 1K0959455R | |
| 2.0 TDi 16V | 5M1/0/1/2 | D | 1968 | BKD | A | - | | 01/05 ▸ | 1K0959455P | |
| 2.0 TDi 16V | 5M1/0/1/2 | D | 1968 | BKD | A | - | | 01/05 ▸ | 1K0959455BC | |
| 2.0 TDi 16V | 5M1/0/1/2 | D | 1968 | BKD | A | - | | 01/05 ▸ 05/06 | 1K0959455EA | |
| 2.0 TDi 16V | 5M1/0/2 | D | 1968 | BKD | A | - | Right/Droite | 01/05 ▸ 05/06 | 1K0959455DG | |

## GOLF VI (2008>)

| | | | | | | | | | | |
|---|---|---|---|---|---|---|---|---|---|---|
| 1.6 i | 5K1/2/3/4 | F | 1595 | CHGA | M | + | Left/gauche | 03/09 ▸ | 1K0959455EA | |
| 1.4 TFSi | 5K1/2/3/4 | E | 1390 | CAXA | M | +/- | | 10/08 ▸ | 1K0959455EA | |
| 1.4 TSi | 5K1/3/4 | E | 1390 | CAVD | M | - | Left/gauche | 11/08 ▸ | 1K0959455EA | |
| 1.4 TFSi | 5K1/2/3/4 | E | 1390 | CAXA | A | +/- | | 10/08 ▸ | 1K0959455EA | |
| 1.4 TSi | 5K1/3/4 | E | 1390 | CAVD | A | - | Left/gauche | 10/08 ▸ | 1K0959455EA | |
| 1.6 i | 5K1/2/3/4 | E | 1595 | BSE,BSF,CCSA | M | + | Left/gauche | 10/08 ▸ 05/11 | 1K0959455EA | |
| 1.6 i | 5K1/2/3/4 | E | 1595 | BSE,BSF | A | + | Left/gauche | 10/08 ▸ | 1K0959455EA | |
| 2.0 TDI 16V | 5K1/2/3/4 | D | 1968 | CBAA/F,CBAB/F,CBDC/F | M | - | Left/gauche | 10/08 ▸ | 1K0959455EA | |
| 2.0 TDI 16V | 5K1/2/3/4 | D | 1968 | CBAB/F,CBDC/F | A | - | Left/gauche | 10/08 ▸ 11/09 | 1K0959455EA | |

## JETTA II (83>92)

| | | | | | | | | | | |
|---|---|---|---|---|---|---|---|---|---|---|
| 1.6 | 165/0/1/2/G/H/J, 167/0/1/2/G/H/J, 1G2/2/3 | E | 1595 | PN | M | - | | 08/86 ▸ 07/92 | 165959455L | **696031** |
| 1.6 | 165/0/1/2/G/H/J, 167/0/1/2/G/H/J, 1G2/2/3 | E | 1595 | PN | M | - | | 08/86 ▸ 07/92 | 165959455T | **698368** |
| 1.6 | 1G2/2/3 | E | 1595 | PN | A | - | | 08/88 ▸ 07/92 | 165959455T | **698368** |
| 1.6 | 1G2/2/3 | E | 1595 | PN | A | - | | 08/88 ▸ 07/92 | 165959455L | **696031** |
| 1.8,1.8 i | 165/0/1/2/G/H/J/S/T 167/0/1/2/7/G/H/J/K/S/T, 168/2/7, 1G2/2/3/5 | E | 1781 | GU,GX,RP | M | - | | 01/84 ▸ 10/91 | 165959455L | **696031** |
| 1.8,1.8 i | 165/0/1/2/G/H/J/S/T 167/0/1/2/7/G/H/J/K/S/T/U/V/Z, 168/2/7/U/V Z, 1G2/2/3/5 | E | 1781 | GU,GX,RP | M | - | | 01/84 ▸ 10/91 | 165959455T | **698368** |
| 1.8,1.8 i | 165/0/1/2/G/H/J, 167 0/1/2/7/G/H/J/K, 168/0/2/7, 1G2/2/3 | E | 1781 | GU,GX,RP | A | - | | 01/84 ▸ 10/91 | 165959455L | **696031** |
| 1.8,1.8 i | 165/0/1/2/G/H/J, 167 0/1/2/7/G/H/J/K, 168/0/2/7, 1G2/2/3 | E | 1781 | GU,GX,RP | A | - | | 01/84 ▸ 10/91 | 165959455T | **698368** |
| 1.6 D | 165/0/1/2, 167/0/1/2, 168/0/1, 1G2/2/3 | D | 1588 | JP | M | - | | 08/83 ▸ 07/90 | 165959455L | **696031** |

Fan Motor + Blades Moteur + hélice Lüftermotor + Lüfterrad Motorino + Ventola Ventilatormotor Fan motoru + Kanatlar
Moto-ventilador + Aspas Motor вентилятора + лопасти вентилятора Ventilátor motor és lapát Motor sahary + vrtule Ventilator motor + Lame Μοτέρ ανεμιστήρων + Πτερωτές



• **New** Nouveau **Nuevo** Novo **Nuovo** Nieuw **Neu** Nowość **Yeni** Новый Νέο **Novy**

# VOLKSWAGEN (.../...)

## JETTA II (83>92) (.../...)

| | | | CC | | | AC | | | OE | Valeo | |
|---|---|---|---|---|---|---|---|---|---|---|---|
| 1.6 D | 165/0/1/2, 167/0/1/2, 1G2/2/3 | D | 1588 | JP | A | - | | 08/83 ▸ 07/90 | 165959455L | 696031 | |

## JETTA (2005>2010)

| | | | | | | | | | | | |
|---|---|---|---|---|---|---|---|---|---|---|---|
| 1.4 TSi 16V | 1K2/1/2 | E | 1390 | BMY | M | + | Right/Droite | 07/06 ▸ 06/08 | 1K0959455DG | | |
| 1.4 TSi 16V | 1K2/1/2 | E | 1390 | BMY | M | + | Left/gauche | 07/06 ▸ 06/08 | 1K0959455EA | | |
| 1.4 TSi 16V | 1K2/1/2 | E | 1390 | BLG,BMY | M | + | Left/gauche | 07/06 ▸ | 1K0959455P | | |
| 1.4 TSi 16V | 1K2/1/2 | E | 1390 | CAVD | M | | Left/gauche | 07/08 ▸ 10/10 | 1K0959455EA | | |
| 1.4 TSi 16V | 1K2/1/2 | E | 1390 | BMY | A | + | Right/Droite | 07/06 ▸ 06/08 | 1K0959455DG | | |
| 1.4 TSi 16V | 1K2/1/2 | E | 1390 | BLG,BMY | A | + | Left/gauche | 07/06 ▸ | 1K0959455P | | |
| 1.4 TSi 16V | 1K2/1/2 | E | 1390 | BMY | A | + | Left/gauche | 07/06 ▸ 06/08 | 1K0959455EA | | |
| 1.4 TSi 16V | 1K2/1/2 | E | 1390 | CAVD | A | | Left/gauche | 07/08 ▸ 10/10 | 1K0959455EA | | |
| 1.4 TSi 16V ▸ 1K-8-132 030 | 1K2/0/1/2 | E | 1390 | BLG,BMY,CAXA | M | + | | 07/06 ▸ 01/08 | 1K0959455DH | | |
| 1.4 TSi 16V ▸ 1K-8-132 030 | 1K2/1/2 | E | 1390 | BLG,BMY | M | + | Left/gauche | 07/06 ▸ 01/08 | 1K0959455DL | | |
| 1.4 TSi 16V ▸ 1K-8-132 030 | 1K2/0/1/2 | E | 1390 | CAXA | M | | Left/gauche | 07/07 ▸ 01/08 | 1K0959455DL | | |
| 1.4 TSi 16V ▸ 1K-8-132 030 | 1K2/0/1/2 | E | 1390 | BLG,BMY,CAXA | A | + | Right/Droite | 07/06 ▸ 01/08 | 1K0959455DH | | |
| 1.4 TSi 16V ▸ 1K-8-132 030 | 1K2/1/2 | E | 1390 | BLG,BMY | A | + | Left/gauche | 07/06 ▸ 01/08 | 1K0959455DL | | |
| 1.4 TSi 16V ▸ 1K-8-132 030 | 1K2/0/1/2 | E | 1390 | CAXA | A | | Left/gauche | 10/07 ▸ 01/08 | 1K0959455DL | | |
| 1.6 i | 1K2/0/1/2 | E | 1595 | BSE,BSF | M | + | Left/gauche | 08/05 ▸ | 1K0959455P | | |
| 1.6 i | 1K2/0/1/2 | E | 1595 | BSE,BSF,CCSA | M | + | | 08/05 ▸ 06/09 | 1K0959455EA | | |
| 1.6 i | 1K2/0/1/2 | E | 1595 | BSF | M | + | Left/gauche | 10/05 ▸ | 1K0959455N | | |
| 1.6 i | 1K2/0/1/2 | E | 1595 | BSF | M | + | Left/gauche | 10/05 ▸ 06/09 | 1K0959455DL | | |
| 1.6 i | 1K2/0/1/2 | E | 1595 | BSF | A | + | Left/gauche | 10/05 ▸ | 1K0959455N | | |
| 1.6 i | 1K2/0/1/2 | E | 1595 | BSE,BSF | A | + | Left/gauche | 10/05 ▸ 06/08 | 1K0959455EA | | |
| 1.6 i | 1K2/0/1/2 | E | 1595 | BSE,BSF | A | + | Left/gauche | 10/05 ▸ | 1K0959455P | | |
| 1.6 i | 1K2/0/1/2 | E | 1595 | BSF | A | + | Left/gauche | 10/05 ▸ 06/08 | 1K0959455DL | | |
| 1.6 i | 1K20 | E | 1595 | BSE | A | | | 12/08 ▸ 10/10 | 1K0959455EA | | |
| 1.6 i ▸ 1K-8-132 030 | 1K2/0/1/2 | E | 1595 | BSE,BSF | M | + | Right/Droite | 08/05 ▸ 01/08 | 1K0959455DG | | |
| 1.6 i ▸ 1K-8-132 030 | 1K2/0/1/2 | E | 1595 | BSE,BSF | A | + | Right/Droite | 10/05 ▸ 10/10 | 1K0959455DG | | |
| 1.6 FSI 16V | 1K2/0/1/2 | E | 1598 | BLF | M | + | Left/gauche | 09/05 ▸ | 1K0959455P | | |
| 1.6 FSI 16V | 1K2/0/1/2 | E | 1598 | BLF | M | + | Right/Droite | 09/05 ▸ 06/08 | 1K0959455DG | | |
| 1.6 FSI 16V | 1K2/0/1/2 | E | 1598 | BLF | M | + | Left/gauche | 09/05 ▸ 06/08 | 1K0959455EA | | |
| 2.0 FSi 16V,2.0 TFSI 16V | 1K2/1/2 | E | 1984 | BLR,BLY,BVY,BVZ,BWA | M | + | Right/Droite | 08/05 ▸ 01/08 | 1K0959455DH | | |
| 2.0 FSi 16V,2.0 TFSI 16V | 1K2/1/2 | E | 1984 | BLR,BLY,BVY,BVZ,BWA | M | + | Left/gauche | 08/05 ▸ 06/08 | 1K0959455DL | | |
| 2.0 FSI 16V,2.0 TFSI 16V | 1K22 | E | 1984 | BVY,BVZ,BWA | M | + | Left/gauche | 09/05 ▸ | 1K0959455N | | |
| 2.0 FSI 16V,2.0 TFSI 16V | 1K2/1/2 | E | 1984 | BVY,BVZ,BWA | A | + | Left/gauche | 10/05 ▸ | 1K0959455N | | |
| 2.0 FSi 16V,2.0 TFSI 16V | 1K2/1/2 | E | 1984 | BLR,BLY,BVY,BVZ,BWA | A | + | Right/Droite | 10/05 ▸ 01/08 | 1K0959455DH | | |
| 2.0 FSi 16V,2.0 TFSI 16V | 1K2/1/2 | E | 1984 | BLR,BLY,BVY,BVZ,BWA | A | + | Left/gauche | 10/05 ▸ 06/08 | 1K0959455DL | | |
| 2.5 i 20V | 1K2/1/2 | E | 2480 | BTK | M | + | Right/Droite | 09/06 ▸ 06/07 | 1K0959455DH | | |
| 2.5 i 20V | 1K2/1/2 | E | 2480 | BTK | M | + | Left/gauche | 09/06 ▸ | 1K0959455N | | |
| 2.5 i 20V | 1K2/1/2 | E | 2480 | BTK | M | + | Left/gauche | 09/06 ▸ 06/07 | 1K0959455DL | | |
| 2.5 i 20V | 1K2/1/2 | E | 2480 | BTK | A | + | Right/Droite | 09/06 ▸ 06/07 | 1K0959455DH | | |
| 2.5 i 20V | 1K2/1/2 | E | 2480 | BTK | A | + | Left/gauche | 09/06 ▸ | 1K0959455N | | |
| 2.5 i 20V | 1K2/1/2 | E | 2480 | BTK | A | + | Left/gauche | 09/06 ▸ 06/07 | 1K0959455DL | | |
| 1.9 TDI | 1K2/0/1/2 | D | 1896 | BKC,BLS,BXE | M | + | Left/gauche | 08/05 ▸ 06/08 | 1K0959455DL | | |
| 1.9 TDI | 1K2/0/1/2 | D | 1896 | BKC,BLS | M | + | Left/gauche | 08/05 ▸ | 1K0959455N | | |
| 1.9 TDI | 1K2/0/1/2 | D | 1896 | BKC,BLS,BXE | M | + | Right/Droite | 08/05 ▸ 01/08 | 1K0959455DH | | |
| 1.9 TDI ▸ 1K-8-132 031 ▸ | 1K2/0/1/2 | D | 1896 | BLS | M | + | Left/gauche | 01/08 ▸ | 1K0959455EA | | |
| 1.9 TDI | 1K2/0/1/2 | D | 1896 | BKC,BLS | A | + | Left/gauche | 09/05 ▸ | 1K0959455N | | |
| 1.9 TDI | 1K2/0/1/2 | D | 1896 | BKC,BLS,BXE | A | + | Right/Droite | 09/05 ▸ 01/08 | 1K0959455DH | | |
| 1.9 TDI | 1K2/0/1/2 | D | 1896 | BKC,BLS,BXE | A | + | Left/gauche | 09/05 ▸ 06/08 | 1K0959455DL | | |
| 1.9 TDI ▸ 1K-8-132 031 ▸ | 1K2/0/1/2 | D | 1896 | BLS | A | + | Left/gauche | 01/08 ▸ 06/08 | 1K0959455EA | | |
| 2.0 TDi,2.0 TDi 16V | 1K2/0/1/2 | D | 1968 | AZV,BKD,BMM/F | M | + | Left/gauche | 08/05 ▸ | 1K0959455N | | |
| 2.0 TDi 16V | 1K2/1/2 | D | 1968 | CBDB/F | M | + | Left/gauche | 07/08 ▸ 10/10 | 1K0959455EA | | |
| 2.0 TDi,2.0 TDi 16V | 1K2/0/1/2 | D | 1968 | AZV,BKD,BMM/F | A | + | Left/gauche | 09/05 ▸ | 1K0959455N | | |
| 2.0 TDi 16V | 1K2/1/2 | D | 1968 | CBDB/F | A | + | Left/gauche | 07/08 ▸ 10/10 | 1K0959455EA | | |
| 2.0 TDi,2.0 TDi 16V ▸ 1K-8-132 030 | 1K2/0/1/2 | D | 1968 | AZV,BKD,BMM/F,BMN | M | + | Right/Droite | 08/05 ▸ 01/08 | 1K0959455DH | | |
| 2.0 TDi,2.0 TDi 16V ▸ 1K-8-132 030 | 1K2/0/1/2 | D | 1968 | AZV,BKD,BMM/F,BMN | M | + | Left/gauche | 08/05 ▸ 06/08 | 1K0959455DL | | |

# VOLKSWAGEN (.../...)

## JETTA (2005>2010) (.../...)

| | | | CC | | | AC | | | OE | Valeo | |
|---|---|---|---|---|---|---|---|---|---|---|---|
| 2.0 TDi,2.0 TDi 16V ▸ 1K-8-132 030 | 1K2/0/1/2 | D | 1968 | AZV,BKD,BMM/F | A | + | Right/Droite | 09/05 ▸ 01/08 | 1K0959455DH | | |
| 2.0 TDi,2.0 TDi 16V | 1K2/0/1/2 | D | 1968 | AZV,BKD,BMM/F | A | + | Left/gauche | 09/05 ▸ 06/08 | 1K0959455DL | | |

## LUPO

| | | | | | | | | | | | |
|---|---|---|---|---|---|---|---|---|---|---|---|
| 1.0 i | 6X10 | E | 999 | AHT | M | + | | 10/98 ▸ 05/00 | 6X0959455 | | |
| 1.0 i | 6X10 | E | 999 | AHT,ALD,ALL,ANV,AUC | M | + | | 10/98 ▸ | 6X0959455A | **696042** | |
| 1.0 i | 6X10 | E | 999 | AHT,ALD,ALL,ANV,AUC | M | + | | 10/98 ▸ 07/05 | 6X0959455F | **696042** | |
| 1.0 i | 6X10 | E | 999 | AHT,ALL | M | - | | 10/98 ▸ 05/00 | 6X0959455 | | |
| 1.0 i | 6X10 | E | 999 | AHT,ALL | M | - | | 10/98 ▸ 05/00 | 6X0959455C | **696078** | |
| 1.0 i | 6X10 | E | 999 | AER,AHT,ALD,ALL,ANV,AUC | M | - | | 10/98 ▸ 07/05 | 6N0959455D | **696041** | |
| 1.4 FSI 16V,1.4 i 1.4 i 16V | 6E10, 6X10 | E | 1390 | AFK,AHW,AKQ,APE,ARR,AUA,AUB AUD,BBY | M | + | | 10/98 ▸ | 6X0959455A | **696042** | |
| 1.4 FSI 16V,1.4 i 1.4 i 16V | 6E10, 6X10 | E | 1390 | AFK,AHW,AKQ,APE,ARR,AUA,AUB AUD,BBY | M | + | | 10/98 ▸ 07/05 | 6X0959455F | **696042** | |
| 1.4 i 16V | 6X10 | E | 1390 | AFK,AHW | M | + | | 01/99 ▸ 05/00 | 6X0959455 | | |
| 1.4 i 16V | 6X10 | E | 1390 | AFK,AHW,AKQ | M | - | | 10/98 ▸ 05/00 | 6X0959455 | | |
| 1.4 i 16V | 6X10 | E | 1390 | AFK,AHW,AKQ | M | - | | 10/98 ▸ 05/00 | 6X0959455C | **696078** | |
| 1.4 FSI 16V,1.4 i 1.4 i 16V | 6E10, 6X10 | E | 1390 | AFK,AHW,AKQ,APE,ARR,AUA,AUB AUD,BBY | M | - | | 10/98 ▸ 07/05 | 6N0959455D | **696041** | |
| 1.4 i 16V | 6X10 | E | 1390 | AHW,AKQ | A | + | | 10/98 ▸ 05/00 | 6X0959455 | | |
| 1.4 i 16V | 6X10 | E | 1390 | AHW,AKQ,APE,AUA,BBY | A | + | | 10/98 ▸ 07/05 | 6X0959455C | **696078** | |
| 1.4 i 16V | 6X10 | E | 1390 | AHW,AKQ,APE,AUA,BBY | A | - | | 10/98 ▸ 07/05 | 6N0959455D | **696041** | |
| 1.4 i 16V | 6X10 | E | 1390 | AHW,AKQ | A | - | | 10/98 ▸ 05/00 | 6X0959455 | | |
| 1.6 i 16V | 6E10 | E | 1598 | AVY | M | +/- | | 06/00 ▸ 07/05 | 6N0959453P | **696196** | |
| 1.2 TDi | 6E10 | D | 1191 | ANY,AYZ | M | + | | 05/99 ▸ 07/05 | 6X0959455C | **696078** | |
| 1.2 TDi | 6E10 | D | 1191 | ANY,AYZ | M | - | | 05/99 ▸ 07/05 | 6N0959455D | **696041** | |
| 1.2 TDi | 6E10 | D | 1191 | ANY,AYZ | M | - | | 05/99 ▸ 07/05 | 6E0959455A | | |
| 1.4 TDi | 6X10 | D | 1422 | AMF | M | +/- | | 05/99 ▸ 07/05 | 6N0959453P | **696196** | |
| 1.4 TDi | 6X10 | D | 1422 | AMF | M | + | | 05/99 ▸ 09/00 | 6X0959455F | **696042** | |
| 1.4 TDi | 6X10 | D | 1422 | AMF | M | + | | 05/99 ▸ | 6X0959455A | **696042** | |
| 1.4 TDi | 6X10 | D | 1422 | AMF | M | + | | 05/99 ▸ | 6X0959455 | | |
| 1.4 TDi | 6X10 | D | 1422 | AMF | M | - | | 05/99 ▸ | 6X0959455 | | |
| 1.4 TDi | 6X10 | D | 1422 | AMF | M | - | | 05/99 ▸ 07/05 | 6N0959455D | **696041** | |
| 1.4 TDi | 6X10 | D | 1422 | AMF | M | - | | 05/99 ▸ 09/00 | 6X0959455C | **696078** | |
| 1.7 SDi | 6X10 | D | 1716 | AKU | M | + | | 10/98 ▸ | 6X0959455A | **696042** | |
| 1.7 SDi | 6X10 | D | 1716 | AKU | M | + | | 10/98 ▸ 07/05 | 6X0959455F | **696042** | |
| 1.7 SDi | 6X10 | D | 1716 | AKU | M | - | | 10/98 ▸ 05/00 | 6X0959455 | | |
| 1.7 SDi | 6X10 | D | 1716 | AKU | M | - | | 10/98 ▸ 05/00 | 6X0959455C | **696078** | |
| 1.7 SDi | 6X10 | D | 1716 | AKU | M | - | | 10/98 ▸ 07/05 | 6N0959455D | **696041** | |

## NEW BEETLE (98>2001)

| | | | | | | | | | | | |
|---|---|---|---|---|---|---|---|---|---|---|---|
| 1.6 i | 9C13 | E | 1595 | AWH,AYD | M | +/- | | 11/99 ▸ 05/01 | 1C0959455 | | |
| 1.6 i | 9C13 | E | 1595 | AWH,AYD | M | +/- | | 11/99 ▸ 05/01 | 1J0959455M | **698373** | |
| 1.6 i | 9C13 | E | 1595 | AWH,AYD | M | +/- | | 11/99 ▸ 05/01 | 6X0959455C | **696078** | |
| 1.6 i | 9C13 | E | 1595 | AWH,AYD | M | +/- | | 11/99 ▸ | 6X0959455 | | |
| 1.6 i | 9C13 | E | 1595 | AYD | A | +/- | | 06/00 ▸ 05/01 | 1C0959455 | | |
| 1.6 i | 9C13 | E | 1595 | AYD | A | +/- | | 06/00 ▸ 05/01 | 1J0959455M | **698373** | |
| 1.6 i | 9C13 | E | 1595 | AYD | A | +/- | | 06/00 ▸ 05/01 | 6X0959455 | | |
| 1.6 i | 9C13 | E | 1595 | AYD | A | +/- | | 06/00 ▸ 05/01 | 6X0959455C | **696078** | |
| 1.8 i Turbo 20V | 1C15 | E | 1781 | APH | M | +/- | | 01/00 ▸ 06/00 | 6X0959455A | **696042** | |
| 1.8 i Turbo 20V | 1C15 | E | 1781 | APH | M | +/- | | 01/00 ▸ 06/00 | 6X0959455F | **696042** | |
| 1.8 i Turbo 20V | 1C15 | E | 1781 | APH | M | +/- | | 01/00 ▸ 06/00 | 1J0959455M | **698373** | |
| 1.8 i Turbo 20V | 9C13 | E | 1781 | AWU | M | +/- | | 10/00 ▸ 05/01 | 1C0959455 | | |
| 1.8 i Turbo 20V | 9C13 | E | 1781 | AWU | M | +/- | | 10/00 ▸ 05/01 | 6X0959455 | | |
| 1.8 i Turbo 20V | 9C13 | E | 1781 | AWU | M | +/- | | 10/00 ▸ 05/01 | 6X0959455C | **696078** | |
| 1.8 i Turbo 20V | 9C13, 1C1/5/7/8 | E | 1781 | APH,AVC,AWV | M | - | | 07/99 ▸ 05/01 | 6X0959455C | **696078** | |
| 1.8 i Turbo 20V | 9C13, 1C1/5/7/8 | E | 1781 | APH,AVC,AWU,AWV | M | - | | 07/99 ▸ | 6X0959455 | | |
| 1.8 i Turbo 20V | 9C13, 1C1/5/7/8 | E | 1781 | AVC,AWU,AWV | M | - | | 07/99 ▸ 05/01 | 1J0959455M | **698373** | |
| 1.8 i Turbo 20V | 1C1/5/7 | E | 1781 | APH | A | +/- | | 01/99 ▸ 06/00 | 6X0959455F | **696042** | |
| 1.8 i Turbo 20V | 1C1/5/7 | E | 1781 | APH | A | +/- | | 01/99 ▸ 06/00 | 1J0959455M | **698373** | |
| 1.8 i Turbo 20V | 1C1/5/7 | E | 1781 | APH | A | +/- | | 01/99 ▸ 05/01 | 6X0959455A | **696042** | |
| 1.8 i Turbo 20V | 1C1/5/7/8 | E | 1781 | APH,AWV | A | - | | 01/99 ▸ | 6X0959455 | | |
| 1.8 i Turbo 20V | 1C1/5/7/8 | E | 1781 | APH,AWV | A | - | | 01/99 ▸ 05/01 | 6X0959455C | **696078** | |
| 1.8 i Turbo 20V | 1C1/7/8 | E | 1781 | AWV | A | - | | 06/00 ▸ 05/01 | 1J0959455M | **698373** | |
| 2.0 i | 9C13, 1C1/3/8 | E | 1984 | AEG,AQY | M | +/- | | 01/98 ▸ | 6X0959455 | | |
| 2.0 i | 9C13, 1C1/3/8 | E | 1984 | AEG,AQY | M | +/- | | 01/98 ▸ 05/01 | 1C0959455 | | |
| 2.0 i | 9C13, 1C1/3/8 | E | 1984 | AEG,AQY | M | +/- | | 01/98 ▸ 05/01 | 6X0959455C | **696078** | |
| 2.0 i | 9C13, 1C1/3/8 | E | 1984 | AEG,AQY | M | + | | 01/98 ▸ 05/01 | 1J0959455M | **698373** | |
| 2.0 i | 9C13, 1C1/3/5/8 | E | 1984 | AEG,APK,AQY | A | +/- | | 01/98 ▸ | 6X0959455 | | |

Fan Motor + Blades Moteur + hélice Lüftermotor + Lüfterrad Motorino + Ventola Ventilatormotor Fan motoru + Kanatlar
Moto-ventilador + Aspas Мотор вентилятора + лопасти вентилятора Ventilátor motor és lapát Motor sahary + vrtule Ventilator motor + Lame Motér ανεμιστήρων + Πτερωτές



• **New** Nouveau **Nuevo** Novo **Nuovo** Nieuw **Neu** Nowość **Yeni** Новый Νέο **Novy**

# VOLKSWAGEN (.../...)

## NEW BEETLE (98>2001) (.../...)

| | | | CC | | | AC | | | OE | Valeo | |
|---|---|---|---|---|---|---|---|---|---|---|---|
| 2.0 i | 9C13, 1C1/3/5/8 | E | 1984 | AEG,APK,AQY | A | +/- | | 01/98 ▸ | 6X0959455C | 696078 | |
| 2.0 i | 9C13, 1C1/3/5/8 | E | 1984 | AEG,APK,AQY | A | +/- | | 01/98 ▸ 05/01 | 1C0959455 | | |
| 2.0 i | 9C13, 1C1/3/5/8 | E | 1984 | AEG,AQY | A | + | | 01/98 ▸ 05/01 | 1J0959455M | 698373 | |
| 2.0 i | 1C18 | E | 1984 | APK | A | - | | 03/00 ▸ 05/01 | 1J0959455F | | |
| 2.0 i | 1C18 | E | 1984 | APK | A | - | | 03/00 ▸ 05/01 | 6X0959455A | 696042 | |
| 2.0 i | 1C18 | E | 1984 | APK | A | - | | 03/00 ▸ 05/01 | 6X0959455F | 696042 | |
| 1.9 TDi | 9C13, 1C1/3/5/8 | D | 1896 | ALH,ATD | M | +/- | | 11/98 ▸ 05/01 | 1C0959455 | | |
| 1.9 TDi | 9C13, 1C1/3/5/8 | D | 1896 | ALH,ATD | M | +/- | | 11/98 ▸ 05/01 | 6X0959455C | 696078 | |
| 1.9 TDi | 9C13, 1C1/3/5/8 | D | 1896 | ALH,ATD | M | +/- | | 11/98 ▸ | 6X0959455 | | |
| 1.9 TDi | 9C13, 1C1/3/5/8 | D | 1896 | ALH,ATD | M | + | | 11/98 ▸ 05/01 | 1J0959455M | 698373 | |
| 1.9 TDi | 9C13, 1C1/3/5/8 | D | 1896 | ALH | M | - | | 11/98 ▸ 05/01 | 6X0959455F | 696042 | |
| 1.9 TDi | 9C13, 1C1/3/5/8 | D | 1896 | ALH | M | - | | 11/98 ▸ | 6X0959455A | 696042 | |
| 1.9 TDi | 9C13, 1C1/3/5/8 | D | 1896 | ALH | M | - | | 11/98 ▸ | 1J0959455F | | |
| 1.9 TDi | 9C13, 1C1/3/5/8 | D | 1896 | ALH | A | +/- | | 11/98 ▸ | 6X0959455 | | |
| 1.9 TDi | 9C13, 1C1/3/5/8 | D | 1896 | ALH | A | +/- | | 11/98 ▸ 05/01 | 6X0959455C | 696078 | |
| 1.9 TDi | 9C13, 1C1/3/5/8 | D | 1896 | ALH | A | +/- | | 11/98 ▸ 05/01 | 1C0959455 | | |
| 1.9 TDi | 9C13, 1C1/3/5/8 | D | 1896 | ALH | A | + | | 11/98 ▸ 05/01 | 1J0959455M | 698373 | |
| 1.9 TDi | 9C13, 1C1/3/5/8 | D | 1896 | ALH | A | - | | 11/98 ▸ | 6X0959455A | 696042 | |
| 1.9 TDi | 9C13, 1C1/3/5/8 | D | 1896 | ALH | A | - | | 11/98 ▸ | 1J0959455F | | |
| 1.9 TDi | 9C13, 1C1/3/5/8 | D | 1896 | ALH | A | - | | 11/98 ▸ 05/01 | 6X0959455F | 696042 | |

## NEW BEETLE (2001>2005)

| | | | | | | | | | | | |
|---|---|---|---|---|---|---|---|---|---|---|---|
| 1.4 i 16V | 1C13, 1Y73 | E | 1390 | BCA | M | +/- | | 08/01 ▸ 06/05 | 6X0959455C | 696078 | |
| 1.4 i 16V | 1C13, 1Y73 | E | 1390 | BCA | M | +/- | | 08/01 ▸ | 6X0959455 | | |
| 1.6 i | 1Y73, 9C13, 1C1/3 | E | 1595 | AYD,BFS | M | +/- | | 06/01 ▸ 06/05 | 6X0959455C | 696078 | |
| 1.6 i | 1Y73, 9C13, 1C1/3 | E | 1595 | AYD,BFS | M | +/- | | 06/01 ▸ | 6X0959455 | | |
| 1.6 i | 1Y73, 9C13, 1C1/3 | E | 1595 | AYD,BFS | M | + | | 06/01 ▸ 06/05 | 1J0959455M | 698373 | |
| 1.6 i | 1C13, 9C13 | E | 1595 | AYD,BFS | A | +/- | | 06/01 ▸ | 6X0959455 | | |
| 1.6 i | 1C13, 9C13 | E | 1595 | AYD,BFS | A | +/- | | 06/01 ▸ 06/05 | 6X0959455C | 696078 | |
| 1.6 i | 1C13, 9C13 | E | 1595 | AYD,BFS | A | + | | 06/01 ▸ 06/05 | 1J0959455M | 698373 | |
| 1.8 i Turbo 20V | 9C13, 1C1/3/8 | E | 1781 | AWU | M | +/- | | 06/01 ▸ | 6X0959455 | | |
| 1.8 i Turbo 20V | 1Y73, 9C13, 1C1/3/8 | E | 1781 | AWU | M | +/- | | 06/01 ▸ 06/05 | 6X0959455C | 696078 | |
| 1.8 i Turbo 20V | 9C13, 1C1/3/8 | E | 1781 | AWU | M | + | | 06/01 ▸ 06/05 | 1J0959455M | 698373 | |
| 1.8 i Turbo 20V | 1C17, 1Y73 | E | 1781 | AWP,AWU | M | | | 11/01 ▸ 06/05 | 1J0959455M | 698373 | |
| 1.8 i Turbo 20V | 9C13, 1C1/3/8 | E | 1781 | AWU | A | +/- | | 06/01 ▸ 06/05 | 6X0959455C | 696078 | |
| 1.8 i Turbo 20V | 9C13, 1C1/3/8 | E | 1781 | AWU | A | +/- | | 06/01 ▸ | 6X0959455 | | |
| 1.8 i Turbo 20V | 9C13, 1C1/3/8 | E | 1781 | AWU | A | + | | 06/01 ▸ 06/05 | 1J0959455M | 698373 | |
| 2.0 i | 1Y73, 9C13, 1C1/3/5/8 | E | 1984 | AEG,APK,AQY,AZJ,BEJ | M | +/- | | 06/01 ▸ | 6X0959455 | | |
| 2.0 i | 1Y73, 9C13, 1C1/3/5/8 | E | 1984 | AEG,APK,AQY,AZJ,BEJ | M | +/- | | 06/01 ▸ 06/05 | 6X0959455C | 696078 | |
| 2.0 i | 1Y73, 9C13, 1C1/3/5/8 | E | 1984 | AEG,APK,AQY,AZJ,BEJ | M | + | | 06/01 ▸ 06/05 | 1J0959455M | 698373 | |
| 2.0 i | 1Y73, 9C13, 1C1/3/5/8 | E | 1984 | AEG,APK,AQY,AZJ,BEJ | A | +/- | | 06/01 ▸ | 6X0959455 | | |
| 2.0 i | 1Y73, 9C13, 1C1/3/5/8 | E | 1984 | AEG,APK,AQY,AZJ,BEJ | A | +/- | | 06/01 ▸ 06/05 | 6X0959455C | 696078 | |
| 2.0 i | 1Y73, 9C13, 1C1/3/5/8 | E | 1984 | AEG,APK,AQY,AZJ,BEJ | A | + | | 06/01 ▸ 06/05 | 1J0959455M | 698373 | |
| 1.9 TDi | 1C13, 9C13 | D | 1896 | ALH,ATD | M | +/- | | 06/01 ▸ | 6X0959455 | | |
| 1.9 TDi | 1C13, 9C13 | D | 1896 | ALH,ATD | M | +/- | | 06/01 ▸ 06/05 | 6X0959455C | 696078 | |
| 1.9 TDi | 1C13, 9C13 | D | 1896 | ALH,ATD | M | + | | 06/01 ▸ 06/05 | 1J0959455M | 698373 | |
| 1.9 TDi | 1C13, 9C13 | D | 1896 | ALH | A | +/- | | 06/01 ▸ 06/04 | 6X0959455C | 696078 | |
| 1.9 TDi | 1C13, 9C13 | D | 1896 | ALH | A | +/- | | 06/01 ▸ | 6X0959455 | | |
| 1.9 TDi | 1C13, 9C13 | D | 1896 | ALH | A | + | | 06/01 ▸ 06/04 | 1J0959455M | 698373 | |

## NEW BEETLE (2005>)

| | | | | | | | | | | | |
|---|---|---|---|---|---|---|---|---|---|---|---|
| 1.4 i 16V | 1C13, 1Y73 | E | 1390 | BCA | M | +/- | | 07/05 ▸ 09/10 | 6X0959455C | 696078 | |
| 1.6 i | 1C13, 1Y73 | E | 1595 | BFS | M | +/- | | 07/05 ▸ | 6X0959455C | 696078 | |
| 1.6 i | 1C13 | E | 1595 | BFS | A | +/- | | 07/05 ▸ 12/10 | 6X0959455C | 696078 | |
| 1.8 i Turbo 20V | 1C13, 1Y73 | E | 1781 | AWU | M | +/- | | 07/05 ▸ 09/10 | 1J0959455M | 698373 | |
| 1.8 i Turbo 20V | 1C13 | E | 1781 | AWU | A | +/- | | 07/05 ▸ 12/07 | 1J0959455M | 698373 | |
| 2.0 i | 1Y73, 1C1/3/5 | E | 1984 | AZJ,BER,BHP | M | +/- | | 07/05 ▸ 09/10 | 6X0959455C | 696078 | |
| 2.0 i | 1Y73, 1C1/3/5 | E | 1984 | AZJ,BER,BHP | A | +/- | | 07/05 ▸ 09/10 | 6X0959455C | 696078 | |
| 1.9 TDi | 1Y73, 1C1/3/4/5 | D | 1896 | BSW | M | +/- | | 07/05 ▸ 09/10 | 6X0959455C | 696078 | |
| 1.9 TDi | 1C1/4/5 | D | 1896 | BEW | A | +/- | | 07/05 ▸ 12/06 | 6X0959455C | 696078 | |

## PASSAT (82>88)

| | | | | | | | | | | | |
|---|---|---|---|---|---|---|---|---|---|---|---|
| 1.3 | 321/5/6/7, 322/5/7, 323/5/6/7, 324/5/6/7 331/5/6/7, 332/5/6/7 | E | 1272 | FY,FZ | M | - | | 08/81 ▸ 07/83 | 165959455T | 698368 | |
| 1.3 | 321/5/6/7, 323/5/6/7, 331/5/6/7, 332/5/6/7 | E | 1272 | FZ | M | - | | 08/81 ▸ 07/83 | 165959455L | 696031 | |
| 1.3 | 321/0/1/5/6, 323/0/1/2/5/6/7/R/S, 327/R/S 331/0/1/6/R/S | E | 1297 | EP | M | - | | 08/83 ▸ 04/88 | 165959455T | 698368 | |
| 1.3 | 321/0/1/5/6, 323/0/1/2/5/6/7/R/S, 327/R/S 331/0/1/5/6/7/R/S | E | 1297 | EP,EU | M | - | | 08/83 ▸ 04/88 | 165959455L | 696031 | |
| 1.3,1.3 i | 323/6, 331/6/7 | E | 1297 | EU | A | - | | 08/83 ▸ 07/84 | 165959455L | 696031 | |

# VOLKSWAGEN (.../...)

## PASSAT (82>88) (.../...)

| Type Ctr. | | | CC | | | AC | | 2+3 | OE | Valeo | |
|---|---|---|---|---|---|---|---|---|---|---|---|
| 1.6 | 321/5/6/7/A/B/C, 322/5/6/7, 323/5/6/7/A/B/C 324/5/6/7/A/B/C, 331/5/6/7/A/B/C, 332/5/6/7 A/B/C | E | 1588 | WV,WY,YP | M | - | | 08/81 ▸ 04/88 | 165959455T | **698368** | |
| 1.6 | 321/5/6/7/A/B/C, 322/5/6/7, 323/5/6/7/A/B/C 324/5/6/7/A/B/C, 331/5/6/7/A/B/C, 332/5/6/7 A/B/C | E | 1588 | WV,WY,YP | M | - | | 08/81 ▸ 04/88 | 165959455L | **696031** | |
| 1.6 | 321/5/6/7, 322/5/6/7, 323/5/6/7, 324/5/6/7 331/5/6/7, 332/5/6/7 | E | 1588 | WV,WY,YP | A | - | | 08/81 ▸ 12/84 | 165959455T | **698368** | |
| 1.6 | 321/5/6/7, 322/5/6/7, 323/5/6/7, 324/5/6/7 331/5/6/7, 332/5/6/7 | E | 1588 | WV,WY,YP | A | - | | 08/81 ▸ 12/84 | 165959455L | **696031** | |
| 1.6 | 321/0/1/2, 323/0/1/2/D/R/S/T, 324/0/R, 328R 327/R/S/T, 331/0/1/6/7/C/D/T, 332/0/5 | E | 1595 | DT,DTA | M | + | | 08/83 ▸ 04/88 | 327959455A | **696038** | |
| 1.6 | 321/0/1/2, 323/0/1/2/D/J/K/L/R/S/T, 324/0/R 328R, 327/R/S/T, 331/0/1/6/7/C/D/K/L/R/S/T 332/0/5 | E | 1595 | DT,DTA,JU,PP | M | - | | 08/83 ▸ 04/88 | 165959455T | **698368** | |
| 1.6 | 321/0/1/2, 323/0/1/2/D/J/K/L/R/S/T, 324/0/R 328R, 327/R/S/T, 331/0/1/6/7/C/D/K/L/R/S/T 332/0/5 | E | 1595 | DT,DTA,JU,PP | M | - | | 08/83 ▸ 04/88 | 165959455L | **696031** | |
| 1.6 | 321/0/1/2, 323/0/1/2/D/R/S/T, 327/R/S/T, 331 0/1/D/R/S/T | E | 1595 | DT | A | + | | 08/84 ▸ 04/88 | 327959455A | **696038** | |
| 1.6 | 321/0/1/2, 323/0/1/2/D/R/S/T, 327/R/S/T, 331 0/1/D/R/S/T | E | 1595 | DT | A | - | | 08/84 ▸ 04/88 | 165959455T | **698368** | |
| 1.6 | 321/0/1/2, 323/0/1/2/D/R/S/T, 327/R/S/T, 331 0/1/D/R/S/T | E | 1595 | DT | A | - | | 08/84 ▸ 04/88 | 165959455L | **696031** | |
| 1.8 | 321/0/1/2/6, 323/0/1/2/D/R/S/T, 324/D/S, 327 7/R/S/T, 328/S/T, 331/0/1/D/R/S/T/U, 332/1/S | E | 1781 | DS,JV,RM | M | - | | 08/83 ▸ 07/88 | 165959455L | **696031** | |
| 1.8 | 321/0/1/2/6, 323/0/1/2/D/R/S/T, 324/D/S, 327 7/R/S/T, 328/S/T, 331/0/1/D/R/S/T/U, 332/1/S | E | 1781 | DS,JV,RM | M | - | | 08/83 ▸ 07/88 | 165959455T | **698368** | |
| 1.8 | 321/0/1/2, 324S, 323/0/1/2/D/R/S/T, 327/7/R S/T, 328/S/T, 331/0/1/D/R/S/T, 332/1/S | E | 1781 | DS,JV,RM | A | - | | 08/83 ▸ 04/88 | 165959455T | **698368** | |
| 1.8 | 321/0/1/2, 324S, 323/0/1/2/D/R/S/T, 327/7/R S/T, 328/S/T, 331/0/1/D/R/S/T, 332/1/S | E | 1781 | DS,JV,RM | A | - | | 08/83 ▸ 04/88 | 165959455L | **696031** | |
| 1.9 | 321/5/6/7, 323/5/6/7, 324/5/6/7, 331/5/6/7 332/5/6/7 | E | 1921 | WN | M | - | | 08/81 ▸ 07/83 | 165959455T | **698368** | |
| 1.9 | 321/5/6/7, 323/5/6/7, 324/5/6/7, 331/5/6/7 332/5/6/7 | E | 1921 | WN | A | - | | 08/81 ▸ 07/84 | 165959455T | **698368** | |
| 2.0 i | 323/1/2/6/7/A/D/R/T, 324/1/2/A/D/R/T, 327/C R/T, 328/C/R/T, 331/1/6/7/8/D/P/R/T/V/W, 332 A/D/R/T | E | 1994 | HP,JS | M | - | | 08/83 ▸ 07/88 | 165959455T | **698368** | |
| 2.0 i | 323/1/2/6/7/A/D/R/T, 324/1/2/A/D/R/T, 327/C R/T, 328/C/R/T, 331/1/6/7/A/D/R/T, 332/A/D/R T | E | 1994 | HP,JS | A | - | | 08/83 ▸ 04/88 | 165959455T | **698368** | |
| 2.3 i | 324K, 323/E/J/K, 328K, 327/F/J/K, 332K, 331 E/J/K | E | 2226 | KX | M | - | | 08/85 ▸ 04/88 | 165959455T | **698368** | |
| 2.3 i | 324K, 323/E/J/K, 328K, 327/F/J/K, 332K, 331 E/J/K | E | 2226 | KX | A | - | | 08/85 ▸ 04/88 | 165959455T | **698368** | |
| 1.6 D | 321/0/1/2/5/6/7, 322/5/6/7, 323/0/1/2/5/6/7 R/S/T, 324/0/1/2/5/6/7/R/S/T, 327/R/S/T, 328 R/S/T, 331/0/1/5/6/7/R/S/T, 332/0/1/5/6/7/R S | D | 1588 | CR,JK | M | - | | 08/81 ▸ 04/88 | 165959455T | **698368** | |
| 1.6 D | 321/5/6/7, 322/5/6/7, 323/5/6/7, 324/5/6/7 331/5/6/7, 332/5/6/7 | D | 1588 | CR | A | - | | 08/81 ▸ 04/88 | 165959455T | **698368** | |

## PASSAT (88>93)

| | | | | | | | | | | | |
|---|---|---|---|---|---|---|---|---|---|---|---|
| 1.6,1.6 i | 312/1/2/3, 315/1/2/3 | E | 1595 | 1F,ABN,EZ,RF | M | + | | 04/88 ▸ 07/92 | 327959455A | **696038** | |
| 1.6,1.6 i | 312/1/2/3, 315/1/2/3 | E | 1595 | 1F,EZ,RF | M | - | | 04/88 ▸ 05/91 | 165959455T | **698368** | |
| 1.6 31-M-340001 ▸ | 312/2/3, 315/2/3 | E | 1595 | ABN,EZ | M | - | | 05/91 ▸ 07/92 | 165959455L | **696031** | |
| 1.6 31-M-340001 ▸ | 312/2/3, 315/2/3 | E | 1595 | EZ | M | - | | 05/91 ▸ 09/91 | 1H0959455D | **698367** | |
| 1.6 | 3123 | E | 1595 | EZ | A | + | | 08/88 ▸ 07/89 | 165959455T | **698368** | |
| 1.6,1.6 i | 312/2/3, 315/2/3 | E | 1595 | 1F,EZ,RF | A | + | | 08/88 ▸ 07/90 | 327959455A | **696038** | |
| 1.6,1.6 i | 312/2/3, 315/2/3 | E | 1595 | 1F,EZ,RF | A | - | | 08/88 ▸ 07/90 | 165959455T | **698368** | |
| 1.8 i,1.8 i 16V | 312/1/2/3/5 | E | 1781 | AAM,KR,RP | M | +/- | | 08/90 ▸ 10/93 | 327959455A | **696038** | |
| 1.8,1.8 i,1.8 i 16V | 312/1/2/3/5, 315/1/2 3/5 | E | 1781 | AAM,ABS,KR,PB,PF,RP | M | + | | 04/88 ▸ 10/93 | 327959455A | **696038** | |
| 1.8,1.8 i | 312/1/2/3, 315/1/2/3 5 | E | 1781 | ABS,PB,PF | M | + | | 04/88 ▸ 10/93 | 1H0959455D | **698367** | |
| 1.8 i 16V | 312/3/5, 315/3/5 | E | 1781 | KR | M | - | | 04/88 ▸ 07/92 | 1H0959455 | **698370** | |

Fan Motor + Blades Moteur + hélice Lüftermotor + Lüfterrad Motorino + Ventola Ventilatormotor Fan motoru + Kanatlar
Moto-ventilador + Aspas Мотор вентилятора + лопасти вентилятора Ventilátor motor és lapát Motor sahary + vrtule Ventilator motor + Lame Μοτέρ ανεμιστήρων + Πτερωτές



• **New** Nouveau **Nuevo** Novo **Nuovo** Nieuw **Neu** Nowość **Yeni** Новый Νέο **Novy**

## PASSAT (88>93) (.../...)

| | Type Ctr. | CC | | | AC | | | OE | Valeo |
|---|---|---|---|---|---|---|---|---|---|
| 1.8,1.8 i | 312/1/2/3/5, 315/1/2 3/5 | E | 1781 | ABS,PB,PF,RP | M | - | | 04/88 ▸ 10/93 | 165959455T | 698368 |
| 1.8,1.8 i,1.8 i 16V | 312/1/2/3/5, 315/1/2 3/5 | E | 1781 | AAM,ABS,KR,PB,PF,RP | M | - | | 04/88 ▸ 10/93 | 1H0959455D | 698367 |
| 1.8 i | 312/1/2/3/5, 315/1/2/3 | E | 1781 | AAM,RP | M | - | | 05/91 ▸ 10/93 | 165959455L | 696031 |
| 1.8,1.8 i | 312/1/2/3/5, 315/1/2 3/5 | E | 1781 | ABS,PB,PF,RP | A | + | | 08/88 ▸ 10/93 | 1H0959455D | 698367 |
| 1.8,1.8 i,1.8 i 16V | 312/1/2/3/5, 315/1/2 3/5 | E | 1781 | ABS,KR,PB,PF | A | + | | 08/88 ▸ 10/93 | 327959455A | 696038 |
| 1.8 i 16V | 312/3/5, 315/3/5 | E | 1781 | KR | A | - | | 08/88 ▸ 07/89 | 1H0959455 | 698370 |
| 1.8,1.8 i<br>31-M-340001 ▸ | 312/1/2/3/5, 315/1/2 3/5 | E | 1781 | ABS,PB,PF,RP | A | - | | 08/88 ▸ 10/93 | 1H0959455D | 698367 |
| 1.8 i | 312/1/2/3/5 | E | 1781 | ABS | A | - | | 08/90 ▸ 10/93 | 165959455T | 698368 |
| 2.0,2.0 i 16V | 312/1/2/3/5/8 | E | 1984 | 2E,9A | M | +/- | | 08/90 ▸ 10/93 | 327959455A | 696038 |
| 2.0 i 16V | 312/2/3/5/8, 315/2/3 5/8 | E | 1984 | 9A | M | + | | 04/88 ▸ 10/93 | 1H0959455D | 698367 |
| 2.0,2.0 i,2.0 i 16V | 312/1/2/3/5/8, 315/1 2/3/5/8 | E | 1984 | 2E,9A,ACX | M | + | | 08/90 ▸ 10/93 | 357959455F | 696039 |
| 2.0,2.0 i,2.0 i 16V | 312/3, 315/1/2/3/5/8 | E | 1984 | 2E,9A,ACX | M | + | | 08/90 ▸ 10/93 | 327959455A | 696038 |
| 2.0,2.0 i,2.0 i 16V | 312/2/3/5/8, 315/2/3 5/8 | E | 1984 | 2E,9A | M | - | | 04/88 ▸ 10/93 | 327959455A | 696038 |
| 2.0,2.0 i,2.0 i 16V | 312/1/2/3/5/8, 315/1 2/3/5/8 | E | 1984 | 2E,9A,ACX | M | - | | 04/88 ▸ 10/93 | 1H0959455 | 698370 |
| 2.0,2.0 i,2.0 i 16V | 312/1/2/3/5, 315/1/2 3/5/8 | E | 1984 | 2E,9A | M | - | | 08/90 ▸ 10/93 | 1H0959455D | 698367 |
| 2.0 | 3122 | E | 1984 | 2E | M | | | 03/90 ▸ 07/90 | 327959455A | 696038 |
| 2.0 | 3122 | E | 1984 | 2E | A | +/- | | 08/90 ▸ 08/91 | 1H0959455 | 698370 |
| 2.0,2.0 i 16V | 312/1/2/3/5/8 | E | 1984 | 2E,9A | A | +/- | | 05/91 ▸ 10/93 | 327959455A | 696038 |
| 2.0,2.0 i,2.0 i 16V | 312/1/2/3/5/8, 315/1 2/3/5/8 | E | 1984 | 2E,9A | A | + | | 03/90 ▸ 10/93 | 357959455F | 696039 |
| 2.0 i,2.0 i 16V<br>31-M-340001, 31-M-033272 ▸ | 312/3, 315/1/2/3/5/8 | E | 1984 | 2E,9A | A | + | | 08/90 ▸ 10/93 | 327959455A | 696038 |
| 2.0 i 16V<br>31-M-340001 ▸ | 315/3/5/8 | E | 1984 | 9A | A | + | | 05/91 ▸ 10/93 | 1H0959455D | 698367 |
| 2.0,2.0 i,2.0 i 16V | 312/1/2/3/5/8, 315/1 2/3/5/8 | E | 1984 | 2E,9A | A | - | | 03/90 ▸ 10/93 | 1H0959455 | 698370 |
| 2.0,2.0 i,2.0 i 16V | 312/1/2/3/5, 315/1/2 3/5/8 | E | 1984 | 2E,9A | A | - | | 05/91 ▸ 10/93 | 1H0959455D | 698367 |
| 2.8 i,2.8 i V6 | 312/3/5/8, 315/3/5/8 | E | 2792 | AAA | M | - | | 06/91 ▸ 10/93 | 357959455F | 696039 |
| 2.8 i VR6 | 3128 | E | 2792 | AAA | A | - | | 06/91 ▸ 10/93 | 357959455F | 696039 |
| 1.6 TD | 312/1/3/5, 315/1/2/3 5 | D | 1588 | SB | M | + | | 08/90 ▸ 10/93 | 357959455F | 696039 |
| 1.6 TD | 312/1/2/3/5, 315/1/2 3/5 | D | 1588 | RA,SB | M | - | | 06/88 ▸ 07/91 | 1H0959455D | 698367 |
| 1.6 TD | 312/1/2/3/5, 315/1/2 3/5 | D | 1588 | SB | M | - | | 08/90 ▸ 10/93 | 357959455F | 696039 |
| 1.6 TD | 312/1/2/3/5, 315/1/2 3/5 | D | 1588 | SB | M | - | | 08/90 ▸ 10/93 | 327959455A | 696038 |
| 1.6 TD | 312/2/3/5, 315/2/3/5 | D | 1588 | RA | A | - | | 08/88 ▸ 07/90 | 1H0959455D | 698367 |
| 1.9 D | 312/1/2/3, 315/1/2/3 | D | 1896 | 1Y | M | - | | 08/88 ▸ 07/90 | 327959455A | 696038 |
| 1.9 D,1.9 TD | 312/1/2/3/8, 315/1/2 3 | D | 1896 | 1Y,AAZ | M | - | | 08/90 ▸ 10/93 | 357959455F | 696039 |
| 1.9 TD | 3151 | D | 1896 | AAZ | A | + | | 08/92 ▸ 10/93 | 357959455F | 696039 |
| 1.9 D | 312/2/3, 315/2/3 | D | 1896 | 1Y | A | - | | 08/88 ▸ 07/90 | 327959455A | 696038 |
| 1.9 TD | 315/2/3 | D | 1896 | AAZ | A | - | | 03/91 ▸ 10/93 | 357959455F | 696039 |

## PASSAT (93>97)

| | | | | | | | | | |
|---|---|---|---|---|---|---|---|---|---|
| 1.8 i | 3A2/2/3/5, 3A5/2/3/5 | E | 1781 | ABS | M | + | | 10/93 ▸ 09/94 | 3A0959455B | 696056 |
| 1.8 i | 3A2/2/3/5, 3A5/2/3/5 | E | 1781 | ABS | M | - | | 10/93 ▸ 09/94 | 1H0959455 | 698370 |
| 1.8 i | 3A2/2/3/5, 3A5/2/3/5 | E | 1781 | ABS | M | - | | 10/93 ▸ 09/94 | 1H0959455D | 698367 |
| 1.8 i | 3A2/2/3/5, 3A5/2/3/5 | E | 1781 | ABS | A | + | | 10/93 ▸ 09/94 | 3A0959455B | 696056 |
| 1.8 i | 3A2/2/3/5, 3A5/2/3/5 | E | 1781 | ABS | A | - | | 10/93 ▸ 09/94 | 1H0959455 | 698370 |
| 2.0 i,2.0 i 16V | 3A2/2/3/5, 3A5/2/3/5 | E | 1984 | 2E,ABF,ADY,AGG | M | + | | 10/93 ▸ 05/97 | 3A0959455B | 696056 |
| 2.0 i,2.0 i 16V | 3A2/2/3/5, 3A5/2/3/5 | E | 1984 | 2E,ABF,ADY,AGG | M | - | | 10/93 ▸ 05/97 | 1H0959455D | 698367 |
| 2.0 i,2.0 i 16V | 3A2/2/3/5, 3A5/2/3/5 | E | 1984 | 2E,ABF,ADY,AGG | M | - | | 10/93 ▸ 05/97 | 1H0959455 | 698370 |
| 2.0 i | 3A2/2/3/5, 3A5/2/3/5 | E | 1984 | 2E,ADY,AGG | A | + | | 10/93 ▸ 12/96 | 3A0959455B | 696056 |
| 2.0 i | 3A2/2/3/5, 3A5/2/3/5 | E | 1984 | 2E,ADY,AGG | A | - | | 10/93 ▸ 12/96 | 1H0959455D | 698367 |
| 2.0 i | 3A2/2/3/5, 3A5/2/3/5 | E | 1984 | 2E,ADY,AGG | A | - | | 10/93 ▸ 12/96 | 1H0959455 | 698370 |
| 2.9 i VR6 | 3A56 | E | 2861 | ABV | M | - | | 01/94 ▸ 05/97 | 3A0959455B | 696056 |

# VOLKSWAGEN (.../...)

## PASSAT (93>97) (.../...)

| Type Ctr. | | CC | | AC | | | | OE | Valeo |
|---|---|---|---|---|---|---|---|---|---|
| 1.9 TDi | 3A2/2/3/5/A, 3A5/2/3 5 | D | 1896 | 1Z | M | + | | 10/93 ▸ 12/96 | 3A0959455B | **696056** |
| 1.9 TDi | 3A2/2/3/5/A, 3A5/2/3 5 | D | 1896 | 1Z | M | - | | 10/93 ▸ 12/96 | 1H0959455 | **698370** |
| 1.9 TDi | 3A2/2/3/5/A, 3A5/2/3 5 | D | 1896 | 1Z | M | - | | 10/93 ▸ 12/96 | 1H0959455D | **698367** |
| 1.9 TD | 3A2/2/3, 3A5/2/3 | D | 1896 | AAZ | M | - | | 10/93 ▸ 12/96 | 3A0959455B | **696056** |
| 1.9 TDi | 3A2/2/3/5/A, 3A5/2/3 5/A | D | 1896 | 1Z | A | + | | 10/93 ▸ 12/96 | 3A0959455B | **696056** |
| 1.9 TDi | 3A2/2/3/5/A, 3A5/2/3 5/A | D | 1896 | 1Z | A | - | | 10/93 ▸ 12/96 | 1H0959455 | **698370** |

## PASSAT (96>2000)

| Type Ctr. | | CC | | AC | | | | OE | Valeo |
|---|---|---|---|---|---|---|---|---|---|
| 1.6 i | 3B2/3/A, 3B5/3/A | E | 1595 | ADP,AHL,ANA,ARM | M | +/- | | 10/96 ▸ 08/00 | 8D0959455C | **698155** |
| 1.6 i | 3B5/3/A | E | 1595 | AHL | M | + | C | 05/97 ▸ 07/99 | 8D0959455C | **698155** |
| 1.6 i | 3B23, 3B53 | E | 1595 | ANA,ARM | M | - | | 01/99 ▸ 08/00 | 8D0959455C | **698155** |
| 1.6 i | 3B53, 3B2/3/A | E | 1595 | ADP,AHL,ANA,ARM | A | +/- | C | 10/96 ▸ 08/00 | 8D0959455C | **698155** |
| 1.6 i | 3B23, 3B53 | E | 1595 | ADP,AHL | A | + | | 01/97 ▸ 08/00 | 8D0959455C | **698155** |
| 1.6 i | 3B23, 3B53 | E | 1595 | ARM | A | - | | 05/99 ▸ 08/00 | 8D0959455C | **698155** |
| 1.8 i,1.8 i 20V 1.8 i Turbo 20V | 3B2/3/A, 3B5/3/A | E | 1781 | ADR,AEB,AFY,ANB,APT,APU,ARG | M | +/- | | 10/96 ▸ 08/00 | 8D0959455C | **698155** |
| 1.8 i | 3B53 | E | 1781 | AFY | M | + | C | 05/97 ▸ 04/00 | 8D0959455C | **698155** |
| 1.8 i,1.8 i 20V 1.8 i Turbo 20V | 3B53, 3B2/3/A | E | 1781 | ADR,AEB,AFY,ANB,APT,APU,ARG | A | +/- | C | 10/96 ▸ 08/00 | 8D0959455C | **698155** |
| 1.8 i | 3B53 | E | 1781 | AFY | A | + | C | 05/97 ▸ 04/00 | 8D0959455C | **698155** |
| 2.3 i VR5 20V | 3B23 | E | 2324 | AGZ | M | +/- | | 09/97 ▸ 08/98 | 8D0959455C | **698155** |
| 2.3 i VR5 20V | 3B23, 3B53 | E | 2324 | AGZ | M | + | | 09/97 ▸ 08/00 | 3B0959455C | |
| 2.3 i VR5 20V | 3B23, 3B53 | E | 2324 | AGZ | M | - | | 09/97 ▸ 08/00 | 8D0959455C | **698155** |
| 2.3 i VR5 20V | 3B23, 3B53 | E | 2324 | AGZ | A | + | | 09/97 ▸ 08/00 | 3B0959455C | |
| 2.3 i VR5 20V | 3B23, 3B53 | E | 2324 | AGZ | A | - | | 09/97 ▸ 08/00 | 8D0959455C | **698155** |
| 2.8 i V6 30V | 3B2/6/B, 3B5/6/B | E | 2771 | ACK,AGE,ALG,APR,AQD,ATX | M | +/- | | 05/97 ▸ 08/00 | 8D0959455C | **698155** |
| 2.8 i V6 30V | 3B26, 3B56 | E | 2771 | ACK | M | + | | 06/97 ▸ 12/98 | 8D0959455C | **698155** |
| 2.8 i V6 30V | 3B26, 3B56 | E | 2771 | APR,ATX | M | + | | 01/99 ▸ 08/00 | 8D0959455J | |
| 2.8 i V6 30V | 3B2/6/B, 3B5/6/B | E | 2771 | ACK | M | - | Right/Droite | 05/97 ▸ 12/98 | 8D0959455J | |
| 2.8 i V6 30V | 3B26, 3B56 | E | 2771 | AQD,ATX | M | - | | 05/99 ▸ 08/00 | 8D0959455C | **698155** |
| 2.8 i V6 30V | 3B56, 3B2/6/B | E | 2771 | ACK,AGE,ALG,APR,AQD,ATX | A | +/- | | 05/97 ▸ 08/00 | 8D0959455C | **698155** |
| 2.8 i V6 30V | 3B2/6, 3B5/6/B | E | 2771 | ACK | A | + | | 06/97 ▸ 12/98 | 8D0959455C | **698155** |
| 2.8 i V6 30V | 3B26, 3B56 | E | 2771 | APR,ATX | A | + | | 01/99 ▸ 08/00 | 8D0959455J | |
| 2.8 i V6 30V | 3B2/6/B, 3B5/6/B | E | 2771 | ACK | A | - | Right/Droite | 05/97 ▸ 12/98 | 8D0959455J | |
| 2.8 i V6 30V | 3B26, 3B56 | E | 2771 | ATX | A | - | | 09/99 ▸ 08/00 | 8D0959455C | **698155** |
| 1.9 TDi | 3B53, 3B2/3/A | D | 1896 | AFN,AHH,AHU,AJM,AVG | M | +/- | | 10/96 ▸ 08/00 | 8D0959455C | **698155** |
| 1.9 TDi | 3B2/3, 3B5/3/A | D | 1896 | AFN,AHU | M | + | C | 05/97 ▸ 08/00 | 8D0959455C | **698155** |
| 1.9 TDi | 3B23, 3B53 | D | 1896 | AFN,AHH,AHU,AJM,AVG | A | +/- | | 10/96 ▸ 08/00 | 8D0959455C | **698155** |
| 1.9 TDi | 3B53 | D | 1896 | AFN,AHU | A | + | C | 05/97 ▸ 08/00 | 8D0959455C | **698155** |
| 1.9 TDi | 3B23 | D | 1896 | AJM | A | - | | 03/99 ▸ 12/99 | 8D0959455C | **698155** |
| 2.5 TDi V6 | 3B26, 3B56 | D | 2496 | AFB,AKN | M | +/- | | 09/99 ▸ 08/00 | 8D0959455C | **698155** |
| 2.5 TDi V6 | 3B26, 3B56 | D | 2496 | AFB,AKN | A | +/- | Right/Droite | 08/98 ▸ 08/00 | 8D0959455C | **698155** |

## PASSAT (2000>2005)

| Type Ctr. | | CC | | AC | | | | OE | Valeo |
|---|---|---|---|---|---|---|---|---|---|
| 1.6 i | 3B3/0/1/2, 3B6/0/1/2 | E | 1595 | ALZ | M | +/- | | 10/00 ▸ 05/05 | 8D0959455P | |
| 1.8 i Turbo 20V | 3B3/0/1/2/3/4, 3B6/0 1/2/3/4 | E | 1781 | AWT | M | +/- | | 10/00 ▸ 05/05 | 8D0959455P | |
| 1.8 i Turbo 20V | 3B3/0/1/2/3/4/6, 3B6 0/1/2/3/4/6 | E | 1781 | AWM,AWT | A | +/- | | 10/00 ▸ 05/05 | 8D0959455P | |
| 2.0 i | 3B3/0/1/2/3, 3B6/0/1/2/3 | E | 1984 | AZM | M | +/- | | 10/00 ▸ 05/05 | 8D0959455P | |
| 2.0 i | 3B3/0/1/2/3, 3B6/0/1/2/3 | E | 1984 | AZM | A | +/- | | 10/00 ▸ 05/05 | 8D0959455P | |
| 2.3 i V5 | 3B3/1/2/3, 3B6/1/2/3 | E | 2324 | AZX | M | - | | 01/01 ▸ 05/05 | 8D0959455P | |
| 2.3 i V5 | 3B3/1/2/3, 3B6/1/2/3 | E | 2324 | AZX | M | - | | 01/01 ▸ 05/05 | 8D0959455N | |
| 2.3 i V5 | 3B3/1/2/3, 3B6/1/2/3 | E | 2324 | AZX | A | - | | 01/01 ▸ 05/05 | 8D0959455N | |
| 2.3 i V5 | 3B3/1/2/3, 3B6/1/2/3 | E | 2324 | AZX | A | - | | 01/01 ▸ 05/05 | 8D0959455P | |
| 2.3 i V5 ▸ 3b-1-200 000 | 3B3/1/2/3, 3B6/1/2/3 | E | 2324 | AZX | M | + | | 01/01 ▸ 02/01 | 3B0959455C | |
| 2.3 i V5 ▸ 3b-1-200 000 | 3B3/1/2/3, 3B6/1/2/3 | E | 2324 | AZX | A | + | | 01/01 ▸ 02/01 | 3B0959455C | |
| 2.8 i V6 | 3B3/1/2/3, 3B6/0/1/2 3 | E | 2771 | AMX,ATQ,BBG | M | +/- | | 10/00 ▸ 05/05 | 8D0959455P | |
| 2.8 i V6 | 3B3/1/2/3/4/5, 3B6/1 2/3/4/5 | E | 2771 | AMX,ATQ,BBG | A | +/- | | 10/00 ▸ 05/05 | 8D0959455P | |

## PASSAT (2005>2010)

| Type Ctr. | | CC | | AC | | | | OE | Valeo |
|---|---|---|---|---|---|---|---|---|---|
| 1.6 i | 3C2/0/1/2 | E | 1595 | BSE | M | +/- | | 03/05 ▸ | 1K0959455R | |

Fan Motor + Blades Moteur + hélice Lüftermotor + Lüfterrad Motorino + Ventola Ventilatormotor Fan motoru + Kanatlar
Moto-ventilador + Aspas Мотор вентилятора + лопасти вентилятора Ventilátor motor és lapát Motor sahary + vrtule Ventilator motor + Lame Μοτέρ ανεμιστήρων + Πτερωτές



• **New** Nouveau **Nuevo** Novo **Nuovo** Nieuw **Neu** Nowość **Yeni** Новый Νέο **Novy**

## PASSAT (2005>2010) (.../...)

| Type Ctr. | | CC | | | AC | | | OE | Valeo |
|---|---|---|---|---|---|---|---|---|---|
| 1.6 i | 3C2/0/1/2, 3C5/0/1/2 | E | 1595 | BSE,BSF | M | +/- | Left/gauche | 05/05 ▸ 11/10 | 1K0959455EA |
| 1.6 i | 3C2/0/1/2, 3C5/0/1/2 | E | 1595 | BSE,BSF | M | +/- | Left/gauche | 05/05 ▸ | 1K0959455P |
| 1.6 i | 3C2/0/1/2, 3C5/0/1/2 | E | 1595 | BSE,BSF | M | +/- | | 05/05 ▸ 11/10 | 1K0959455DG |
| 1.6 FSi 16V | 3C2/0/1/2/3, 3C5/0/1 2/3 | E | 1598 | BLF | M | +/- | Left/gauche | 03/05 ▸ 06/08 | 1K0959455EA |
| 1.6 FSi 16V | 3C2/0/1/2/3, 3C5/0/1 2/3 | E | 1598 | BLF | M | +/- | Right/Droite | 03/05 ▸ 06/08 | 1K0959455DG |
| 1.6 FSi 16V | 3C2/0/1/3 | E | 1598 | BLF | M | +/- | | 03/05 ▸ | 1K0959455R |
| 1.6 FSi 16V | 3C2/0/1/2/3, 3C5/0/1 2/3 | E | 1598 | BLF | M | +/- | Left/gauche | 03/05 ▸ | 1K0959455P |
| 1.6 FSi 16V | 3C2/0/1/2/3 | E | 1598 | BLF | A | +/- | | 03/05 ▸ | 1K0959455R |
| 1.6 FSi 16V | 3C2/0/1/2/3, 3C5/0/1 2/3 | E | 1598 | BLF | A | +/- | Left/gauche | 03/05 ▸ | 1K0959455P |
| 1.6 FSi 16V | 3C2/0/1/2/3, 3C5/0/1 2/3 | E | 1598 | BLF | A | +/- | Right/Droite | 03/05 ▸ 06/08 | 1K0959455DG |
| 1.6 FSi 16V | 3C2/0/1/2/3, 3C5/0/1 2/3 | E | 1598 | BLF | A | +/- | Left/gauche | 03/05 ▸ 06/08 | 1K0959455EA |
| 2.0 FSi 16V,2.0 TFSi 16V | 3C2/0/1/2/3, 3C5/0/1 2/3 | E | 1984 | AXX,BLR,BLX,BLY,BVX,BVY,BVZ BWA | M | +/- | | 03/05 ▸ 11/10 | 1K0959455DL |
| 2.0 FSi 16V | 3C2/0/1/2/3, 3C5/0/1 2/3 | E | 1984 | BLR,BLX,BLY,BVX,BVY,BVZ | M | +/- | Left/gauche | 03/05 ▸ | 1K0959455P |
| 2.0 FSi 16V,2.0 TFSi 16V | 3C2/0/1/2/3, 3C5/0/1 2/3 | E | 1984 | AXX,BLR,BLX,BLY,BVX,BVY,BVZ BWA | M | +/- | Left/gauche | 03/05 ▸ | 1K0959455N |
| 2.0 FSi 16V | 3C2/0/1/2/3, 3C5/0/1 2/3 | E | 1984 | BLR,BLX,BLY,BVX,BVY,BVZ | M | +/- | Right/Droite | 03/05 ▸ 11/10 | 1K0959455DG |
| 2.0 FSi 16V | 3C2/0/1/2/3, 3C5/0/1 2/3 | E | 1984 | BLR,BLX,BLY,BVX,BVY,BVZ | M | +/- | Left/gauche | 03/05 ▸ 11/10 | 1K0959455EA |
| 2.0 FSi 16V,2.0 TFSi 16V | 3C2/0/1/2/3, 3C5/0/1 2/3 | E | 1984 | AXX,BLR,BLX,BLY,BVX,BVY,BVZ BWA | M | +/- | | 03/05 ▸ | 1K0959455Q |
| 2.0 FSi 16V,2.0 TFSi 16V | 3C2/0/1/2/3, 3C5/0/1 2/3 | E | 1984 | AXX,BLR,BLX,BLY,BVX,BVY,BVZ BWA | M | +/- | Right/Droite | 03/05 ▸ 11/10 | 1K0959455DH |
| 2.0 FSi 16V | 3C2/0/1/2/3, 3C5/0/1 2/3 | E | 1984 | BLR,BLY,BVY,BVZ | A | +/- | Left/gauche | 03/05 ▸ | 1K0959455P |
| 2.0 FSi 16V | 3C2/0/1/2/3, 3C5/0/1 2/3 | E | 1984 | BLR,BLY,BVY,BVZ | A | +/- | Left/gauche | 03/05 ▸ 11/10 | 1K0959455EA |
| 2.0 FSi 16V | 3C2/0/1/2/3, 3C5/0/1 2/3 | E | 1984 | BLR,BLY,BVY,BVZ | A | +/- | Right/Droite | 03/05 ▸ 11/10 | 1K0959455DG |
| 2.0 FSi 16V,2.0 TFSi 16V | 3C2/0/1/2/3, 3C5/0/1 2/3 | E | 1984 | AXX,BLR,BLY,BVY,BVZ,BWA | A | +/- | Left/gauche | 03/05 ▸ 11/10 | 1K0959455DL |
| 2.0 FSi 16V | 3C2/0/1/2/3 | E | 1984 | BLR,BLY | A | +/- | | 03/05 ▸ | 1K0959455R |
| 2.0 FSi 16V,2.0 TFSi 16V | 3C2/0/1/2/3, 3C5/0/1 2/3 | E | 1984 | AXX,BLR,BLY,BVY,BVZ,BWA | A | +/- | | 03/05 ▸ | 1K0959455Q |
| 2.0 FSi 16V,2.0 TFSi 16V | 3C2/0/1/2/3, 3C5/0/1 2/3 | E | 1984 | AXX,BLR,BLY,BVY,BVZ,BWA | A | +/- | | 03/05 ▸ 11/10 | 1K0959455DH |
| 2.0 FSi 16V,2.0 TFSi 16V | 3C2/0/1/2/3, 3C5/0/1 2/3 | E | 1984 | AXX,BLR,BVY,BVZ,BWA | A | +/- | Left/gauche | 03/05 ▸ | 1K0959455N |
| 3.2 FSi V6 24V | 3C2/1/2/3, 3C5/1/2/3 | E | 3168 | AXZ | A | +/- | Right/Droite | 03/05 ▸ 11/10 | 1K0959455DH |
| 3.2 FSi V6 24V | 3C2/1/2/3, 3C5/1/2/3 | E | 3168 | AXZ | A | +/- | Right/Droite | 03/05 ▸ | 1K0959455Q |
| 3.2 FSi V6 24V | 3C2/1/2/3, 3C5/1/2/3 | E | 3168 | AXZ | A | +/- | Left/gauche | 03/05 ▸ 11/10 | 1K0959455DL |
| 3.2 FSi V6 24V | 3C2/1/2/3, 3C5/1/2/3 | E | 3168 | AXZ | A | +/- | Left/gauche | 03/05 ▸ | 1K0959455N |
| 3.6 FSi V6 24V | 3C25 | E | 3598 | BLV | A | +/- | Right/Droite | 09/05 ▸ 07/10 | 1K0959455DH |
| 3.6 FSi V6 24V | 3C25 | E | 3598 | BLV | A | +/- | Left/gauche | 09/05 ▸ | 1K0959455N |
| 3.6 FSi V6 24V | 3C25 | E | 3598 | BLV | A | +/- | Right/Droite | 09/05 ▸ | 1K0959455Q |
| 3.6 FSi V6 24V | 3C25 | E | 3598 | BLV | A | +/- | Left/gauche | 09/05 ▸ 07/10 | 1K0959455DL |
| 1.9 TDi | 3C2/0/1/2/3 | D | 1896 | BLS | M | +/- | | 03/05 ▸ | 1K0959455R |
| 1.9 TDi | 3C2/0/1/2/3, 3C5/0/1 2/3 | D | 1896 | BKC,BLS,BLS/F | M | +/- | Left/gauche | 03/05 ▸ 05/08 | 1K0959455DL |
| 1.9 TDi | 3C2/0/1/2/3, 3C5/0/1 2/3 | D | 1896 | BKC,BLS | M | +/- | Right/Droite | 03/05 ▸ | 1K0959455Q |
| 1.9 TDi | 3C2/0/1/2/3, 3C5/0/1 2/3 | D | 1896 | BKC,BLS,BLS/F | M | +/- | Left/gauche | 03/05 ▸ 05/08 | 1K0959455EA |
| 1.9 TDi | 3C2/0/1/2/3, 3C5/0/1 2/3 | D | 1896 | BKC,BLS,BLS/F | M | +/- | Right/Droite | 03/05 ▸ 05/08 | 1K0959455DH |
| 1.9 TDi | 3C2/0/1/2/3, 3C5/0/1 2/3 | D | 1896 | BKC,BLS | M | +/- | Left/gauche | 03/05 ▸ | 1K0959455P |
| 1.9 TDi | 3C2/0/1/2/3, 3C5/0/1 2/3 | D | 1896 | BKC,BLS | M | +/- | Left/gauche | 03/05 ▸ | 1K0959455N |
| 1.9 TDi | 3C2/0/1/2/3, 3C5/0/1 2/3 | D | 1896 | BKC,BLS,BLS/F | M | +/- | | 03/05 ▸ 05/08 | 1K0959455DG |

# VOLKSWAGEN (.../...)

## PASSAT (2005>2010) (.../...)

| Type Ctr. | | | CC | | | AC | | | OE | Valeo | |
|---|---|---|---|---|---|---|---|---|---|---|---|
| 2.0 TDi,2.0 TDi 16V | 3C2/0/1/2/3, 3C5/0/1 2/3 | D | 1968 | BKP,BMA,BMP,BMR,BUZ,BVD,BVE | M | +/- | Right/Droite | 03/05 ▸ | 1K0959455Q | | |
| 2.0 TDi,2.0 TDi 16V | 3C2/0/1/2/3, 3C5/0/1 2/3 | D | 1968 | BKP,BMA,BMP,BMR,BVD,BVE | M | +/- | Left/gauche | 03/05 ▸ | 1K0959455N | | |
| 2.0 TDi,2.0 TDi 16V | 3C2/0/1/2/3, 3C5/0/1 2/3 | D | 1968 | BKP,BMA,BMP,BMR,BUZ,BVD,BVE CBAA/F,CBAB/F | M | +/- | Left/gauche | 03/05 ▸ | 1K0959455DL | | |
| 2.0 TDi,2.0 TDi 16V | 3C2/0/1/2/3, 3C5/0/1 2/3 | D | 1968 | BKP,BMA,BMP,BMR,BVD,BVE | A | +/- | Left/gauche | 03/05 ▸ | 1K0959455N | | |
| 2.0 TDi,2.0 TDi 16V | 3C2/0/1/2/3, 3C5/0/1 2/3 | D | 1968 | BKP,BMA,BMP,BMR,BUZ,BVD,BVE CBAA/F,CBAB/F | A | +/- | Left/gauche | 03/05 ▸ 11/10 | 1K0959455DL | | |
| 2.0 TDi,2.0 TDi 16V | 3C2/0/1/2/3, 3C5/0/1 2/3 | D | 1968 | BKP,BMA,BMP,BMR,BUZ,BVD,BVE CBAA/F,CBAB/F | A | +/- | Right/Droite | 03/05 ▸ 11/10 | 1K0959455DH | | |
| 2.0 TDi,2.0 TDi 16V | 3C2/0/1/2/3, 3C5/0/1 2/3 | D | 1968 | BKP,BMA,BMP,BMR,BUZ,BVD,BVE | A | +/- | Right/Droite | 03/05 ▸ | 1K0959455Q | | |
| 2.0 TDi,2.0 TDi 16V | 3C2/0/1/2/3, 3C5/0/1 2/3 | D | 1968 | BKP,BMA,BMP,BMR,BUZ,BVD,BVE CBAA/F,CBAB/F | M | +/- | Right/Droite | 03/05 ▸ | 1K0959455DH | | |

## POLO (74>81)

| | | | | | | | | | | | |
|---|---|---|---|---|---|---|---|---|---|---|---|
| 0.8 | 861/0/1/2 | E | 800 | HE | M | | | 01/76 ▸ 07/78 | 165959455T | **698368** | |
| 0.9 | 861/0/1/2, 862/0/1 | E | 895 | HA | M | | | 07/75 ▸ 09/81 | 165959455L | **696031** | |
| F866 2323 94 ▸ | | | | | | | | | | | |
| 1.1 | 861/0/1/2, 862/0/1/2 | E | 1093 | HB,HC,HD | M | | | 08/74 ▸ 07/81 | 165959455L | **696031** | |
| 1.3 | 861/0/1/2, 862/0/1/2 | E | 1272 | HH,HJ | M | | | 01/77 ▸ 09/81 | 165959455L | **696031** | |

## POLO (81>86)

| | | | | | | | | | | | |
|---|---|---|---|---|---|---|---|---|---|---|---|
| 1.05 | 867/0/1/2/D, 868/0/1/2/D, 871/0/1/D, 872/0/1 D, 873/0/1/2, 874/0/1/2 | E | 1043 | GL,HZ | M | | | 10/81 ▸ 07/86 | 165959455L | **696031** | |
| 1.05 | 867/0/1/2/D, 868/0/1/2/D, 871/0/1/D, 872/0/1 D, 873/0/1/2, 874/0/1/2 | E | 1043 | GL,HZ | M | | | 10/81 ▸ 07/86 | 165959455T | **698368** | |
| 1.1 | 867/0/1/2/A/B/C, 8711, 8721, 868/0/1/2/A 873/0/1/2, 874/0/1/2 | E | 1093 | HB | M | | | 10/81 ▸ 07/83 | 165959455L | **696031** | |
| 1.1 | 867/0/1/2/A/B/C, 8711, 8721, 868/0/1/2/A 873/0/1/2, 874/0/1/2 | E | 1093 | HB | M | | | 10/81 ▸ 07/83 | 165959455T | **698368** | |
| 1.3 | 867/0/1/2, 868/0/1/2, 871/0/1/3/B/D, 872/0/1 3/D, 873/0/1 | E | 1272 | GK,GT,HH,HJ,HK,HW,MH | M | | | 10/81 ▸ 07/86 | 165959455L | **696031** | |
| 1.3 | 867/0/1/2, 868/0/1/2, 871/0/1/3/B/D, 872/0/1 3/D, 873/0/1 | E | 1272 | GK,GT,HH,HJ,HK,MH | M | | | 10/81 ▸ 07/86 | 165959455T | **698368** | |

## POLO (86>90)

| | | | | | | | | | | | |
|---|---|---|---|---|---|---|---|---|---|---|---|
| 1.05 | 801/0/1/2/5/6, 802/1/2, 803/1/2/6 | E | 1043 | AAK,GL,HZ | M | | | 08/86 ▸ 10/90 | 165959455T | **698368** | |
| 1.05 | 801/0/1/2/5/6, 802/1/2, 803/1/2/6 | E | 1043 | AAK,GL,HZ | M | | | 08/86 ▸ 10/90 | 165959455L | **696031** | |
| 1.3 | 801/0/1/2/5/6, 802/1/2, 803/1/2/5/6 | E | 1272 | 2G,3F,GK,GT,MH,NU,NZ,PY | M | | | 08/86 ▸ 10/90 | 165959455T | **698368** | |
| 1.3 | 801/0/1/2/5/6, 802/1/2, 803/1/2/5/6 | E | 1272 | 2G,3F,GK,GT,MH,NU | M | | | 08/86 ▸ 10/90 | 165959455L | **696031** | |
| 1.3 | | E | 1272 | NZ | | | | 12/86 ▸ 10/90 | 165959455T | **698368** | |
| 1.3 D | 801/1/2/6, 802/1/2, 803/1/2/5/6 | D | 1272 | MN | M | | | 08/86 ▸ 10/90 | 165959455T | **698368** | |

## POLO (90>94)

| | | | | | | | | | | | |
|---|---|---|---|---|---|---|---|---|---|---|---|
| 1.05 | 801/2/5/6, 802/1/2, 803/2/6 | E | 1043 | AAU,HZ | M | | | 10/90 ▸ 10/94 | 165959455T | **698368** | |
| 1.05 | 801/2/5/6, 802/1/2, 803/2/6 | E | 1043 | AAU,HZ | M | | | 10/90 ▸ 10/94 | 165959455L | **696031** | |
| 1.3,1.3 i | 8022, 801/2/5/6, 803 2/5/6 | E | 1272 | 2G,3F,AAV,NZ,PY,PYK | M | | | 10/90 ▸ 10/94 | 165959455L | **696031** | |
| 1.3,1.3 i | 8022, 801/2/5/6, 803 2/5/6 | E | 1272 | 2G,3F,AAV,NZ,PY,PYK | M | | | 10/90 ▸ 10/94 | 165959455T | **698368** | |
| 1.4 D | 8022, 801/2/5/6, 803/2/6 | D | 1391 | 1W | M | | | 10/90 ▸ 10/94 | 1H0959455AD | **696032** | |
| 1.4 D | 8022, 801/2/5/6, 803/2/6 | D | 1391 | 1W | M | | | 10/90 ▸ 10/94 | 1H0959455 | **698370** | |

## POLO (94>99)

| | | | | | | | | | | | |
|---|---|---|---|---|---|---|---|---|---|---|---|
| 1.0 i | 6N10 | E | 999 | AER | M | + | | 07/96 ▸ 12/99 | 6X0959455A | **696042** | |
| 1.0 i | 6N10 | E | 999 | AER | M | + | | 07/96 ▸ 12/99 | 6X0959455F | **696042** | |
| 1.0 i | 6N10 | E | 999 | AER,ALL | M | - | | 07/96 ▸ 12/99 | 6N0959455D | **696041** | |
| 1.0 i | 6N10 | E | 1043 | AEV | M | - | | 10/94 ▸ 06/96 | 6N0959455D | **696041** | |
| 1.3 i | 6N10 | E | 1296 | ADX | M | - | | 10/94 ▸ 04/97 | 6N0959455D | **696041** | |
| 1.4 i,1.4 i 16V | 6N10 | E | 1390 | AEX,AFH,AKV,APQ | M | + | | 07/95 ▸ 12/99 | 6X0959455F | **696042** | |
| 1.4 i,1.4 i 16V | 6N10 | E | 1390 | AEX,AFH,AKV,APQ | M | + | | 07/95 ▸ 12/99 | 6X0959455A | **696042** | |
| 1.4 i | 6V20, 6V50 | E | 1390 | AEX,AKV,ANX,APQ | M | + | | 04/97 ▸ 08/99 | 6K0959455A | **698357** | |
| 1.4 i | 6V20, 6V50 | E | 1390 | AEX,AKV,ANX,APQ | M | + | | 04/97 ▸ 08/99 | 6K0959455B | **698358** | |
| 1.4 i,1.4 i 16V | 6N10 | E | 1390 | AEX,AFH,AKV,ANX,APQ | M | - | | 07/95 ▸ 12/99 | 6N0959455D | **696041** | |
| 1.4 i | 6V20, 6V50 | E | 1390 | AEX,AKV,ANX,APQ | M | - | | 05/96 ▸ 08/99 | 165959455T | **698368** | |
| 1.4 i | 6V20, 6V50 | E | 1390 | AEX,AKV,ANX,APQ | M | - | | 05/96 ▸ 08/99 | 6K0959455C | **698360** | |
| 1.4 i | 6V20, 6V50 | E | 1390 | AEX,AKV,ANX,APQ | M | - | | 05/96 ▸ 08/99 | 6K0959455D | **698359** | |

Fan Motor + Blades Moteur + hélice Lüftermotor + Lüfterrad Motorino + Ventola Ventilatormotor Fan motoru + Kanatlar
Moto-ventilador + Aspas Motor sahary + vrtule Ventilátor motor és lapát Motor ventilatora + lopasti ventilatora Ventilator motor + Lame Motér ανεμιστήρων + Πτερωτές



• **New** Nouveau **Nuevo** Novo **Nuovo** Nieuw **Neu** Nowość **Yeni** Новый Νέο **Novy**

# VOLKSWAGEN (.../...)

## POLO (94>99) (.../...)

| | | | CC | | | AC | | | OE | Valeo | |
|---|---|---|---|---|---|---|---|---|---|---|---|
| 1.4 i | 6N10 | E | 1390 | AEX,APQ | A | + | | 10/95 ▸ 12/99 | 6X0959455C | 696078 | |
| 1.4 i | 6N10 | E | 1390 | AEX,AKV,ANX,APQ | A | - | | 10/95 ▸ 12/99 | 6N0959455D | 696041 | |
| 1.6 i | 6V20 | E | 1595 | 1F | M | + | | 04/97 ▸ 09/97 | 6K0959455B | 698358 | |
| 6K-V-048 901 ▸ | | | | | | | | | | | |
| 1.6 i | 6V20 | E | 1595 | 1F | M | + | | 04/97 ▸ 09/97 | 6K0959455A | 698357 | |
| 6K-V-048 901 ▸ | | | | | | | | | | | |
| 1.6 i | 6V20 | E | 1595 | 1F | M | - | | 05/96 ▸ 09/97 | 6K0959455D | 698359 | |
| 1.6 i | 6V20 | E | 1595 | 1F | M | - | | 05/96 ▸ 09/97 | 1H0959455D | 698367 | |
| 1.6 i | 6V20 | E | 1595 | 1F | M | - | | 05/96 ▸ 09/97 | 6K0959455C | 698360 | |
| 1.6 i | 6N10 | E | 1598 | AEA,AEE | M | + | | 10/94 ▸ 05/99 | 6X0959455F | 696042 | |
| 1.6 i | 6N10 | E | 1598 | AEA,AEE | M | + | | 10/94 ▸ 05/99 | 6X0959455A | 696042 | |
| 1.6 i | 6V20, 6V50 | E | 1598 | AEE,AFT,ALM | M | + | | 04/97 ▸ 09/99 | 6K0959455A | 698357 | |
| 6K-V-048 901 ▸ | | | | | | | | | | | |
| 1.6 i | 6V20, 6V50 | E | 1598 | AEE,AFT,ALM | M | + | | 04/97 ▸ 09/99 | 6K0959455B | 698358 | |
| 1.6 i,1.6 i 16V | 6N10 | E | 1598 | AEA,AEE,AJV | M | - | | 10/94 ▸ 12/99 | 6N0959455D | 696041 | |
| 1.6 i | 6V20, 6V50 | E | 1598 | AEE,AFT,ALM | M | - | | 05/96 ▸ 09/99 | 6K0959455D | 698359 | |
| 1.6 i | 6V20, 6V50 | E | 1598 | AEE,AFT,ALM | M | - | | 05/96 ▸ 09/99 | 6K0959455C | 698360 | |
| 1.6 i | 6V20, 6V50 | E | 1598 | AFT | M | - | | 05/96 ▸ 09/99 | 1H0959455D | 698367 | |
| 1.6 i | 6V20, 6V50 | E | 1598 | AEE,ALM | M | - | | 09/97 ▸ 08/99 | 165959455L | 696031 | |
| 1.6 i | 6V20, 6V50 | E | 1598 | AEE,ALM | M | - | | 09/97 ▸ 08/99 | 165959455T | 698368 | |
| 1.6 i | 6N10 | E | 1598 | AEE,AHS | A | + | | 07/95 ▸ 12/99 | 6X0959455C | 696078 | |
| 1.6 i | 6V20, 6V50 | E | 1598 | AFT | A | + | | 03/98 ▸ 08/99 | 6K0959455B | 698358 | |
| 6K-V-048 901 ▸ | | | | | | | | | | | |
| 1.6 i | 6V20, 6V50 | E | 1598 | AFT | A | + | | 03/98 ▸ 08/99 | 6K0959455A | 698357 | |
| 1.6 i | 6N10 | E | 1598 | AEE,AHS | A | - | | 07/95 ▸ 12/99 | 6N0959455D | 696041 | |
| 1.6 i | 6V20, 6V50 | E | 1598 | AFT | A | - | | 03/98 ▸ 08/99 | 6K0959455D | 698359 | |
| 1.6 i | 6V20, 6V50 | E | 1598 | AFT | A | - | | 03/98 ▸ 08/99 | 6K0959455C | 698360 | |
| 1.6 i | 6V20, 6V50 | E | 1598 | AFT | A | - | | 03/98 ▸ 08/99 | 1H0959455D | 698367 | |
| 1.8 i | 6V20 | E | 1781 | ADD | M | + | | 03/98 ▸ 08/99 | 6K0959455A | 698357 | |
| 1.8 i | 6V20 | E | 1781 | ADD | M | + | | 03/98 ▸ 08/99 | 6K0959455B | 698358 | |
| 1.8 i | 6V20 | E | 1781 | ADD | M | - | | 03/98 ▸ 08/99 | 1H0959455D | 698367 | |
| 1.8 i | 6V20 | E | 1781 | ADD | M | - | | 03/98 ▸ 08/99 | 6K0959455C | 698360 | |
| 1.8 i | 6V20 | E | 1781 | ADD | M | - | | 03/98 ▸ 08/99 | 6K0959455D | 698359 | |
| 2.0 i | 6V20 | E | 1984 | ADC | M | - | | 08/99 ▸ 08/99 | 6K0959455C | 698360 | |
| 2.0 i | 6V20 | E | 1984 | ADC | M | - | | 08/99 ▸ 08/99 | 6K0959455D | 698359 | |
| 2.0 i | 6V20 | E | 1984 | ADC | A | - | | 08/99 ▸ 08/99 | 6K0959455C | 698360 | |
| 1.7 SDi | 6V20, 6V50 | D | 1716 | AKW | M | + | | 11/97 ▸ 08/99 | 6K0959455A | 698357 | |
| 1.7 SDi | 6V20, 6V50 | D | 1716 | AKW | M | + | | 11/97 ▸ 08/99 | 6K0959455B | 698358 | |
| 1.7 SDI | 6N10 | D | 1716 | AHG,AKU | M | - | | 04/97 ▸ 12/99 | 6N0959455D | 696041 | |
| 1.7 SDi | 6V20, 6V50 | D | 1716 | AKW | M | - | | 11/97 ▸ 08/99 | 6K0959455C | 698360 | |
| 1.7 SDi | 6V20, 6V50 | D | 1716 | AKW | M | - | | 11/97 ▸ 08/99 | 165959455T | 698368 | |
| 1.7 SDi | 6V20, 6V50 | D | 1716 | AKW | M | - | | 11/97 ▸ 08/99 | 165959455L | 696031 | |
| 1.7 SDi | 6V20, 6V50 | D | 1716 | AKW | M | - | | 11/97 ▸ 08/99 | 6K0959455D | 698359 | |
| 1.9 SDi | 6V20, 6V50 | D | 1896 | AEY | M | + | | 04/97 ▸ 09/99 | 6K0959455A | 698357 | |
| 6K-V-048 901 ▸ | | | | | | | | | | | |
| 1.9 SDi | 6V20, 6V50 | D | 1896 | AEY | M | + | | 04/97 ▸ 09/99 | 6K0959455C | 698360 | |
| 6K-V-048 901 ▸ | | | | | | | | | | | |
| 1.9 SDi | 6V20, 6V50 | D | 1896 | AEY | M | + | | 04/97 ▸ 09/99 | 6K0959455B | 698358 | |
| 6K-V-048 901 ▸ | | | | | | | | | | | |
| 1.9 SDi | 6V50 | D | 1896 | AEY | M | + | | 06/97 ▸ 08/99 | 6K0959455D | 698359 | |
| 6K-V-048 901 ▸ | | | | | | | | | | | |
| 1.9 D,1.9 SDI | 6N10 | D | 1896 | AEF,AGD | M | - | | 10/94 ▸ 12/99 | 6N0959455D | 696041 | |
| 1.9 SDi,1.9 TDi | 6V20, 6V50 | D | 1896 | 1Y,AEY,AFN,AHU,ALE | M | - | | 05/96 ▸ 09/99 | 6K0959455D | 698359 | |
| 1.9 SDi,1.9 TDi | 6V20, 6V50 | D | 1896 | 1Y,AFN,AHU,ALE | M | - | | 05/96 ▸ 09/99 | 6K0959455C | 698360 | |
| 1.9 SDi | 6V20, 6V50 | D | 1896 | AEY | M | - | | 05/96 ▸ 09/99 | 165959455T | 698368 | |
| 1.9 SDi | 6V20, 6V50 | D | 1896 | AEY | M | - | | 05/96 ▸ 09/99 | 165959455L | 696031 | |

## POLO (99>2001)

| | | | | | | | | | | | |
|---|---|---|---|---|---|---|---|---|---|---|---|
| 1.0 i | 6N2/0/1/2/3 | E | 999 | ALD,AUC | M | +/- | | 10/99 ▸ 09/01 | 6X0959455F | 696042 | |
| 1.0 i | 6N2/0/1/2/3 | E | 999 | ALD,AUC | M | +/- | | 10/99 ▸ | 6X0959455A | 696042 | |
| 1.0 i | 6N20 | E | 999 | ALD,AUC | M | + | | 10/99 ▸ | 6N0959455F | 696042 | |
| 1.0 i | 6N20 | E | 999 | ALD,AUC | M | + | | 10/99 ▸ | 6X0959455A | 696042 | |
| 1.0 i | 6N2/0/1/2/3 | E | 999 | ALD,AUC | M | - | | 10/99 ▸ 09/01 | 6N0959455D | 696041 | |
| 1.4 i,1.4 i 16V | 6N2/0/1/2/3/6 | E | 1390 | AFK,AHW,AKK,AKP,AUA,AUB,AUD | M | +/- | | 10/99 ▸ 09/01 | 6X0959455F | 696042 | |
| 1.4 i 16V | 6N2/0/1/2/3/6 | E | 1390 | AFK | M | +/- | | 10/99 ▸ 09/01 | 6N0959455D | 696041 | |
| 1.4 i 16V | 6N2/0/3 | E | 1390 | AHW | M | +/- | | 10/99 ▸ 09/01 | 6X0959455C | 696078 | |
| 1.4 i,1.4 i 16V | 6N2/0/1/2/3/6 | E | 1390 | AFK,AHW,AKK,AKP,AUA,AUB,AUD | M | +/- | | 10/99 ▸ | 6X0959455A | 696042 | |
| 1.4 i,1.4 i 16V | 6N20 | E | 1390 | AFK,AHW,AKK,AKP,AUA,AUD | M | + | | 10/99 ▸ | 6X0959455 | | |
| 1.4 i,1.4 i 16V | 6N20 | E | 1390 | AFK,AHW,AKK,AKP,AUA,AUD | M | + | | 10/99 ▸ | 6N0959455L | | |
| 1.4 i,1.4 i 16V | 6N2/0/1/2/3/6 | E | 1390 | AFK,AHW,AKK,AUD | M | + | | 10/99 ▸ 09/01 | 6X0959455F | 696042 | |

# VOLKSWAGEN (.../...)

## POLO (99>2001) (.../...)

| Type Ctr. | | | CC | | | AC | | | OE | Valeo |
|---|---|---|---|---|---|---|---|---|---|---|
| 1.4 i,1.4 i 16V | 6N20 | E | 1390 | AFK,AHW,AKK,AKP,AUA,AUB,AUD | M | + | | 10/99 ▸ | 6N0959455F | 696042 |
| 1.4 i,1.4 i 16V | 6V20, 6V50 | E | 1390 | AKK,ANW,APE,AUD | M | + | | 10/99 ▸ 09/01 | 6K0959455AA | 698528 |
| 1.4 i,1.4 i 16V | 6V20, 6V50 | E | 1390 | AKK,ANW,APE,AUD | M | + | | 10/99 ▸ 09/01 | 6K0959455D | 698359 |
| 1.4 i,1.4 i 16V | 6N2/0/1/2/3/6 | E | 1390 | AFK,AHW,AKK,AKP,AUA,AUB,AUD | M | + | | 10/99 ▸ | 6X0959455A | 696042 |
| 1.4 i,1.4 i 16V | 6N20 | E | 1390 | AFK,AKK,AUA,AUD | M | + | | 10/99 ▸ 09/01 | 6X0959455C | 696078 |
| 1.4 i,1.4 i 16V | 6N2/0/1/2/3/6 | E | 1390 | AFK,AHW,AKK,AKP,AUA,AUB,AUD | M | - | | 10/99 ▸ 09/01 | 6N0959455D | 696041 |
| 1.4 i,1.4 i 16V | 6N2/0/1/2/3 | E | 1390 | AHW,AKK,AUA,AUD | A | +/- | | 10/99 ▸ 09/01 | 6X0959455C | 696078 |
| 1.4 i,1.4 i 16V | 6N20 | E | 1390 | AHW,AKK,AUA | A | +/- | | 10/99 ▸ 09/01 | 6X0959455F | 696042 |
| 1.4 i,1.4 i 16V | 6N20 | E | 1390 | AHW,AKK,AUA | A | +/- | | 10/99 ▸ | 6X0959455A | 696042 |
| 1.4 i 16V | 6N20 | E | 1390 | AHW | A | +/- | | 10/99 ▸ | 6X0959455 | |
| 1.4 i,1.4 i 16V | 6N20 | E | 1390 | AHW,AKK,AUD | A | + | | 10/99 ▸ 09/01 | 6X0959455F | 696042 |
| 1.4 i,1.4 i 16V | 6N20 | E | 1390 | AHW,AKK,AUA,AUD | A | + | | 10/99 ▸ | 6X0959455A | 696042 |
| 1.4 i,1.4 i 16V | 6N20 | E | 1390 | AHW,AKK,AUA,AUD | A | + | | 10/99 ▸ | 6N0959455F | 696042 |
| 1.4 i,1.4 i 16V | 6N20 | E | 1390 | AKK,AUA,AUD | A | - | | 10/99 ▸ | 6X0959455 | |
| 1.4 i,1.4 i 16V | 6N20 | E | 1390 | AKK,AUA,AUD | A | - | | 10/99 ▸ 09/01 | 6X0959455C | 696078 |
| 1.4 i | 6N20 | E | 1390 | AUD | A | - | | 10/99 ▸ | 6X0959455A | 696042 |
| 1.4 i,1.4 i 16V | 6N2/0/1/2/3 | E | 1390 | AHW,AKK,AUA,AUD | A | - | | 10/99 ▸ 09/01 | 6N0959455D | 696041 |
| 1.6 i | 6V20, 6V50 | E | 1595 | AKL | M | + | | 10/99 ▸ 09/01 | 6K0959455AA | 698528 |
| 1.6 i | 6V20, 6V50 | E | 1595 | AKL | M | + | | 10/99 ▸ 09/01 | 6K0959455D | 698359 |
| 1.6 i | 6V20, 6V50 | E | 1595 | APF | M | - | | 03/00 ▸ 10/00 | 6K0959455AA | 698528 |
| 1.6 i | 6V20 | E | 1595 | AEH | A | + | | 10/99 ▸ 09/01 | 6K0959455B | 698358 |
| 1.6 i | 6V20, 6V50 | E | 1595 | AEH | A | - | | 10/99 ▸ 09/01 | 6K0959455AA | 698528 |
| 1.6 i | 6V20, 6V50 | E | 1595 | AEH | A | - | | 10/99 ▸ 09/01 | 6K0959455D | 698359 |
| 1.6 i 16V | 6N20 | E | 1598 | ARC | M | +/- | | 11/99 ▸ | 6X0959455A | 696042 |
| 1.6 i 16V | 6N20 | E | 1598 | ARC | M | +/- | | 11/99 ▸ 04/00 | 6X0959455F | 696042 |
| 1.6 i,1.6 i 16V | 6V20, 6V50 | E | 1598 | ALM,AUR | M | + | | 10/99 ▸ 09/01 | 6K0959455D | 698359 |
| 1.6 i,1.6 i 16V | 6V20, 6V50 | E | 1598 | ALM,AUR | M | + | | 10/99 ▸ 09/01 | 6K0959455AA | 698528 |
| 1.6 i 16V | 6N2/0/6 | E | 1598 | ARC,AVY | M | + | | 11/99 ▸ 09/01 | 6X0959455F | 696042 |
| 1.6 i 16V | 6N2/0/6 | E | 1598 | ARC,AVY | M | + | | 11/99 ▸ | 6X0959455A | 696042 |
| 1.6 i 16V | 6N20 | E | 1598 | ARC | M | + | | 11/99 ▸ | 6N0959455F | 696042 |
| 1.6 i 16V | 6N20 | E | 1598 | ARC | M | - | | 11/99 ▸ 04/00 | 6N0959455D | 696041 |
| 1.8 i | 6V20 | E | 1781 | ADD | M | + | | 03/00 ▸ 09/01 | 6K0959455A | 698357 |
| 1.8 i | 6V20 | E | 1781 | ADD | M | - | | 03/00 ▸ 09/01 | 1H0959455D | 698367 |
| 2.0 i | 6V20 | E | 1984 | ADC | M | - | | 06/00 ▸ 09/01 | 1H0959455D | 698367 |
| 2.0 i | 6V20 | E | 1984 | ADC | M | | | 06/00 ▸ 09/01 | 6K0959455A | 698357 |
| 2.0 i | 6V20 | E | 1984 | ADC | A | - | | 06/00 ▸ 09/01 | 1H0959455D | 698367 |
| 2.0 i | 6V20 | E | 1984 | ADC | A | | | 06/00 ▸ 09/01 | 6K0959455A | 698357 |
| 1.4 TDi | 6N20 | D | 1422 | AMF | M | +/- | | 10/99 ▸ | 6N0959453N | 696196 |
| 1.4 TDi | 6N2/0/1/2/3 | D | 1422 | AMF | M | +/- | | 10/99 ▸ 09/01 | 6N0959453P | 696196 |
| 1.4 TDi | 6N20 | D | 1422 | ATL | M | +/- | | 01/00 ▸ 04/00 | 6X0959455F | 696042 |
| 1.4 TDi | 6N20 | D | 1422 | ATL | M | +/- | | 01/00 ▸ 04/00 | 6X0959455A | 696042 |
| 1.4 TDi | 6N20 | D | 1422 | ATL | M | - | | 01/00 ▸ 04/00 | 6N0959455D | 696041 |
| 1.7 SDi | 6N20 | D | 1716 | AKU | M | +/- | | 10/99 ▸ 04/00 | 6X0959455F | 696042 |
| 1.7 SDi | 6N20 | D | 1716 | AKU | M | +/- | | 10/99 ▸ | 6X0959455A | 696042 |
| 1.7 SDi | 6N20 | D | 1716 | AKU | M | + | | 10/99 ▸ | 6N0959455F | 696042 |
| 1.7 SDi | 6N20 | D | 1716 | AKU | M | + | | 10/99 ▸ | 6X0959455A | 696042 |
| 1.7 SDi | 6N20 | D | 1716 | AKU | M | + | | 10/99 ▸ 04/00 | 6X0959455F | 696042 |
| 1.7 SDi | 6N20 | D | 1716 | AKU | M | - | | 10/99 ▸ 04/00 | 6N0959455D | 696041 |
| 1.9 D,1.9 SDi | 6N2/0/1/2/3 | D | 1896 | AEF,AGD | M | +/- | | 10/99 ▸ 09/01 | 6N0959455D | 696041 |
| 1.9 D | 6N20 | D | 1896 | AEF | M | +/- | | 10/99 ▸ 07/01 | 6X0959455F | 696042 |
| 1.9 D,1.9 SDi | 6N20 | D | 1896 | AEF,AGD | M | +/- | | 10/99 ▸ | 6X0959455A | 696042 |
| 1.9 D,1.9 SDi | 6N20 | D | 1896 | AEF,AGD | M | + | | 10/99 ▸ | 6X0959455A | 696042 |
| 1.9 SDi,1.9 TDi | 6V20, 6V50 | D | 1896 | AGP,AGR,ALH,AQM,ASV | M | + | | 10/99 ▸ 09/01 | 6K0959455B | 698358 |
| 1.9 SDi | 6N20 | D | 1896 | AGD | M | + | | 10/99 ▸ 09/01 | 6X0959455F | 696042 |
| 1.9 D,1.9 SDi | 6N20 | D | 1896 | AEF,AGD | M | + | | 10/99 ▸ | 6N0959455F | 696042 |
| 1.9 D,1.9 SDi | 6N2/0/1/2/3 | D | 1896 | AEF,AGD,ASX | M | - | | 10/99 ▸ 09/01 | 6N0959455D | 696041 |
| 1.9 TDi | 6V20, 6V50 | D | 1896 | AGR,ALH,ASV | M | - | | 10/99 ▸ 09/01 | 6K0959455D | 698359 |
| 1.9 TDi | 6V20, 6V50 | D | 1896 | AGR,ALH,ASV | M | - | | 10/99 ▸ 09/01 | 6K0959455AA | 698528 |

## POLO (2001>)

| | | | | | | | | | | |
|---|---|---|---|---|---|---|---|---|---|---|
| 1.2 i 6V | 9N15 | E | 1198 | AWY | M | +/- | | 11/03 ▸ 05/04 | 6Q0959455J | |
| 1.2 i 12V,1.2 i 6V | 9N1/0/1/2/3/5 | E | 1198 | AWY,AZQ | M | + | | 11/01 ▸ 07/04 | 6X0959455C | 696078 |
| 1.2 i 6V<br>9N-3-030 001 ▸ | 9N1/0/1/2 | E | 1198 | AWY | M | + | | 01/02 ▸ 07/04 | 6Q0959455J | |
| 1.2 i 12V,1.2 i 6V | 9N1/0/1/2/3/5 | E | 1198 | AWY,AZQ | M | - | | 11/01 ▸ 07/04 | 6Q0959455AF | 696019 |
| 1.2 i 6V<br>9N-3-030 001 ▸ | 9N12 | E | 1198 | AWY | M | - | | 05/02 ▸ 05/04 | 6Q0959455J | |
| 1.2 i 6V<br>9N-3-030 001 ▸ | 9N1/1/2 | E | 1198 | AWY | M | - | | 05/02 ▸ 05/04 | 6X0959455C | 696078 |

Fan Motor + Blades Moteur + hélice Lüftermotor + Lüfterrad Motorino + Ventola Ventilatormotor Fan motoru + Kanatlar
Moto-ventilador + Aspas Мотор вентилятора + лопасти вентилятора Ventilátor motor és lapát Motor sahary + vrtule Ventilator motor + Lame Μοτέρ ανεμιστήρων + Πτερωτές



• **New** Nouveau **Nuevo** Novo **Nuovo** Nieuw **Neu** Nowość **Yeni** Новый Νέο **Novy**

# VOLKSWAGEN (.../...)

## POLO (2001>) (.../...)

| | | | CC | | | AC | | | OE | Valeo | |
|---|---|---|---|---|---|---|---|---|---|---|---|
| 1.2 i 12V,1.2 i 6V<br>▸ 9N-3-030 000 | 9N1/0/1/2/3/5 | E | 1198 | AWY,AZQ | M | - | | 11/01 ▸ 05/04 | 6E0959455A | | |
| 1.4 FSI 16V | 9N1/0/1/2/3/5 | E | 1390 | AXU | M | +/- | | 02/02 ▸ 05/05 | 6X0959455C | **696078** | |
| 1.4 16V,1.4 i 16V | 9N1/0/1/2/3/5 | E | 1390 | AUA,AUB,BBY,BBZ | M | + | | 11/01 ▸ 05/05 | 6X0959455C | **696078** | |
| 1.4 16V,1.4 FSI 16V<br>1.4 i 16V | 9N1/0/1/2/3/5 | E | 1390 | AUB,AXU,BBZ | M | + | | 11/01 ▸ 05/05 | 6Q0959455J | | |
| 1.4 16V,1.4 i 16V<br>▸ 9N-4-200001 | 9N1/0/1/2/3/5, 9N2/0/1 | E | 1390 | AUA,AUB,BBY,BBZ | M | - | | 11/01 ▸ | 6Q0959455AF | **696019** | |
| 1.4 16V,1.4 FSI 16V<br>1.4 i 16V | 9N1/0/1/2/3/5 | E | 1390 | AUA,AUB,AXU,BBY | M | - | | 11/01 ▸ 05/05 | 6E0959455A | | |
| 1.4 i 16V | 9N1/0/1/2/3 | E | 1390 | BBY | A | + | | 11/01 ▸ 05/04 | 1J0959455M | **698373** | |
| 1.4 i 16V | 9N1/0/1/2/3 | E | 1390 | BBY | A | + | | 11/01 ▸ 05/04 | 6X0959455C | **696078** | |
| 1.4 i 16V<br>▸ 9N-4-200001 | 9A2/2/4, 9N1/0/1/2/3<br>9N2/0/1 | E | 1390 | BBY | A | - | | 11/01 ▸ 06/05 | 6Q0959455AF | **696019** | |
| 1.4 i 16V | 9N1/0/1/2/3 | E | 1390 | BBY | A | - | | 11/01 ▸ 05/04 | 6E0959455A | | |
| 1.9 TDi | 9N1/0/1/2/3/5 | D | 1896 | ASZ,ATD,AXR | M | +/- | | 11/01 ▸ 05/05 | 1J0959455M | **698373** | |
| 1.9 TDi | 9N1/0/1/2/3/5 | D | 1896 | ASZ,ATD,AXR | M | +/- | | 11/01 ▸ 05/05 | 6X0959455C | **696078** | |
| 1.9 SDi | 9N1/0/1/2/3 | D | 1896 | ASY | M | + | | 11/01 ▸ 05/05 | 6X0959455C | **696078** | |
| 1.9 SDi<br>▸ 9N-4-200001 | 9A2/2/4, 9N1/0/1/2/3<br>9N2/0/1 | D | 1896 | ASY | M | - | | 11/01 ▸ 06/05 | 6Q0959455AF | **696019** | |
| 1.9 SDi | 9N1/0/1/2/3 | D | 1896 | ASY | M | - | | 11/01 ▸ 05/05 | 6E0959455A | | |

## POLO (2005>)

| | | | | | | | | | | | |
|---|---|---|---|---|---|---|---|---|---|---|---|
| 1.2 i,1.2 i 12V | 9N3/0/1/3/5 | E | 1198 | BMD,BME | M | + | | 04/05 ▸ 07/07 | 6Q0959455AD | | |
| 1.2 i,1.2 i 12V | 9N3/0/1/3/5 | E | 1198 | BMD,BME | M | - | | 04/05 ▸ 07/07 | 6X0959455C | **696078** | |
| 1.2 i,1.2 i 12V | 9N3/0/1/3/5 | E | 1198 | BMD,BME | M | - | | 04/05 ▸ 07/07 | 6Q0959455AF | **696019** | |
| 1.4 i 16V | 9N3/0/1/3/5 | E | 1390 | BBZ | M | +/- | | 04/05 ▸ 05/07 | 6X0959455C | **696078** | |
| 1.4 FSi 16V,1.4 i 16V | 9N3/0/1/3/5 | E | 1390 | AXU,BBZ,BKY,BUD | M | + | | 04/05 ▸ | 6Q0959455AD | | |
| 1.4 i 16V | 9N3/0/1/3/5 | E | 1390 | BBZ,BKY,BUD | M | - | | 04/05 ▸ | 6Q0959455AF | **696019** | |
| 1.4 FSi 16V | 9N3/0/1/3 | E | 1390 | AXU | M | - | | 04/05 ▸ 05/06 | 6X0959455C | **696078** | |
| 1.4 FSi 16V | 9N3/0/1/3 | E | 1390 | AXU | M | - | | 04/05 ▸ 05/06 | 6E0959455A | | |
| 1.4 i 16V | 9N3/0/1/3/5 | E | 1390 | BKY | A | + | | 04/05 ▸ 07/07 | 6Q0959455AD | | |
| 1.4 i 16V | 9N3/0/1/3/5 | E | 1390 | BKY | A | - | | 04/05 ▸ 07/07 | 6X0959455F | **696042** | |
| 1.4 i 16V | 9N3/0/1/3/5 | E | 1390 | BKY | A | - | | 04/05 ▸ 07/07 | 6Q0959455AF | **696019** | |
| 1.4 i 16V | 9N3/0/1/3/5 | E | 1390 | BKY | A | - | | 04/05 ▸ 07/07 | 6E0959455A | | |
| 1.4 i 16V | 9N31 | E | 1390 | BKY | A | | | 04/05 ▸ 07/07 | 6E0959455A | | |
| 1.6 i 16V | 9N3/0/1/3/5 | E | 1598 | BTS | M | - | | 05/06 ▸ | 6X0959455C | **696078** | |
| 1.6 i 16V | 9N3/0/1/3/5 | E | 1598 | BTS | M | - | | 05/06 ▸ | 6Q0959455AF | **696019** | |
| 1.6 i 16V | 9N30 | E | 1598 | BTS | A | - | | 11/06 ▸ | 6Q0959455AF | **696019** | |
| 1.6 i 16V | 9N30 | E | 1598 | BTS | A | - | | 11/06 ▸ | 6X0959455C | **696078** | |
| 1.8 GTI Turbo 20V | 9N36 | E | 1781 | BBU,BJX | M | +/- | | 08/05 ▸ | 6X0959455C | **696078** | |
| 1.4 TDi | 9N3/0/1/3/5 | D | 1422 | BMS,BWB | M | +/- | | 10/05 ▸ | 6Q0959455AD | | |
| 1.9 TDi | 9N3/0/1/3 | D | 1896 | ASZ,BLT | M | +/- | | 04/05 ▸ | 6X0959455C | **696078** | |
| 1.9 TDi | 9N3/1/3/5 | D | 1896 | BMT | M | +/- | | 05/06 ▸ | 6Q0959455AD | | |
| 1.9 SDi,1.9 TDi | 9N3/0/1/3/5 | D | 1896 | ASY,ATD,AXR | M | + | | 04/05 ▸ | 6Q0959455AD | | |
| 1.9 SDi | 9N3/0/1/3 | D | 1896 | ASY | M | - | | 04/05 ▸ | 6Q0959455AF | **696019** | |
| 1.9 TDi | 9N3/0/1/3/5 | D | 1896 | ATD,AXR | M | - | | 04/05 ▸ | 6X0959455C | **696078** | |

## SANTANA

| | | | | | | | | | | | |
|---|---|---|---|---|---|---|---|---|---|---|---|
| 1.3 | 327/0/5 | E | 1297 | EP | M | - | | 08/83 ▸ 12/84 | 165959455T | **698368** | |
| 1.3 | 327/0/5 | E | 1297 | EP | M | - | | 08/83 ▸ 12/84 | 165959455L | **696031** | |
| 1.6 | 327/6/B | E | 1588 | WV,YP | M | - | | 08/81 ▸ 07/84 | 165959455L | **696031** | |
| 1.6 | 327/6/B | E | 1588 | WV,YP | M | - | | 08/81 ▸ 07/84 | 165959455T | **698368** | |
| 1.6 | 327/6/7 | E | 1588 | WV,YP | A | - | | 08/81 ▸ 07/84 | 165959455L | **696031** | |
| 1.6 | 327/6/7 | E | 1588 | WV,YP | A | - | | 08/81 ▸ 07/84 | 165959455T | **698368** | |
| 1.6 | 327/0/1/2/5/6/7/A | E | 1595 | DT,JU | M | - | | 08/83 ▸ 03/88 | 165959455L | **696031** | |
| 1.6 | 327/0/1/2/5/6/7/A | E | 1595 | DT,JU | M | - | | 08/83 ▸ 03/88 | 165959455T | **698368** | |
| 1.6 | 327/5/6 | E | 1595 | DT | A | - | | 08/84 ▸ 03/88 | 165959455L | **696031** | |
| 1.6 | 327/5/6 | E | 1595 | DT | A | - | | 08/84 ▸ 03/88 | 165959455T | **698368** | |
| 1.8<br>▸ 32-G-230 000 | 3276 | E | 1781 | JV | M | + | | 06/86 ▸ 03/88 | 327959455A | **696038** | |
| 1.8,1.8 i | 327/5/6/7/B/C/G | E | 1781 | DS,JN,JV | M | - | | 01/83 ▸ 03/88 | 165959455L | **696031** | |
| 1.8,1.8 i | 327/5/6/7/B/C/G/H | E | 1781 | DS,JN,JV | M | - | | 01/83 ▸ 03/88 | 165959455T | **698368** | |
| 1.8,1.8 i | 327/0/1/5/G/H | E | 1781 | DS,JN | A | - | | 08/83 ▸ 03/88 | 165959455T | **698368** | |
| 1.8,1.8 i | 327/0/1/5/G | E | 1781 | DS,JN | A | - | | 08/83 ▸ 03/88 | 165959455L | **696031** | |
| 1.9 | 3276 | E | 1921 | WN | M | - | | 08/81 ▸ 07/83 | 165959455T | **698368** | |
| 1.9 | 3276 | E | 1921 | WN | A | - | | 08/81 ▸ 07/83 | 165959455T | **698368** | |

# VOLKSWAGEN (.../...)

## SANTANA (.../...)

| | | | CC | | | AC | | | | Valeo |
|---|---|---|---|---|---|---|---|---|---|---|
| 2.0 i | 3286, 327/6/7 | E | 1994 | HP,JS | M | - | | 08/83 ▸ 03/88 | 165959455T | **698368** |
| 2.0 i | 327/1/6/7 | E | 1994 | HP,JS | A | - | | 08/83 ▸ 03/88 | 165959455T | **698368** |
| 1.6 D | 327/5/6/7 | D | 1588 | CR,JK | M | - | | 08/81 ▸ 03/88 | 165959455T | **698368** |
| 1.6 D | 327/5/6 | D | 1588 | CR,JK | A | - | | 08/81 ▸ 07/84 | 165959455T | **698368** |

## SCIROCCO (2008>)

| | | | | | | | | | | |
|---|---|---|---|---|---|---|---|---|---|---|
| 1.4 TSI 16V | 1372 | E | 1390 | CAVD | M | +/- | Left/gauche | 08/08 ▸ | 1K0959455EA | |
| 1.4 TSI 16V | 1372 | E | 1390 | CAVD | A | +/- | Left/gauche | 11/08 ▸ | 1K0959455EA | |
| 2.0 TDI 16V | 1372 | D | 1968 | CBDB/F | M | +/- | Left/gauche | 05/09 ▸ | 1K0959455EA | |
| 2.0 TDI 16V | 1372 | D | 1968 | CBDB/F | A | +/- | Left/gauche | 10/08 ▸ | 1K0959455EA | |

## SHARAN (95>2000)

| | | | | | | | | | | |
|---|---|---|---|---|---|---|---|---|---|---|
| 1.8 i Turbo 20V | 7M8/2/3/5/9 | E | 1781 | AJH | M | +/- | | 11/97 ▸ 02/00 | 8D0959455C | **698155** |
| 1.8 i Turbo 20V | 7M8/2/3/5/9 | E | 1781 | AJH | A | +/- | | 11/97 ▸ 02/00 | 8D0959455C | **698155** |
| 2.0 i | 7M8/2/3/5/9 | E | 1984 | ADY | M | + | | 09/95 ▸ 02/00 | 8D0959455C | **698155** |
| 2.0 i | 7M8/2/3/5/9 | E | 1984 | ADY | M | - | | 09/95 ▸ 02/00 | 6N0959455D | **696041** |
| 2.0 i | 7M8/2/3/5/9 | E | 1984 | ADY | A | + | | 09/95 ▸ 02/00 | 8D0959455C | **698155** |
| 1.9 TDi | 7M8/2/3/5/9 | D | 1896 | AFN,ANU | M | +/- | | 01/97 ▸ 02/00 | 8D0959455C | **698155** |
| 1.9 TDi | 7M8/2/3/5/9 | D | 1896 | 1Z,AHU | M | + | | 09/95 ▸ 02/00 | 8D0959455C | **698155** |
| 1.9 TDi | 7M8/2/3/5/9 | D | 1896 | 1Z,AHU | M | - | | 09/95 ▸ 02/00 | 6N0959455D | **696041** |
| 1.9 TDi | 7M8/2/3/5/9 | D | 1896 | AFN | A | +/- | | 12/96 ▸ 07/99 | 8D0959455C | **698155** |

## TIGUAN

| | | | | | | | | | | |
|---|---|---|---|---|---|---|---|---|---|---|
| 2.0 TSi 16V | 5N1/0/1/2 | E | 1984 | CAWA,CAWB | M | +/- | Right/Droite | 11/07 ▸ | 1K0959455DH | |
| 2.0 TSi 16V | 5N1/0/1/2 | E | 1984 | CAWA,CAWB | M | +/- | Left/gauche | 11/07 ▸ | 1K0959455DL | |
| 2.0 TSi 16V | 5N1/0/1/2 | E | 1984 | CAWA,CAWB | A | +/- | Left/gauche | 11/07 ▸ | 1K0959455DL | |
| 2.0 TSi 16V | 5N1/0/1/2 | E | 1984 | CAWA,CAWB | A | +/- | Right/Droite | 11/07 ▸ | 1K0959455DH | |
| 2.0 TDi 16V | 5N1/0/1/2 | D | 1968 | CBAA/F,CBAB/F,CBBA/F,CBBB/F | M | +/- | Right/Droite | 11/07 ▸ | 1K0959455DH | |
| 2.0 TDi 16V | 5N1/0/1/2 | D | 1968 | CBAA/F,CBAB/F,CBBA/F,CBBB/F | M | +/- | Left/gauche | 11/07 ▸ | 1K0959455DL | |
| 2.0 TDi 16V | 5N1/0/1/2 | D | 1968 | CBAA/F,CBAB/F | A | +/- | Left/gauche | 11/07 ▸ | 1K0959455DL | |
| 2.0 TDi 16V | 5N1/0/1/2 | D | 1968 | CBAA/F,CBAB/F | A | +/- | Right/Droite | 11/07 ▸ | 1K0959455DH | |

## TOURAN (2003>2006)

| | | | | | | | | | | |
|---|---|---|---|---|---|---|---|---|---|---|
| 1.6 FSi 16V | 1T1/B/H/T | E | 1598 | BAG,BLP | M | | Left/gauche | 07/03 ▸ | 1K0959455BC | |
| 1T-4-016 001 ▸ | | | | | | | | | | |
| 1.6 FSi 16V | 1T1/B/H/T | E | 1598 | BAG,BLP | M | | Left/gauche | 07/03 ▸ | 1K0959455P | |
| 1T-4-016 001 ▸ | | | | | | | | | | |
| 1.6 FSi 16V | 1T1/B/H/T | E | 1598 | BAG,BLP | M | | Left/gauche | 07/03 ▸ 12/04 | 1K0959455EA | |
| 1T-4-016 001 ▸ | | | | | | | | | | |
| 1.6 FSi 16V | 1T1/B/H/T | E | 1598 | BAG,BLP | M | | Right/Droite | 07/03 ▸ 12/04 | 1K0959455DG | |
| 1T-4-016 001 ▸ | | | | | | | | | | |
| 1.6 FSi 16V | 1T1/B/H/T | E | 1598 | BAG,BLP | A | | Left/gauche | 07/03 ▸ | 1K0959455P | |
| 1T-4-016 001 ▸ | | | | | | | | | | |
| 1.6 FSi 16V | 1T1/B/H/T | E | 1598 | BAG,BLP | A | | Left/gauche | 07/03 ▸ | 1K0959455BC | |
| 1T-4-016 001 ▸ | | | | | | | | | | |
| 1.6 FSi 16V | 1T1/B/H/T | E | 1598 | BAG,BLP | A | | Right/Droite | 07/03 ▸ | 1K0959455R | |
| 1T-4-016 001 ▸ | | | | | | | | | | |
| 1.6 FSi 16V | 1T1/B/H/T | E | 1598 | BAG,BLP | A | | Right/Droite | 07/03 ▸ 12/04 | 1K0959455DG | |
| 1T-4-016 001 ▸ | | | | | | | | | | |
| 1.6 FSi 16V | 1T1/B/H/T | E | 1598 | BAG,BLP | A | | Left/gauche | 07/03 ▸ 12/04 | 1K0959455EA | |
| 1T-4-016 001 ▸ | | | | | | | | | | |
| 1.6 FSi 16V | 1T1/B/H/T | E | 1598 | BAG,BLP | M | | Right/Droite | 07/03 ▸ | 1K0959455R | |

## TOURAN (2006>2010)

| | | | | | | | | | | |
|---|---|---|---|---|---|---|---|---|---|---|
| 2.0 i | 1T2/C/H/T | F | 1984 | BSX | M | +/- | Left/gauche | 11/06 ▸ 05/09 | 1K0959455EA | |
| 2.0 i | 1T2/C/H/T | F | 1984 | BSX | M | +/- | | 11/06 ▸ 05/09 | 1K0959455DG | |
| 2.0 i | 1T2/C/H/T | F | 1984 | BSX | M | +/- | | 11/06 ▸ | 1K0959455P | |
| 2.0 i | 1T2/C/H | F | 1984 | BSX | M | + | | 11/06 ▸ 05/09 | 1K0959455DG | |
| 2.0 i | 1T2/C/H/T | F | 1984 | BSX | M | + | Left/gauche | 11/06 ▸ 05/09 | 1K0959455EA | |
| 1.4 TSi | 1T2/A/C/H/T | E | 1390 | BMY | M | +/- | Left/gauche | 11/06 ▸ | 1K0959455P | |
| 1.4 TSi | 1T2/A/C/H/T | E | 1390 | BMY | M | +/- | Right/Droite | 11/06 ▸ 11/08 | 1K0959455DG | |
| 1.4 TSi | 1T2/A/C/H/T | E | 1390 | BMY | M | +/- | Left/gauche | 11/06 ▸ 11/08 | 1K0959455EA | |
| 1.4 TSi | 1T2/A/C/H/T | E | 1390 | BMY | M | + | Left/gauche | 11/06 ▸ | 1K0959455N | |
| 1.4 TSi | 1T2/A/C/H/T | E | 1390 | BMY | M | + | Left/gauche | 11/06 ▸ 11/08 | 1K0959455DL | |
| 1.4 TSi | 1T2/A/C/H/T | E | 1390 | BLG,BMY | A | +/- | Left/gauche | 11/06 ▸ | 1K0959455N | |
| 1.4 TSi | 1T2/A/C/H/T | E | 1390 | BLG,BMY | A | +/- | Left/gauche | 11/06 ▸ 05/09 | 1K0959455DL | |
| 1.4 TSi | 1T2/A/C/H/T | E | 1390 | BMY | A | +/- | Left/gauche | 11/06 ▸ | 1K0959455P | |
| 1.4 TSi | 1T2/A/C/H/T | E | 1390 | BMY | A | +/- | Left/gauche | 11/06 ▸ 12/08 | 1K0959455EA | |
| 1.4 TSi | 1T2/A/H | E | 1390 | BLG | A | + | | 11/06 ▸ | 1K0959455P | |
| 1.4 TSi | 1T2/A/H | E | 1390 | BLG | A | + | Left/gauche | 11/06 ▸ 05/09 | 1K0959455EA | |

Fan Motor + Blades Moteur + hélice Lüftermotor + Lüfterrad Motorino + Ventola Ventilatormotor Fan motoru + Kanatlar
Moto-ventilador + Aspas Мотор вентилятора + лопасти вентилятора Ventilátor motor és lapát Motor sahary + vrtule Ventilator motor + Lame Μοτέρ ανεμιστήρων + Πτερωτές



• **New** Nouveau **Nuevo** Novo **Nuovo** Nieuw **Neu** Nowość **Yeni** Новый Νέο **Novy**

# VOLKSWAGEN (.../...)

## TOURAN (2006>2010) (.../...)

| | | | CC | | AC | | | | OE | Valeo | |
|---|---|---|---|---|---|---|---|---|---|---|---|
| 1.4 TSi | 1T2/A/C/H/T | E | 1390 | BLG,BMY | A | - | Right/Droite | 11/06 ▸ 05/09 | 1K0959455DH | | |
| 1.6 i | 1T2/A/C/T | E | 1595 | BSE,BSF | M | +/- | Left/gauche | 11/06 ▸ | 1K0959455P | | |
| 1.6 i | 1T2/A/C/T | E | 1595 | BSE,BSF | M | +/- | Left/gauche | 11/06 ▸ 05/10 | 1K0959455EA | | |
| 1.6 i | 1T2/A/C/T | E | 1595 | BSE,BSF | M | +/- | | 11/06 ▸ 05/10 | 1K0959455DG | | |
| 1.6 i | 1T2/A/C/T | E | 1595 | BSE,BSF | M | + | | 11/06 ▸ 05/10 | 1K0959455DG | | |
| 1.6 FSi | 1T2A | E | 1598 | BLF | M | +/- | Right/Droite | 11/06 ▸ 01/07 | 1K0959455DG | | |
| 1.6 FSi | 1T2A | E | 1598 | BLF | M | + | Left/gauche | 11/06 ▸ 01/07 | 1K0959455EA | | |
| 1.6 FSi | 1T2A | E | 1598 | BLF | M | + | Left/gauche | 11/06 ▸ 01/07 | 1K0959455P | | |
| 1.6 FSi | 1T2H | E | 1598 | BLF | A | + | Left/gauche | 11/06 ▸ | 1K0959455P | | |
| 1.6 FSi | 1T2H | E | 1598 | BLF | A | + | Left/gauche | 11/06 ▸ 01/07 | 1K0959455EA | | |
| 1.6 FSi | 1T2H | E | 1598 | BLF | A | + | Right/Droite | 11/06 ▸ 01/07 | 1K0959455DG | | |
| 2.0 FSi | 1T2/G/H/T | E | 1984 | BVY,BVZ | M | +/- | Left/gauche | 11/06 ▸ 01/07 | 1K0959455N | | |
| 2.0 FSi | 1T2/G/H/T | E | 1984 | BVY,BVZ | M | +/- | Left/gauche | 11/06 ▸ 01/07 | 1K0959455P | | |
| 2.0 FSi | 1T2/G/H/T | E | 1984 | BVY,BVZ | M | +/- | Left/gauche | 11/06 ▸ 01/07 | 1K0959455EA | | |
| 2.0 FSi | 1T2/G/H/T | E | 1984 | BVY,BVZ | M | +/- | Left/gauche | 11/06 ▸ 01/07 | 1K0959455DL | | |
| 2.0 FSi | 1T2/G/H/T | E | 1984 | BVY,BVZ | M | +/- | Right/Droite | 11/06 ▸ 01/07 | 1K0959455DG | | |
| 2.0 FSi | 1T2/G/H/T | E | 1984 | BVY | M | - | Right/Droite | 11/06 ▸ 01/07 | 1K0959455DH | | |
| 2.0 FSi | 1THT, 1T2/G/H/T | E | 1984 | BVY,BVZ | A | +/- | Left/gauche | 11/06 ▸ 01/07 | 1K0959455N | | |
| 2.0 FSi | 1THT, 1T2/G/H/T | E | 1984 | BVY,BVZ | A | +/- | Left/gauche | 11/06 ▸ 01/07 | 1K0959455DL | | |
| 2.0 FSi | 1THT, 1T2/G/H/T | E | 1984 | BVY,BVZ | A | - | Left/gauche | 11/06 ▸ 01/07 | 1K0959455P | | |
| 2.0 FSi | 1T2/G/H/T | E | 1984 | BVY | A | - | Right/Droite | 11/06 ▸ 01/07 | 1K0959455DH | | |
| 2.0 FSi | 1THT, 1T2/G/H/T | E | 1984 | BVY,BVZ | A | - | Right/Droite | 11/06 ▸ 01/07 | 1K0959455DG | | |
| 2.0 FSi | 1THT, 1T2/G/H/T | E | 1984 | BVY,BVZ | A | - | Left/gauche | 11/06 ▸ 01/07 | 1K0959455EA | | |
| 1.9 TDi | 1T2/A/C/H/T | D | 1896 | BLS,BXF,BXJ | M | + | Left/gauche | 11/06 ▸ 05/10 | 1K0959455DL | | |
| 1.9 TDi | 1T2/A/C/H/T | D | 1896 | BLS,BXE,BXF,BXJ | M | + | Left/gauche | 11/06 ▸ | 1K0959455N | | |
| 1.9 TDi | 1T2/A/C/H/T | D | 1896 | BLS | M | + | | 11/06 ▸ 05/10 | 1K0959455DG | | |
| 1.9 TDi | 1T2/A/C/H/T | D | 1896 | BLS,BXE,BXF,BXJ | M | - | | 11/06 ▸ 05/10 | 1K0959455DG | | |
| 1.9 TDi | 1T2/A/C/H/T | D | 1896 | BLS | A | + | Left/gauche | 11/06 ▸ 05/10 | 1K0959455DL | | |
| 1.9 TDi | 1T2/A/C/H/T | D | 1896 | BLS | A | + | Left/gauche | 11/06 ▸ | 1K0959455N | | |
| 1.9 TDi | 1T2/A/C/H/T | D | 1896 | BLS | A | - | Left/gauche | 11/06 ▸ 05/10 | 1K0959455EA | | |
| 1.9 TDi | 1T2/A/C/H/T | D | 1896 | BLS | A | - | Right/Droite | 11/06 ▸ 05/10 | 1K0959455DG | | |
| 1.9 TDi | 1T2/A/C/H/T | D | 1896 | BLS | A | - | Left/gauche | 11/06 ▸ | 1K0959455P | | |
| 1.9 TDi | 1T2/A/C/H/T | D | 1896 | BLS,BXE,BXF,BXJ | M | +/- | Left/gauche | 11/06 ▸ 05/10 | 1K0959455EA | | |
| ▸ 1T-7-200 000 | | | | | | | | | | | |
| 1.9 TDi | 1T2/A/C/H/T | D | 1896 | BLS,BXE,BXF,BXJ | M | +/- | Left/gauche | 11/06 ▸ | 1K0959455P | | |
| ▸ 1T-7-200 000 | | | | | | | | | | | |
| 2.0 TDi | 1T2/A/H/T | D | 1968 | AZV,BKD,BMM/F | M | +/- | Left/gauche | 11/06 ▸ | 1K0959455P | | |
| 2.0 TDi | 1T2/A/H/T | D | 1968 | AZV,BKD,BMM/F,BMN | M | +/- | Right/Droite | 11/06 ▸ 05/10 | 1K0959455DG | | |
| 2.0 TDi | 1T2/A/H/T | D | 1968 | AZV,BKD,BMM/F | M | +/- | Left/gauche | 11/06 ▸ 05/10 | 1K0959455EA | | |
| 2.0 TDi | 1T2/A/H/T | D | 1968 | AZV,BKD,BMM/F,BMN | M | + | Left/gauche | 11/06 ▸ | 1K0959455N | | |
| 2.0 TDi | 1T2/A/H/T | D | 1968 | AZV,BKD,BMM/F,BMN | M | + | Left/gauche | 11/06 ▸ 05/10 | 1K0959455DL | | |
| 2.0 TDi | 1T2/A/H | D | 1968 | BMN | M | - | Left/gauche | 11/06 ▸ | 1K0959455P | | |
| 2.0 TDi | 1T2/A/H | D | 1968 | BMN | M | - | Left/gauche | 11/06 ▸ 05/10 | 1K0959455EA | | |
| 2.0 TDi | 1T2/A/H/T | D | 1968 | BKD,BMM/F | A | +/- | Left/gauche | 11/06 ▸ | 1K0959455P | | |
| 2.0 TDi | 1T2/A/H/T | D | 1968 | BKD,BMM/F | A | +/- | Left/gauche | 11/06 ▸ 05/10 | 1K0959455EA | | |
| 2.0 TDi | 1T2/A/H/T | D | 1968 | BKD,BMM/F,BMN | A | +/- | Right/Droite | 11/06 ▸ 05/10 | 1K0959455DG | | |
| 2.0 TDi | 1T2/A/H/T | D | 1968 | BKD,BMM/F,BMN | A | + | Left/gauche | 11/06 ▸ | 1K0959455N | | |
| 2.0 TDi | 1T2/A/H/T | D | 1968 | BKD,BMM/F,BMN | A | + | Left/gauche | 11/06 ▸ 05/10 | 1K0959455DL | | |
| 2.0 TDi | 1T2/A/H | D | 1968 | BMN | A | - | Left/gauche | 11/06 ▸ 05/10 | 1K0959455EA | | |
| 2.0 TDi | 1T2/A/H | D | 1968 | BMN | A | - | Left/gauche | 11/06 ▸ | 1K0959455P | | |

## TOURAN (2010>)

| | | | | | | | | | | | |
|---|---|---|---|---|---|---|---|---|---|---|---|
| 1.4 TSI CNG 150 16V | 1T3/2/3/4/C | F | 1390 | CDGA | M | +/- | Left/gauche | 05/10 ▸ | 1K0959455EA | | |
| 1.4 TSI CNG 150 16V | 1T3/2/3/4/C | F | 1390 | CDGA | A | +/- | Left/gauche | 05/10 ▸ | 1K0959455EA | | |
| 1.4 TSi 16V | 1T3/2/3/4/C | E | 1390 | CAVC | M | +/- | Left/gauche | 05/10 ▸ | 1K0959455EA | | |
| 1.4 TSi 16V | 1T3/2/3/4/C | E | 1390 | CAVB,CAVC | A | +/- | Left/gauche | 05/10 ▸ | 1K0959455EA | | |

## VENTO

| | | | | | | | | | | | |
|---|---|---|---|---|---|---|---|---|---|---|---|
| 1.4 i | 1H2/2/3 | E | 1391 | ABD | M | - | | 11/91 ▸ 07/95 | 1H0959455D | **698367** | |
| 1.6 i | 1H2/2/3/4/5/B | E | 1598 | ABU,AEE,AFT,AKS | M | - | | 07/92 ▸ 12/97 | 1H0959455D | **698367** | |
| 1.6 i | 1H2/2/3/5 | E | 1598 | AEA,AEE,AEK | M | - | | 10/94 ▸ 12/97 | 1H0959455 | **698370** | |
| 1.6 i | 1H2/2/3/4/B | E | 1598 | AFT | A | - | | 12/95 ▸ 12/97 | 1H0959455D | **698367** | |
| 1.8 i | 1H33, 1H2/2/3/4/5 | E | 1781 | AAM,ADZ | M | - | | 11/91 ▸ 12/97 | 1H0959455 | **698370** | |
| 1.8 i | 1H33, 1H2/2/3/4/5 | E | 1781 | AAM,ABS,ADZ | M | - | | 11/91 ▸ 12/97 | 1H0959455D | **698367** | |
| 1.8 i | 1H2/2/3/4 | E | 1781 | AAM,ADZ | A | - | | 01/92 ▸ 12/97 | 1H0959455D | **698367** | |
| 2.0 E | 1H2/2/3/4/5 | E | 1984 | 2E,ADY,AEP,AGG | M | - | | 11/91 ▸ 12/97 | 1H0959455D | **698367** | |
| 2.0 E | 1H24 | E | 1984 | ADY | A | +/- | | 07/95 ▸ 04/96 | 1H0959455AD | **696032** | |
| 2.0 E | 1H2/2/3/4 | E | 1984 | AEP,AGG | A | - | | 10/94 ▸ 12/97 | 1H0959455D | **698367** | |
| 2.8 i VR6 | 1H2/5/7 | E | 2792 | AAA | M | +/- | | 01/92 ▸ 12/97 | 1H0959455AD | **696032** | |
| 2.8 i,2.8 i VR6 | 1H2/5/7 | E | 2792 | AAA | A | +/- | | 07/92 ▸ 12/97 | 1H0959455AD | **696032** | |

# VOLKSWAGEN (.../...)

## VENTO (.../...)

| | | | CC | | | AC | | | OE | Valeo | |
|---|---|---|---|---|---|---|---|---|---|---|---|
| 1.9 SDi,1.9 TD,1.9 TDi | 1H2/2/3/4/5/B | D | 1896 | 1Z,AAZ,AEY | M | +/- | | 11/91 ▸ 12/97 | 1H0959455AD | **696032** | |
| 1.9 SDi,1.9 TDi | 1H2/2/3/4/5/B | D | 1896 | 1Z,AEY,AFN,AHU,ALE | M | - | | 08/93 ▸ 12/97 | 1H0959455D | **698367** | |
| 1.9 SDi,1.9 TDi | 1H2/2/3/4/5/B | D | 1896 | 1Z,AEY | M | - | | 08/93 ▸ 12/97 | 1H0959455 | **698370** | |
| 1.9 TD,1.9 TDi | 1H2/2/3/4/B | D | 1896 | 1Z,AAZ | A | +/- | | 01/92 ▸ 07/96 | 1H0959455AD | **696032** | |
| 1.9 TDi | 1H2/2/3/4/B | D | 1896 | 1Z,AFN,AHU | A | - | | 09/93 ▸ 12/97 | 1H0959455D | **698367** | |

# VOLKSWAGEN

## CADDY (82>92)

| | | | | | | | | | | | |
|---|---|---|---|---|---|---|---|---|---|---|---|
| 1.5 | 147/0/7/8/9, 148/0/7/8/9 | E | 1457 | JB | M | - | | 08/82 ▸ 07/83 | 165959455T | **698368** | |
| 1.6 | 147/0/7/8/9 | E | 1588 | EM | M | - | | 08/82 ▸ 07/83 | 165959455T | **698368** | |
| 1.6 | 147/0/7/8/9 | E | 1588 | EM | A | - | | 08/82 ▸ 07/83 | 165959455T | **698368** | |
| 1.6 | 147/0/7/8/9, 1AE1, 148/0/7/8/9 | E | 1595 | EW,HN | M | - | | 08/83 ▸ 07/92 | 165959455T | **698368** | |
| 1.6 | 147/0/7/8, 1AE1, 148/0/7/8 | E | 1595 | EW,HN | A | - | | 08/83 ▸ 07/92 | 165959455T | **698368** | |
| 1.8 i | 147/0/7/8, 1AE1, 148/0/7/8 | E | 1781 | JH | M | - | | 08/85 ▸ 07/92 | 165959455T | **698368** | |
| 1.8 i | 147/0/7/8, 1AE1, 148/0/7/8 | E | 1781 | JH | A | - | | 08/85 ▸ 07/92 | 165959455T | **698368** | |
| 1.6 D | 147/0/7/8/9, 1AE1, 148/0/7/8/9 | D | 1588 | JK,ME | M | - | | 08/82 ▸ 07/92 | 165959455T | **698368** | |

## CADDY (95>2004)

| | | | | | | | | | | | |
|---|---|---|---|---|---|---|---|---|---|---|---|
| 1.4 i<br>9K-V-520 001 ▸ | 9K9/A/B | E | 1390 | AEX,APQ | M | + | | 02/97 ▸ 06/03 | 6K0959455A | **698357** | |
| 1.4 i<br>9K-V-520 001 ▸ | 9K9/A/B | E | 1390 | AEX,AKV,APQ | M | + | | 02/97 ▸ 09/00 | 6K0959455B | **698358** | |
| 1.6 i<br>9K-V-520 001 ▸ | 9K9/A/B | E | 1595 | 1F | M | + | | 02/97 ▸ 05/97 | 6K0959455A | **698357** | |
| 1.6 i | 9K9/A/B | E | 1595 | 1F | M | - | | 11/95 ▸ 05/97 | 1H0959455D | **698367** | |
| 1.6 i | 9U71, 9K9/A/B | E | 1598 | AEE | M | + | | 06/96 ▸ 09/00 | 6K0959455A | **698357** | |
| 1.6 i | 9U71, 9K9/A/B | E | 1598 | AEE | M | - | | 06/96 ▸ 08/00 | 165959455T | **698368** | |
| 1.7 SDi<br>9K-V-520 001 ▸ | 9K9/A/B | D | 1716 | AHB | M | + | | 02/97 ▸ 09/00 | 6K0959455A | **698357** | |
| 1.7 SDi<br>9K-V-520 001 ▸ | 9K9/A/B | D | 1716 | AHB | M | + | | 02/97 ▸ 09/00 | 6K0959455B | **698358** | |
| 1.7 SDi | 9K9/A/B | D | 1716 | AHB | M | - | | 07/96 ▸ 09/00 | 165959455T | **698368** | |
| 1.9 D | 9K9/A/B | D | 1896 | 1Y | M | +/- | | 11/95 ▸ 06/03 | 6K0959455A | **698357** | |
| 1.9 D | 9K9/A/B | D | 1896 | 1Y | M | +/- | | 11/95 ▸ 06/03 | 6K0959455B | **698358** | |
| 1.9 SDi<br>9K-V-520 001 ▸ | 9K9/A/B | D | 1896 | AEY | M | + | | 02/97 ▸ 09/00 | 6K0959455A | **698357** | |
| 1.9 SDi<br>9K-V-520 001 ▸ | 9K9/A/B | D | 1896 | AEY | M | + | | 02/97 ▸ 09/00 | 6K0959455B | **698358** | |
| 1.9 TDi | 9K9/A/B | D | 1896 | ALH | M | + | | 09/00 ▸ 06/03 | 6K0959455AA | **698528** | |
| 1.9 SDi | 9K9/A/B | D | 1896 | AEY | M | - | | 11/95 ▸ 09/00 | 165959455T | **698368** | |
| 1.9 TDi | 9K9/A/B | D | 1896 | ALH | M | - | | 09/00 ▸ 06/03 | 6K0959455D | **698359** | |
| 1.9 D<br>9K-V-520 001 ▸ 9K-1-512 000 | 9K9/A/B | D | 1896 | 1Y | M | + | | 02/97 ▸ 09/00 | 6K0959455D | **698359** | |
| 1.9 D | 9K9/A/B | D | 1896 | 1Y | M | + | | 02/97 ▸ 09/00 | 6K0959455C | **698360** | |

## CADDY (2004>2010)

| | | | | | | | | | | | |
|---|---|---|---|---|---|---|---|---|---|---|---|
| 2.0 i CNG | 2KHA | F | 1984 | BSX | M | +/- | Left/gauche | 04/06 ▸ 08/10 | 1K0959455EA | | |
| 2.0 i CNG | 2KA/A/B, 2KB/C/D | F | 1984 | BSX | M | + | Left/gauche | 04/06 ▸ 08/10 | 1K0959455EA | | |
| 2.0 i CNG | 2KA/A/B, 2KB/C/D | F | 1984 | BSX | M | + | Left/gauche | 04/06 ▸ | 1K0959455P | | |
| 1.4 i 16V | 2KA/A/B, 2KB/C/D | E | 1390 | BCA,BUD | M | + | Left/gauche | 02/04 ▸ | 1K0959455P | | |
| 1.4 i 16V | 2KA/A/B, 2KB/C/D | E | 1390 | BCA,BUD | M | + | Left/gauche | 02/04 ▸ 08/10 | 1K0959455EA | | |
| 1.4 i 16V | 2KA/A/B, 2KB/C/D | E | 1390 | BCA | M | + | Right/Droite | 02/04 ▸ 05/06 | 1K0959455DG | | |
| 1.4 i 16V | 2KA/A/B, 2KB/C/D | E | 1390 | BCA | M | + | Right/Droite | 02/04 ▸ | 1K0959455R | | |
| 1.6 i | 2KA/A, 2KB/C/D | E | 1595 | BGU | M | +/- | Right/Droite | 02/04 ▸ | 1K0959455R | | |
| 1.6 i | 2KA/A/B, 2KHA, 2KB/C/D, 2KJ/C/E | E | 1595 | BGU,BSE,BSF | M | +/- | Left/gauche | 04/04 ▸ 08/10 | 1K0959455EA | | |
| 1.6 i | 2KA/A/B, 2KB/C/D | E | 1595 | BGU,BSE,BSF | M | +/- | | 04/04 ▸ | 1K0959455P | | |
| 1.6 i | 2KA/A, 2KB/C/D | E | 1595 | BGU | M | +/- | Right/Droite | 04/04 ▸ 05/05 | 1K0959455DG | | |
| 1.6 i | 2KA/A/B, 2KHA, 2KB/C/D, 2KJ/C/E | E | 1595 | BSE,BSF | M | - | Right/Droite | 06/05 ▸ 08/10 | 1K0959455DG | | |
| 1.9 TDi | 2KA/A/B, 2KB/C/D | D | 1896 | BJB,BLS,BSU | M | +/- | Left/gauche | 02/04 ▸ | 1K0959455P | | |
| 1.9 TDi | 2KA/A/B, 2KHA, 2KB/C D, 2KJ/C/E | D | 1896 | BJB,BLS,BSU | M | +/- | Left/gauche | 02/04 ▸ 08/10 | 1K0959455EA | | |
| 1.9 TDi | 2KA/A/B, 2KB/C/D | D | 1896 | BJB,BLS | M | +/- | Right/Droite | 02/04 ▸ | 1K0959455R | | |
| 1.9 TDi | 2KA/A/B, 2KB/C/D | D | 1896 | BJB,BLS | M | +/- | Right/Droite | 02/04 ▸ 08/10 | 1K0959455DG | | |
| 1.9 TDi | 2KAA, 2KBD | D | 1896 | BJB | M | + | Right/Droite | 02/04 ▸ | 1K0959455R | | |
| 1.9 TDi | 2KAA, 2KBD | D | 1896 | BJB | M | + | Right/Droite | 02/04 ▸ 08/10 | 1K0959455DG | | |
| 1.9 TDi | 2KA/A/B, 2KB/C/D | D | 1896 | BJB,BLS,BSU | M | + | Left/gauche | 02/04 ▸ | 1K0959455N | | |
| 1.9 TDi | 2KA/A/B, 2KB/C/D | D | 1896 | BJB,BLS,BSU | M | + | Right/Droite | 02/04 ▸ 08/10 | 1K0959455DH | | |
| 1.9 TDi | 2KA/A/B, 2KB/C/D | D | 1896 | BJB,BLS,BSU | M | + | Right/Droite | 02/04 ▸ | 1K0959455Q | | |

Fan Motor + Blades Moteur + hélice Lüftermotor + Lüfterrad Motorino + Ventola Ventilatormotor Fan motoru + Kanatlar
Moto-ventilador + Aspas Мотор вентилятора + лопасти вентилятора Ventilátor motor és lapát Motor sahary + vrtule Ventilator motor + Lame Μοτέρ ανεμιστήρων + Πτερωτές



• **New** Nouveau **Nuevo** Novo **Nuovo** Nieuw **Neu** Nowość **Yeni** Новый Νέο **Novy**

# VOLKSWAGEN (.../...)

## CADDY (2004>2010) (.../...)

| | | | CC | | | AC | | | OE | Valeo | |
|---|---|---|---|---|---|---|---|---|---|---|---|
| 1.9 TDi | 2KA/A/B, 2KHA, 2KB/C D, 2KJ/C/E | D | 1896 | BJB,BLS,BSU | M | - | Right/Droite | 09/05 ▸ 08/10 | 1K0959455DG | | |
| 1.9 TDi | 2KA/A/B, 2KHA, 2KB/C D, 2KJ/C/E | D | 1896 | BLS | M | - | Left/gauche | 09/07 ▸ 08/10 | 1K0959455EA | | |
| 1.9 TDi | 2KH/A, 2KJ/C/E | D | 1896 | BJB | M | - | Right/Droite | 11/07 ▸ 08/10 | 1K0959455DH | | |
| 1.9 TDi | 2KA/A/B, 2KB/C/D | D | 1896 | BLS | A | +/- | Right/Droite | 06/05 ▸ | 1K0959455R | | |
| 1.9 TDi | 2KA/A/B, 2KB/C/D | D | 1896 | BLS | A | +/- | Left/gauche | 06/05 ▸ 08/10 | 1K0959455EA | | |
| 1.9 TDi | 2KA/A/B, 2KB/C/D | D | 1896 | BLS | A | +/- | Left/gauche | 06/05 ▸ | 1K0959455P | | |
| 1.9 TDi | 2KA/A/B, 2KB/C/D | D | 1896 | BLS | A | +/- | Right/Droite | 06/05 ▸ 08/10 | 1K0959455DG | | |
| 1.9 TDi | 2KA/A/B, 2KB/C/D | D | 1896 | BLS | A | + | Right/Droite | 06/05 ▸ | 1K0959455Q | | |
| 1.9 TDi | 2KA/A/B, 2KB/C/D | D | 1896 | BLS | A | + | Left/gauche | 06/05 ▸ | 1K0959455N | | |
| 1.9 TDi | 2KA/A/B, 2KB/C/D | D | 1896 | BLS | A | + | Right/Droite | 06/05 ▸ 08/10 | 1K0959455DH | | |
| 1.9 TDi | 2KBD, 2KHA, 2KA/A/B C, 2KJ/C/E | D | 1896 | BLS | A | - | Right/Droite | 11/07 ▸ 08/10 | 1K0959455DG | | |
| 1.9 TDi | 2KBD, 2KHA, 2KA/A/B C, 2KJ/C/E | D | 1896 | BLS | A | - | | 11/07 ▸ 08/10 | 1K0959455EA | | |
| 2.0 TDi | 2KA/A/B, 2KHA, 2KB/C D, 2KJ/C/E | D | 1968 | BMM/F | M | +/- | Left/gauche | 05/08 ▸ 08/10 | 1K0959455EA | | |
| 2.0 SDi | 2KA/A/B, 2KB/C/D | D | 1968 | BDJ,BST | M | + | Left/gauche | 02/04 ▸ | 1K0959455P | | |
| 2.0 SDi | 2KA/A/B, 2KB/C/D | D | 1968 | BDJ,BST | M | + | Right/Droite | 02/04 ▸ | 1K0959455R | | |
| 2.0 SDi | 2KA/A/B, 2KB/C/D | D | 1968 | BDJ,BST | M | + | Right/Droite | 02/04 ▸ 08/10 | 1K0959455DG | | |
| 2.0 SDi | 2KA/A/B, 2KB/C/D | D | 1968 | BDJ,BST | M | + | Left/gauche | 02/04 ▸ 08/10 | 1K0959455EA | | |

## CRAFTER

| | | | | | | | | | | | |
|---|---|---|---|---|---|---|---|---|---|---|---|
| 2.5 TDi | 2EA/0/1, 2EB/0/1 2ED/0/1, 2EH1, 2EK1, 2EX1, 2EY1, 2EE/0/1 2FL1, 2FM1, 2FG/0/1, 2FZ/0/1 | D | 2460 | BJJ,BJK,BJL,BJM | M | + | | 04/06 ▸ | 2E0959455A | **696083** | |
| 2.5 TDi | 2EA/0/1, 2EB/0/1 2ED/0/1, 2EH1, 2EK1, 2EX1, 2EY1, 2EE/0/1 | D | 2460 | BJJ,BJK,BJL,BJM | M | + | | 04/06 ▸ | 2E0959455 | **696082** | |
| 2.5 TDi | 2FC/0/1, 2FF/0/1 | D | 2460 | BJJ,BJK,BJL,BJM | M | | | 04/06 ▸ | 2E0959455A | **696083** | |

## TRANSPORTER (F70) (90>96)

| | | | | | | | | | | | |
|---|---|---|---|---|---|---|---|---|---|---|---|
| 1.8 | 70H1, 70C/3, 70J/1/C/K/M, 70L1, 70K/2/3 | E | 1781 | PD | M | +/- | | 09/90 ▸ 07/92 | 327959455A | **696038** | |
| 1.8 | 70A/1, 70C2, 70E1, 70M1, 70B/1/C/K/M | E | 1781 | PD | M | - | | 09/90 ▸ 07/92 | 701959455AM | **696043** | |
| 1.8 | 70A/1, 70C2, 70E1, 70M1, 70B/1/C/K/M | E | 1781 | PD | M | - | | 12/90 ▸ 07/92 | 701959455J | **696179** | |
| 1.8 | 70A/1, 70C2, 70E1, 70M1, 70B/1/C/K/M | E | 1781 | PD | M | - | | 12/90 ▸ 07/92 | 701959455AE | **696043** | |
| 1.8 | 70A/1, 70C2, 70E1, 70M1, 70B/1/C/K/M | E | 1781 | PD | M | - | | 12/90 ▸ 07/92 | 701959455L | | |
| 1.8 | 70A/1, 70C2, 70E1, 70M1, 70B/1/C/K/M | E | 1781 | PD | M | - | | 12/90 ▸ 07/92 | 327959455A | **696038** | |
| 1.8 | 70H1, 70C/3, 70J/1/C/K/M, 70L1, 70K/2/3 | E | 1781 | PD | M | | | 09/90 ▸ 07/92 | 701959455J | **696179** | |
| 1.8 | 70H1, 70C/3, 70J/1/C/K/M, 70L1, 70K/2/3 | E | 1781 | PD | M | | | 09/90 ▸ 07/92 | 701959455AM | **696043** | |
| 2.0 | 70A/1, 70C2, 70E1, 70H1, 70B/1/K/M, 70J/1/K M, 70L1, 70M1, 70K/2/3 | E | 1968 | AAC | M | +/- | | 09/90 ▸ 12/95 | 701959455AE | **696043** | |
| 2.0 | 70A/1, 70C2, 70E1, 70H1, 70B/1/K/M, 70J/1/K M, 70L1, 70M1, 70K/2/3 | E | 1968 | AAC | M | +/- | | 09/90 ▸ 12/95 | 701959455AM | **696043** | |
| 2.0 | 70A/1, 70C2, 70E1, 70H1, 70B/1/K/M, 70J/1/K M, 70L1, 70M1, 70K/2/3 | E | 1968 | AAC | M | +/- | | 09/90 ▸ 12/95 | 701959455L | | |
| 2.0 | 70A/1, 70B/1/K/M/T, 70E1, 70H1, 70C/2/3, 70J 1/C/K/M/T/W, 70L1, 70M1, 70K/2/3 | E | 1968 | AAC | M | +/- | | 09/90 ▸ 12/95 | 327959455A | **696038** | |
| 2.0 | 70A/1, 70C2, 70E1, 70H1, 70B/1/K/M, 70J/1/K M, 70L1, 70M1, 70K/2/3 | E | 1968 | AAC | M | +/- | | 09/90 ▸ 12/95 | 701959455J | **696179** | |
| 2.0 | 70BC | E | 1968 | AAC | M | - | | 09/90 ▸ 07/94 | 327959455A | **696038** | |
| 2.0 | 70BC | E | 1968 | AAC | M | - | | 09/90 ▸ 07/94 | 701959455AM | **696043** | |
| 2.0 | 70BC | E | 1968 | AAC | M | - | | 09/90 ▸ 07/94 | 701959455J | **696179** | |
| 2.0 | 70BC | E | 1968 | AAC | M | - | | 09/90 ▸ 12/95 | 701959455AE | **696043** | |
| 2.0 | 70BC | E | 1968 | AAC | M | - | | 09/90 ▸ 07/94 | 701959455L | | |
| 2.0 | 70C3, 70B/T, 70J/C/T/W | E | 1968 | AAC | M | | | 09/90 ▸ 12/95 | 701959455J | **696179** | |
| 2.0 | 70C3, 70B/T, 70J/C/T/W | E | 1968 | AAC | M | | | 09/90 ▸ 12/95 | 701959455AM | **696043** | |
| 2.0 | 70A/1, 70B/C/K | E | 1968 | AAC | A | +/- | | 09/90 ▸ 07/93 | 701959455J | **696179** | |
| 2.0 | 70A/1, 70B/1/C/K/M/T, 70E1, 70H1, 70C/2/3 70J/1/C/K/T, 70L1, 70M1, 70K/2/3 | E | 1968 | AAC | A | +/- | | 09/90 ▸ 07/93 | 327959455A | **696038** | |
| 2.0 | 70A/1, 70B/C/K | E | 1968 | AAC | A | +/- | | 09/90 ▸ 07/93 | 701959455AM | **696043** | |
| 2.0 | 70A/1, 70B/C/K | E | 1968 | AAC | A | +/- | | 09/90 ▸ 07/93 | 701959455L | | |
| 2.0 | 70A/1, 70B/C/K | E | 1968 | AAC | A | +/- | | 09/90 ▸ 12/95 | 701959455AE | **696043** | |
| 2.0 | 70BC | E | 1968 | AAC | A | - | | 09/90 ▸ 12/94 | 701959455AE | **696043** | |
| 2.0 | 70BC | E | 1968 | AAC | A | - | | 08/92 ▸ 07/93 | 701959455AM | **696043** | |
| 2.0 | 70BC | E | 1968 | AAC | A | - | | 08/92 ▸ 07/93 | 701959455J | **696179** | |
| 2.0 | 70BC | E | 1968 | AAC | A | - | | 08/92 ▸ 07/93 | 701959455L | | |
| 2.0 | 70BC | E | 1968 | AAC | A | - | | 08/92 ▸ 07/93 | 327959455A | **696038** | |
| 2.0 | 70B/1/K/M/T, 70E1, 70H1, 70C/2/3, 70J/1/C/K T, 70L1, 70M1, 70K/2/3 | E | 1968 | AAC | A | | | 09/90 ▸ 07/93 | 701959455J | **696179** | |

# VOLKSWAGEN (.../...)

## TRANSPORTER (F70) (90>96) (.../...)

| | | | CC | | | AC | | | OE | Valeo |
|---|---|---|---|---|---|---|---|---|---|---|
| 2.0 | 70B/1/K/M/T, 70E1, 70H1, 70C/2/3, 70J/1/C/K T, 70L1, 70M1, 70K/2/3 | E | 1968 | AAC | A | | | 09/90 ▸ 07/93 | 701959455AM | **696043** |
| 2.5 | 70A/1, 70B/1/K/M/T, 70E1, 70H1, 70C/2/3, 70J 1/C/K/M/T/W, 70L1, 70M1, 70K/2/3 | E | 2460 | AAF,ACU | M | +/- | | 09/90 ▸ 12/95 | 327959455A | **696038** |
| 2.5 | 70A/1, 70C2, 70E1, 70H1, 70B/1/K/M/T, 70J/1 K/M/W, 70L1, 70M1, 70K/2/3 | E | 2460 | AAF,ACU | M | +/- | | 09/90 ▸ 12/95 | 701959455AM | **696043** |
| 2.5 | 70A/1, 70C2, 70E1, 70H1, 70B/1/K/M/T, 70J/1 K/M/W, 70L1, 70M1, 70K/2/3 | E | 2460 | AAF,ACU | M | +/- | | 11/90 ▸ 12/95 | 701959455J | **696179** |
| 2.5 | 70A/1, 70C2, 70E1, 70H1, 70B/1/K/M/T, 70J/1 K/M/W, 70L1, 70M1, 70K/2/3 | E | 2460 | AAF,ACU | M | +/- | | 11/90 ▸ 12/95 | 701959455AE | **696043** |
| 2.5 | 70A/1, 70C2, 70E1, 70H1, 70B/1/K/M/T, 70J/1 K/M/W, 70L1, 70M1, 70K/2/3 | E | 2460 | AAF,ACU | M | +/- | | 11/90 ▸ 12/95 | 701959455L | |
| 2.5 | 70A/1, 70B/1/C/K/M/T, 70E1, 70H1, 70C/2/3 70J/1/K/W, 70L1, 70M1, 70K/2/3 | E | 2460 | AAF,AEN | M | - | | 09/90 ▸ 12/95 | 327959455A | **696038** |
| 2.5 | 70A/1, 70B/1/C/K/M/T, 70E1, 70H1, 70C/2/3 70J/1/K/W, 70L1, 70M1, 70K/2/3 | E | 2460 | AAF,AEN | M | - | | 09/90 ▸ 12/95 | 701959455L | |
| 2.5 | 70A/1, 70B/1/C/K/M/T, 70E1, 70H1, 70C/2/3 70J/1/K/W, 70L1, 70M1, 70K/2/3 | E | 2460 | AAF,AEN | M | - | | 09/90 ▸ 12/95 | 701959455J | **696179** |
| 2.5 | 70A/1, 70B/1/C/K/M/T, 70E1, 70H1, 70C/2/3 70J/1/K/W, 70L1, 70M1, 70K/2/3 | E | 2460 | AAF,AEN | M | - | | 09/90 ▸ 12/95 | 701959455AM | **696043** |
| 2.5 | 70A/1, 70B/1/C/K/M/T, 70E1, 70H1, 70C/2/3 70J/1/K/W, 70L1, 70M1, 70K/2/3 | E | 2460 | AAF,AEN | M | - | | 09/90 ▸ 12/95 | 701959455AE | **696043** |
| 2.5,2.5 i | 70A/1, 70B/1/C/K/M/T 70E1, 70H1, 70C/2/3, 70J/1/C/K/T, 70L1 70M1, 70K/2/3/K | E | 2460 | AAF,ACU | M | | | 09/90 ▸ 05/96 | 701959455J | **696179** |
| 2.5,2.5 i | 70A/1, 70B/1/C/K/M/T 70E1, 70H1, 70C/2/3, 70J/1/C/K/T, 70L1 70M1, 70K/2/3/K | E | 2460 | AAF,ACU | M | | | 09/90 ▸ 05/96 | 701959455AM | **696043** |
| 2.5 | 70A/1, 70C2, 70E1, 70H1, 70B/1/C/K/M/T, 70K2 70L1, 70M1, 70J/1/K/W | E | 2460 | AAF,ACU | A | +/- | | 09/90 ▸ 12/95 | 701959455AE | **696043** |
| 2.5 | 70A/1, 70C2, 70E1, 70H1, 70B/1/C/K/M/T, 70K2 70L1, 70M1, 70J/1/K/W | E | 2460 | AAF,ACU | A | +/- | | 10/91 ▸ 12/95 | 701959455AM | **696043** |
| 2.5 | 70A/1, 70C2, 70E1, 70H1, 70B/1/C/K/M/T, 70K2 70L1, 70M1, 70J/1/K/W | E | 2460 | AAF,ACU | A | +/- | | 10/91 ▸ 12/95 | 701959455J | **696179** |
| 2.5 | 70A/1, 70C2, 70E1, 70H1, 70B/1/C/K/M/T, 70K2 70L1, 70M1, 70J/1/K/W | E | 2460 | AAF,ACU | A | +/- | | 10/91 ▸ 12/95 | 701959455L | |
| 2.5 | 70A/1, 70B/1/C/K/M/T, 70E1, 70H1, 70C/2/3 70J/1/C/K/M/T/W, 70L1, 70M1, 70K/2/3 | E | 2460 | AAF,ACU | A | +/- | | 10/91 ▸ 12/95 | 327959455A | **696038** |
| 2.5 | 70B/1/K/M/T, 70E1, 70H1, 70C/2/3, 70J/1/C/K M/T, 70L1, 70M1, 70K/2/3 | E | 2460 | AAF,ACU | A | | | 10/91 ▸ 12/95 | 701959455J | **696179** |
| 2.5 | 70A/1, 70B/1/K/M/T, 70E1, 70H1, 70C/2/3, 70J 1/C/K/M/T, 70L1, 70M1, 70K/2/3 | E | 2460 | AAF,ACU | A | | | 10/91 ▸ 12/95 | 701959455AM | **696043** |
| 1.9 D,1.9 TD | 70C3, 70B/C/T, 70J/T W | D | 1896 | 1X,ABL | M | +/- | | 09/90 ▸ 12/95 | 327959455A | **696038** |
| 1.9 D | 70BC | D | 1896 | 1X | M | +/- | | 09/90 ▸ 07/94 | 701959455AM | **696043** |
| 1.9 D | 70BC | D | 1896 | 1X | M | +/- | | 09/90 ▸ 07/94 | 701959455J | **696179** |
| 1.9 D | 70BC | D | 1896 | 1X | M | +/- | | 09/90 ▸ 07/94 | 701959455L | |
| 1.9 D | 70BC | D | 1896 | 1X | M | +/- | | 09/90 ▸ 12/95 | 701959455AE | **696043** |
| 1.9 D,1.9 TD | 70A/1, 70B/1/K/M/T 70E1, 70H1, 70C/2/3, 70J/1/C/K/M/T, 70L1 70M1, 70K/2/3 | D | 1896 | 1X,ABL | M | - | | 09/90 ▸ 12/95 | 327959455A | **696038** |
| 1.9 D,1.9 TD | 70A/1, 70B/1/K/M/T 70E1, 70H1, 70C/2/3, 70J/1/C/K/M/T, 70L1 70M1, 70K/2/3 | D | 1896 | 1X,ABL | M | - | | 09/90 ▸ 12/95 | 701959455J | **696179** |
| 1.9 D,1.9 TD | 70A/1, 70B/1/K/M/T 70E1, 70H1, 70C/2/3, 70J/1/C/K/M/T, 70L1 70M1, 70K/2/3 | D | 1896 | 1X,ABL | M | - | | 09/90 ▸ 12/95 | 701959455AM | **696043** |
| 1.9 D,1.9 TD | 70A/1, 70B/1/K/M/T 70E1, 70H1, 70C/2/3, 70J/1/C/K/M/T, 70L1 70M1, 70K/2/3 | D | 1896 | 1X,ABL | M | - | | 09/90 ▸ 12/95 | 701959455AE | **696043** |
| 1.9 D,1.9 TD | 70A/1, 70B/1/K/M/T 70E1, 70H1, 70C/2/3, 70J/1/C/K/M/T, 70L1 70M1, 70K/2/3 | D | 1896 | 1X,ABL | M | - | | 09/90 ▸ 12/95 | 701959455L | |
| 1.9 D,1.9 TD | 70C3, 70B/T, 70J/T/W | D | 1896 | 1X,ABL | M | | | 09/90 ▸ 12/95 | 701959455AM | **696043** |
| 1.9 D,1.9 TD | 70C3, 70B/T, 70J/T/W | D | 1896 | 1X,ABL | M | | | 09/90 ▸ 12/95 | 701959455J | **696179** |
| 2.4 D | 70A/1, 70C2, 70E1, 70H1, 70B/1/C/K/M, 70J/1 K, 70L1, 70M1, 70K/2/3 | D | 2370 | AAB | M | +/- | | 09/90 ▸ 12/95 | 701959455L | |
| 2.4 D | 70A/1, 70C2, 70E1, 70H1, 70B/1/C/K/M, 70J/1 K, 70L1, 70M1, 70K/2/3 | D | 2370 | AAB | M | +/- | | 09/90 ▸ 12/95 | 701959455AE | **696043** |

Fan Motor + Blades Moteur + hélice Lüftermotor + Lüfterrad Motorino + Ventola Ventilatormotor Fan motoru + Kanatlar
Moto-ventilador + Aspas Мотор вентилятора + лопасти вентилятора Ventilátor motor és lapát Motor sahary + vrtule Ventilator motor + Lame Μοτέρ ανεμιστήρων + Πτερωτές



• **New** Nouveau **Nuevo** Novo **Nuovo** Nieuw **Neu** Nowość **Yeni** Новый Νέο **Novy**

# VOLKSWAGEN (.../...)

## TRANSPORTER (F70) (90>96) (.../...)

| | | | CC | | | AC | | | OE | Valeo | |
|---|---|---|---|---|---|---|---|---|---|---|---|
| 2.4 D | 70A/1, 70C2, 70E1, 70H1, 70B/1/C/K/M, 70J/1 K, 70L1, 70M1, 70K/2/3 | D | 2370 | AAB | M | +/- | | 09/90 ▸ 12/95 | 701959455AM | **696043** | |
| 2.4 D | 70A/1, 70C2, 70E1, 70H1, 70B/1/C/K/M, 70J/1 K, 70L1, 70M1, 70K/2/3 | D | 2370 | AAB | M | +/- | | 09/90 ▸ 12/95 | 701959455J | **696179** | |
| 2.4 D | 70A/1, 70B/1/C/K/M/T, 70E1, 70H1, 70C/2/3 70J/1/C/K/T/W, 70L1, 70M1, 70K/2/3 | D | 2370 | AAB | M | +/- | | 09/90 ▸ 12/95 | 327959455A | **696038** | |
| 2.4 D | 70A/1, 70B/1/C/K/M/T, 70E1, 70H1, 70C/2/3 70J/1/C/T/W, 70L1, 70M1, 70K/2/3/K | D | 2370 | AAB | M | | | 09/90 ▸ 05/96 | 701959455AM | **696043** | |
| 2.4 D | 70A/1, 70B/1/C/K/M/T, 70E1, 70H1, 70C/2/3 70J/1/C/T/W, 70L1, 70M1, 70K/2/3/K | D | 2370 | AAB | M | | | 09/90 ▸ 05/96 | 701959455J | **696179** | |
| 2.4 D | 70A1 | D | 2370 | AAB | A | +/- | | 09/90 ▸ 12/95 | 701959455AE | **696043** | |
| 2.4 D | 70A1 | D | 2370 | AAB | A | +/- | | 05/92 ▸ 12/95 | 701959455J | **696179** | |
| 2.4 D | 70A1 | D | 2370 | AAB | A | +/- | | 05/92 ▸ 12/95 | 701959455AM | **696043** | |
| 2.4 D | 70A/1, 70B/1/K/M/T, 70E1, 70H1, 70C/2/3, 70J 1/C/K/M/T/W, 70L1, 70M1, 70K/2/3 | D | 2370 | AAB | A | +/- | | 05/92 ▸ 12/95 | 327959455A | **696038** | |
| 2.4 D | 70A1 | D | 2370 | AAB | A | +/- | | 05/92 ▸ 12/95 | 701959455L | | |
| 2.4 D | 70B/1/K/M/T, 70E1, 70H1, 70C/2/3, 70J/1/C/K M/T/W, 70L1, 70M1, 70K/2/3 | D | 2370 | AAB | A | | | 05/92 ▸ 12/95 | 701959455J | **696179** | |
| 2.4 D | 70B/1/K/M/T, 70E1, 70H1, 70C/2/3, 70J/1/C/K M/T/W, 70L1, 70M1, 70K/2/3 | D | 2370 | AAB | A | | | 05/92 ▸ 12/95 | 701959455AM | **696043** | |
| 2.5 TDI | 70A/1, 70B/1/K/M/T 70E1, 70C/2/3, 70H/1/3, 70K2, 70L1, 70M1 70J/1/K/W | D | 2460 | ACV | M | +/- | | 09/95 ▸ 12/95 | 327959455A | **696038** | |
| 2.5 TDI | 70A/1, 70B/1/K/M/T 70E1, 70C/2/3, 70H/1/3, 70K2, 70L1, 70M1 70J/1/K/W | D | 2460 | ACV | M | | | 09/95 ▸ 12/95 | 701959455J | **696179** | |
| 2.5 TDI | 70A/1, 70B/1/K/M/T 70E1, 70C/2/3, 70H/1/3, 70K2, 70L1, 70M1 70J/1/K/W | D | 2460 | ACV | M | | | 09/95 ▸ 12/95 | 701959455AM | **696043** | |

## TRANSPORTER (F7D) (96>2003)

| | | | | | | | | | | | |
|---|---|---|---|---|---|---|---|---|---|---|---|
| 2.0 i | 7DA/1, 7DB/1/K, 7DE1, 7DH1, 7DC/2/3/A/G/M/T 7DJ/1/K, 7DL1, 7DM1, 7DK/2/3/M/W | E | 1968 | AAC | M | +/- | | 01/96 ▸ 06/03 | 7D0959455M | | |
| 2.0 i | 7DA/1, 7DB/1/K, 7DH1, 7DC/2/A/G/T/U, 7DL1 7DM1, 7DK/2/3/M/W | E | 1968 | AAC | M | +/- | | 01/96 ▸ 06/03 | 701959455AM | **696043** | |
| 2.0 i | 7DA/1, 7DB/1/K, 7DE1, 7DH1, 7DC/2/3/A/G/M/T 7DJ/1/K, 7DL1, 7DM1, 7DK/2/3/M/W | E | 1968 | AAC | M | +/- | | 01/96 ▸ | 7D0959455J | | |
| 2.0 i | 7DA/1, 7DB/1/K, 7DE1, 7DH1, 7DC/2/3/A/G/M/T 7DJ/1/K, 7DL1, 7DM1, 7DK/2/3/M/W | E | 1968 | AAC | M | - | | 01/96 ▸ | 701959455AE | **696043** | |
| 2.0 i | 7DA/1, 7DB/1/K, 7DE1, 7DH1, 7DC/2/3/A/G/M/T 7DJ/1/K, 7DL1, 7DM1, 7DK/2/3/M/W | E | 1968 | AAC | M | - | | 01/96 ▸ | 701959455C | **696043** | |
| 2.0 i | 7DA/1, 7DB/1/K, 7DE1, 7DH1, 7DC/2/3/A/G/M/T 7DJ/1/K, 7DL1, 7DM1, 7DK/2/3/M/W | E | 1968 | AAC | M | - | | 01/96 ▸ | 701959455A | **696043** | |
| 2.0 i | 7DA/1, 7DB/1/K, 7DE1, 7DH1, 7DC/2/3/A/M, 7DJ 1/K, 7DM1, 7DK/2/3/M | E | 1968 | AAC | M | - | | 01/96 ▸ 06/03 | 701959455AM | **696043** | |
| 2.0 i | 7DCU | E | 1968 | AAC | M | - | | 08/98 ▸ 06/03 | 7D0959455M | | |
| 2.5 i | 7DA/1, 7DB/1/K, 7DE1, 7DH1, 7DC/1/2/3/A/M/T U, 7DJ/1/K, 7DL1, 7DM1, 7DK/2/3/T/W | E | 2460 | ACU,AET,AEU,APL,AVT | M | +/- | | 01/96 ▸ 06/03 | 701959455AM | **696043** | |
| 2.5 i | 7DA/1, 7DB/1/K, 7DE1, 7DH1, 7DC/1/2/3/A/G/M T, 7DJ/1/K, 7DL1, 7DM1, 7DK/2/3/T/W | E | 2460 | ACU,AET,AEU | M | +/- | | 01/96 ▸ | 7D0959455J | | |
| 2.5 i | 7DA/1, 7DB/1/K, 7DE1, 7DH1, 7DC/1/2/3/A/G/M T/U, 7DJ/1/K, 7DL1, 7DM1, 7DK/2/3/T/W | E | 2460 | ACU,AET,AEU,APL,AVT | M | +/- | | 01/96 ▸ 06/03 | 7D0959455M | | |
| 2.5 i | 7DA/1, 7DB/1/K, 7DE1, 7DH1, 7DC/1/2/3/A/G/M T/U, 7DJ/1/K, 7DL1, 7DM1, 7DK/2/3/T/W | E | 2460 | ACU,AET,AEU | M | +/- | | 01/96 ▸ 06/03 | 701959455J | **696179** | |
| 2.5 i | 7DA/1, 7DB/1/K, 7DE1, 7DH1, 7DC/2/M/T/U, 7DJ 1/K, 7DL1, 7DM1, 7DK/2/T | E | 2460 | AEU | M | + | | 05/97 ▸ 06/03 | 7D0959455K | | |
| 2.5 i | 7DA/1, 7DB/1/K, 7DE1, 7DH1, 7DC/2/M/T/U, 7DJ 1/K, 7DL1, 7DM1, 7DK/2/J/T | E | 2460 | AET,AEU,AVT | M | + | | 05/97 ▸ 06/03 | 701959455J | **696179** | |
| 2.5 i | 7DA/1, 7DB/1/K, 7DE1, 7DH1, 7DC/2/3/A/G/M/T 7DJ/1/K, 7DL1, 7DM1, 7DK/2/3/T/W | E | 2460 | ACU,AET,AEU | M | - | | 01/96 ▸ | 701959455A | **696043** | |
| 2.5 i | 7DA/1, 7DB/1/K, 7DE1, 7DH1, 7DC/2/M/T/U, 7DJ 1/K, 7DL1, 7DM1, 7DK/2/J/T | E | 2460 | ACU,AET,AVT | M | - | | 01/96 ▸ 06/03 | 7D0959455M | | |
| 2.5 i | 7DE1, 7DH1, 7DJ1, 7DL1, 7DA/1 | E | 2460 | ACU,AEU | M | - | | 01/96 ▸ | 7D0959455J | | |
| 2.5 i | 7DA/1, 7DB/1/K, 7DE1, 7DH1, 7DC/1/2/3/A/G/M T, 7DJ/1/K, 7DL1, 7DM1, 7DK/2/3/T/W | E | 2460 | ACU,AET,AEU | M | - | | 01/96 ▸ | 701959455AE | **696043** | |
| 2.5 i | 7DA/1, 7DB/1/K, 7DE1, 7DH1, 7DC/2/A/G/M/T/U 7DJ/1/K, 7DL1, 7DM1, 7DK/2/3/J/T/W | E | 2460 | ACU,AET,AEU,APL,AVT | M | - | | 01/96 ▸ 06/03 | 701959455AM | **696043** | |
| 2.5 i | 7DA/1, 7DB/1/K, 7DE1, 7DH1, 7DC/2/3/A/G/M/T U, 7DJ/1/K, 7DL1, 7DM1, 7DK/2/3/T/W | E | 2460 | ACU,AET,AEU,APL | A | +/- | | 01/96 ▸ 06/03 | 701959455J | **696179** | |

# VOLKSWAGEN (.../...)

## TRANSPORTER (F7D) (96>2003) (.../...)

| Type Ctr. | | CC | | | AC | | 2+3 | OE | Valeo | |
|---|---|---|---|---|---|---|---|---|---|---|
| 2.5 i | 7DA/1, 7DB/1/K, 7DE1, 7DH1, 7DC/2/G/M/T/U 7DJ/1/K, 7DL1, 7DM1, 7DK/2/3/T | E | 2460 | ACU,AET,AEU,APL,AVT | A | +/- | | 01/96 ▸ 06/03 | 701959455AM | **696043** |
| 2.5 i | 7DJK, 7DK2, 7DL1, 7DE/1 | E | 2460 | ACU,AET | A | +/- | | 01/96 ▸ 06/03 | 7D0959455K | |
| 2.5 i | 7DA/1, 7DB/1/K, 7DE1, 7DH1, 7DC/2/3/A/G/M/T 7DJ/1/K, 7DL1, 7DM1, 7DK/2/3/T/W | E | 2460 | ACU,AET,AEU | A | +/- | | 01/96 ▸ | 7D0959455G | |
| 2.5 i | 7DA/1, 7DB/1/K, 7DE1, 7DH1, 7DC/2/3/A/G/M/T U, 7DJ/1/K, 7DL1, 7DM1, 7DK/2/T | E | 2460 | ACU,AET,AEU,APL,AVT | A | +/- | | 01/96 ▸ 06/03 | 7D0959455M | |
| 2.5 i | 7DB/K, 7DE1, 7DH1, 7DC/2/3/T, 7DK2, 7DM1 7DJ/1/K | E | 2460 | AET | A | +/- | | 08/96 ▸ 05/97 | 7D0959455J | |
| 2.5 i | 7DA/1, 7DB/1/K, 7DE1, 7DH1, 7DC/2/3/A/G/M/T U, 7DJ/1/K, 7DL1, 7DM1, 7DK/2/3/T/W | E | 2460 | ACU,AET,AEU,APL | A | + | | 01/96 ▸ 06/03 | 7D0959455K | |
| 2.5 i | 7DKT | E | 2460 | AEU | A | + | | 05/97 ▸ | 7D0959455G | |
| 2.5 i | 7DA/1, 7DB/1/K, 7DE1, 7DH1, 7DC/2/3/A/M/T/U 7DJ/1/K, 7DL1, 7DM1, 7DK/2/3/T/W | E | 2460 | ACU,AET,AEU,APL,AVT | A | - | | 01/96 ▸ 06/03 | 701959455AM | **696043** |
| 2.5 i | 7DA/1, 7DB/1/K, 7DE1, 7DH1, 7DC/2/3/A/G/M/T 7DJ/1/K, 7DL1, 7DM1, 7DK/2/3/T/W | E | 2460 | ACU,AET,AEU | A | - | | 01/96 ▸ | 701959455AE | **696043** |
| 2.5 i | 7DA/1, 7DB/1/K, 7DE1, 7DH1, 7DC/2/3/A/M/T/U 7DJ/1/K, 7DL1, 7DM1, 7DK/2/3/T/W | E | 2460 | ACU,AET,AVT | A | - | | 01/96 ▸ 06/03 | 7D0959455M | |
| 2.5 i | 7DA/1, 7DB/1/K, 7DE1, 7DH1, 7DC/2/3/A/G/M/T 7DJ/1/K, 7DL1, 7DM1, 7DK/2/3/T/W | E | 2460 | ACU,AET,AEU | A | - | | 01/96 ▸ | 701959455A | **696043** |
| 2.5 i | 7DA/1, 7DB/1/K, 7DE1, 7DH1, 7DC/2/3/A/G/M/T 7DJ/1/K, 7DL1, 7DM1, 7DK/2/3/T/W | E | 2460 | ACU,AET,AEU | A | - | | 01/96 ▸ | 7D0959455J | |
| 2.5 i | 7DA/1, 7DB/1/K, 7DE1, 7DH1, 7DC/2/M/T/U, 7DJ 1/K, 7DL1, 7DM1, 7DK/2/T | E | 2460 | AET,AEU,APL,AVT | A | - | | 05/97 ▸ 06/03 | 701959455J | **696179** |
| 2.8 i VR6 | 7DA/1, 7DB/1/K, 7DE1 7DH1, 7DC/2/3/A/G/M/T, 7DJ/1/K, 7DL1, 7DM1 7DK/2/3/M/T/W | E | 2792 | AES | M | +/- | | 01/96 ▸ | 7D0959455J | |
| 2.8 i VR6 | 7DA/1, 7DB/1/K, 7DE1 7DH1, 7DC/2/3/A/G/M/T, 7DJ/1/K, 7DL1, 7DM1 7DK/2/3/M/T/W | E | 2792 | AES | M | +/- | | 01/96 ▸ 06/03 | 701959455AM | **696043** |
| 2.8 i VR6 | 7DA/1, 7DB/1/K, 7DE1 7DH1, 7DC/2/3/A/G/M/T, 7DJ/1/K, 7DL1, 7DM1 7DK/2/3/M/T/W | E | 2792 | AES | M | +/- | | 01/96 ▸ 06/03 | 7D0959455M | |
| 2.8 i VR6 | 7DCU | E | 2792 | AES | M | - | | 08/98 ▸ 05/00 | 701959455AM | **696043** |
| 2.8 i VR6 | 7DCU | E | 2792 | AES | M | - | | 08/98 ▸ 05/00 | 7D0959455M | |
| 2.8 i V6 24V,2.8 i VR6 | 7DB1, 7DJ1 | E | 2792 | AES,AMV | A | +/- | | 01/96 ▸ | 7D0959455J | |
| 2.8 i V6 24V,2.8 i VR6 | 7DC3, 7DH1, 7DB/1 7DKT, 7DM1, 7DJ/1/K | E | 2792 | AES,AMV | A | +/- | | 01/96 ▸ 06/03 | 7D0959455M | |
| 2.8 i VR6 | 7DA/1, 7DB/1/K, 7DE1 7DH1, 7DC/2/3/A/G/M/T, 7DJ/1/K, 7DL1, 7DM1 7DK/2/3/M/T/W | E | 2792 | AES | A | +/- | | 01/96 ▸ | 7D0959455G | |
| 2.8 i VR6 | 7DJ1, 7DKT, 7DC/2 | E | 2792 | AES | A | +/- | | 01/96 ▸ 06/03 | 7D0959455K | |
| 2.8 i V6 24V,2.8 i VR6 | 7DA/1, 7DB/1/K, 7DE1 7DH1, 7DC/2/3/A/G/M/T, 7DJ/1/K, 7DL1, 7DM1 7DK/2/3/M/T/W | E | 2792 | AES,AMV | A | +/- | | 01/96 ▸ 06/03 | 701959455AM | **696043** |
| 2.8 i V6 24V,2.8 i VR6 | 7DA/1, 7DB/1/K, 7DE1 7DH1, 7DC/2/3/A/G/M/T/U, 7DJ/1/K, 7DL1 7DM1, 7DK/2/3/M/T/W | E | 2792 | AES,AMV | A | + | | 01/96 ▸ 06/03 | 7D0959455K | |
| 2.8 i V6 24V | 7DJ1 | E | 2792 | AMV | A | - | | 01/96 ▸ | 701959455AE | **696043** |
| 2.8 i V6 24V | 7DJ1 | E | 2792 | AMV | A | - | | 01/96 ▸ | 701959455A | **696043** |
| 2.8 i V6 24V | 7DJ1 | E | 2792 | AMV | A | - | | 01/96 ▸ | 701959455C | **696043** |
| 2.8 i VR6 | 7DBK, 7DA/1, 7DE1 7DH1, 7DC/2/3/A/G/M/T, 7DJ/1/K, 7DL1, 7DM1 7DK/2/3/M/T/W | E | 2792 | AES | A | - | | 01/96 ▸ | 7D0959455J | |
| 2.8 i VR6 | 7DBK, 7DA/1, 7DE1 7DJ1, 7DC/2/A/G/M/T/U, 7DL1, 7DK/2/3/M/W | E | 2792 | AES | A | - | | 01/96 ▸ 06/03 | 7D0959455M | |
| 2.8 i VR6 | 7DCU | E | 2792 | AES | A | - | | 08/98 ▸ 05/00 | 701959455AM | **696043** |
| 1.9 TD | 7DA/1, 7DB/1/K, 7DE1 7DH1, 7DC/2/3/A/G/M/T/U, 7DJ/1/K, 7DL1 7DM1, 7DK/2/3/M/T/W | D | 1896 | ABL | M | +/- | | 01/96 ▸ 06/03 | 7D0959455K | |
| 1.9 TD | 7DBK, 7DA/1, 7DH1 7DC/2/3/G/M, 7DM1, 7DK/2/3/T/W | D | 1896 | ABL | M | +/- | | 01/96 ▸ 06/03 | 7D0959455M | |
| 1.9 TD | 7DB1, 7DA/1, 7DH1 7DC/G/M/T, 7DK/3/M/T/W | D | 1896 | ABL | M | +/- | | 01/96 ▸ 06/03 | 701959455AM | **696043** |
| 1.9 TD | 7DA/1, 7DB/1/K, 7DE1 7DH1, 7DC/2/3/A/G/M/T, 7DJ/1/K, 7DL1, 7DM1 7DK/2/3/M/T/W | D | 1896 | ABL | M | - | | 01/96 ▸ | 701959455C | **696043** |
| 1.9 TD | 7DB/1, 7DE1, 7DH1 7DC/A/T/U, 7DKM, 7DL1, 7DJ/1/K | D | 1896 | ABL | M | - | | 01/96 ▸ 06/03 | 7D0959455M | |

Fan Motor + Blades Moteur + hélice Lüftermotor + Lüfterrad Motorino + Ventola Ventilatormotor Fan motoru + Kanatlar
Moto-ventilador + Aspas Мотор вентилятора + лопасти вентилятора Ventilátor motor és lapát Motor sahary + vrtule Ventilator motor + Lame Μοτέρ ανεμιστήρων + Πτερωτές



• **New** Nouveau **Nuevo** Novo **Nuovo** Nieuw **Neu** Nowość **Yeni** Новый Νέο **Novy**

## TRANSPORTER (F7D) (96>2003) (.../...)

| Type Ctr. | | CC | | | AC | | | OE | Valeo | |
|---|---|---|---|---|---|---|---|---|---|---|
| 1.9 TD | 7DA/1, 7DB/1/K, 7DE1 7DH1, 7DC/2/3/A/G/M/T/U, 7DJ/1/K, 7DL1 7DM1, 7DK/2/3/M/T/W | D | 1896 | ABL | M | - | | 01/96 ▸ 06/03 | 701959455J | **696179** |
| 1.9 TD | 7DA/1, 7DB/1/K, 7DE1 7DH1, 7DC/2/3/A/G/M/T, 7DJ/1/K, 7DL1, 7DM1 7DK/2/3/M/T/W | D | 1896 | ABL | M | - | | 01/96 ▸ | 7D0959455J | |
| 1.9 TD | 7DB/K, 7DE1, 7DH1 7DC/2/3/A/U, 7DK2, 7DL1, 7DM1, 7DJ/1/K | D | 1896 | ABL | M | - | | 01/96 ▸ 06/03 | 701959455AM | **696043** |
| 2.4 D | 7DB/1, 7DE1, 7DH1, 7DC/2/3/A/M/T/U, 7DJ/1/K 7DL1, 7DM1, 7DK/2/T | D | 2370 | AAB,AJA | M | +/- | | 01/96 ▸ 06/03 | 701959455AM | **696043** |
| 2.4 D | 7DA/1, 7DB/1/K, 7DE1, 7DH1, 7DC/2/3/A/G/M/T U, 7DJ/1/K, 7DL1, 7DM1, 7DK/2/3/T/W | D | 2370 | AAB | M | +/- | | 01/96 ▸ 06/03 | 7D0959455M | |
| 2.4 D | 7DA/1, 7DB/1/K, 7DE1, 7DH1, 7DC/2/3/A/G/M/T 7DJ/1/K, 7DL1, 7DM1, 7DK/2/3/T/W | D | 2370 | AAB | M | +/- | | 01/96 ▸ | 7D0959455J | |
| 2.4 D | 7DA/1, 7DB/1/K, 7DE1, 7DH1, 7DC/2/3/M/T/U 7DJ/1/K, 7DL1, 7DM1, 7DK/2/T | D | 2370 | AAB,AJA | M | +/- | | 05/96 ▸ 06/03 | 7D0959455K | |
| 2.4 D | 7DA/1, 7DB/1/K, 7DE1, 7DH1, 7DC/2/M/T/U, 7DJ 1/K, 7DL1, 7DM1, 7DK/2/T | D | 2370 | AAB,AJA | M | +/- | | 05/96 ▸ 06/03 | 701959455L | |
| 2.4 D | 7DA/1, 7DB/1/K, 7DE1, 7DC/2/M/T, 7DJ/1/K 7DL1, 7DK/2/T | D | 2370 | AJA | M | +/- | | 05/97 ▸ | 7D0959455G | |
| 2.4 D | 7DA/1, 7DB/1/K, 7DE1, 7DH1, 7DC/2/3/A/G/M/T 7DJ/1/K, 7DL1, 7DM1, 7DK/2/3/T/W | D | 2370 | AAB,AJA | M | + | | 01/96 ▸ 06/03 | 7D0959455K | |
| 2.4 D | 7DA/1, 7DB/1/K, 7DE1, 7DH1, 7DC/2/3/G/M/T 7DJ/1/K, 7DL1, 7DK/2/3/T/W | D | 2370 | AAB,AJA | M | - | | 01/96 ▸ 06/03 | 701959455AM | **696043** |
| 2.4 D | 7DA/1, 7DB/1/K, 7DE1, 7DH1, 7DC/2/3/A/G/M/T 7DJ/1/K, 7DL1, 7DM1, 7DK/2/3/T/W | D | 2370 | AAB,AJA | M | - | | 01/96 ▸ | 701959455C | **696043** |
| 2.4 D | 7DA/1, 7DB/1/K, 7DE1, 7DH1, 7DC/2/3/A/G/M/T 7DJ/1/K, 7DL1, 7DM1, 7DK/2/3/T/W | D | 2370 | AAB | M | - | | 01/96 ▸ 06/03 | 701959455L | |
| 2.4 D | 7DA/1, 7DB/1/K, 7DE1, 7DH1, 7DC/2/3/A/G/M/T U, 7DJ/1/K, 7DL1, 7DM1, 7DK/2/3/T/W | D | 2370 | AAB,AJA | M | - | | 01/96 ▸ 06/03 | 701959455J | **696179** |
| 2.4 D | 7DA/1, 7DB/1/K, 7DE1, 7DH1, 7DC/2/3/M/T/U 7DJ/1/K, 7DL1, 7DM1, 7DK/2/T | D | 2370 | AAB,AJA | M | - | | 05/96 ▸ 06/03 | 7D0959455M | |
| 2.4 D | 7DA/1, 7DB/1/K, 7DE1, 7DH1, 7DC/3/M/T, 7DJ/1 K, 7DL1, 7DM1, 7DK/2/T | D | 2370 | AAB | M | - | | 05/96 ▸ 05/97 | 701959455AE | **696043** |
| 2.4 D | 7DA/1, 7DB/1/K, 7DE1, 7DH1, 7DC/2/3/M/T, 7DJ 1/K, 7DL1, 7DM1, 7DK/2/T | D | 2370 | AAB,AJA | M | - | | 05/96 ▸ | 7D0959455J | |
| 2.4 D | 7DH1 | D | 2370 | AJA | M | - | | 05/97 ▸ | 7D0959455G | |
| 2.4 D | 7DA/1, 7DB/1/K, 7DE1, 7DH1, 7DC/2/3/A/M/T/U 7DJ/1/K, 7DL1, 7DM1, 7DK/2/T/W | D | 2370 | AAB,AJA | A | +/- | | 01/96 ▸ 04/99 | 701959455AM | **696043** |
| 2.4 D | 7DA/1, 7DB/1/K, 7DH1, 7DC/2/3/A/G/M/T, 7DJ/1 K, 7DL1, 7DM1, 7DK/2/3/W | D | 2370 | AAB | A | +/- | | 01/96 ▸ 04/96 | 7D0959455J | |
| 2.4 D | 7DA/1, 7DB/1/K, 7DE1, 7DH1, 7DC/2/3/A/G/M/T U, 7DJ/1/K, 7DL1, 7DM1, 7DK/2/3/T/W | D | 2370 | AAB | A | +/- | | 01/96 ▸ 09/98 | 7D0959455M | |
| 2.4 D | 7DA/1, 7DB/1/K, 7DE1, 7DH1, 7DC/2/3/M/T/U 7DJ/1/K, 7DL1, 7DM1, 7DK/2/T | D | 2370 | AAB,AJA | A | +/- | | 05/96 ▸ 04/99 | 7D0959455K | |
| 2.4 D | 7DA/1, 7DB/1/K, 7DE1, 7DH1, 7DC/2/3/M/T/U 7DJ/1/K, 7DL1, 7DM1, 7DK/2/T | D | 2370 | AAB,AJA | A | +/- | | 05/96 ▸ 06/03 | 701959455L | |
| 2.4 D | 7DA/1, 7DB/1/K, 7DE1, 7DH1, 7DC/2/3/A/G/M/T 7DJ/1/K, 7DL1, 7DM1, 7DK/2/3/T/W | D | 2370 | AAB,AJA | A | + | | 01/96 ▸ 06/03 | 7D0959455K | |
| 2.4 D | 7DA/1, 7DB/1/K, 7DH1, 7DC/2/3/A/G/M/T, 7DJ/1 K, 7DL1, 7DM1, 7DK/2/3/W | D | 2370 | AAB | A | - | | 01/96 ▸ 04/96 | 701959455L | |
| 2.4 D | 7DA/1, 7DB/1/K, 7DE1, 7DH1, 7DC/2/3/G/M, 7DJ 1/K, 7DL1, 7DM1, 7DK/2/3/T | D | 2370 | AAB,AJA | A | - | | 01/96 ▸ 06/03 | 701959455AM | **696043** |
| 2.4 D | 7DA/1, 7DB/1/K, 7DE1, 7DH1, 7DC/2/3/A/G/M/T 7DJ/1/K, 7DL1, 7DM1, 7DK/2/3/T/W | D | 2370 | AAB,AJA | A | - | | 01/96 ▸ | 701959455C | **696043** |
| 2.4 D | 7DA/1, 7DB/1/K, 7DE1, 7DH1, 7DC/2/3/A/G/M/T U, 7DJ/1/K, 7DL1, 7DM1, 7DK/2/3/T/W | D | 2370 | AAB,AJA | A | - | | 01/96 ▸ 06/03 | 701959455J | **696179** |
| 2.4 D | 7DB/1/K, 7DE1, 7DC/2/M, 7DJ/1/K, 7DL1, 7DK/2 T | D | 2370 | AJA | A | - | | 05/97 ▸ | 7D0959455J | |
| 2.4 D | 7DA/1, 7DB/1/K, 7DE1, 7DH1, 7DC/2/M/T/U, 7DJ 1/K, 7DL1, 7DM1, 7DK/2/T | D | 2370 | AJA | A | - | | 05/97 ▸ 06/03 | 7D0959455M | |
| 2.5 TDi | 7DA/1, 7DB/1/K, 7DE1 7DH1, 7DC/1/2/3/A/G/M/T/U, 7DJ/1/K, 7DL1 7DM1, 7DK/2/3/T/W | D | 2460 | ACV,AXL | M | +/- | | 01/96 ▸ 06/03 | 7D0959455M | |
| 2.5 TDi | 7DA/1, 7DB/1/K, 7DE1 7DH1, 7DC/2/A/M/T/U, 7DJ/1/K, 7DL1, 7DM1 7DK/2/3/T | D | 2460 | ACV,AXL,AYC | M | +/- | | 01/96 ▸ 06/03 | 701959455AM | **696043** |
| 2.5 TDi | 7DA/1, 7DB/1/K, 7DE1 7DH1, 7DC/1/2/3/A/G/M/T, 7DJ/1/K, 7DL1 7DM1, 7DK/2/3/T/W | D | 2460 | ACV | M | +/- | | 01/96 ▸ | 7D0959455J | |

# VOLKSWAGEN (.../...)

## TRANSPORTER (F7D) (96>2003) (.../...)

| | | | | | | | | | | | |
|---|---|---|---|---|---|---|---|---|---|---|---|
| 2.5 TDi | 7DH1, 7DJ1, 7DK2 7DC/2 | D | 2460 | AXL | M | +/- | | 06/97 ▸ 06/03 | 701959455J | **696179** | |
| 2.5 TDi | 7DB1, 7DA/1, 7DE1 7DH1, 7DJ1, 7DK2, 7DL1, 7DM1, 7DC/2/M/T/U | D | 2460 | AXL | M | +/- | | 06/97 ▸ 06/03 | 7D0959455K | | |
| 2.5 TDi | 7DB1, 7DA/1, 7DE1 7DL1, 7DM1, 7DC/M/T/U | D | 2460 | AXL | M | + | | 06/97 ▸ 06/03 | 701959455J | **696179** | |
| 2.5 TDi | 7DA/1, 7DE1, 7DH1 7DJ1, 7DC/2/M/T/U, 7DL1, 7DM1, 7DK/2/T | D | 2460 | AHY,AYC | M | + | | 05/98 ▸ 06/03 | 7D0959455K | | |
| 2.5 TDi | 7DA/1, 7DB/1/K, 7DE1 7DH1, 7DC/1/2/3/A/G/M/T, 7DJ/1/K, 7DL1 7DM1, 7DK/2/3/T/W | D | 2460 | ACV | M | - | | 01/96 ▸ | 701959455A | **696043** | |
| 2.5 TDi | 7DA/1, 7DE1, 7DH1 7DC/1/2/3/A/G/M/T/U, 7DJ/1/K, 7DM1, 7DK/2/T W | D | 2460 | ACV,AHY | M | - | | 01/96 ▸ 06/03 | 701959455AM | **696043** | |
| 2.5 TDi | 7DA/1, 7DB/1/K, 7DE1 7DH1, 7DC/1/2/3/A/G/M/T, 7DJ/1/K, 7DL1 7DM1, 7DK/2/3/T/W | D | 2460 | ACV | M | - | | 01/96 ▸ | 701959455AE | **696043** | |
| 2.5 TDi | 7DA/1, 7DB/1/K, 7DE1 7DH1, 7DC/1/2/3/A/G/M/T, 7DJ/1/K, 7DL1 7DM1, 7DK/2/3/T/W | D | 2460 | ACV | M | - | | 01/96 ▸ | 701959455C | **696043** | |
| 2.5 TDi | 7DA/1, 7DE1, 7DH1 7DJ1, 7DC/2/M/T/U, 7DL1, 7DM1, 7DK/2/T | D | 2460 | AHY,AYC | M | - | | 05/98 ▸ 06/03 | 7D0959455M | | |
| 2.5 DTi,2.5 TDi | 7DA/1, 7DB/1/K, 7DE1 7DH1, 7DC/2/M/T/U, 7DJ/1/K, 7DL1, 7DM1, 7DK 2/T | D | 2460 | ACV,AXL | A | +/- | | 01/96 ▸ 06/03 | 7D0959455M | | |
| 2.5 TDi | 7DK2, 7DL1, 7DJ/1 | D | 2460 | ACV,AXL | A | +/- | | 01/96 ▸ | 7D0959455J | | |
| 2.5 DTi,2.5 TDi | 7DB1, 7DA/1, 7DE1 7DH1, 7DJ1, 7DC/2/M/T/U, 7DL1, 7DM1, 7DK/2 T | D | 2460 | ACV,AXL,AYC | A | +/- | | 08/96 ▸ 06/03 | 701959455AM | **696043** | |
| 2.5 DTi,2.5 TDi | 7DCM, 7DE1, 7DJ1 7DB/1, 7DL1, 7DM1, 7DK/2/T | D | 2460 | ACV,AXL | A | +/- | | 08/96 ▸ 06/03 | 701959455J | **696179** | |
| 2.5 TDi | 7DB1, 7DA/1, 7DE1 7DH1, 7DJ1, 7DK2, 7DL1, 7DM1, 7DC/2/M/T/U | D | 2460 | AXL | A | +/- | | 06/97 ▸ 06/03 | 7D0959455K | | |
| 2.5 TDi | 7DB1, 7DA/1, 7DH1 7DJ1, 7DL1, 7DM1, 7DC/2/M/T/U | D | 2460 | AXL | A | + | | 06/97 ▸ 06/03 | 701959455J | **696179** | |
| 2.5 TDi | 7DA/1, 7DB/1/K, 7DE1 7DH1, 7DC/2/M/T/U, 7DJ/1/K, 7DL1, 7DM1, 7DK 2/T | D | 2460 | AUF | A | + | | 11/99 ▸ 06/03 | 7D0959455M | | |
| 2.5 TDi | 7DA/1, 7DB/1/K, 7DE1 7DH1, 7DC/2/M/T/U, 7DJ/1/K, 7DL1, 7DM1, 7DK 2/T | D | 2460 | AUF,AYC | A | + | | 11/99 ▸ 06/03 | 7D0959455K | | |
| 2.5 TDi | 7DJ1 | D | 2460 | ACV | A | - | | 01/96 ▸ | 701959455A | **696043** | |
| 2.5 TDi | 7DJ1 | D | 2460 | ACV | A | - | | 01/96 ▸ | 701959455C | **696043** | |
| 2.5 TDi | 7DK2, 7DL1, 7DJ/1 | D | 2460 | ACV,AXL | A | - | | 01/96 ▸ | 701959455AE | **696043** | |
| 2.5 TDi | 7DJ1, 7DK2 | D | 2460 | ACV,AXL | A | - | | 08/96 ▸ 11/99 | 701959455AM | **696043** | |
| 2.5 TDi | 7DJ1 | D | 2460 | AYC | A | - | | 04/01 ▸ 04/02 | 7D0959455M | | |
| 2.5 TDi | 7DA/1, 7DB/1/K, 7DE1 7DH1, 7DC/2/M/T/U, 7DJ/1/K, 7DL1, 7DM1, 7DK 2/T | D | 2461 | AJT | M | +/- | | 05/98 ▸ 06/03 | 7D0959455M | | |
| 2.5 TDi | 7DB1, 7DA/1, 7DE1 7DH1, 7DJ1, 7DC/2/M/T/U, 7DL1, 7DM1, 7DK/2 T | D | 2461 | AYY | M | +/- | | 10/01 ▸ 06/03 | 701959455AM | **696043** | |
| 2.5 TDi | 7DB1, 7DA/1, 7DH1 7DJ1, 7DC/2/M/T/U, 7DK/2/T | D | 2461 | AXG | M | + | | 09/00 ▸ 06/03 | 7D0959455K | | |
| 2.5 TDi | 7DL1 | D | 2461 | AJT | M | - | | 05/97 ▸ | 7D0959455J | | |
| 2.5 TDi | 7DL1 | D | 2461 | AJT | M | - | | 05/97 ▸ | 701959455C | **696043** | |
| 2.5 TDi | 7DA/1, 7DB/1/K, 7DE1 7DH1, 7DC/2/M/T/U, 7DJ/1/K, 7DL1, 7DM1, 7DK 2/T | D | 2461 | AJT,AXG | M | - | | 05/98 ▸ 06/03 | 701959455AM | **696043** | |
| 2.5 TDi | 7DB1, 7DA/1, 7DE1 7DH1, 7DJ1, 7DC/2/M/T/U, 7DL1, 7DM1, 7DK/2 T | D | 2461 | AXG,AYY | M | - | | 09/00 ▸ 06/03 | 7D0959455M | | |

# VOLVO

## 740-760-780

| | | | | | | | | | | | |
|---|---|---|---|---|---|---|---|---|---|---|---|
| 2.0,2.0 16V,2.0 Turbo<br>2.0 Turbo 16V<br>2.0 Turbo Intercooler | 745243, 745282<br>745233, 744243<br>744262, 745252<br>744293, 745262, 745273, 744282, 744273<br>744252, 745203, 745293, 744233 | E | 1986 | B200E,B200ET,B200F,B200FT<br>B200G,B200K,B204E,B204FT<br>B204GT | M | | | 07/87 ▸ 08/92 | 13789169 | | |

Fan Motor + Blades Moteur + hélice Lüftermotor + Lüfterrad Motorino + Ventola Ventilatormotor Fan motoru + Kanatlar
Moto-ventilador + Aspas Мотор вентилятора + лопасти вентилятора Ventilátor motor és lapát Motor sahary + vrtule Ventilator motor + Lame Μοτέρ ανεμιστήρων + Πτερωτές



• **New** Nouveau **Nuevo** Novo **Nuovo** Nieuw **Neu** Nowość **Yeni** Новый Νέο **Novy**

| Type Ctr. | | CC | | AC | | | OE | Valeo | |
|---|---|---|---|---|---|---|---|---|---|
| **VOLVO (.../...)** | | | | | | | | | |
| **740-760-780 (.../...)** | | | | | | | | | |
| 2.0 744237, 744277, 745237, 745277, 745247 744247 | E | 1986 | B200E,B200F,B200K | A | | | 07/87 ▸ 07/91 | 13789169 | |
| 2.3,2.3 16V,2.3 Turbo 745872, 745833<br>2.3 Turbo Intercooler 744872, 745842<br>745883, 745822, 744833, 744883, 744862<br>745892, 745802, 744802, 744853, 745862<br>745853, 744842 | E | 2316 | B230E,B230ET,B230F,B230FB<br>B230FT,B230FTX,B230G,B230GT<br>B230K,B234F | M | | | 07/87 ▸ 08/92 | 13789169 | |
| 2.3 744886, 745845, 745886, 744845, 745855 744855 | E | 2316 | B230E,B230F,B230FB | A | | | 07/87 ▸ 08/92 | 13789169 | |
| 2.4 D,2.4 TD 744762, 745773 744752, 745752, 745762, 744773 | D | 2383 | D24,D24T,D24TIC | M | | | 07/87 ▸ 08/92 | 13789169 | |
| 2.4 TD 744765, 744755 745755, 745765 | D | 2383 | D24T,D24TIC | A | | | 07/87 ▸ 08/92 | 13789169 | |
| **940-960** | | | | | | | | | |
| 2.0 16V,2.0 Turbo 16V 945292, 945252 944292 | E | 1986 | B204E,B204FT | M | +/- | | 09/90 ▸ 1992 | 13789169 | |
| 2.0 Turbo 16V 964252 | E | 1986 | B204FT | M | +/- | | 09/90 ▸ 1994 | 13789169 | |

# CITROEN

## XANTIA (97>2002)

| | | | CC | | AC | | | OE | Valeo |
|---|---|---|---|---|---|---|---|---|---|
| 1.8 i GPL 16V | X1LFYC, X2LFYC | F | 1761 | XU7JP4-G | M | + | 12/97 ▸ 05/02 | 95668984 | **698312** |
| 1.8 i GPL 16V | X1LFYC, X2LFYC | F | 1761 | XU7JP4-G | M | - | 12/97 ▸ 05/02 | 125331 | **698304** |
| 1.6 i | X1BFZF | E | 1580 | XU5JP | M | + | 12/97 ▸ 05/02 | 95668984 | **698312** |
| 1.6 i | X1BFZF | E | 1580 | XU5JP | M | - | 12/97 ▸ 05/02 | 125331 | **698304** |
| 1.8 i | X2LFXF, X1L/6AG/FXF | E | 1761 | XU7JB,XU7JP | M | + | 12/97 ▸ 05/02 | 125333 | **698305** |
| 1.8 i 16V | X1L/FYB/FYC/FYF, X2L FYB/FYC/FYF | E | 1761 | XU7JP4 | M | + | 12/97 ▸ 05/02 | 95668984 | **698312** |
| 1.8 i,1.8 i 16V | X1L/FXF/FYB/FYC/FYF X2L/FXF/FYB/FYC/FYF | E | 1761 | XU7JB,XU7JP4 | M | - | 12/97 ▸ 05/02 | 125331 | **698304** |
| 1.8 i 16V | X1LFYM | E | 1761 | XU7JP4 | A | +/- | 12/97 ▸ 05/02 | 125333 | **698305** |
| 2.0 i 16V,2.0 i Turbo CT | X1R/FVF/FVG/GXF, X2R FVF/GXF, X7R/FVF/GXF | E | 1998 | XU10J2TE,XU10J4R | M | + | 12/97 ▸ 05/02 | 95668984 | **698312** |
| 2.0 i Turbo CT | X2RGXF, X7RGXF, X1R GXF | E | 1998 | XU10J2TE | M | + | 12/97 ▸ 05/02 | 95668985 | **698343** |
| 2.0 i 16V | X2RFVF, X7RFVF, X1R FVF/FVG | E | 1998 | XU10J4R | M | - | 12/97 ▸ 05/02 | 125331 | **698304** |
| 2.0 i | X1RFXM, X2RFXM | E | 1998 | XU10J2C | A | + | 12/97 ▸ 05/02 | 95668985 | **698343** |
| 2.0 i 16V | X1RFVU, X2RFVM | E | 1998 | XU10J4R | A | + | 12/97 ▸ 05/02 | 95668984 | **698312** |
| 2.0 i | X1RFXM, X2RFXM | E | 1998 | XU10J2C | A | - | 12/97 ▸ 05/02 | 95668984 | **698312** |
| 2.0 i 16V | X1RFVU, X2RFVM | E | 1998 | XU10J4R | A | - | 12/97 ▸ 05/02 | 125333 | **698305** |
| 3.0 i V6 24V | X2XFZF, X7XFZF | E | 2946 | ES9J4 | M | +/- | 12/97 ▸ 05/02 | 125333 | **698305** |
| 3.0 i V6 24V | X2XFZF, X7XFZF | E | 2946 | ES9J4 | M | + | 12/97 ▸ 05/02 | 95668984 | **698312** |
| 3.0 i V6 24V | X1XFZM, X2XFZM | E | 2946 | ES9J4 | A | +/- | 12/97 ▸ 05/02 | 125333 | **698305** |
| 3.0 i V6 24V | X1XFZM, X2XFZM | E | 2946 | ES9J4 | A | + | 12/97 ▸ 05/02 | 95668984 | **698312** |
| 1.9 TD | X1DHXF, X2DHXF | D | 1905 | XUD9BTF | M | +/- | 12/97 ▸ 05/02 | 95668984 | **698312** |
| 1.9 SD | X1DHWF, X2DHWF | D | 1905 | XUD9SD | M | + | 12/97 ▸ 05/02 | 125333 | **698305** |
| 1.9 TD | X1DHXM, X2DHXM | D | 1905 | XUD9BTF | A | + | 12/97 ▸ 05/02 | 95668985 | **698343** |
| 2.0 HDi | X1R/HYF/HZB/HZF X7RHZF, X2R/HYE/HYF/HZF | D | 1997 | DW10ATED,DW10TD | M | +/- | 10/98 ▸ 05/02 | 95668984 | **698312** |
| 2.0 HDi | X1R/HYF, X2R/HYE/HYF | D | 1997 | DW10TD | M | +/- | 05/99 ▸ 05/02 | 125333 | **698305** |
| 2.1 TD 12V | X2P8CF, X7P8CF, X1P 8CF | D | 2088 | XUD11BTE | M | + | 12/97 ▸ 05/02 | 95668985 | **698343** |
| 2.1 TD 12V | X2P8CF, X7P8CF, X1P 8CF | D | 2088 | XUD11BTE | M | - | 12/97 ▸ 05/02 | 95668984 | **698312** |

## XM (89>94)

| | | | | | | | | | |
|---|---|---|---|---|---|---|---|---|---|
| 2.0,2.0 i | Y3A/A/B/C/H/J/P/R/Z | E | 1998 | XU102C,XU10J2,XU10M | M | +/- | 05/89 ▸ 06/94 | 125315 | **698301** |
| 2.0 i Turbo CT | Y3AX | E | 1998 | XU10J2TE | M | +/- | 09/92 ▸ 06/94 | 125331 | **698304** |
| 2.0 i Turbo CT | Y3AY | E | 1998 | XU10J2TE | M | - | 09/92 ▸ 06/94 | 125331 | **698304** |
| 2.0 i | Y3A/CA/HA/RA | E | 1998 | XU10J2 | A | +/- | 01/90 ▸ 06/94 | 125315 | **698301** |
| 2.0 i Turbo CT | Y3AXA | E | 1998 | XU10J2TE | A | +/- | 07/92 ▸ 06/94 | 125331 | **698304** |
| 2.0 i Turbo CT | Y3AYA | E | 1998 | XU10J2TE | A | - | 03/93 ▸ 06/94 | 125331 | **698304** |
| 3.0 i V6,3.0 i V6 24V | Y3C/M/N/U | E | 2963 | ZPJ,ZPJ4 | M | +/- | 05/93 ▸ 06/94 | 125315 | **698301** |
| 3.0 i V6 | Y3CNA | E | 2963 | ZPJ | A | +/- | 07/93 ▸ 06/94 | 125315 | **698301** |
| 3.0 i V6,3.0 i V6 24V | Y3A/D/G/L/W | E | 2975 | ZPJ,ZPJ4 | M | +/- | 05/89 ▸ 06/94 | 125315 | **698301** |
| 3.0 i V6 | Y3A/GA/WA | E | 2975 | ZPJ | A | +/- | 05/90 ▸ 06/94 | 125315 | **698301** |
| 2.1 D D12 | Y3A/E/S | D | 2138 | XUD11A | M | +/- | 09/89 ▸ 06/94 | 125315 | **698301** |

## ZX

| | | | | | | | | | |
|---|---|---|---|---|---|---|---|---|---|
| 1.1,1.1 i | N2A/1/3/4, N2L/2/2/T 3 | E | 1124 | TU1,TU1M,TU1M+ | M | +/- | 03/91 ▸ 07/98 | 125333 | **698305** |
| 1.1 i | N2A4 | E | 1124 | TU1M | M | +/- | 09/92 ▸ 06/97 | 125333 | **698305** |
| 1.1 i | N2A/3/4/4/T, N2L/2/2/T/3 | E | 1124 | TU1M,TU1M+ | M | +/- | 09/92 ▸ 07/98 | 125331 | **698304** |
| 1.1,1.1 i | N2C9, N2A/1/3/4/4/T N2L/2/2/T/3 | E | 1124 | TU1,TU1M,TU1M+ | M | + | 03/91 ▸ 07/98 | 125329 | **698303** |
| 1.1,1.1 i | N2A4/T, N2C9 | E | 1124 | TU1,TU1M | M | - | 09/92 ▸ 05/93 | 125333 | **698305** |
| 1.4,1.4 i | N2B1, N2D7, N2E9 N2A/7/9, N2M1, N2L/7/9 | E | 1360 | TU3.2,TU3JP,TU3M,TU3MC | M | +/- | 03/91 ▸ 07/98 | 125333 | **698305** |
| 1.4,1.4 i | N2B1, N2A/7/9, N2E/1 T/9, N2M1, N2L/7/9 | E | 1360 | TU3.2,TU3JP,TU3M,TU3MC | M | +/- | 03/91 ▸ 07/98 | 125331 | **698304** |
| 1.4,1.4 i | N2A7, N2B1 | E | 1360 | TU3.2,TU3MC | M | +/- | 03/91 ▸ 06/97 | 125333 | **698305** |
| 1.4,1.4 i | N2B1, N2A/7/9 | E | 1360 | TU3.2,TU3M,TU3MC | M | + | 03/91 ▸ 06/97 | 125329 | **698303** |
| 1.4,1.4 i | N2B1, N2E1/T | E | 1360 | TU3.2,TU3MC | M | - | 09/92 ▸ 05/93 | 125333 | **698305** |
| 1.4 i | N2D7, N2M1 | E | 1360 | TU3JP,TU3MC | M | - | 02/94 ▸ 07/98 | 125329 | **698303** |
| 1.6 i | N2B/2/4/5, N2G/1/2 | E | 1580 | XU5JP,XU5M,XU5M2 | M | +/- | 03/91 ▸ 07/98 | 125331 | **698304** |
| 1.6 i | N2B4 | E | 1580 | XU5M | M | +/- | 03/91 ▸ 08/93 | 125333 | **698305** |
| 1.6 i | N2B/4, N2G/1/2 | E | 1580 | XU5JP,XU5M | M | +/- | 03/91 ▸ 07/98 | 125333 | **698305** |
| 1.6 i | N2G1, N2B/2/4/5 | E | 1580 | XU5JP,XU5M,XU5M2 | M | + | 03/91 ▸ 06/97 | 125329 | **698303** |
| 1.6 i | N2G1, N2B/2/5 | E | 1580 | XU5JP,XU5M,XU5M2 | M | - | 03/91 ▸ 05/93 | 125333 | **698305** |
| 1.6 i | N2B5 | E | 1580 | XU5M | M | - | 09/92 ▸ 05/93 | 125333 | **698305** |

Fan Motor Moteur de ventilateur Lüftermotor Motoventole Ventilatormotor Fan motoru
Motor del ventilador Motor вентилятора Ventilátor motor Motor sahary Ventilator motor Motér ανεμιστήρων



• **New** Nouveau **Nuevo** Novo **Nuovo** Nieuw **Neu** Nowość **Yeni** Новый Νέο **Novy**

| | | | CC | | | AC | | | OE | Valeo | |
|---|---|---|---|---|---|---|---|---|---|---|---|
| **CITROEN (.../...)** | | | | | | | | | | | |
| **ZX (.../...)** | | | | | | | | | | | |
| 1.6 i | N2G2 | E | 1580 | XU5JP | M | - | | 02/94 ▸ 07/98 | 125329 | **698303** | |
| 1.6 i | N2B4A, N2G1A | E | 1580 | XU5JP,XU5M | A | +/- | | 09/92 ▸ 06/97 | 125331 | **698304** | |
| 1.6 i | N2B4A, N2G1A | E | 1580 | XU5JP,XU5M | A | + | | 09/92 ▸ 06/97 | 125329 | **698303** | |
| 1.6 i | N2B4A, N2G1A | E | 1580 | XU5JP,XU5M | A | - | | 09/92 ▸ 05/93 | 125333 | **698305** | |
| 1.6 i | N2B4A | E | 1580 | XU5M | A | - | | 09/92 ▸ 05/93 | 125333 | **698305** | |
| 1.8 i,1.8 i 16V | N2F2, N2E/3/4, N2K/5 7/9 | E | 1761 | XU7JP,XU7JP4 | M | +/- | | 09/92 ▸ 07/98 | 125331 | **698304** | |
| 1.8 i,1.8 i 16V | N2F2, N2K7, N2E/4 | E | 1761 | XU7JP,XU7JP4 | M | +/- | | 07/95 ▸ 07/98 | 125333 | **698305** | |
| 1.8 i,1.8 i 16V | N2F2, N2E/4, N2K/5/7 9 | E | 1761 | XU7JP,XU7JP4 | M | +/- | | 07/95 ▸ 07/98 | 125333 | **698305** | |
| 1.8 i,1.8 i 16V | N2E/3/4, N2K/5/7 | E | 1761 | XU7JP,XU7JP4 | M | + | | 09/92 ▸ 07/98 | 125329 | **698303** | |
| 1.8 i | N2E/3/4 | E | 1761 | XU7JP | M | - | | 09/92 ▸ 05/93 | 125333 | **698305** | |
| 1.8 i,1.8 i 16V | N2F2, N2K9 | E | 1761 | XU7JP,XU7JP4 | M | - | | 07/95 ▸ 07/98 | 125329 | **698303** | |
| 1.8 i | N2E4A | E | 1761 | XU7JP | A | +/- | | 09/92 ▸ 06/97 | 125333 | **698305** | |
| 1.8 i | N2H4, N2E/3A/4A | E | 1761 | XU7JP | A | +/- | | 09/92 ▸ 07/98 | 125331 | **698304** | |
| 1.8 i | N2H4, N2E/3A/4A | E | 1761 | XU7JP | A | +/- | | 09/92 ▸ 07/98 | 125333 | **698305** | |
| 1.8 i | N2E/3A/4A | E | 1761 | XU7JP | A | + | | 09/92 ▸ 07/98 | 125329 | **698303** | |
| 1.8 i | N2H4 | E | 1761 | XU7JP | A | - | | 07/95 ▸ 07/98 | 125329 | **698303** | |
| 1.9 i | N2B/6/8 | E | 1905 | XU9JA | M | +/- | | 03/91 ▸ 08/92 | 125331 | **698304** | |
| 1.9 i | N2B/6/8 | E | 1905 | XU9JA | M | +/- | | 03/91 ▸ 08/92 | 125333 | **698305** | |
| 1.9 i | N2B/6/8 | E | 1905 | XU9JA | M | + | | 03/91 ▸ 08/92 | 125329 | **698303** | |
| 1.9 i | N2B8A | E | 1905 | XU9JA | A | +/- | | 09/92 ▸ 08/93 | 125333 | **698305** | |
| 1.9 i | N2B8A | E | 1905 | XU9JA | A | +/- | | 09/92 ▸ 08/93 | 125333 | **698305** | |
| 1.9 i | N2B8A | E | 1905 | XU9JA | A | +/- | | 09/92 ▸ 08/93 | 125331 | **698304** | |
| 1.9 i | N2B8A | E | 1905 | XU9JA | A | + | | 09/92 ▸ 08/93 | 125329 | **698303** | |
| 2.0 i,2.0 i 16V | N2F1, N2J9, N2L1 N2E/8 | E | 1998 | XU10J2C,XU10J4,XU10J4RS | M | +/- | | 09/92 ▸ 07/98 | 125333 | **698305** | |
| 2.0 i,2.0 i 16V | N2F1, N2J9, N2L1 N2E/6/7 | E | 1998 | XU10J2C,XU10J4,XU10J4RS | M | +/- | | 09/92 ▸ 07/98 | 125331 | **698304** | |
| 2.0 i,2.0 i 16V | N2F1, N2J9, N2L1 N2E/6/7 | E | 1998 | XU10J2C,XU10J4,XU10J4RS | M | + | | 09/92 ▸ 07/98 | 125329 | **698303** | |
| 2.0 i | N2E/6/7 | E | 1998 | XU10J2C | M | - | | 09/92 ▸ 05/93 | 125333 | **698305** | |
| 2.0 i | N2J3 | E | 1998 | XU10J2C | A | +/- | | 09/92 ▸ 07/98 | 125333 | **698305** | |
| 2.0 i | N2J3 | E | 1998 | XU10J2C | A | +/- | | 09/92 ▸ 07/98 | 125331 | **698304** | |
| 2.0 i | N2J3 | E | 1998 | XU10J2C | A | + | | 09/92 ▸ 07/98 | 125329 | **698303** | |
| 1.4 D | N2H6 | D | 1360 | TUD3 | M | +/- | | 07/94 ▸ 04/95 | 125333 | **698305** | |
| 1.4 D | N2H6 | D | 1360 | TUD3 | M | +/- | | 07/94 ▸ 04/95 | 125333 | **698305** | |
| 1.5 D | N2M3 | D | 1527 | TUD5 | M | +/- | | 07/94 ▸ 07/98 | 125333 | **698305** | |
| 1.5 D | N2M3 | D | 1527 | TUD5 | M | +/- | | 07/94 ▸ 07/98 | 125333 | **698305** | |
| 1.8 D | N2C2/T | D | 1769 | XUD7 | M | +/- | | 09/92 ▸ 07/98 | 125333 | **698305** | |
| 1.8 D | N2C2/T | D | 1769 | XUD7 | M | + | | 09/92 ▸ 07/98 | 125329 | **698303** | |
| 1.9 TD | N2D9, N2F5, N2C/8 | D | 1905 | XUD9TE | M | +/- | | 09/92 ▸ 07/98 | 125329 | **698303** | |
| 1.9 D,1.9 TD | N2D8, N2E9, N2C/3/4 4/T/6/7, N2F/4/5 | D | 1905 | XUD9,XUD9A,XUD9TE | M | + | | 07/92 ▸ 07/98 | 125329 | **698303** | |
| 1.9 D | N2D8, N2E9, N2C/3/4/4/T/6, N2H/8/8/T/9 | D | 1905 | XUD9,XUD9A | M | - | | 09/92 ▸ 07/98 | 125333 | **698305** | |
| 1.9 D | N2H5, N2C/3A, N2L/5/6 | D | 1905 | XUD9A | A | +/- | | 09/92 ▸ 07/98 | 125333 | **698305** | |
| 1.9 D | N2C3A | D | 1905 | XUD9A | A | + | | 09/92 ▸ 07/98 | 125329 | **698303** | |
| **CITROEN** | | | | | | | | | | | |
| **C15** | | | | | | | | | | | |
| 1.0 | VDPL, VDSD | E | 954 | TU9,XV8 | M | - | | 11/86 ▸ 06/95 | 95593547 | **698342** | |
| 1.1 | VDP/S/T | E | 1118 | E1A | M | - | | 07/87 ▸ 07/88 | 95593547 | **698342** | |
| 1.1,1.1 i | VDP/A/F/X/Y/Z, VDVN VDS/C/E/F/V/Z | E | 1124 | TU1,TU1M,XW7B1 | M | - | | 10/84 ▸ 02/01 | 95593547 | **698342** | |
| 1.3 | VDP/U/V/W | E | 1294 | G1A | M | - | | 07/87 ▸ 07/88 | 95593547 | **698342** | |
| 1.4,1.4 i | VDP/K/M, VDS/A/B/C/G J | E | 1360 | TU3.2,TU3A,TU3M,TU3TR,XY7 XY7CP | M | - | | 07/86 ▸ 02/01 | 95593547 | **698342** | |
| 1.4 | VDPJ | E | 1360 | XY7 | M | | | 07/86 ▸ 05/88 | 95593547 | **698342** | |
| 1.7 D | VDSX, VDP/B/BF/G/P/PF | D | 1769 | XUD7 | M | - | | 10/84 ▸ 02/01 | 95593547 | **698342** | |
| 1.9 D | VDV/V/W/Y | D | 1868 | DW8B | M | | | 03/01 ▸ 12/05 | 95593547 | **698342** | |
| **PEUGEOT** | | | | | | | | | | | |
| **306 (93>97)** | | | | | | | | | | | |
| 1.1 i | 7AH/DY2/DZ2, 7CH/DY2/DZ2, 7SH/DY2/DZ2 | E | 1124 | TU1M,TU1M+ | M | + | | 02/93 ▸ 02/97 | 125333 | **698305** | |

# PEUGEOT (.../...)

## 306 (93>97) (.../...)

| Type Ctr. | | CC | | AC | | 2+3 | OE | Valeo |
|---|---|---|---|---|---|---|---|---|
| 1.4,1.4 i 7AK/2D2/DX2/DX9, 7BK 2D2/2D9/DX2/DX9/FX2, 7CK/2D2/DX2/DX9, 7SK 2D2/DX2 | E | 1360 | TU3.2,TU3JP,TU3MC | M | + | | 02/93 ▸ 02/97 | 125333 | **698305** |
| 1.6 i 7DNFZ2 | E | 1587 | TU5JP | M | + | | 10/93 ▸ 02/97 | 125333 | **698305** |
| 1.8 i 7AL/6A2/6A9/FZ2/FZ8/FZ9, 7BL/6A2/6A9/FZ2/FZ8 FZ9, 7CL/FZ2/FZ8/FZ9, 7DL/6A2/FZ2/FZ8 | E | 1761 | XU7JP | M | + | | 02/93 ▸ 02/97 | 125333 | **698305** |
| 2.0 i 7AR/6D2/FT2/FX2/FX8/FY2, 7BR/FX2/FX8, 7CR 6D2/FT2/FX2/FX8/FY2, 7DR/6D2/FX2 | E | 1998 | XU10J2,XU10J2C,XU10J4 | M | + | | 06/93 ▸ 02/97 | 125333 | **698305** |

## 309 (85>89)

| | | | | | | | | | |
|---|---|---|---|---|---|---|---|---|---|
| 1.1 10A/E11/E12, 10C/E11/E12/G10 | E | 1118 | E1 | M | | | 09/85 ▸ 06/89 | 1250A9 | |
| 1.1 10A/E11/E12, 10C/E11/E12/G10 | E | 1118 | E1 | M | | | 09/85 ▸ 06/89 | 1250C3 | **698301** |
| 1.3 10A/G12/G22, 10C/D22/G12/G27, 10S/E11/E12 G11/G12 | E | 1294 | G1A,G1B,G2,G2S | M | | | 09/85 ▸ 07/89 | 1250A9 | |
| 1.3 10A/G12/G22, 10C/D22/G12/G27, 10S/E11/E12 G11/G12 | E | 1294 | G1A,G1B,G2,G2S | M | | | 09/85 ▸ 07/89 | 1250C3 | **698301** |
| 1.4,1.4 i 10A/K12/K22/KD2, 10C K12/K22/KD2 | E | 1360 | TU3,TU3M,TU3S | M | | | 08/88 ▸ 07/89 | 1250A9 | |
| 1.4,1.4 i 10A/K12/K22/KD2, 10C K12/K22/KD2 | E | 1360 | TU3,TU3M,TU3S | M | | | 08/88 ▸ 07/89 | 1250C3 | **698301** |
| 1.5 10AY22 | E | 1442 | Y2 | M | | | 08/86 ▸ 06/89 | 1250C3 | **698301** |
| 1.5 10AY22 | E | 1442 | Y2 | M | | | 08/86 ▸ 06/89 | 1250A9 | |
| 1.6,1.6 i 10A/B11/B12/B22/B31 B32/B51/B62/BA2, 10C/B12/B22/B62/BA2/G22 | E | 1580 | XU51C,XU52C,XU5CP,XU5J1,XU5JA | M | | | 09/85 ▸ 07/89 | 1250A9 | |
| 1.6,1.6 i 10A/B11/B12/B22/B31 B32/B51/B62/BA2, 10C/B12/B22/B62/BA2/G22 | E | 1580 | XU51C,XU52C,XU5CP,XU5J1,XU5JA | M | | | 09/85 ▸ 07/89 | 1250C3 | **698301** |
| 1.6 10A/B14/BA4, 10C/B14/BA4 | E | 1580 | XU51C | A | | | 09/85 ▸ 07/89 | 1250A9 | |
| 1.6 10A/B14/BA4, 10C/B14/BA4 | E | 1580 | XU51C | A | | | 09/85 ▸ 07/89 | 1250C3 | **698301** |
| 1.6 10AJ22 | E | 1592 | J2 | M | | | 08/86 ▸ 06/89 | 1250C3 | **698301** |
| 1.6 10AJ22 | E | 1592 | J2 | M | | | 08/86 ▸ 06/89 | 1250A9 | |
| 1.9,1.9 i 10A/D22/D62/DD2/DF2 DK2, 10C/B62/D22/D62/DD2/DE2/DF2/DK2 | E | 1905 | XU92C,XU9JA,XU9JAZ,XU9M | M | | | 09/85 ▸ 07/89 | 1250C3 | **698301** |
| 1.9,1.9 i 10A/D22/D62/DD2/DF2 DK2, 10C/B62/D22/D62/DD2/DE2/DF2/DK2 | E | 1905 | XU92C,XU9JA,XU9JAZ,XU9M | M | | | 09/85 ▸ 07/89 | 1250A9 | |
| 1.9 i 10CDF4, 10A/D64/DF4 | E | 1905 | XU9JA | A | | | 08/88 ▸ 07/89 | 1250A9 | |
| 1.9 i 10CDF4, 10A/D64/DF4 | E | 1905 | XU9JA | A | | | 08/88 ▸ 07/89 | 1250C3 | **698301** |
| 1.7 D 10CA92, 10SA92, 10A/A92 | D | 1769 | XUD7 | M | | | 08/86 ▸ 06/89 | 1250A9 | |
| 1.7 D 10CA92, 10SA92, 10A/A92 | D | 1769 | XUD7 | M | | | 08/86 ▸ 06/89 | 1250C3 | **698301** |
| 1.9 D 10A/D92/DJ2, 10SD92, 10C/D92/DJ2 | D | 1905 | XUD9 | M | | | 08/86 ▸ 07/89 | 1250A9 | |
| 1.9 D 10A/D92/DJ2, 10SD92, 10C/D92/DJ2 | D | 1905 | XUD9 | M | | | 08/86 ▸ 07/89 | 1250C3 | **698301** |

## 309 (89>94)

| | | | | | | | | | |
|---|---|---|---|---|---|---|---|---|---|
| 1.1 3CB2A2, 3CE1A2, 3SE1A2, 3AE/1A2 | E | 1118 | E1 | M | | | 08/89 ▸ 07/92 | 1250C3 | **698301** |
| 1.1 3CB2A2, 3CE1A2, 3SE1A2, 3AE/1A2 | E | 1118 | E1 | M | | | 08/89 ▸ 07/92 | 1250A9 | |
| 1.1,1.1 i 3AH/1A1/1A2/DZ2, 3CH 1A1/1A2/DZ2, 3SH/1A1/1A2 | E | 1124 | TU1,TU1M | M | | | 08/89 ▸ 08/93 | 1250A9 | |
| 1.1,1.1 i 3AH/1A1/1A2/DZ2, 3CH 1A1/1A2/DZ2, 3SH/1A1/1A2 | E | 1124 | TU1,TU1M | M | | | 08/89 ▸ 08/93 | 1250C3 | **698301** |
| 1.3 3CG1A2, 3SG1A2, 3AG/1A2 | E | 1294 | G1A | M | | | 08/89 ▸ 07/92 | 1250A9 | |
| 1.3 3CG1A2, 3SG1A2, 3AG/1A2 | E | 1294 | G1A | M | | | 08/89 ▸ 07/92 | 1250C3 | **698301** |
| 1.4,1.4 i 3AK/1D2/1G2/2B2/2D2 3A1/3AZ/DY2/DZ2, 3SK1G2, 3CK/1D2/1G2/2B2/2D2 DY2/DZ2 | E | 1360 | TU3,TU3A,TU3F2,TU3M,TU3S | M | | | 08/89 ▸ 08/94 | 1250A9 | |
| 1.4,1.4 i 3AK/1D2/1G2/2B2/2D2 3A1/3AZ/DY2/DZ2, 3SK1G2, 3CK/1D2/1G2/2B2/2D2 DY2/DZ2 | E | 1360 | TU3,TU3A,TU3F2,TU3M,TU3S | M | | | 08/89 ▸ 08/94 | 1250C3 | **698301** |
| 1.5 3AY2A2 | E | 1442 | Y2 | M | | | 08/89 ▸ 07/92 | 1250C3 | **698301** |
| 1.5 3AY2A2 | E | 1442 | Y2 | M | | | 08/89 ▸ 07/92 | 1250A9 | |
| 1.6,1.6 i 3AB/2B2/5A2/6D2/6E2 DY2/DZ2, 3CB/2B2/DY2/DZ2 | E | 1580 | XU52C,XU5JA,XU5M | M | | | 08/89 ▸ 08/93 | 1250A9 | |
| 1.6,1.6 i 3AB/2B2/5A2/6D2/6E2 DY2/DZ2, 3CB/2B2/DY2/DZ2 | E | 1580 | XU52C,XU5JA,XU5M | M | | | 08/89 ▸ 08/93 | 1250C3 | **698301** |
| 1.6,1.6 i 3AB/2B4/DY4, 3CB/2A4 2B4/DY4 | E | 1580 | XU52C,XU5M | A | | | 08/89 ▸ 08/93 | 1250A9 | |
| 1.6,1.6 i 3AB/2B4/DY4, 3CB/2A4 2B4/DY4 | E | 1580 | XU52C,XU5M | A | | | 08/89 ▸ 08/93 | 1250C3 | **698301** |
| 1.6 3AJ2A2 | E | 1592 | J2 | M | | | 08/89 ▸ 07/92 | 1250C3 | **698301** |
| 1.6 3AJ2A2 | E | 1592 | J2 | M | | | 08/89 ▸ 07/92 | 1250A9 | |
| 1.9,1.9 i,1.9 i 16V 3AD/2A2/2H2/6B2/DZ2 KZ2, 3CD/2A2/2H2/6B2/6C2/DZ2/FW2/KZ2 | E | 1905 | XU92C,XU9J4,XU9JA,XU9JAZ,XU9M | M | | | 08/89 ▸ 08/93 | 1250A9 | |

Fan Motor Moteur de ventilateur Lüftermotor Motoventole Ventilatormotor Fan motoru
Motor del ventilador Motor вентилятора Ventilátor motor Motor sahary Ventilator motor Μοτέρ ανεμιστήρων



• **New** Nouveau **Nuevo** Novo **Nuovo** Nieuw **Neu** Nowość **Yeni** Новый Νέο **Nový**

# PEUGEOT (.../...)

## 309 (89>94) (.../...)

| | | | | | | | | | | | |
|---|---|---|---|---|---|---|---|---|---|---|---|
| 1.9,1.9 i,1.9 i 16V | 3AD/2A2/2H2/6B2/DZ2 KZ2, 3CD/2A2/2H2/6B2/6C2/DZ2/FW2/KZ2 | E | 1905 | XU92C,XU9J4,XU9JA,XU9JAZ,XU9M | M | | | 08/89 ▸ 08/93 | 1250C3 | 698301 | |
| 1.9 i | 3AD/FZ4/KZ4, 3CD/FZ4/KZ4 | E | 1905 | XU9J1,XU9JAZ | A | | | 08/90 ▸ 08/93 | 1250A9 | | |
| 1.9 i | 3AD/FZ4/KZ4, 3CD/FZ4/KZ4 | E | 1905 | XU9J1,XU9JAZ | A | | | 08/90 ▸ 08/93 | 1250C3 | 698301 | |
| 1.7 D | 3AA/9A2/9A9, 3SA9A2, 3CA/9A2/9A9 | D | 1769 | XUD7 | M | | | 08/89 ▸ 08/94 | 1250C3 | 698301 | |
| 1.7 D,1.7 TD | 3AA/8B2/9A2/9A9 3SA9A2, 3CA/8B2/9A2/9A9 | D | 1769 | XUD7,XUD7T | M | | | 08/89 ▸ 08/94 | 1250A9 | | |
| 1.7 TD | 3AA8B2 | D | 1769 | XUD7T | M | | | 03/91 ▸ 08/93 | 1250E6 | 698305 | |
| 1.9 D | 3AD/9A2/JZ2, 3SD9A2, 3CD/9A2/JZ2 | D | 1905 | XUD9 | M | | | 08/89 ▸ 08/93 | 1250C3 | 698301 | |
| 1.9 D | 3AD/9A2/JZ2, 3SD9A2, 3CD/9A2/JZ2 | D | 1905 | XUD9 | M | | | 08/89 ▸ 08/93 | 1250A9 | | |

## 405 (87>92)

| | | | | | | | | | | | |
|---|---|---|---|---|---|---|---|---|---|---|---|
| 1.4 i GPL | 15BK11 | G | 1360 | TU3-G | M | +/- | | 06/87 ▸ 06/91 | 125315 | 698301 | |
| 1.4 | 15B/K11/K12/K21/K22/K31/K32 | E | 1360 | TU3,TU3&3A,TU3.2,TU3A | M | +/- | | 06/87 ▸ 06/92 | 125315 | 698301 | |
| 1.6,1.6 i | 15B/8A2/B12/B22/B32 B52/BD2 | E | 1580 | XU51C,XU52C,XU5CP,XU5M | M | +/- | | 06/87 ▸ 06/92 | 125315 | 698301 | |
| 1.6,1.6 i | 15SB22, 15E/B12/B22 B32/B52/BD2 | E | 1580 | XU51C,XU52C,XU5M | M | | | 06/88 ▸ 06/92 | 125315 | 698301 | |
| 1.6,1.6 i | 15B/B24/BD4 | E | 1580 | XU52C,XU5M | A | +/- | | 07/88 ▸ 06/92 | 125315 | 698301 | |
| 1.6,1.6 i | 15E/B24/BD4 | E | 1580 | XU52C,XU5M | A | | | 06/88 ▸ 06/92 | 125315 | 698301 | |
| 1.9,1.9 i,1.9 i 16V | 15B/D22/D27/D52/D62 D67/DD2/DD7/DF2/DF7/DK2 | E | 1905 | XU92C,XU9J1,XU9J2,XU9J4 XU9JAZ,XU9M | M | +/- | | 06/87 ▸ 06/92 | 125315 | 698301 | |
| 1.9,1.9 i,1.9 i 16V | 15E/D22/D27/D52/D62 DD2/DD7/DF2/DF7/DK2 | E | 1905 | XU92C,XU9J1,XU9J2,XU9J4 XU9JAZ,XU9M | M | | | 06/88 ▸ 06/92 | 125315 | 698301 | |
| 1.9,1.9 i | 15B/D24/D54/D64/DF4 DK4 | E | 1905 | XU92C,XU9J1A,XU9J2,XU9JAZ | A | +/- | | 06/87 ▸ 06/92 | 125315 | 698301 | |
| 1.9,1.9 i | 15E/D24/D54/D64/DD2 DF4/DK4 | E | 1905 | XU92C,XU9J1,XU9J1A,XU9J2 XU9JAZ,XU9M | A | | | 06/88 ▸ 06/92 | 125315 | 698301 | |
| 1.7 TD | 15B/A82/A92/AJ2 | D | 1769 | XUD7TE | M | +/- | | 06/87 ▸ 06/92 | 125315 | 698301 | |
| 1.7 D,1.7 TD | 15SA92, 15E/A82/A92 AJ2 | D | 1769 | XUD7,XUD7TE | M | | | 06/88 ▸ 06/92 | 125315 | 698301 | |
| 1.9 D | 15B/D92/DJ2 | D | 1905 | XUD9A | M | +/- | | 06/87 ▸ 06/92 | 125315 | 698301 | |
| 1.9 D | 15SD92, 15E/D92/DJ2 | D | 1905 | XUD9A | M | | | 06/88 ▸ 06/92 | 125315 | 698301 | |

## 405 (92>96)

| | | | | | | | | | | | |
|---|---|---|---|---|---|---|---|---|---|---|---|
| 1.4,1.4 i | 4BK/2D2/DX2 | E | 1360 | TU3.2,TU3M,TU3MC | M | | | 07/92 ▸ 10/95 | 125315 | 698301 | |
| 1.6,1.6 i | 4BB/2A2/5A2/DY2/FZ2 | E | 1580 | XU52C,XU5JP,XU5M | M | +/- | | 07/92 ▸ 10/95 | 125315 | 698301 | |
| 1.6,1.6 i | 4BB/2A2/5A2/DY2/FZ2 | E | 1580 | XU52C,XU5JP,XU5M | M | +/- | | 07/92 ▸ 10/95 | 125329 | 698303 | |
| 1.6,1.6 i | 4EB/2A2/5A2/DY2/FZ2 4SB/2A2/DY2/FZ2 | E | 1580 | XU52C,XU5JP,XU5M | M | | | 07/92 ▸ 10/96 | 125315 | 698301 | |
| 1.6,1.6 i | 4EB/2A2/5A2/DY2/FZ2 4SB/2A2/DY2/FZ2 | E | 1580 | XU52C,XU5JP,XU5M | M | | | 07/92 ▸ 10/96 | 125329 | 698303 | |
| 1.6,1.6 i | 4BB/2A4/DY4/FZ4 | E | 1580 | XU52C,XU5JP,XU5M | A | +/- | | 07/92 ▸ 10/95 | 125315 | 698301 | |
| 1.6,1.6 i | 4BB/2A4/DY4/FZ4 | E | 1580 | XU52C,XU5JP,XU5M | A | +/- | | 07/92 ▸ 10/95 | 125329 | 698303 | |
| 1.6,1.6 i | 4EB/2A4/DY4/FZ4 | E | 1580 | XU52C,XU5JP,XU5M | A | | | 07/92 ▸ 10/96 | 125315 | 698301 | |
| 1.6,1.6 i | 4EB/2A4/DY4/FZ4 | E | 1580 | XU52C,XU5JP,XU5M | A | | | 07/92 ▸ 10/96 | 125329 | 698303 | |
| 1.8 i | 4BL/6A2/FZ2 | E | 1761 | XU7JP,XU7JPPR | M | +/- | | 07/92 ▸ 10/95 | 125329 | 698303 | |
| 1.8 i | 4BL/6A2/FZ2 | E | 1761 | XU7JP,XU7JPPR | M | +/- | | 07/92 ▸ 10/95 | 125315 | 698301 | |
| 1.8 i | 4EL/6A2/FZ2 | E | 1761 | XU7JP,XU7JPPR | M | | | 07/92 ▸ 10/96 | 125329 | 698303 | |
| 1.8 i | 4EL/6A2/FZ2 | E | 1761 | XU7JP,XU7JPPR | M | | | 07/92 ▸ 10/96 | 125315 | 698301 | |
| 1.8 i | 4BLFZ4 | E | 1761 | XU7JP | A | +/- | | 07/92 ▸ 10/95 | 125329 | 698303 | |
| 1.8 i | 4BLFZ4 | E | 1761 | XU7JP | A | +/- | | 07/92 ▸ 10/95 | 125315 | 698301 | |
| 1.8 i | 4ELFZ4 | E | 1761 | XU7JP | A | | | 07/92 ▸ 10/96 | 125315 | 698301 | |
| 1.8 i | 4ELFZ4 | E | 1761 | XU7JP | A | | | 07/92 ▸ 10/96 | 125329 | 698303 | |
| 1.9,1.9 i | 4BD/2H2/2H6/2H8/5A2 6D2 | E | 1905 | XU92C,XU9J2 | M | +/- | | 07/92 ▸ 10/95 | 125315 | 698301 | |
| 1.9,1.9 i | 4BD/2H2/2H6/2H8/6D2 | E | 1905 | XU92C,XU9J2 | M | +/- | | 07/92 ▸ 10/95 | 125329 | 698303 | |
| 1.9,1.9 i | 4ED/2H2/2H8/5A2/6D2 | E | 1905 | XU92C,XU9J2 | M | | | 07/92 ▸ 10/96 | 125315 | 698301 | |
| 1.9,1.9 i | 4ED/2H2/2H8/5A2/6D2 | E | 1905 | XU92C,XU9J2 | M | | | 07/92 ▸ 10/96 | 125329 | 698303 | |
| 1.9,1.9 i | 4BD/2H4/5A4/6D4 | E | 1905 | XU92C,XU9J2 | A | +/- | | 07/92 ▸ 10/95 | 125315 | 698301 | |
| 1.9,1.9 i | 4BD/2H4/5A4/6D4 | E | 1905 | XU92C,XU9J2 | A | +/- | | 07/92 ▸ 10/95 | 125329 | 698303 | |
| 1.9 | 4ED2H4 | E | 1905 | XU92C | A | | | 07/92 ▸ 10/96 | 125329 | 698303 | |
| 1.9 | 4ED2H4 | E | 1905 | XU92C | A | | | 07/92 ▸ 10/96 | 125315 | 698301 | |
| 2.0 i,2.0 i Turbo 16S | 4BR/FX2/FX7/FY2/GZ7 | E | 1998 | XU10J2,XU10J4,XU10J4TE | M | +/- | | 07/92 ▸ 10/95 | 125329 | 698303 | |
| 2.0 i,2.0 i Turbo 16S | 4BR/FX2/FX7/FY2/GZ7 | E | 1998 | XU10J2,XU10J4,XU10J4TE | M | +/- | | 07/92 ▸ 10/95 | 125315 | 698301 | |
| 2.0 i | 4ER/6D2/FX2/FX7 | E | 1998 | XU10J2,XU10J2C | M | | | 07/92 ▸ 10/96 | 125315 | 698301 | |
| 2.0 i | 4ER/6D2/FX2/FX7 | E | 1998 | XU10J2,XU10J2C | M | | | 07/92 ▸ 10/96 | 125329 | 698303 | |
| 2.0 i | 4BRFX4 | E | 1998 | XU10J2 | A | +/- | | 07/92 ▸ 10/95 | 125315 | 698301 | |
| 2.0 i | 4BRFX4 | E | 1998 | XU10J2 | A | +/- | | 07/92 ▸ 10/95 | 125329 | 698303 | |
| 2.0 i | 4ER/6D4/FX4 | E | 1998 | XU10J2,XU10J2C | A | | | 07/92 ▸ 10/96 | 125315 | 698301 | |

# PEUGEOT (.../...)

## 405 (92>96) (.../...)

| | | | CC | | | AC | | | OE | Valeo |
|---|---|---|---|---|---|---|---|---|---|---|
| 2.0 i | 4ER/6D4/FX4 | E | 1998 | XU10J2,XU10J2C | A | | | 07/92 ▸ 10/96 | 125329 | **698303** |
| 1.7 TD | 15BA82 | D | 1769 | XUD7TE | M | +/- | | 1994 ▸ 10/95 | 125329 | **698303** |
| 1.7 TD | 15BA82 | D | 1769 | XUD7TE | M | +/- | | 1994 ▸ 10/95 | 125315 | **698301** |
| 1.9 D,1.9 TD | 4BD/8A2/9B2/HY2/JZ2 | D | 1905 | XUD9A,XUD9TE | M | +/- | | 07/92 ▸ 10/95 | 125315 | **698301** |
| 1.9 D,1.9 TD | 4BD/8A2/9B2/HY2/JZ2 | D | 1905 | XUD9A,XUD9TE | M | +/- | | 07/92 ▸ 10/95 | 125329 | **698303** |
| 1.9 D,1.9 TD | 4SD9B2, 4ED/9B2/HY2 JY2/JZ2 | D | 1905 | XUD9A,XUD9TE | M | | | 07/92 ▸ 10/96 | 125329 | **698303** |
| 1.9 D,1.9 TD | 4SD9B2, 4ED/8A2/9B2 HY2/JY2/JZ2 | D | 1905 | XUD9A,XUD9TE | M | | | 07/92 ▸ 10/96 | 125315 | **698301** |

## 605 (94>99)

| | | | CC | | | AC | | | OE | Valeo |
|---|---|---|---|---|---|---|---|---|---|---|
| 2.0 i,2.0 i 16V<br>2.0 i Turbo | 6BR/6A8/6E2/FV2/FV9<br>FVE/GX2/GXE | E | 1998 | XU10J2,XU10J2TE,XU10J4R | M | +/- | | 03/95 ▸ 05/99 | 125315 | **698301** |
| 2.0 i Turbo | 6BR/GX4/GXP | E | 1998 | XU10J2TE | A | +/- | | 07/94 ▸ 05/99 | 125329 | **698303** |
| 2.0 i,2.0 i Turbo | 6BR/6A4/GX4/GXP | E | 1998 | XU10J2,XU10J2TE | A | +/- | | 03/95 ▸ 05/99 | 125315 | **698301** |
| 3.0 i V6,3.0 i V6 24V | 6BU/FZ2/KZ2 | E | 2963 | ZPJ,ZPJ4 | M | +/- | | 03/95 ▸ 06/97 | 125315 | **698301** |
| 2.1 TD Turbo | 6BP/8B2/8C2/8CE/HZ2 | D | 2088 | XUD11ATE,XUD11BTE | M | + | | 07/94 ▸ 05/99 | 125329 | **698303** |
| 2.1 TD Turbo | 6BP/8B4/HZ4 | D | 2088 | XUD11ATE | A | +/- | | 07/94 ▸ 07/95 | 125329 | **698303** |
| 2.1 TD Turbo<br>07145 ▸ 07540 | 6BP/8C2/8CE | D | 2088 | XUD11BTE | M | - | | 06/96 ▸ 07/97 | 125331 | **698304** |
| 2.5 TD | 6BTHY2 | D | 2446 | DK5ATE | M | +/- | | 07/94 ▸ 07/95 | 125329 | **698303** |

# RENAULT

## R4

| | | | CC | | | AC | | | OE | Valeo |
|---|---|---|---|---|---|---|---|---|---|---|
| 1.1 GPL | R112, R237, 210/B | G | 1108 | 688 | M | | | 09/75 ▸ 1992 | 7700828623 | **698004** |
| 1.1 GPL | R210 | G | 1108 | 688 | | | | 09/82 ▸ 1992 | 7700828623 | **698004** |
| 1.0 | R112 | E | 956 | C1C | M | | | 07/86 ▸ 1990 | 7700828623 | **698004** |
| 1.0 | R112 | E | 956 | C1C | | | | 07/86 ▸ 1992 | 7700828623 | **698004** |
| 1.1 | R112, R210, 3C2/3, R243, R23/7/9 | E | 1108 | 688,C1E | M | | | 07/75 ▸ 1992 | 7700828623 | **698004** |
| 1.1 | R210 | E | 1108 | C1E | | | | 09/82 ▸ 1992 | 7700828623 | **698004** |

## SUPER 5

| | | | CC | | | AC | | | OE | Valeo |
|---|---|---|---|---|---|---|---|---|---|---|
| 0.9 | C400, S400, B40/0 | E | 956 | C1C | M | - | | 07/84 ▸ 12/92 | 7700828623 | **698004** |
| 1.1 | B40/1/H, S401, C40/1/H | E | 1108 | C1E | M | - | | 07/84 ▸ 12/96 | 7700828623 | **698004** |
| 1.2 | C40F, S40F, B40/F | E | 1237 | C1G | M | - | | 06/86 ▸ 08/90 | 7700828623 | **698004** |
| 1.4 i | C407, S407, B40/7 | E | 1390 | C3J | M | - | | 07/86 ▸ 12/96 | 7700828623 | **698004** |
| 1.4,1.4 i | B40/2/3/7/J/M, C40/2 3/7/J/M | E | 1397 | C1J,C2J,C3J | M | - | | 07/84 ▸ 08/90 | 7700828623 | **698004** |
| 1.4 Turbo | C405 | E | 1397 | C1J | M | - | | 07/84 ▸ 08/90 | 7700789732 | **698007** |
| 1.4 | B40/3/J, C40/3/J | E | 1397 | C2J | A | - | | 07/84 ▸ 08/90 | 7700828623 | **698004** |
| 1.7 | B40/8/G/K, C40/8/9/G/K | E | 1721 | F2N,F3N | M | - | | 06/86 ▸ 08/90 | 7700828623 | **698004** |
| 1.7 | B408, C408 | E | 1721 | F3N | A | - | | 06/86 ▸ 08/90 | 7700828623 | **698004** |
| 1.6 D | C404, S404, B40/4 | D | 1595 | F8M | M | - | | 06/85 ▸ 12/92 | 7700828623 | **698004** |
| 1.6 D | C404, S404, B40/4 | D | 1595 | F8M | M | - | | 06/85 ▸ 12/92 | 7700789732 | **698007** |

## R9

| | | | CC | | | AC | | | OE | Valeo |
|---|---|---|---|---|---|---|---|---|---|---|
| 1.1 | L421 | E | 1108 | C1E | M | - | | 10/81 ▸ 05/87 | 7700828623 | **698004** |
| 1.2 | L42S | E | 1237 | C1G | M | - | | 07/85 ▸ 09/88 | 7700828623 | **698004** |
| 1.4,1.4 Turbo | L42/2/3/5 | E | 1397 | C1J,C2J | M | + | | 10/81 ▸ 12/88 | 7700789732 | **698007** |
| 1.4,1.4 Turbo | L42/2/3/5/A/C/J/R | E | 1397 | C1J,C2J,C3J | M | - | | 10/81 ▸ 12/88 | 7700828623 | **698004** |
| 1.4 | L423 | E | 1397 | C2J | A | + | | 10/81 ▸ 1988 | 7700789732 | **698007** |
| 1.4 | L423 | E | 1397 | C2J | A | - | | 10/81 ▸ 1988 | 7700828623 | **698004** |
| 1.7 | L42/6/N | E | 1721 | F2N | M | + | | 09/83 ▸ 12/88 | 7700789732 | **698007** |
| 1.7 | L42/6/D/E/F/L/N | E | 1721 | F2N,F3N | M | - | | 09/83 ▸ 12/88 | 7700828623 | **698004** |
| 1.7 | L426 | E | 1721 | F2N | A | + | | 09/87 ▸ 12/88 | 7700789732 | **698007** |
| 1.7 | L426 | E | 1721 | F2N | A | - | | 09/87 ▸ 12/88 | 7700828623 | **698004** |
| 1.6 D | L424 | D | 1595 | F8M | M | + | | 10/82 ▸ 12/88 | 7700789732 | **698007** |
| 1.6 D | L424 | D | 1595 | F8M | M | - | | 10/82 ▸ 12/88 | 7700828623 | **698004** |

## R11

| | | | CC | | | AC | | | OE | Valeo |
|---|---|---|---|---|---|---|---|---|---|---|
| 1.4 GPL | B373 | G | 1397 | C2J | M | + | | 07/84 ▸ 07/87 | 7700789732 | **698007** |
| 1.4 GPL | B373 | G | 1397 | C2J | M | - | | 07/84 ▸ 07/87 | 7700828623 | **698004** |
| 1.7 GPL | B376 | G | 1721 | F2N | M | + | | 07/83 ▸ 07/89 | 7700789732 | **698007** |
| 1.7 GPL | B376 | G | 1721 | F2N | M | - | | 07/83 ▸ 07/89 | 7700828623 | **698004** |
| 1.1 | C371, S371, B37/1 | E | 1108 | C1E | M | - | | 07/82 ▸ 05/87 | 7700828623 | **698004** |
| 1.2 | C37S, S37S, B37/S | E | 1237 | C1G | M | - | | 07/84 ▸ 07/89 | 7700828623 | **698004** |
| 1.4 | B37/2/3, C37/2/3 | E | 1397 | C1J,C2J | M | + | | 07/82 ▸ 06/83 | 7701203126 | **698004** |
| 1.4 | B37/2/3, C37/2/3, S37/2/3 | E | 1397 | C1J,C2J | M | + | | 07/83 ▸ 07/89 | 7700789732 | **698007** |

Fan Motor Moteur de ventilateur Lüftermotor Motoventole Ventilatormotor Fan motoru
Motor del ventilador Motor вентилятора Ventilátor motor Motor sahary Ventilator motor Μοτέρ ανεμιστήρων



• **New** Nouveau **Nuevo** Novo **Nuovo** Nieuw **Neu** Nowość **Yeni** Новый Νέο **Novy**

## R11 (.../...)

| | | | CC | | | AC | | | OE | Valeo |
|---|---|---|---|---|---|---|---|---|---|---|
| 1.4,1.4 Turbo,1.4 i | B37/2/3/5/A/C/R/S C37/2/3/5/A/C/R, S37/2/3 | E | 1397 | C1J,C2J,C3J | M | - | | 07/82 ▸ 07/89 | 7700828623 | 698004 |
| 1.4 | C373 | E | 1397 | C2J | A | + | | 07/82 ▸ 06/83 | 7701203126 | 698004 |
| 1.4 | B373, C373 | E | 1397 | C2J | A | + | | 07/83 ▸ 07/89 | 7700789732 | 698007 |
| 1.4 | B373, C373 | E | 1397 | C2J | A | - | | 07/82 ▸ 07/89 | 7700828623 | 698004 |
| 1.7 | B376 | E | 1721 | F2N | M | +/- | | 07/83 ▸ 06/87 | 7700789732 | 698007 |
| 1.7 | C376, B37/6/N | E | 1721 | F2N | M | + | | 07/83 ▸ 07/89 | 7700789732 | 698007 |
| 1.7 | B37N | E | 1721 | F2N | M | + | | 10/86 ▸ 06/83 | 7701203126 | 698004 |
| 1.7,1.7 i | B37/6/D/E/F/L/N, C37 6/D/E/F/L/N | E | 1721 | F2N,F3N | M | - | | 07/83 ▸ 07/89 | 7700828623 | 698004 |
| 1.7 | C37N | E | 1721 | F2N | M | - | | 10/86 ▸ 07/89 | 7700789732 | 698007 |
| 1.7 | B376 | E | 1721 | F2N | A | +/- | | 06/87 ▸ 07/89 | 7700789732 | 698007 |
| 1.7 | B376 | E | 1721 | F2N | A | - | | 06/87 ▸ 07/89 | 7700828623 | 698004 |
| 1.6 D | C374, S374, B37/4 | D | 1595 | F8M | M | + | | 07/83 ▸ 07/89 | 7700789732 | 698007 |
| 1.6 D | C374, S374, B37/4 | D | 1595 | F8M | M | - | | 07/83 ▸ 07/89 | 7700828623 | 698004 |

## R18

| | | | CC | | | AC | | | OE | Valeo |
|---|---|---|---|---|---|---|---|---|---|---|
| 1.4 | 1350, 2350 | E | 1397 | 847 | M | + | | 1981 ▸ 06/84 | 7700750158 | 698004 |
| 1.4 | 134/0, 2350, 135/0/9 | E | 1397 | 847 | M | - | | 02/79 ▸ 06/84 | 7701349413 | 698007 |
| 1.4 | 134/0, 2350, 135/0/9 | E | 1397 | 847 | M | - | | 07/83 ▸ 1986 | 7700762507 | 698004 |
| 1.4 | 1340 | E | 1397 | 847 | A | - | | 03/79 ▸ 06/83 | 7701349413 | 698007 |
| 1.4 | 1340 | E | 1397 | 847 | A | - | | 07/83 ▸ 1986 | 7700762507 | 698004 |
| 1.6 Turbo,1.6 i Turbo | 134/5/A, 135/5/A | E | 1565 | A5L,A7L | M | - | | 09/80 ▸ 06/84 | 7701349413 | 698007 |
| 1.6 Turbo,1.6 i Turbo | 134/5/A, 135/5/A | E | 1565 | A5L,A7L | M | - | | 07/83 ▸ 1986 | 7700758428 | 698007 |
| 1.6 | 1351 | E | 1647 | 841,A2M | M | + | | 03/82 ▸ 06/84 | 7700750158 | 698004 |
| 1.6 | 134/1/2 | E | 1647 | A2M,A6M | M | + | | 06/82 ▸ 1986 | 7700782480 | 698007 |
| 1.6,1.6 i | 135/1/8 | E | 1647 | 841,843 | M | - | | 07/79 ▸ 06/83 | 7700758428 | 698007 |
| 1.6 | 134/1/2 | E | 1647 | A2M,A6M | M | - | | 06/82 ▸ 1986 | 7700828623 | 698004 |
| 1.6 | 1351 | E | 1647 | 841,A2M | M | - | | 06/82 ▸ 06/84 | 7701349413 | 698007 |
| 1.6 | 1341 | E | 1647 | 841 | A | + | | 06/82 ▸ 1986 | 7700782480 | 698007 |
| 1.6,1.6 i | 135/1/8 | E | 1647 | 841,843 | A | - | | 07/79 ▸ 06/83 | 7700758428 | 698007 |
| 1.6 | 134/1/2 | E | 1647 | 841,A6M | A | - | | 06/82 ▸ 1986 | 7700828623 | 698004 |
| 2.0 | 1343, 1353 | E | 1995 | J6R | M | - | | 09/81 ▸ 06/84 | 7701349413 | 698007 |
| 2.0 | 1343 | E | 1995 | J6R | M | - | | 06/82 ▸ 1986 | 7700782480 | 698007 |
| 2.0 | 1343, 1353 | E | 1995 | J6R | M | - | | 07/83 ▸ 1986 | 7700758428 | 698007 |
| 2.0 | 1343, 1353 | E | 1995 | J6R | A | - | | 09/81 ▸ 06/84 | 7701349413 | 698007 |
| 2.0 | 1343, 1353 | E | 1995 | J6R | A | - | | 07/83 ▸ 10/86 | 7700758428 | 698007 |
| 2.2 Turbo | 135B | E | 2165 | J7T | M | - | | 07/83 ▸ 06/86 | 7700758428 | 698007 |
| 2.2 Turbo | 135B | E | 2165 | J7T | A | - | | 07/83 ▸ 1986 | 7700758428 | 698007 |
| 2.1 D,2.1 TD Turbo | 1356, 134/4/6 | D | 2068 | 852,J8S | M | + | | 06/82 ▸ 1986 | 7700782480 | 698007 |
| 2.1 D | 1354, 2354, 134/4 | D | 2068 | 852 | M | - | | 07/80 ▸ 06/84 | 7701349413 | 698007 |
| 2.1 D,2.1 TD Turbo | 1354, 2354, 134/4/6 | D | 2068 | 852,J8S | M | - | | 07/83 ▸ 1986 | 7700758428 | 698007 |
| 2.1 D | 1344 | D | 2068 | J8S | A | +/- | | 06/82 ▸ 1986 | 7700782480 | 698007 |
| 2.1 D | 1344, 1354 | D | 2068 | J8S | A | - | | 07/80 ▸ 06/84 | 7701349413 | 698007 |
| 2.1 D | 1344, 1354 | D | 2068 | J8S | A | - | | 07/83 ▸ 1986 | 7700758428 | 698007 |

## R19

| | | | CC | | | AC | | | OE | Valeo |
|---|---|---|---|---|---|---|---|---|---|---|
| 1.2 e | C53W, L53W, B53/W | E | 1171 | E7F | M | - | | 05/92 ▸ 10/95 | 7700828623 | 698004 |
| 1.2 | C530, L530, S530, B53/0 | E | 1237 | C1G | M | - | | 07/88 ▸ 10/95 | 7700828624 | 698005 |
| 1.4,1.4 i | B53/2/5, S532, L53/2 5 | E | 1390 | C3J,E7J | M | - | | 07/88 ▸ 08/95 | 7700828624 | 698005 |
| 1.4,1.4 GPL | C537, B53/7/G, S537 L53/7/G | E | 1390 | E6J | M | - | | 07/88 ▸ 10/95 | 7700789732 | 698007 |
| 1.4,1.4 GPL,1.4 e,1.4 i | B53/7/A, C53/2/5/7/A S537, L53/7/A | E | 1390 | C3J,E6J,E7J | M | - | | 07/88 ▸ 11/95 | 7700828623 | 698004 |
| 1.4,1.4 i | B53/7/A, L537, C53/7 A | E | 1390 | E6J,E7J | A | - | | 07/88 ▸ 11/95 | 7700828623 | 698004 |
| 1.4 | C537, L537, B53/7 | E | 1390 | E6J | A | - | | 07/88 ▸ 10/95 | 7700789732 | 698007 |
| 1.4 e | L53A | E | 1390 | E7J | A | - | | 05/92 ▸ 11/95 | 7700828624 | 698005 |
| 1.4 | B53H | E | 1397 | C2J | M | - | | 07/88 ▸ 04/92 | 7700818904 | 698086 |
| 1.4 | L53H, B53/H/P | E | 1397 | C2J | M | - | | 07/88 ▸ 04/92 | 7700828623 | 698004 |
| 1.4,1.4 e | B53/1/2, C53/1/2/P L53/1/2/P | E | 1397 | C1J,C2J,C3J | M | - | | 07/88 ▸ 10/95 | 7700828624 | 698005 |
| 1.7,1.7 i | B53/3/6/B/C/F/M D53C, C53/3/C/E/F/M, L53/3/6/C/F | E | 1721 | F2N,F3N | M | - | | 07/88 ▸ 11/95 | 7700818904 | 698086 |
| 1.7,1.7 i | B53/3/6/B/E/M, C53/3 B/M, L53/3/6/B/F | E | 1721 | F2N,F3N | M | - | | 07/88 ▸ 08/95 | 7700828623 | 698004 |
| 1.7 i | C53B, L53B | E | 1721 | F3N | M | - | | 05/92 ▸ 08/95 | 7700828624 | 698005 |
| 1.7 | C533, L533, B53/3 | E | 1721 | F2N | A | - | | 07/88 ▸ 08/95 | 7700789732 | 698007 |

# RENAULT (.../...)

## R19 (.../...)

| | | | CC | | | AC | | | OE | Valeo |
|---|---|---|---|---|---|---|---|---|---|---|
| 1.7,1.7 i | C53C, D53C, B53/B/C L53/3/C | E | 1721 | F2N,F3N | A | - | | 07/88 ▸ 11/95 | 7700818904 | **698086** |
| 1.7,1.7 i | C53B, B53/B, L53/3/B | E | 1721 | F2N,F3N | A | - | | 07/88 ▸ 04/92 | 7700828623 | **698004** |
| 1.7 i | C53B, L53B | E | 1721 | F3N | A | - | | 05/92 ▸ 08/95 | 7700828624 | **698005** |
| 1.8 16V,1.8 i 16V | B53/9/D, D53D, C53/9 D, L53/9/D | E | 1763 | F7P | M | - | | 07/88 ▸ 10/95 | 7700818904 | **698086** |
| 1.8 i | 353/C/D, 453/C/D/H, 853C, C538, L538, 553/A C/D/H | E | 1794 | F3P | M | - | | 05/92 ▸ 11/95 | 7700818904 | **698086** |
| 1.8 i | 453A, 853A, 353/A, C53Y, D53Y, L53Y, B53/8/Y | E | 1794 | F3P | M | - | | 05/92 ▸ 11/95 | 7700828624 | **698005** |
| 1.8 i | 353/F, 453/F/H, 853F, B53Y, 553/F/H, C53/V/Y D53/V/Y, L53/V/Y | E | 1794 | F3P | A | - | | 05/92 ▸ 11/95 | 7700818904 | **698086** |

## R21

| | | | | | | | | | | |
|---|---|---|---|---|---|---|---|---|---|---|
| 1.4 | K48/U, L48/D/U | E | 1397 | C2J,C2L | M | + | | 06/88 ▸ 1994 | 7701029940 | |
| 1.4 | K48U, B48/D, L48/D/U | E | 1397 | C2J,C2L | M | - | | 06/88 ▸ 1994 | 7700828623 | **698004** |
| 1.4 | B48U, L48U | E | 1397 | C2L | A | + | | 06/88 ▸ 03/92 | 7701029940 | |
| 1.4 | L48U | E | 1397 | C2L | A | - | | 06/88 ▸ 03/92 | 7700828623 | **698004** |
| 1.7,1.7 i | B48/1/2/4/E/F, K48/1 2/4/E/F/M/N, L48/1/2/4/E/F/M/N, S48/1/2 | E | 1721 | F2N,F3N | M | + | | 03/86 ▸ 08/95 | 7701029940 | |
| 1.7,1.7 i | B48/1/2/4/E/F, K48/1 2/4/E/F/M/N, L48/1/2/4/E/F/M/N, S48/1/2 | E | 1721 | F2N,F3N | M | - | | 03/86 ▸ 08/95 | 7700828623 | **698004** |
| 1.7,1.7 i | B48/2/E, L48/2/E | E | 1721 | F2N,F3N | A | + | | 06/88 ▸ 04/93 | 7701029940 | |
| 1.7,1.7 i | B48/2/E, L48/2/E | E | 1721 | F2N,F3N | A | - | | 06/88 ▸ 04/93 | 7700828623 | **698004** |
| 2.0 | K48J, L48J, B48/J | E | 1965 | F2R | M | + | | 06/86 ▸ 03/93 | 7701029940 | |
| 2.0 | K48J, L48J, B48/J | E | 1965 | F2R | M | - | | 06/86 ▸ 03/93 | 7700789732 | **698007** |
| 2.0 | K48J | E | 1965 | F2R | M | - | | 06/86 ▸ 04/89 | 7700828623 | **698004** |
| 2.0 | K48/3/C/R/S | E | 1995 | J6T,J7R | M | +/- | | 06/86 ▸ 04/92 | 7701029940 | |
| 2.0,2.0 i,2.0 i Turbo | K489, B48/3/C/R/Y L48/3/5/9/C/L/Q/R/S/Y | E | 1995 | J6R,J6T,J7R | M | + | | 03/86 ▸ 1994 | 7701029940 | |
| 2.0,2.0 i,2.0 i Turbo | B48/3/C/R/Y, L48/3/5 C/L/Q/R/S/Y | E | 1995 | J6T,J7R | M | - | | 03/86 ▸ 1994 | 7700828623 | **698004** |
| 2.0,2.0 i,2.0 i Turbo | K48/9, L48/5/9/L/Q/R Y | E | 1995 | J6R,J7R | M | - | | 06/86 ▸ 03/93 | 7700789732 | **698007** |
| 2.0 | K48/3/C/S | E | 1995 | J6T,J7R | A | +/- | | 06/88 ▸ 04/92 | 7701029940 | |
| 2.0,2.0 i | K489, B48/3/C, L48/3 9/C/S | E | 1995 | J6R,J6T,J7R | A | + | | 07/86 ▸ 1994 | 7701029940 | |
| 2.0,2.0 i | B48/3/C, L48/3/9/C/S | E | 1995 | J6R,J6T,J7R | A | - | | 07/86 ▸ 1994 | 7700828623 | **698004** |
| 2.0 | K489 | E | 1995 | J6R | A | - | | 06/88 ▸ 03/92 | 7700789732 | **698007** |
| 2.2,2.2 i | B48K, L48K | E | 2165 | J7T | M | + | | 08/86 ▸ 03/93 | 7701029940 | |
| 2.2,2.2 i | K48K, L48K | E | 2165 | J7T | M | - | | 06/86 ▸ 08/95 | 7700789732 | **698007** |
| 2.2,2.2 i | B48K, L48K | E | 2165 | J7T | M | - | | 06/89 ▸ 03/93 | 7700828623 | **698004** |
| 2.2,2.2 i | B48K, L48K | E | 2165 | J7T | A | + | | 08/86 ▸ 03/93 | 7701029940 | |
| 2.2,2.2 i | K48K, L48K | E | 2165 | J7T | A | - | | 08/86 ▸ 08/95 | 7700789732 | **698007** |
| 2.2,2.2 i | B48K, L48K | E | 2165 | J7T | A | - | | 06/89 ▸ 03/93 | 7700828623 | **698004** |
| 1.9 D | K48/H, S48H, L48/H/I | D | 1870 | F8Q | M | + | | 05/89 ▸ 1994 | 7701029940 | |
| 1.9 D | B48/H, L48/H/I | D | 1870 | F8Q | M | - | | 05/89 ▸ 1994 | 7700828623 | **698004** |
| 1.9 D | K48H, S48H | D | 1870 | F8Q | M | - | | 05/89 ▸ 05/91 | 7700789732 | **698007** |
| 2.1 D,2.1 TD | B48/0/6/7/8/P/V/W K48/0/6/7/8/P/V/W, S48V, L48/0/6/7/8/A/O/P V/W | D | 2068 | J8S | M | + | | 06/86 ▸ 08/95 | 7701029940 | |
| 2.1 D,2.1 TD | B48/0/6/7/8/P/V/W K48/0/6/7/8/P/V/W, L48/0/6/7/8/A/O/P/V/W S48/0/6/V | D | 2068 | J8S | M | - | | 06/86 ▸ 08/95 | 7700789732 | **698007** |

## R25

| | | | | | | | | | | |
|---|---|---|---|---|---|---|---|---|---|---|
| 2.0 | B29/2/4/7/H | E | 1995 | J6R,J7R | M | + | | 09/83 ▸ 1992 | 7701029940 | |
| 2.0 | B29/2/4/7/H | E | 1995 | J6R,J7R | M | - | | 09/83 ▸ 1992 | 7700828623 | **698004** |
| 2.0 | B29/2/7/H | E | 1995 | J6R,J7R | A | + | | 09/83 ▸ 1992 | 7701029940 | |
| 2.0 | B29/2/7/H | E | 1995 | J6R,J7R | A | - | | 09/83 ▸ 1992 | 7700828623 | **698004** |
| 2.2 | B29/B/E | E | 2165 | J7T | M | + | | 09/83 ▸ 1992 | 7701029940 | |
| 2.2 | B29/B/E | E | 2165 | J7T | M | - | | 09/83 ▸ 1992 | 7700828623 | **698004** |
| 2.2 | B29/B/E | E | 2165 | J7T | A | + | | 09/83 ▸ 1992 | 7701029940 | |
| 2.2 | B29/B/E | E | 2165 | J7T | A | - | | 09/83 ▸ 1992 | 7700828623 | **698004** |
| 2.5 V6 Turbo | B29G | E | 2458 | Z7U | M | +/- | | 06/89 ▸ 1992 | 7701029940 | |
| 2.5 V6 Turbo | B295 | E | 2458 | Z7U | M | + | | 09/85 ▸ 1992 | 7701029940 | |
| 2.5 V6 Turbo | B295 | E | 2458 | Z7U | M | - | | 09/85 ▸ 1992 | 7700789732 | **698007** |
| 2.6 V6 Injection | B298 | E | 2664 | Z7V | M | + | | 09/83 ▸ 05/88 | 7701029940 | |
| 2.6 V6 Injection | B298 | E | 2664 | Z7V | M | - | | 09/83 ▸ 05/88 | 7700789732 | **698007** |
| 2.6 V6 Injection | B298 | E | 2664 | Z7V | A | + | | 09/83 ▸ 05/89 | 7701029940 | |
| 2.6 V6 Injection | B298 | E | 2664 | Z7V | A | - | | 09/83 ▸ 05/89 | 7700789732 | **698007** |

Fan Motor Moteur de ventilateur Lüftermotor Motoventole Ventilatormotor Fan motoru
Motor del ventilador Мотор вентилятора Ventilátor motor Motor sahary Ventilator motor Μοτέρ ανεμιστήρων



• **New** Nouveau **Nuevo** Novo **Nuovo** Nieuw **Neu** Nowość **Yeni** Новый Νέο **Novy**

| | Type Ctr. | | CC | | | AC | | | OE | Valeo | |
|---|---|---|---|---|---|---|---|---|---|---|---|
| **R25 (.../...)** | | | | | | | | | | | |
| 2.8 V6,2.8 V6 Injection | B29/3/A/F | E | 2849 | Z7W | M | + | | 09/85 ▸ 1992 | 7701029940 | | |
| 2.8 V6,2.8 V6 Injection | B29/3/A/F | E | 2849 | Z7W | M | - | | 09/85 ▸ 1992 | 7700789732 | 698007 | |
| 2.8 V6 | B29/3/F | E | 2849 | Z7W | M | - | | 06/87 ▸ 05/89 | 7700828623 | 698004 | |
| 2.8 V6 | B29/3/F | E | 2849 | Z7W | A | + | | 09/85 ▸ 1992 | 7701029940 | | |
| 2.8 V6 | B29F | E | 2849 | Z7W | A | - | | 09/85 ▸ 1992 | 7700789732 | 698007 | |
| 2.8 V6 | B293 | E | 2849 | Z7W | A | - | | 06/88 ▸ 1992 | 7700828623 | 698004 | |
| 2.1 D,2.1 TD | B29/0/6/W | D | 2068 | J8S | M | + | | 09/83 ▸ 1992 | 7701029940 | | |
| **CLIO (90>98)** | | | | | | | | | | | |
| - | 557W | L | - | 2BD | M | +/- | | 03/96 ▸ 02/98 | 7700828623 | 698004 | |
| - | 557W | L | - | 2BD | M | | | 11/95 ▸ 02/96 | 7700828623 | 698004 | |
| 1.1 | B571, C571 | E | 1108 | C1E | M | +/- | | 06/90 ▸ 02/96 | 7700828623 | 698004 | |
| 1.1 | S571 | E | 1108 | C1E | M | - | | 09/90 ▸ 02/96 | 7700828623 | 698004 | |
| 1.2 i | 657K | E | 1149 | D7F | M | +/- | | 03/97 ▸ 02/98 | 7701041302 | 698316 | |
| 1.2 i | 557/K/Y | E | 1149 | D7F | M | - | | 03/96 ▸ 02/98 | 7701041302 | 698316 | |
| 1.2,1.2 i | B57/2, C57/2/R, S57 A/R | E | 1171 | E5F,E7F | M | +/- | | 06/90 ▸ 02/98 | 7700828623 | 698004 | |
| 1.2,1.2 i | 357/F/G/J/L, 557/F/G J/L/R, B57/A/N/S, C57/A/R/S, S57/2/A/R | E | 1171 | E5F,E7F | M | - | | 09/90 ▸ 02/98 | 7700828623 | 698004 | |
| 1.2 i | B57R | E | 1171 | E7F | M | | | 09/90 ▸ 02/96 | 7700828623 | 698004 | |
| 1.2 i | C577, S577, B57/7 | E | 1239 | C3G | M | - | | 07/94 ▸ 02/96 | 7700828623 | 698004 | |
| 1.4,1.4 i | 557/B, B57/3/B/J/P/T Y, C57/3/B/J/T/Y | E | 1390 | E6J,E7J | M | - | | 06/90 ▸ 02/98 | 7700828623 | 698004 | |
| 1.4,1.4 i | B57/3/B/J/T, C57/3/B J/T | E | 1390 | E6J,E7J | A | - | | 06/90 ▸ 02/98 | 7700828623 | 698004 | |
| 1.7 | B574, C574 | E | 1721 | F2N | M | - | | 06/90 ▸ 02/96 | 7700828623 | 698004 | |
| 1.8 i 16S<br>941229 ▸ | C57/5/D | E | 1763 | F7P | M | +/- | | ▸ 02/96 | 7700828623 | 698004 | |
| 1.8 i 16S<br>941229 ▸ | C57D | E | 1763 | F7P | M | +/- | | ▸ 02/96 | 7700789732 | 698007 | |
| 1.8 i | 357/E/V, B57/C/U, C57/9/C/H/U | E | 1794 | F3P | M | - | | 09/90 ▸ 02/98 | 7700828623 | 698004 | |
| 1.8 i | 557U | E | 1794 | F3P | M | - | | 12/96 ▸ 02/98 | 7700818904 | 698086 | |
| 1.8 i | 357/A/D/U, B578, C578, 557/D/U | E | 1794 | F3P | A | - | | 01/94 ▸ 02/98 | 7700818904 | 698086 | |
| 2.0 i | C57M | E | 1998 | F7R | M | +/- | | 05/93 ▸ 02/96 | 7700789732 | 698007 | |
| 1.9 D | S57/I/L | D | 1870 | F8Q | M | +/- | | 03/96 ▸ 02/98 | 7700828623 | 698004 | |
| 1.9 D | S57/6/I/L | D | 1870 | F8Q | M | - | | 09/90 ▸ 02/96 | 7700828623 | 698004 | |
| **CLIO II (98>2001)** | | | | | | | | | | | |
| 1.2 i | BB0/A/B/F, SB0A, CB0/A/B/F | E | 1149 | D7F | M | - | | 03/98 ▸ 03/01 | 7701043979 | | |
| 1.4 i | BB0/C/S, CB0/C/S | E | 1390 | E7J | M | - | | 03/98 ▸ 03/01 | 7701043979 | | |
| 1.4 i 16V | BB0L, CB0L | E | 1390 | K4J | M | - | | 09/99 ▸ 03/01 | 7701050678 | | |
| 1.4 i 16V | BB0L, CB0L | E | 1390 | K4J | M | - | | 09/99 ▸ 03/01 | 7701043977 | | |
| 1.4 i | LB03 | E | 1390 | K7J | M | | | 12/99 ▸ 03/01 | 7701043977 | | |
| 1.4 i | LB03 | E | 1390 | K7J | M | | | 12/99 ▸ 03/01 | 7701050678 | | |
| 1.4 i,1.4 i 16V | BB0/L/S, CB0/L/S | E | 1390 | E7J,K4J | A | - | | 10/98 ▸ 03/01 | 7701045215 | 698356 | |
| 1.6 i,1.6 i 16V | BB0/D, CB0/D/T | E | 1598 | K4M,K7M | M | - | | 03/98 ▸ 03/01 | 7701043977 | | |
| 1.6 i,1.6 i 16V | BB0/D, CB0/D/T | E | 1598 | K4M,K7M | M | - | | 03/98 ▸ 03/01 | 7701050678 | | |
| 1.6 i | BB0D, CB0D | E | 1598 | K7M | A | - | | 03/98 ▸ 03/01 | 7701045215 | 698356 | |
| 1.9 dTi | BB0U, CB0U | D | 1870 | F9Q | M | - | | 11/99 ▸ 03/01 | 7701050678 | | |
| 1.9 dTi | BB0U, CB0U | D | 1870 | F9Q | M | - | | 11/99 ▸ 03/01 | 7701043977 | | |
| **CLIO II (2001>)** | | | | | | | | | | | |
| 1.2 i,1.2 i 16V | BB0/5/F, CB0/5/F | E | 1149 | D4F,D7F | M | | | 04/01 ▸ 07/06 | 7701050677 | 698302 | |
| 1.6 i 16V | BB1D, CB1D | E | 1598 | K4M | M | | | 04/01 ▸ 12/04 | 7701050678 | | |
| 1.5 dCi | BB0/7/8, CB0/7/8 | D | 1461 | K9K | M | | | 04/01 ▸ 04/05 | 7701050677 | 698302 | |
| **ESPACE III (96>2000)** | | | | | | | | | | | |
| 2.0 i,2.0 i 16V | JE0/A/N | E | 1998 | F3R,F4R | M | | | 10/96 ▸ 06/00 | 7701035695 | 698085 | |
| 2.0 i | JE0A | E | 1998 | F3R | A | | | 10/96 ▸ 06/00 | 7701035695 | 698085 | |
| **LAGUNA (94>98)** | | | | | | | | | | | |
| 1.8 i | B56/0/A/B/S/T/Z | E | 1794 | F3P | M | | | 01/94 ▸ 04/98 | 7701038405 | 698084 | |
| 2.0 i 16V | B56/D/M | E | 1948 | N7Q | M | | C | 05/95 ▸ 04/98 | 7701035695 | 698085 | |
| 2.0 i | B56/C/H/L | E | 1998 | F3R | M | | | 01/94 ▸ 04/98 | 7701038405 | 698084 | |
| 2.0 i | B56/C/H/L | E | 1998 | F3R | A | | C | 01/94 ▸ 04/98 | 7701035695 | 698085 | |
| **LAGUNA (98>2000)** | | | | | | | | | | | |
| 1.8 i GPL | B560 | G | 1794 | F3P | M | | | 05/98 ▸ 12/00 | 7701038405 | 698084 | |
| 1.6 i 16V | | E | 1598 | K4M | M | | | 05/98 ▸ 12/00 | 7701038405 | 698084 | |
| 1.8 i 16V | B56/3/4/Y | E | 1783 | F4P | M | | | 09/98 ▸ 12/00 | 7701038405 | 698084 | |

# RENAULT (.../...)

## LAGUNA (98>2000) (.../...)

| | | | CC | | | AC | | | OE | Valeo |
|---|---|---|---|---|---|---|---|---|---|---|
| 1.8 i | B560 | E | 1794 | F3P | M | | | 09/99 ▸ 12/00 | 7701038405 | 698084 |
| 2.0 i 16V | B56M | E | 1948 | N7Q | M | | | 05/98 ▸ 12/00 | 7701035695 | 698085 |
| 2.0 i | B56L | E | 1998 | F3R | M | | | 05/98 ▸ 12/00 | 7701038405 | 698084 |
| 2.0 i | B56/L/U | E | 1998 | F3R | A | | | 05/98 ▸ 12/00 | 7701035695 | 698085 |

## LAGUNA NEVADA (95>98)

| | | | | | | | | | | |
|---|---|---|---|---|---|---|---|---|---|---|
| 1.8 i | K56/0/S/T/Z | E | 1794 | F3P | M | - | | 07/95 ▸ 04/98 | 7701035695 | 698085 |
| 2.0 i 16V | K56/D/M | E | 1948 | N7Q | M | - | | 07/95 ▸ 04/98 | 7701035695 | 698085 |
| 2.0 i | K56/C/H/L | E | 1998 | F3R | M | - | | 07/95 ▸ 04/98 | 7701035695 | 698085 |
| 2.0 i | K56/C/H/L | E | 1998 | F3R | A | - | | 07/95 ▸ 04/98 | 7701035695 | 698085 |

## LAGUNA NEVADA (98>2000)

| | | | | | | | | | | |
|---|---|---|---|---|---|---|---|---|---|---|
| 1.8 i GPL | K560 | G | 1794 | F3P | M | - | | 05/98 ▸ 12/00 | 7701035695 | 698085 |
| 1.6 i 16V | K56/1/8 | E | 1598 | K4M | M | - | | 05/98 ▸ 12/00 | 7701035695 | 698085 |
| 1.8 i 16V | K56/3/4/Y | E | 1783 | F4P | M | - | | 05/98 ▸ 12/00 | 7701035695 | 698085 |
| 1.8 i | K560 | E | 1794 | F3P | M | - | | 05/99 ▸ 12/00 | 7701035695 | 698085 |
| 2.0 i 16V | K56M | E | 1948 | N7Q | M | - | | 05/98 ▸ 12/00 | 7701035695 | 698085 |
| 2.0 i | K56L | E | 1998 | F3R | M | - | | 05/98 ▸ 12/00 | 7701035695 | 698085 |
| 2.0 i | K56L | E | 1998 | F3R | A | - | | 05/98 ▸ 12/00 | 7701035695 | 698085 |

## LUTECIA (JAP)

| | | | | | | | | | | |
|---|---|---|---|---|---|---|---|---|---|---|
| 1.4 i | B57B | E | 1390 | E7J | M | - | | 03/96 ▸ 02/98 | 7700828623 | 698004 |
| 1.8 i | 357A, 557A | E | 1794 | F3P | A | - | | 10/94 ▸ 02/98 | 7700818904 | 698086 |

## MEGANE (95>99)

| | | | | | | | | | | |
|---|---|---|---|---|---|---|---|---|---|---|
| 1.6 i | DA0F | E | 1598 | K7M | M | - | | 07/97 ▸ 02/99 | 7701038405 | 698084 |
| 1.6 i | DA0F | E | 1598 | K7M | A | - | | 11/95 ▸ 02/99 | 7701035695 | 698085 |
| 2.0 i ▸ 970110 | DA0G | E | 1998 | F3R | M | - | | 11/95 ▸ 01/97 | 7701035695 | 698085 |
| 2.0 i ▸ 970110 | DA0G | E | 1998 | F3R | A | - | | 11/95 ▸ 02/99 | 7701035695 | 698085 |
| 2.0 i,2.0 i 16V ▸ 980918 | DA0/G/H | E | 1998 | F3R,F7R | M | - | | 11/95 ▸ 09/98 | 7701038405 | 698084 |
| 1.9 dTi | DA0N | D | 1870 | F9Q | M | - | | 11/95 ▸ 09/98 | 7701038405 | 698084 |
| 1.9 dTi | DA0N | D | 1870 | F9Q | A | - | | 11/95 ▸ 06/97 | 7701038405 | 698084 |

## MEGANE (98>2003)

| | | | | | | | | | | |
|---|---|---|---|---|---|---|---|---|---|---|
| 1.4 i,1.4 i 16V | BA0/D/V/W, BA1/0/H DA0/D/W, DA1/0/H, EA1H, EA0/D/W, KA0/D/V/W KA1/0/H | E | 1390 | E7J,K4J | M | - | | 10/98 ▸ 02/03 | 7701038405 | 698084 |
| 1.6 i,1.6 i 16V | BA0/0/4/B/F, DA04 EA04, BA1/1/C/J/K, KA0/4/F | E | 1598 | K4M,K7M | M | - | | 10/98 ▸ 02/03 | 7701038405 | 698084 |
| 1.6 i 16V | EA04 | E | 1598 | K4M | M | - | | 02/99 ▸ 02/01 | 7701035695 | 698085 |
| 1.6 i,1.6 i 16V | BA0/4/B/F, DA04 KA04, BA1/1/J | E | 1598 | K4M,K7M | A | - | | 10/98 ▸ 02/03 | 7701035695 | 698085 |
| 1.9 dTi | DA0N | D | 1870 | F9Q | M | - | | 02/99 ▸ 12/00 | 7701035695 | 698085 |
| 1.9 dCi,1.9 dTi | DA0N, KA0N, BA0/5/N | D | 1870 | F9Q | A | - | | 10/98 ▸ 02/03 | 7701035695 | 698085 |

## MEGANE CLASSIC (96>99)

| | | | | | | | | | | |
|---|---|---|---|---|---|---|---|---|---|---|
| 1.4 i | LA0/E/V | E | 1390 | E7J | M | - | | 09/96 ▸ 02/99 | 7701038405 | 698084 |
| 1.6 e | LA1C, LA0/F/L/S | E | 1598 | K7M | M | - | | 09/96 ▸ 02/99 | 7701038405 | 698084 |
| 1.6 e | LA0F | E | 1598 | K7M | A | - | | 09/96 ▸ 02/99 | 7701038405 | 698084 |
| 2.0 i ▸ 970110 | LA0/7/G | E | 1998 | F3R | M | - | | 09/96 ▸ 01/97 | 7701035695 | 698085 |
| 2.0 i ▸ 970110 | LA0/7/G | E | 1998 | F3R | A | - | | 09/96 ▸ 01/97 | 7701035695 | 698085 |
| 2.0 i 970110 ▸ 980918 | LA0/7/G | E | 1998 | F3R | M | - | | 01/97 ▸ 09/98 | 7701038405 | 698084 |
| 2.0 i 970110 ▸ 980918 | LA0/7/G | E | 1998 | F3R | A | - | | 01/97 ▸ 09/98 | 7701038405 | 698084 |
| 1.9 dTi | LA0N | D | 1870 | F9Q | A | - | | 04/97 ▸ 02/99 | 7701035695 | 698085 |
| 1.9 dTi | LA1U, LA0/8/N | D | 1870 | F9Q | M | - | | 04/97 ▸ 09/98 | 7701038405 | 698084 |

## MEGANE CLASSIC (99>2002)

| | | | | | | | | | | |
|---|---|---|---|---|---|---|---|---|---|---|
| 1.4 i,1.4 i 16V | LA10, LA0/D/V/W | E | 1390 | E7J,K4J | M | - | | 03/99 ▸ 08/02 | 7701038405 | 698084 |
| 1.6 i 16V | LA0/0/4/B, LA1/1/J/K | E | 1598 | K4M | M | - | | 03/99 ▸ 08/02 | 7701038405 | 698084 |
| 1.6 i 16V | LA0/4/B, LA1/1/J | E | 1598 | K4M | A | - | | 03/99 ▸ 08/02 | 7701038405 | 698084 |

## MEGANE SCENIC (96>99)

| | | | | | | | | | | |
|---|---|---|---|---|---|---|---|---|---|---|
| 1.4 i,1.4 i 16V | JA0/E/W | E | 1390 | E7J,K4J | M | - | | 06/97 ▸ 09/99 | 7701038405 | 698084 |

Fan Motor Moteur de ventilateur Lüftermotor Motoventole Ventilatormotor Fan motoru Motor del ventilador Motor вентилятора Ventilátor motor Motor sahary Ventilator motor Μοτέρ ανεμιστήρων



• **New** Nouveau **Nuevo** Novo **Nuovo** Nieuw **Neu** Nowość **Yeni** Новый Νέο **Nový**

| Type Ctr. | | CC | | AC | | | OE | Valeo | |
|---|---|---|---|---|---|---|---|---|---|

# RENAULT (.../...)

## MEGANE SCENIC (96>99) (.../...)

| | | | | | | | | | | | |
|---|---|---|---|---|---|---|---|---|---|---|---|
| 1.4 i ▸ 970620 | JA0E | E | 1390 | E7J | M | - | | 10/96 ▸ 06/97 | 7701035695 | 698085 | |
| 1.6 i | JA0/F/L | E | 1598 | K7M | M | - | | 10/96 ▸ 09/97 | 7701035695 | 698085 | |
| 1.6 i | JA0/F/L | E | 1598 | K7M | M | - | | 09/97 ▸ 09/99 | 7701038405 | 698084 | |
| 1.6 i | JA0F | E | 1598 | K7M | A | - | | 10/96 ▸ 09/97 | 7701035695 | 698085 | |
| 1.6 i | JA0F | E | 1598 | K7M | A | - | | 09/97 ▸ 09/99 | 7701038405 | 698084 | |
| 2.0 i ▸ 980818 | JA0G | E | 1998 | F3R | M | - | | 10/96 ▸ 09/99 | 7701035695 | 698085 | |
| 2.0 i | JA0G | E | 1998 | F3R | M | - | | 04/97 ▸ 09/98 | 7701038405 | 698084 | |
| 2.0 i | JA0G | E | 1998 | F3R | A | - | | 10/96 ▸ 09/99 | 7701035695 | 698085 | |
| 2.0 i | JA0G | E | 1998 | F3R | A | - | | 04/97 ▸ 09/98 | 7701038405 | 698084 | |
| 1.9 dTi ▸ 970910 | JA0N | D | 1870 | F9Q | M | - | | 09/97 ▸ 09/99 | 7701038405 | 698084 | |
| 1.9 dTi | JA0N | D | 1870 | F9Q | M | - | | 04/97 ▸ 09/97 | 7701035695 | 698085 | |

## SAFRANE

| | | | | | | | | | | | |
|---|---|---|---|---|---|---|---|---|---|---|---|
| 2.0 i 16V | B54L | E | 1948 | N7Q | M | | | 09/96 ▸ 11/00 | 7701035695 | 698085 | |
| 2.0 Si,2.0 i | B54/0/2 | E | 1995 | J7R | M | - | | 05/92 ▸ 09/96 | 7701037010 | | |
| 2.0 Si | B542 | E | 1995 | J7R | A | - | | 05/92 ▸ 09/96 | 7701037010 | | |
| 2.2 Si,2.2 i | B54/1/3 | E | 2165 | J7T | M | | C | 05/92 ▸ 09/96 | 7701035695 | 698085 | |
| 2.2 Si,2.2 i | B54/1/3 | E | 2165 | J7T | A | | | 05/92 ▸ 09/96 | 7701035695 | 698085 | |

## TWINGO I (93>98)

| | | | | | | | | | | | |
|---|---|---|---|---|---|---|---|---|---|---|---|
| 1.2 i | S066, C06/6/7 | E | 1149 | D7F | M | - | | 07/96 ▸ 08/98 | 7701042440 | 698317 | |
| 1.2 i | S066, C06/6/7 | E | 1149 | D7F | A | - | | 07/96 ▸ 08/98 | 7701042441 | | |
| 1.2 | C06/3/4, S06/3/4 | E | 1239 | C3G | M | - | | 03/93 ▸ 01/97 | 7701036722 | 698015 | |

## TWINGO II (98>2007)

| | | | | | | | | | | | |
|---|---|---|---|---|---|---|---|---|---|---|---|
| 1.2 i GPL | C066, S066 | G | 1149 | D7F | M | - | | 10/98 ▸ 08/04 | 7701042440 | 698317 | |
| 1.2 i,1.2 i 16V | C06/6/8/C/D/G/K, S06 6/8/C/K | E | 1149 | D4F,D7F | M | - | | 09/98 ▸ 08/04 | 7701042440 | 698317 | |
| 1.2 i 16V | C06/D/K, S06/C/K | E | 1149 | D4F | M | - | | 10/00 ▸ 08/04 | 7701042441 | | |
| 1.2 i | C066 | E | 1149 | D7F | A | - | | 09/98 ▸ 08/04 | 7701042441 | | |

# RENAULT

## EXPRESS (85>91)

| | | | | | | | | | | | |
|---|---|---|---|---|---|---|---|---|---|---|---|
| 1.0 | F400 | E | 956 | C1C | M | | | 09/85 ▸ 08/91 | 7700828623 | 698004 | |
| 1.1 | F40/1/H | E | 1108 | C1E | M | | | 09/85 ▸ 08/91 | 7700828623 | 698004 | |
| 1.4,1.4 i | F40/2/7/M | E | 1397 | C1J,C2J,C3J | M | | | 09/85 ▸ 08/91 | 7700828623 | 698004 | |
| 1.6 D | F404 | D | 1595 | F8M | M | | | 09/85 ▸ 08/91 | 7700789732 | 698007 | |

## EXPRESS (91>2003)

| | | | | | | | | | | | |
|---|---|---|---|---|---|---|---|---|---|---|---|
| 1.1 | F40/1/T | E | 1108 | C1E | M | | | 09/91 ▸ 08/97 | 7700828624 | 698005 | |
| 1.2 | F40F | E | 1237 | C1G | M | | | 09/91 ▸ 08/94 | 7700828624 | 698005 | |
| 1.2 i | F406 | E | 1239 | C3G | M | | | 07/93 ▸ 08/97 | 7700828624 | 698005 | |
| 1.4,1.4 i | F40/A/D/S/U/V/Y | E | 1390 | E6J,E7J | M | | | 09/91 ▸ 08/97 | 7700828624 | 698005 | |
| 1.4 i | F40/S/U | E | 1390 | E7J | A | | | 09/91 ▸ 08/97 | 7700828624 | 698005 | |
| 1.4 i | F407 | E | 1397 | C3J | M | | | 09/91 ▸ 08/94 | 7700828624 | 698005 | |
| 1.6 D | F404 | D | 1595 | F8M | M | - | | 09/91 ▸ 08/94 | 7700789732 | 698007 | |

## EXTRA (85>91)

| | | | | | | | | | | | |
|---|---|---|---|---|---|---|---|---|---|---|---|
| 1.0 | F400 | E | 956 | C1C | M | | | 09/85 ▸ 08/91 | 7700828623 | 698004 | |
| 1.1 | F401 | E | 1108 | C1E | M | | | 09/85 ▸ 08/91 | 7700828623 | 698004 | |
| 1.4 | F402 | E | 1397 | C1J | M | | | 09/85 ▸ 08/91 | 7700828623 | 698004 | |
| 1.6 D | F404 | D | 1595 | F8M | M | | | 09/85 ▸ 08/91 | 7700789732 | 698007 | |

## EXTRA (91>97)

| | | | | | | | | | | | |
|---|---|---|---|---|---|---|---|---|---|---|---|
| 1.2 | F40F | E | 1237 | C1G | M | - | | 09/91 ▸ 08/94 | 7700828624 | 698005 | |
| 1.2 i | F406 | E | 1239 | C3G | M | - | | 09/94 ▸ 08/97 | 7700828624 | 698005 | |
| 1.4,1.4 i | F40/A/U | E | 1390 | E6J,E7J | M | - | | 09/91 ▸ 08/97 | 7700828624 | 698005 | |
| 1.6 D | F404 | D | 1595 | F8M | M | | | 09/91 ▸ 08/94 | 7700789732 | 698007 | |

## KANGOO (97>2003)

| | | | | | | | | | | | |
|---|---|---|---|---|---|---|---|---|---|---|---|
| 1.2 i | FC0A, KC0A | E | 1149 | D7F | M | - | | 09/97 ▸ 02/03 | 7701050678 | | |
| 1.2 i | FC0A, KC0A | E | 1149 | D7F | M | - | | 09/97 ▸ | 7701043977 | | |
| 1.4 i | FC0/C/H, KC0/C/H | E | 1390 | E7J | M | - | | 09/97 ▸ | 7701043977 | | |
| 1.4 i | FC0/C/H, KC0/C/H | E | 1390 | E7J | M | - | | 09/97 ▸ 02/03 | 7701050678 | | |
| 1.4 i | KC0H | E | 1390 | E7J | A | - | | 10/99 ▸ 02/03 | 7701045215 | 698356 | |

# RENAULT (.../...)

| Type Ctr. | | CC | | AC | | | OE | Valeo | |
|---|---|---|---|---|---|---|---|---|---|
| **KANGOO (97>2003) (.../...)** | | | | | | | | | |
| 1.4 i FC0C | E | 1390 | E7J | M | - | | 01/98 ▸ 06/98 | 7701045215 | **698356** |
| **KANGOO (2003>2009)** | | | | | | | | | |
| 1.2 i GPL FC0A, KC0A | G | 1149 | D7F | M | - | | 03/03 ▸ 09/07 | 7701050678 | |
| 1.2 i FC0/A, KC0/A/K | E | 1149 | D7F | M | - | | 03/03 ▸ 12/05 | 7701050678 | |
| **MASTER (80>89)** | | | | | | | | | |
| 2.0 FB30, FC30 870115 ▸ | E | 1995 | J5R | M | | | 01/87 ▸ 02/89 | 7700828623 | **698004** |
| 2.0 FB30, FC30 870115 ▸ | E | 1995 | J5R | M | | | 01/87 ▸ 02/89 | 7701203194 | |
| 2.0 FB30, FC30 ▸ 870115 | E | 1995 | J5R | M | | | 07/83 ▸ 01/87 | 7700789732 | **698007** |
| 2.1 D FB30 | D | 2068 | J8S | M | | | 08/80 ▸ 02/89 | 7700828623 | **698004** |
| 2.1 D FB30 | D | 2068 | J8S | M | | | 08/80 ▸ 02/89 | 7701203194 | |
| 2.4 D FB30, FC30 | D | 2499 | S8U | M | | | 08/80 ▸ 02/89 | 7700828623 | **698004** |
| 2.4 D FB30, FC30 | D | 2499 | S8U | M | | | 08/80 ▸ 02/89 | 7701203194 | |
| **MASTER (89>94)** | | | | | | | | | |
| 2.0 QH92, QJ72, QJ92, R8D2, RC92, RF12, RH12 RH52, RH92, RJ12, RJ22, RJ52, RJ92, RL92 QH7/2 | E | 1995 | J5R | M | | | 03/89 ▸ 09/94 | 7701203194 | |
| 2.1 D RF13 | D | 2068 | J8S | M | | | 03/89 ▸ 09/94 | 7701203194 | |
| 2.5 D,2.5 TD QH94, QHA4, QJ74 QJ94, QH7/4, R8D/5/6, RH1/5/6, RH5/5/6, RH9 5/6, RJ1/5/6, RJ2/5/6, RJ5/5/6, RJ9/5/6 | D | 2499 | S8U,S9U | M | | | 03/89 ▸ 09/94 | 7701203194 | |
| **MASTER (94>97)** | | | | | | | | | |
| 2.2 i RC7E, RC9E, RD9E, RF1E, RH1E, RH2E, RH5E RH9E, RJ1E, RJ2E, RJ5E, RJ9E, RL7E, RL9E R8D/E | E | 2165 | J7T | M | | | 10/94 ▸ 09/97 | 7701203194 | |
| 2.5 D,2.5 TD R8D/G, RC7/G/H, RC9 G/H/J, RD8/H/J, RF1G, RD9/G/H, RH1/G/H/J RH2/G/H, RH5/G/H, RH9/G/H/J, RJ1/G/H/J, RJ2 G/H/J, RJ5/G/H/J, RJ9/G/H/J, RL7/H/J, RL9/G H/J | D | 2499 | S8U,S9U | M | | | 10/94 ▸ 09/97 | 7701203194 | |
| **RAPID (85>91)** | | | | | | | | | |
| 1.0 F400 | E | 956 | C1C | M | | | 09/85 ▸ 08/91 | 7700828623 | **698004** |
| 1.1 F40/1/H | E | 1108 | C1E | M | | | 09/85 ▸ 08/91 | 7700828623 | **698004** |
| 1.4 i F407 | E | 1390 | C3J | M | | | 07/90 ▸ 08/91 | 7700828623 | **698004** |
| 1.4,1.4 i F40/2/7 | E | 1397 | C1J,C3J | M | | | 09/85 ▸ 08/91 | 7700828623 | **698004** |
| 1.6 D F404 | D | 1595 | F8M | M | | | 09/85 ▸ 08/91 | 7700789732 | **698007** |
| **RAPID II (91>98)** | | | | | | | | | |
| 1.4 i F40/D/U/V | E | 1390 | E7J | M | - | | 09/91 ▸ 03/98 | 7700828624 | **698005** |
| **TRAFIC (89>94)** | | | | | | | | | |
| 1.4 T110, T120 | E | 1397 | C1J | M | - | | 03/89 ▸ 06/91 | 7700789732 | **698007** |
| 1.7 P358, T118, T128, T2B8, T318, T328, T358 T418, T428, T558, T5B8, P31/8 | E | 1721 | F1N | M | - | | 03/89 ▸ 09/94 | 7700789732 | **698007** |
| 2.0 PC92, PCG2, T2B2, T552, T7B2, TB12, TB22 TB42, TB52, TB62, TB92, TE92, V312, V412 V422, V492, V5B2, PC8/2 | E | 1995 | J5R | M | - | | 03/89 ▸ 09/94 | 7701029940 | |
| 2.2 T35A, T5BA, T7BA, T7CA, TB1A, TB2A, TB6A TB9A, TC9A, TE1A, TE2A, TE9A, V31A, V41A V42A, V49A, V5BA, T31/A | E | 2165 | J7T | M | - | | 03/89 ▸ 09/94 | 7701029940 | |
| 2.1 D PC93, PCG3, T113, T123, T2B3, T313, T323 T333, T353, T413, T423, T433, T553, T5B3 T7B3, TB13, TB23, TB33, TB43, TB53, TB63 TB93, V313, V423, V5B3, PC8/3 | D | 2068 | 852,J8S | M | - | | 03/89 ▸ 09/94 | 7701029940 | |
| 2.5 D T2B/4, T41/4/B, T434, T554, T42/4/B, T7B/4/B TB1/4/B, TB34, TB44, TB54, TB64, TB2/4/B TC94, TB9/4/B, V31/4/B, V42/4/B, V49/4/B V5B/4/B | D | 2499 | S8U | M | - | | 03/89 ▸ 09/94 | 7701029940 | |
| **TRAFIC (94>97)** | | | | | | | | | |
| 2.1 D PC9F, PCGF, T11F, T12F, T2BF, T31F, T32F T33F, T35F, T41F, T42F, T43F, T55F, T5BF TMBF, PC8/F | D | 2068 | J8S | M | - | | 10/94 ▸ 08/97 | 7701029940 | |

Fan Motor Moteur de ventilateur Lüftermotor Motoventole Ventilatormotor Fan motoru
Motor del ventilador Motor вентилятора Ventilátor motor Motor sahary Ventilator motor Motér ανεμιστήρων



• **New** Nouveau **Nuevo** Novo **Nuovo** Nieuw **Neu** Nowość **Yeni** Новый Νέο **Novy**

| Type Ctr. | | CC | | AC | | | OE | Valeo | |
|---|---|---|---|---|---|---|---|---|---|
| **RENAULT (.../...)** | | | | | | | | | |
| **TRAFIC (94>97) (.../...)** | | | | | | | | | |
| 2.5 D TB1G, TB2G, TB3G, TB4G, TB5G, TB6G, TB9G TC7G, TC9G, TG1G, TH1G, TJ1G, V31G, V42G V49G, V5BG, T55/G | D | 2499 | S8U | M | - | | 10/94 ▸ 08/97 | 7701029940 | |
| **TRAFIC (97>2001)** | | | | | | | | | |
| 2.5 D T7BG, TB2G, TB9G, TC9M, T55/G/M, TCJ/G/M TF1/G/M, TF2/G/M, TF3/G/M, V31/G/M, V5B/G/M | D | 2499 | S8U | M | | | 09/97 ▸ 03/01 | 7701029940 | |
| **ROVER** | | | | | | | | | |
| **45 (2000>2004)** | | | | | | | | | |
| 1.4 i 16V RTC/L/W, RTM/L/W RTS/L/W, RTZ/L/W | E | 1396 | 14K4F4 | M | + | | 01/00 ▸ 05/04 | | **698669** |
| 1.6 i 16V RTC/L/W, RTS/L/W RTZ/L/W | E | 1589 | 16K4F4 | M | + | | 01/00 ▸ 05/04 | | **698669** |
| 1.8 i 16V RTC/L/W, RTS/L/W RTZ/L/W | E | 1796 | 18K4F | M | + | | 01/00 ▸ 05/04 | | **698669** |
| 1.8 i 16V RTC/L/W, RTS/L/W RTZ/L/W | E | 1796 | 18K4F | A | + | | 01/00 ▸ 05/04 | | **698669** |
| 2.0 i V6 24V RTC/L/W, RTZ/L/W | E | 1997 | 20K6F | M | + | | 01/00 ▸ 05/04 | | **698669** |
| 2.0 i V6 24V RTC/L/W, RTZ/L/W | E | 1997 | 20K6F | A | + | | 01/00 ▸ 05/04 | | **698669** |
| 2.0 iDT RTC/L/W, RTM/L/W RTS/L/W, RTZ/L/W | D | 1996 | 20T2N | M | + | | 01/00 ▸ 05/04 | | **698669** |
| **400 (95>)** | | | | | | | | | |
| 414 RTH/W, RTM/L/W | E | 1396 | 14K4F4 | M | | | 05/95 ▸ 03/00 | | **698669** |
| 416 RTMW, RTSL, RTC/W | E | 1589 | 16K4F4 | M | | | 05/95 ▸ 03/00 | | **698669** |
| 420 RTMW, RTSW, RTZW, RTC/L/W | E | 1994 | 20T4H | M | | | 11/95 ▸ 03/00 | | **698669** |
| 420 RTMW, RTSW, RTZW, RTC/W | D | 1994 | 20T2N,20T2R | M | | | 11/95 ▸ 03/00 | | **698669** |

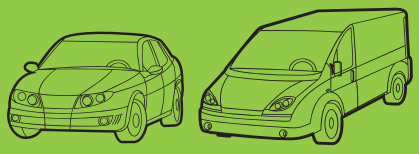

Valeo

Pour / For

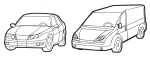


| | | | |
|---|---|---|---|
| ABARTH | 558 | MINI | 577 |
| ALFA ROMEO | 558 | NISSAN | 577 |
| AUDI | 559 | OPEL | 577 |
| BMW | 563 | PEUGEOT | 579 |
| CHRYSLER | 564 | PORSCHE | 582 |
| CITROEN | 565 | RENAULT | 582 |
| FIAT | 567 | RENAULT VEHICULES INDUSTRIELS | 586 |
| FORD | 570 | SAAB | 586 |
| IVECO | 572 | SEAT | 587 |
| JAGUAR | 572 | SKODA | 589 |
| LANCIA | 572 | TOYOTA | 591 |
| LAND ROVER | 573 | VAUXHALL | 591 |
| MCC | 573 | VOLKSWAGEN | 592 |
| MERCEDES | 574 | VOLVO | 600 |


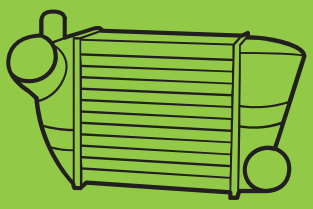

Charge Air Cooler
Refroidisseur d'air
de suralimentation
Ladeluftkühler
Intercooler
Intercooler
Turbo Radyatörü
Intercooler
Охладитель всасываемого воздуха
töltőlevegő hűtő
Intercooler
Intercooler
Intercooler

| Type Ctr. | | CC | | AC | | | OE | Valeo | DIM. | TECH |
|---|---|---|---|---|---|---|---|---|---|---|
| **ABARTH** | | | | | | | | | | |
| **GRANDE PUNTO** | | | | | | | | | | |
| 1.4 T-Jet 155 16V | E | 1368 | 199A8.000 | M | | | 09/07 ▸ | 51783791 | **818824** | 572 132 ALB |
| **ALFA ROMEO** | | | | | | | | | | |
| **145** | | | | | | | | | | |
| 1.9 JTD 930A4 | D | 1910 | AR32302 | M | | | 03/99 ▸ 06/01 | 60809353 | | 295 202 ALB |
| 1.9 JTD 930A4 | D | 1910 | AR32302 | M | | | 03/99 ▸ 06/01 | 7626413 | | 295 202 ALB |
| 1.9 TD 930A4 | D | 1929 | AR33601,AR67501 | M | | | 09/94 ▸ 03/99 | 60809353 | | 295 202 ALB |
| 1.9 TD 930A4 | D | 1929 | AR33601,AR67501 | M | | | 09/94 ▸ 03/99 | 7626413 | | 295 202 ALB |
| **146** | | | | | | | | | | |
| 1.9 JTD 930B4 | D | 1910 | AR32302 | M | | | 03/99 ▸ 06/01 | 7626413 | | 295 202 ALB |
| 1.9 TDs 930B4 | D | 1929 | AR67501 | M | | | 12/94 ▸ 06/01 | 7626413 | | 295 202 ALB |
| **147 (2000>2004)** | | | | | | | | | | |
| 2.0 i Twin Spark 16V 937/AX/BX | E | 1970 | AR32310 | M | | | 10/00 ▸ 09/04 | 51715999 | **817862** | 240 172 ALB |
| 1.9 JTD 937AX | D | 1910 | 937A2.000 | M | | Left/gauche | 10/00 ▸ | 46744880 | **817862** | 240 172 ALB |
| 1.9 JTD,1.9 JTD 16V 937/AX/BX | D | 1910 | 182B9.000,192B1.000,937A2.000 937A4.000 | M | | | 10/00 ▸ 09/04 | 51715999 | **817862** | 240 172 ALB |
| **147 (2004>)** | | | | | | | | | | |
| 1.9 JTD,1.9 JTD 16V,1.9 JTDM 937/AX/BX | D | 1910 | 182B9.000,192A5.000,192B1.000 937A2.000,937A3.000,937A4.000 937A5.000,939A7.000 | M | | | 10/04 ▸ 01/10 | 51715999 | **817862** | 240 172 ALB |
| **155** | | | | | | | | | | |
| 1.9 TD 167A3 | D | 1929 | AR33601,AR67501 | M | | | 07/93 ▸ 08/97 | 7626413 | | 295 202 ALB |
| **156 (97>2003)** | | | | | | | | | | |
| 1.9 JTD,1.9 JTD 16V 932/A/A2/AX/B2/BX | D | 1910 | 192B1.000,937A2.000,AR32302 AR37101 | M | | | 09/97 ▸ | 0060619007 | **817861** | 240 202 ALB |
| 1.9 JTD,1.9 JTD 16V 932/A/A2/AX/B2/BX | D | 1910 | 192B1.000,937A2.000,AR32302 AR37101 | M | | | 09/97 ▸ 03/03 | 60686738 | **817861** | 240 202 ALB |
| 2.4 JTD,2.4 JTD 10V 932/A/A1/AX/B1/BX | D | 2387 | 839A6.000,841C.000,AR32501 | M | | | 09/97 ▸ | 0060619007 | **817861** | 240 202 ALB |
| 2.4 JTD,2.4 JTD 10V 932/A/A1/AX/B1/BX | D | 2387 | 839A6.000,841C.000,AR32501 | M | | | 09/97 ▸ 03/03 | 60686738 | **817861** | 240 202 ALB |
| **156 (2003>2007)** | | | | | | | | | | |
| 1.9 JTD,1.9 JTD 16V 932/A2/AX/B2/BX | D | 1910 | 192A5.000,192B1.000,937A2.000 937A4.000,937A5.000 | M | | | 04/03 ▸ 06/07 | 60686738 | **817861** | 240 202 ALB |
| 1.9 JTD,1.9 JTD 16V 932/A2/AX/B2/BX | D | 1910 | 192A5.000,937A2.000,937A4.000 | M | | | 04/03 ▸ | 0060619007 | **817861** | 240 202 ALB |
| 2.4 JTD 10V,2.4 JTD 20V 932/AX/BX | D | 2387 | 841C.000,841G.000,841M.000 | M | | | 04/03 ▸ 01/06 | 60686738 | **817861** | 240 202 ALB |
| 2.4 JTD 10V,2.4 JTD 20V 932/AX/BX | D | 2387 | 841C.000,841G.000 | M | | | 04/03 ▸ | 0060619007 | **817861** | 240 202 ALB |
| **159 (2005>2008)** | | | | | | | | | | |
| 1.9 JTDM 16V,1.9 JTDM 8V 939/AX/BX | D | 1910 | 939A1.000,939A2.000,939A7.000 939A8.000 | M | | | 07/05 ▸ 02/08 | 60692222 | **818794** | 603 443 ALB |
| 1.9 JTDM 16V 939/AX/BX | D | 1910 | 939A2.000,939A8.000 | A | | | 07/05 ▸ | 60692222 | **818794** | 603 443 ALB |
| **166 (98>2003)** | | | | | | | | | | |
| 2.4 JTD 936A2 | D | 2387 | 839A6.000 | M | | Right/Droite | 10/98 ▸ | 60809353 | | 295 202 ALB |
| **BRERA** | | | | | | | | | | |
| 2.4 JTDM 20V 939DX | D | 2387 | 939A3.000 | M | | | 01/06 ▸ 10/10 | 60692222 | **818794** | 603 443 ALB |
| **GT** | | | | | | | | | | |
| 1.9 JTD 16V 937CX | D | 1910 | 937A5.000 | M | | | 09/03 ▸ 11/06 | 51715999 | **817862** | 240 172 ALB |
| **MITO** | | | | | | | | | | |
| 1.4 TB 150 16V,1.4 TB 155 16V 1.4 TB 16V 145AX ; 955AX | E | 1368 | 198A1.000,199A8.000 | M | | | 04/08 ▸ | 51783791 | **818824** | 572 132 ALB |
| 1.6 MJTD 115 16V 1.6 MJTD 120 16V,1.6 MJTD 16V 145AX ; 955AX | D | 1598 | 198A2.000/F,955A4.000 | M | | | 04/08 ▸ | 51783791 | **818824** | 572 132 ALB |

Charge Air Cooler Refroidisseur d'air de suralimentation Ladeluftkühler Intercooler Intercooler Turbo Radyatörü
Intercooler Охладитель всасываемого воздуха töltőlevegő hűtő Intercooler Intercooler Intercooler



• **New** Nouveau **Nuevo** Novo **Nuovo** Nieuw **Neu** Nowość **Yeni** Новый Νέο **Novy**

| Type Ctr. | | CC | | AC | | | OE | Valeo | DIM. | TECH |
|---|---|---|---|---|---|---|---|---|---|---|
| **ALFA ROMEO (.../...)** | | | | | | | | | | |
| **SPIDER (95>2003)** | | | | | | | | | | |
| 2.0 i V6 Turbo 916S2 | E | 1997 | AR16202 | M | | | 05/98 ▸ 02/03 | 60692222 | **818794** | 603 443 | ALB |
| **AUDI** | | | | | | | | | | |
| **80 (91>95)** | | | | | | | | | | |
| 2.2 i Turbo 20V 8C27 ; 8C57 | E | 2226 | ABY | M | | | 02/93 ▸ 06/95 | 8A0145805B | **817762** | 430 187,5 | ALB |
| 1.9 TDi 8C20 ; 8C50 | D | 1896 | 1Z | M | | | 09/91 ▸ 07/95 | 028145805 | **817761** | 251 116 | ALB |
| 1.9 TDi 8C20 ; 8C50 | D | 1896 | 1Z | A | | | 07/93 ▸ 07/95 | 028145805 | **817761** | 251 116 | ALB |
| **100 (82>90)** | | | | | | | | | | |
| 2.0 i 446P | E | 1994 | RT | A | | | 01/90 ▸ 07/90 | 046145803 | | 380 180 | ALB |
| 2.5 TDi 443P ; 445P | D | 2460 | 1T | M | | | 01/90 ▸ 12/90 | 046145803 | | 380 180 | ALB |
| **100 (90>94)** | | | | | | | | | | |
| 2.5 TDi 4A20 ; 4A50 | D | 2460 | AAT,ABP | M | | | 06/91 ▸ 07/94 | 4A0145805E | | 265 232 | ALB |
| 2.5 TDi 4A20 ; 4A50 | D | 2460 | AAT | A | | | 01/93 ▸ 07/94 | 4A0145805E | | 265 232 | ALB |
| **A1 (2010>)** | | | | | | | | | | |
| 1.4 TFSI 122 16V 8X1/A/B | E | 1390 | CAXA | M | | | 08/10 ▸ | 03C145749B | **818838** | 179 116 | ALB |
| 1.4 TFSI 122 16V 8X1/A/B | E | 1390 | CAXA | A | | | 05/10 ▸ | 03C145749B | **818838** | 179 116 | ALB |
| **A2 (2000>2005)** | | | | | | | | | | |
| 1.2 TDi 8Z0/D/E<br>8Z-2-028 001, 8Z-4-016 001 ▸ | D | 1191 | ANY | M | | | 02/02 ▸ 08/05 | 8Z0145805E | **817872** | 280 130 | ALB |
| 1.2 TDi 8Z0/D/E<br>▸ 8Z-2-028 000 | D | 1191 | ANY | M | | | 03/01 ▸ 02/03 | 8Z0145805B | **817872** | 280 130 | ALB |
| 1.4 TDi 8Z00<br>8Z-2-027 001 ▸ | D | 1422 | AMF,BHC | M | | | 02/02 ▸ 12/03 | 8Z0145805C | **817872** | 280 130 | ALB |
| 1.4 TDi 8Z00<br>8Z-4-016 001 ▸ | D | 1422 | BHC | M | | | 12/03 ▸ 08/05 | 8Z0145805E | **817872** | 280 130 | ALB |
| 1.4 TDi 8Z00 | D | 1422 | AMF | M | | Left/gauche | 06/00 ▸ 02/02 | 8Z0145805B | **817872** | 280 130 | ALB |
| **A3 (96>2003)** | | | | | | | | | | |
| 1.8 i Turbo 20V 8L1/A/B/C<br>8L-Y-078950 ▸ | E | 1781 | AGU,AJQ,APP,AQA,ARX,ARY,ARZ AUM,AUQ | M | | Right/Droite | 09/00 ▸ | 1J0145803F | **817457** | 183 189,7 | ALB |
| 1.8 i Turbo 20V 8L1/A/B/C | E | 1781 | AGU,ARX,ARY,AUM,AUQ | M | | | 05/02 ▸ 06/03 | 1J0145803T | **817457** | 183 189,7 | ALB |
| 1.8 i Turbo 20V 8L1/0/A/B/C/H | E | 1781 | AGU | A | | | 12/96 ▸ | 1J0145805B | | 183,4 189,8 | ALB |
| 1.8 i Turbo 20V 8L1/A/B/C | E | 1781 | AGU,AJQ,ARY,ARZ,AUM,AUQ | A | | Right/Droite | 09/00 ▸ | 1J0145803F | **817457** | 183 189,7 | ALB |
| 1.8 i Turbo 20V 8L1/A/B/C<br>8L-3-090 001 ▸ | E | 1781 | AGU,ARX,ARY,AUM,AUQ | A | | | 05/02 ▸ 06/03 | 1J0145803T | **817457** | 183 189,7 | ALB |
| 1.8 i Turbo 20V 8L1/0/A/B/C/H<br>8L-Y-000312, 8L-Y-078950 ▸ 8L-3-090 000, 8L-Y-078949 | E | 1781 | AGU,AJQ,APP,AQA,ARX,ARY,ARZ AUM,AUQ | M | | | 12/96 ▸ 06/03 | 1J0145803G | | 183,4 189,8 | ALB |
| 1.8 i Turbo 20V 8L1/0/A/B/C/H<br>8L-Y-000312, 8L-Y-078950 ▸ 8L-3-090 000, 8L-Y-078949 | E | 1781 | AGU,AJQ,AQA,ARX,ARY,ARZ,AUM AUQ | A | | | 12/96 ▸ 06/03 | 1J0145803G | | 183,4 189,8 | ALB |
| 1.8 i Turbo 20V 8L1/A/B/C<br>▸ 8L-Y-000311 | E | 1781 | AJQ,APP,AQA | M | | Right/Droite | 08/98 ▸ 07/99 | 1J0145805H | | 183,4 189,8 | ALB |
| 1.8 i Turbo 20V 8L1A<br>▸ 8L-Y-000311 | E | 1781 | AJQ | A | | Right/Droite | 01/99 ▸ 07/99 | 1J0145805H | | 183,4 189,8 | ALB |
| 1.8 i Turbo 20V 8L1/A/B/C<br>8L-Y-000312 ▸ 8L-Y-078949 | E | 1781 | AGU,AJQ,APP,AQA,ARZ,AUM | M | | Right/Droite | 07/99 ▸ 08/00 | 1J0145803A | **817457** | 183 189,7 | ALB |
| 1.8 i Turbo 20V 8L1/A/B/C<br>8L-Y-000312 ▸ 8L-Y-078949 | E | 1781 | AGU,AJQ,ARZ | A | | Right/Droite | 07/99 ▸ 08/00 | 1J0145803A | **817457** | 183 189,7 | ALB |
| 1.8 i Turbo 20V 8L1/0/A/B/C/H<br>▸ X010.000 | E | 1781 | AGU,AQA | M | | | 12/96 ▸ | 1J0145805B | | 183,4 189,8 | ALB |
| 1.9 TDi 8L1/0/H | D | 1896 | AGR,AHF,ALH | M | | | 09/96 ▸ 07/98 | 1J0145805B | | 183,4 189,8 | ALB |
| 1.9 TDi 8L1/0/A/B/C/H<br>8L-Y-000312, 8Y-L-000312 ▸ | D | 1896 | AGR,AHF,ALH,ASV,ASZ,ATD | M | | | 09/96 ▸ 06/03 | 1J0145803G | | 183,4 189,8 | ALB |
| 1.9 TDi 8L1/A/B/C<br>8Y-L-000312, 8L-Y-000312 ▸ | D | 1896 | AGR,AHF,ALH,ASV,ATD | M | | Right/Droite | 07/99 ▸ | 1J0145803A | **817457** | 183 189,7 | ALB |
| 1.9 TDi 8L1/A/B/C | D | 1896 | ASZ | M | | Right/Droite | 09/00 ▸ | 1J0145803E | **817653** | 183 189,8 | ALB |
| 1.9 TDi 8L1/A/B/C | D | 1896 | ASZ | M | | | 09/00 ▸ 06/03 | 1J0145803M | **817653** | 183 189,8 | ALB |
| 1.9 TDi 8L1/A/B/C | D | 1896 | AXR | M | | | 11/01 ▸ 06/03 | 1J0145803N | •**817557** | 189 183,4 | ALB |
| 1.9 TDi 8L1/A/B/C | D | 1896 | AXR | M | | Right/Droite | 11/01 ▸ | 1J0145803L | **817653** | 183 189,8 | ALB |
| 1.9 TDi 8L1/0/H | D | 1896 | AGR,AHF,ALH | A | | | 09/96 ▸ 07/98 | 1J0145805B | | 183,4 189,8 | ALB |
| 1.9 TDi 8L1/0/A/B/C/H<br>8Y-L-000312, 8L-Y-000312 ▸ | D | 1896 | AGR,AHF,ALH,ASV,ASZ,ATD | A | | | 09/96 ▸ 06/03 | 1J0145803G | | 183,4 189,8 | ALB |
| 1.9 TDi 8L1/A/B/C<br>8L-Y-000312, 8Y-L-000312 ▸ | D | 1896 | AGR,AHF,ALH,ASV,ATD | A | | Right/Droite | 07/99 ▸ | 1J0145803A | **817457** | 183 189,7 | ALB |

# AUDI (.../...)

## A3 (96>2003) (.../...)

| Type Ctr. | | CC | | AC | | | OE | Valeo | DIM. | TECH |
|---|---|---|---|---|---|---|---|---|---|---|
| 1.9 TDi 8L1/A/B/C | D | 1896 | ASZ | A | | 09/00 ▸ 06/03 | 1J0145803M | **817653** | 183 189,8 | ALB |
| 1.9 TDi 8L1/A/B/C | D | 1896 | ASZ | A | Right/Droite | 11/00 ▸ | 1J0145803E | **817653** | 183 189,8 | ALB |
| 1.9 TDi 8L1/A/B/C ▸ X010.000, 8Y-L-000311 | D | 1896 | AGR,AHF,ALH,ASV | M | | 08/98 ▸ | 1J0145805D | | 183,4 189,8 | ALB |
| 1.9 TDi 8L1/A/B/C | D | 1896 | AGR,AHF,ALH | A | | 08/98 ▸ | 1J0145805D | | 183,4 189,8 | ALB |

## A3 (2003>2008)

| Type Ctr. | | CC | | AC | | | OE | Valeo | DIM. | TECH |
|---|---|---|---|---|---|---|---|---|---|---|
| 1.4 TFSi 8P1/A/B/C ; 8PA/A/B/C | E | 1390 | CAXC | M | | 09/07 ▸ 06/08 | 03C145749B | **818838** | 179 116 | ALB |
| 1.4 TFSi 8P1/A/B/C ; 8PA/A/B/C | E | 1390 | CAXC | A | | 03/08 ▸ 06/08 | 03C145749B | **818838** | 179 116 | ALB |
| 1.8 TFSi 8P1/A/B/C ; 8PA/A/B/C | E | 1798 | BYT | M | | 01/07 ▸ 06/07 | 1K0145803A | **818795** | 617 406 | ALB |
| 1.8 TFSi 8P1/A/B/C ; 8PA/A/B/C | E | 1798 | BYT | A | | 01/07 ▸ 06/07 | 1K0145803A | **818795** | 617 406 | ALB |
| 2.0 FSi 16V,2.0 TFSi 16V 8P1/A/B/C ; 8PA/A/B/C | E | 1984 | AXW,AXX,BLX,BLY,BMB,BWA | M | | 05/03 ▸ 06/08 | 1K0145803A | **818795** | 617 406 | ALB |
| 2.0 FSi 16V,2.0 TFSi 16V 8P1/A/B/C ; 8PA/A/B/C | E | 1984 | AXW,AXX,BLX,BLY,BMB,BWA | A | | 05/03 ▸ | 1K0145803A | **818795** | 617 406 | ALB |
| 1.9 TDi 8P1/A/B/C ; 8PA/A/B/C | D | 1896 | BKC,BXE | M | | 06/03 ▸ 06/08 | 1K0145803E | **818795** | 617 406 | ALB |
| 1.9 TDi 8P1/A/B/C ; 8PA/A/B/C | D | 1896 | BLS | M | | 10/05 ▸ 06/08 | 1K0145803F | **818213** | 617 407 | ALB |
| 1.9 TDi 8PAB ; 8P1/B/C | D | 1896 | BKC,BXE | A | | 03/06 ▸ 06/08 | 1K0145803E | **818795** | 617 406 | ALB |
| 1.9 TDi 8P1/B ; 8PA/B/C | D | 1896 | BLS | A | | 06/06 ▸ 06/08 | 1K0145803F | **818213** | 617 407 | ALB |
| 2.0 TDi 16V 8P1/A/B/C ; 8PA/A/B/C | D | 1968 | AZV,BKD | M | | 05/03 ▸ 06/08 | 1K0145803A | **818795** | 617 406 | ALB |
| 2.0 TDi 16V 8P1/A/B/C ; 8PA/A/B/C/Z | D | 1968 | BMN,BUY | M | | 02/06 ▸ 06/08 | 1K0145803B | **818795** | 617 406 | ALB |
| 2.0 TDi 16V 8P1/A/B/C ; 8PA/A/B/C | D | 1968 | AZV,BKD | A | | 05/03 ▸ | 1K0145803A | **818795** | 617 406 | ALB |
| 2.0 TDi 16V 8P1/A/B/C ; 8PA/A/B/C | D | 1968 | BMN,BUY | A | | 02/06 ▸ | 1K0145803B | **818795** | 617 406 | ALB |

## A3 (2008>)

| Type Ctr. | | CC | | AC | | | OE | Valeo | DIM. | TECH |
|---|---|---|---|---|---|---|---|---|---|---|
| 1.2 TFSi 105,1.2 TSi 105 16V 8P1/A/B/C ; 8PA/A/B/C | E | 1197 | CBZB | M | | 04/10 ▸ | 03C145749B | **818838** | 179 116 | ALB |
| 1.2 TFSi 105,1.2 TSi 105 16V 8P1/A/B/C ; 8PA/A/B/C | E | 1197 | CBZB | A | | 04/10 ▸ | 03C145749B | **818838** | 179 116 | ALB |
| 1.4 TFSi 125 16V 8P1/A/B/C ; 8PA/A/B/C | E | 1390 | CAXC | M | | 07/08 ▸ 09/10 | 03C145749B | **818838** | 179 116 | ALB |
| 1.4 TFSi 125 16V 8P1/A/B/C ; 8PA/A/B/C | E | 1390 | CAXC | A | | 07/08 ▸ 09/10 | 03C145749B | **818838** | 179 116 | ALB |

## A4 (94>98)

| Type Ctr. | | CC | | AC | | | OE | Valeo | DIM. | TECH |
|---|---|---|---|---|---|---|---|---|---|---|
| 1.8 i Turbo 20V 8D2/0/H/S ; 8D5/0/H | E | 1781 | AEB,AJL,APU,ARK | M | | 11/94 ▸ 12/98 | 058145805G | **817625** | 240 175 | ALB |
| 1.8 i Turbo 20V 8D2/0/H/S ; 8D5/0/H | E | 1781 | AEB,AJL | M | | 11/94 ▸ 12/98 | 058145805A | **817625** | 240 175 | ALB |
| 1.8 i Turbo 20V 8D2/0/S | E | 1781 | APU,ARK | M | Right/Droite | 08/98 ▸ 12/98 | 058145805B | **817625** | 240 175 | ALB |
| 1.8 i Turbo 20V 8D2/0/H ; 8D5/0/H | E | 1781 | AEB,APU,ARK | A | | 11/94 ▸ 12/98 | 058145805G | **817625** | 240 175 | ALB |
| 1.8 i Turbo 20V 8D2/0/H ; 8D5/0/H | E | 1781 | AEB | A | | 08/97 ▸ 07/98 | 058145805A | **817625** | 240 175 | ALB |
| 1.8 i Turbo 20V 8D20 | E | 1781 | APU,ARK | A | Right/Droite | 08/98 ▸ 12/98 | 058145805B | **817625** | 240 175 | ALB |
| 2.8 i V6 8D2/0/H | E | 2771 | AAH | M | | 11/94 ▸ 07/97 | 058145805G | **817625** | 240 175 | ALB |
| 2.8 i V6 8D2/0/H | E | 2771 | AAH | A | | 02/95 ▸ 07/97 | 058145805G | **817625** | 240 175 | ALB |
| 1.9 TDi 8D2/0/H ; 8D5/0/H | D | 1896 | 1Z,AFF,AFN,AHH,AHU,AJM | M | | 11/94 ▸ 12/98 | 058145805G | **817625** | 240 175 | ALB |
| 1.9 TDi 8D2/0/H ; 8D5/0/H | D | 1896 | 1Z,AFN,AHU,AJM | A | | 01/95 ▸ 12/98 | 058145805G | **817625** | 240 175 | ALB |
| 2.5 TDi V6 24V 8D20 ; 8D50 | D | 2496 | AFB,AKN | M | Left/gauche | 11/97 ▸ 12/98 | 059145805 | **818827** | 215 172 | ALB |
| 2.5 TDi V6 24V 8D20 ; 8D50 | D | 2496 | AFB,AKN | M | Right/Droite | 11/97 ▸ 12/98 | 059145806 | **818828** | 192 172 | ALB |
| 2.5 TDi V6 24V 8D20 ; 8D50 | D | 2496 | AFB,AKN | A | Left/gauche | 11/97 ▸ 12/98 | 059145805 | **818827** | 215 172 | ALB |
| 2.5 TDi V6 24V 8D20 ; 8D50 | D | 2496 | AFB,AKN | A | Right/Droite | 11/97 ▸ 12/98 | 059145806 | **818828** | 192 172 | ALB |

## A4 (99>2001)

| Type Ctr. | | CC | | AC | | | OE | Valeo | DIM. | TECH |
|---|---|---|---|---|---|---|---|---|---|---|
| 1.8 i Turbo 20V 8D50 ; 8D2/0/S | E | 1781 | AJL,ANB,APU,ARK,AWT | M | | 01/99 ▸ 09/01 | 058145805G | **817625** | 240 175 | ALB |
| 1.8 i Turbo 20V 8D20 ; 8D50 | E | 1781 | ANB,APU,ARK | M | | 01/99 ▸ 11/00 | 058145805B | **817625** | 240 175 | ALB |
| 1.8 i Turbo 20V 8D50 ; 8D2/0/S | E | 1781 | AJL,APU | M | | 02/99 ▸ 09/01 | 058145805A | **817625** | 240 175 | ALB |
| 1.8 i Turbo 20V 8D20 ; 8D50 | E | 1781 | ANB,APU | A | | 01/99 ▸ 09/01 | 058145805G | **817625** | 240 175 | ALB |
| 1.8 i Turbo 20V 8D50 | E | 1781 | ANB,APU | A | Left/gauche | 01/99 ▸ 11/00 | 058145805B | **817625** | 240 175 | ALB |
| 1.8 i Turbo 20V 8D20 | E | 1781 | APU | A | Left/gauche | 02/99 ▸ 11/00 | 058145805A | **817625** | 240 175 | ALB |
| 1.9 TDi 8D20 ; 8D50 | D | 1896 | AFN,AHH,AHU,AJM,ATJ,AVG | M | | 01/99 ▸ 09/01 | 058145805G | **817625** | 240 175 | ALB |
| 1.9 TDi 8D20 ; 8D50 | D | 1896 | AFN,AHH,AHU,AJM,AVG | M | | 01/99 ▸ 11/00 | 058145805A | **817625** | 240 175 | ALB |

Charge Air Cooler Refroidisseur d'air de suralimentation Ladeluftkühler Intercooler Intercooler Turbo Radyatörü
Intercooler Охладитель всасываемого воздуха töltőlevegő hűtő Intercooler Intercooler Intercooler



• **New** Nouveau **Nuevo** Novo **Nuovo** Nieuw **Neu** Nowość **Yeni** Новый Νέο **Novy**

# AUDI (.../...)

## A4 (99>2001) (.../...)

| | | | CC | | AC | | | OE | Valeo | DIM. | | TECH |
|---|---|---|---|---|---|---|---|---|---|---|---|---|
| 1.9 TDi | 8D20 ; 8D50 | D | 1896 | AFN,AHU,AJM | A | | | 01/99 ▸ 09/01 | 058145805G | **817625** | 240 175 | ALB |
| 1.9 TDi | 8D20 ; 8D50 | D | 1896 | AFN,AHU,AJM | A | | Left/gauche | 01/99 ▸ 09/01 | 058145805A | **817625** | 240 175 | ALB |
| 2.5 TDi V6 24V | 8D20 ; 8D50 | D | 2496 | AFB,AKN | M | | Left/gauche | 01/99 ▸ 09/01 | 059145805 | **818827** | 215 172 | ALB |
| 2.5 TDi V6 24V | 8D20 ; 8D50 | D | 2496 | AFB,AKN | M | | Right/Droite | 01/99 ▸ 09/01 | 059145806 | **818828** | 192 172 | ALB |
| 2.5 TDi V6 24V | 8D20 ; 8D50 | D | 2496 | AFB,AKN | A | | Right/Droite | 01/99 ▸ 09/01 | 059145806 | **818828** | 192 172 | ALB |
| 2.5 TDi V6 24V | 8D20 ; 8D50 | D | 2496 | AFB,AKN | A | | Left/gauche | 01/99 ▸ 09/01 | 059145805 | **818827** | 215 172 | ALB |

## A4 (2000>2004)

| | | | | | | | | | | | | |
|---|---|---|---|---|---|---|---|---|---|---|---|---|
| 1.8 i Turbo 20V | 8E50 ; 8E2/0/5 | E | 1781 | AMB,AVJ,BFB | M | | | 12/00 ▸ 12/04 | 8E0145805N | **817867** | 215 196 | ALB |
| 1.8 i Turbo 20V<br>3-320 001 ▸ | 8E20 ; 8E50 | E | 1781 | BEX | M | | | 11/02 ▸ 12/04 | 8E0145806J | **818825** | 209 193 | ALB |
| 1.8 i Turbo 20V | 8E20 ; 8E50 | E | 1781 | BEX | M | | | 11/02 ▸ 12/04 | 8E0145805Q | | 214 192 | ALB |
| 1.8 i Turbo 20V | 8E20 ; 8E50 | E | 1781 | BEX | M | | Right/Droite | 11/02 ▸ 12/04 | 8E0145806F | **818825** | 209 193 | ALB |
| 1.8 i Turbo 20V | 8E2/0/5 ; 8E5/0/5 | E | 1781 | AMB,AVJ,BFB | A | | | 07/01 ▸ 12/04 | 8E0145805N | **817867** | 215 196 | ALB |
| 1.8 i Turbo 20V | 8E20 ; 8E50 | E | 1781 | BEX | A | | Right/Droite | 06/03 ▸ 12/04 | 8E0145806F | **818825** | 209 193 | ALB |
| 1.8 i Turbo 20V | 8E20 ; 8E50 | E | 1781 | BEX | A | | Left/gauche | 06/03 ▸ 12/04 | 8E0145805Q | | 214 192 | ALB |
| 1.8 i Turbo 20V<br>▸ 8E-3-300 000, 3-300 000 | 8E50 ; 8E2/0/5 | E | 1781 | AMB,AVJ,BFB | M | | | 12/00 ▸ 01/03 | 8E0145805L | **817867** | 215 196 | ALB |
| 1.8 i Turbo 20V<br>▸ 8E-3-300 000, 3-300 000 | 8E2/0/5 ; 8E5/0/5 | E | 1781 | AMB,AVJ,BFB | A | | | 04/01 ▸ 01/03 | 8E0145805L | **817867** | 215 196 | ALB |
| 1.9 TDi<br>8E-4-015 001 ▸ | 8E20 ; 8E50 | D | 1896 | AVB,AVF,AWX,BKE | M | | | 12/00 ▸ 12/04 | 8E0145805S | **818757** | 215 218 | ALB |
| 1.9 TDi | 8E20 ; 8E50 | D | 1896 | AVB,AVF,AWX | M | | | 12/00 ▸ 12/04 | 8E0145805F | **818757** | 215 218 | ALB |
| 1.9 TDi<br>8E-2-117 001 ▸ | 8E50 | D | 1896 | AWX | M | | Right/Droite | 09/01 ▸ 06/03 | 8E0145806C | **817869** | 200 193 | ALB |
| 1.9 TDi | 8E20 ; 8E50 | D | 1896 | AVF | A | | | 11/02 ▸ 12/04 | 8E0145805S | **818757** | 215 218 | ALB |
| 1.9 TDi | 8E20 ; 8E50 | D | 1896 | AVF | A | | | 11/02 ▸ 12/04 | 8E0145805F | **818757** | 215 218 | ALB |
| 2.5 TDi 24V,2.5 TDi V6<br>2.5 TDi V6 24V | 8E20 ; 8E50 | D | 2496 | AKE,AYM,BAU,BCZ,BDG,BDH,BFC | M | | Left/gauche | 12/00 ▸ 12/04 | 8E0145805P | **817870** | 200 193 | ALB |
| 2.5 TDi 24V,2.5 TDi V6<br>2.5 TDi V6 24V<br>8E-2-117 001, 2-117 001 ▸ | 8E20 ; 8E50 | D | 2496 | AKE,AYM,BAU,BCZ,BDG,BDH,BFC | M | | Right/Droite | 12/00 ▸ 12/04 | 8E0145806C | **817869** | 200 193 | ALB |
| 2.5 TDi V6,2.5 TDi V6 24V<br>8E-2-117 001, 2-117 001 ▸ | 8E20 ; 8E50 | D | 2496 | AKE,AYM,BAU,BCZ,BDG,BFC | A | | | 04/01 ▸ 12/04 | 8E0145806C | **817869** | 200 193 | ALB |
| 2.5 TDi V6,2.5 TDi V6 24V<br>2-285 001 ▸ | 8E20 ; 8E50 | D | 2496 | AKE,AYM,BAU,BCZ,BDG,BFC | A | | | 04/01 ▸ 12/04 | 8E0145805P | **817870** | 200 193 | ALB |
| 2.5 TDi V6 24V<br>▸ 1-080 000 | 8E20 | D | 2496 | AKE | M | | | 12/00 ▸ 04/01 | 8E0145806D | **817869** | 200 193 | ALB |
| 2.5 TDi V6,2.5 TDi V6 24V<br>▸ 2-285 000 | 8E20 ; 8E50 | D | 2496 | AKE,AYM | M | | | 12/00 ▸ 03/02 | 8E0145805E | **817870** | 200 193 | ALB |
| 2.5 TDi V6,2.5 TDi V6 24V<br>2-117 001 ▸ 2-285 000 | 8E20 ; 8E50 | D | 2496 | AKE,AYM | A | | | 04/01 ▸ 03/02 | 8E0145805E | **817870** | 200 193 | ALB |
| 2.5 TDi V6 24V | 8E20 | D | 2496 | AKE | M | | Left/gauche | 12/00 ▸ 04/01 | 8E0145805G | **817870** | 200 193 | ALB |

## A4 (2004>2008)

| | | | | | | | | | | | | |
|---|---|---|---|---|---|---|---|---|---|---|---|---|
| 1.8 i Turbo 20V | 8EC0 ; 8ED0 | E | 1781 | BFB | M | | | 11/04 ▸ 06/08 | 8E0145805N | **817867** | 215 196 | ALB |
| 1.8 i Turbo 20V | 8EC0 ; 8ED0 | E | 1781 | BFB | A | | | 11/04 ▸ 06/08 | 8E0145805N | **817867** | 215 196 | ALB |
| 1.9 TDi | 8EC0 ; 8ED0 | D | 1896 | BKE,BRB | M | | | 11/04 ▸ 06/08 | 8E0145805S | **818757** | 215 218 | ALB |
| 2.0 TDi | 8EC0 ; 8ED0 | D | 1968 | BPW | M | | | 11/04 ▸ 06/08 | 8E0145805S | **818757** | 215 218 | ALB |
| 2.0 TDi | 8EC0 ; 8ED0 | D | 1968 | BPW | A | | | 11/04 ▸ 06/08 | 8E0145805S | **818757** | 215 218 | ALB |
| 2.5 TDi V6 24V | 8EC0 ; 8ED0 | D | 2496 | BCZ,BDG | M | | Right/Droite | 11/04 ▸ 05/06 | 8E0145806C | **817869** | 200 193 | ALB |
| 2.5 TDi V6 24V | 8EC0 ; 8ED0 | D | 2496 | BCZ,BDG | M | | Left/gauche | 11/04 ▸ 05/06 | 8E0145805P | **817870** | 200 193 | ALB |
| 2.5 TDi V6 24V | 8EC0 ; 8ED0 | D | 2496 | BCZ,BDG | A | | Left/gauche | 11/04 ▸ 05/06 | 8E0145805P | **817870** | 200 193 | ALB |
| 2.5 TDi V6 24V | 8EC0 ; 8ED0 | D | 2496 | BCZ,BDG | A | | Right/Droite | 11/04 ▸ 05/06 | 8E0145806C | **817869** | 200 193 | ALB |

## A4 CABRIOLET (2002>2005)

| | | | | | | | | | | | | |
|---|---|---|---|---|---|---|---|---|---|---|---|---|
| 1.8 i Turbo 20V | 8H70 | E | 1781 | BFB | M | | | 07/02 ▸ 12/05 | 8E0145805N | **817867** | 215 196 | ALB |
| 1.8 i Turbo 20V | 8H70 | E | 1781 | BFB | A | | | 07/02 ▸ 12/05 | 8E0145805N | **817867** | 215 196 | ALB |
| 1.8 i Turbo 20V<br>▸ 8E-3-300 000 | 8H70 | E | 1781 | BFB | M | | | 07/02 ▸ 01/03 | 8E0145805L | **817867** | 215 196 | ALB |
| 1.8 i Turbo 20V<br>▸ 8E-3-300 000 | 8H70 | E | 1781 | BFB | A | | | 07/02 ▸ 01/03 | 8E0145805L | **817867** | 215 196 | ALB |
| 2.5 TDI V6 24V | 8H70 | D | 2496 | BCZ,BDG,BFC | M | | Right/Droite | 08/02 ▸ 12/05 | 8E0145806C | **817869** | 200 193 | ALB |
| 2.5 TDI V6 24V | 8H70 | D | 2496 | BCZ,BDG,BFC | M | | Left/gauche | 08/02 ▸ 12/05 | 8E0145805P | **817870** | 200 193 | ALB |
| 2.5 TDI V6 24V | 8H70 | D | 2496 | BCZ,BDG,BFC | A | | Left/gauche | 08/02 ▸ 12/05 | 8E0145805P | **817870** | 200 193 | ALB |
| 2.5 TDI V6 24V | 8H70 | D | 2496 | BFC | A | | Right/Droite | 08/02 ▸ 05/03 | 8E0145806C | **817869** | 200 193 | ALB |

## A4 CABRIOLET II (2006>2009)

| | | | | | | | | | | | | |
|---|---|---|---|---|---|---|---|---|---|---|---|---|
| 1.8 i Turbo 20V | 8HE0 | E | 1781 | BFB | M | | | 01/06 ▸ 03/09 | 8E0145805N | **817867** | 215 196 | ALB |

# AUDI (.../...)

## A4 CABRIOLET II (2006>2009) (.../...)

| | | | CC | | AC | | | OE | Valeo | DIM. | TECH |
|---|---|---|---|---|---|---|---|---|---|---|---|
| 1.8 i Turbo 20V | 8HE0 | E | 1781 | BFB | A | | 01/06 ▸ 03/09 | 8E0145805N | **817867** | 215 196 | ALB |
| 2.0 TDi | 8HE0 | D | 1968 | BPW,BRC | M | | 01/06 ▸ 03/09 | 8E0145805S | **818757** | 215 218 | ALB |
| 2.0 TDi | 8HE0 | D | 1968 | BPW,BRC | A | | 01/06 ▸ 03/09 | 8E0145805S | **818757** | 215 218 | ALB |

## A6 (97>2001)

| | | | | | | | | | | | |
|---|---|---|---|---|---|---|---|---|---|---|---|
| 1.8 i Turbo 20V | 4B2/0/H ; 4B5/0/H | E | 1781 | AEB,AJL,ANB,APU,ARK,AWT | M | | 04/97 ▸ 05/01 | 058145805G | **817625** | 240 175 | ALB |
| 1.8 i Turbo 20V | 4B2/0/H ; 4B5/0/H | E | 1781 | AEB,AJL | M | | 04/97 ▸ 05/01 | 058145805A | **817625** | 240 175 | ALB |
| 1.8 i Turbo 20V | 4B20 ; 4B50 | E | 1781 | ANB,APU,ARK | M | | 11/98 ▸ 05/01 | 058145805B | **817625** | 240 175 | ALB |
| 1.8 i Turbo 20V | 4B2/0/H ; 4B5/0/H | E | 1781 | AEB | A | Right/Droite | 04/97 ▸ 01/99 | 058145805A | **817625** | 240 175 | ALB |
| 1.8 i Turbo 20V | 4B2/0/H ; 4B5/0/H | E | 1781 | AEB,ANB,APU,ARK,AWT | A | | 04/97 ▸ 05/01 | 058145805G | **817625** | 240 175 | ALB |
| 1.8 i Turbo 20V | 4B20 ; 4B50 | E | 1781 | ANB,APU,ARK | A | | 11/98 ▸ 05/01 | 058145805B | **817625** | 240 175 | ALB |
| 1.9 TDi | 4B2/0/H ; 4B5/0/H | D | 1896 | AFN,AJM | M | | 04/97 ▸ 05/01 | 058145805A | **817625** | 240 175 | ALB |
| 1.9 TDi | 4B2/0/H ; 4B5/0/H | D | 1896 | AFN,AJM,AVG | M | | 04/97 ▸ 05/01 | 058145805G | **817625** | 240 175 | ALB |
| 1.9 TDi | 4B2/0/H ; 4B5/0/H | D | 1896 | AFN,AJM | A | | 04/97 ▸ 05/01 | 058145805A | **817625** | 240 175 | ALB |
| 1.9 TDi | 4B2/0/H ; 4B5/0/H | D | 1896 | AFN,AJM,AVG | A | | 04/97 ▸ 05/01 | 058145805G | **817625** | 240 175 | ALB |
| 2.5 TDi V6 24V | 4B2/0/H ; 4B5/0/H | D | 2496 | AFB,AKE,AKN | M | | 04/97 ▸ 05/01 | 4B0145805A | **817865** | 660 412 | ALB |
| 2.5 TDi V6 24V | 4B2/0/H ; 4B5/0/H | D | 2496 | AFB,AKE,AKN | A | | 07/97 ▸ 05/01 | 4B0145805A | **817865** | 660 412 | ALB |

## A6 (2001>2004)

| | | | | | | | | | | | |
|---|---|---|---|---|---|---|---|---|---|---|---|
| 1.8 i Turbo 20V<br>2-057 760 ▸ | 4B20 ; 4B50 | E | 1781 | AWT | M | | 06/01 ▸ 04/05 | 058145805G | **817625** | 240 175 | ALB |
| 1.8 i Turbo 20V<br>▸ 2-057 759 | 4B20 ; 4B50 | E | 1781 | AWT | M | | 06/01 ▸ 10/01 | 058145805B | **817625** | 240 175 | ALB |
| 1.8 i Turbo 20V<br>▸ 2-057 759 | 4B20 ; 4B50 | E | 1781 | AWT | A | | 06/01 ▸ 04/05 | 058145805G | **817625** | 240 175 | ALB |
| 1.8 i Turbo 20V<br>▸ 2-057 759 | 4B20 ; 4B50 | E | 1781 | AWT | A | | 06/01 ▸ 10/01 | 058145805B | **817625** | 240 175 | ALB |
| 1.9 TDi | 4B20 ; 4B50 | D | 1896 | AVF,AWX | M | | 06/01 ▸ 01/05 | 8E0145805F | **818757** | 215 218 | ALB |
| 1.9 TDi<br>4B-4-007 501 ▸ | 4B50 | D | 1896 | AVF,AWX | M | | 06/03 ▸ 01/05 | 8E0145805S | **818757** | 215 218 | ALB |
| 1.9 TDi | 4B20 ; 4B50 | D | 1896 | AVF,AWX | A | | 06/01 ▸ 01/05 | 8E0145805F | **818757** | 215 218 | ALB |
| 1.9 TDi<br>4B-4-007 501 ▸ | 4B50 | D | 1896 | AVF | A | | 06/03 ▸ 01/05 | 8E0145805S | **818757** | 215 218 | ALB |
| 2.5 TDi V6,2.5 TDi V6 24V | 4B20 ; 4B50 | D | 2496 | AKE,AYM,BAU,BCZ,BDG,BDH,BFC | M | | 06/01 ▸ 04/05 | 4B0145805A | **817865** | 660 412 | ALB |
| 2.5 TDi V6,2.5 TDi V6 24V | 4B20 ; 4B50 | D | 2496 | AKE,AYM,BAU,BCZ,BDG,BDH,BFC | A | | 06/01 ▸ 04/05 | 4B0145805A | **817865** | 660 412 | ALB |

## CABRIOLET

| | | | | | | | | | | | |
|---|---|---|---|---|---|---|---|---|---|---|---|
| 1.9 TDi | 8G70 | D | 1896 | 1Z,AHU | M | | 07/95 ▸ 08/00 | 028145805 | **817761** | 251 116 | ALB |

## S3 (98>2003)

| | | | | | | | | | | | |
|---|---|---|---|---|---|---|---|---|---|---|---|
| 1.8 i Turbo 20V | 8L1/B/S | E | 1781 | AMK,APY,BAM | M | Right/Droite | 11/98 ▸ 06/03 | 8L9145806B | **817487** | 183 174 | ALB |
| 1.8 i Turbo 20V | 8L1/B/S | E | 1781 | AMK,APY,BAM | M | | 11/98 ▸ 06/03 | 8L9145805H | **817488** | 183 137,2 | ALB |
| 1.8 i Turbo 20V | 8L1/B/S | E | 1781 | AMK,APY,BAM | A | Left/gauche | 11/98 ▸ 06/03 | 8L9145805H | **817488** | 183 137,2 | ALB |
| 1.8 i Turbo 20V | 8L1/B/S | E | 1781 | AMK,BAM | A | Right/Droite | 09/00 ▸ 06/03 | 8L9145806B | **817487** | 183 174 | ALB |
| 1.8 i Turbo 20V<br>▸ 8L-Y-110000 | 8L1B | E | 1781 | APY | M | Left/gauche | 11/98 ▸ 03/00 | 8L9145805G | **817488** | 183 137,2 | ALB |
| 1.8 i Turbo 20V | 8L1B | E | 1798 | AUL | M | Left/gauche | 09/99 ▸ 04/01 | 8L9145805H | **817488** | 183 137,2 | ALB |
| 1.8 i Turbo 20V | 8L1B | E | 1798 | AUL | M | Right/Droite | 09/99 ▸ 04/01 | 8L9145806B | **817487** | 183 174 | ALB |
| 1.8 i Turbo 20V | 8L1B | E | 1798 | AUL | A | Left/gauche | 09/99 ▸ 04/01 | 8L9145805H | **817488** | 183 137,2 | ALB |
| 1.8 i Turbo 20V | 8L1B | E | 1798 | AUL | A | Right/Droite | 09/99 ▸ 04/01 | 8L9145806B | **817487** | 183 174 | ALB |

## TT (98>2006)

| | | | | | | | | | | | |
|---|---|---|---|---|---|---|---|---|---|---|---|
| 1.8 i Turbo 20V<br>1-000 001 ▸ | 8N30 ; 8N90 | E | 1781 | APX,BAM | M | | 10/98 ▸ 06/06 | 8L9145805H | **817488** | 183 137,2 | ALB |
| 1.8 i Turbo 20V | 8N30 | E | 1781 | AJQ | M | | 10/98 ▸ 08/00 | 8N0145805C | **817438** | 183,4 177,7 | ALB |
| 1.8 i Turbo 20V | 8N30 ; 8N90 | E | 1781 | AJQ,APP,ARY,AUM,AUQ | M | | 10/98 ▸ 06/06 | 8N0145805D | **817438** | 183,4 177,7 | ALB |
| 1.8 i Turbo 20V | 8N30 ; 8N90 | E | 1781 | APX,BAM | M | Right/Droite | 10/98 ▸ 06/06 | 8L9145806B | **817487** | 183 174 | ALB |
| 1.8 i Turbo 20V | 8N30 | E | 1781 | BAM | A | Left/gauche | 09/00 ▸ 06/06 | 8L9145805H | **817488** | 183 137,2 | ALB |
| 1.8 i Turbo 20V | 8N30 | E | 1781 | BAM | A | Right/Droite | 09/00 ▸ 06/06 | 8L9145806B | **817487** | 183 174 | ALB |
| 1.8 i Turbo 20V | 8N30 ; 8N90 | E | 1781 | AUQ | A | | 09/02 ▸ 06/06 | 8N0145805D | **817438** | 183,4 177,7 | ALB |
| 1.8 i Turbo 20V | 8N30 ; 8N90 | E | 1781 | APX | M | | 10/98 ▸ 04/00 | 8L9145805G | **817488** | 183 137,2 | ALB |

## TT (2006>)

| | | | | | | | | | | | |
|---|---|---|---|---|---|---|---|---|---|---|---|
| 2.0 TFSi 16V | 8J30 | E | 1984 | BWA | M | | 08/06 ▸ | 1K0145803A | **818795** | 617 406 | ALB |

Charge Air Cooler Refroidisseur d'air de suralimentation Ladeluftkühler Intercooler Intercooler Turbo Radyatörü
Intercooler Охладитель всасываемого воздуха töltőlevegő hűtő Intercooler Intercooler Intercooler



• **New** Nouveau **Nuevo** Novo **Nuovo** Nieuw **Neu** Nowość **Yeni** Новый Νέο **Novy**

| | | CC | | AC | | | OE | Valeo | DIM. | TECH |
|---|---|---|---|---|---|---|---|---|---|---|
| **AUDI (.../...)** | | | | | | | | | | |
| **TT (2006>) (.../...)** | | | | | | | | | | |
| 2.0 TFSi 16V 8J30 | E | 1984 | BWA | A | | | 08/06 ▸ | 1K0145803A | **818795** | 617 406 | ALB |
| **BMW** | | | | | | | | | | |
| **1 SERIES F20** | | | | | | | | | | |
| 114i | E | - | N13B16K0 / 75KW | M | | | 06/11 ▸ | 17517600530 | **•818259** | 495 133.3 | ALB |
| 116i | E | - | N13B16U0 / 100KW | M | +/- | | 06/11 ▸ | 17517600530 | **•818259** | 495 133.3 | ALB |
| 116i | E | - | N13B16U0 / 100KW | A | +/- | | 06/11 ▸ | 17517600530 | **•818259** | 495 133.3 | ALB |
| 118i | E | - | N13B16M0 / 125KW | M | | | 06/11 ▸ | 17517600530 | **•818259** | 495 133.3 | ALB |
| 118i | E | - | N13B16M0 / 125KW | A | | | 06/11 ▸ | 17517600530 | **•818259** | 495 133.3 | ALB |
| 125i | E | - | N20B20M0 / 160KW | M | | | 06/11 ▸ | 17517618809 | **•818263** | 495 133.3 | ALB |
| 125i | E | - | N20B20M0 / 160KW | A | | | 06/11 ▸ | 17517618809 | **•818263** | 495 133.3 | ALB |
| M135i | E | - | N55B3000 / 235KW | M | | | 06/11 ▸ | 17517600531 | **•818260** | 495 133.3 | ALB |
| M135i | E | - | N55B3000 / 235KW | A | | | 06/11 ▸ | 17517600531 | **•818260** | 495 133.3 | ALB |
| M235i | E | - | N55B3000 / 235KW | M | | | 06/11 ▸ | 17517600531 | **•818260** | 495 133.3 | ALB |
| M235i | E | - | N55B3000 / 235KW | A | | | 06/11 ▸ | 17517600531 | **•818260** | 495 133.3 | ALB |
| **3 SERIES E36** | | | | | | | | | | |
| 318tds CC/51/52 ; CF/51/52 CJ/50/51/52 | D | 1665 | M41D | M | | | 09/94 ▸ 04/01 | 17512245512 | **817875** | 550 127 | ALB |
| **3 SERIES E46** | | | | | | | | | | |
| 320d AL/70/71/72/78 ; AX/70/72/78 | D | 1951 | M47D20 | M | | | 03/98 ▸ 09/01 | 17512246795 | **817874** | 540 127 | ALB |
| 318d,320d AL/70/71/72/78 ; AX 70/72/78 ; EL/50/51 ; EU/50/51/71/72 | D | 1951 | M47D/20/20UL | M | | | 09/01 ▸ 03/03 | 17517786351 | **818716** | 540 130 | ALB |
| 318d EL/50/51 ; EU/50/51/71/72 | D | 1951 | M47D20UL | M | | | 03/03 ▸ 08/05 | 17517793370 | **818715** | 540 130 | ALB |
| 320d AX/80/81/82/88 | D | 1951 | M47D20 | A | | | 07/99 ▸ 09/01 | 17512246795 | **817874** | 540 127 | ALB |
| 318d EU/81/82 | D | 1951 | M47D20UL | A | | | 09/01 ▸ 03/03 | 17517786351 | **818716** | 540 130 | ALB |
| 318d EU/81/82 | D | 1951 | M47D20UL | A | | | 03/03 ▸ 02/05 | 17517793370 | **818715** | 540 130 | ALB |
| 318d,320d AP/70/71/72/78 ; AS 70/71/72/78 ; AT/70/71/72/91/92 ; EL/71/72 | D | 1995 | M47D20TU,M47N20 | M | | | 09/01 ▸ 03/03 | 17517786351 | **818716** | 540 130 | ALB |
| 318d,320Cd,320d AP/70/71/72/78 ; AS 70/71/72/78 ; AT/70/71/72/91/92 ; BS/71/72 BV/51/52 ; EL/71/72 | D | 1995 | M47D20TU,M47N20 | M | | | 09/01 ▸ 07/06 | 17517793370 | **818715** | 540 130 | ALB |
| 318d,320d AP/80/81/82/88 ; AS 80/81/82/88 ; AT/80/81/82 ; EL/81/82 | D | 1995 | M47D20TU,M47N20 | A | | | 09/01 ▸ 03/03 | 17517786351 | **818716** | 540 130 | ALB |
| 318d,320Cd,320d AP/80/81/82/88 ; AS 80/81/82/88 ; AT/80/81/82 ; BV/61/62 ; EL/81 82 | D | 1995 | M47D20TU,M47N20 | A | | | 02/02 ▸ 05/06 | 17517793370 | **818715** | 540 130 | ALB |
| 330d,330xd AL/90/91/98 ; AP/90 91/98 ; EL/90/98 ; EP/70/78 ; EV/90/91/98 | D | 2926 | 306D1 | M | | | 09/99 ▸ 02/03 | 17517786351 | **818716** | 540 130 | ALB |
| 330d,330xd AL/90/91/98 ; AP/90 91/98 ; EV/90/91/98 | D | 2926 | 306D1 | M | | | 09/99 ▸ 09/01 | 17512246795 | **817874** | 540 127 | ALB |
| 330d,330xd AP00 ; EL00 ; EP80 AL/00/01/08 ; EV/00/08 | D | 2926 | 306D1 | A | | | 09/99 ▸ 02/03 | 17517786351 | **818716** | 540 130 | ALB |
| 330d,330xd AP00 ; AL/00/01/08 EV/00/08 | D | 2926 | 306D1 | A | | | 09/99 ▸ 09/01 | 17512246795 | **817874** | 540 127 | ALB |
| 330Cd,330d,330xd BV/91/92 ; ED/71/91 92 ; ER/90/91/92/98 ; EX/71/91/92 | D | 2993 | M57D/30TU/30-204 | M | | | 03/03 ▸ 05/06 | 17517793370 | **818715** | 540 130 | ALB |
| 330d,330xd ED/71/91/92 ; ER/90 91/92/98 ; EX/71/91/92 | D | 2993 | M57D/30-204/30TU | M | | | 03/03 ▸ 03/03 | 17517786351 | **818716** | 540 130 | ALB |
| 330d,330xd ED/10/81 ; ER/00/02 08 ; EX/10/81 | D | 2993 | M57D/30TU/30-204 | A | | | 03/03 ▸ 03/03 | 17517786351 | **818716** | 540 130 | ALB |
| 330Cd,330d,330xd BV/10 ; ED/10/81 ER/00/02/08 ; EX/10/81 | D | 2993 | M57D/30TU/30-204 | A | | | 03/03 ▸ 05/06 | 17517793370 | **818715** | 540 130 | ALB |
| **5 SERIES E34** | | | | | | | | | | |
| 525tds HA/91/92 ; HG/71/72 | D | 2497 | M51D25 | M | | C | 08/91 ▸ 09/96 | 17512243345 | **817873** | 500 67 | ALB |
| 525tds HA/01/02 ; HG/81/82 | D | 2497 | M51D25 | A | | | 08/91 ▸ 09/96 | 17512243345 | **817873** | 500 67 | ALB |
| **5 SERIES E39** | | | | | | | | | | |
| 520d DM/70/71 ; DR/70/71 | D | 1951 | M47D20 | M | | | 01/00 ▸ 04/04 | 17512247359 | **817877** | 540 97 | ALB |
| 525Td,525tds DF/50/51/70/71/72 78 ; DG/70/71/78 ; DJ/71/72 | D | 2497 | M51D25 | M | | | 10/95 ▸ 04/04 | 17512246031 | **817876** | 192 202 | ALB |
| 525d DL/90/91/98 ; DP/90/91/98 | D | 2497 | M57D25 | M | | | 01/00 ▸ 04/04 | 17512247359 | **817877** | 540 97 | ALB |
| 525tds DF/80/81/82/88 ; DG 80/81/88 ; DJ/81/82 | D | 2497 | M51D25 | A | | | 10/95 ▸ 04/04 | 17512246031 | **817876** | 192 202 | ALB |
| 525d DL/00/01/08 ; DP/00/01/08 | D | 2497 | M57D25 | A | | | 01/00 ▸ 04/04 | 17512247359 | **817877** | 540 97 | ALB |

| Type Ctr. | | CC | | AC | | | OE | Valeo | DIM. | TECH |
|---|---|---|---|---|---|---|---|---|---|---|
| **BMW (.../...)** | | | | | | | | | | |
| **5 SERIES E39 (.../...)** | | | | | | | | | | |
| 530d DL//70/71/72/78 ; DP//70/71/72/78 | D | 2926 | 306D1,M57D30-193 | M | | | 09/98 ▸ 04/04 | 17512247359 | **817877** | 540 97 | ALB |
| 530d DL/80/81/82/88 ; DP//80/81/82/88 | D | 2926 | 306D1,M57D30-193 | A | | | 09/98 ▸ 04/04 | 17512247359 | **817877** | 540 97 | ALB |
| **5 SERIES E60** | | | | | | | | | | |
| 520d NC31 ; NJ31 | D | 1995 | M47D20TU2 | M | | | 09/05 ▸ 12/06 | 17517795823 | **•818273** | | |
| 520d NC41 ; NJ41 | D | 1995 | M47D20TU2 | A | | | 09/05 ▸ 12/06 | 17517795823 | **•818273** | | |
| 525d NC51 ; NJ51 | D | 2497 | M57D25TU | M | | | 05/03 ▸ 12/06 | 17517787446 | **818796** | 543 97 | ALB |
| 525d NC61 ; NJ61 | D | 2497 | M57D25TU | A | | | 05/03 ▸ 12/06 | 17517787446 | **818796** | 543 97 | ALB |
| 530d NJ71 ; NC/71/72 | D | 2993 | 306D2 | M | | | 05/03 ▸ 12/06 | 17517787446 | **818796** | 543 97 | ALB |
| 530d,530xd NP71 ; NM/71 ; NS71 NR/71/72 | D | 2993 | 306D3 | M | | | 09/05 ▸ 12/06 | 17517795823 | **•818273** | | |
| 530d,535d NA/82 ; NC/81/82/91 NV81 ; NJ/81/91 | D | 2993 | 306D2,M57D30TU | A | | | 05/03 ▸ 12/06 | 17517787446 | **818796** | 543 97 | ALB |
| 530d,530xd NP81 ; NM/81 ; NS81 NR/81/82 | D | 2993 | 306D3 | A | | | 09/05 ▸ 12/06 | 17517795823 | **•818273** | | |
| **5 SERIES E60/61 LCI** | | | | | | | | | | |
| 2.0 d 16V NX/11/12/31/32 ; PX 11/12/31/32 | D | 1995 | M47D20O2,N47D20O0 | M | | | 01/07 ▸ | 17517795823 | **•818273** | | |
| 2.0 d 16V NX/21/22/41/42 ; PX 21/22/41/42 | D | 1995 | M47D20O2,N47D20O0 | A | | | 01/07 ▸ | 17517795823 | **•818273** | | |
| 3.0 d 24V NX/51/52/71/72 ; NY 51/71 ; PX/51/52/71/72 ; PY/51/71 | D | 2993 | M57D30U2,M57N2 | M | | | 01/07 ▸ | 17517795823 | **•818273** | | |
| 3.0 d 24V NX/61/62/81/82/91 92 ; NY/61/62/81 ; PX/61/62/81/82/91/92 ; PY 61/81 | D | 2993 | 306D/5,M57D/30U2,M57N2 | A | | | 01/07 ▸ | 17517795823 | **•818273** | | |
| **7 SERIES E38** | | | | | | | | | | |
| 725Tds GE91 | D | 2497 | M51D25 | M | | | 04/96 ▸ 08/01 | 17512246031 | **817876** | 192 202 | ALB |
| 725Tds GE01 | D | 2497 | M51D25 | A | | | 04/96 ▸ 08/01 | 17512246031 | **817876** | 192 202 | ALB |
| 730d GE/60/61 | D | 2926 | 306D1 | A | | | 09/98 ▸ 03/00 | 17512247359 | **817877** | 540 97 | ALB |
| **X3 (2003>2006)** | | | | | | | | | | |
| 2.0 d PB11 | D | 1995 | M47D20TU | M | | | 09/04 ▸ 07/06 | 17517793370 | **818715** | 540 130 | ALB |
| 3.0 d PB51 ; PD51 | D | 2993 | 306D2,M57D30-204 | M | | | 10/03 ▸ 07/06 | 17517793370 | **818715** | 540 130 | ALB |
| 3.0 d PB51 ; PD61 | D | 2993 | 306D2,M57D30-204 | A | | | 10/03 ▸ 07/06 | 17517793370 | **818715** | 540 130 | ALB |
| **X3 E83 LCI (2006>)** | | | | | | | | | | |
| 2.0 d PD/11/12 | D | 1995 | M47D20TU | M | | | 08/06 ▸ 08/07 | 17517793370 | **818715** | 540 130 | ALB |
| **X3 (2010>)** | | | | | | | | | | |
| 3.0 i WX/71/72 | E | 2979 | N55B30A | A | | | 09/10 ▸ | 17517593845 | **•818253** | 495 147,4 | |
| 2.0 d WY/31/32 | D | 1995 | N47D20C | M | | | 09/10 ▸ | 17517823570 | **•818252** | 495 147,4 | ALB |
| 2.0 d WY/41/42 | D | 1995 | N47D20C | A | | | 09/10 ▸ | 17517823570 | **•818252** | 495 147,4 | ALB |
| 3.0 d WY/51/52 | D | 2993 | N57D30A | A | | | 04/11 ▸ | 17517823571 | **•818254** | 495 147,4 | ALB |
| **CHRYSLER** | | | | | | | | | | |
| **GRAND VOYAGER (91>96)** | | | | | | | | | | |
| 2.5 TD | D | 2499 | MOU | M | | | 10/93 ▸ 10/95 | 4682528 | | 674 395 | ALB |
| **GRAND VOYAGER (96>2001)** | | | | | | | | | | |
| 2.5 TD | D | 2499 | MOU | M | | | 01/96 ▸ 03/01 | 4798014 | **816959** | 631 375 | ALB |
| **GRAND VOYAGER (2004>2008)** | | | | | | | | | | |
| 2.8 CRD | D | 2776 | ENR | A | | | 07/04 ▸ 01/08 | 5142489AA | **817736** | 323 401 | ALB |
| **VOYAGER (91>95)** | | | | | | | | | | |
| 2.5 TD HN5MR ; HN5M | D | 2499 | MOU | M | +/- | | 01/93 ▸ 10/95 | 4682528 | | 674 395 | ALB |
| 2.5 TD HN5MR ; HN5M | D | 2499 | MOU | M | - | | 01/93 ▸ 10/95 | 4682089 | | 674 395 | ALB |
| **VOYAGER (96>2001)** | | | | | | | | | | |
| 2.5 TD | D | 2499 | ENC | M | | | 01/96 ▸ 03/01 | 4798014 | **816959** | 631 375 | ALB |

Charge Air Cooler Refroidisseur d'air de suralimentation Ladeluftkühler Intercooler Intercooler Turbo Radyatörü
Intercooler Охладитель всасываемого воздуха töltőlevegő hűtő Intercooler Intercooler Intercooler



• **New** Nouveau **Nuevo** Novo **Nuovo** Nieuw **Neu** Nowość **Yeni** Новый Νέο **Novy**

| Type Ctr. | | CC | | AC | | | OE | Valeo | DIM. | TECH |
|---|---|---|---|---|---|---|---|---|---|---|
| **CHRYSLER (.../...)** | | | | | | | | | | |
| **VOYAGER (2004>)** | | | | | | | | | | |
| 2.8 CRD | D | 2776 | ENR | A | | | 07/04 ▸ 02/08 | 5142489AA | **817736** | 323 401 | ALB |
| **CITROEN** | | | | | | | | | | |
| **BX** | | | | | | | | | | |
| 1.7 TD XBE/K/L/X | D | 1769 | XUD7TE | M | | | 01/88 ▸ 12/94 | 0384A8 | | 142 447 | ALB |
| **C3 (2002>2005)** | | | | | | | | | | |
| 1.4 HDi 16V FN8HYB ; FR8HYB FC8/HYB | D | 1398 | DV4TED4 | M | | | 04/02 ▸ 10/05 | 0384G2 | **817651** | 275 147,4 | ALB |
| **C4** | | | | | | | | | | |
| 1.6 HDi 16V LA9/HVC/HXC/HY/HYC HZC/HZH ; LD9HZC ; LC9/HVC/HXC/HYB/HYC/HZC HZH ; LG9/HXC/HZC | D | 1560 | DV6ATED4,DV6TED4,DV6TED4B | M | | | 11/04 ▸ 01/11 | 0384G4 | **817638** | 300 133,4 | ALB |
| 1.6 HDi 16V LA9/HVC/HXC/HY/HYC HZC/HZH ; LD9HZC ; LC9/HVC/HXC/HYB/HYC/HZC HZH ; LG9/HXC/HZC 11263 ▸ | D | 1560 | DV6ATED4,DV6TED4,DV6TED4B | M | | | 09/07 ▸ 01/11 | 0384L4 | **818837** | 300 147,4 | ALB |
| 1.6 HDi 16V LC9HZ | D | 1560 | DV6TED4 | A | | | 03/06 ▸ 06/10 | 0384G4 | **817638** | 300 133,4 | ALB |
| 1.6 HDi 16V LC9HZ 11263 ▸ | D | 1560 | DV6TED4 | A | | | 09/07 ▸ 06/10 | 0384L4 | **818837** | 300 147,4 | ALB |
| 1.6 HDi 16V LA9/HVC/HXC/HY/HYC HZC/HZH ; LC9/HVC/HXC/HYB/HYC/HZC/HZH ; LG9 HXC/HZC ▸ 11262 | D | 1560 | DV6ATED4,DV6TED4,DV6TED4B | M | | | 11/04 ▸ 01/11 | 0384H5 | **817845** | 300 147,4 | ALB |
| 1.6 HDi 16V LC9HZ ▸ 11262 | D | 1560 | DV6TED4 | A | | | 03/06 ▸ 09/07 | 0384H5 | **817845** | 300 147,4 | ALB |
| 2.0 HDi 16V LARHRH ; LCRHRH ▸ 11192 | D | 1997 | DW10BTED4 | M | | Right/Droite | 11/04 ▸ 07/07 | 0384G4 | **817638** | 300 133,4 | ALB |
| 2.0 HDi 16V LAR/HR ; LCR/HR/HRJ | D | 1997 | DW10BTED4 | A | | Right/Droite | 11/04 ▸ 07/07 | 0384K0 | **818769** | | |
| **C4 PICASSO (2006>)** | | | | | | | | | | |
| 1.6 HDi 16V UA9/HZC/HZH ; UD9 HZC/HZH | D | 1560 | DV6TED4 | M | | | 09/06 ▸ | 0384H5 | **817845** | 300 147,4 | ALB |
| 1.6 HDi 16V UA9/HYB/HYC/HZC/HZH UD9/HYB/HYC/HZC/HZH | D | 1560 | DV6TED4 | M | | | 09/07 ▸ | 0384L4 | **818837** | 300 147,4 | ALB |
| 2.0 HDi 16V UARHRH ; UDRHRH | D | 1997 | DW10BTED4 | M | | | 09/06 ▸ | 0384K0 | **818769** | | |
| 2.0 HDi 16V UDRHRJ | D | 1997 | DW10BTED4 | A | | | 03/07 ▸ | 0384K0 | **818769** | | |
| **C5 (2001>2004)** | | | | | | | | | | |
| 2.0 HDi DCR/HYB/HZB ; DER HSB/HYB/HZB | D | 1997 | DW10ATED,DW10TD | M | | | 02/01 ▸ 08/04 | 0384F3 | **817437** | 300 133,4 | ALB |
| 2.0 HDi DCR/HZE/HZF ; DER HZE/HZF | D | 1997 | DW10ATED | A | | | 02/01 ▸ 08/04 | 0384F3 | **817437** | 300 133,4 | ALB |
| 2.2 HDi 16V DC4HXB ; DE4HXB | D | 2179 | DW12TED4 | M | | | 02/01 ▸ 08/04 | 0384F3 | **817437** | 300 133,4 | ALB |
| 2.2 HDi 16V DC4HXE ; DE4HXF | D | 2179 | DW12TED4 | A | | | 02/01 ▸ 08/04 | 0384F3 | **817437** | 300 133,4 | ALB |
| **C5 (2004>2007)** | | | | | | | | | | |
| 1.6 HDi 16V RC9/HYB/HZC ; RE9 HYB/HZC | D | 1560 | DV6TED4 | M | | | 09/04 ▸ 06/08 | 0384G6 | **817639** | 300 133,4 | ALB |
| 2.0 HDi 16V RCR/HRG/HRH ; RER HRG/HRH | D | 1997 | DW10BTED4 | M | | | 09/04 ▸ 06/08 | 0384G6 | **817639** | 300 133,4 | ALB |
| 2.0 HDi 16V RCR/HRJ ; RER/HRG HRJ | D | 1997 | DW10BTED4 | A | | | 11/05 ▸ 06/08 | 0384G6 | **817639** | 300 133,4 | ALB |
| 2.2 HDi 16V RC4HXE ; RE4HXE | D | 2179 | DW12TED4 | A | | | 09/04 ▸ 12/05 | 0384G9 | **•817854** | | |
| **C5 (2008>)** | | | | | | | | | | |
| 1.6 THP-155 16V RD5FV8 ; RW5FV8 | E | 1598 | EP6CDT | M | | | 10/09 ▸ | 1440Q9 | **•818227** | | |
| 1.6 THP-155 16V RD5FVA ; RW5FVA | E | 1598 | EP6CDT | A | | | 04/10 ▸ | 1440Q9 | **•818227** | | |
| 1.6 HDi RD9HZC ; RW9HZC | D | 1560 | DV6TED4 | M | | | 03/08 ▸ | 0384G6 | **817639** | 300 133,4 | ALB |
| 1.6 HDi 110 RD9HR ; RW9HR | D | 1560 | DV6C | M | | | 10/10 ▸ | 0384P5 | **•818244** | 300 153 | ALB |
| 2.0 HDi RDR/HF8/HRH ; RWR HF8/HRH | D | 1997 | DW10BTED4 | M | | | 03/08 ▸ | 0384K8 | **818853** | 300 147,4 | ALB |
| 2.0 HDi RDRHRJ ; RWRHRJ | D | 1997 | DW10BTED4 | A | | | 03/08 ▸ | 0384K8 | **818853** | 300 147,4 | ALB |
| **C8** | | | | | | | | | | |
| 2.0 HDi 16V EARHTB ; EBRHTB | D | 1997 | DW10ATED4 | M | | | 06/02 ▸ 07/06 | 0384G0 | **817650** | 376 133,6 | ALB |

| Type Ctr. | | CC | | AC | | 2+3 | OE | Valeo | DIM. | TECH |
|---|---|---|---|---|---|---|---|---|---|---|
| **CITROEN** (.../...) | | | | | | | | | | |
| **C8 (.../...)** | | | | | | | | | | |
| 2.0 HDi 16V EAR/HME ; EBR/HME HWB | D | 1997 | DW10ATED4 | A | | 06/02 ▸ 10/06 | 0384G0 | **817650** | 376 133,6 | ALB |
| 2.2 HDi 16V EA4HWB ; EB4HWB | D | 2179 | DW12TED4 | M | | 06/02 ▸ 02/04 | 0384G0 | **817650** | 376 133,6 | ALB |
| **EVASION (94>98)** | | | | | | | | | | |
| 2.0 i Turbo CT U6UA | E | 1998 | XU10J2TE | M | | 07/94 ▸ 09/98 | 0384E7 | **816851** | 680 322 | ALM |
| 1.9 TD U6U/C/J/J/8/J/T | D | 1905 | XUD9BTF,XUD9TEF,XUD9TF | M | | 10/94 ▸ 09/98 | 0384E7 | **816851** | 680 322 | ALM |
| 2.1 TD 12V U6UW | D | 2088 | XUD11BTE | M | | 04/96 ▸ 09/98 | 0384E7 | **816851** | 680 322 | ALM |
| **EVASION (98>2002)** | | | | | | | | | | |
| 2.0 i Turbo CT U6UA | E | 1998 | XU10J2TE | M | | 10/98 ▸ 05/02 | 0384E7 | **816851** | 680 322 | ALM |
| 1.9 TD U6U/C/C/T | D | 1905 | XUD9BTF | M | | 10/98 ▸ 05/02 | 0384E7 | **816851** | 680 322 | ALM |
| 2.0 HDi,2.0 HDi 16V AFR/HWB/HZA | D | 1997 | DW10ATED,DW10ATED4 | M | | 08/99 ▸ 05/02 | 0384E7 | **816851** | 680 322 | ALM |
| 2.1 TD 12V U6U/W/W/T | D | 2088 | XUD11BTE | M | | 10/98 ▸ 05/02 | 0384E7 | **816851** | 680 322 | ALM |
| **SYNERGIE (95>98)** | | | | | | | | | | |
| 1.9 TD U6U/C/J | D | 1905 | XUD9BTF,XUD9TEF | M | | 10/95 ▸ 09/98 | 0384E7 | **816851** | 680 322 | ALM |
| **SYNERGIE (98>2002)** | | | | | | | | | | |
| 1.9 TD U6UC | D | 1905 | XUD9BTF | M | | 10/98 ▸ 05/02 | 0384E7 | **816851** | 680 322 | ALM |
| 2.0 HDi AFRHZA | D | 1997 | DW10ATED | M | | 08/99 ▸ 05/02 | 0384E7 | **816851** | 680 322 | ALM |
| **XANTIA (93>97)** | | | | | | | | | | |
| 2.0 i Turbo CT X11/F ; X16/D/E | E | 1998 | XU10J2TE | M | | 07/95 ▸ 12/97 | 0384E8 | **816889** | 580 359 | ALM |
| 1.9 TD X18E ; X17/E/E/T | D | 1905 | XUD9BTF | M | | 08/97 ▸ 12/97 | 0384E8 | **816889** | 580 359 | ALM |
| 2.1 TD 12V X12G ; X13G ; X14G X15G ; X18D ; X11/G | D | 2088 | XUD11BTE | M | | 07/95 ▸ 12/97 | 0384E8 | **816889** | 580 359 | ALM |
| **XANTIA (97>2002)** | | | | | | | | | | |
| 2.0 i Turbo CT X2RGXF ; X7RGXF X1R/GXF | E | 1998 | XU10J2TE | M | | 12/97 ▸ 05/02 | 0384E8 | **816889** | 580 359 | ALM |
| 1.9 TD X1DHXF ; X2DHXF | D | 1905 | XUD9BTF | M | + | 12/97 ▸ 05/02 | 0384E8 | **816889** | 580 359 | ALM |
| 1.9 TD X1DHXM ; X2DHXM | D | 1905 | XUD9BTF | A | + | 12/97 ▸ 05/02 | 0384E8 | **816889** | 580 359 | ALM |
| 2.0 HDi X2RHZF | D | 1997 | DW10ATED | M | | C 10/98 ▸ 05/02 | 0384A8 | | 142 447 | ALB |
| 2.0 HDi X2RHZF ; X7RHZF X1R/HZF | D | 1997 | DW10ATED | M | | 10/98 ▸ 05/02 | 0384E8 | **816889** | 580 359 | ALM |
| 2.1 TD 12V X2P8CF ; X7P8CF X1P/8CF | D | 2088 | XUD11BTE | M | | 12/97 ▸ 05/02 | 0384E8 | **816889** | 580 359 | ALM |
| **XM (89>94)** | | | | | | | | | | |
| 2.0 i Turbo CT Y3A/X/Y | E | 1998 | XU10J2TE | M | | 09/92 ▸ 06/94 | 0384C0 | | 610 359 | ALM |
| 2.0 i Turbo CT Y3A/X/Y | E | 1998 | XU10J2TE | M | | 09/92 ▸ 06/94 | 95666891 | | 610 359 | ALM |
| 2.0 i Turbo CT Y3A/XA/YA | E | 1998 | XU10J2TE | A | | 07/92 ▸ 06/94 | 0384C0 | | 610 359 | ALM |
| 2.0 i Turbo CT Y3A/XA/YA | E | 1998 | XU10J2TE | A | | 07/92 ▸ 06/94 | 95666891 | | 610 359 | ALM |
| 2.1 TD Turbo D12 12V Y3A/F/K/T | D | 2088 | XUD11ATE | M | | 11/89 ▸ 06/94 | 95666891 | | 610 359 | ALM |
| 2.1 TD Turbo D12 12V Y3A/F/K/T | D | 2088 | XUD11ATE | M | | 11/89 ▸ 06/94 | 0384C0 | | 610 359 | ALM |
| 2.1 TD Turbo D12 12V Y3ATA | D | 2088 | XUD11ATE | A | | 07/92 ▸ 06/94 | 95666891 | | 610 359 | ALM |
| 2.1 TD Turbo D12 12V Y3ATA | D | 2088 | XUD11ATE | A | | 07/92 ▸ 06/94 | 0384C0 | | 610 359 | ALM |
| **XM (94>2001)** | | | | | | | | | | |
| 2.0 i Turbo CT Y4G/G/M | E | 1998 | XU10J2TE | M | | 07/94 ▸ 07/01 | 0384C0 | | 610 359 | ALM |
| 2.0 i Turbo CT Y4T/S/T | E | 1998 | XU10J2TE | A | | 07/94 ▸ 07/01 | 0384C0 | | 610 359 | ALM |
| 2.1 TD Turbo D12 12V Y4G/X/Y | D | 2088 | XUD11ATE | M | | 07/94 ▸ 06/95 | 0384C0 | | 610 359 | ALM |
| 2.1 TD Turbo D12 12V Y4G/X/Y | D | 2088 | XUD11ATE | M | | 07/94 ▸ 06/95 | 95666891 | | 610 359 | ALM |
| 2.1 TD Turbo D12 12V Y4MZ ; Y4G/X/Y/Z | D | 2088 | XUD11ATE,XUD11BTE | M | | 06/95 ▸ 07/01 | 0384F1 | **816919** | 610 359 | ALM |
| 2.1 TD Turbo D12 12V Y4NW ; Y4TD | D | 2088 | XUD11ATE | A | | 07/94 ▸ 06/95 | 0384C0 | | 610 359 | ALM |
| 2.1 TD Turbo D12 12V Y4NW ; Y4RN ; Y4TD Y4C/W | D | 2088 | XUD11ATE,XUD11BTE | A | | 07/95 ▸ 07/01 | 0384F1 | **816919** | 610 359 | ALM |
| 2.1 TD Turbo D12 12V Y4NW ; Y4TD ▸ 6778 | D | 2088 | XUD11ATE | A | | 07/94 ▸ 06/95 | 95666891 | | 610 359 | ALM |
| 2.5 TD Turbo D Y4RM ; Y4N/X/Y | D | 2446 | DK5ATE | M | | 07/94 ▸ | 0384E5 | **817204** | 310 126 | ALM |
| **XSARA (97>2000)** | | | | | | | | | | |
| 1.9 TD N1DHYF ; N2DHYF N6DHYF ; N0D/HYF | D | 1905 | XUD9TE | M | | 07/97 ▸ 08/00 | 0384C7 | | 142 444 | ALB |
| **XSARA PICASSO** | | | | | | | | | | |
| 1.6 HDi 16V CH9/HXC/HYB/HZC | D | 1560 | DV6ATED4,DV6TED4 | M | | 03/04 ▸ 05/07 | 0384G5 | •**817706** | 300 147,5 | ALB |

Charge Air Cooler Refroidisseur d'air de suralimentation Ladeluftkühler Intercooler Intercooler Turbo Radyatörü
Intercooler Охладитель всасываемого воздуха töltőlevegő hűtő Intercooler Intercooler Intercooler



• **New** Nouveau **Nuevo** Novo **Nuovo** Nieuw **Neu** Nowość **Yeni** Новый Νέο **Nový**

| Type Ctr. | | CC | | AC | | | OE | Valeo | DIM. | TECH |
|---|---|---|---|---|---|---|---|---|---|---|
| **CITROEN (.../...)** | | | | | | | | | | |
| **ZX** | | | | | | | | | | |
| 1.9 TD N2D9 ; N2C/7/8 ; N2F 4/5 | D | 1905 | XUD9TE | M | | | 07/92 ▸ 07/98 | 0384C7 | 142 444 | ALB |
| 1.9 TD N2D9 ; N2F5 | D | 1905 | XUD9TE | M | | | 02/94 ▸ 07/98 | 96090690 | 142 444 | ALB |
| **CITROEN** | | | | | | | | | | |
| **BERLINGO (2002>)** | | | | | | | | | | |
| 1.6 HDi,1.6 HDi 16V GB9/HWC/HXC ; GC9/HW HXC ; GJ9/HW/HXC | D | 1560 | DV6ATED4,DV6BTED4 | M | | | 01/06 ▸ 05/08 | 0384G5 | •817706 | 300 147,5 | ALB |
| **BERLINGO (B9) (2008>)** | | | | | | | | | | |
| 1.6 HDi 16V 7A9/HTC/HXC ; 7B9 HTC/HXC ; 7J9/HTC/HXC | D | 1560 | DV6ATED4,DV6AUTED4,DV6BTED4 DV6BUTED4 | M | | | 05/08 ▸ | 0384L9 | 818866 | 300 147,4 | ALB |
| 1.6 HDi 16V 7J9HZC | D | 1560 | DV6TED4 | M | | | 05/08 ▸ | 0384L4 | 818837 | 300 147,4 | ALB |
| **DISPATCH (95>2003)** | | | | | | | | | | |
| 1.9 TD BZDHXA ; U6KS ; BYD HXA ; U6U/K/R/S/5 | D | 1905 | XUD9BTF,XUD9TF | M | | | 09/95 ▸ 12/03 | 0384E7 | 816851 | 680 322 | ALM |
| **DISPATCH (2004>2006)** | | | | | | | | | | |
| 2.0 HDi | D | 1997 | DW10BTED,DW10BTED+L4 | M | | | 01/04 ▸ 12/06 | 0384E7 | 816851 | 680 322 | ALM |
| **JUMPER (94>2001)** | | | | | | | | | | |
| 1.9 TD 231/A72/A74/A82/A84 B72/B74/B82/B84/C72/C82/E72/G72/G82/H72/H82 V72/V82 ; 232/B72/B82/C72/C82/G72/G82/H72 H82/V82 | D | 1905 | XUD9TEF,XUD9UTF | M | | | 02/94 ▸ 12/01 | 0384E4 | 817632 | 295 202 | ALB |
| 2.5 TDi 231/B42/B44/C42/C44 G42/H42/J42/V42/V44 ; 232/B42/B44/F42/G42 H42/H44/J42/J44/K42/K44/L42/N42/N44/V42/V44 233/B42/B44/D42/G42/H42/J42/J44/K42/K44/L42 N42/N44 | D | 2446 | DJ5TED | M | | | 07/96 ▸ 12/01 | 0384E4 | 817632 | 295 202 | ALB |
| 2.8 D 232 | D | 2798 | 8140-63 | M | | | 06/99 ▸ 12/01 | 0384E4 | 817632 | 295 202 | ALB |
| **JUMPY (95>2003)** | | | | | | | | | | |
| 1.9 TD BBDHXA ; BEDHXA BSDHXA ; BUDHXA ; BWDHXA ; BYDHXA ; BZDHXA BAD/HXA ; U6K/S/U/U/R ; U6U/H/K/L/R/R/8/R/9 S/5/S/6/S/8/S/9 | D | 1905 | XUD9BTF,XUD9TF | M | | | 09/95 ▸ 12/03 | 0384E7 | 816851 | 680 322 | ALM |
| 2.0 HDi,2.0 HDi 16V BBRHZA ; BCRHZB BAR/HWB/HXA/HZA/HZB ; BDR/HXB/HZA/HZB ; BER HXA/HZA/HZB ; BTRHWB ; BURHZB ; BWRHZB ; BSR HXA/HXB/HZB ; BYR/HXA/HXB/HZB ; BZR/HWB/HXA HXB | D | 1997 | DW10ATED,DW10ATED4,DW10BTED DW10CTED | M | | | 09/00 ▸ 12/03 | 0384E7 | 816851 | 680 322 | ALM |
| **JUMPY (2004>2006)** | | | | | | | | | | |
| 2.0 HDi,2.0 HDi 16V BBR/HXB/HZB ; BER HXB/HZB ; BURHZB ; BSR/HXB/HZB ; BWR/HXB HZB ; BZRHWB ; BYR/HWB/HXB/HZB | D | 1997 | DW10ATED4,DW10BTED DW10BTED+L4 | M | | | 01/04 ▸ 12/06 | 0384E7 | 816851 | 680 322 | ALM |
| **FIAT** | | | | | | | | | | |
| **ALBEA** | | | | | | | | | | |
| 1.3 JTD 16V 178CY | D | 1248 | 188A9.000 | M | | | 09/03 ▸ | 51718679 | 818229 | 410 116,2 | ALB |
| **BRAVA** | | | | | | | | | | |
| 1.9 TD 182/BF/BF1A | D | 1910 | 182A7.000 | M | | | 03/96 ▸ 03/02 | 46440215 | 817881 | 295 202 | ALB |
| **BRAVO (95>98)** | | | | | | | | | | |
| 1.9 TD 182AF1A | D | 1910 | 182A7.000 | M | | | 03/96 ▸ 09/98 | 46440215 | 817881 | 295 202 | ALB |
| **BRAVO (98>2006)** | | | | | | | | | | |
| 1.9 TD 182AF1A | D | 1910 | 182A7.000 | M | | | 10/98 ▸ 03/02 | 46440215 | 817881 | 295 202 | ALB |
| **BRAVO II (2007>2009)** | | | | | | | | | | |
| 1.4 MPi 16V,1.4 Tjet 16V 198/AX/AXA1/AXF1 | E | 1368 | 192B2.000,198A1.000,198A4.000 | M | | | 02/07 ▸ 12/09 | 51783791 | 818824 | 572 132 | ALB |
| 1.6 MJTD 105,1.6 MJTD 120 198/AXH1/AXL1 | D | 1598 | 198A2.000/F,198A3.000 | M | | | 02/08 ▸ 12/09 | 51783791 | 818824 | 572 132 | ALB |

| Type Ctr. | | CC | | AC | | | OE | Valeo | DIM. | TECH |
|---|---|---|---|---|---|---|---|---|---|---|
| **FIAT** (.../...) | | | | | | | | | | |
| **BRAVO II (2007>2009) (.../...)** | | | | | | | | | | |
| 1.9 MJTD,1.9 MJTD 16V 198/AXB1/AXC1/AXD1 AXE1 | D | 1910 | 192A1.000,192A8.000,192B5.000 937A5.000 | M | | | 02/07 ▸ 12/09 | 51783791 | **818824** | 572 132 | ALB |
| **CROMA II (2005>2007)** | | | | | | | | | | |
| 1.9 JTD,1.9 JTD Multijet 16V 194/AXB1/AXC1/BXB1 | D | 1910 | 939A1.000,939A2.000 | M | | | 06/05 ▸ 10/07 | 51770417 | **818722** | 648,4 414,5 | ALM |
| 1.9 JTD Multijet 16V 194AXC1 | D | 1910 | 939A2.000 | A | | | 06/05 ▸ 10/07 | 51770436 | **817730** | 647 400 | ALB |
| 2.4 JTD Multijet 20V 194AXD1 | D | 2387 | 939A3.000/F | A | | | 06/05 ▸ 10/07 | 51749913 | **•818721** | 647 400 | ALB |
| 2.4 JTD Multijet 20V 194AXD1 | D | 2387 | 939A3.000/F | A | | | 06/05 ▸ 10/07 | 51782907 | **•818830** | 647 400 | ALB |
| **GRANDE PUNTO (2005>2008)** | | | | | | | | | | |
| 1.4 MPi 16V 199/AXG1/AXM1/BX BXG1 | E | 1368 | 198A4.000,199A6.000,199A8.000 | M | | | 10/05 ▸ | 51783791 | **818824** | 572 132 | ALB |
| 1.3 MJTD 16V 199/AXC1/BXC1/DXC1 | D | 1248 | 199A9.000 | M | | | 10/05 ▸ 01/08 | 55702237 | **818823** | 450 100 | ALB |
| 1.6 MJTD 16V 199/AXS1/BXS1 | D | 1598 | 955A3.000/F | M | | | 01/09 ▸ | 51783791 | **818824** | 572 132 | ALB |
| 1.9 JTD 199/AXE1/BXE1 | D | 1910 | 199A5.000,939A1.000,939A7.000 | M | | | 10/05 ▸ 01/08 | 51783791 | **818824** | 572 132 | ALB |
| **IDEA (2003>2007)** | | | | | | | | | | |
| 1.3 JTD Multijet 16V 350AXB1 | D | 1248 | 188A9.000 | M | | | 10/03 ▸ 06/07 | 46836770 | **817882** | 193 207 | ALB |
| 1.9 JTD 350AXC1 | D | 1910 | 188B2.000 | M | | | 02/04 ▸ 06/07 | 46831804 | **818726** | 192 209 | ALB |
| **IDEA (2007>)** | | | | | | | | | | |
| 1.6 MJTD 350AXH1 | D | 1598 | 350A2.000/F | M | | | 07/08 ▸ | 46831804 | **818726** | 192 209 | ALB |
| **MAREA** | | | | | | | | | | |
| 1.9 TD 185/AXE/BXE | D | 1910 | 182A7.000 | M | | | 07/96 ▸ 01/99 | 46440215 | **817881** | 295 202 | ALB |
| 2.4 JTD,2.4 TD 185/AXG/AXQ1/BXG BXQ1 | D | 2387 | 185A2.000,185A6.000 | M | | | 07/96 ▸ 09/02 | 46440215 | **817881** | 295 202 | ALB |
| **MULTIPLA (98>2003)** | | | | | | | | | | |
| 1.9 JTD 186/AXB1/AXD1/AXE1 | D | 1910 | 182B4.000,186A6.000,186A8.000 | M | | | 11/98 ▸ 06/04 | 46440215 | **817881** | 295 202 | ALB |
| **PUNTO II (2003>)** | | | | | | | | | | |
| 1.3 JTD 16V 188CXH1 | D | 1248 | 188A9.000 | M | | | 07/03 ▸ 01/08 | 51783791 | **818824** | 572 132 | ALB |
| 1.3 JTD 16V 188/AXH1/BXH1 | D | 1248 | 188A9.000 | M | | | 07/03 ▸ 08/09 | 46836770 | **817882** | 193 207 | ALB |
| **STILO (2001>2004)** | | | | | | | | | | |
| 1.9 JTD 192/AXE1/BXE1/CXE1 DXE1 | D | 1910 | 192A1.000 | M | | | 09/01 ▸ 12/03 | 46745841 | **817879** | 240 175 | ALB |
| **STILO (2004>)** | | | | | | | | | | |
| 1.9 JTD,1.9 JTD Multijet 16V 192/3/54/5J8/AXE1 AXG1/AXL1/BXE1/BXG1/BXL1/CXE1/CXG1/CXL1/DXE1 DXF1 | D | 1910 | 192A1.000,192A3.000,192A5.000 937A4.000 | M | | | 01/04 ▸ 01/08 | 46745841 | **817879** | 240 175 | ALB |
| **TEMPRA** | | | | | | | | | | |
| 1.9 TD 159/AQ54/AQ55 | D | 1929 | 160D1.000 | M | | | 03/93 ▸ 1996 | 7626413 | | 295 202 | ALB |
| **TIPO** | | | | | | | | | | |
| 1.9 TD 160EL55 | D | 1929 | 160D1.000 | M | | | 03/93 ▸ 1995 | 7626413 | | 295 202 | ALB |
| **ULYSSE (94>98)** | | | | | | | | | | |
| 2.0 ie Turbo 220/AD5/CD5 | E | 1998 | RGX | M | | | 06/94 ▸ 09/98 | 1472059080 | **816851** | 680 322 | ALM |
| 1.9 TD 220/AE5/AE5U/AH5/AHX | D | 1905 | XUD9TEF,XUD9TEF/K,XUD9TEF/L3 | M | | | 06/94 ▸ 09/98 | 1472059080 | **816851** | 680 322 | ALM |
| 2.1 TD 220/AJ5/AJ5U | D | 2088 | P8C | M | | | 03/96 ▸ 09/98 | 1472059080 | **816851** | 680 322 | ALM |
| **ULYSSE (98>2002)** | | | | | | | | | | |
| 2.0 ie Turbo 220/AD5/CD5 | E | 1998 | RGX | M | | | 10/98 ▸ 08/02 | 1472059080 | **816851** | 680 322 | ALM |
| 1.9 TD 220/AE5/AH5/AHX | D | 1905 | XUD9TEF/K,XUD9TEF/L3 | M | | | 10/98 ▸ 08/02 | 1472059080 | **816851** | 680 322 | ALM |
| 2.0 JTD,2.0 JTD 16V 220/AN5/AR50 | D | 1997 | DW10ATED4,DW10BTED+L4 | M | | | 10/99 ▸ 08/02 | 1472059080 | **816851** | 680 322 | ALM |
| 2.1 TD 220AJ5 | D | 2088 | P8C | M | | | 10/98 ▸ 08/02 | 1472059080 | **816851** | 680 322 | ALM |
| **ULYSSE (2002>)** | | | | | | | | | | |
| 2.0 JTD 16V 179BXB1 | D | 1997 | DW10ATED4 | M | | | 09/02 ▸ 07/06 | 1489396080 | **817650** | 376 133,6 | ALB |
| 2.0 JTD 16V 179BXF1 | D | 1997 | DW10ATED4 | A | | | 03/03 ▸ 10/06 | 1489396080 | **817650** | 376 133,6 | ALB |
| 2.2 JTD 16V 179BXC1 | D | 2179 | DW12ATED4/L4 | M | | | 09/02 ▸ 02/04 | 1489396080 | **817650** | 376 133,6 | ALB |
| **UNO (83>89)** | | | | | | | | | | |
| - 146/AM53/AM55/BM53 | E | 1301 | 146A2.000 | M | | | 03/85 ▸ 1989 | 7660938 | | 184 125 | ALB |

Charge Air Cooler Refroidisseur d'air de suralimentation Ladeluftkühler Intercooler Intercooler Turbo Radyatörü
Intercooler Охладитель всасываемого воздуха töltőlevegő hűtő Intercooler Intercooler Intercooler



• **New** Nouveau **Nuevo** Novo **Nuovo** Nieuw **Neu** Nowość **Yeni** Новый Νέο **Novy**

| Type Ctr. | | CC | | AC | | | OE | Valeo | DIM. | TECH |
|---|---|---|---|---|---|---|---|---|---|---|
| **FIAT (.../...)** | | | | | | | | | | |
| **UNO (83>89) (.../...)** | | | | | | | | | | |
| - 16A65CT ; 146/A653/A655 | D | 1367 | 146B3.000 | M | | | 04/86 ▸ 1989 | 7660937 | | 235 125 | ALB |
| **UNO (89>95)** | | | | | | | | | | |
| - 146/ER53/EU53 | E | 1372 | 146A8.000,146A8.046 | M | | | 10/89 ▸ 09/93 | 7660938 | | 184 125 | ALB |
| **FIAT** | | | | | | | | | | |
| **DOBLO (2000>2003)** | | | | | | | | | | |
| 1.9 JTD 223AXE1 | D | 1910 | 182B9.000 | M | | | 10/01 ▸ 12/03 | 51718953 | **818712** | 500 70 | ALB |
| **DOBLO (2004>2005)** | | | | | | | | | | |
| 1.3 MTJ 16V 223AXG1 | D | 1248 | 188A9.000 | M | | | 01/04 ▸ 12/05 | 46849068 | **818711** | 500 85 | ALB |
| **DOBLO II (2006>)** | | | | | | | | | | |
| 1.3 MJTD 16V 223AXN1 | D | 1248 | 199A9.000 | M | | | 01/06 ▸ | 51718953 | **818712** | 500 70 | ALB |
| 1.9 MJTD 8V 223/AXH1/AXL1 | D | 1910 | 186A9.000,223B1.000 | M | | | 01/06 ▸ | 51718953 | **818712** | 500 70 | ALB |
| **DOBLO CARGO (2000>2003)** | | | | | | | | | | |
| 1.9 JTD 223/AXE1/ZXE1 | D | 1910 | 182B9.000 | M | | | 10/01 ▸ 12/03 | 51718953 | **818712** | 500 70 | ALB |
| **DOBLO CARGO (2004>2005)** | | | | | | | | | | |
| 1.3 MTJ 16V 223ZXG1 | D | 1248 | 188A9.000 | M | | | 01/04 ▸ 12/05 | 46849068 | **818711** | 500 85 | ALB |
| 1.9 JTD 223/AXF1/WXF1/ZXF1 | D | 1910 | 182B9.000 | M | | | 01/04 ▸ 08/05 | 46849068 | **818711** | 500 85 | ALB |
| **DOBLO CARGO II (2006>)** | | | | | | | | | | |
| 1.3 MJTD 16V 223/WXN1/ZXN1 | D | 1248 | 199A9.000 | M | | | 01/06 ▸ | 51718953 | **818712** | 500 70 | ALB |
| 1.9 MJTD 223/WXL1/WXR1/ZXR1 | D | 1910 | 223B2.000 | M | | | 01/06 ▸ | 51718953 | **818712** | 500 70 | ALB |
| **DUCATO (230) (94>2001)** | | | | | | | | | | |
| 1.9 TD 230/0NMQ/ANMA/ANMF ANMP/ANMQ/BLMA/BNMA/BNMF/BNMM/BNMQ/ENMF | D | 1905 | XUD9TEF/W3 | M | | | 06/98 ▸ 12/01 | 1340934080 | **817632** | 295 202 | ALB |
| 1.9 TD 230/ABMA/ABMB/ABMD ABMF/ABMP/ABMQ/ABMR/ACMA/ACMD/ACMF/BBMA/BBMD BBMF/BBMN/BBMP/BBMQ/BBMR/BCMA/BCMD/BCMF/BCMQ EBMF | D | 1929 | 230A3.000,230A4.000 | M | | | 02/94 ▸ 12/01 | 1340934080 | **817632** | 295 202 | ALB |
| 1.9 TD 230/ABMA/ABMB/ABMD ABMF/ABMP/ABMQ/ABMR/ACMA/ACMD/ACMF/BBMA/BBMD BBMF/BBMN/BBMP/BBMQ/BBMR/BCMA/BCMD/BCMF/BCMQ EBMF | D | 1929 | 230A3.000,230A4.000 | M | | | 02/94 ▸ 12/01 | 1307012080 | **817632** | 295 202 | ALB |
| 2.5 TD 230/AEMP/AEMT/AEMU AFMP/BEMA/BEMB/BEMD/BEMF/BEMG/BEMH/BEMN/BEMQ BEMR/BEMT/BFMA/BFMB/BFMD/BFMF/BFMG/BFMH/BFMN BFMQ/BFMR/BFMS/BLWF/CDMA/CDMF/CEMA/CEMB/CEMD CEME/CEMF/CEMG/CEMH/CEML/CEMM/CEMN/CFMA/CFMB CFMD/CFMF/CFMG/CFMH/CFMN | D | 2499 | 8140-47,8140-47R | M | | | 02/94 ▸ 12/01 | 1307012080 | **817632** | 295 202 | ALB |
| 2.5 TD 230/AEMP/AEMT/AEMU AFMP/BEMA/BEMB/BEMD/BEMF/BEMG/BEMH/BEMN/BEMQ BEMR/BEMT/BFMA/BFMB/BFMD/BFMF/BFMG/BFMH/BFMN BFMQ/BFMR/BFMS/BLWF/CDMA/CDMF/CEMA/CEMB/CEMD CEME/CEMF/CEMG/CEMH/CEML/CEMM/CEMN/CFMA/CFMB CFMD/CFMF/CFMG/CFMH/CFMN | D | 2499 | 8140-47,8140-47R | M | | | 02/94 ▸ 12/01 | 1340934080 | **817632** | 295 202 | ALB |
| 2.8 JTD,2.8 TDi 230/ALMP/ALMT/ALWP ALWT/APMF/APMP/APWP/BLMA/BLMF/BLMH/BLMM/BLMN BLMP/BLMQ/BLMS/BLMT/BLMU/BLWA/BLWF/BLWN/BLWQ BLWS/BLWT/BPMA/BPMF/BPMN/BPMP/BPMS/BPMT/BPWD BPWF/CEMN/CIWH/CLMA/CLMB/CLME/CLMF/CLMH/CLML CLMM/CLMN/CLWA/CLWF/CLWG/CLWH/CLWN/CPMA/CPME CPMF/CPML/C | D | 2798 | 8140-43,8140-43S | M | | | 01/98 ▸ 12/01 | 1340934080 | **817632** | 295 202 | ALB |
| 2.8 JTD 230 | D | 2798 | 8140-43S | A | | | 05/01 ▸ 12/01 | 1340934080 | **817632** | 295 202 | ALB |
| **DUCATO (2002>2006)** | | | | | | | | | | |
| 2.3 JTD 244/ASMF/ASMN/ASMP ASMR/BSMA/BSMF/BSMH/BSMN/BSMP/BSMR/BSMS/BSMT CSMF | D | 2287 | F1AE0481C | M | | | 01/02 ▸ 06/06 | 1340934080 | **817632** | 295 202 | ALB |
| 2.8 JTD,2.8 TD 244/APMF/APMN/APMP APMR/APWP/BPMA/BPMF/BPMH/BPMN/BPMP/BPMR/BPMS BPMT/BPNS/BPWN/BPWR/CPMF/CPMN/CPWN | D | 2798 | 8140-43,8140-43N,8140-43S | M | | | 01/02 ▸ 06/06 | 1340934080 | **817632** | 295 202 | ALB |

| Type Ctr. | | CC | | AC | | | OE | Valeo | DIM. | TECH |
|---|---|---|---|---|---|---|---|---|---|---|
| **FIAT** (.../...) | | | | | | | | | | |
| **DUCATO RU (2008>)** | | | | | | | | | | |
| 2.3 JTD 16V 245 ; 244//ASMF | D | 2287 | F1AE0481C | M | | | 01/08 ▸ | 1340934080 | **817632** | 295 202 ALB |
| **SCUDO (95>2003)** | | | | | | | | | | |
| 1.9 TD 220/WH5C/XE5/XE59 XH5/XH51/XH5A/XH5B/XH50/YE5/YH5/YH5C/ZE5 ZE5A/ZH5/ZH5A/ZH5B | D | 1905 | XUD9TEF/K,XUD9TEF/L3,XUD9TEF/W3 | M | | | 07/95 ▸ 05/00 | 1472059080 | **816851** | 680 322 ALM |
| 2.0 JTD,2.0 JTD 16V 220/XN50/XP50/XR5A XR5B/YP5A/ZP5/ZP5A | D | 1997 | DW10ATED4,DW10BTED DW10BTED+L4 | M | | | 02/00 ▸ 12/03 | 1472059080 | **816851** | 680 322 ALM |
| **SCUDO (2004>2006)** | | | | | | | | | | |
| 2.0 JTD,2.0 JTD 16V 220/KP5A/YP5R/YV5R ZP5R/ZV5R ; 222/0ZP5/0ZPS/0ZV5/KR5A | D | 1997 | DW10ATED4,DW10BTED DW10BTED+L4 | M | | | 01/04 ▸ 12/06 | 1472059080 | **816851** | 680 322 ALM |
| **FORD** | | | | | | | | | | |
| 2.0 TCDCi 16V | D | 1997 | D20TDCIFAP | M | | | 07/06 ▸ 04/08 | 1353523 | **818717** | 601 143 ALB |
| **FIESTA (99>2002)** | | | | | | | | | | |
| 1.8 TDdi JAS ; JBS | D | 1753 | DI-TD | M | | | 02/00 ▸ 03/02 | 1227171 | **817888** | 338 127 ALB |
| **FIESTA (2002>2005)** | | | | | | | | | | |
| 1.6 TDCi 16V NH | D | 1560 | HHDA/B | M | | | 11/04 ▸ 09/05 | 1337624 | **818797** | 450 152 ALB |
| **FIESTA (2005>)** | | | | | | | | | | |
| 1.6 TDCi 16V | D | 1560 | HHJA/B | M | | | 10/05 ▸ 11/08 | 1337624 | **818797** | 450 152 ALB |
| **FIESTA (2008>)** | | | | | | | | | | |
| 1.6 TDCi 16V | D | 1560 | 1.6DQ DI SOHC | M | | | 11/08 ▸ | 1722905 | **•818241** | 290 147,4 ALB |
| **FOCUS (98>2001)** | | | | | | | | | | |
| 1.8 TDi DBW ; DFW ; DNW DAW | D | 1753 | BHDA/B,C9DA/B/C | M | | | 10/98 ▸ 10/01 | 1227171 | **817888** | 338 127 ALB |
| 1.8 TDi DBW ; DFW ; DNW DAW | D | 1753 | BHDA/B,C9DA/B/C | M | | | 10/98 ▸ 10/01 | 1084781 | **817888** | 338 127 ALB |
| **FOCUS (2001>2003)** | | | | | | | | | | |
| 1.8 TDdi DBW ; DFW ; DNW DAW | D | 1753 | BHDA/B,C9DA/B/C | M | | | 11/01 ▸ 08/04 | 1227171 | **817888** | 338 127 ALB |
| 1.8 TDdi DBW ; DFW ; DNW DAW | D | 1753 | BHDA/B,C9DA/B/C | M | | | 11/01 ▸ 12/02 | 1084781 | **817888** | 338 127 ALB |
| **FOCUS (2004>)** | | | | | | | | | | |
| 2.5 i 20V | E | 2521 | 2.5 DURATEC | M | | | 10/05 ▸ 12/07 | 1353523 | **818717** | 601 143 ALB |
| 1.6 TDCi 16V | D | 1560 | D16FAP,HHDA/B | M | | | 09/04 ▸ | 1316496 | **818717** | 601 143 ALB |
| 1.6 TDCi 16V | D | 1560 | D16FAP,HHDA/B | M | | | 09/04 ▸ 12/07 | 1353523 | **818717** | 601 143 ALB |
| 1.6 TDCi 16V | D | 1560 | HHDA/B | A | | | 09/04 ▸ | 1316496 | **818717** | 601 143 ALB |
| 1.6 TDCi 16V | D | 1560 | HHDA/B | A | | | 09/04 ▸ 12/07 | 1353523 | **818717** | 601 143 ALB |
| 1.8 TDCi | D | 1753 | KKDA | M | | | 11/04 ▸ 12/07 | 1421281 | **818717** | 601 143 ALB |
| 2.0 TDCi 16V | D | 1997 | D20TDCI,D20TDCIFAP | M | | | 09/04 ▸ | 1316496 | **818717** | 601 143 ALB |
| 2.0 TDCi 16V | D | 1997 | D20TDCI,D20TDCIFAP | M | | | 09/04 ▸ 12/07 | 1353523 | **818717** | 601 143 ALB |
| **FOCUS II (2007>)** | | | | | | | | | | |
| 2.5 T 20V | E | 2521 | 2.5 DURATEC | M | | | 12/07 ▸ | 1429405 | **•818246** | |
| 1.6 TDCi,1.6 TDCi 110,1.6 TDCi 90 | D | 1560 | 1.6 DQ TDCI,G8DA,G8DB | M | | | 12/07 ▸ | 1429405 | **•818246** | |
| 1.8 TDCi | D | 1753 | 1.8 TC LYNX | M | | | 12/07 ▸ 04/10 | 1421281 | **818717** | 601 143 ALB |
| 1.8 TDCi | D | 1753 | 1.8 TC LYNX | M | | | 12/07 ▸ 04/10 | 1353523 | **818717** | 601 143 ALB |
| 2.0 TDCi | D | 1997 | 2.0 DURATORQ,2.0 DURATORQ/F | M | | | 12/07 ▸ | 1429405 | **•818246** | |
| **FOCUS II FL** | | | | | | | | | | |
| 2.5 T 20V | E | 2521 | 2.5 DURATEC-RS | M | | | 01/09 ▸ 08/10 | 1674066 | **•818245** | 659,5 165 ALB |
| **FOCUS C-MAX (03>07)** | | | | | | | | | | |
| 1.6 TDCi 16V DMIF ; DMJF ; DMB/F | D | 1560 | HHDA/B | M | | | 10/03 ▸ | 1231015 | **818717** | 601 143 ALB |
| 1.6 TDCi 16V DMBF ; DMIF ; DMJF DM | D | 1560 | D16FAP,HHDA/B | M | | | 10/03 ▸ 02/07 | 1353523 | **818717** | 601 143 ALB |
| 1.6 TDCi 16V DMIF ; DMJF ; DMB/F | D | 1560 | HHDA/B | M | | | 10/03 ▸ | 1316496 | **818717** | 601 143 ALB |
| 1.6 TDCi 16V DMIG ; DMJG | D | 1560 | HHDA/B | A | | | 10/03 ▸ | 1316496 | **818717** | 601 143 ALB |

Charge Air Cooler Refroidisseur d'air de suralimentation Ladeluftkühler Intercooler Intercooler Turbo Radyatörü
Intercooler Охладитель всасываемого воздуха töltőlevegő hűtő Intercooler Intercooler Intercooler



• **New** Nouveau **Nuevo** Novo **Nuovo** Nieuw **Neu** Nowość **Yeni** Новый Νέο **Novy**

| Type Ctr. | | CC | | AC | | | OE | Valeo | DIM. | TECH |
|---|---|---|---|---|---|---|---|---|---|---|
| **FORD (.../...)** | | | | | | | | | | |
| **FOCUS C-MAX (03>07) (.../...)** | | | | | | | | | | |
| 1.6 TDCi 16V DMIG ; DMJG | D | 1560 | HHDA/B | A | | | 10/03 ▸ | 1231015 | **818717** | 601 143 ALB |
| 1.6 TDCi 16V DMIG ; DMJG | D | 1560 | D16FAP,HHDA/B | A | | | 10/03 ▸ 02/07 | 1353523 | **818717** | 601 143 ALB |
| 1.8 TDCi | D | 1753 | KKDA | M | | | 01/05 ▸ 02/07 | 1353523 | **818717** | 601 143 ALB |
| 2.0 TDCi 16V DMII ; DMJI | D | 1997 | D20TDCI | M | | | 10/03 ▸ 02/07 | 1231015 | **818717** | 601 143 ALB |
| 2.0 TDCi 16V DMII ; DMJI ; DM | D | 1997 | D20TDCI,D20TDCIFAP | M | | | 10/03 ▸ 02/07 | 1353523 | **818717** | 601 143 ALB |
| 2.0 TDCi 16V DMII ; DMJI ; DM | D | 1997 | D20TDCI | M | | | 10/03 ▸ | 1316496 | **818717** | 601 143 ALB |
| **FOCUS C-MAX (2007>)** | | | | | | | | | | |
| 1.6 TDCi 16V | D | 1560 | 1.6 DQ TDCI,G8DB | M | | | 03/07 ▸ 08/10 | 1353523 | **818717** | 601 143 ALB |
| 1.8 TDCi | D | 1753 | 1.8 TC LYNX | M | | | 03/07 ▸ 08/10 | 1353523 | **818717** | 601 143 ALB |
| 2.0 TDCi 16V | D | 1997 | 2.0 DURATORQ,2.0 DURATORQ/F | M | | | 02/07 ▸ 08/10 | 1353523 | **818717** | 601 143 ALB |
| **FUSION (2002>2005)** | | | | | | | | | | |
| 1.6 TDCi 16V | D | 1560 | HHDA/B | M | | | 11/04 ▸ 09/05 | 1337624 | **818797** | 450 152 ALB |
| **FUSION (2005>)** | | | | | | | | | | |
| 1.6 TDCi 16V | D | 1560 | HHJA/B | M | | | 10/05 ▸ | 1337624 | **818797** | 450 152 ALB |
| **GALAXY (95>2000)** | | | | | | | | | | |
| 1.9 TDi WGR/1Z1/AFN | D | 1896 | 1.9N,1.9P | M | | | 11/95 ▸ 03/00 | 1020622 | **817936** | 500 67 ALB |
| **GALAXY (2000>2006)** | | | | | | | | | | |
| 1.9 TDi | D | 1896 | 1.9TC,1.9TI | M | | | 04/00 ▸ 04/06 | 1109138 | **817936** | 500 67 ALB |
| 1.9 TDi | D | 1896 | 1.9TC | A | | | 04/00 ▸ 04/06 | 1109138 | **817936** | 500 67 ALB |
| **GALAXY CA1 (2006>)** | | | | | | | | | | |
| 2.5 i 20V | E | 2521 | 2.5 DURATEC | M | | | 04/06 ▸ 04/10 | 1433631 | **•818240** | 659,5 147,4 ALB |
| **GRANADA (92>95)** | | | | | | | | | | |
| 2.5 TDi GAE | D | 2500 | SCB | M | | Left/gauche | 09/93 ▸ 01/95 | 1051768 | | 330 127 ALB |
| **KUGA** | | | | | | | | | | |
| 2.0 TDCi 136 | D | 1997 | 2.0 DURATORQ/F | M | | | 04/08 ▸ 03/10 | 1429405 | **•818246** | |
| **MONDEO (2000>2003)** | | | | | | | | | | |
| 2.0 DI 16V,2.0 TDCi 16V 2.0 TDDI 16V WFO/AXX/FXX/NXX | D | 1998 | 2.0 DURATORQ DI,D5BA,FMBA | M | | | 10/00 ▸ 05/03 | 1124704 | **817238** | 412 107 ALB |
| 2.0 TDCi 16V WFOFXX | D | 1998 | FMBA | A | | C | 10/01 ▸ 05/03 | 1124704 | **817238** | 412 107 ALB |
| **MONDEO III (2007>)** | | | | | | | | | | |
| 2.5 20V | E | 2521 | 2.5 DURATEC | M | | | 06/07 ▸ 03/10 | 1433631 | **•818240** | 659,5 147,4 ALB |
| 1.8 TDCi | D | 1753 | 1.8 TC LYNX,1.8 TCD LYNX | M | | | 06/07 ▸ 09/10 | 1429406 | **•818239** | 658 147 |
| 2.0 TDCi | D | 1997 | 2.0 DURATORQ/F,2.0TDCIDURATORQ | M | | | 06/07 ▸ 03/10 | 1429406 | **•818239** | 658 147 |
| 2.0 TDCi | D | 1997 | 2.0TDCIDURATORQ | A | | | 06/07 ▸ 03/10 | 1429406 | **•818239** | 658 147 |
| **SCORPIO (92>94)** | | | | | | | | | | |
| 2.5 TD GFK ; GNM ; GAE | D | 2499 | SFA | M | | | 02/92 ▸ 09/94 | 1051768 | | 330 127 ALB |
| 2.5 TD GFK ; GNM ; GAE | D | 2500 | SCB | M | | | 09/93 ▸ 10/94 | 1051768 | | 330 127 ALB |
| **SCORPIO (94>98)** | | | | | | | | | | |
| 2.5 TD GFR ; GNR | D | 2500 | SCC,SCD | M | | | 10/94 ▸ 07/98 | 1051768 | | 330 127 ALB |
| **S-MAX (2006>2010)** | | | | | | | | | | |
| 2.5 i Turbo 20V | E | 2521 | 2.5 DURATEC | M | | | 04/06 ▸ 06/10 | 1433631 | **•818240** | 659,5 147,4 ALB |
| **FORD** | | | | | | | | | | |
| **TRANSIT (95>99)** | | | | | | | | | | |
| 2.5 TD | D | 2496 | 4EB,4EC,4ED,4GA,4GB,4GC,4GD 4GE | M | | | 09/94 ▸ 12/99 | 1055674 | | 234 172 ALB |
| 2.5 TD | D | 2496 | 4GA,4GB,4GC,4GD,4GE | A | | | 09/94 ▸ 12/99 | 1055674 | | 234 172 ALB |
| **TRANSIT (2000>)** | | | | | | | | | | |
| 2.0 TDci,2.0 TDdi FAFYD3 ; FAGYD3 FM ; FAE/YD3 | D | 1998 | D3FA-E3,FIFA | M | | | 08/00 ▸ 12/06 | 4522847 | **817891** | 398 127 ALB |
| 2.0 TDdi FAFYAB ; FAGYAB FAE/YAB | D | 1998 | ABFA | M | | | 08/00 ▸ | 4432117 | **818802** | 400 127 ALB |

| Type Ctr. | | CC | | AC | | | OE | Valeo | DIM. | TECH |
|---|---|---|---|---|---|---|---|---|---|---|
| **FORD (.../...)** | | | | | | | | | | |
| **TRANSIT (2000>) (.../...)** | | | | | | | | | | |
| 2.0 TDdi FAFYAB ; FAGYAB FM ; FAE/YAB | D | 1998 | ABFA,F3FA | M | | | 08/00 ▸ 12/06 | 4522846 | **818802** | 400 127 ALB |
| 2.4 TDCi,2.4 TDI,2.4 TDdi FBY ; FA ; F/ ; FAB Y/YD2/YD4/YF4 ; FAC/Y/YD2/YD4/YF4 ; FD ; FM FAD/Y/YD2/YD4/YF4 ; FMA/Y/YD2/YD4/YF4 ; FMB Y/YD2/YD4/YF4 ; FMC//Y/YD2/YD4/YF4 ; FMD/Y YD2/YD4/YF4 ; FNB/J/JD2/JD4/JF4 ; FNC/J/JD2 JD4/JF4 ; FND/J/JD2/JD4/JF4 | D | 2402 | D2FA,D4FA,DOFE,F4FA,FXFA,H9FA | M | | | 01/00 ▸ 12/06 | 4522532 | **818800** | 415 127 ALB |
| **TRANSIT (2006>)** | | | | | | | | | | |
| 2.4 TDCi 100,2.4 TDCi 115,2.4 TDCi 120 2.4 TDCi 140 | D | 2402 | H9FC,HPFB,JXFA,JXFB,PHFA,PHFB | M | | | 04/06 ▸ | 4164696 | **818225** | |
| **IVECO** | | | | | | | | | | |
| **DAILY (89>96)** | | | | | | | | | | |
| 2.5 TD | D | 2499 | 8140.27S,8140.47 | M | | C | 03/89 ▸ 03/96 | 93817393 | **817941** | 630 215 ALB |
| 2.5 TD 1301 | D | 2499 | 8140.27S,8140.47 | M | | C | 03/89 ▸ 03/96 | 93822907 | **817941** | 630 215 ALB |
| **DAILY (96>99)** | | | | | | | | | | |
| 2.5 TD 1553 | D | 2499 | 8140.47R | M | | C | 04/96 ▸ 05/99 | 93817393 | **817941** | 630 215 ALB |
| 2.5 TD 1553 | D | 2499 | 8140.47R | M | | C | 04/96 ▸ 05/99 | 93822907 | **817941** | 630 215 ALB |
| **DAILY (99>)** | | | | | | | | | | |
| 2.3 TD AEKB ; AHJA ; AMJA AMKA ; AGKB ; ANKA ; ANJA ; ALJA ; AGJB AHKA ; AEJB ; ALKA | D | 2287 | F1AE0481A,F1AE0481B | M | | | 06/02 ▸ | 504022617 | **818724** | 475 185 ALB |
| 2.3 TD ALKA ; AHKA ; AMJA AEKB ; ALJA ; AMKA ; AGKB ; AHJA ; ANKA ANJA ; AEJB ; AGJB | D | 2287 | F1AE0481A,F1AE0481B | M | | | 06/02 ▸ | 504086501 | **818724** | 475 185 ALB |
| 2.3 TD AEJB ; AHJA ; ANJA AGJB ; AMJA ; ALJA | D | 2287 | F1AE0481A | M | | | 06/02 ▸ 04/06 | 504084140 | **818724** | 475 185 ALB |
| 2.8 TD A1BA ; A7BB ; A2CA A4DB ; A1HA ; A8HB ; A6CA ; A5FA ; A1FA A7HB ; A6BA ; A2BA ; A3FB ; A1CA ; A2HB A5HA ; A5CA ; A6FA ; A3CB ; A5BA ; A5GA A7FB ; A3BB ; A3HB ; A2FA ; A1H6 ; AHB1 A6HB ; A6GA ; A6AB | D | 2798 | 8140-43B,8140-43C,8140-43N 8140-43S | M | | | 05/99 ▸ | 504022617 | **818724** | 475 185 ALB |
| 2.8 TD A3CB ; A2BA ; A7BB A3HB ; A2HB ; A4DB ; A5BA ; A3BB ; A1BA A2FA ; A7FB ; A6FA ; A5CA ; A2CA ; A6GA A7HB ; A1CA ; A5HA ; A1FA ; A6BA ; A3FB A6CA ; A8HB ; A1H6 ; A1HA ; A5FA ; A6HB A6AB ; A5GA ; AHB1 | D | 2798 | 8140-43B,8140-43C,8140-43N 8140-43S | M | | | 05/99 ▸ | 504086501 | **818724** | 475 185 ALB |
| **DAILY (2006>2009)** | | | | | | | | | | |
| 2.3 TD 116,2.3 TD 136,2.3 TD 96 | D | 2287 | F1AE0481F,F1AE0481G,F1AE0481H | M | | | 04/06 ▸ 06/09 | 504084140 | **818724** | 475 185 ALB |
| 3.0 TD 146,3.0 TD 176 | D | 2998 | F1CE0481F,F1CE0481H | M | | | 04/06 ▸ 06/09 | 504084140 | **818724** | 475 185 ALB |
| **JAGUAR** | | | | | | | | | | |
| **X-TYPE (2001>2008)** | | | | | | | | | | |
| 2.0 D 16V | D | 1998 | X404 | M | | | 09/03 ▸ 02/08 | C2S31600 | | 601 130 ALB |
| 2.2 D 16V | D | 2198 | DURATQ22 | M | | | 06/05 ▸ 02/08 | C2S31600 | | 601 130 ALB |
| **LANCIA** | | | | | | | | | | |
| **DEDRA** | | | | | | | | | | |
| 2.0 ie Turbo 835/AO54W/AP54W AQ54A/AR54A | E | 1995 | 835A7.000,835A7.046,835A8.000 835A8.046 | M | | | 12/90 ▸ 06/94 | 7626413 | | 295 202 ALB |
| 2.0 ie 835AL44A | E | 1995 | 835A5.046 | A | | | 12/90 ▸ 06/94 | 7626413 | | 295 202 ALB |
| 1.9 TDs 835/AG54A/AG54A AS54A/EE54A/EE55B/EF54A/EF55B | D | 1929 | 160D1.000,835A4.000 | M | | | 03/89 ▸ 09/99 | 7626413 | | 295 202 ALB |
| **DELTA (86>93)** | | | | | | | | | | |
| 2.0 i Turbo,2.0 i Turbo 16S 831/AB019/AB024 AB024P/AB024S/AB026/AB027/AB028/AB029 | E | 1995 | 831B5.000,831C5.000,831C5.046 831D5.000,831E5.000,831E5.046 | M | | | ▸ 1994 | 82454278 | | 310 202 ALB |

Charge Air Cooler Refroidisseur d'air de suralimentation Ladeluftkühler Intercooler Intercooler Turbo Radyatörü
Intercooler Охладитель всасываемого воздуха töltőlevegő hűtő Intercooler Intercooler Intercooler



• **New** Nouveau **Nuevo** Novo **Nuovo** Nieuw **Neu** Nowość **Yeni** Новый Νέο **Nový**

| Type Ctr. | | CC | | AC | | | OE | Valeo | DIM. | | TECH |
|---|---|---|---|---|---|---|---|---|---|---|---|
| **LANCIA (.../...)** | | | | | | | | | | | |
| **DELTA (93>99)** | | | | | | | | | | | |
| 1.9 TD 836/AM53A/AM55A AN53A/AN55A | D | 1929 | 160D1.000,835A4.000 | M | | | 06/94 ▸ 08/99 | 7626413 | | 295 | 202 ALB |
| **KAPPA** | | | | | | | | | | | |
| 2.0 ie Turbo 16V 838/AB1AA/BB1AA CB1AA/XB1AA | E | 1995 | 834A4.000,838A4.000 | M | | | 07/95 ▸ 10/01 | 7799414 | | 302 | 187 ALB |
| 2.0 ie Turbo 20V 838/BM1AA/CM1AA | E | 1998 | 175A3.000 | M | | | 05/98 ▸ 10/01 | 7799414 | | 302 | 187 ALB |
| **LYBRA** | | | | | | | | | | | |
| 1.9 JTD 839/AXD1A0/AXI1A BXD1A0/BXI1A | D | 1910 | 937A2.000,AR32302,AR37101 | M | | Right/Droite | 09/99 ▸ | 46444726 | **817901** | 240 | 202 ALB |
| 2.4 JTD 839/AXE1A/AXE1A0 AXL1A/BXE1A/BXE1A0/BXL1A | D | 2387 | 839A5.000,839A6.000,AR32501 | M | | | 09/99 ▸ | 46444726 | **817901** | 240 | 202 ALB |
| **MUSA (2004>2006)** | | | | | | | | | | | |
| 1.3 JTD Multijet 16V 350/AXB11/AXB1A AXG1A | D | 1248 | 188A9.000,199A3.000 | M | | | 07/04 ▸ 09/07 | 46836770 | **817882** | 193 | 207 ALB |
| **MUSA (2007>)** | | | | | | | | | | | |
| 1.3 MJTD 16V 350/AXB1A/AXG1A | D | 1248 | 188A9.000,199A3.000 | M | | | 10/07 ▸ | 46836770 | **817882** | 193 | 207 ALB |
| **PHEDRA** | | | | | | | | | | | |
| 2.0 JTD 16V 179AXE1A | D | 1997 | DW10ATED4 | A | | | 03/03 ▸ 2010 | 1489396080 | **817650** | 376 | 133,6 ALB |
| 2.2 JTD 16V 179AXC1A | D | 2179 | DW12ATED4/L4 | M | | | 09/02 ▸ 02/04 | 1489396080 | **817650** | 376 | 133,6 ALB |
| **ZETA** | | | | | | | | | | | |
| 2.0 ie Turbo 220/AD5/CD5 ▸ 8574 | E | 1998 | RGX | M | | | 10/94 ▸ 05/00 | 1472059080 | **816851** | 680 | 322 ALM |
| 2.0 JTD,2.0 JTD 16V 220/AN5/AR500L | D | 1997 | DW10ATED,DW10ATED4 | M | | | 01/00 ▸ 08/02 | 1472059080 | **816851** | 680 | 322 ALM |
| 2.1 TD 220AJ5 | D | 2088 | P8C | M | | | 03/96 ▸ | 1472059080 | **816851** | 680 | 322 ALM |
| **LAND ROVER** | | | | | | | | | | | |
| **DEFENDER 90 - 110** | | | | | | | | | | | |
| 2.5 TDi LDH/A67/A68/AF7/AF8 H67/H68/HF7/HF8/MF7/MF8 ; LDK/AF7/AF8/HF7 HF8 ; LDV/A68/AF7/AF8/B68/BF7/BF8 | D | 2494 | 11L,16L | M | | | 10/90 ▸ 09/98 | FTP8030 | **818826** | 260 | 170 ALB |
| **DISCOVERY (89>94)** | | | | | | | | | | | |
| 2.5 TDi LJG/BF7/BF8/MF7/MF8 | D | 2495 | 12L,17L | M | | | 09/89 ▸ 03/94 | FTP8030 | **818826** | 260 | 170 ALB |
| 2.5 TDi LJG/BF3/BF4/MF3/MF4 | D | 2495 | 19L | A | | | 10/92 ▸ 03/94 | FTP8030 | **818826** | 260 | 170 ALB |
| **DISCOVERY (94>98)** | | | | | | | | | | | |
| 2.5 TDi LJG//BF7/BF8/MF7/MF8 | D | 2495 | 17L | M | | | 03/94 ▸ 08/98 | FTP8030 | **818826** | 260 | 170 ALB |
| 2.5 TDi LJG//BF3/BF4/MF3/MF4 | D | 2495 | 19L | A | | | 03/94 ▸ 08/98 | FTP8030 | **818826** | 260 | 170 ALB |
| **FREELANDER 2 (2006>)** | | | | | | | | | | | |
| 3.2 i V6 24V,3.2 i V6-233 24V 8H101926 ▸ AH999999 | E | 3192 | I6 | A | | | | LR009802 | **•818249** | 659,5 | 147,4 ALB |
| 2.2 TD4 16V ▸ 8H101925 | D | 2179 | DW12,DW12/F | M | | | 02/06 ▸ 2008 | LR000926 | **•818249** | 659,5 | 147,4 ALB |
| 2.2 TD4 16V ▸ 8H101925 | D | 2179 | DW12,DW12/F | A | | | 02/06 ▸ 2008 | LR000926 | **•818249** | 659,5 | 147,4 ALB |
| 2.2 TD4 150 16V,2.2 TD4 16V 2.2 eD4 150 16V 8H101926 ▸ AH999999 | D | 2179 | DW12,DW12/F | M | | | | LR009802 | **•818249** | 659,5 | 147,4 ALB |
| 2.2 SD4 190 16V,2.2 TD4 150 16V 2.2 TD4 16V | D | 2179 | DW12,DW12/F | A | | | | LR009802 | **•818249** | 659,5 | 147,4 ALB |
| **MCC** | | | | | | | | | | | |
| **FORTWO (98>2006)** | | | | | | | | | | | |
| 0.8 CDI 450.30 ; 450.40 450.36 | D | 799 | 660.940 | M | | | 09/99 ▸ 12/06 | 00003007V005000000 | **817931** | 170 | 218 ALB |

| Type Ctr. | | CC | | AC | | | OE | Valeo | DIM. | TECH |
|---|---|---|---|---|---|---|---|---|---|---|
| **MCC** (.../...) | | | | | | | | | | |
| **FORTWO (98>2006) (.../...)** | | | | | | | | | | |
| 0.8 CDI 450.30 ; 450.40 | D | 799 | 660.940 | M | | | 09/99 ▸ 12/06 | 0002490V007000000 | **818730** | 170 218 | ALB |
| **MERCEDES** | | | | | | | | | | |
| **A CLASS (168) (97>2003)** | | | | | | | | | | |
| A160CDI CDI,A170CDI CDI 168/.006/.008/.009 .109 | D | 1689 | 668.940,668.942 | M | | | 05/98 ▸ 06/04 | 1685000000 | **817759** | 396 115 | ALB |
| A160CDI CDI,A170CDI CDI 168/.006/.008/.009 .109 | D | 1689 | 668.940,668.942 | A | | | 05/98 ▸ 06/04 | 1685000000 | **817759** | 396 115 | ALB |
| **A CLASS (169) (2004>2008)** | | | | | | | | | | |
| A160CDI CDi,A180CDI CDi A200CDI CDi 169/.006/.007/.008 .306/.307/.308 | D | 1991 | 640.940,640.941,640.942 | M | | | 07/04 ▸ 03/08 | 1695000000 | **818806** | 700 96 | ALB |
| A160CDI CDi,A180CDI CDi A200CDI CDi 169/.006/.007/.008 .306/.307/.308 | D | 1991 | 640.940,640.941,640.942 | A | | | 07/04 ▸ 03/08 | 1695000000 | **818806** | 700 96 | ALB |
| **B CLASS (2005>2008)** | | | | | | | | | | |
| B200 i 245.234 | E | 2034 | 266.980 | M | | | 05/05 ▸ 03/08 | 1695000000 | **818806** | 700 96 | ALB |
| B200 i 245.234 | E | 2034 | 266.980 | A | | | 05/05 ▸ 03/08 | 1695000000 | **818806** | 700 96 | ALB |
| B180 CDi,B200 CDi 245/.207/.208 | D | 1991 | 640.940,640.941 | M | | | 05/05 ▸ 03/08 | 1695000000 | **818806** | 700 96 | ALB |
| B180 CDi,B200 CDi 245/.207/.208 | D | 1991 | 640.940,640.941 | A | | | 05/05 ▸ 03/08 | 1695000000 | **818806** | 700 96 | ALB |
| **B CLASS (245) (2008>)** | | | | | | | | | | |
| 2.0 CDi 16V 245/.207/.208 | D | 1991 | 640.940,640.941 | M | | | 04/08 ▸ | 1695000000 | **818806** | 700 96 | ALB |
| 2.0 CDi 16V 245/.207/.208 | D | 1991 | 640.940,640.941 | A | | | 04/08 ▸ | 1695000000 | **818806** | 700 96 | ALB |
| **C CLASS (202) (93>2001)** | | | | | | | | | | |
| 2.0 i 202.025 | E | 1998 | 111.944 | M | | C | 01/94 ▸ 03/00 | 2025001100 | | 430 113 | ALB |
| 2.0 i 202.025 | E | 1998 | 111.944 | M | | C | 01/94 ▸ 03/00 | 2025001000 | | 430 113 | ALB |
| 2.0 i 202.025 | E | 1998 | 111.944 | A | | C | 01/94 ▸ 03/00 | 2025001000 | | 430 113 | ALB |
| 2.0 i 202.025 | E | 1998 | 111.944 | A | | C | 01/94 ▸ 03/00 | 2025001100 | | 430 113 | ALB |
| 2.3 i 202.024 | E | 2295 | 111.975 | M | | C | 09/95 ▸ 03/00 | 2025001000 | | 430 113 | ALB |
| 2.3 i 202.024 | E | 2295 | 111.975 | M | | C | 09/95 ▸ 03/00 | 2025001100 | | 430 113 | ALB |
| 2.3 i 202.024 | E | 2295 | 111.975 | A | | C | 09/95 ▸ 03/00 | 2025001000 | | 430 113 | ALB |
| 2.3 i 202.024 | E | 2295 | 111.975 | A | | C | 09/95 ▸ 03/00 | 2025001100 | | 430 113 | ALB |
| 2.2 CDI 202/.133/.134 | D | 2151 | 611.960,611.960A | M | | C | 03/98 ▸ 03/00 | 2025001100 | | 430 113 | ALB |
| 2.2 CDI 202/.133/.134 | D | 2151 | 611.960,611.960A | M | | C | 03/98 ▸ 03/00 | 2025001000 | | 430 113 | ALB |
| 2.2 CDI 202/.133/.134 | D | 2151 | 611.960,611.960A | A | | C | 03/98 ▸ 03/00 | 2025001100 | | 430 113 | ALB |
| 2.2 CDI 202/.133/.134 | D | 2151 | 611.960,611.960A | A | | C | 03/98 ▸ 03/00 | 2025001000 | | 430 113 | ALB |
| 2.5 TD 202.128 | D | 2497 | 605.960 | M | | C | 09/95 ▸ 03/00 | 2025001000 | | 430 113 | ALB |
| 2.5 TD 202.128 | D | 2497 | 605.960 | M | | C | 09/95 ▸ 03/00 | 2025001100 | | 430 113 | ALB |
| 2.5 TD 202.128 | D | 2497 | 605.960 | A | | C | 09/95 ▸ 03/00 | 2025001100 | | 430 113 | ALB |
| 2.5 TD 202.128 | D | 2497 | 605.960 | A | | C | 09/95 ▸ 03/00 | 2025001000 | | 430 113 | ALB |
| **C CLASS (203) (2000>2003)** | | | | | | | | | | |
| 1.8 CGI 16V,1.8 i 16V 203/.042/.043/.046 .240 | E | 1796 | 271.940,271.942,271.946 271.948 | M | | | 06/02 ▸ 12/03 | 2035000500 | | 650 127 | ALB |
| 1.8 CGI 16V,1.8 i 16V 203/.042/.043/.046 .240 | E | 1796 | 271.940,271.942,271.946 271.948 | A | | | 06/02 ▸ 12/03 | 2035000500 | | 650 127 | ALB |
| 2.1 CDI,2.1 CDI 16V 203/.004/.006/.204 .206/.207/.208/.706 284437 ▸ | D | 2148 | 611.962,646.962,646.963 | M | | | 11/01 ▸ 12/03 | 2035000600 | | 500 135 | ALB |
| 2.1 CDI 16V 203/.207/.208 | D | 2148 | 646.962,646.963 | M | | | 01/03 ▸ 12/03 | 2035000500 | | 650 127 | ALB |
| 2.1 CDI,2.1 CDI 16V 203/.004/.006/.204 .206/.207/.208/.706 284437 ▸ | D | 2148 | 611.962,646.962,646.963 | A | | | 11/01 ▸ 12/03 | 2035000600 | | 500 135 | ALB |
| 2.1 CDI 16V 203/.207/.208 | D | 2148 | 646.962,646.963 | A | | | 01/03 ▸ 12/03 | 2035000500 | | 650 127 | ALB |
| 2.1 CDI 203/.004/.006/.204 .206/.706 ▸ 284436 | D | 2148 | 611.962 | M | | | 04/00 ▸ 01/03 | 2035000000 | **817760** | 650 130 | ALM |
| 2.1 CDI 203/.004/.006/.204 .206/.706 ▸ 284436 | D | 2148 | 611.962 | A | | | 04/00 ▸ 01/03 | 2035000000 | **817760** | 650 130 | ALM |
| 2.7 CDI 203.016 | D | 2685 | 612.962 | M | | | 08/00 ▸ 12/03 | 2035000500 | | 650 127 | ALB |
| 2.7 CDI 203/.016/.216 284437 ▸ | D | 2685 | 612.962 | M | | | 11/01 ▸ 12/03 | 2035000600 | | 500 135 | ALB |
| 2.7 CDI 203.016 | D | 2685 | 612.962 | A | | | 08/00 ▸ 12/03 | 2035000500 | | 650 127 | ALB |

Charge Air Cooler Refroidisseur d'air de suralimentation Ladeluftkühler Intercooler Intercooler Turbo Radyatörü
Intercooler Охладитель всасываемого воздуха töltőlevegő hűtő Intercooler Intercooler Intercooler



• **New** Nouveau **Nuevo** Novo **Nuovo** Nieuw **Neu** Nowość **Yeni** Новый Νέο **Novy**

# MERCEDES (.../...)

| | | CC | | | AC | | | OE | Valeo | DIM. | | TECH |
|---|---|---|---|---|---|---|---|---|---|---|---|---|
| **C CLASS (203) (2000>2003) (.../...)** | | | | | | | | | | | | |
| 2.7 CDI<br>284437 ▸ | 203/.016/.216 | D | 2685 | 612.962 | A | | | 11/01 ▸ 12/03 | 2035000600 | | 500 | 135 ALB |
| 2.7 CDI<br>▸ 284436 | 203/.016/.216 | D | 2685 | 612.962 | M | | | 08/00 ▸ 01/03 | 2035000000 | **817760** | 650 | 130 ALM |
| 2.7 CDI<br>▸ 284436 | 203/.016/.216 | D | 2685 | 612.962 | A | | | 08/00 ▸ 01/03 | 2035000000 | **817760** | 650 | 130 ALM |
| 3.0 CDI 20V | 203/.018/.218 | D | 2950 | 612.990 | A | | | 09/02 ▸ 12/03 | 2035000500 | | 650 | 127 ALB |
| **C CLASS (203) (2004>)** | | | | | | | | | | | | |
| C180 i,C200 i,C220CGI CGI<br>C230 i | 203/.040/.042/.043<br>.046/.240 | E | 1796 | 271.940,271.942,271.946<br>271.948 | M | | | 01/04 ▸ 08/07 | 2035000500 | | 650 | 127 ALB |
| C180 i,C200 i,C220CGI CGI<br>C230 i | 203/.040/.042/.043<br>.046/.240 | E | 1796 | 271.940,271.942,271.946<br>271.948 | A | | | 01/04 ▸ 08/07 | 2035000500 | | 650 | 127 ALB |
| C200CDI CDI,C220CDI CDI | 203/.007/.008/.207<br>.208 | D | 2148 | 646.962,646.963 | M | | | 01/04 ▸ 08/07 | 2035000500 | | 650 | 127 ALB |
| C200CDI CDI,C220CDI CDI<br>311629, 284437 ▸ | 203/.007/.008/.707 | D | 2148 | 646.962,646.963 | M | | | 01/04 ▸ 02/08 | 2035000600 | | 500 | 135 ALB |
| C200CDI CDI,C220CDI CDI | 203/.007/.008/.207<br>.208 | D | 2148 | 646.962,646.963 | A | | | 01/04 ▸ 08/07 | 2035000500 | | 650 | 127 ALB |
| C200CDI CDI,C220CDI CDI<br>311629 ▸ | 203/.007/.008 | D | 2148 | 646.962,646.963 | A | | | 01/04 ▸ 12/06 | 2035000600 | | 500 | 135 ALB |
| C270CDI CDI | 203.016 | D | 2685 | 612.962 | M | | | 01/04 ▸ 07/05 | 2035000500 | | 650 | 127 ALB |
| C270CDI CDI<br>311629 ▸ | 203/.016/.216 | D | 2685 | 612.962 | M | | | 01/04 ▸ 07/05 | 2035000600 | | 500 | 135 ALB |
| C270CDI CDI | 203.016 | D | 2685 | 612.962 | A | | | 01/04 ▸ 07/05 | 2035000500 | | 650 | 127 ALB |
| C270CDI CDI<br>311629 ▸ | 203/.016/.216 | D | 2685 | 612.962 | A | | | 01/04 ▸ 07/05 | 2035000600 | | 500 | 135 ALB |
| C30CDI CDI | 203/.018/.218 | D | 2950 | 612.990 | A | | | 01/04 ▸ 08/07 | 2035000500 | | 650 | 127 ALB |
| **C CLASS (204) (2007>)** | | | | | | | | | | | | |
| 1.8 i 16V | 204/.041/.046/.241<br>.246 | E | 1796 | 271.950,271.952 | M | | | 01/07 ▸ 02/11 | 2045000500 | **•818276** | | |
| 1.8 i 16V | 204/.041/.046/.241<br>.246 | E | 1796 | 271.950,271.952 | A | | | 01/07 ▸ 02/11 | 2045000500 | **•818276** | | |
| 2.15 CDI 16V,2.15 CDI BE 16V | 204/.006/.007/.207 | D | 2148 | 646.811,646.812 | M | | | 05/07 ▸ 02/11 | 2045000500 | **•818276** | | |
| 2.15 CDI 16V,2.15 CDI BE 16V | 204/.006/.007/.207 | D | 2148 | 646.811,646.812 | A | | | 05/07 ▸ 02/11 | 2045000500 | **•818276** | | |
| **CLK (209) (2002>)** | | | | | | | | | | | | |
| CLK 200,CLK 200 i | 209/.342/.343/.442 | E | 1796 | 271.940,271.942 | M | | | 03/02 ▸ 06/09 | 2035000600 | | 500 | 135 ALB |
| CLK 200,CLK 200 i | 209/.342/.343/.442 | E | 1796 | 271.940,271.942 | M | | | 03/02 ▸ 06/09 | 2035000500 | | 650 | 127 ALB |
| CLK 200,CLK 200 i | 209/.342/.343/.442 | E | 1796 | 271.940,271.942 | A | | | 03/02 ▸ 06/09 | 2035000500 | | 650 | 127 ALB |
| CLK 200,CLK 200 i | 209/.342/.343/.442 | E | 1796 | 271.940,271.942 | A | | | 03/02 ▸ 06/09 | 2035000600 | | 500 | 135 ALB |
| CLK 220 CDI | 209.308 | D | 2148 | 646.966 | M | | | 06/05 ▸ 06/09 | 2035000500 | | 650 | 127 ALB |
| CLK 220 CDI | 209.308 | D | 2148 | 646.966 | A | | | 06/05 ▸ 06/09 | 2035000500 | | 650 | 127 ALB |
| CLK 270 CDI | 209.316 | D | 2685 | 612.967 | M | | | 03/02 ▸ 05/05 | 2035000600 | | 500 | 135 ALB |
| CLK 270 CDI | 209.316 | D | 2685 | 612.967 | A | | | 03/02 ▸ 05/05 | 2035000600 | | 500 | 135 ALB |
| CLK 320 CDI | 209.320 | D | 2987 | 642.910 | M | | | 06/05 ▸ 06/09 | 2035000500 | | 650 | 127 ALB |
| CLK 320 CDI | 209/.320/.420 | D | 2987 | 642.910 | A | | | 06/05 ▸ 06/09 | 2035000500 | | 650 | 127 ALB |
| **CLC (203) (2008>)** | | | | | | | | | | | | |
| 2.1 CDI 16V<br>E020600, A555897 ▸ | 203.707 | D | 2148 | 646.962 | M | | | | 2035000500 | | 650 | 127 ALB |
| 2.1 CDI 16V<br>E020600, A555897 ▸ | 203.707 | D | 2148 | 646.962 | A | | | | 2035000500 | | 650 | 127 ALB |
| 2.1 CDI 16V<br>▸ A666024, E019999 | 203/.707/.708 | D | 2148 | 646.962,646.963 | M | | | 03/08 ▸ | 2035000600 | | 500 | 135 ALB |
| 2.1 CDI 16V | 203/.707/.708 | D | 2148 | 646.962,646.963 | A | | | 03/08 ▸ | 2035000600 | | 500 | 135 ALB |
| **E CLASS (210)** | | | | | | | | | | | | |
| E200 i,E200L i | 210/.048/.248 | E | 1998 | 111.957 | M | | | 06/99 ▸ 03/03 | 2105002000 | **817907** | 560 | 115 ALB |
| E200 i,E200L i | 210/.048/.248 | E | 1998 | 111.957 | A | | | 06/99 ▸ 03/03 | 2105002000 | **817907** | 560 | 115 ALB |
| E200 CDI,E220 CDI | 210/.006/.007/.206 | D | 2148 | 611.961 | M | | | 03/96 ▸ 03/03 | 2105002000 | **817907** | 560 | 115 ALB |
| E200 CDI,E220 CDI | 210/.006/.007/.206<br>.606 | D | 2148 | 611.961 | A | | | 03/96 ▸ 03/03 | 2105002000 | **817907** | 560 | 115 ALB |
| E270 CDI | 210/.016/.216 | D | 2685 | 612.961 | M | | | 06/99 ▸ 03/03 | 2105002000 | **817907** | 560 | 115 ALB |
| E270 CDI | 210/.216/.616 | D | 2685 | 612.961 | A | | | 06/99 ▸ 03/03 | 2105002000 | **817907** | 560 | 115 ALB |
| E290TD TD,E290TDL TD | 210/.017/.217/.617 | D | 2874 | 602.982 | M | | C | 04/95 ▸ 06/99 | 2105000400 | **817905** | 562 | 113 ALB |
| E290TD TD,E290TDL TD | 210/.017/.217/.617 | D | 2874 | 602.982 | M | | | 04/95 ▸ 06/99 | 2105001300 | **817905** | 562 | 113 ALB |
| E290TD TD,E290TDL TD | 210/.017/.217/.617 | D | 2874 | 602.982 | A | | C | 04/95 ▸ 06/99 | 2105000400 | **817905** | 562 | 113 ALB |

# MERCEDES (.../...)

## E CLASS (210) (.../...)

| | | | CC | | AC | | | OE | Valeo | DIM. | TECH |
|---|---|---|---|---|---|---|---|---|---|---|---|
| E290TD TD,E290TDL TD | 210/.017/.217/.617 | D | 2874 | 602.982 | A | | 04/95 ▸ 06/99 | 2105001300 | **817905** | 562 113 | ALB |
| E320 CDI | 210/.026/.226 | D | 3224 | 613.961 | A | | 06/99 ▸ 03/03 | 2105001500 | **817911** | 530 113 | ALB |
| E320 CDI | 210/.026/.226 | D | 3224 | 613.961 | A | | 06/99 ▸ 03/03 | 2105002100 | **817911** | 530 113 | ALB |

## VANEO (414)

| | | | | | | | | | | | |
|---|---|---|---|---|---|---|---|---|---|---|---|
| 1.7 CDI | 414.700 | D | 1689 | 668.914 | M | | 10/01 ▸ 07/05 | 1685000000 | **817759** | 396 115 | ALB |
| 1.7 CDI | 414.700 | D | 1689 | 668.914 | A | | 10/01 ▸ 07/05 | 1685000000 | **817759** | 396 115 | ALB |

# MERCEDES

## SPRINTER (95>)

| | | | | | | | | | | | |
|---|---|---|---|---|---|---|---|---|---|---|---|
| 2.3 i | 901/.061/.062 ; 902/.011/.012/.061/.062/.071 .072 ; 903/.011/.012/.013/.022/.061/.062 .063/.071/.072/.073 ; 904/.012/.013/.062 .063 | E | 2295 | 111.979 | M | | 02/95 ▸ 02/06 | 9015010701 | **816890** | 718 254 | ALB |
| 2.2 D | 901/.611/.612/.621/.661/.662 ; 902/.611/.612 .621/.622/.661/.662/.671/.672 ; 903/.611 .612/.613/.621/.622/.623/.661/.662/.663 .673 ; 904/.612/.613/.622/.623/.662/.663 | D | 2151 | 611DE22LA | M | | 11/99 ▸ 02/06 | 9015010701 | **816890** | 718 254 | ALB |
| 2.3 D | 901/.311/.312/.321/.361/.362/.371 ; 902/.311 .312/.321/.322/.361/.362/.371/.372 ; 903 .311/.312/.313/.321/.322/.323/.361/.362/.363 .371/.372/.373 ; 904/.312/.313/.322/.323 .362/.363 | D | 2299 | 601.943 | M | | 02/95 ▸ 02/06 | 9015010701 | **816890** | 718 254 | ALB |
| 2.7 D | 902/.611/.612/.621/.622/.661/.662/.671/.672 903/.611/.612/.613/.621/.622/.623/.661/.662 .663 ; 904/.612/.613/.622/.623/.662/.663 905/.612/.613/.622/.623 | D | 2686 | 612.981,612DE27LA | M | | 11/99 ▸ 02/06 | 9015010701 | **816890** | 718 254 | ALB |
| 2.7 D | 905/.612/.613/.622/.623 | D | 2686 | 612.981 | A | | 06/01 ▸ 02/06 | 9015010701 | **816890** | 718 254 | ALB |
| 2.9 D | 901/.421/.461/.462 ; 902/.411/.412/.421/.422 .461/.462/.471/.472 ; 903/.411/.412/.413 .421/.422/.423/.461/.462/.463/.471/.472 .473 ; 904/.412/.413/.422/.423/.462/.463 | D | 2874 | 602.980 | M | | 02/95 ▸ 02/06 | 9015010701 | **816890** | 718 254 | ALB |

## SPRINTER II (2006>)

| | | | | | | | | | | | |
|---|---|---|---|---|---|---|---|---|---|---|---|
| 3.5 i | 906/.113/.133/.135/.213/.233/.235/.613/.633 .635/.637/.713/.733/.735 | E | 3498 | 272.979 | M | | 02/06 ▸ | 9065010101 | **817994** | 640 203,8 | ALB |
| 3.5 i | 906/.113/.133/.135/.213/.233/.235/.613/.633 .635/.637/.713/.733/.735 | E | 3498 | 272.979 | A | | 02/06 ▸ | 9065010101 | **817994** | 640 203,8 | ALB |
| 2.2 D | 906/.111/.113/.131/.133/.135/.153/.155/.211 .213/.231/.233/.235/.253/.255/.611/.613/.631 .633/.635/.637/.653/.655/.657/.711/.713/.731 .733/.735 | D | 2148 | 646,646.984,646.DE22LA | M | | 02/06 ▸ | 9065010101 | **817994** | 640 203,8 | ALB |
| 2.2 D | 906/.111/.113/.131/.133/.135/.153/.155/.211 .213/.231/.233/.235/.253/.255/.611/.613/.631 .633/.635/.637/.653/.655/.657/.711/.713/.731 .733/.735 | D | 2148 | 646,646.984,646.DE22LA | A | | 02/06 ▸ | 9065010101 | **817994** | 640 203,8 | ALB |
| 3.0 D V6 24V | 906/.111/.113/.131 .133/.135/.153/.155/.211/.213/.231/.233/.235 .253/.255/.611/.613/.631/.633/.635/.637/.653 .655/.657/.711/.713 | D | 2987 | 642.992 | M | | 02/06 ▸ | 9065010101 | **817994** | 640 203,8 | ALB |
| 3.0 D 24V,3.0 D V6 24V | 906/.111/.113/.131 .133/.135/.153/.155/.211/.213/.231/.233/.235 .253/.255/.611/.613/.631/.633/.635/.637/.653 .655/.657/.711/.713 | D | 2987 | 642.992 | A | | 02/06 ▸ | 9065010101 | **817994** | 640 203,8 | ALB |

## VIANO

| | | | | | | | | | | | |
|---|---|---|---|---|---|---|---|---|---|---|---|
| 2.0 Cdi | 639/7111/7131/8111 8131/8151 | D | 2148 | 646.982 | M | | 01/03 ▸ | 6395010201 | **818808** | 633 133 | ALB |
| 2.0 Cdi,2.2 Cdi | 639/7111/7131/8111 8131/8151 | D | 2148 | 646.982 | M | | 01/03 ▸ | 6395010301 | **818807** | 633 158 | ALB |
| 2.0 Cdi | 639/7111/7131/8111 8131/8151 | D | 2148 | 646.982 | A | | 01/03 ▸ | 6395010201 | **818808** | 633 133 | ALB |
| 2.0 Cdi,2.2 Cdi | 639/7111/7131/8111 8131/8151 | D | 2148 | 646.982 | A | | 01/03 ▸ | 6395010301 | **818807** | 633 158 | ALB |

## VITO (2003>)

| | | | | | | | | | | | |
|---|---|---|---|---|---|---|---|---|---|---|---|
| 2.2 CDI 16V | 639/6011/6031/6051 7011/7031/7051 | D | 2148 | 646.982,646.983 | M | | 01/03 ▸ | 6395010201 | **818808** | 633 133 | ALB |

Charge Air Cooler Refroidisseur d'air de suralimentation Ladeluftkühler Intercooler Intercooler Turbo Radyatörü
Intercooler Охладитель всасываемого воздуха töltőlevegő hűtő Intercooler Intercooler Intercooler



• **New** Nouveau **Nuevo** Novo **Nuovo** Nieuw **Neu** Nowość **Yeni** Новый Νέο **Nový**

| | Type Ctr. | | CC | | AC | | | OE | Valeo | DIM. | TECH |
|---|---|---|---|---|---|---|---|---|---|---|---|
| **MERCEDES (.../...)** | | | | | | | | | | | |
| **VITO (2003>) (.../...)** | | | | | | | | | | | |
| 2.2 CDI 16V | 639/6011/6031/6051 7011/7031/7051 | D | 2148 | 646.982,646.983 | M | | | 01/03 ▸ | 6395010301 | **818807** | 633 158 | ALB |
| **MINI** | | | | | | | | | | | |
| **MINI (2001>)** | | | | | | | | | | | |
| 1.6 i 16V | RH31 ; RE31 | E | 1598 | W11B16A-163,W11B16A-170 | M | | | 04/02 ▸ 11/06 | 11651515368 | **818713** | 277 158 | ALB |
| 1.4 D 75,1.4 D 88,1.4 d | RB11 ; RB10 | D | 1364 | 1ND | M | | | 05/03 ▸ 11/06 | 17517788755 | **818714** | 285 127 | ALB |
| **NISSAN** | | | | | | | | | | | |
| **MICRA (K12) (2003>)** | | | | | | | | | | | |
| 1.5 dCi | EDAK12 ; FDAK12 | D | 1461 | K9K.7 | M | | | 01/03 ▸ 05/05 | 14461AY600 | **817640** | 523 178,6 | ALB |
| **NOTE (2005>2007)** | | | | | | | | | | | |
| 1.5 dCi | | D | 1461 | K9K.7 | M | | | 09/05 ▸ 12/07 | 144619U21A | **•818852** | | |
| **NOTE (2008>)** | | | | | | | | | | | |
| 1.5 dCi 106,1.5 dCi 86 | FTKAL/-F/-Y ; FTKAR -F/-Y | D | 1461 | K9K.7,K9K.7/F | M | | | 01/08 ▸ | 144619U21A | **•818852** | | |
| **TIIDA (C11X) (2007>)** | | | | | | | | | | | |
| 1.5 dCi | BTKAR-Y ; FTKAL-Y FTKAR-Y ; BTKAL/-Y | D | 1461 | K9K.7.64 | M | | | 03/07 ▸ | 14461EM00A | **•818264** | 210 203,8 | ALB |
| **NISSAN** | | | | | | | | | | | |
| **KUBISTAR** | | | | | | | | | | | |
| 1.5 dCi,1.5 dCi 60,1.5 dCi 70 1.5 dCi 85 | X76-F/SP/SQ/SR | D | 1461 | K9K.7,K9K.7.02,K9K.7.10 K9K.7.16,K9K.7.18 | M | | | 09/03 ▸ | 2141000QAB | **817654** | 480 133,4 | ALB |
| **PRIMASTAR (2002>2006)** | | | | | | | | | | | |
| 1.9 dCi | | D | 1870 | F9Q.7.60 | M | | | 09/02 ▸ 09/06 | 1449600QAA | **817554** | 540 175,6 | ALB |
| 2.5 dCi | | D | 2464 | G9U.7.30 | M | | | 09/02 ▸ 09/06 | 1449600QAB | **817636** | 540 175,6 | ALB |
| 2.5 dCi | | D | 2464 | G9U.7.30 | M | | | 09/02 ▸ 09/06 | 1449600QAA | **817554** | 540 175,6 | ALB |
| **OPEL** | | | | | | | | | | | |
| **ASTRA G (98>2005)** | | | | | | | | | | | |
| 1.7 CDTI,1.7 DTi 16V | TU3/5JA/5JF | D | 1686 | Y17DT,Z17DTL | M | | | 02/00 ▸ 02/04 | 1302413 | **817916** | 430 113 | ALB |
| 1.7 TD,1.7 TD Ecoturbo | | D | 1699 | X17DTL | M | | | 02/98 ▸ 08/00 | 1300405 | | 240 127 | ALB |
| 2.0 DTi 16V ▸ 26999999, 22999999 | | D | 1995 | Y20DTH | A | | | 08/99 ▸ | 1302413 | **817916** | 430 113 | ALB |
| 2.0 DTi 16V | | D | 1995 | Y20DTH | M | | | 08/99 ▸ | 1302413 | **817916** | 430 113 | ALB |
| **CORSA C (2000>2003)** | | | | | | | | | | | |
| 1.7 DI 16V,1.7 DTi 16V | 0AB/08J/68J ; 0AE 08J/68J ; 0AS/08J/68J | D | 1686 | Y17DT,Y17DTL | M | | | 09/00 ▸ 08/03 | 1302113 | **818728** | 275 127 | ALB |
| **CORSA C (2003>)** | | | | | | | | | | | |
| 1.3 CDTI 16V | AB68FA ; AC08FA AC68FA ; AE08FA ; AE68FA ; AS08FA ; AS68FA AB0/8FA | D | 1248 | Z13DT | M | | | 09/03 ▸ 07/06 | 1300410 | **818809** | 275 127 | ALB |
| 1.7 CDTI 16V | AE68JK ; AS08JK AS68JK ; AE0/8JK | D | 1686 | Z17DTH | M | | | 09/03 ▸ 07/06 | 1300410 | **818809** | 275 127 | ALB |
| **SIGNUM** | | | | | | | | | | | |
| 2.0 i Turbo 16V | ONP48 ; ONS48 ONU48 ; ONK/48 | E | 1998 | Z20NET | M | | | 06/03 ▸ 09/05 | 6302046 | **817729** | 647 400 | ALB |
| 1.9 CDTI,1.9 CDTI 16V | | D | 1910 | Z19DT,Z19DTH | M | | | 04/04 ▸ 09/05 | 6302059 | **817730** | 647 400 | ALB |
| 1.9 CDTI,1.9 CDTI 16V | | D | 1910 | Z19DT,Z19DTH | M | | | 04/04 ▸ 09/05 | 6302065 | **818722** | 648,4 414,5 | ALM |
| 2.0 DTi 16V | ONK48 ; ONU48 | D | 1995 | Y20DTH | M | | | 06/03 ▸ 09/05 | 6302041 | **817697** | 647 414 | ALM |
| 2.2 DTI 16V | ONP48 ; ONS48 ONU48 ; ONK/48 | D | 2171 | Y22DTR | M | | | 06/03 ▸ 09/05 | 6302041 | **817697** | 647 414 | ALM |
| 2.2 DTI 16V | ONP48 ; ONS48 ONU48 ; ONK/48 | D | 2171 | Y22DTR | A | | | 06/03 ▸ 09/05 | 6302040 | **817729** | 647 400 | ALB |

| Type Ctr. | | CC | | AC | | | OE | Valeo | DIM. | TECH |
|---|---|---|---|---|---|---|---|---|---|---|
| **OPEL (.../...)** | | | | | | | | | | |
| **SIGNUM (.../...)** | | | | | | | | | | |
| 3.0 CDTi V6 24V ONP48 ; ONS48 ONU48 ; ONK/48 | D | 2958 | Y30DT | M | | | 06/03 ▸ 09/05 | 6302048 | **818701** | 647 400 ALB |
| 3.0 CDTi V6 24V ONP48 ; ONS48 ONU48 ; ONK/48 | D | 2958 | Y30DT | A | | | 06/03 ▸ 09/05 | 6302048 | **818701** | 647 400 ALB |
| **SIGNUM B (2005>)** | | | | | | | | | | |
| 2.0 i Turbo 16V | E | 1998 | Z20NET | M | | | 10/05 ▸ 11/08 | 6302046 | **817729** | 647 400 ALB |
| 2.8 i V6 Turbo 24V ▸ 71999999 | E | 2792 | Z28NEL,Z28NET | M | | | 10/05 ▸ 12/07 | 6302066 | **817998** | 647 401,2 ALB |
| 2.8 i V6 Turbo 24V ▸ 71999999 | E | 2792 | Z28NEL,Z28NET | A | | | 10/05 ▸ 12/07 | 6302066 | **817998** | 647 401,2 ALB |
| 1.9 CDTI | D | 1910 | Z19DTL | M | + | | 10/05 ▸ 11/08 | 6302065 | **818722** | 648,4 414,5 ALM |
| 1.9 CDTI,1.9 CDTI 16V | D | 1910 | Z19DT,Z19DTH | M | | | 10/05 ▸ 11/08 | 6302065 | **818722** | 648,4 414,5 ALM |
| 1.9 CDTI 16V | D | 1910 | Z19DTH | A | | | 10/05 ▸ 11/08 | 6302059 | **817730** | 647 400 ALB |
| 3.0 CDTi V6 24V | D | 2958 | Z30DT | M | | | 10/05 ▸ 11/08 | 6302066 | **817998** | 647 401,2 ALB |
| 3.0 CDTi V6 24V | D | 2958 | Z30DT | A | | | 10/05 ▸ 11/08 | 6302066 | **817998** | 647 401,2 ALB |
| **TIGRA TWINTOP (2008>)** | | | | | | | | | | |
| 1.3 CDTi 16V | D | 1248 | Z13DT | M | | | 07/08 ▸ 08/09 | 1300410 | **818809** | 275 127 ALB |
| **VECTRA C (2002>2005)** | | | | | | | | | | |
| 2.0 i Turbo 16V JS35MY ; JW68MY | E | 1998 | Z20NET | M | | | 03/03 ▸ 09/05 | 6302046 | **817729** | 647 400 ALB |
| 1.9 CDTI,1.9 CDTI 16V | D | 1910 | Z19DT,Z19DTH | M | | | 04/04 ▸ 09/05 | 6302059 | **817730** | 647 400 ALB |
| 1.9 CDTI,1.9 CDTI 16V | D | 1910 | Z19DT,Z19DTH | M | | | 04/04 ▸ 09/05 | 6302065 | **818722** | 648,4 414,5 ALM |
| 1.9 CDTI 16V | D | 1910 | Z19DTH | A | | | 04/04 ▸ 09/05 | 6302059 | **817730** | 647 400 ALB |
| 2.0 DTi 16V JV68 ; OJ ; OJK69M OJU69M ; JK3/5MV | D | 1995 | Y20DTH | M | | | 04/02 ▸ 03/05 | 6302041 | **817697** | 647 414 ALM |
| 2.2 DTI 16V JS35PP ; JU35PP JV68PP ; JW68PP ; OJK69P ; OJU69P ; OJV68 JK3/5PP | D | 2171 | Y22DTR | M | | | 04/02 ▸ 09/05 | 6302041 | **817697** | 647 414 ALM |
| 2.2 DTI 16V JS35PP ; JU35PP JV68PP ; JW68PP ; OJK69P ; OJU69P ; JK3/5PP | D | 2171 | Y22DTR | A | | | 04/02 ▸ 09/05 | 6302040 | **817729** | 647 400 ALB |
| 3.0 CDTI V6 24V JU35XG ; JU69XG JW68XH ; JS3/5XG | D | 2958 | Y30DT | M | | | 06/03 ▸ 09/05 | 6302048 | **818701** | 647 400 ALB |
| 3.0 CDTI V6 24V JU35XH ; JU69XH JW68XH ; JS3/5XH | D | 2958 | Y30DT | A | | | 06/03 ▸ 09/05 | 6302048 | **818701** | 647 400 ALB |
| **VECTRA C (2005>)** | | | | | | | | | | |
| 2.0 i Turbo 16V | E | 1998 | Z20NET | M | | | 10/05 ▸ 02/09 | 6302046 | **817729** | 647 400 ALB |
| 2.8 i V6 Turbo 24V | E | 2792 | Z28NEL,Z28NET | A | | | 10/05 ▸ 02/09 | 6302066 | **817998** | 647 401,2 ALB |
| 2.8 i V6 Turbo 24V ▸ 71999999 | E | 2792 | Z28NEL,Z28NET | M | | | 10/05 ▸ 02/09 | 6302066 | **817998** | 647 401,2 ALB |
| 1.9 CDTI,1.9 CDTI 16V | D | 1910 | Z19DT,Z19DTH,Z19DTL | M | + | | 10/05 ▸ 02/09 | 6302065 | **818722** | 648,4 414,5 ALM |
| 1.9 CDTI 16V | D | 1910 | Z19DTH | A | | | 10/05 ▸ 02/09 | 6302059 | **817730** | 647 400 ALB |
| 3.0 CDTI V6 24V | D | 2958 | Z30DT | M | | | 10/05 ▸ 02/09 | 6302066 | **817998** | 647 401,2 ALB |
| 3.0 CDTI V6 24V | D | 2958 | Z30DT | A | | | 10/05 ▸ 02/09 | 6302066 | **817998** | 647 401,2 ALB |
| **ZAFIRA (98>2003)** | | | | | | | | | | |
| 2.0 DTi 16V | D | 1995 | Y20DTH | M | | | 01/99 ▸ | 1302413 | **817916** | 430 113 ALB |
| **OPEL** | | | | | | | | | | |
| 1.7 DTi 16V DF06JC ; DG06JC | D | 1686 | Y17DT | M | | | 04/02 ▸ 06/04 | 1302113 | **818728** | 275 127 ALB |
| **COMBO (2001>2004)** | | | | | | | | | | |
| 1.7 DI 16V,1.7 DTi 16V DC2/5JC/5JD ; DF2 5JC/5JD | D | 1686 | Y17DT,Y17DTL | M | | | 10/01 ▸ 06/04 | 1302113 | **818728** | 275 127 ALB |
| **COMBO (2004>)** | | | | | | | | | | |
| 1.3 CDTI 16V | D | 1248 | Z13DT,Z13DTJ | M | | | 07/04 ▸ | 1300410 | **818809** | 275 127 ALB |
| 1.7 CDTI 16V DF25JK | D | 1686 | Z17DTH | M | | | 07/04 ▸ | 1300410 | **818809** | 275 127 ALB |
| **MOVANO** | | | | | | | | | | |
| 1.9 Dti FD ; JD | D | 1870 | F9Q.7.70,F9Q.7.72 | M | | | 08/00 ▸ 07/02 | 4500847 | **817115** | 680 181,5 ALB |
| 1.9 DTi FD0P ; JD0P | D | 1870 | F9Q.7.72 | M | | | 10/03 ▸ 10/06 | 4415074 | **817637** | 740 145,6 ALB |
| 2.2 Dti 16V FD ; JD ; UD ; ED | D | 2188 | G9T.7.20,G9T.7.22 | M | | | 09/00 ▸ 09/03 | 4500847 | **817115** | 680 181,5 ALB |
| 2.2 DTi 16V JD0N | D | 2188 | G9T.7.50 | M | | | 10/03 ▸ 10/05 | 4415074 | **817637** | 740 145,6 ALB |

Charge Air Cooler Refroidisseur d'air de suralimentation Ladeluftkühler Intercooler Intercooler Turbo Radyatörü
Intercooler Охладитель всасываемого воздуха töltőlevegő hűtő Intercooler Intercooler Intercooler



• **New** Nouveau **Nuevo** Novo **Nuovo** Nieuw **Neu** Nowość **Yeni** Новый Νέο **Nový**

| Type Ctr. | | CC | | AC | | | OE | Valeo | DIM. | TECH |
|---|---|---|---|---|---|---|---|---|---|---|
| **OPEL (.../...)** | | | | | | | | | | |
| **MOVANO (.../...)** | | | | | | | | | | |
| 2.5 CDTi 16V,2.5 Dti 16V FD0E ; JD0E ; UD0E ED0/E | D | 2464 | G9U.7.20 | M | | | 10/01 ▸ 10/06 | 4500847 | **817115** | 680 181,5 ALB |
| 2.5 CDTi,2.5 DTi,2.5 Dti 16V ED0/M/U/V/W ; FD0/M U/V/W ; HD0V ; HD0/E/M/U/W ; JD0/M/W ; UD0/M U/V/W ; UD4/E/M/W | D | 2464 | G9U.7.20,G9U.7.50,G9U.7.54 | M | | | 10/01 ▸ | 4415074 | **817637** | 740 145,6 ALB |
| 2.5 D FD ; JD ; UD ; ED | D | 2499 | S8U.7.72 | M | | | 10/98 ▸ 10/01 | 4415074 | **817637** | 740 145,6 ALB |
| 2.8 Dti FD0C ; JD0F ; UD0C ED0/C | D | 2800 | S9W.7.00,S9W.7.02 | M | | | 10/98 ▸ 10/01 | 4500847 | **817115** | 680 181,5 ALB |
| 3.0 CDTi 16V FD0S ; UD0S ; ED0/S | D | 2953 | ZD3.2.02 | M | | | 10/03 ▸ 01/06 | 4415074 | **817637** | 740 145,6 ALB |
| **VIVARO (2001>2006)** | | | | | | | | | | |
| 1.9 DI,1.9 DTI 1F0/5LD/5LE ; 1G0 3LD/3LE/5LD/5LE | D | 1870 | F9Q.7.60,F9Q.7.62 | M | | | 05/01 ▸ 07/06 | 4408078 | **817554** | 540 175,6 ALB |
| 2.5 DTI 1F0/5SA/6SA ; 1G0 3SA/5SA/6SA | D | 2464 | G9U.7.30 | M | | | 05/03 ▸ 07/06 | 4411898 | **817636** | 540 175,6 ALB |
| **VIVARO (2006>)** | | | | | | | | | | |
| 2.0 CDTI | D | 1995 | M9R.7.80 | M | | | 07/06 ▸ | 4416946 | **818771** | 540 175,6 ALB |
| 2.5 CDTI | D | 2464 | G9U.6.30 | M | | | 07/06 ▸ | 4416946 | **818771** | 540 175,6 ALB |
| **PEUGEOT** | | | | | | | | | | |
| **206** | | | | | | | | | | |
| 1.6 HDi,1.6 HDi 16V 2D9/HZA ; 2H9/HYA HZA ; 2J9/HYA/HZA ; 2K9/HYA/HZA | D | 1560 | DV6TED4 | M | | | 04/04 ▸ 02/09 | 0384H1 | **818822** | 300 158 ALB |
| **306 (93>97)** | | | | | | | | | | |
| 1.9 TD 7AD/8A2/HY2 ; 7BD 8A2/HY2 ; 7CD/8A2/HY2 | D | 1905 | XUD9TE | M | | | 06/93 ▸ 02/97 | 0384F2 | | 142 489,5 ALB |
| **306 (97>2002)** | | | | | | | | | | |
| 1.9 D,1.9 SD,1.9 TD 7AD/8AD/9BD/HVE/HYE JYE/JYT ; 7BD/8AD/9BD/HVE/HYE/JYE/JYT ; 7CD HVE/HYE/JYE/JYT ; 7ED/9BD/HVE/HYE/JYE/JYT 7SD/JYE/JYT | D | 1905 | XUD9A,XUD9BSD,XUD9TE | M | | | 03/97 ▸ 03/02 | 0384F2 | | 142 489,5 ALB |
| **307(2001>2005)** | | | | | | | | | | |
| 1.6 HDi,1.6 HDi 16V 3A9/HXC/HYB/HZB 3C9/HYB/HZB ; 3E9/HYB/HZB ; 3H9/HYB/HZB | D | 1560 | DV6ATED4,DV6TED4 | M | | | 07/04 ▸ 06/05 | 0384H5 | **817845** | 300 147,4 ALB |
| 1.6 HDi 16V 3A9/HYB/HZB ; 3C9 HYB/HZB ; 3E9/HYB/HZB ; 3H9/HYB/HZB | D | 1560 | DV6TED4 | M | | | 07/04 ▸ 06/05 | 0384G4 | **817638** | 300 133,4 ALB |
| 2.0 HDi 16V 3CRHRH ; 3ERHRH 3HRHRH ; 3AR/HRH | D | 1997 | DW10BTED4 | M | | | 04/04 ▸ 06/05 | 0384G4 | **817638** | 300 133,4 ALB |
| **307 (2005>)** | | | | | | | | | | |
| 1.6 HDi 16V 3A9/HV/HV//HXC/HYB HYC/HZB/HZC ; 3C9/HV/HXC/HYB/HZB/HZC ; 3E9 HV/HXC/HYB/HZB/HZC ; 3G9/HXC/HYB ; 3H9/HV HXC/HYB/HZB | D | 1560 | DV6ATED4,DV6TED4 | M | | | 06/05 ▸ | 0384H5 | **817845** | 300 147,4 ALB |
| 1.6 HDi 16V 3A9/HYB/HYC ; 3C9 HYB/HYC ; 3G9HYB ; 3E9/HYB/HYC ; 3H9/HYB/HYC | D | 1560 | DV6TED4 | M | | | 06/05 ▸ 06/08 | 0384G4 | **817638** | 300 133,4 ALB |
| 2.0 HDi 16V 3BRHRH ; 3CRHRH 3ERHRH ; 3HRHRH ; 3AR/HRH | D | 1997 | DW10BTED4 | M | | | 06/05 ▸ 03/09 | 0384G4 | **817638** | 300 133,4 ALB |
| 2.0 HDi 16V 3CRHRJ ; 3HRHRJ 3AR/HRJ | D | 1997 | DW10BTED4 | A | | | 12/06 ▸ 06/08 | 0384K0 | **818769** | |
| **308** | | | | | | | | | | |
| 1.6 THP 16V 4B5FXH ; 4A5/FXC/FXH FYH ; 4C5/FXC/FXH/FYH ; 4H5/FXH/FYH | E | 1598 | EP6DT,EP6DTS | M | | | 09/07 ▸ | 1440H9 | **818841** | 300 147,4 ALB |
| 1.6 THP 16V 4B5FTF ; 4C5FTF 4H5FTF ; 4A5/FTF | E | 1598 | EP6DT | A | | | 09/07 ▸ | 1440H9 | **818841** | 300 147,4 ALB |
| 1.6 HDi 16V 4A9/HVC/HXC/HZC/HZH 4C9/HVC/HXC/HZC/HZH ; 4E9/HXC/HZH ; 4H9/HXC HZH | D | 1560 | DV6ATED4,DV6TED4,DV6TED4B | M | | | 09/07 ▸ | 0384L4 | **818837** | 300 147,4 ALB |
| 1.6 HDi 4B9HR8 | D | 1560 | DV6C | M | | | 03/09 ▸ | 0384N9 | •**818226** | |
| 2.0 HDi 16V 4BRHF8 ; 4CRHRH 4HRHRH ; 4AR/HRH | D | 1997 | DW10BTED4 | M | | | 09/07 ▸ | 0384K5 | **818836** | 300 174,4 ALB |

# PEUGEOT (.../...)

| Type Ctr. | | CC | | AC | | | OE | Valeo | DIM. | TECH |
|---|---|---|---|---|---|---|---|---|---|---|
| **308 (.../...)** | | | | | | | | | | |
| 2.0 HDi 16V 4BRHRJ ; 4CRHRJ 4HRHRJ ; 4AR/HRJ | D | 1997 | DW10BTED4 | A | | | 09/07 ▸ | 0384K0 | **818769** | | |
| **405 (87>92)** | | | | | | | | | | |
| 1.7 TD 15B/A82/A92/AJ2 15E/A82/A92/AJ2 | D | 1769 | XUD7TE | M | | | 06/87 ▸ 06/92 | 0384A8 | | 142 447 | ALB |
| **405 (92>96)** | | | | | | | | | | |
| 2.0 i Turbo 16S 4BRGZ7 | E | 1998 | XU10J4TE | M | | | 07/92 ▸ 10/95 | 0384C9 | | 300 126 | ALM |
| 1.9 TD 4BD/8A2/HY2 ; 4ED 8A2/HY2 | D | 1905 | XUD9TE | M | | | 07/92 ▸ 10/96 | 0384C7 | | 142 444 | ALB |
| **406 (95>2003)** | | | | | | | | | | |
| 2.0 i Turbo 8ERGXE ; 8BR/GX2/GXE | E | 1998 | XU10J2TE | M | | | 07/96 ▸ 03/99 | 0384F4 | **816918** | 610 359 | ALM |
| 2.0 i Turbo 8ERGXE ; 8BR/GX2/GXE | E | 1998 | XU10J2TE | M | | | 07/96 ▸ 03/99 | 0384F0 | **816918** | 610 359 | ALM |
| 1.9 TD 8BD/8B2/8BD/HX2/HXE 8FDHXE ; 8ED/8BD/HX2/HXE | D | 1905 | XUD9BTF,XUD9TE | M | | | 11/95 ▸ 03/99 | 0384F0 | **816918** | 610 359 | ALM |
| 1.9 TD 8BD/8B2/8BD/HX2/HXE 8FDHXE ; 8ED/8BD/HX2/HXE | D | 1905 | XUD9BTF,XUD9TE | M | | | 11/95 ▸ 03/99 | 0384F4 | **816918** | 610 359 | ALM |
| 1.9 TD 8EDHXP ; 8FDHXP 8BD/HXP | D | 1905 | XUD9BTF | A | | | 03/97 ▸ 03/99 | 0384F0 | **816918** | 610 359 | ALM |
| 1.9 TD 8EDHXP ; 8FDHXP 8BD/HXP | D | 1905 | XUD9BTF | A | | | 03/97 ▸ 03/99 | 0384F4 | **816918** | 610 359 | ALM |
| 2.0 HDi 8ERHZE ; 8FRHZE 8BR/HZE | D | 1997 | DW10ATED | M | | | 10/98 ▸ 03/99 | 0384F4 | **816918** | 610 359 | ALM |
| 2.0 HDi 8ERHZE ; 8FRHZE 8BR/HZE | D | 1997 | DW10ATED | M | | | 10/98 ▸ 03/99 | 0384F0 | **816918** | 610 359 | ALM |
| 2.1 TD 8EP8CE ; 8FP8CE 8BP/8C2/8CD/8CE | D | 2088 | XUD11BTE | M | | | 11/95 ▸ 03/99 | 0384F0 | **816918** | 610 359 | ALM |
| 2.1 TD 8EP8CE ; 8FP8CE 8BP/8C2/8CD/8CE | D | 2088 | XUD11BTE | M | | | 11/95 ▸ 03/99 | 0384F4 | **816918** | 610 359 | ALM |
| 2.2 HDi 16V 8C4HXF | D | 2179 | DW12TED4 | M | | C | 01/01 ▸ 04/03 | 0384F7 | **817578** | 610 359 | ALM |
| **406 (99>2004)** | | | | | | | | | | |
| 2.0 HDi 8BR/HSF/HZE/HZF 8ER/HSF/HZE/HZF ; 8FR/HSF/HZF | D | 1997 | DW10ATED | M | | | 04/99 ▸ 04/04 | 0384F3 | **817437** | 300 133,4 | ALB |
| 2.0 HDi 8BRHZR ; 8ERHZR | D | 1997 | DW10ATED | A | | Left/gauche | 01/01 ▸ 04/04 | 0384F3 | **817437** | 300 133,4 | ALB |
| 2.2 HDi 16V 8B4HXF ; 8E4HXF | D | 2179 | DW12TED4 | M | | | 10/00 ▸ 04/04 | 0384F3 | **817437** | 300 133,4 | ALB |
| 2.2 HDI 16V 8C4HXF | D | 2179 | DW12TED4 | M | | | 05/03 ▸ 10/04 | 0384F7 | **817578** | 610 359 | ALM |
| **407** | | | | | | | | | | |
| 1.6 HDi 16V 6D9/HYB/HYC/HZC 6E9/HYB/HYC/HZC ▸ 112283 | D | 1560 | DV6TED4 | M | | | 04/04 ▸ 09/07 | 0384G6 | **817639** | 300 133,4 | ALB |
| 2.0 HDi 16V 6DR/HRE/HRJ ; 6ER HRE/HRJ | D | 1997 | DW10BTED4 | A | | | 04/04 ▸ 09/07 | 0384G6 | **817639** | 300 133,4 | ALB |
| 2.0 HDi 16V 6ERHRH ; 6JRHRH 6DR/HRG/HRH | D | 1997 | DW10BTED4 | M | | | 04/04 ▸ | 0384G6 | **817639** | 300 133,4 | ALB |
| **505** | | | | | | | | | | |
| 2.5 TD 551A56 | D | 2498 | XD3T,XD3TE | M | | | 08/83 ▸ 1990 | 0384A5 | | | |
| 2.5 TD 551/A54/A59/D53/D59 F59 | D | 2498 | XD3T,XD3TE | A | | | 08/83 ▸ 1990 | 0384A5 | | | |
| **605 (89>94)** | | | | | | | | | | |
| 2.0 i Turbo 6BRGY2 | E | 1998 | XU10J2TE | M | | | 09/92 ▸ 06/94 | 0384C0 | | 610 359 | ALM |
| 2.0 i Turbo 6BRGY4 | E | 1998 | XU10J2TE | A | | | 09/92 ▸ 06/94 | 0384C0 | | 610 359 | ALM |
| 2.1 TD Turbo 6BP/8A2/HZ2 | D | 2088 | XUD11ATE | M | | | 04/90 ▸ 06/94 | 0384C0 | | 610 359 | ALM |
| 2.1 TD Turbo 6BP/8A4/HZ4 | D | 2088 | XUD11ATE | A | | | 04/90 ▸ 06/94 | 0384C0 | | 610 359 | ALM |
| **605 (94>99)** | | | | | | | | | | |
| 2.0 i Turbo 6BR/GX2/GXE | E | 1998 | XU10J2TE | M | | | 07/94 ▸ 05/99 | 0384C0 | | 610 359 | ALM |
| 2.0 i Turbo 6BR/GX4/GXP | E | 1998 | XU10J2TE | A | | | 07/94 ▸ 05/99 | 0384C0 | | 610 359 | ALM |
| 2.1 TD Turbo 6BP/8B2/8C2/8CE/HZ2 | D | 2088 | XUD11ATE,XUD11BTE | M | | | 07/94 ▸ 05/99 | 0384F1 | **816919** | 610 359 | ALM |
| 2.1 TD Turbo 6BP/8B2/8C2/HZ2 | D | 2088 | XUD11ATE,XUD11BTE | M | | | 07/94 ▸ 06/95 | 0384C0 | | 610 359 | ALM |
| 2.1 TD Turbo 6BP/8B4/HZ4 | D | 2088 | XUD11ATE | A | | | 07/94 ▸ 06/95 | 0384C0 | | 610 359 | ALM |
| 2.1 TD Turbo 6BP/8B4/8CP/HZ4 | D | 2088 | XUD11ATE,XUD11BTE | A | | | 06/95 ▸ 05/99 | 0384F1 | **816919** | 610 359 | ALM |
| 2.5 TD 6BT/HY2/HYE | D | 2446 | DK5ATE | M | | | 07/94 ▸ 05/99 | 0384E5 | **817204** | 310 126 | ALM |
| **607 (2000>2004)** | | | | | | | | | | |
| 2.0 HDi 9DR/HSB/HZB | D | 1997 | DW10ATED | M | | | 05/00 ▸ 09/04 | 0384F3 | **817437** | 300 133,4 | ALB |

Charge Air Cooler Refroidisseur d'air de suralimentation Ladeluftkühler Intercooler Intercooler Turbo Radyatörü
Intercooler Охладитель всасываемого воздуха töltőlevegő hűtő Intercooler Intercooler Intercooler



• **New** Nouveau **Nuevo** Novo **Nuovo** Nieuw **Neu** Nowość **Yeni** Новый Νέο **Nový**

| Type Ctr. | | CC | | AC | | | OE | Valeo | DIM. | TECH |
|---|---|---|---|---|---|---|---|---|---|---|
| **PEUGEOT (.../...)** | | | | | | | | | | |
| **607 (2000>2004) (.../...)** | | | | | | | | | | |
| 2.2 HDi 16V 9D4HXB | D | 2179 | DW12TED4 | M | | | 05/00 ▸ 06/03 | 0384F3 | **817437** | 300 133,4 ALB |
| 2.2 HDi 16V 9D4HXE | D | 2179 | DW12TED4 | A | | | 09/00 ▸ 09/04 | 0384F3 | **817437** | 300 133,4 ALB |
| **607 (2004>)** | | | | | | | | | | |
| 2.0 HDi 9URHSB | D | 1997 | DW10ATED | M | | | 10/04 ▸ | 0384F3 | **817437** | 300 133,4 ALB |
| 2.0 HDi 16V 9URHRH | D | 1997 | DW10BTED4 | M | | | 01/06 ▸ | 0384J8 | **•818895** | 300 147,5 ALB |
| 2.2 HDi 16V 9U4/HTH/HXG | D | 2179 | DW12BTED4,DW12TED4 | M | | | 10/04 ▸ | 0384F3 | **817437** | 300 133,4 ALB |
| 2.2 HDi 16V 9U4HXE | D | 2179 | DW12TED4 | A | | | 10/04 ▸ | 0384F3 | **817437** | 300 133,4 ALB |
| **806 (94>98)** | | | | | | | | | | |
| 2.0 i Turbo 221RA2 | E | 1998 | XU10J2TE | M | | | 07/94 ▸ 09/98 | 0384E7 | **816851** | 680 322 ALM |
| 1.9 TD 221/DA2/DC2/DH2 | D | 1905 | XUD9BTF,XUD9TE,XUD9TEF | M | | | 08/94 ▸ 09/98 | 0384E7 | **816851** | 680 322 ALM |
| 2.1 TD 221PA2 | D | 2088 | XUD11BTE | M | | | 06/96 ▸ 09/98 | 0384E7 | **816851** | 680 322 ALM |
| **806 (98>2002)** | | | | | | | | | | |
| 2.0 i Turbo CT 221RA2 | E | 1998 | XU10J2TE | M | | | 10/98 ▸ 05/02 | 0384E7 | **816851** | 680 322 ALM |
| 1.9 TD 221DH2 | D | 1905 | XUD9BTF | M | | | 10/98 ▸ 05/02 | 0384E7 | **816851** | 680 322 ALM |
| 2.0 HDi,2.0 HDi 16V AFR/HWB/HZA | D | 1997 | DW10ATED,DW10ATED4 | M | | | 08/99 ▸ 05/02 | 0384E7 | **816851** | 680 322 ALM |
| 2.1 TD 221PA2 | D | 2088 | XUD11BTE | M | | | 10/98 ▸ 05/02 | 0384E7 | **816851** | 680 322 ALM |
| **807** | | | | | | | | | | |
| 2.0 i 16V EARFNC | E | 1997 | EW10J4 | M | | | 06/02 ▸ 10/05 | 0384G0 | **817650** | 376 133,6 ALB |
| 2.0 HDi 16V EARHTB ; EBRHTB | D | 1997 | DW10ATED4 | M | | | 06/02 ▸ 05/06 | 0384G0 | **817650** | 376 133,6 ALB |
| 2.0 HDi 16V EAR/HME/HWB ; EBR HME/HWB | D | 1997 | DW10ATED4 | A | | | 03/03 ▸ 10/06 | 0384G0 | **817650** | 376 133,6 ALB |
| 2.2 HDi 16V EA4/HWB/HWG ; EB4 HWB/HWG | D | 2179 | DW12TED4 | M | | | 06/02 ▸ 06/06 | 0384G0 | **817650** | 376 133,6 ALB |
| **3008** | | | | | | | | | | |
| 1.6 HDi 110 16V 0U9HZH | D | 1560 | DV6TED4 | M | | | 09/09 ▸ | 0384L4 | **818837** | 300 147,4 ALB |
| **5008** | | | | | | | | | | |
| 1.6 HDi 110 16V 0A9HZH | D | 1560 | DV6TED4 | M | | | 09/09 ▸ | 0384L4 | **818837** | 300 147,4 ALB |
| **PEUGEOT** | | | | | | | | | | |
| **BOXER (94>2001)** | | | | | | | | | | |
| 1.9 TD 232B72 ; 231/A72/B72 C72 | D | 1905 | XUD9TEF | M | | | 02/94 ▸ 08/98 | 0384E4 | **817632** | 295 202 ALB |
| 2.5 TDi 231/B42/B44/C42/C44 J42/V42 ; 232/B42/B44/J42/J44/V44 ; 233/B42 J42/J44 | D | 2446 | DJ5TED | M | | | 01/97 ▸ 12/01 | 0384E4 | **817632** | 295 202 ALB |
| 2.8 D,2.8 HDi,2.8 TD 231/AL2/BL2/BL4/CH2 CL2/GH2/GL2/HL2/JL2/VH2/VL2 ; 232//BH2/BL2 BL4/GH2/GL2/GL4/HL2/HL4/JH2/JL2/JL4/KH2/KL2 KL4/LL2/LL4/VH2/VL2 ; 233/BL2/GH2/GL2/HL2 JH2/JL2/JL4/KH2/KL2/KL4/LL2/LL4 ; 234/GH2 GL2/KH2/KL2 | D | 2798 | 8140-43,8140-43S,8140-63 | M | | | 06/99 ▸ 12/01 | 0384E4 | **817632** | 295 202 ALB |
| **EXPERT (95>2003)** | | | | | | | | | | |
| 1.9 TD 222/DA2 ; 223/DA2 DH2 ; 225DA2 ; 226DA2 ; 224/DA2/DH2 | D | 1905 | XUD9BTF,XUD9TEF | M | | | 09/95 ▸ 12/03 | 0384E7 | **816851** | 680 322 ALM |
| 2.0 HDi,2.0 HDi 16V BAR/HWB ; BDR/HXA HXB/HZA ; BTRHWB ; BSR/HXA/HXB ; BYR/HXA HXB ; BZR/HWB/HXA/HXB | D | 1997 | DW10ATED,DW10ATED4,DW10BTED | M | | | 09/00 ▸ 12/03 | 0384E7 | **816851** | 680 322 ALM |
| **EXPERT II (2004>2006)** | | | | | | | | | | |
| 2.0 HDi,2.0 HDi 16V BBR/HXB/HZB ; BER HXB/HZB ; BTRHWB ; BURHZB ; BVRHWB ; BSR/HXB HZB ; BXRHWB ; BWR/HXB/HZB ; BYR/HXB/HZB BZR/HWB/HXB | D | 1997 | DW10ATED4,DW10BTED DW10BTED+L4 | M | | | 01/04 ▸ 12/06 | 0384E7 | **816851** | 680 322 ALM |
| **PARTNER (2002>)** | | | | | | | | | | |
| 1.6 HDi 16V GB9/HWC/HXC ; GC9 HWC/HXC ; GJ9/HWC/HXC | D | 1560 | DV6ATED4,DV6BTED4 | M | | | 01/06 ▸ 05/08 | 0384G5 | **•817706** | 300 147,5 ALB |
| **PARTNER (B9) (2008>)** | | | | | | | | | | |
| 1.6 HDi 16V 7A9/HTC/HXC ; 7B9 HTC/HXC ; 7J9/HTC/HXC | D | 1560 | DV6ATED4,DV6AUTED4,DV6BTED4 DV6BUTED4 | M | | | 05/08 ▸ | 0384L9 | **818866** | 300 147,4 ALB |

| Type Ctr. | | CC | | AC | | | OE | Valeo | DIM. | TECH |
|---|---|---|---|---|---|---|---|---|---|---|
| **PEUGEOT (.../...)** | | | | | | | | | | |
| **PARTNER (B9) (2008>) (.../...)** | | | | | | | | | | |
| 1.6 HDi 16V 7J9HZC | D | 1560 | DV6TED4 | M | | 11/09 ▸ | 0384L4 | **818837** | 300 147,4 | ALB |
| **RANCH (2002>)** | | | | | | | | | | |
| 1.6 HDi 16V GC9HXC ; GJ9HXC GB9/HW/HXC | D | 1560 | DV6ATED4,DV6BTED4 | M | | 01/06 ▸ 05/08 | 0384G5 | **•817706** | 300 147,5 | ALB |
| **PORSCHE** | | | | | | | | | | |
| **CAYENNE (2003>2006)** | | | | | | | | | | |
| 4.5 i V8 32V 9P3LA4 ; 9P4LA6 | E | 4511 | M48.00 | M | | Right/Droite | 03/03 ▸ 12/06 | 95511080400 | **818815** | 287 292 ALB |
| 4.5 i V8 32V 9P3LA4 ; 9P4LA6 | E | 4511 | M48.00 | M | | Left/gauche | 03/03 ▸ 12/06 | 95511080300 | **818814** | 292 287 ALB |
| 4.5 i V8 32V 9P3LA4 ; 9P4LA9<br>4.5 i V8 Turbo 32V 9P4LA6 ; 9P3LA8 | E | 4511 | M48.00,M48.50 | A | | Left/gauche | 03/03 ▸ 12/06 | 95511080300 | **818814** | 292 287 ALB |
| 4.5 i V8 32V 9P3LA4 ; 9P3LA8<br>4.5 i V8 Turbo 32V 9P4LA6 ; 9P4LA9 | E | 4511 | M48.00,M48.50 | A | | Right/Droite | 03/03 ▸ 12/06 | 95511080400 | **818815** | 287 292 ALB |
| **RENAULT** | | | | | | | | | | |
| **SUPER 5** | | | | | | | | | | |
| 1.4 Turbo C405 | E | 1397 | C1J | M | | | 07/84 ▸ 08/90 | 7700762960 | | 184 204 ALB |
| **R9** | | | | | | | | | | |
| 1.4 Turbo L425 | E | 1397 | C1J | M | | | 09/84 ▸ 09/88 | 7700762960 | | 184 204 ALB |
| **R11** | | | | | | | | | | |
| 1.4 Turbo B375 ; C375 | E | 1397 | C1J | M | | | 09/83 ▸ 07/89 | 7700762960 | | 184 204 ALB |
| **AVANTIME** | | | | | | | | | | |
| 2.0 i Turbo 16V DE0/U/V | E | 1998 | F4R | M | | C | 11/01 ▸ 03/03 | 6025312322 | **817925** | 600 326 ALB |
| 2.0 i Turbo 16V DE0/U/V | E | 1998 | F4R | A | | C | 11/01 ▸ 03/03 | 6025312322 | **817925** | 600 326 ALB |
| **CLIO II (2001>)** | | | | | | | | | | |
| 1.5 dCi CB08 ; BB0/8 ; SB08 LB2/3/E | D | 1461 | K9K | M | | | 04/01 ▸ 03/07 | 8200252209 | **817923** | 345 370 ALB |
| **CLIO III (2005>)** | | | | | | | | | | |
| 1.5 dCi BR0/F/G/H/V/W ; BR1 A/B/C/F/G/N ; CR0/F/G/H/V/W ; CR1/C/G/N KR0/F/G/H ; KR1/C/N ; SR0/F/G/H | D | 1461 | K9K | M | | | 09/05 ▸ | 8200471888 | **817999** | 210 203,8 ALB |
| 1.5 dCi BR0/F/G/H/V/W ; BR1 A/B/C/F/G/N ; CR0/F/G/H/V/W ; CR1/C/G/N KR0/F/G/H ; KR1/C/N ; SR0/F/G/H | D | 1461 | K9K | M | | | 09/05 ▸ | 8200471884 | **817999** | 210 203,8 ALB |
| **CLIO III FL (2009>)** | | | | | | | | | | |
| 1.5 dCi 105,1.5 dCi 70 BR0/F/G/H ; BR1/C/N<br>1.5 dCi 85 T ; CR0/F/G/H ; CR1 C/N/T ; KR0/F/G/H ; KR1/C/N ; SR0/F/G/H | D | 1461 | K9K | M | | | 04/09 ▸ | 8200471888 | **817999** | 210 203,8 ALB |
| **CLIO III** | | | | | | | | | | |
| 1.5 dCi CR2V0H | D | 1461 | K9K | M | +/- | EURO V | 07/11 ▸ | 144618748R | **•818251** | 210 203,8 ALB |
| **ESPACE II (91>96)** | | | | | | | | | | |
| 2.1 dT,2.1 dTv J63/3/4/5/D/E ; S63 5/D | D | 2068 | J8S | M | | Right/Droite | 01/91 ▸ 08/96 | 7700752904 | | 184 202 ALB |
| **ESPACE III (96>2000)** | | | | | | | | | | |
| 1.9 dTi JE0M | D | 1870 | F9Q | M | + | | 10/99 ▸ 06/00 | 7701045349 | **817924** | 600 333 ALB |
| 2.2 dT JE0/E/H | D | 2188 | G8T | M | + | | 09/96 ▸ 10/97 | 7701040663 | **816836** | 600 377 ALM |
| 2.2 dT JE0/E/H | D | 2188 | G8T | M | - | | 09/96 ▸ 11/97 | 7701040663 | **816836** | 600 377 ALM |
| **ESPACE III (2000>2002)** | | | | | | | | | | |
| 2.2 dCi JE0/K/S | D | 2188 | G9T | M | | C | 07/00 ▸ 10/02 | 6025312322 | **817925** | 600 326 ALB |
| **ESPACE IV (2002>2006)** | | | | | | | | | | |
| 2.0 i 16V,2.0 i Turbo 16V JK1D ; JK0/8/A/B/D/K L/N | E | 1998 | F4R | M | | | 09/02 ▸ 02/06 | 8200008761 | **817926** | 680 305 ALB |
| 2.0 i Turbo 16V JK1D ; JK0/8/A/B/D/N | E | 1998 | F4R | A | | | 09/02 ▸ 02/06 | 8200008761 | **817926** | 680 305 ALB |
| 1.9 dCi JK0/G/U | D | 1870 | F9Q | M | | | 09/02 ▸ 02/06 | 8200008761 | **817926** | 680 305 ALB |

Charge Air Cooler Refroidisseur d'air de suralimentation Ladeluftkühler Intercooler Intercooler Turbo Radyatörü
Intercooler Охладитель всасываемого воздуха töltőlevegő hűtő Intercooler Intercooler Intercooler



• **New** Nouveau **Nuevo** Novo **Nuovo** Nieuw **Neu** Nowość **Yeni** Новый Νέο **Nový**

| Type Ctr. | | CC | | | AC | | | OE | Valeo | DIM. | | TECH |
|---|---|---|---|---|---|---|---|---|---|---|---|---|

# RENAULT (.../...)

## ESPACE IV (2002>2006) (.../...)

| | | | | | | | | | | | | | |
|---|---|---|---|---|---|---|---|---|---|---|---|---|---|
| 2.2 dCi 16V | JK0/H/T | D | 2188 | G9T | M | | | 09/02 ▸ 02/06 | 8200075810 | **817927** | 680 | 392 | ALB |
| 2.2 dCi 16V | JK0H | D | 2188 | G9T | A | | | 09/02 ▸ 02/06 | 8200075810 | **817927** | 680 | 392 | ALB |

## ESPACE IV PHASE 2 (2006>)

| | | | | | | | | | | | | | |
|---|---|---|---|---|---|---|---|---|---|---|---|---|---|
| 2.0 i 16V,2.0 i Turbo 16V | JK0/9/A | E | 1998 | F4R | M | | | 03/06 ▸ | 8200008761 | **817926** | 680 | 305 | ALB |
| 2.0 i Turbo 16V | JK0A | E | 1998 | F4R | A | | | 05/07 ▸ | 8200008761 | **817926** | 680 | 305 | ALB |
| 2.0 dCi 16V | JK0/1/2/3/4 | D | 1995 | M9R | M | | | 03/06 ▸ | 8200292773 | **817828** | 680 | 147,5 | ALB |
| 2.0 dCi 16V | JK0/3/4 | D | 1995 | M9R | A | | | 05/07 ▸ | 8200292773 | **817828** | 680 | 147,5 | ALB |
| 2.2 dCi 16V | JK0H | D | 2188 | G9T | M | | | 03/06 ▸ | 8200075810 | **817927** | 680 | 392 | ALB |
| 2.2 dCi 16V | JK07 | D | 2188 | G9T | A | | | 03/06 ▸ | 8200292773 | **817828** | 680 | 147,5 | ALB |
| 2.2 dCi 16V | JK0H | D | 2188 | G9T | A | | | 03/06 ▸ | 8200075810 | **817927** | 680 | 392 | ALB |
| 3.0 dCi V6 24V | JK0/E/Y | D | 2958 | P9X | A | | | 03/06 ▸ | 8200301884 | **818772** | 680 | 147,4 | ALB |

## LAGUNA (94>98)

| | | | | | | | | | | | | | |
|---|---|---|---|---|---|---|---|---|---|---|---|---|---|
| 2.2 Dt | B569 | D | 2188 | G8T | M | | | 03/96 ▸ 04/98 | 7701040663 | **816836** | 600 | 377 | ALM |

## LAGUNA (98>2000)

| | | | | | | | | | | | | | |
|---|---|---|---|---|---|---|---|---|---|---|---|---|---|
| 1.9 dCi,1.9 dTi | B56/J/W | D | 1870 | F9Q | M | | | 05/98 ▸ 12/00 | 7701045349 | **817924** | 600 | 333 | ALB |
| 1.9 dTi | B56J | D | 1870 | F9Q | A | | | 07/99 ▸ 12/00 | 7701045349 | **817924** | 600 | 333 | ALB |
| 2.2 dT | B569 | D | 2188 | G8T | M | | | 05/98 ▸ 12/00 | 7701040663 | **816836** | 600 | 377 | ALM |

## LAGUNA NEVADA (95>98)

| | | | | | | | | | | | | | |
|---|---|---|---|---|---|---|---|---|---|---|---|---|---|
| 2.2 D | S56/6/F | D | 2188 | G8T | M | | | 07/95 ▸ 04/98 | 7701045349 | **817924** | 600 | 333 | ALB |
| 2.2 dT | K569 | D | 2188 | G8T | M | | | 03/96 ▸ 04/98 | 7701040663 | **816836** | 600 | 377 | ALM |

## LAGUNA NEVADA (98>2000)

| | | | | | | | | | | | | | |
|---|---|---|---|---|---|---|---|---|---|---|---|---|---|
| 1.9 dCi,1.9 dTi | S56J ; K56/J/W | D | 1870 | F9Q | M | | | 05/98 ▸ 12/00 | 7701045349 | **817924** | 600 | 333 | ALB |
| 1.9 dTi | K56J | D | 1870 | F9Q | A | | | 09/99 ▸ 12/00 | 7701045349 | **817924** | 600 | 333 | ALB |
| 2.2 dT | K569 | D | 2188 | G8T | M | | | 05/98 ▸ 12/00 | 7701040663 | **816836** | 600 | 377 | ALM |

## LAGUNA II (2001>)

| | | | | | | | | | | | | | |
|---|---|---|---|---|---|---|---|---|---|---|---|---|---|
| 1.9 dCi | BG0/E/G/R ; KG0/E/G R | D | 1870 | F9Q | M | | C | 01/01 ▸ 02/05 | 8200008761 | **817926** | 680 | 305 | ALB |
| 1.9 dCi | BG0E ; KG0E | D | 1870 | F9Q | A | | C | 01/01 ▸ 02/05 | 8200008761 | **817926** | 680 | 305 | ALB |
| 2.2 dCi 16V | BG0F ; KG0F | D | 2188 | G9T | M | | C | 01/01 ▸ 02/05 | 8200075810 | **817927** | 680 | 392 | ALB |
| 2.2 dCi 16V | BG0F | D | 2188 | G9T | A | | C | 01/01 ▸ 02/05 | 8200075810 | **817927** | 680 | 392 | ALB |

## LAGUNA II (2005>)

| | | | | | | | | | | | | | |
|---|---|---|---|---|---|---|---|---|---|---|---|---|---|
| 2.0 i Turbo 16V | BG0/S/T/Z ; BG1/L/M Y ; KG0/S/T/Z ; KG1/L/Y | E | 1998 | F4R | M | | | 03/05 ▸ 09/07 | 8200008761 | **817926** | 680 | 305 | ALB |
| 2.0 i Turbo 16V | BG0/S/Z ; BG1/L/M KG0/3/S/Z | E | 1998 | F4R | A | | | 03/05 ▸ 09/07 | 8200008761 | **817926** | 680 | 305 | ALB |
| 1.9 dCi | BG0/5/8/E/G/R ; BG1 0/2/3/A/V/W ; KG0/5/8/E/G/R ; KG1/0/2/3/A/V W | D | 1870 | F9Q | M | | | 03/05 ▸ 09/07 | 8200292773 | **817828** | 680 | 147,5 | ALB |
| 1.9 dCi | BG0/E/G/R ; KG0/E/G R | D | 1870 | F9Q | M | | | 03/05 ▸ 09/07 | 8200008761 | **817926** | 680 | 305 | ALB |
| 1.9 dCi | KG12 ; BG1/2/V | D | 1870 | F9Q | A | | | 03/05 ▸ 09/07 | 8200292773 | **817828** | 680 | 147,5 | ALB |
| 2.0 dCi,2.0 dCi 16V | BG1/4/S/T ; KG1/4/S T | D | 1995 | M9R | M | | | 07/05 ▸ 09/07 | 8200292773 | **817828** | 680 | 147,5 | ALB |
| 2.2 dCi,2.2 dCi 16V | BG1N ; BG0/9/F KG1N ; KG0/9/F | D | 2188 | G9T | M | | | 03/05 ▸ 09/07 | 8200075810 | **817927** | 680 | 392 | ALB |
| 2.2 dCi 16V | BG09 ; KG09 | D | 2188 | G9T | M | | | 03/05 ▸ 09/07 | 8200292773 | **817828** | 680 | 147,5 | ALB |
| 2.2 dCi,2.2 dCi 16V | BG0F ; KG0F | D | 2188 | G9T | A | | | 03/05 ▸ 09/07 | 8200075810 | **817927** | 680 | 392 | ALB |

## MEGANE (95>99)

| | | | | | | | | | | | | | |
|---|---|---|---|---|---|---|---|---|---|---|---|---|---|
| 1.9 dT | BA0/9/Y ; SA0/9/Y | D | 1870 | F8Q | M | | | 11/95 ▸ 02/97 | 8200047162 | **•817490** | 204 | 183,4 | ALB |
| 1.9 dT | BA0/9/Y ; SA0/9/Y | D | 1870 | F8Q | M | | | 11/95 ▸ 06/98 | 8200175069 | **•817490** | 204 | 183,4 | ALB |

## MEGANE (98>2003)

| | | | | | | | | | | | | | |
|---|---|---|---|---|---|---|---|---|---|---|---|---|---|
| 1.9 dCi,1.9 dTi | BA0/5/N ; DA0/5/N KA0/5/N ; SA0/5/N | D | 1870 | F9Q | M | | | 10/98 ▸ 02/03 | 8200175069 | **•817490** | 204 | 183,4 | ALB |
| 1.9 dTi | DA0N ; KA0N ; BA0/N | D | 1870 | F9Q | A | | | 10/98 ▸ 02/03 | 8200175069 | **•817490** | 204 | 183,4 | ALB |

## MEGANE CLASSIC (96>99)

| | | | | | | | | | | | | | |
|---|---|---|---|---|---|---|---|---|---|---|---|---|---|
| 1.9 dT,1.9 dTi | LA1U ; LA0/8/K/N/Y | D | 1870 | F8Q,F9Q | M | | Left/gauche | 09/96 ▸ 02/99 | 8200175069 | **•817490** | 204 | 183,4 | ALB |
| 1.9 dT | LA0/K/Y | D | 1870 | F8Q | M | | | 09/96 ▸ 08/97 | 8200047162 | **•817490** | 204 | 183,4 | ALB |
| 1.9 dTi | LA0N | D | 1870 | F9Q | A | | Left/gauche | 04/97 ▸ 02/99 | 8200175069 | **•817490** | 204 | 183,4 | ALB |

## MEGANE CLASSIC (99>2002)

| | | | | | | | | | | | | | |
|---|---|---|---|---|---|---|---|---|---|---|---|---|---|
| 1.9 dCi,1.9 dTi | LA1U ; LA0/1/5 | D | 1870 | F9Q | M | | Left/gauche | 03/01 ▸ 08/02 | 8200175069 | **•817490** | 204 | 183,4 | ALB |

| Type Ctr. | | CC | | AC | | | OE | Valeo | DIM. | TECH |
|---|---|---|---|---|---|---|---|---|---|---|
| **RENAULT** (.../...) | | | | | | | | | | |
| **MEGANE CLASSIC (99>2002) (.../...)** | | | | | | | | | | |
| 1.9 dCi LA05 | D | 1870 | F9Q | A | | Left/gauche | 03/01 ▸ 08/02 | 8200175069 | •817490 | 204 183,4 ALB |
| **MÉGANE II (2002>)** | | | | | | | | | | |
| 2.0 i Turbo 16V BM0/M/W ; BM1/1/T/V EM0W ; EM1T ; CM0/M/W | E | 1998 | F4R | M | | | 03/04 ▸ 01/09 | 8200115540 | 818727 | 584 187 ALB |
| 1.5 dCi BM0/2/F/T ; BM1/3/6 E/F ; CM0/2/F ; CM1/6/E/F ; EM1/6/E ; GM0/2 F ; GM1/6/E/F ; KM0/2/F/T ; KM1/3/6/E/F LM0/2/F/T ; LM1/3/6/E/F ; SM0/2/F ; SM1/6/E F | D | 1461 | K9K | M | | | 09/02 ▸ | 8200115540 | 818727 | 584 187 ALB |
| 1.5 dCi CM02 ; KM02 ; LM02 BM0/2 | D | 1461 | K9K | A | | | 09/03 ▸ 12/05 | 8200115540 | 818727 | 584 187 ALB |
| 1.9 dCi BM0/0/G/L ; BM1/4/7 C/D/G ; CM0/0/G/L ; EM0G ; CM1/4/7/C/D/G EM1/4/7/C/D/G ; KM0/0/G/L ; KM1/4/7/C/D/G LM0/0/G/L ; LM1/4/7/C/D/G | D | 1870 | F9Q | M | | | 09/02 ▸ | 8200115540 | 818727 | 584 187 ALB |
| 1.9 dCi EM1/4/D | D | 1870 | F9Q | A | | | 05/05 ▸ 07/09 | 8200115540 | 818727 | 584 187 ALB |
| **MÉGANE III (2008>)** | | | | | | | | | | |
| 2.0 TCe 180 16V BZ0/K ; KZ0K ; DZ0/4 K | E | 1998 | F4R | M | | | 10/08 ▸ | 144960022R | 818870 | 657 105,1 ALB |
| 1.5 dCi 105,1.5 dCi 110 1.5 dCi 85,1.5 dCi 90 BZ0/A/B/C/D ; BZ1/A F/G/M/W ; DZ0/A/B/C D ; DZ1/A/F/G/M/W ; KZ0/C/D ; KZ1/A/F/G/M/W | D | 1461 | K9K | M | | | 10/08 ▸ | 144960006R | 818878 | 657 91 ALB |
| 1.9 dCi 130 BZ0/J/N ; BZ1/J/K/S DZ0/J/N ; DZ1/J/K/S ; KZ0/J/N | D | 1870 | F9Q | M | | | 10/08 ▸ | 144960022R | 818870 | 657 105,1 ALB |
| 2.0 dCi 160 DZ0L ; KZ0L ; BZ0/L | D | 1995 | M9R | M | | | 10/08 ▸ | 144960023R | 818869 | |
| 2.0 dCi 150 DZ0Y ; KZ0Y ; BZ0/Y | D | 1995 | M9R | A | | | 10/08 ▸ | 144960023R | 818869 | |
| **MEGANE SCENIC (96>99)** | | | | | | | | | | |
| 1.9 dT,1.9 dTi FA0/Y ; JA0/K/N/Y | D | 1870 | F8Q,F9Q | M | | Left/gauche | 10/96 ▸ 09/99 | 8200175069 | •817490 | 204 183,4 ALB |
| 1.9 dT,1.9 dTi FA0/Y ; JA0/K/N/Y | D | 1870 | F8Q,F9Q | M | | | 10/96 ▸ 09/99 | 8200047162 | •817490 | 204 183,4 ALB |
| **MEGANE SCENIC (99>2003)** | | | | | | | | | | |
| 2.0 i 16V JA1D | E | 1998 | F4R | M | | Left/gauche | 08/01 ▸ 04/03 | 8200175069 | •817490 | 204 183,4 ALB |
| 1.9 dCi,1.9 dTi JA0/1/5/N ; JA1/F/U | D | 1870 | F9Q | M | | Left/gauche | 09/99 ▸ 04/03 | 8200175069 | •817490 | 204 183,4 ALB |
| 1.9 dCi,1.9 dTi JA0/5/N | D | 1870 | F9Q | A | | Left/gauche | 09/99 ▸ 04/03 | 8200175069 | •817490 | 204 183,4 ALB |
| **MODUS (2004>2007)** | | | | | | | | | | |
| 1.5 dCi JP0H | D | 1461 | K9K | M | | | 01/05 ▸ | 8200471884 | 817999 | 210 203,8 ALB |
| 1.5 dCi FP0/D/E/G ; JP0/D/E F/G/H 050314 ▸ | D | 1461 | K9K | M | | | 03/05 ▸ 12/07 | 8200471888 | 817999 | 210 203,8 ALB |
| 1.5 dCi FP0/D/E/G ; JP0/D/E F/G/H | D | 1461 | K9K | M | | | 09/04 ▸ 09/05 | 8200170504 | | 210 203,8 ALB |
| **MODUS (2008>)** | | | | | | | | | | |
| 1.5 dCi 105,1.5 dCi 65 1.5 dCi 70,1.5 dCi 85 JP1B ; JP0/2/9/F/G/H | D | 1461 | K9K | M | | | 01/08 ▸ | 8200471888 | 817999 | 210 203,8 ALB |
| **MODUS** | | | | | | | | | | |
| 1.5 dCi JP3DM5 | D | 1461 | K9K | M | +/- | EURO V | 07/11 ▸ | 144618748R | •818251 | 210 203,8 ALB |
| **SAFRANE** | | | | | | | | | | |
| 2.1 Dt B546 | D | 2068 | J8S | M | | | 05/92 ▸ 09/96 | 7701035969 | | 617 181 ALB |
| 2.2 TD B54G | D | 2188 | G8T | M | | | 09/96 ▸ 11/00 | 7701042654 | | 617 181 ALB |
| 2.5 Dt B548 | D | 2499 | S8U | M | | | 04/93 ▸ 09/96 | 7701035969 | | 617 181 ALB |
| 2.5 Dt B548 | D | 2499 | S8U | A | | | 04/93 ▸ 09/96 | 7701035969 | | 617 181 ALB |
| **SCENIC II** | | | | | | | | | | |
| 2.0 i Turbo 16V JM0W ; JM1T | E | 1998 | F4R | M | | | 03/04 ▸ 07/08 | 8200115540 | 818727 | 584 187 ALB |
| 1.5 dCi JM0/2/F/T ; JM2A JM1/3/6/E/F | D | 1461 | K9K | M | | | 05/03 ▸ | 8200115540 | 818727 | 584 187 ALB |
| 1.5 dCi JM02 | D | 1461 | K9K | A | | | 05/03 ▸ 07/05 | 8200115540 | 818727 | 584 187 ALB |
| 1.9 dCi JM0/G/L ; JM2C ; JM1 2/4/5/7/D/G | D | 1870 | F9Q | M | | | 05/03 ▸ 11/09 | 8200115540 | 818727 | 584 187 ALB |
| **SCENIC III (2009>)** | | | | | | | | | | |
| 1.5 dCi 105,1.5 dCi 110 1.5 dCi 85 JZ0/7/A/B/D ; JZ1/G M/W | D | 1461 | K9K | M | | | 04/09 ▸ | 144960006R | 818878 | 657 91 ALB |

Charge Air Cooler Refroidisseur d'air de suralimentation Ladeluftkühler Intercooler Intercooler Turbo Radyatörü
Intercooler Охладитель всасываемого воздуха töltőlevegő hűtő Intercooler Intercooler Intercooler



• **New** Nouveau **Nuevo** Novo **Nuovo** Nieuw **Neu** Nowość **Yeni** Новый Νέο **Novy**

| Type Ctr. | | CC | | | AC | | | OE | Valeo | DIM. | | TECH |
|---|---|---|---|---|---|---|---|---|---|---|---|---|
| **RENAULT (.../...)** | | | | | | | | | | | | |
| **SCENIC III (2009>) (.../...)** | | | | | | | | | | | | |
| 1.9 dCi 130 | JZ0/J/N ; JZ1/J/K/S | D | 1870 | F9Q | M | | | 04/09 ▸ | 144960022R | **818870** | 657 105,1 | ALB |
| 2.0 dCi 160 | JZ0L | D | 1995 | M9R | M | | | 04/09 ▸ | 144960023R | **818869** | | |
| 2.0 dCi 150 | JZ0Y | D | 1995 | M9R | A | | | 04/09 ▸ | 144960023R | **818869** | | |
| **TWINGO III (2007>)** | | | | | | | | | | | | |
| 1.2 i TCE 16V | CN0C | E | 1149 | D4F | M | | | 07/07 ▸ | 8200369311 | **818835** | 183 189,7 | ALB |
| 1.5 dCi | CN0E | D | 1461 | K9K | M | | | 07/07 ▸ | 8200369311 | **818835** | 183 189,7 | ALB |
| **TWINGO III (FL)** | | | | | | | | | | | | |
| 1.2 i TCE 16V | CN0C | E | 1149 | D4F | M | +/- | EURO V | 09/11 ▸ | 144613211R | **•818250** | 189,7 183,4 | ALB |
| **VEL SATIS (2002>2005)** | | | | | | | | | | | | |
| 2.0 i Turbo 16V | BJ0/K/P | E | 1998 | F4R | M | | | 01/02 ▸ 01/05 | 8200008761 | **817926** | 680 305 | ALB |
| 2.0 i Turbo 16V | BJ0/K/P | E | 1998 | F4R | A | | | 01/02 ▸ 01/05 | 8200008761 | **817926** | 680 305 | ALB |
| 2.2 dCi 16V | BJ0/E/F/G/H/M | D | 2188 | G9T | M | | | 01/02 ▸ 01/05 | 8200075810 | **817927** | 680 392 | ALB |
| 2.2 dCi 16V | BJ0F | D | 2188 | G9T | A | | | 01/02 ▸ 01/05 | 8200075810 | **817927** | 680 392 | ALB |
| **VEL SATIS (2005>)** | | | | | | | | | | | | |
| 2.0 i Turbo 16V | BJ0W | E | 1998 | F4R | M | | | 02/05 ▸ | 8200008761 | **817926** | 680 305 | ALB |
| 2.0 i Turbo 16V | BJ0W | E | 1998 | F4R | A | | | 02/05 ▸ | 8200008761 | **817926** | 680 305 | ALB |
| 2.2 dCi 16V | BJ0/H/M | D | 2188 | G9T | M | | | 02/05 ▸ 07/06 | 8200075810 | **817927** | 680 392 | ALB |
| 2.2 dCi 16V | BJ0F | D | 2188 | G9T | A | | | 02/05 ▸ 07/06 | 8200075810 | **817927** | 680 392 | ALB |
| **RENAULT** | | | | | | | | | | | | |
| **KANGOO (97>2003)** | | | | | | | | | | | | |
| 1.9 dCi | FC0V ; KC0V | D | 1870 | F9Q | M | | C | 01/02 ▸ 02/03 | 8200140970 | **817654** | 480 133,4 | ALB |
| 1.9 dCi | FC0V ; KC0V | D | 1870 | F9Q | M | | C | 01/02 ▸ | 8200073413 | **817654** | 480 133,4 | ALB |
| **KANGOO (2003>2009)** | | | | | | | | | | | | |
| 1.5 dCi | FC0/7/8/9 ; FC1/G/S KC0/7/8/9 ; KC1/G/S | D | 1461 | K9K | M | | | 03/03 ▸ 06/08 | 8200221885 | **818820** | 530 100 | ALB |
| 1.9 dCi | FC0V ; KC0V | D | 1870 | F9Q | M | | | 03/03 ▸ 12/06 | 8200140970 | **817654** | 480 133,4 | ALB |
| **MASTER (97>2003)** | | | | | | | | | | | | |
| 1.9 dCi,1.9 dTi | FD0/L/P ; JD1L ; JD0 L/P | D | 1870 | F9Q | M | | | 02/01 ▸ 09/03 | 7701043695 | **817115** | 680 181,5 | ALB |
| 2.2 dCi | ED0/G ; FD1N ; FD2G FD3G ; HD0G ; HD1G ; FD0/G/N ; JD1G ; JDNN UD0G ; UD1G ; JD0/G/N | D | 2188 | G9T | M | | | 11/00 ▸ 09/03 | 7701043695 | **817115** | 680 181,5 | ALB |
| 2.5 dCi | FD1M ; JD0M ; JDNM FD0/M | D | 2464 | G9U | M | | | 12/00 ▸ 09/03 | 7701043695 | **817115** | 680 181,5 | ALB |
| 2.8 dTi,2.8 dTi L2H1 | FD0C ; HD0C ; JD0B UD0C ; ED0/C | D | 2800 | S9W | M | +/- | | 01/98 ▸ 09/03 | 7701043695 | **817115** | 680 181,5 | ALB |
| **MASTER (2003>2006)** | | | | | | | | | | | | |
| 1.9 dCi | FD0P ; JD0P | D | 1870 | F9Q | M | | | 10/03 ▸ 05/06 | 7701057121 | **817637** | 740 145,6 | ALB |
| 2.2 dCi | JD0N | D | 2188 | G9T | M | | | 10/03 ▸ 05/06 | 7701057121 | **817637** | 740 145,6 | ALB |
| 2.5 dCi,2.5 dCi 100 2.5 dCi 114 | EL0D ; ED0/U/V ; FD0 U/V ; FDA/1/2 ; FDB 1/2 ; FL0D ; FDC/1/2 ; JD0M ; HD0/U/V JL0D ; JDA/1/2 ; UD0/U/V | D | 2464 | G9U | M | | | 10/03 ▸ 05/06 | 7701057121 | **817637** | 740 145,6 | ALB |
| 2.5 dCi | FL0D ; JL0D ; EL0/D | D | 2464 | G9U | A | | | 10/03 ▸ 05/06 | 7701057121 | **817637** | 740 145,6 | ALB |
| 3.0 dCi | FD0S ; HD0S ; JD0T UD0S ; ED0/S | D | 2953 | ZD3 | M | | | 10/03 ▸ 05/06 | 7701057121 | **817637** | 740 145,6 | ALB |
| **MASTER (2006>)** | | | | | | | | | | | | |
| 2.5 dCi 100,2.5 dCi 120 2.5 dCi 146,2.5 dCi 150 | ED0/1/2/Y ; ED4/1/2 Y ; ED8/1/2/Y ; ED9 1/2/Y ; FD0/1/2/3/Y ; FD2/1/2/Y ; FD3/1/2/Y FD7/1/2/Y ; FD8/1/2/Y ; FD9/1/2/Y ; HD0/1/2 Y ; HD1/1/2/Y ; JD0/1/2/Y ; JD1/1/2/Y ; UD0 1/2/Y ; UD1/1/2/Y ; UD4/1/2/Y ; UD5/1/2/Y UD6/1/2/Y ; UD8/1/2/Y | D | 2464 | G9U | M | | | 06/06 ▸ | 7701057121 | **817637** | 740 145,6 | ALB |
| **TRAFIC (2001>2006)** | | | | | | | | | | | | |
| 1.9 dCi | EL0/C ; FL0/B/C JL0/B/C | D | 1870 | F9Q | M | | C | 04/01 ▸ 07/06 | 7700312903 | **817554** | 540 175,6 | ALB |

| Type Ctr. | | CC | | AC | | | OE | Valeo | DIM. | TECH |
|---|---|---|---|---|---|---|---|---|---|---|
| **RENALT (.../...)** | | | | | | | | | | |
| **TRAFIC (2001>2006) (.../...)** | | | | | | | | | | |
| 2.5 dCi 16V FL0D ; JL0D ; EL0/D | D | 2464 | G9U | M | | | 09/02 ▸ 07/06 | 8200219497 | **817636** | 540 175,6 | ALB |
| **TRAFIC II (2006>)** | | | | | | | | | | |
| 2.0 dCi EL0/H/M ; FL0/H/M JL0/H/M | D | 1995 | M9R | M | | | 07/06 ▸ | 8200411160 | **818771** | 540 175,6 | ALB |
| 2.5 dCi EL0/J/R/V ; FL0/J/R V ; JL0/J/R/V | D | 2464 | G9U | M | | | 07/06 ▸ | 8200411160 | **818771** | 540 175,6 | ALB |
| **RENAULT VEHICULES INDUSTRIELS** | | | | | | | | | | |
| **MASCOTT** | | | | | | | | | | |
| 2.8 TD,2.8 dti | D | 2798 | 8140-43C,8140-43S | M | | C | 07/99 ▸ 06/04 | 5010382814 | **817380** | 627 181,5 | ALB |
| **SAAB** | | | | | | | | | | |
| **9-3 (2002>)** | | | | | | | | | | |
| 1.8 t Turbo 16V,2.0 t Turbo 16V | F | 1998 | B207L,B207R | M | | | 07/07 ▸ | 12788019 | **817729** | 647 400 | ALB |
| 1.8 t Turbo 16V,2.0 t Turbo 16V | F | 1998 | B207L,B207R | A | | | 07/07 ▸ | 12788019 | **817729** | 647 400 | ALB |
| 1.8 t Turbo 16V 2.0 t Turbo 16V FB/45F/45S/45Y/55F 75F/75S ; FD/45F/45S 45Y ; FF/45F/45S | E | 1998 | B207E,B207L,B207R | M | | | 09/02 ▸ | 12788019 | **817729** | 647 400 | ALB |
| 1.8 t Turbo 16V 2.0 t Turbo 16V FB/49F/49S/49Y/59F 59S/59Y/79F ; FD/49F 49S/49Y ; FF/49F/49S | E | 1998 | B207E,B207L,B207R | A | | | 09/02 ▸ | 12788019 | **817729** | 647 400 | ALB |
| 2.0 t Turbo 16V FD/41M/51M/56M | E | 2290 | B235R | M | | | 06/05 ▸ | 12788019 | **817729** | 647 400 | ALB |
| 2.8 t V6 24V | E | 2792 | B284L | M | | | 06/05 ▸ | 12800599 | **817998** | 647 401,2 | ALB |
| 2.8 t V6 24V | E | 2792 | B284 | M | | | 06/08 ▸ | 12788019 | **817729** | 647 400 | ALB |
| 2.8 t V6 24V | E | 2792 | B284L | A | | | 06/05 ▸ | 12800599 | **817998** | 647 401,2 | ALB |
| 2.8 t V6 24V | E | 2792 | B284 | A | | | 06/08 ▸ | 12788019 | **817729** | 647 400 | ALB |
| 1.9 TiD,1.9 TiD 16V 51048288 ▸ | D | 1910 | Z19DT,Z19DTH | M | | | 2005 ▸ | 12765753 | **818818** | 648 414,5 | ALM |
| 1.9 TiD 16V | D | 1910 | Z19DTH | M | | | 01/08 ▸ | 12773072 | **•818840** | | |
| 1.9 TiD 16V 51048288 ▸ | D | 1910 | Z19DTH | A | | | 2005 ▸ | 12765753 | **818818** | 648 414,5 | ALM |
| 1.9 TiD 16V | D | 1910 | Z19DTH | A | | | 01/08 ▸ | 12773072 | **•818840** | | |
| 1.9 TiD,1.9 TiD 16V ▸ 51048287 | D | 1910 | Z19DT,Z19DTH | M | | | 06/04 ▸ 2005 | 12804713 | **•818817** | | |
| 1.9 TiD 16V ▸ 51048287 | D | 1910 | Z19DTH | A | | | 06/04 ▸ 2005 | 12804713 | **•818817** | | |
| 2.2 TiD 16V FB/45D/46D ; FD/45D 46D | D | 2171 | D223L-125 | M | | | 09/02 ▸ | 12788019 | **817729** | 647 400 | ALB |
| **9-5 (97>2001)** | | | | | | | | | | |
| 2.0 i Turbo 16V 640 | E | 1985 | B205E,B205R | M | | | 09/97 ▸ 08/01 | 4576039 | **817275** | 581 376 | ALB |
| 2.0 i Turbo 16V 640 | E | 1985 | B205E,B205R | A | | | 09/97 ▸ 08/01 | 4576039 | **817275** | 581 376 | ALB |
| 2.3 i Turbo 16V 640 ; EH45G | E | 2290 | B235E,B235R | M | | | 09/97 ▸ 08/01 | 4576039 | **817275** | 581 376 | ALB |
| 2.3 i Turbo 16V 640 | E | 2290 | B235E,B235R | A | | | 09/97 ▸ 08/01 | 4576039 | **817275** | 581 376 | ALB |
| 3.0 i V6 Turbo 24V 640 | E | 2962 | B308E | A | | | 01/98 ▸ 08/01 | 4726568 | **•817276** | 581 365 | ALB |
| **9-5 (2001>2005)** | | | | | | | | | | |
| 2.0 i Turbo 16V | E | 1985 | B205E-D4,B205E-E2 | M | | | 09/01 ▸ 01/05 | 4576039 | **817275** | 581 376 | ALB |
| 2.0 i Turbo 16V | E | 1985 | B205E-D4,B205E-E2 | A | | | 09/01 ▸ 01/05 | 4576039 | **817275** | 581 376 | ALB |
| 2.3 T Turbo 16V,2.3 i Turbo 16V | E | 2290 | B235E,B235L-D4,B235L-E2 B235R-D4,B235R-E2 | M | | | 09/01 ▸ 11/05 | 4576039 | **817275** | 581 376 | ALB |
| 2.3 T Turbo 16V,2.3 i Turbo 16V | E | 2290 | B235E,B235L-D4,B235L-E2 B235R-D4,B235R-E2 | A | | | 09/01 ▸ 11/05 | 4576039 | **817275** | 581 376 | ALB |
| 3.0 i V6 Turbo 24V | E | 2962 | B308E | A | | | 09/01 ▸ 08/03 | 4726568 | **•817276** | 581 365 | ALB |
| 2.2 TiD | D | 2171 | D223L | M | | | 02/02 ▸ 01/05 | 4726568 | **•817276** | 581 365 | ALB |
| 2.2 TiD | D | 2171 | D223L | A | | | 02/02 ▸ 01/05 | 4726568 | **•817276** | 581 365 | ALB |
| 3.0 TiD V6 | D | 2962 | D308L | M | | | 09/01 ▸ 01/05 | 4726568 | **•817276** | 581 365 | ALB |
| **9-5 (2005>2010)** | | | | | | | | | | |
| 2.0 i Turbo 16V | E | 1985 | B205E-E4 | M | | | 02/06 ▸ 02/07 | 4576039 | **817275** | 581 376 | ALB |
| 2.0 i Turbo 16V | E | 1985 | B205E-E4 | A | | | 02/06 ▸ 02/07 | 4576039 | **817275** | 581 376 | ALB |
| 2.3 i Turbo 16V | E | 2290 | B235E,B235R | M | | | 11/05 ▸ 07/09 | 4576039 | **817275** | 581 376 | ALB |
| 2.3 i Turbo 16V | E | 2290 | B235E,B235R | A | | | 11/05 ▸ 07/09 | 4576039 | **817275** | 581 376 | ALB |
| 1.9 TiD Turbo 16V | D | 1910 | Z19DTH | M | | | 11/05 ▸ 07/09 | 4726568 | **•817276** | 581 365 | ALB |

Charge Air Cooler Refroidisseur d'air de suralimentation Ladeluftkühler Intercooler Intercooler Turbo Radyatörü
Intercooler Охладитель всасываемого воздуха töltőlevegő hűtő Intercooler Intercooler Intercooler



• **New** Nouveau **Nuevo** Novo **Nuovo** Nieuw **Neu** Nowość **Yeni** Новый Νέο **Nový**

| | Type Ctr. | | CC | | | AC | | | OE | Valeo | DIM. | | TECH |
|---|---|---|---|---|---|---|---|---|---|---|---|---|---|
| **SAAB (.../...)** | | | | | | | | | | | | | |
| **9-5 (2005>2010) (.../...)** | | | | | | | | | | | | | |
| 1.9 TiD Turbo 16V | | D | 1910 | Z19DTH | A | | | 11/05 ▸ 07/09 | 4726568 | •817276 | 581 | 365 | ALB |
| **SEAT** | | | | | | | | | | | | | |
| **ALHAMBRA** | | | | | | | | | | | | | |
| 1.8 i 20V | 7V8/3J5/9J5 | E | 1781 | AJH | M | | C | 10/98 ▸ 05/00 | 7M0145805 | 817936 | 500 | 67 | ALB |
| 1.8 i Turbo 20V | 7V9/3B3/5B3/9B3 | E | 1781 | AWC | M | | C | 06/00 ▸ 05/03 | 7M3145805 | | 570 | 96 | ALB |
| 1.8 i 20V | 7V8/3J5/3J8 | E | 1781 | AJH | A | | C | 05/98 ▸ 05/00 | 7M0145805 | 817936 | 500 | 67 | ALB |
| 1.8 i Turbo 20V | 7V9/3B9/5B9/9B9 | E | 1781 | AWC | A | | | 06/00 ▸ 05/03 | 7M3145805 | | 570 | 96 | ALB |
| 1.9 TDi | 7V8/385/3X5/985/9X5 | D | 1896 | 1Z,AFN,AHU | M | | C | 03/96 ▸ 05/00 | 7M0145805 | 817936 | 500 | 67 | ALB |
| 1.9 TDi | 7V9/2U3/3T3/3T7/3U3 5T3/5T7/9T3/9T7/9U3 | D | 1896 | ANU,AUY | M | | C | 06/00 ▸ 05/03 | 7M3145805 | | 570 | 96 | ALB |
| 1.9 TDi | 7V8/388/988 | D | 1896 | AFN | A | | C | 09/97 ▸ 05/00 | 7M0145805 | 817936 | 500 | 67 | ALB |
| 1.9 TDi | 7V9/3T7/3T9/5T9/9T7 9T9 | D | 1896 | AUY | A | | C | 06/00 ▸ 05/03 | 7M3145805 | | 570 | 96 | ALB |
| **ALHAMBRA II (2003>2010)** | | | | | | | | | | | | | |
| 1.8 i Turbo 20V | 7V9/3B3/5B3/9B3 | E | 1781 | AWC | M | | | 06/03 ▸ 03/10 | 7M3145805 | | 570 | 96 | ALB |
| 1.8 i Turbo 20V | 7V9/3B9/5B9/9B9 | E | 1781 | AWC | A | | | 06/03 ▸ 03/10 | 7M3145805 | | 570 | 96 | ALB |
| 1.9 TDi | 7V9/3T3/3T7/3U3/5T3 5T7/9T3/9T7/9U3 | D | 1896 | ANU,AUY | M | | | 06/03 ▸ 03/10 | 7M3145805 | | 570 | 96 | ALB |
| 1.9 TDi | 7V9/3T9/5T9/9T9 | D | 1896 | AUY | A | | | 06/03 ▸ 03/10 | 7M3145805 | | 570 | 96 | ALB |
| **ALTEA (2004>2009)** | | | | | | | | | | | | | |
| 1.4 TSi 125 16V | 5P1/2H1 ; 5P5/1H1 2H1 | E | 1390 | CAXC | M | | | 11/07 ▸ 03/09 | 03C145749B | 818838 | 179 | 116 | ALB |
| 1.8 TFSi 160 16V | 5P5/151/251 | E | 1798 | BYT | M | | | 01/07 ▸ 06/07 | 1K0145803A | 818795 | 617 | 406 | ALB |
| 2.0 TFSi 200 16V | 5P15P1 ; 5P52P1 | E | 1984 | BWA | M | | | 05/06 ▸ 03/09 | 1K0145803A | 818795 | 617 | 406 | ALB |
| 2.0 TFSi 200 16V | 5P15P3 ; 5P52P3 | E | 1984 | BWA | A | | | 05/06 ▸ 03/09 | 1K0145803A | 818795 | 617 | 406 | ALB |
| 1.9 TDi 105 | 5P1/112/121/212 5P5/112/212 | D | 1896 | BJB,BKC,BXE | M | | | 04/04 ▸ 03/09 | 1K0145803A | 818795 | 617 | 406 | ALB |
| 1.9 TDi 105 | 5P1/122/222 ; 5P5 122/222 | D | 1896 | BLS | M | | | 10/05 ▸ 03/09 | 1K0145803F | 818213 | 617 | 407 | ALB |
| 2.0 TDi 136 16V<br>2.0 TDi 140 16V | 5P1/131/231/241<br>5P5/231/241 | D | 1968 | AZV,BKD | M | | | 03/04 ▸ 03/09 | 1K0145803A | 818795 | 617 | 406 | ALB |
| 2.0 TDi PD 170 16V | 5P1/261/561 | D | 1968 | BMN | M | | | 01/06 ▸ 03/09 | 1K0145803B | 818795 | 617 | 406 | ALB |
| 2.0 TDi 136 16V<br>2.0 TDi 140 16V | 5P1/133/233/243<br>5P5/233/243 | D | 1968 | AZV,BKD | A | | | 06/04 ▸ 03/09 | 1K0145803A | 818795 | 617 | 406 | ALB |
| **AROSA** | | | | | | | | | | | | | |
| 1.4 TDi | 6H1/094/194/294 | D | 1422 | AMF | M | | | 10/99 ▸ 06/04 | 6E0145805B | 817486 | 220 | 133,4 | ALB |
| **CORDOBA (96>99)** | | | | | | | | | | | | | |
| 1.9 TDi | 6K2/2N2/3N2/581/5N2 881/8N2 ; 6K5/2N2/3N2/581 | D | 1896 | 1Z,AFN,AHU | M | | C | 07/96 ▸ 05/99 | 6K0145805 | 817766 | 295 | 94,6 | ALB |
| **CORDOBA (99>2002)** | | | | | | | | | | | | | |
| 1.8 i Turbo 20V | 6K2/6J6/9J6 | E | 1781 | AQX,AYP | M | | C | 12/99 ▸ 08/02 | 6K0145805F | 817767 | 295 | 95 | ALB |
| 1.8 i Turbo 20V | 6K2/6J6/9J6 | E | 1781 | AQX | M | | C | 12/99 ▸ 08/02 | 6K0145805E | 817767 | 295 | 95 | ALB |
| 1.9 TDi | 6K2/2L6/2N6/3L6/3N6 3X6/5L6/5N6/5X6/8L6/8N6/9X6 ; 6K5/2L6/2N6 3L6/3N6/3X6/5L6/5N6/5X6 | D | 1896 | AGR,ALH,ASV | M | | | 03/99 ▸ 08/02 | 6K0145805C | 817767 | 295 | 95 | ALB |
| 1.9 TDi | 6K2/2L6/2N6/3L6/3N6 5L6/5N6/8L6/8N6 ; 6K5/2L6/2N6/3L6/3N6/3X6 5L6/5N6/5X6 | D | 1896 | AGR,ALH,ASV | M | | C | 05/99 ▸ 08/02 | 6K0145805E | 817767 | 295 | 95 | ALB |
| **CORDOBA (2002>)** | | | | | | | | | | | | | |
| 1.4 TDi | 6L2/204/254/264/304 354/364/504/554/564 | D | 1422 | AMF,BNM,BNV | M | | | 10/02 ▸ 11/09 | 6Q0145804A | 817556 | 183 | 189 | ALB |
| 1.4 TDi | 6L2/274/374/574 | D | 1422 | BMS | M | | | 06/06 ▸ 11/09 | 6Q0145804G | 818829 | 183 | 189,7 | ALB |
| 1.9 TDi | 6L2/224/324/524 | D | 1896 | ATD,AXR | M | | | 09/02 ▸ 06/06 | 6Q0145804A | 817556 | 183 | 189 | ALB |
| 1.9 TDi | 6L2/336/536 | D | 1896 | ASZ,BLT | M | | | 10/02 ▸ 05/06 | 6Q0145804E | 817558 | 183 | 189,7 | ALB |
| **IBIZA (93>99)** | | | | | | | | | | | | | |
| 1.9 TDi | 6K1/2N2/3N2/581/5N2 | D | 1896 | 1Z,AFN,AHU | M | | C | 07/96 ▸ 06/99 | 6K0145805 | 817766 | 295 | 94,6 | ALB |
| **IBIZA (99>2001)** | | | | | | | | | | | | | |
| 1.8 i Turbo 20V | 6K1/5J6/6J6 | E | 1781 | AQX,AYP | M | | C | 12/99 ▸ 11/01 | 6K0145805F | 817767 | 295 | 95 | ALB |

| Type Ctr. | | CC | | AC | | | OE | Valeo | DIM. | TECH |
|---|---|---|---|---|---|---|---|---|---|---|
| **SEAT** (.../...) | | | | | | | | | | |
| **IBIZA (99>2001) (.../...)** | | | | | | | | | | |
| 1.8 i Turbo 20V 6K1/5J6/6J6 | E | 1781 | AQX,AYP | M | | | 12/99 ▸ 11/01 | 6K0145805C | **817767** | 295 95 ALB |
| 1.8 i Turbo 20V 6K1/5J6/6J6 | E | 1781 | AQX,AYP | M | | C | 12/99 ▸ | 6K0145805E | **817767** | 295 95 ALB |
| 1.9 TDi 6K1/2L6/2N6/3L6/3N6 3X6/5L6/5N6/5X6 | D | 1896 | AGR,ALH,ASV | M | | | 03/99 ▸ 11/01 | 6K0145805C | **817767** | 295 95 ALB |
| 1.9 TDi 6K1/2L6/2N6/3L6/3N6 3X6/5L6/5N6/5X6 | D | 1896 | AGR,ALH,ASV | M | | C | 05/99 ▸ 11/01 | 6K0145805F | **817767** | 295 95 ALB |
| **IBIZA (2001>)** | | | | | | | | | | |
| 1.8 i Turbo 20V 6L17J4 | E | 1781 | BJX,BKV | M | | | 12/03 ▸ 05/08 | 6Q0145804A | **817556** | 183 189 ALB |
| 1.4 TDi 6L1/204/254/264/304 354/364/504/554/564 | D | 1422 | AMF,BNM,BNV | M | | | 05/02 ▸ 11/09 | 6Q0145804A | **817556** | 183 189 ALB |
| 1.4 TDi 6L1/274/374/574 | D | 1422 | BMS | M | | | 06/06 ▸ 11/09 | 6Q0145804G | **818829** | 183 189,7 ALB |
| 1.9 TDi 6L1/224/324/524 | D | 1896 | ATD | M | | | 09/01 ▸ 05/05 | 6Q0145804A | **817556** | 183 189 ALB |
| 1.9 TDi 6L1/336/536/736 | D | 1896 | ASZ,BLT | M | | | 11/01 ▸ 11/09 | 6Q0145804E | **817558** | 183 189,7 ALB |
| 1.9 TDi 6L1/336/536 | D | 1896 | ASZ | M | | | 11/01 ▸ 04/04 | 6Q0145804B | **817558** | 183 189,7 ALB |
| 1.9 TDi 6L1/284/384/584 | D | 1896 | BMT | M | | | 09/06 ▸ 11/09 | 6Q0145804G | **818829** | 183 189,7 ALB |
| **LEON I (99>2006)** | | | | | | | | | | |
| 1.8 i Turbo 20V 1M1/536/559/599/636 736/759 | E | 1781 | AJQ,APP,ARY,AUQ | M | | | 08/99 ▸ 10/05 | 1J0145803G | | 183,4 189,8 ALB |
| 1.8 i Turbo 20V 1M1/736/759 1M-3-104 530, 1M-3-104 531 ▸ | E | 1781 | ARY,AUQ | M | | | 05/02 ▸ 10/05 | 1J0145803T | **817457** | 183 189,7 ALB |
| 1.8 i Turbo 20V 1M1/516/586 | E | 1781 | AMK,BAM | M | | | 05/02 ▸ 05/06 | 8L9145805H | **817488** | 183 137,2 ALB |
| 1.8 i Turbo 20V 1M1/516/586 | E | 1781 | AMK,BAM | M | | Right/Droite | 05/02 ▸ 05/06 | 8L9145806B | **817487** | 183 174 ALB |
| 1.9 TDi 1M1/324/344/374/3B4 524/566/567/574/666/667/766/767/824/844/874 8B4 | D | 1896 | AGR,AHF,ALH,ARL,ASV | M | | | 10/99 ▸ 05/06 | 1J0145803G | | 183,4 189,8 ALB |
| 1.9 TDi 1M1/566/567/666/667 766/767 | D | 1896 | ARL | M | | | 09/00 ▸ | 1J0145805H | | 183,4 189,8 ALB |
| 1.9 TDi 1M1/324/374/3B4/524 574/824/844/874/8B4 1M-3-104 530, 1M-3-104 531 ▸ | D | 1896 | AGR,AHF,ALH,ASV | M | | | 02/03 ▸ | 1J0145803T | **817457** | 183 189,7 ALB |
| 1.9 TDi 1M13V4 | D | 1896 | AXR | M | | | 10/05 ▸ 05/06 | 1J0145803N | •**817557** | 189 183,4 ALB |
| **LEON II (2005>2010)** | | | | | | | | | | |
| 2.0 TFSi 16V,2.0 TFSi 185 16V 1P1/2B1/2P1/591/5P1 2.0 TFSi 200 16V 2.0 TFSi 241 16V | E | 1984 | BWA,BWJ | M | | | 11/05 ▸ | 1K0145803A | **818795** | 617 406 ALB |
| 2.0 TFSi 200 16V 1P15P3 | E | 1984 | BWA | A | | | 11/05 ▸ 03/09 | 1K0145803A | **818795** | 617 406 ALB |
| 1.9 TDi 105 1P1/112/212 | D | 1896 | BKC,BXE | M | | | 07/05 ▸ 05/10 | 1K0145803A | **818795** | 617 406 ALB |
| 1.9 TDi 105 1P1/122/222 | D | 1896 | BLS | M | | | 11/05 ▸ 05/06 | 1K0145803F | **818213** | 617 407 ALB |
| 2.0 TDi 136 16V 1P1/131/231/241 2.0 TDi 140 16V | D | 1968 | AZV,BKD | M | | | 07/05 ▸ 05/10 | 1K0145803A | **818795** | 617 406 ALB |
| 2.0 TDi 170 16V 1P1561 | D | 1968 | BMN | M | | | 02/06 ▸ 03/09 | 1K0145803B | **818795** | 617 406 ALB |
| 2.0 TDi 136 16V 1P1/133/233/243 2.0 TDi 140 16V | D | 1968 | AZV,BKD | A | | | 07/05 ▸ 05/10 | 1K0145803A | **818795** | 617 406 ALB |
| **TOLEDO (98>2004)** | | | | | | | | | | |
| 1.8 i 20V 1M2/536/836 | E | 1781 | AUQ | M | | | 05/01 ▸ 07/04 | 1J0145803G | | 183,4 189,8 ALB |
| 1.9 TDi 1M2/224/244/274/2B4 324/344/374/3B4/524/574/824/844/846/874/8B4 | D | 1896 | AGR,AHF,ALH,ASV,ASZ | M | | Left/gauche | 10/98 ▸ 07/04 | 1J0145803G | | 183,4 189,8 ALB |
| 1.9 TDi 1M2/566/666/866 | D | 1896 | ARL | M | | | 10/00 ▸ | 1J0145805H | | 183,4 189,8 ALB |
| **TOLEDO (2004>)** | | | | | | | | | | |
| 1.4 FSi 5P2/1H1/2H1 | E | 1390 | CAXC | M | | | 11/07 ▸ | 03C145749B | **818838** | 179 116 ALB |
| 1.8 FSi 16V 5P2/151/251 | E | 1798 | BYT,BZB | M | | | 11/05 ▸ | 1K0145803A | **818795** | 617 406 ALB |
| 2.0 TFSi 16V 5P22P1 | E | 1984 | BWA | M | | | 05/06 ▸ | 1K0145803A | **818795** | 617 406 ALB |
| 2.0 TFSi 16V 5P22P3 | E | 1984 | BWA | A | | | 05/06 ▸ | 1K0145803A | **818795** | 617 406 ALB |
| 1.9 TDi 5P2/012/112/212 | D | 1896 | BJB,BKC,BXE | M | | | 09/04 ▸ | 1K0145803A | **818795** | 617 406 ALB |
| 1.9 TDi 5P2/022/122/222 | D | 1896 | BLS | M | | | 10/05 ▸ | 1K0145803F | **818213** | 617 407 ALB |
| 1.9 TDi 5P2/023/123/223 | D | 1896 | BLS | A | | | 06/07 ▸ | 1K0145803F | **818213** | 617 407 ALB |
| 2.0 TDi 16V 5P2/031/131/141/231 241 | D | 1968 | AZV,BKD | M | | | 09/04 ▸ | 1K0145803A | **818795** | 617 406 ALB |
| 2.0 TDi PD 16V 5P2/261/271 | D | 1968 | BMN | M | | | 01/06 ▸ | 1K0145803B | **818795** | 617 406 ALB |
| 2.0 TDi 16V 5P2/033/133/233/243 | D | 1968 | AZV,BKD | A | | | 09/04 ▸ | 1K0145803A | **818795** | 617 406 ALB |

Charge Air Cooler Refroidisseur d'air de suralimentation Ladeluftkühler Intercooler Intercooler Turbo Radyatörü
Intercooler Охладитель всасываемого воздуха töltőlevegő hűtő Intercooler Intercooler Intercooler



• **New** Nouveau **Nuevo** Novo **Nuovo** Nieuw **Neu** Nowość **Yeni** Новый Νέο **Novy**

| Type Ctr. | | CC | | AC | | | OE | Valeo | DIM. | TECH |
|---|---|---|---|---|---|---|---|---|---|---|
| **SEAT (.../...)** | | | | | | | | | | |
| **TOLEDO (2004>) (.../...)** | | | | | | | | | | |
| 2.0 TDi 16V,2.0 TDi PD 16V 5P2/073/173/273 | D | 1968 | BMN | A | | | 01/06 ▸ | 1K0145803B | **818795** | 617 406 | ALB |
| **SKODA** | | | | | | | | | | |
| **FABIA (99>2004)** | | | | | | | | | | |
| 1.4 TDi 6Y2/144/244/344 6Y3/144/244/344 ; 6Y5/144/244/344 | D | 1422 | AMF | M | | | 04/03 ▸ 07/04 | 6Q0145804A | **817556** | 183 189 | ALB |
| 1.9 TDi 6Y2585 | D | 1896 | ASZ | M | | | 06/03 ▸ 07/04 | 6Q0145804E | **817558** | 183 189,7 | ALB |
| 1.9 TDi 6Y2/164/264/364 6Y3/164/264/364 ; 6Y5/164/264/364 6Y-4-115 001 ▸ | D | 1896 | ATD | M | | | 08/03 ▸ | 6Q0145804A | **817556** | 183 189 | ALB |
| 1.9 TDi 6Y2/164/264/364 6Y3/164/264/364 ; 6Y5/164/264/364 | D | 1896 | ATD | M | | | 01/00 ▸ 11/02 | 6Q0145804 | | 183,4 185,4 | ALB |
| **FABIA (FL) (2004>2007)** | | | | | | | | | | |
| 1.4 TDi 6Y2/114/134/144/214 234/244/314/334/344 ; 6Y3/114/124/134/144 1G4/214/234/244/2G4/2GA/314/334/344/3G4 6Y5/114/134/144/1G4/214/234/244/2G4/314/334 344/3G4/P14 | D | 1422 | AMF,BNM,BNV | M | | | 08/04 ▸ 12/07 | 6Q0145804A | **817556** | 183 189 | ALB |
| 1.9 TDi 6Y2585 | D | 1896 | ASZ,BLT | M | | | 08/04 ▸ 04/07 | 6Q0145804E | **817558** | 183 189,7 | ALB |
| 1.9 TDi 6Y2/164/264/364 6Y3/164/264/364 ; 6Y5/164/264/364 | D | 1896 | ATD,AXR | M | | | 08/04 ▸ 12/07 | 6Q0145804A | **817556** | 183 189 | ALB |
| **FABIA II (2007>)** | | | | | | | | | | |
| 1.4 TDI 542/144/244/344/444 545/144/244/344/444 | D | 1422 | BMS/F | M | | | 01/07 ▸ | 6Q0145804G | **818829** | 183 189,7 | ALB |
| 1.4 TDI 542/114/134/214/234 314/334/414/434 ; 545/114/134/214/234/314 334/414/434 | D | 1422 | BNM,BNV | M | | | 01/07 ▸ | 6Q0145804A | **817556** | 183 189 | ALB |
| 1.9 TDI 542/164/264/364/464 545/164/264/364/464 | D | 1896 | BSW | M | | | 04/07 ▸ | 6Q0145804A | **817556** | 183 189 | ALB |
| 1.9 TDI 542/174/274/374/474 545/274/474 | D | 1896 | BLS | M | | | 04/07 ▸ | 6Q0145804G | **818829** | 183 189,7 | ALB |
| **OCTAVIA (96>2000)** | | | | | | | | | | |
| 1.8 i 20V,1.8 i Turbo 20V 1U2/4Q4/4S4 ; 1U5 3Q4/4Q4/4S4 | E | 1781 | AGU,ARZ | M | | | 05/98 ▸ 07/00 | 1J0145803G | | 183,4 189,8 | ALB |
| 1.8 i 20V 1U24Q4 | E | 1781 | AGU | M | | | 01/99 ▸ 04/99 | 1J0145805H | | 183,4 189,8 | ALB |
| 1.8 i Turbo 20V 1U5/3Q3/4Q3 | E | 1781 | AGU | A | | | 08/98 ▸ 07/00 | 1J0145803G | | 183,4 189,8 | ALB |
| 1.9 TDi 1U2/274/374/384/484 | D | 1896 | AGR,AHF | M | | | 10/96 ▸ 07/00 | 1J0145805H | | 183,4 189,8 | ALB |
| 1.9 TDi 1U2/274/374/384 | D | 1896 | AGR,AHF | M | | | 10/96 ▸ 07/00 | 1J0145805B | | 183,4 189,8 | ALB |
| 1.9 TDi 1U2/274/374/384/394 484/494 ; 1U5/274/27X/374/37X/384/484/494 774 | D | 1896 | AGR,AHF,ASV | M | | | 10/96 ▸ | 1J0145803G | | 183,4 189,8 | ALB |
| 1.9 TDi 1U2383 | D | 1896 | AHF | A | | | 08/97 ▸ 07/00 | 1J0145803G | | 183,4 189,8 | ALB |
| 1.9 TDi 1U2383 | D | 1896 | AHF | A | | | 08/97 ▸ 04/99 | 1J0145805H | | 183,4 189,8 | ALB |
| **OCTAVIA (2000>2004)** | | | | | | | | | | |
| 1.8 i Turbo 20V 1U2/3Q4/3QX/4Q4/4QX 5R4 ; 1U5/3Q4/3QX/4Q4/4QX | E | 1781 | AGU,ARX,AUM,AUQ | M | | | 08/00 ▸ 02/03 | 1J0145803F | **817457** | 183 189,7 | ALB |
| 1.8 20V,1.8 i Turbo 20V 1U2/1Q4/1QX/2Q4/2QX 3Q4/3QX/4Q4/4QX/5Q4/5R4/PQ4 ; 1U5/1Q4/1QX 2Q4/2QX/3Q4/3QX/4Q4/4QX/5R4 | E | 1781 | AGU,ARX,ARZ,AUM,AUQ | M | | | 08/00 ▸ 12/10 | 1J0145803T | **817457** | 183 189,7 | ALB |
| 1.8 20V,1.8 i Turbo 20V 1U2/2Q4/2QX/3Q4/3QX 4Q4/4QX/5Q4/5R4/PQ4 ; 1U5/1Q4/2Q4/2QX/3Q4 3QX/4Q4/4QX/5R4 | E | 1781 | AGU,ARX,AUM,AUQ | M | | | 08/00 ▸ 02/03 | 1J0145803G | | 183,4 189,8 | ALB |
| 1.8 i Turbo 20V 1U2/3Q3/4Q3 ; 1U5 3Q3/4Q3 | E | 1781 | AGU,ARX | A | | | 08/00 ▸ 02/03 | 1J0145803F | **817457** | 183 189,7 | ALB |
| 1.8 i Turbo 20V 1U2/2Q3/3Q3/4Q3 1U5/2Q3/3Q3/4Q3 | E | 1781 | AGU,ARX,AUM | A | | | 08/00 ▸ 02/03 | 1J0145803G | | 183,4 189,8 | ALB |
| 1.8 i Turbo 20V 1U2/1Q3/2Q3/3Q3/4Q3 1U5/1Q3/2Q3/3Q3/4Q3 | E | 1781 | AGU,ARX,AUM | A | | | 02/03 ▸ 01/06 | 1J0145803T | **817457** | 183 189,7 | ALB |
| 1.9 TDi 1U2/174/274/284/374 384/484/P84 ; 1U5/174/25Y/274/27X/284/35Y 374/37X/384/394/484 | D | 1896 | AGR,AHF,ALH,ASV,ATD | M | | | 08/00 ▸ 02/03 | 1J0145803F | **817457** | 183 189,7 | ALB |

# SKODA (.../...)

## OCTAVIA (2000>2004) (.../...)

| Type Ctr. | | CC | | | AC | | | OE | Valeo | DIM. | TECH |
|---|---|---|---|---|---|---|---|---|---|---|---|
| 1.9 TDi | 1U2/174/184/274/284<br>374/384/474/484/P84 ; 1U5/15Y/174/184/25Y<br>274/27X/284/35Y/374/37X/384/394/484 | D | 1896 | AGR,AHF,ALH,ASV,ATD | M | | | 08/00 ▸ 01/06 | 1J0145803T | **817457** | 183 189,7 | ALB |
| 1.9 TDi | 1U2/174/274/284/374<br>384/474/484/P84 ; 1U5/15Y/174/184/25Y/274<br>27X/284/35Y/374/37X/384/394/484 | D | 1896 | AGR,AHF,ALH,ASV,ATD | M | | | 08/00 ▸ 02/03 | 1J0145803G | | 183,4 189,8 | ALB |
| 1.9 TDi | 1U2/295/395/495<br>1U5/295/395/495 | D | 1896 | ASZ | M | | | 09/02 ▸ 09/04 | 1J0145803M | **817653** | 183 189,8 | ALB |
| 1.9 TDi | 1U2154 ; 1U5154 | D | 1896 | AXR | M | | | 10/05 ▸ 12/10 | 1J0145803N | •**817557** | 189 183,4 | ALB |
| 1.9 TDi | 1U2/173/273/373/473<br>1U5/173/273/373 | D | 1896 | ALH | A | | | 08/00 ▸ 02/03 | 1J0145803G | | 183,4 189,8 | ALB |
| 1.9 TDi | 1U2/273/373 ; 1U5<br>273/373 | D | 1896 | ALH | A | | | 08/00 ▸ 02/03 | 1J0145803F | **817457** | 183 189,7 | ALB |
| 1.9 TDi | 1U2/173/273/373/473<br>1U5/173/273/373 | D | 1896 | ALH | A | | | 02/03 ▸ 12/07 | 1J0145803T | **817457** | 183 189,7 | ALB |

## OCTAVIA (2004>2008)

| | | | | | | | | | | | | |
|---|---|---|---|---|---|---|---|---|---|---|---|---|
| 1.8 TFSi 16V | 1Z3/2Q5/3Q5/4Q5<br>1Z5/2Q5/3Q5/4Q5 | E | 1798 | BZB | M | | | 06/07 ▸ 10/08 | 1K0145803T | **818898** | 617 407 | ALB |
| 1.8 TFSi 16V | 1Z3/2Q5/3Q5/4Q5<br>1Z5/2Q5/3Q5/4Q5 | E | 1798 | BZB | M | | | 06/07 ▸ 10/08 | 1K0145803S | **818795** | 617 406 | ALB |
| 2.0 TFSi 16V | 1Z35R5 ; 1Z55R5 | E | 1984 | BWA | M | | | 10/05 ▸ 10/08 | 1K0145803T | **818898** | 617 407 | ALB |
| 2.0 TFSi 16V | 1Z35R5 ; 1Z55R5 | E | 1984 | BWA | M | | | 10/05 ▸ | 1K0145803A | **818795** | 617 406 | ALB |
| 2.0 TFSi 16V<br>▸ 1Z-7A154 476 | 1Z35R5 ; 1Z55R5 | E | 1984 | BWA | M | | | 10/05 ▸ | 1K0145803S | **818795** | 617 406 | ALB |
| 1.9 TDi | 1Z3/164/264/364<br>1Z5/164/264/364/A6Y/B6Y | D | 1896 | BJB,BKC,BXE | M | | | 05/04 ▸ | 1K0145803S | **818795** | 617 406 | ALB |
| 1.9 TDi | 1Z3/164/264/364<br>1Z5/164/264/364/A6Y/B6Y | D | 1896 | BJB,BKC,BXE | M | | | 05/04 ▸ 10/08 | 1K0145803T | **818898** | 617 407 | ALB |
| 1.9 TDi<br>1Z-7A154 477 ▸ | 1Z3/154/254/354<br>1Z5/154/254/354/A5Y/B5Y | D | 1896 | BLS | M | | | 05/06 ▸ 10/08 | 1K0145803Q | **818213** | 617 407 | ALB |
| 1.9 TDi | 1Z3/16C/26C/36C<br>1Z5/16C/26C/36C | D | 1896 | BKC,BXE | A | | | 08/04 ▸ 10/08 | 1K0145803T | **818898** | 617 407 | ALB |
| 1.9 TDi | 1Z3/16C/26C/36C<br>1Z5/16C/26C/36C | D | 1896 | BKC | A | | | 08/04 ▸ 11/04 | 1K0145803A | **818795** | 617 406 | ALB |
| 1.9 TDi | 1Z3/15C/25C/35C<br>1Z5/15C/25C/35C | D | 1896 | BLS | A | | | 05/06 ▸ 10/08 | 1K0145803Q | **818213** | 617 407 | ALB |
| 1.9 TDi<br>▸ 1Z-52032 286 | 1Z3/164/264/364<br>1Z5/164/264/364 | D | 1896 | BJB,BKC | M | | | 05/04 ▸ 11/04 | 1K0145803A | **818795** | 617 406 | ALB |
| 1.9 TDi<br>▸ 1Z-52032 286 | 1Z3/16C/26C/36C<br>1Z5/16C/26C/36C | D | 1896 | BKC,BXE | A | | | 08/04 ▸ | 1K0145803S | **818795** | 617 406 | ALB |
| 1.9 TDi<br>▸ 1Z-7A154 476 | 1Z3/154/254/354<br>1Z5/154/254/354/A5Y/B5Y | D | 1896 | BLS | M | | | 05/06 ▸ 09/07 | 1K0145803F | **818213** | 617 407 | ALB |
| 1.9 TDi<br>▸ 1Z-7A154 476 | 1Z3/15C/25C/35C<br>1Z5/15C/25C/35C | D | 1896 | BLS | A | | | 05/06 ▸ 09/07 | 1K0145803F | **818213** | 617 407 | ALB |
| 2.0 TDi 16V<br>1Z-7A154 477 ▸ | 1Z3/275/285/375/385<br>47C/485 ; 1Z5/275/285/375/385/475/485 | D | 1968 | AZV,BKD | M | | | | 1K0145803S | **818795** | 617 406 | ALB |
| 2.0 TDi 16V | 1Z3/275/285/375/385<br>47C/485 ; 1Z5/275/285/375/385/475/485 | D | 1968 | AZV,BKD | M | | | 05/04 ▸ 02/07 | 1K0145803A | **818795** | 617 406 | ALB |
| 2.0 TDi 16V | 1Z3/275/285/375/385<br>485/595 ; 1Z5/285/375/385/475/485/595 | D | 1968 | AZV,BKD,BMN | M | | | 05/04 ▸ 10/08 | 1K0145803T | **818898** | 617 407 | ALB |
| 2.0 TDi 16V<br>1Z-7A154 477 ▸ | 1Z3/27C/28C/37C/38C<br>475/48C ; 1Z5/27C/28C/37C/38C/47C/48C | D | 1968 | AZV,BKD | A | | | | 1K0145803S | **818795** | 617 406 | ALB |
| 2.0 TDi 16V | 1Z3/27C/28C/37C/38C<br>475/48C ; 1Z5/27C/28C/37C/38C/47C/48C | D | 1968 | AZV,BKD | A | | | 05/04 ▸ 10/08 | 1K0145803T | **818898** | 617 407 | ALB |
| 2.0 TDi 16V<br>▸ 1Z-7A154 476 | 1Z3595 ; 1Z5595 | D | 1968 | BMN | M | | | 04/06 ▸ | 1K0145803B | **818795** | 617 406 | ALB |
| 2.0 TDi 16V | 1Z3/27C/28C/37C/38C<br>475/48C ; 1Z5/27C/28C/37C/38C/47C/48C | D | 1968 | AZV,BKD | A | | | 05/04 ▸ 02/07 | 1K0145803A | **818795** | 617 406 | ALB |

## ROOMSTER (2006>2010)

| | | | | | | | | | | | | |
|---|---|---|---|---|---|---|---|---|---|---|---|---|
| 1.4 TDi | 5J7/114/134/214/234<br>314/334/414/434/P14/S34 | D | 1422 | BNM,BNV | M | | | 05/06 ▸ 03/10 | 6Q0145804A | **817556** | 183 189 | ALB |

Charge Air Cooler Refroidisseur d'air de suralimentation Ladeluftkühler Intercooler Intercooler Turbo Radyatörü
Intercooler Охладитель всасываемого воздуха töltőlevegő hűtő Intercooler Intercooler Intercooler



• **New** Nouveau **Nuevo** Novo **Nuovo** Nieuw **Neu** Nowość **Yeni** Новый Νέο **Novy**

| Type Ctr. | | CC | | AC | | | OE | Valeo | DIM. | TECH |
|---|---|---|---|---|---|---|---|---|---|---|
| **SKODA (.../...)** | | | | | | | | | | |
| **ROOMSTER (2006>2010) (.../...)** | | | | | | | | | | |
| 1.4 TDi 5J7/144/244/344/444 S44 | D | 1422 | BMS/F | M | | | 07/06 ▸ 03/10 | 6Q0145804G | **818829** | 183 189,7 | ALB |
| 1.9 TDi 5J7/164/264/364/464 S64 | D | 1896 | AXR,BSW | M | | | 03/06 ▸ 03/10 | 6Q0145804A | **817556** | 183 189 | ALB |
| 1.9 TDi 5J7/174/274/374/474 S74 | D | 1896 | BLS | M | | | 11/06 ▸ 03/10 | 6Q0145804G | **818829** | 183 189,7 | ALB |
| **SUPERB (2001>2008)** | | | | | | | | | | |
| 1.8 i Turbo 20V 3U4/1K4/2K4/3K4 3-033 361 ▸ | E | 1781 | AWT | M | | | 11/02 ▸ 03/08 | 3B0145805H | **818720** | 230 207 | ALB |
| 1.8 i Turbo 20V 3U4/1KB/2KB/3KB | E | 1781 | AWT | A | | | 01/04 ▸ 03/08 | 3B0145805H | **818720** | 230 207 | ALB |
| 1.8 i Turbo 20V 3U4/1K4/2K4/3K4 ▸ 3-020 228 | E | 1781 | AWT | M | | | 12/01 ▸ 06/02 | 8D0145805D | **818720** | 230 207 | ALB |
| 1.8 i Turbo 20V 3U4/1K4/2K4/3K4 3-020 229 ▸ 3-033 360 | E | 1781 | AWT | M | | | 12/01 ▸ 11/02 | 3B0145805E | **818720** | 230 207 | ALB |
| 1.9 TDi 3U4/124/134/224/234 324/334 3-020 229 ▸ | D | 1896 | AVB,AWX | M | | | 06/02 ▸ 03/08 | 3B0145805D | | 300 209 | ALB |
| 1.9 TDi 3U4/13B/23B/33B | D | 1896 | AVF | A | | | 01/04 ▸ 03/08 | 3B0145805D | | 300 209 | ALB |
| 2.5 TDi V6 24V 3U4/165/265/365 | D | 2496 | AYM | M | | | 12/01 ▸ 08/03 | 059145805 | **818827** | 215 172 | ALB |
| 2.5 TDi V6 24V 3U4/16B/26B/36B | D | 2496 | AYM | A | | | 12/01 ▸ 08/03 | 059145805 | **818827** | 215 172 | ALB |
| **SUPERB II (2008>)** | | | | | | | | | | |
| 1.4 TFSi 16V 3T4/1G5/2G5/3G5 | E | 1390 | CAXC | M | | | 04/08 ▸ | 03C145749B | **818838** | 179 116 | ALB |
| 1.9 TDi 3T4/134/234/334 | D | 1896 | BLS | M | | | 03/08 ▸ | 1K0145803Q | **818213** | 617 407 | ALB |
| 1.9 TDi 3T4/124/224/324 | D | 1896 | BXE | M | | | 03/08 ▸ | 1K0145803T | **818898** | 617 407 | ALB |
| 2.0 TDi 16V 3T4/15C/17C/25C/27C 35C/37C | D | 1968 | BKD,CBBB/F | A | | | 03/08 ▸ | 1K0145803T | **818898** | 617 407 | ALB |
| 2.0 TDi 16V 3T4/15C/25C/35C | D | 1968 | BKD | A | | | 01/09 ▸ 03/10 | 1K0145803S | **818795** | 617 406 | ALB |
| 2.0 TDi 16V 3T4/175/17Y/275/27Y 375/37Y | D | 1968 | CBBB/F | M | | | 06/08 ▸ | 1K0145803T | **818898** | 617 407 | ALB |
| **TOYOTA** | | | | | | | | | | |
| **AVENSIS (97>2000)** | | | | | | | | | | |
| 2.0 D-4D 16V CDT220 | D | 1995 | 1CDFTV-HDCR | M | | | 08/99 ▸ 06/00 | 1794027010 | **817698** | 125 260 | ALB |
| **AVENSIS (2000>2003)** | | | | | | | | | | |
| 2.0 D-4D 16V CDT220 | D | 1995 | 1CDFTV-HDCR | M | | | 07/00 ▸ 01/03 | 1794027010 | **817698** | 125 260 | ALB |
| **AVENSIS VERSO (2001>2005)** | | | | | | | | | | |
| 2.0 D-4D 16V CLM20L ; CLM20R | D | 1995 | 1CDFTV-DCRL | M | | | 05/01 ▸ 07/05 | 1794027010 | **817698** | 125 260 | ALB |
| **VAUXHALL** | | | | | | | | | | |
| **ASTRA IV (98>)** | | | | | | | | | | |
| 1.7 CDTi,1.7 DTi 16V | D | 1686 | Y17DT,Z17DTL | M | | | 01/00 ▸ 12/05 | 9192587 | **817916** | 430 113 | ALB |
| 2.0 TDi 16V ▸ 26999999, 22999999 | D | 1995 | Y20DTH | A | | | 06/02 ▸ | 9192587 | **817916** | 430 113 | ALB |
| 2.0 TDi 16V | D | 1995 | Y20DTH | M | | | 01/01 ▸ | 9192587 | **817916** | 430 113 | ALB |
| **CORSA II (2000>2003)** | | | | | | | | | | |
| 1.7 DTi 16V | D | 1686 | Y17DT | M | | | 09/00 ▸ 08/03 | 9196705 | **818728** | 275 127 | ALB |
| **CORSA II (2003>)** | | | | | | | | | | |
| 1.3 CDTI 16V AB08F ; AB68F AC08F ; AC68F ; AE08F ; AE68F ; AS08F AS68F ; A.08/F | D | 1248 | Z13DT | M | | | 09/03 ▸ 10/06 | 93177425 | **818809** | 275 127 | ALB |
| 1.7 CDTI 16V AS08J ; AS68J | D | 1686 | Z17DTH | M | | | 09/03 ▸ 10/06 | 93177425 | **818809** | 275 127 | ALB |
| **SIGNUM (2003>2005)** | | | | | | | | | | |
| 2.0 i Turbo 16V | E | 1998 | Z20NET | M | | | 06/03 ▸ 09/05 | 12788019 | **817729** | 647 400 | ALB |
| 1.9 CDTI,1.9 CDTi 16V | D | 1910 | Z19DT,Z19DTH | M | | | 04/04 ▸ 09/05 | 13205149 | **818722** | 648,4 414,5 | ALM |
| 1.9 CDTi 16V | D | 1910 | Z19DTH | A | | | 04/04 ▸ 09/05 | 13167338 | **817730** | 647 400 | ALB |
| 2.0 DTi 16V | D | 1995 | Y20DTH | M | | | 06/03 ▸ 09/05 | 24418366 | **817697** | 647 414 | ALM |
| 2.2 DTi 16V | D | 2171 | Y22DTR | M | | | 06/03 ▸ 09/05 | 24418366 | **817697** | 647 414 | ALM |
| 2.2 DTi 16V | D | 2171 | Y22DTR | A | | | 06/03 ▸ 09/05 | 24418365 | **817729** | 647 400 | ALB |
| 3.0 CDTi V6 24V | D | 2958 | Y30DT | M | | | 06/03 ▸ 09/05 | 13108570 | **818701** | 647 400 | ALB |

| Type | | CC | | | AC | | | OE | Valeo | DIM. | TECH |
|---|---|---|---|---|---|---|---|---|---|---|---|
| **VAUXHALL** (.../...) | | | | | | | | | | | |
| **SIGNUM (2003>2005) (.../...)** | | | | | | | | | | | |
| 3.0 CDTi V6 24V | D | 2958 | Y30DT | A | | | 06/03 ▸ 09/05 | 13108570 | **818701** | 647 400 | ALB |
| **SIGNUM B (2005>)** | | | | | | | | | | | |
| 1.9 CDTI,1.9 CDTI 16V | D | 1910 | Z19DT,Z19DTH,Z19DTL | M | | | 10/05 ▸ 11/08 | 13205149 | **818722** | 648,4 414,5 | ALM |
| 1.9 CDTI 16V | D | 1910 | Z19DTH | A | | | 10/05 ▸ 11/08 | 13167338 | **817730** | 647 400 | ALB |
| 3.0 CDTI V6 24V | D | 2958 | Z30DT | M | | | 10/05 ▸ 11/08 | 12800599 | **817998** | 647 401,2 | ALB |
| 3.0 CDTI V6 24V | D | 2958 | Z30DT | A | | | 10/05 ▸ 11/08 | 12800599 | **817998** | 647 401,2 | ALB |
| **TIGRA TWINTOP (2008>)** | | | | | | | | | | | |
| 1.3 CDTi Twinport 16V | D | 1248 | Z13DT | M | | | 07/08 ▸ 08/09 | 93177425 | **818809** | 275 127 | ALB |
| **VECTRA (2002>2005)** | | | | | | | | | | | |
| 2.0 i Turbo 16V | E | 1998 | Z20NET | M | | | 05/03 ▸ 09/05 | 12788019 | **817729** | 647 400 | ALB |
| 1.9 CDTI,1.9 CDTI 16V | D | 1910 | Z19DT,Z19DTH | M | | | 04/04 ▸ 09/05 | 13167338 | **817730** | 647 400 | ALB |
| 1.9 CDTI,1.9 CDTI 16V | D | 1910 | Z19DT,Z19DTH | M | | | 04/04 ▸ 09/05 | 13205149 | **818722** | 648,4 414,5 | ALM |
| 1.9 CDTI 16V | D | 1910 | Z19DTH | A | | | 04/04 ▸ 09/05 | 13167338 | **817730** | 647 400 | ALB |
| 2.0 DTI 16V | D | 1995 | Y20DTH | M | +/- | | 04/02 ▸ 09/05 | 24418366 | **817697** | 647 414 | ALM |
| 2.2 DTI 16V | D | 2171 | Y22DTR | M | +/- | | 04/02 ▸ 09/05 | 24418366 | **817697** | 647 414 | ALM |
| 2.2 DTI 16V | D | 2171 | Y22DTR | A | + | | 04/02 ▸ 09/05 | 24418365 | **817729** | 647 400 | ALB |
| 2.2 DTI 16V | D | 2171 | Y22DTR | A | - | | 04/02 ▸ 09/05 | 24418366 | **817697** | 647 414 | ALM |
| 3.0 CDTi V6 24V | D | 2958 | Y30DT | M | | | 07/03 ▸ 09/05 | 13108570 | **818701** | 647 400 | ALB |
| 3.0 CDTi V6 24V | D | 2958 | Y30DT | A | | | 07/03 ▸ 09/05 | 13108570 | **818701** | 647 400 | ALB |
| **VECTRA (2005>)** | | | | | | | | | | | |
| 1.9 CDTI,1.9 CDTI 16V | D | 1910 | Z19DT,Z19DTH,Z19DTL | M | | | 10/05 ▸ 02/09 | 13205149 | **818722** | 648,4 414,5 | ALM |
| 1.9 CDTI 16V | D | 1910 | Z19DTH | A | | | 10/05 ▸ 02/09 | 13167338 | **817730** | 647 400 | ALB |
| 3.0 CDTI V6 24V | D | 2958 | Z30DT | M | | | 10/05 ▸ 02/09 | 12800599 | **817998** | 647 401,2 | ALB |
| 3.0 CDTI V6 24V | D | 2958 | Z30DT | A | | | 10/05 ▸ 02/09 | 12800599 | **817998** | 647 401,2 | ALB |
| **ZAFIRA (99>2003)** | | | | | | | | | | | |
| 2.0 Di 16V F75L | D | 1995 | Y20DTH | M | | | 05/99 ▸ | 9192587 | **817916** | 430 113 | ALB |
| **VAUXHALL** | | | | | | | | | | | |
| **MOVANO** | | | | | | | | | | | |
| 1.9 Dti FD0P ; JD ; JD0P FD | D | 1870 | F9Q.7.70,F9Q.7.72 | M | | | 08/00 ▸ 10/06 | 9161147 | **817115** | 680 181,5 | ALB |
| 2.2 Dti 16V FD ; JD ; UD ; ED | D | 2188 | G9T.7.20,G9T.7.22 | M | | | 09/00 ▸ 09/03 | 9161147 | **817115** | 680 181,5 | ALB |
| 2.2 DTi 16V JD0N | D | 2188 | G9T.7.50 | M | | | 10/03 ▸ 10/05 | 93179776 | **817637** | 740 145,6 | ALB |
| 2.5 Dti 16V FD0M ; JD0M ; JD0U UD0M ; ED0M | D | 2464 | G9U.7.20,G9U.7.24 | M | | | 10/01 ▸ 10/06 | 9161147 | **817115** | 680 181,5 | ALB |
| 2.5 DTi 16V ED0U ; ED0V ; ED0W FD0M ; FD0U ; FD0V ; FD0W ; HD0M ; HD0U HD0W ; JD0M ; JD0W ; UD0M ; UD0U ; UD0V UD0W ; UD4M ; UD4W ; ED0M | D | 2464 | G9U.7.50,G9U.7.54 | M | | | 10/01 ▸ 10/06 | 93179776 | **817637** | 740 145,6 | ALB |
| 2.5 CDTi 16V JD | D | 2464 | G9U.7.20 | A | | | 10/03 ▸ | 9161147 | **817115** | 680 181,5 | ALB |
| 2.8 Dti FD0C ; JD0F ; UD0C ED0C | D | 2800 | S9W.7.00,S9W.7.02 | M | | | 10/98 ▸ 10/01 | 9161147 | **817115** | 680 181,5 | ALB |
| 3.0 CDTi 16V FD0S ; HD0S ; UD0S ED0S | D | 2953 | ZD3.2.02 | M | | | 10/03 ▸ 01/06 | 93179776 | **817637** | 740 145,6 | ALB |
| **VIVARO (2001>2006)** | | | | | | | | | | | |
| 1.9 DI,1.9 DTI 1F05L ; 1G05L | D | 1870 | F9Q.7.60,F9Q.7.62 | M | | | 08/01 ▸ 06/06 | 91166035 | **817554** | 540 175,6 | ALB |
| 2.5 DTI 1F06S ; 1G03S 1G05S ; 1F05/S | D | 2464 | G9U.7.30 | M | | | 05/03 ▸ 06/06 | 93850451 | **817636** | 540 175,6 | ALB |
| **VIVARO (2006>)** | | | | | | | | | | | |
| 2.0 CDTi 16V | D | 1995 | M9R.7.80 | M | | | 07/06 ▸ | 93854162 | **818771** | 540 175,6 | ALB |
| 2.5 CDTi 16V | D | 2464 | G9U.6.30 | M | | | 07/06 ▸ | 93854162 | **818771** | 540 175,6 | ALB |
| **VOLKSWAGEN** | | | | | | | | | | | |
| **BORA** | | | | | | | | | | | |
| 1.8 i Turbo 20V 1J2/2/3 ; 1J6/2/3 1J-3-525 001 ▸ | E | 1781 | AGU,AUM,AUQ | M | | | 03/03 ▸ 05/05 | 1J0145803T | **817457** | 183 189,7 | ALB |
| 1.8 i Turbo 20V 1J2/2/3 ; 1J6/2/3 | E | 1781 | AGU,AUM | A | | | 05/00 ▸ 2003 | 1J0145803G | | 183,4 189,8 | ALB |
| 1.8 i Turbo 20V 1J2/2/3 ; 1J6/2/3 1J-3-525 001 ▸ | E | 1781 | AUM | A | | | 03/03 ▸ 05/05 | 1J0145803T | **817457** | 183 189,7 | ALB |

Charge Air Cooler Refroidisseur d'air de suralimentation Ladeluftkühler Intercooler Intercooler Turbo Radyatörü
Intercooler Охладитель всасываемого воздуха töltőlevegő hűtő Intercooler Intercooler Intercooler



• **New** Nouveau **Nuevo** Novo **Nuovo** Nieuw **Neu** Nowość **Yeni** Новый Νέο **Nový**

# VOLKSWAGEN (.../...)

| Type Ctr. | | CC | | | AC | | | OE | Valeo | DIM. | TECH |
|---|---|---|---|---|---|---|---|---|---|---|---|
| **BORA (.../...)** | | | | | | | | | | | |
| 1.8 i Turbo 20V ▸ 1J-3-525000, 1J-3-525 000 | 1J2/2/3 ; 1J6/2/3 | E | 1781 | AGU,AUM,AUQ | M | | | 09/00 ▸ 04/03 | 1J0145803G | 183,4 189,8 | ALB |
| 1.9 TDi ▸ 1J-Y-000001, 1J-X-800 001 | 1J2/0/1/2/3/5 ; 1J6 0/1/2/3/5 | D | 1896 | AGR,AHF,AJM,ALH,ASV,ATD,AUY AXR | M | | | 04/99 ▸ | 1J0145803F | 183 189,7 | ALB |
| 1.9 TDi ▸ 1J-Y-000001 | 1J2/0/2/5 ; 1J6/0/2 5 | D | 1896 | AGR,AJM,ALH,ATD,AXR | M | | | 05/99 ▸ | 1J0145803A | 183 189,7 | ALB |
| 1.9 TDi ▸ 1J-3-525 001 | 1J2/0/1/2/3 ; 1J6/0 1/2/3 | D | 1896 | AHF,ALH,ASV,ATD | M | | | 05/00 ▸ 05/05 | 1J0145803T | 183 189,7 | ALB |
| 1.9 TDi | 1J2/0/1/2/3 ; 1J6/0 1/2/3 | D | 1896 | ASZ | M | | | 04/01 ▸ 05/05 | 1J0145803M | 183 189,8 | ALB |
| 1.9 TDi | 1J2/0/1/2/3 ; 1J6/0 1/2/3 | D | 1896 | AXR | M | | | 05/01 ▸ 05/05 | 1J0145803N | •817557 189 183,4 | ALB |
| 1.9 TDi ▸ 1J-X-800 001, 1J-Y-000001 | 1J2/0/1/2/3/5 ; 1J6 0/1/2/3/5 | D | 1896 | AGR,AHF,AJM,ALH,ATD,AUY | A | | | 04/99 ▸ | 1J0145803F | 817457 183 189,7 | ALB |
| 1.9 TDi ▸ 1J-Y-000001 | 1J2/0/2/5 | D | 1896 | AGR,ALH | A | | Right/Droite | 05/99 ▸ | 1J0145803A | 817457 183 189,7 | ALB |
| 1.9 TDi ▸ 1J-3-525 001 | 1J2/0/1/2/3 ; 1J6/0 1/2/3 | D | 1896 | AHF,ATD | A | | | 05/00 ▸ 05/05 | 1J0145803T | 817457 183 189,7 | ALB |
| 1.9 TDi | 1J2/0/1/2/3 ; 1J6/0 1/2/3 | D | 1896 | ASZ | A | | | 04/01 ▸ 05/05 | 1J0145803M | 817653 183 189,8 | ALB |
| 1.9 TDi ▸ 1J-3-525 000, 1J-X-800 000 | 1J2/0/1/2/3/5 ; 1J6 0/1/2/3/5 | D | 1896 | AGR,AHF,AJM,ALH,ATD,AUY | A | | Right/Droite | 09/98 ▸ 05/03 | 1J0145803G | 183,4 189,8 | ALB |
| 1.9 TDi ▸ 1J-3-525 000, 1J-X-800 000 | 1J2/0/1/2/3/5 ; 1J6 0/1/2/3/5 | D | 1896 | AGR,AHF,AJM,ALH,ASV,ATD,AUY | M | | | 09/98 ▸ 04/03 | 1J0145803G | 183,4 189,8 | ALB |
| 1.9 TDi ▸ 1J-X-800000 | 1J2/0/2/5 | D | 1896 | AGR,AJM,ALH,ATD | M | | Right/Droite | 09/98 ▸ 04/99 | 1J0145805D | 183,4 189,8 | ALB |
| 1.9 TDi | 1J2/0/2/5 | D | 1896 | AGR,ALH | A | | Right/Droite | 09/98 ▸ 04/99 | 1J0145805D | 183,4 189,8 | ALB |
| **CORRADO** | | | | | | | | | | | |
| 1.8 i G60 | 5090 | E | 1781 | PG | M | | | 09/88 ▸ 07/93 | 535145805A | 185 142 | ALB |
| 1.8 i G60 | 5090 | E | 1781 | PG | A | | | 08/89 ▸ 07/92 | 535145805A | 185 142 | ALB |
| **EOS (2006>2010)** | | | | | | | | | | | |
| 2.0 TFSi 16V | 1F73 | E | 1984 | BWA | M | | | 05/06 ▸ | 1K0145803A | 818795 617 406 | ALB |
| 2.0 TFSi 16V | 1F73 | E | 1984 | BWA | M | | | 05/06 ▸ 05/07 | 1K0145803T | 818898 617 407 | ALB |
| 2.0 TFSi 16V | 1F73 | E | 1984 | BWA | M | | | 05/06 ▸ 05/07 | 1K0145803S | 818795 617 406 | ALB |
| 2.0 TFSi 16V | 1F73 | E | 1984 | BWA | A | | | 05/06 ▸ 11/10 | 1K0145803S | 818795 617 406 | ALB |
| 2.0 TFSi 16V | 1F73 | E | 1984 | BWA | A | | | 05/06 ▸ | 1K0145803A | 818795 617 406 | ALB |
| 2.0 TFSi 16V | 1F73 | E | 1984 | BWA | A | | | 05/06 ▸ 11/10 | 1K0145803T | 818898 617 407 | ALB |
| **FOX** | | | | | | | | | | | |
| 1.4 TDi | 5Z11 | D | 1422 | BNM | M | | | 11/04 ▸ | 6Q0145804A | 817556 183 189 | ALB |
| **GOLF III (91>97)** | | | | | | | | | | | |
| 1.9 TDi | 1H1/0/2/3/5 | D | 1896 | 1Z,AHU,ALE | M | | | 06/93 ▸ 12/97 | 1H0145805B | 817764 176 145 | ALB |
| 1.9 TD,1.9 TDi | 1H0/0 ; 1H1/0/2/3/5 1H5/0/2/3/5 | D | 1896 | 1Z,AAZ,AFN,AHU,ALE | M | | | 06/93 ▸ 04/99 | 1H0145805A | 817764 176 145 | ALB |
| 1.9 TDi | 1H1/0/2/3 | D | 1896 | 1Z,AHU | A | | | 06/93 ▸ 12/97 | 1H0145805B | 817764 176 145 | ALB |
| 1.9 TDi | 1H1/0/2/3 ; 1H5/0/2 3/B | D | 1896 | 1Z,AFN,AHU | A | | | 06/93 ▸ 02/99 | 1H0145805A | 817764 176 145 | ALB |
| **GOLF III CABRIOLET (98>2002)** | | | | | | | | | | | |
| 1.9 TDi | 1E7/1/2/3/4/6 | D | 1896 | AFN,AHU,ALE | M | | | 03/98 ▸ 12/01 | 1H0145805A | 817764 176 145 | ALB |
| 1.9 TDi | 1E7/1/2/3/4/6 | D | 1896 | AVG | M | | | 08/99 ▸ 10/00 | 1E0145805 | 817765 176 145 | ALB |
| **GOLF IV (97>2003)** | | | | | | | | | | | |
| 1.4 i 16V | 1J12 | E | 1390 | AXP | M | | C | 05/00 ▸ 10/01 | 1J0145803A | 817457 183 189,7 | ALB |
| 1.4 i 16V | 1J12 | E | 1390 | AXP | M | | C | 05/00 ▸ 10/01 | 1J0145803F | 817457 183 189,7 | ALB |
| 1.6 i | 1J12 | E | 1595 | AEH | M | | C | 05/00 ▸ 06/02 | 1J0145803F | 817457 183 189,7 | ALB |
| 1.6 i | 1J12 | E | 1595 | AEH | M | | C | 05/00 ▸ 06/02 | 1J0145803A | 817457 183 189,7 | ALB |
| 1.6 i | 1J12 | E | 1595 | AEH | M | | | 05/00 ▸ 06/02 | 1J0145803G | 183,4 189,8 | ALB |
| 1.6 i | 1J12 | E | 1595 | AEH | M | | | 05/00 ▸ 06/02 | 1J0145805B | 183,4 189,8 | ALB |

# VOLKSWAGEN (.../...)

## GOLF IV (97>2003) (.../...)

| Type Ctr. | | CC | | AC | | 2+3 | OE | Valeo | DIM. | TECH |
|---|---|---|---|---|---|---|---|---|---|---|
| 1.8 i,1.8 i Turbo<br>1.8 i Turbo 20V | 1J1/2/3/5/6 ; 1J5/2<br>3 | E | 1781 | AGU,ARZ,AUM,AUQ | M | | 10/97 ▸ 05/06 | 1J0145803G | | 183,4 189,8 | ALB |
| 1.8 i Turbo 20V | 1J16 | E | 1781 | AGU | M | C | 10/97 ▸ 03/99 | 1J0145805D | | 183,4 189,8 | ALB |
| 1.8 i Turbo 20V | 1J16 | E | 1781 | AGU | M | C | 04/99 ▸ 05/00 | 1J0145803F | **817457** | 183 189,7 | ALB |
| 1.8 i Turbo 20V | 1J16 | E | 1781 | AGU | M | C | 04/99 ▸ 05/00 | 1J0145803A | **817457** | 183 189,7 | ALB |
| 1.8 i Turbo 20V<br>1J-3-525001 ▸ | 1J52 ; 1J1/3/6 | E | 1781 | AGU,AUM,AUQ | M | | 03/03 ▸ 05/04 | 1J0145803T | **817457** | 183 189,7 | ALB |
| 1.8 i Turbo 20V | 1J1/5/6 | E | 1781 | AGU | A | C | 08/98 ▸ 03/99 | 1J0145805D | | 183,4 189,8 | ALB |
| 1.8 i Turbo 20V | 1J1/2/3/5/6 ; 1J5/2<br>3 | E | 1781 | AGU,AUM | A | | 08/98 ▸ 03/03 | 1J0145803G | | 183,4 189,8 | ALB |
| 1.8 i Turbo 20V | 1J1/5/6 | E | 1781 | AGU | A | C | 04/99 ▸ 05/00 | 1J0145803A | **817457** | 183 189,7 | ALB |
| 1.8 i Turbo 20V | 1J1/5/6 | E | 1781 | AGU | A | C | 04/99 ▸ 05/00 | 1J0145803F | **817457** | 183 189,7 | ALB |
| 1.8 i Turbo 20V<br>1J-3-525001 ▸ | 1J16 ; 1J52 | E | 1781 | AUM | A | | 03/03 ▸ 05/04 | 1J0145803T | **817457** | 183 189,7 | ALB |
| 1.9 TDi | 1J1/2/5/6 | D | 1896 | AGR,AHF,ALH | M | | 10/97 ▸ 05/00 | 1J0145805B | | 183,4 189,8 | ALB |
| 1.9 TDi | 1J1/2/5/6 | D | 1896 | AGR,AHF,ALH | M | C | 10/97 ▸ 03/99 | 1J0145805D | | 183,4 189,8 | ALB |
| 1.9 TDi | 1J1/2/5/6 ; 1J5/2/5 | D | 1896 | AGR,AHF,AJM,ALH,AUY | M | C | 04/99 ▸ | 1J0145803A | **817457** | 183 189,7 | ALB |
| 1.9 TDi | 1J1/2/5/6 ; 1J5/2/5 | D | 1896 | AGR,AHF,AJM,ALH,AUY | M | C | 04/99 ▸ | 1J0145803F | **817457** | 183 189,7 | ALB |
| 1.9 TDi<br>1J-3W385001 ▸ | 1J1/0/1/2/3/6 ; 1J5<br>0/1/2/3 | D | 1896 | AGR,AHF,ALH,ASV,ATD | M | | 05/00 ▸ | 1J0145803T | **817457** | 183 189,7 | ALB |
| 1.9 TDi | 1J1/0/1/2/3/6 ; 1J5<br>0/1/2/3 | D | 1896 | ASZ | M | | 04/01 ▸ 05/06 | 1J0145803M | **817653** | 183 189,8 | ALB |
| 1.9 TDi | 1J1/0/1/3 ; 1J5/0/1<br>2/3 | D | 1896 | AXR | M | | 05/01 ▸ 06/06 | 1J0145803N | •**817557** | 189 183,4 | ALB |
| 1.9 TDi | 1J1/2/5 | D | 1896 | AGR,AHF,ALH | A | C | 10/97 ▸ 03/99 | 1J0145805D | | 183,4 189,8 | ALB |
| 1.9 TDi | 1J1/2/5 | D | 1896 | AGR,AHF,ALH | A | | 10/97 ▸ 05/00 | 1J0145805B | | 183,4 189,8 | ALB |
| 1.9 TDi | 1J1/2/5 ; 1J5/2/5 | D | 1896 | AGR,AHF,ALH | A | C | 04/99 ▸ 05/00 | 1J0145803F | **817457** | 183 189,7 | ALB |
| 1.9 TDi | 1J1/2/5 ; 1J5/2/5 | D | 1896 | AGR,AHF,ALH | A | C | 04/99 ▸ 05/00 | 1J0145803A | **817457** | 183 189,7 | ALB |
| 1.9 TDi | 1J1/0/1/2/3 ; 1J5/0<br>1/2/3 | D | 1896 | ASZ | A | | 04/01 ▸ 05/06 | 1J0145803M | **817653** | 183 189,8 | ALB |
| 1.9 TDi<br>1J-3W385001 ▸ | 1J1/0/1/2/3 ; 1J5/0<br>1/2/3 | D | 1896 | AHF,ATD | A | | 12/02 ▸ 05/06 | 1J0145803T | **817457** | 183 189,7 | ALB |
| 1.9 TDi<br>▸ 1J-3W385000, 1J-W385000 | 1J1/0/1/2/3/5/6<br>1J5/0/1/2/3/5 | D | 1896 | AGR,AHF,AJM,ALH,ASV,ATD,AUY | M | C | 10/97 ▸ 05/06 | 1J0145803G | | 183,4 189,8 | ALB |
| 1.9 TDi | 1J1/0/1/2/3/5 ; 1J5<br>0/1/2/3/5 | D | 1896 | AGR,AHF,ALH,ATD,AUY | A | | 10/97 ▸ 11/02 | 1J0145803G | | 183,4 189,8 | ALB |

## GOLF V (2003>)

| | | | | | | | | | | | |
|---|---|---|---|---|---|---|---|---|---|---|---|
| 1.4 TFSi 16V,1.4 TSi 16V | 1K1/0/1/B ; 1K5/1/2 | E | 1390 | BLG,BMY | M | | 06/07 ▸ 11/08 | 1K0145803T | **818898** | 617 407 | ALB |
| 1.4 TFSi 16V,1.4 TSi 16V | 1K1/0/1/B ; 1K5/1/2 | E | 1390 | BLG,BMY | M | | 06/07 ▸ | 1K0145803B | **818795** | 617 406 | ALB |
| 1.4 TFSi 16V,1.4 TSi 16V | 1K1/0/1/B ; 1K5/1/2 | E | 1390 | BLG,BMY | A | | 06/07 ▸ 11/08 | 1K0145803T | **818898** | 617 407 | ALB |
| 1.4 TFSi 16V,1.4 TSi 16V | 1K1/0/1/B ; 1K5/1/2 | E | 1390 | BLG,BMY | A | | 06/07 ▸ | 1K0145803B | **818795** | 617 406 | ALB |
| 2.0 FSi 16V,2.0 TFSi 16V | 1K52 ; 1K1/1/2/3/9/D | E | 1984 | AXX,BWA,BYD | M | | 09/04 ▸ | 1K0145803A | **818795** | 617 406 | ALB |
| 2.0 FSi 16V,2.0 TFSi 16V | 1K52 ; 1K1/1/2/3/9/D | E | 1984 | AXX,BWA,BYD | M | | 09/04 ▸ 03/09 | 1K0145803S | **818795** | 617 406 | ALB |
| 2.0 FSi 16V,2.0 TFSi 16V | 1K52 ; 1K1/1/2/3/9/D | E | 1984 | AXX,BWA,BYD | M | | 09/04 ▸ 03/09 | 1K0145803T | **818898** | 617 407 | ALB |
| 2.0 FSi 16V,2.0 TFSi 16V | 1K52 ; 1K1/1/2/3/9/D | E | 1984 | AXX,BWA,BYD | A | | 09/04 ▸ | 1K0145803A | **818795** | 617 406 | ALB |
| 2.0 FSi 16V,2.0 TFSi 16V | 1K52 ; 1K1/1/2/3/9/D | E | 1984 | AXX,BWA,BYD | A | | 09/04 ▸ 03/09 | 1K0145803T | **818898** | 617 407 | ALB |
| 2.0 FSi 16V,2.0 TFSi 16V | 1K52 ; 1K1/1/2/3/9/D | E | 1984 | AXX,BWA,BYD | A | | 09/04 ▸ 03/09 | 1K0145803S | **818795** | 617 406 | ALB |
| 1.9 TDi | 1K10 | D | 1896 | BJB | M | | 10/03 ▸ | 1K0145803A | **818795** | 617 406 | ALB |
| 1.9 TDi | 1K10 | D | 1896 | BJB | M | | 10/03 ▸ 05/05 | 1K0145803S | **818795** | 617 406 | ALB |
| 1.9 TDi | 1K1/0/1/2/B ; 1K5/0<br>1/2 | D | 1896 | BJB,BKC,BRU,BXE,BXF | M | | 10/03 ▸ | 1K0145803T | **818898** | 617 407 | ALB |
| 1.9 TDi | 1K1/0/1/2 | D | 1896 | BKC,BRU | M | | 10/03 ▸ 06/05 | 1K0145803E | **818795** | 617 406 | ALB |
| 1.9 TDi | 1K1/0/1/2 | D | 1896 | BJB,BKC,BRU | M | | 10/03 ▸ | 1K0145803 | **818795** | 617 406 | ALB |
| 1.9 TDi | 1K1/0/1/2/B ; 1K5/0<br>1/2 | D | 1896 | BLS,BLS/F | M | | 08/05 ▸ | 1K0145803Q | **818213** | 617 407 | ALB |
| 1.9 TDi | 1K1/0/1/2/B ; 1K5/0<br>1/2 | D | 1896 | BLS | M | | 08/05 ▸ | 1K0145803F | **818213** | 617 407 | ALB |
| 1.9 TDi | 1K1/0/1/2 | D | 1896 | BKC | A | | 10/03 ▸ 05/05 | 1K0145803E | **818795** | 617 406 | ALB |
| 1.9 TDi | 1K1/0/1/2/B | D | 1896 | BKC,BXE | A | | 10/03 ▸ 11/08 | 1K0145803T | **818898** | 617 407 | ALB |
| 1.9 TDi | 1K1/0/1/2/B ; 1K5/0<br>1/2 | D | 1896 | BLS | A | | 05/05 ▸ | 1K0145803F | **818213** | 617 407 | ALB |
| 1.9 TDi | 1K1/0/1/2/B ; 1K5/0<br>1/2 | D | 1896 | BLS,BLS/F | A | | 05/05 ▸ 11/08 | 1K0145803Q | **818213** | 617 407 | ALB |
| 2.0 TDi 16V | 1K1/0/1/2/B ; 1K5/1<br>2 | D | 1968 | AZV,BKD | M | | 10/03 ▸ | 1K0145803A | **818795** | 617 406 | ALB |

Charge Air Cooler Refroidisseur d'air de suralimentation Ladeluftkühler Intercooler Intercooler Turbo Radyatörü
Intercooler Охладитель всасываемого воздуха töltőlevegő hűtő Intercooler Intercooler Intercooler



• **New** Nouveau **Nuevo** Novo **Nuovo** Nieuw **Neu** Nowość **Yeni** Новый Νέο **Novy**

# VOLKSWAGEN (.../...)

| | Type Ctr. | | CC | | AC | | | OE | Valeo | DIM. | TECH |
|---|---|---|---|---|---|---|---|---|---|---|---|
| **GOLF V (2003>) (.../...)** | | | | | | | | | | | |
| 2.0 SDi,2.0 TDi 16V | 1K1/0/1/2/3/B ; 1K5/1/2 | D | 1968 | AZV,BDK,BKD,BMN | M | | | 10/03 ▸ | 1K0145803T | **818898** | 617 407 | ALB |
| 2.0 SDi,2.0 TDi 16V | 1K1/0/1/2/B ; 1K5/1/2 | D | 1968 | AZV,BDK,BKD | M | | | 10/03 ▸ | 1K0145803S | **818795** | 617 406 | ALB |
| 2.0 TDi 16V | 1K1/2/3/B | D | 1968 | BMN | M | | | 11/05 ▸ 11/08 | 1K0145805G | **818899** | 617 407 | ALB |
| 2.0 TDi 16V | 1K1/0/1/2/B | D | 1968 | AZV,BKD | A | | | 10/03 ▸ | 1K0145803A | **818795** | 617 406 | ALB |
| 2.0 TDi 16V | 1K1/0/1/2/B | D | 1968 | AZV,BKD | A | | | 10/03 ▸ 11/08 | 1K0145803S | **818795** | 617 406 | ALB |
| 2.0 TDi 16V | 1K1/0/1/2/3/B | D | 1968 | AZV,BKD,BMN | A | | | 10/03 ▸ 11/08 | 1K0145803T | **818898** | 617 407 | ALB |
| 2.0 TDi 16V | 1K1/2/3/B | D | 1968 | BMN | A | | | 11/05 ▸ 11/08 | 1K0145805G | **818899** | 617 407 | ALB |
| **GOLF V PLUS (2005>)** | | | | | | | | | | | |
| 1.4 FSi 16V | 5M1/1/2/C | E | 1390 | BMY | M | | | 05/06 ▸ 06/08 | 1J0145803T | **817457** | 183 189,7 | ALB |
| 1.4 FSi 16V | 1K1/0/1/2 | E | 1390 | CAXA | M | | | 11/07 ▸ | 03C145749B | **818838** | 179 116 | ALB |
| 1.4 FSi 16V,1.4 TFSi 16V | 5M1/1/2/C | E | 1390 | BLG,BMY | A | | | 05/06 ▸ 06/08 | 1J0145803T | **817457** | 183 189,7 | ALB |
| 1.4 FSi 16V | 1K1/0/1/2 | E | 1390 | CAXA | A | | | 07/07 ▸ | 03C145749B | **818838** | 179 116 | ALB |
| 1.9 TDi | 5M1/0/1/2 | D | 1896 | BKC,BRU,BXF | M | | | 01/05 ▸ | 1K0145803E | **818795** | 617 406 | ALB |
| 1.9 TDi | 5M1/0/1/2 | D | 1896 | BKC,BRU,BXE,BXF | M | | | 01/05 ▸ 01/09 | 1K0145803T | **818898** | 617 407 | ALB |
| 1.9 TDi | 5M1/0/1/2/C | D | 1896 | BLS | M | | | 06/05 ▸ | 1K0145803F | **818213** | 617 407 | ALB |
| 1.9 TDi | 5M1/0/1/2/C | D | 1896 | BLS | M | | | 06/05 ▸ 01/09 | 1K0145803Q | **818213** | 617 407 | ALB |
| 1.9 TDi | 5M1/0/1/2 | D | 1896 | BKC,BXE | A | | | 01/05 ▸ 01/09 | 1K0145803T | **818898** | 617 407 | ALB |
| 1.9 TDi | 5M1/0/1/2 | D | 1896 | BKC | A | | | 01/05 ▸ | 1K0145803E | **818795** | 617 406 | ALB |
| 1.9 TDi | 5M1/2/C | D | 1896 | BLS | A | | | 06/05 ▸ | 1K0145803F | **818213** | 617 407 | ALB |
| 1.9 TDi | 5M1/2/C | D | 1896 | BLS | A | | | 06/05 ▸ 01/09 | 1K0145803Q | **818213** | 617 407 | ALB |
| 2.0 TDi 16V | 5M1/0/1/2 | D | 1968 | AZV,BEE,BKD | M | | | 01/05 ▸ | 1K0145803T | **818898** | 617 407 | ALB |
| 2.0 TDi 16V | 5M1/0/1/2 | D | 1968 | AZV,BEE,BKD | M | | | 01/05 ▸ | 1K0145803S | **818795** | 617 406 | ALB |
| 2.0 TDi 16V | 5M1/0/1/2 | D | 1968 | AZV,BEE,BKD | M | | | 01/05 ▸ | 1K0145803A | **818795** | 617 406 | ALB |
| 2.0 TDi 16V | 5M1/0/1/2 | D | 1968 | AZV,BKD | A | | | 01/05 ▸ | 1K0145803A | **818795** | 617 406 | ALB |
| 2.0 TDi 16V | 5M1/0/1/2 | D | 1968 | AZV,BKD | A | | | 01/05 ▸ 01/09 | 1K0145803S | **818795** | 617 406 | ALB |
| 2.0 TDi 16V | 5M1/0/1/2 | D | 1968 | AZV,BKD | A | | | 01/05 ▸ 01/09 | 1K0145803T | **818898** | 617 407 | ALB |
| **GOLF VI (2008>)** | | | | | | | | | | | |
| 1.4 TFSi | 5K1/2/3/4 | E | 1390 | CAXA | M | | | 10/08 ▸ | 03C145749B | **818838** | 179 116 | ALB |
| 1.4 TFSi | 5K1/2/3/4 | E | 1390 | CAXA | A | | | 10/08 ▸ | 03C145749B | **818838** | 179 116 | ALB |
| **JETTA (2005>2010)** | | | | | | | | | | | |
| 1.4 TSi 16V | 1K2/1/2 | E | 1390 | BLG,BMY | M | | | 07/06 ▸ | 1K0145803B | **818795** | 617 406 | ALB |
| 1.4 TSi 16V | 1K2/1/2 | E | 1390 | BLG,BMY,CAVD | M | | | 07/06 ▸ 10/10 | 1K0145803T | **818898** | 617 407 | ALB |
| 1.4 TSi 16V | 1K2/0/1/2 | E | 1390 | CAXA | M | | | 07/07 ▸ 06/08 | 03C145749B | **818838** | 179 116 | ALB |
| 1.4 TSi 16V | 1K2/1/2 | E | 1390 | BLG,BMY,CAVD | A | | | 07/06 ▸ 10/10 | 1K0145803T | **818898** | 617 407 | ALB |
| 1.4 TSi 16V | 1K2/1/2 | E | 1390 | BLG,BMY | A | | | 07/06 ▸ | 1K0145803B | **818795** | 617 406 | ALB |
| 1.4 TSi 16V | 1K2/0/1/2 | E | 1390 | CAXA | A | | | 10/07 ▸ 06/08 | 03C145749B | **818838** | 179 116 | ALB |
| 2.0 TFSI 16V | 1K22 | E | 1984 | BWA | M | | | 09/05 ▸ | 1K0145803A | **818795** | 617 406 | ALB |
| 2.0 TFSI 16V | 1K22 | E | 1984 | BWA | M | | | 09/05 ▸ 06/08 | 1K0145803S | **818795** | 617 406 | ALB |
| 2.0 TFSI 16V | 1K22 | E | 1984 | BWA | M | | | 09/05 ▸ 06/08 | 1K0145803T | **818898** | 617 407 | ALB |
| 2.0 TFSI 16V | 1K22 | E | 1984 | BWA | A | | | 10/05 ▸ | 1K0145803A | **818795** | 617 406 | ALB |
| 2.0 TFSI 16V,2.0 TSI 16V | 1K2/2/3/7 | E | 1984 | BWA,CCTB | A | | | 10/05 ▸ 10/10 | 1K0145803S | **818795** | 617 406 | ALB |
| 2.0 TFSI 16V,2.0 TSI 16V | 1K2/2/3/7 | E | 1984 | BWA,CCTB | A | | | 10/05 ▸ 10/10 | 1K0145803T | **818898** | 617 407 | ALB |
| 1.9 TDI | 1K2/0/1/2 | D | 1896 | BLS | M | | | 08/05 ▸ | 1K0145803Q | **818213** | 617 407 | ALB |
| 1.9 TDI | 1K2/0/1/2 | D | 1896 | BKC | M | | | 08/05 ▸ | 1K0145803E | **818795** | 617 406 | ALB |
| 1.9 TDI | 1K2/0/1/2 | D | 1896 | BLS | M | | | 08/05 ▸ | 1K0145803F | **818213** | 617 407 | ALB |
| 1.9 TDI | 1K2/0/1/2 | D | 1896 | BLS | A | | | 09/05 ▸ | 1K0145803F | **818213** | 617 407 | ALB |
| 1.9 TDI | 1K2/0/1/2 | D | 1896 | BKC | A | | | 09/05 ▸ | 1K0145803E | **818795** | 617 406 | ALB |
| 1.9 TDI | 1K2/0/1/2 | D | 1896 | BLS | A | | | 09/05 ▸ 06/08 | 1K0145803Q | **818213** | 617 407 | ALB |
| 1.9 TDI ▸ 1K-9-091 375 | 1K2/0/1/2 | D | 1896 | BKC,BXE | M | | | 08/05 ▸ 06/08 | 1K0145803T | **818898** | 617 407 | ALB |
| 1.9 TDI ▸ 1K-9-091 375 | 1K2/0/1/2 | D | 1896 | BKC,BXE | A | | | 09/05 ▸ 06/08 | 1K0145803T | **818898** | 617 407 | ALB |
| 2.0 TDi 16V | 1K2/0/1/2 | D | 1968 | AZV,BKD | M | | | 08/05 ▸ | 1K0145803A | **818795** | 617 406 | ALB |
| 2.0 TDi 16V | 1K2/0/1/2 | D | 1968 | AZV,BKD,CBDB/F,CEGA/F | M | | | 08/05 ▸ 10/10 | 1K0145803T | **818898** | 617 407 | ALB |
| 2.0 TDi 16V | 1K2/0/1/2 | D | 1968 | AZV,BKD | M | | | 08/05 ▸ 06/08 | 1K0145803S | **818795** | 617 406 | ALB |
| 2.0 TDi 16V | 1K2/0/1/2 | D | 1968 | AZV,BKD | A | | | 09/05 ▸ 06/08 | 1K0145803S | **818795** | 617 406 | ALB |
| 2.0 TDi 16V | 1K2/0/1/2 | D | 1968 | AZV,BKD | A | | | 09/05 ▸ | 1K0145803A | **818795** | 617 406 | ALB |
| 2.0 TDi 16V | 1K2/0/1/2 | D | 1968 | AZV,BKD,CBDB/F,CEGA/F | A | | | 09/05 ▸ 10/10 | 1K0145803T | **818898** | 617 407 | ALB |
| **LUPO** | | | | | | | | | | | |
| 1.2 TDi | 6E10 | D | 1191 | ANY,AYZ | M | | | 05/99 ▸ 05/03 | 6E0145805B | **817486** | 220 133,4 | ALB |
| 1.4 TDi | 6X10 | D | 1422 | AMF | M | | | 05/99 ▸ 07/05 | 6E0145805B | **817486** | 220 133,4 | ALB |
| **NEW BEETLE (98>2001)** | | | | | | | | | | | |
| 1.8 i Turbo 20V | 9C13 ; 1C1/5/7/8 | E | 1781 | APH,AVC,AWU,AWV | M | | | 07/99 ▸ 05/01 | 1C0145805A | | 183 189,8 | ALB |

# VOLKSWAGEN (.../...)

## NEW BEETLE (98>2001) (.../...)

| Type | Ctr. | | CC | | | AC | | | OE | Valeo | DIM. | TECH |
|---|---|---|---|---|---|---|---|---|---|---|---|---|
| 1.8 i Turbo 20V | 1C1/5/7/8 | E | 1781 | APH,AWV | A | | | 01/99 ▸ 05/01 | 1C0145805A | | 183 189,8 | ALB |
| 1.9 TDi | 9C13 ; 1C1/3/5/8 | D | 1896 | ALH | M | | | 03/99 ▸ 05/01 | 1C0145803 | | 183 189,8 | ALB |
| 1.9 TDi | 9C13 | D | 1896 | ATD | M | | | 10/00 ▸ 05/01 | 1C0145803D | **817555** | 183 189,8 | ALB |
| 1.9 TDi | 9C13 ; 1C1/3/5/8 | D | 1896 | ALH | A | | | 03/99 ▸ 05/01 | 1C0145803 | | 183 189,8 | ALB |
| 1.9 TDi | 9C13 | D | 1896 | ALH | M | | | 11/98 ▸ 03/99 | 1C0145805A | | 183 189,8 | ALB |
| ▸ X-945 560 | | | | | | | | | | | | |
| 1.9 TDi | 9C13 | D | 1896 | ALH | A | | | 11/98 ▸ 03/99 | 1C0145805A | | 183 189,8 | ALB |

## NEW BEETLE (2001>2005)

| Type | Ctr. | | CC | | | AC | | | OE | Valeo | DIM. | TECH |
|---|---|---|---|---|---|---|---|---|---|---|---|---|
| 1.8 i Turbo 20V | 1Y73 ; 9C13 ; 1C1/3 6/7/8/S | E | 1781 | AWP,AWU,AWV | M | | | 06/01 ▸ 06/05 | 1C0145803 | | 183 189,8 | ALB |
| 1.8 i Turbo 20V | 9C13 ; 1C1/3/5/8/S | E | 1781 | AWU,AWV,BKF | A | | | 06/01 ▸ 06/05 | 1C0145803 | | 183 189,8 | ALB |
| 1.9 TDi | 9C13 | D | 1896 | ALH | M | | | 06/01 ▸ 06/05 | 1C0145803 | | 183 189,8 | ALB |
| 1.9 TDi | 1C13 ; 9C13 | D | 1896 | ATD | M | | | 06/01 ▸ 06/05 | 1C0145803D | **817555** | 183 189,8 | ALB |
| 1.9 TDi | 1C13 ; 9C13 | D | 1896 | ALH | A | | | 06/01 ▸ 06/04 | 1C0145803 | | 183 189,8 | ALB |

## NEW BEETLE (2005>)

| Type | Ctr. | | CC | | | AC | | | OE | Valeo | DIM. | TECH |
|---|---|---|---|---|---|---|---|---|---|---|---|---|
| 1.9 TDi | 1Y73 ; 1C1/3/4/5 | D | 1896 | BSW | M | | | 07/05 ▸ 09/10 | 1C0145803D | **817555** | 183 189,8 | ALB |
| 1.9 TDi | 1C1/4/5 | D | 1896 | BEW | A | | | 07/05 ▸ 12/06 | 1C0145803D | **817555** | 183 189,8 | ALB |

## PASSAT (88>93)

| Type | Ctr. | | CC | | | AC | | | OE | Valeo | DIM. | TECH |
|---|---|---|---|---|---|---|---|---|---|---|---|---|
| 1.6 TD | 312/1/2/3/5 ; 315/1 2/3/5 | D | 1588 | RA,SB | M | | | 06/88 ▸ 10/93 | 3A0145805A | | 209 194 | ALB |
| 1.6 TD | 312/2/3/5 ; 315/2/3 5 | D | 1588 | RA | A | | | 08/88 ▸ 07/90 | 3A0145805A | | 209 194 | ALB |

## PASSAT (93>97)

| Type | Ctr. | | CC | | | AC | | | OE | Valeo | DIM. | TECH |
|---|---|---|---|---|---|---|---|---|---|---|---|---|
| 1.9 TDi | 3A2/2/3/5 ; 3A5/2/3 5 | D | 1896 | 1Z | M | | | 10/93 ▸ 04/95 | 3A0145805A | | 209 194 | ALB |
| 1.9 TDi | 3A2/2/3/5 ; 3A5/2/3 5 | D | 1896 | 1Z | A | | | 10/93 ▸ 04/95 | 3A0145805A | | 209 194 | ALB |

## PASSAT (96>2000)

| Type | Ctr. | | CC | | | AC | | | OE | Valeo | DIM. | TECH |
|---|---|---|---|---|---|---|---|---|---|---|---|---|
| 1.8 i Turbo 20V | 3B2/3/A ; 3B5/3/A | E | 1781 | AEB | M | | Right/Droite | 10/96 ▸ 12/98 | 058145805A | **817625** | 240 175 | ALB |
| 1.8 i Turbo 20V | 3B23 ; 3B53 | E | 1781 | ANB,APU | M | | | 01/99 ▸ 08/00 | 058145805B | **817625** | 240 175 | ALB |
| 1.8 i Turbo 20V | 3B23 ; 3B53 | E | 1781 | AEB | A | | | 10/96 ▸ 12/98 | 058145805A | **817625** | 240 175 | ALB |
| 1.8 i Turbo 20V | 3B23 ; 3B53 | E | 1781 | ANB,APU | A | | | 01/99 ▸ 08/00 | 058145805B | **817625** | 240 175 | ALB |
| 2.3 i VR5 20V | 3B23 | E | 2324 | AGZ | M | | Right/Droite | 09/97 ▸ 08/98 | 058145805A | **817625** | 240 175 | ALB |
| 2.8 i V6 30V | 3B26 | E | 2771 | AQD | M | | | 01/99 ▸ 04/99 | 058145805A | **817625** | 240 175 | ALB |
| 2.8 i V6 30V | 3B26 | E | 2771 | AQD | A | | | 01/99 ▸ 04/99 | 058145805A | **817625** | 240 175 | ALB |
| 1.9 TDi | 3B53 ; 3B2/3/A | D | 1896 | AFN,ATJ,AVG | M | | | 10/96 ▸ 08/00 | 058145805B | **817625** | 240 175 | ALB |
| 1.9 TDi | 3B2/3/A ; 3B5/3/A | D | 1896 | AFN,AHH,AHU,AJM | M | | Right/Droite | 10/96 ▸ 08/00 | 058145805A | **817625** | 240 175 | ALB |
| 1.9 TDi | 3B23 ; 3B53 | D | 1896 | AFN,AHH,AHU,AJM | A | | | 10/96 ▸ 08/00 | 058145805A | **817625** | 240 175 | ALB |
| 1.9 TDi | 3B23 ; 3B53 | D | 1896 | AFN,ATJ,AVG | A | | | 10/96 ▸ 08/00 | 058145805B | **817625** | 240 175 | ALB |
| 2.5 TDi V6 | 3B26 ; 3B56 | D | 2496 | AFB,AKN | M | | | 09/99 ▸ 08/00 | 059145805 | **818827** | 215 172 | ALB |
| 2.5 TDi V6 | 3B26 ; 3B56 | D | 2496 | AFB,AKN | M | | | 09/99 ▸ 08/00 | 059145806 | **818828** | 192 172 | ALB |
| 2.5 TDi V6 | 3B26 ; 3B56 | D | 2496 | AFB,AKN | A | | | 08/98 ▸ 08/00 | 059145805 | **818827** | 215 172 | ALB |
| 2.5 TDi V6 | 3B26 ; 3B56 | D | 2496 | AFB,AKN | A | | | 08/98 ▸ 08/00 | 059145806 | **818828** | 192 172 | ALB |

## PASSAT (2000>2005)

| Type | Ctr. | | CC | | | AC | | | OE | Valeo | DIM. | TECH |
|---|---|---|---|---|---|---|---|---|---|---|---|---|
| 1.8 i Turbo 20V | 3B3/0/1/2/3/4 ; 3B6 0/1/2/3/4 | E | 1781 | AWT | M | | | 10/00 ▸ 05/05 | 3B0145805H | **818720** | 230 207 | ALB |
| 1.8 i Turbo 20V | 3B64 | E | 1781 | AWT | A | | Left/gauche | 10/00 ▸ 05/05 | 059145805 | **818827** | 215 172 | ALB |
| 1.8 i Turbo 20V | 3B3/0/1/2/3/4/6 3B6/0/1/2/3/4/6 | E | 1781 | AWM,AWT | A | | | 10/00 ▸ 05/05 | 3B0145805H | **818720** | 230 207 | ALB |
| 1.8 i Turbo 20V | 3B64 | E | 1781 | AWT | A | | Right/Droite | 10/00 ▸ 05/05 | 059145806 | **818828** | 192 172 | ALB |
| 2.0 i 20V | 3B63 | E | 1984 | ALT | A | | Right/Droite | 11/01 ▸ 04/02 | 059145806 | **818828** | 192 172 | ALB |
| 2.0 i 20V | 3B63 | E | 1984 | ALT | A | | Left/gauche | 11/01 ▸ 04/02 | 059145805 | **818827** | 215 172 | ALB |
| 2.8 i V6 | 3B32 | E | 2771 | ATQ | M | | Right/Droite | 10/00 ▸ 04/02 | 059145806 | **818828** | 192 172 | ALB |
| 2.8 i V6 | 3B32 | E | 2771 | ATQ | M | | Left/gauche | 10/00 ▸ 04/02 | 059145805 | **818827** | 215 172 | ALB |
| 2.8 i V6 | 3B3/1/2/3/4/5 ; 3B6 1/3 | E | 2771 | AMX,ATQ,BBG | A | | Right/Droite | 10/00 ▸ 05/05 | 059145806 | **818828** | 192 172 | ALB |
| 2.8 i V6 | 3B3/1/2/3/4/5 ; 3B6 1/3 | E | 2771 | AMX,ATQ,BBG | A | | Left/gauche | 10/00 ▸ 05/05 | 059145805 | **818827** | 215 172 | ALB |
| 4.0 i W8 | 3B67 ; 3B3/7/8 | E | 3999 | BDN | M | | Left/gauche | 09/01 ▸ 05/05 | 059145805 | **818827** | 215 172 | ALB |
| 4.0 i W8 | 3B67 ; 3B3/7/8 | E | 3999 | BDN | M | | Right/Droite | 09/01 ▸ 05/05 | 059145806 | **818828** | 192 172 | ALB |
| 4.0 i W8 | 3B3/7 ; 3B6/7/8 | E | 3999 | BDN,BDP | A | | Right/Droite | 09/01 ▸ 05/05 | 059145806 | **818828** | 192 172 | ALB |
| 4.0 i W8 | 3B3/7 ; 3B6/7/8 | E | 3999 | BDN,BDP | A | | Left/gauche | 09/01 ▸ 05/05 | 059145805 | **818827** | 215 172 | ALB |

Charge Air Cooler Refroidisseur d'air de suralimentation Ladeluftkühler Intercooler Intercooler Turbo Radyatörü
Intercooler Охладитель всасываемого воздуха töltőlevegő hűtő Intercooler Intercooler Intercooler



• **New** Nouveau **Nuevo** Novo **Nuovo** Nieuw **Neu** Nowość **Yeni** Новый Νέο **Nový**

# VOLKSWAGEN (.../...)

| | | | CC | | AC | | | | OE | Valeo | DIM. | TECH |
|---|---|---|---|---|---|---|---|---|---|---|---|---|
| **PASSAT (2000>2005) (.../...)** | | | | | | | | | | | | |
| 1.9 TDi | 3B3/0/1/2/3 ; 3B6/0 1/2/3 | D | 1896 | AVB,AVF,AWX | M | | | 10/00 ▸ 05/05 | 3B0145805D | | 300 209 | ALB |
| 1.9 TDi | 3B3/0/1/2/3 ; 3B6/0 1/2/3 | D | 1896 | AVB,AVF | A | | | 10/00 ▸ 05/05 | 3B0145805D | | 300 209 | ALB |
| 2.5 TDi,2.5 TDi V6 | 3B3/1/2/3 ; 3B6/1/2 3 | D | 2496 | AKN,BDH | M | | Right/Droite | 10/00 ▸ 05/05 | 059145806 | **818828** | 192 172 | ALB |
| 2.5 TDi,2.5 TDi V6 | 3B3/1/2/3 ; 3B6/1/2 3 | D | 2496 | AKN,BDH | M | | Left/gauche | 10/00 ▸ 05/05 | 059145805 | **818827** | 215 172 | ALB |
| 2.5 TDi,2.5 TDi V6 | 3B3/1/2/3 ; 3B6/1/2 3 | D | 2496 | AKN,BAU | A | | Left/gauche | 10/00 ▸ 05/05 | 059145805 | **818827** | 215 172 | ALB |
| 2.5 TDi,2.5 TDi V6 | 3B3/1/2/3 ; 3B6/1/2 3 | D | 2496 | AKN,BAU | A | | Right/Droite | 10/00 ▸ 05/05 | 059145806 | **818828** | 192 172 | ALB |
| **PASSAT (2005>2010)** | | | | | | | | | | | | |
| 1.4 FSi 16V,1.4 TFSi 16V | 3C2/0/1/2/3 ; 3C5/0 1/2/3 | E | 1390 | CAXA | M | | | 05/07 ▸ 11/10 | 03C145749B | **818838** | 179 116 | ALB |
| 2.0 TDi,2.0 TDi 16V | 3C2/0/1/2/3 ; 3C5/0 1/2/3 | D | 1968 | BKP,BMA,BMR | M | | | 03/05 ▸ | 1K0145805G | **818899** | 617 407 | ALB |
| 2.0 TDi 16V | 3C2/0/1/2/3 ; 3C5/0 1/2/3 | D | 1968 | BKP,BMA,BMR | A | | | 03/05 ▸ 06/10 | 1K0145805G | **818899** | 617 407 | ALB |
| **PASSAT CC** | | | | | | | | | | | | |
| 2.0 TDI,2.0 TDI 16V | 3572 ▸ 3C-9-525 000 | D | 1968 | CBAA/F,CBAB/F,CBBB/F | M | | | 05/08 ▸ 09/08 | 3C0145805P | **818899** | 617 407 | ALB |
| 2.0 TDI,2.0 TDI 16V | 3572 | D | 1968 | CBAA/F,CBAB/F,CBBB/F | A | | | 05/08 ▸ 09/08 | 3C0145805P | **818899** | 617 407 | ALB |
| **PHAETON PHASE I (2002>2007)** | | | | | | | | | | | | |
| 3.0 TDi V6 24V | 3D2/5/6 ; 3D8/5/6 | D | 2967 | BMK | A | | | 09/04 ▸ 05/07 | 3D0145803 | **817634** | 230 217,9 | ALB |
| 3.0 TDi V6 24V | 3D2/5/6 ; 3D8/5/6 | D | 2967 | BMK | A | | | 09/04 ▸ 05/07 | 3D0145804 | **817635** | 230 217,9 | ALB |
| 5.0 TDi V10 | 3D2/5/6 ; 3D8/5/6 | D | 4921 | AJS | A | | | 11/02 ▸ 05/06 | 3D0145804 | **817635** | 230 217,9 | ALB |
| 5.0 TDi V10 | 3D2/5/6 ; 3D8/5/6 | D | 4921 | AJS | A | | | 11/02 ▸ 05/06 | 3D0145803 | **817634** | 230 217,9 | ALB |
| **PHAETON (2007>)** | | | | | | | | | | | | |
| 3.0 TDi V6 24V | 3D3/5/6 ; 3D7/5/6 | D | 2967 | CARA/F | A | | Left/gauche | 06/07 ▸ 10/08 | 3D0145803 | **817634** | 230 217,9 | ALB |
| 3.0 TDi V6 24V | 3D3/5/6 ; 3D7/5/6 | D | 2967 | CARA/F | A | | Right/Droite | 06/07 ▸ 10/08 | 3D0145804 | **817635** | 230 217,9 | ALB |
| **POLO (94>99)** | | | | | | | | | | | | |
| 1.9 TDi | 6V20 ; 6V50 | D | 1896 | AFN,AHU,ALE | M | | | 01/97 ▸ 09/99 | 6K0145805 | **817766** | 295 94,6 | ALB |
| **POLO (99>2001)** | | | | | | | | | | | | |
| 1.4 TDi | 6N2/0/1/2/3 | D | 1422 | AMF | M | | | 10/99 ▸ 09/01 | 6E0145805B | **817486** | 220 133,4 | ALB |
| 1.9 TDi | 6V20 ; 6V50 | D | 1896 | AGR,ALH,ASV | M | | | 10/99 ▸ 09/01 | 6K0145805C | **817767** | 295 95 | ALB |
| **POLO (2001>)** | | | | | | | | | | | | |
| 1.4 TDi | 9N1/0/1/2/3/5 | D | 1422 | AMF,BAY | M | | | 11/01 ▸ 05/05 | 6Q0145804A | **817556** | 183 189 | ALB |
| 1.9 TDi | 9N1/0/1/2/3/5 | D | 1896 | ATD,AXR | M | | | 11/01 ▸ 05/05 | 6Q0145804A | **817556** | 183 189 | ALB |
| 1.9 TDi | 9N1/0/1/2/3 | D | 1896 | ASZ,BLT | M | | | 11/03 ▸ 05/05 | 6Q0145804E | **817558** | 183 189,7 | ALB |
| **POLO (2005>)** | | | | | | | | | | | | |
| 1.8 GTI Turbo 20V | 9N36 | E | 1781 | BJX | M | | | 08/05 ▸ | 6Q0145804A | **817556** | 183 189 | ALB |
| 1.4 TDi | 9N3/0/1/3/5 | D | 1422 | BMS,BNM,BNV,BWB | M | | | 04/05 ▸ | 6Q0145804A | **817556** | 183 189 | ALB |
| 1.9 TDi | 9N3/0/1/3 | D | 1896 | ASZ,BLT | M | | | 04/05 ▸ | 6Q0145804E | **817558** | 183 189,7 | ALB |
| 1.9 TDi | 9N3/0/1/3/5 | D | 1896 | ATD,AXR,BMT | M | | | 04/05 ▸ | 6Q0145804A | **817556** | 183 189 | ALB |
| **SCIROCCO (2008>)** | | | | | | | | | | | | |
| 1.4 TSI 16V | 1372 | E | 1390 | CAVD | M | | | 08/08 ▸ | 1K0145803T | **818898** | 617 407 | ALB |
| 1.4 TSI 16V | 1372 | E | 1390 | CAVD | A | | | 11/08 ▸ | 1K0145803T | **818898** | 617 407 | ALB |
| 2.0 TFSI 16V | 1379 | E | 1984 | CAWB | M | | | 08/08 ▸ | 1K0145803S | **818795** | 617 406 | ALB |
| 2.0 TFSI 16V | 1379 | E | 1984 | CAWB | M | | | 08/08 ▸ | 1K0145803T | **818898** | 617 407 | ALB |
| 2.0 TFSI 16V | 1379 | E | 1984 | CAWB | A | | | 08/08 ▸ | 1K0145803S | **818795** | 617 406 | ALB |
| 2.0 TFSI 16V | 1379 | E | 1984 | CAWB | A | | | 08/08 ▸ | 1K0145803T | **818898** | 617 407 | ALB |
| 2.0 TDI 16V | 1372 | D | 1968 | CBBB/F,CBDB/F | M | | | 09/08 ▸ | 1K0145803Q | **818213** | 617 407 | ALB |
| 2.0 TDI 16V | 1372 | D | 1968 | CBBB/F,CBDB/F | M | | | 09/08 ▸ | 1K0145803F | **818213** | 617 407 | ALB |
| 2.0 TDI 16V | 1372 | D | 1968 | CBDB/F | M | | | 09/08 ▸ | 1K0145803T | **818898** | 617 407 | ALB |
| 2.0 TDI 16V | 1372 | D | 1968 | CBDB/F | A | | | 08/08 ▸ | 1K0145803T | **818898** | 617 407 | ALB |
| 2.0 TDI 16V | 1372 | D | 1968 | CBBB/F,CBDB/F | A | | | 08/08 ▸ | 1K0145803Q | **818213** | 617 407 | ALB |
| 2.0 TDI 16V | 1372 | D | 1968 | CBBB/F,CBDB/F | A | | | 08/08 ▸ | 1K0145803F | **818213** | 617 407 | ALB |
| **SHARAN (95>2000)** | | | | | | | | | | | | |
| 1.8 i Turbo 20V | 7M8/2/3/5/9 | E | 1781 | AJH | M | | C | 11/97 ▸ 02/00 | 7M0145805 | **817936** | 500 67 | ALB |

# VOLKSWAGEN (.../...)

## SHARAN (95>2000) (.../...)

| | | | CC | | AC | | | OE | Valeo | DIM. | TECH |
|---|---|---|---|---|---|---|---|---|---|---|---|
| 1.8 i Turbo 20V | 7M8/2/3/5/9 | E | 1781 | AJH | A | | C | 11/97 ▸ 02/00 | 7M0145805 | **817936** | 500 67 | ALB |
| 1.9 TDi | 7M8/2/3/5/9 | D | 1896 | 1Z,AFN,AHU,ANU,AVG | M | | C | 09/95 ▸ 02/00 | 7M0145805 | **817936** | 500 67 | ALB |
| 1.9 TDi | 7M8/2/3/5/9 | D | 1896 | AFN,AVG | A | | C | 12/96 ▸ 02/00 | 7M0145805 | **817936** | 500 67 | ALB |

## SHARAN (2000>2003)

| | | | | | | | | | | | | |
|---|---|---|---|---|---|---|---|---|---|---|---|---|
| 1.8 i Turbo 20V | 7M9/2/3/5/9 | E | 1781 | AWC | M | | | 04/00 ▸ 05/03 | 7M3145805 | | 570 96 | ALB |
| 1.8 i Turbo 20V | 7M9/2/3/5/9 | E | 1781 | AWC | A | | | 04/00 ▸ 05/03 | 7M3145805 | | 570 96 | ALB |
| 1.9 TDi | 7M9/2/3/5/9 | D | 1896 | ANU,AUY | M | | | 04/00 ▸ 05/03 | 7M3145805 | | 570 96 | ALB |
| 1.9 TDi | 7M9/2/3/5/9 | D | 1896 | AUY | A | | | 10/00 ▸ 05/03 | 7M3145805 | | 570 96 | ALB |

## SHARAN (2003>2010)

| | | | | | | | | | | | | |
|---|---|---|---|---|---|---|---|---|---|---|---|---|
| 1.8 i Turbo 20V | 7M6/0/1/2/3/S/T | E | 1781 | AWC | M | | | 06/03 ▸ 03/10 | 7M3145805 | | 570 96 | ALB |
| 1.8 i Turbo 20V | 7M6/0/1/2/3/S/T | E | 1781 | AWC | A | | | 06/03 ▸ 05/06 | 7M3145805 | | 570 96 | ALB |
| 1.9 TDi | 7M6/0/1/2/3/S/T | D | 1896 | ANU,AUY,BVK | M | | | 06/03 ▸ 03/10 | 7M3145805 | | 570 96 | ALB |
| 1.9 TDi | 7M6/0/1/2/3/S/T | D | 1896 | AUY,BVK | A | | | 06/03 ▸ 03/10 | 7M3145805 | | 570 96 | ALB |

## TIGUAN

| | | | | | | | | | | | | |
|---|---|---|---|---|---|---|---|---|---|---|---|---|
| 1.4 TSi 16V | 5N1/0/1/2 | E | 1390 | BWK | M | | | 11/07 ▸ | 3C0145805P | **818899** | 617 407 | ALB |
| 2.0 TDi 16V | 5N1/0/1/2 | D | 1968 | CBAA/F,CBAB/F,CBBA/F,CBBB/F | M | | | 11/07 ▸ | 3C0145805P | **818899** | 617 407 | ALB |
| 2.0 TDi 16V | 5N1/0/1/2 | D | 1968 | CBAA/F,CBAB/F | A | | | 11/07 ▸ | 3C0145805P | **818899** | 617 407 | ALB |

## TOUAREG (2002>2006)

| | | | | | | | | | | | | |
|---|---|---|---|---|---|---|---|---|---|---|---|---|
| 2.5 TDi | 7LAA | D | 2460 | BAC,BLK | M | | | 01/03 ▸ 11/06 | 7L0145803A | **818814** | 292 287 | ALB |
| 2.5 TDi | 7LAA | D | 2460 | BAC,BLK | A | | | 01/03 ▸ 11/06 | 7L0145803A | **818814** | 292 287 | ALB |
| 5.0 TDi V10 | 7LA/A/E | D | 4921 | AYH,BLE | A | | Left/gauche | 11/02 ▸ 11/06 | 7L0145803A | **818814** | 292 287 | ALB |
| 5.0 TDi V10 | 7LA/A/E | D | 4921 | AYH,BLE | A | | Right/Droite | 11/02 ▸ 11/06 | 7L0145804A | **818815** | 287 292 | ALB |

## TOUAREG II (2006>2010)

| | | | | | | | | | | | | |
|---|---|---|---|---|---|---|---|---|---|---|---|---|
| 5.0 TDi V10 20V | 7L6/0/8 | D | 4921 | BLE | A | | Left/gauche | 12/06 ▸ 05/10 | 7L0145803A | **818814** | 292 287 | ALB |
| 5.0 TDi V10 20V | 7L6/0/8 | D | 4921 | BLE | A | | Right/Droite | 12/06 ▸ 05/10 | 7L0145804A | **818815** | 287 292 | ALB |

## TOURAN (2003>2006)

| | | | | | | | | | | | | |
|---|---|---|---|---|---|---|---|---|---|---|---|---|
| 1.9 TDi | 1T1/B/F/H/T | D | 1896 | AVQ | M | | | 02/03 ▸ | 1K0145803A | **818795** | 617 406 | ALB |
| 1.9 TDi | 1T1/B/F/H/T | D | 1896 | AVQ | M | | | 02/03 ▸ 05/04 | 1K0145803S | **818795** | 617 406 | ALB |
| 1.9 TDi | 1T1/B/F/H/T | D | 1896 | AVQ | M | | | 02/03 ▸ 05/04 | 1K0145803T | **818898** | 617 407 | ALB |
| 1.9 TDi | 1T1/B/F/H/T | D | 1896 | AVQ | M | | | 02/03 ▸ | 1K0145803 | **818795** | 617 406 | ALB |
| 1.9 TDi | 1T1/B/H/T | D | 1896 | BKC | A | | | 08/03 ▸ | 1K0145803 | **818795** | 617 406 | ALB |
| 1.9 TDi | 1T1/B/H/T | D | 1896 | BKC | A | | | 08/03 ▸ | 1K0145803A | **818795** | 617 406 | ALB |
| 1.9 TDi | 1T1/B/H/T | D | 1896 | BKC | A | | | 08/03 ▸ 02/06 | 1K0145803S | **818795** | 617 406 | ALB |
| 1.9 TDi | 1T1/B/H/T | D | 1896 | BKC | A | | | 08/03 ▸ 02/06 | 1K0145803T | **818898** | 617 407 | ALB |
| 2.0 TDi 16V | 1T1/F/H/T | D | 1968 | AZV | M | | | 02/03 ▸ 11/06 | 1K0145803T | **818898** | 617 407 | ALB |
| 2.0 TDi 16V | 1T1/F/H/T | D | 1968 | AZV | M | | | 02/03 ▸ | 1K0145803 | **818795** | 617 406 | ALB |
| 2.0 TDi 16V | 1T1/F/H/T | D | 1968 | AZV | M | | | 02/03 ▸ | 1K0145803A | **818795** | 617 406 | ALB |
| 2.0 TDi 16V | 1T1/F/H/T | D | 1968 | AZV | M | | | 02/03 ▸ 11/06 | 1K0145803S | **818795** | 617 406 | ALB |
| 2.0 TDi 16V | 1T1/H/T | D | 1968 | BKD | A | | | 08/03 ▸ 05/04 | 1K0145803T | **818898** | 617 407 | ALB |
| 2.0 TDi 16V | 1T1/H/T | D | 1968 | BKD | A | | | 08/03 ▸ 05/04 | 1K0145803S | **818795** | 617 406 | ALB |
| 2.0 TDi 16V | 1T1/H/T | D | 1968 | BKD | A | | | 08/03 ▸ | 1K0145803 | **818795** | 617 406 | ALB |
| 2.0 TDi 16V | 1T1/H/T | D | 1968 | BKD | A | | | 08/03 ▸ | 1K0145803A | **818795** | 617 406 | ALB |

## TOURAN (2006>2010)

| | | | | | | | | | | | | |
|---|---|---|---|---|---|---|---|---|---|---|---|---|
| 1.4 TSi | 1T2/A/C/H/T | E | 1390 | BMY | M | | | 11/06 ▸ 11/08 | 1K0145803T | **818898** | 617 407 | ALB |
| 1.4 TSi | 1T2/A/C/H/T | E | 1390 | BLG,BMY | A | | | 11/06 ▸ 05/09 | 1K0145803T | **818898** | 617 407 | ALB |
| 1.9 TDi | 1T2/A/C/H/T | D | 1896 | BLS,BXJ | M | | | 11/06 ▸ 05/10 | 1K0145803Q | **818213** | 617 407 | ALB |
| 1.9 TDi | 1T2/A/C/H/T | D | 1896 | BXE,BXF | M | | | 11/06 ▸ | 1K0145803E | **818795** | 617 406 | ALB |
| 1.9 TDi | 1T2/A/C/H/T | D | 1896 | BXE,BXF | M | | | 11/06 ▸ 05/10 | 1K0145803T | **818898** | 617 407 | ALB |
| 1.9 TDi ▸ 1T-7-150 000 | 1T2/A/C/H/T | D | 1896 | BLS,BXJ | M | | | 11/06 ▸ | 1K0145803F | **818213** | 617 407 | ALB |
| 1.9 TDi ▸ 1T-7-150 000 | 1T2/A/C/H/T | D | 1896 | BLS | A | | | 11/06 ▸ | 1K0145803F | **818213** | 617 407 | ALB |
| 1.9 TDi ▸ 1T-7-150 000 | 1T2/A/C/H/T | D | 1896 | BLS | A | | | 11/06 ▸ 05/10 | 1K0145803Q | **818213** | 617 407 | ALB |
| 2.0 TDi | 1T2/A/H | D | 1968 | BMN | M | | | 11/06 ▸ | 1K0145803B | **818795** | 617 406 | ALB |
| 2.0 TDi | 1T2/A/H/T | D | 1968 | AZV,BKD | M | | | 11/06 ▸ | 1K0145803A | **818795** | 617 406 | ALB |
| 2.0 TDi | 1T2/A/H/T | D | 1968 | AZV,BKD | M | | | 11/06 ▸ 05/10 | 1K0145803S | **818795** | 617 406 | ALB |
| 2.0 TDi | 1T2/A/H/T | D | 1968 | AZV,BKD,BMN | M | | | 11/06 ▸ 05/10 | 1K0145803T | **818898** | 617 407 | ALB |
| 2.0 TDi | 1T2/A/H/T | D | 1968 | BKD,BMN | A | | | 11/06 ▸ 05/10 | 1K0145803T | **818898** | 617 407 | ALB |
| 2.0 TDi | 1T2/A/H | D | 1968 | BMN | A | | | 11/06 ▸ | 1K0145803B | **818795** | 617 406 | ALB |
| 2.0 TDi | 1T2/A/H/T | D | 1968 | BKD | A | | | 11/06 ▸ | 1K0145803A | **818795** | 617 406 | ALB |

Charge Air Cooler Refroidisseur d'air de suralimentation Ladeluftkühler Intercooler Intercooler Turbo Radyatörü
Intercooler Охладитель всасываемого воздуха töltőlevegő hűtő Intercooler Intercooler Intercooler



• **New** Nouveau **Nuevo** Novo **Nuovo** Nieuw **Neu** Nowość **Yeni** Новый Νέο **Nový**

| Type Ctr. | | CC | | | AC | | | OE | Valeo | DIM. | TECH |
|---|---|---|---|---|---|---|---|---|---|---|---|
| | | | | | | | | | | | |
| **VOLKSWAGEN (.../...)** | | | | | | | | | | | |
| **TOURAN (2006>2010) (.../...)** | | | | | | | | | | | |
| 2.0 TDi 1T2/A/H/T | D | 1968 | BKD | A | | | 11/06 ▸ 05/10 | 1K0145803S | **818795** | 617 406 | ALB |
| **VENTO** | | | | | | | | | | | |
| 1.9 TDi 1H2/2/3/4/5/B | D | 1896 | 1Z,AFN,AHU,ALE | M | | | 08/93 ▸ 12/97 | 1H0145805A | **817764** | 176 145 | ALB |
| 1.9 TDi 1H2/2/3/4/B | D | 1896 | 1Z,AFN,AHU | A | | | 09/93 ▸ 12/97 | 1H0145805A | **817764** | 176 145 | ALB |
| **VOLKSWAGEN** | | | | | | | | | | | |
| **CADDY (95>2004)** | | | | | | | | | | | |
| 1.9 TDi 9K9/A/B | D | 1896 | 1Z,AHU,ALE | M | | | 10/96 ▸ 09/00 | 6K0145805 | **817766** | 295 94,6 | ALB |
| 1.9 TDi 9K9/A/B | D | 1896 | ALH | M | | | 09/00 ▸ 06/03 | 6K0145805C | **817767** | 295 95 | ALB |
| **CADDY (2004>2010)** | | | | | | | | | | | |
| 1.9 TDi 2KA/A/B ; 2KB/C/D | D | 1896 | BJB | M | | | 02/04 ▸ 08/10 | 1K0145803S | **818795** | 617 406 | ALB |
| 1.9 TDi 2KA/A ; 2KB/C/D | D | 1896 | BJB | M | | | 02/04 ▸ | 1K0145803 | **818795** | 617 406 | ALB |
| 1.9 TDi 2KA/A/B ; 2KB/C/D | D | 1896 | BJB | M | | | 02/04 ▸ 08/10 | 1K0145803T | **818898** | 617 407 | ALB |
| 1.9 TDi 2KA/A/B ; 2KB/C/D | D | 1896 | BJB | M | | | 02/04 ▸ | 1K0145803A | **818795** | 617 406 | ALB |
| 1.9 TDi 2KA/A/B ; 2KB/C/D | D | 1896 | BLS | M | | | 06/05 ▸ 08/10 | 1K0145803Q | **818213** | 617 407 | ALB |
| 1.9 TDi 2KA/A/B ; 2KB/C/D | D | 1896 | BLS | M | | | 06/05 ▸ | 1K0145803F | **818213** | 617 407 | ALB |
| 1.9 TDi 2KA/A/B ; 2KB/C/D | D | 1896 | BLS | A | | | 06/05 ▸ | 1K0145803F | **818213** | 617 407 | ALB |
| 1.9 TDi 2KA/A/B ; 2KB/C/D | D | 1896 | BLS | A | | | 06/05 ▸ 08/10 | 1K0145803Q | **818213** | 617 407 | ALB |
| **CRAFTER** | | | | | | | | | | | |
| 2.5 TDi 2EA/0/1 ; 2EB/0/1 2ED/0/1 ; 2EH1 ; 2EK1 ; 2EX1 ; 2EY1 ; 2EE/0 1 ; 2FC/0/1 ; 2FF/0/1 ; 2FL1 ; 2FM1 ; 2FG/0 1 ; 2FZ/0/1 | D | 2460 | BJJ,BJK,BJL,BJM | M | | | 04/06 ▸ | 2E0145804 | **818732** | 640 203,8 | ALB |
| **LT II (96>2003)** | | | | | | | | | | | |
| 2.5 TDI 2DA0 ; 2DF0 | D | 2460 | AHD | M | | | 05/96 ▸ 04/97 | 2D0145805D | **816890** | 718 254 | ALB |
| 2.5 TDI 2DA/0/1 ; 2DB/0/1 2DC/0/1 ; 2DD/0/1/2 ; 2DE/0/1 ; 2DF/0/1/2 2DG/0/1/2 ; 2DK1 ; 2DH/1/2 ; 2DL/1/2 ; 2DM 1/2 | D | 2460 | AHD,ANJ,APA | M | | | 05/96 ▸ 05/03 | 2D0145805 | **816890** | 718 254 | ALB |
| 2.5 TDI 2DA/0/1 ; 2DB/0/1 2DC/0/1 ; 2DD/0/1/2 ; 2DE/0/1 ; 2DF/0/1/2 2DG/0/1/2 ; 2DK1 ; 2DH/1/2 ; 2DL/1/2 ; 2DM 1/2 | D | 2461 | AVR,BBE,BBF | M | | | 09/00 ▸ 05/03 | 2D0145805 | **816890** | 718 254 | ALB |
| 2.8 TD 2DA/0/1 ; 2DB/0/1 2DC/0/1 ; 2DD/0/1/2 ; 2DE/0/1 ; 2DF/0/1/2 2DG/0/1/2 ; 2DK1 ; 2DH/1/2 ; 2DL/1/2 ; 2DM 1/2 | D | 2798 | AGK,ATA | M | | | 07/96 ▸ 01/02 | 2D0145805 | **816890** | 718 254 | ALB |
| 2.8 TD 2DD0 ; 2DF0 | D | 2798 | AGK | M | | | 07/96 ▸ 09/98 | 2D0145805D | **816890** | 718 254 | ALB |
| 2.8 TDI 2DA/0/1 ; 2DC/0/1 2DD/0/1/2 ; 2DF/0/1/2 ; 2DG/0/1/2 ; 2DK1 2DH/1/2 ; 2DM1 ; 2DL/1/2 | D | 2799 | AUH | M | | | 02/02 ▸ 05/03 | 2D0145805 | **816890** | 718 254 | ALB |
| **LT III (2003>)** | | | | | | | | | | | |
| 2.5 TDi 2DA/0/1 ; 2DB/0/1 2DC/0/1 ; 2DD/0/1/2 ; 2DE/0/1 ; 2DF/0/1/2 2DG/0/1/2 ; 2DK1 ; 2DH/1/2 ; 2DL/1/2 ; 2DM 1/2 | D | 2460 | ANJ | M | | | 06/03 ▸ 07/06 | 2D0145805 | **816890** | 718 254 | ALB |
| 2.5 TDi 2DA/0/1 ; 2DB/0/1 2DC/0/1 ; 2DD/0/1/2 ; 2DE/0/1 ; 2DF/0/1/2 2DG/0/1/2 ; 2DK1 ; 2DH/1/2 ; 2DL/1/2 ; 2DM 1/2 | D | 2461 | AVR,BBE,BBF | M | | | 06/03 ▸ 07/06 | 2D0145805 | **816890** | 718 254 | ALB |
| 2.8 TDi 2DA/0/1 ; 2DB/0/1 2DC/0/1 ; 2DD/0/1/2 ; 2DE/0/1 ; 2DF/0/1/2 2DG/0/1/2 ; 2DK1 ; 2DH/1/2 ; 2DL/1/2 ; 2DM 1/2 | D | 2799 | AUH,BCQ | M | | | 06/03 ▸ 07/06 | 2D0145805 | **816890** | 718 254 | ALB |
| **TRANSPORTER (F70) (90>96)** | | | | | | | | | | | |
| 2.5 TDI 70A/1 ; 70B/1/K/M/T 70E1 ; 70C/2/3 ; 70H/1/3 ; 70K2 ; 70L1 70M1 ; 70J/1/K/W | D | 2460 | ACV | M | | | 09/95 ▸ 12/95 | 701145805A | **817937** | 239 170 | ALB |
| **TRANSPORTER (F7D) (96>2003)** | | | | | | | | | | | |
| 2.5 TDi 7DA/1 ; 7DB/1/K 7DE1 ; 7DH1 ; 7DC/1/2/3/A/G/M/T/U ; 7DJ/1 K ; 7DL1 ; 7DM1 ; 7DK/2/3/T/W | D | 2460 | ACV | M | | | 01/96 ▸ 06/03 | 701145805A | **817937** | 239 170 | ALB |

# VOLKSWAGEN (.../...)

## TRANSPORTER (F7D) (96>2003) (.../...)

| Type Ctr. | | CC | | AC | | | OE | Valeo | DIM. | TECH |
|---|---|---|---|---|---|---|---|---|---|---|
| 2.5 TDi 7DA/1 ; 7DB/1/K 7DE1 ; 7DH1 ; 7DC/2/M/T/U ; 7DJ/1/K ; 7DL1 7DM1 ; 7DK/2/T | D | 2460 | ACV,AHY | M | | | 05/98 ▸ 06/03 | 7D0145805 | **817372** | 694 414,5 | ALM |
| 2.5 TDi 7DA/1 ; 7DB/1/K 7DE1 ; 7DH1 ; 7DC/1/M/T ; 7DKT ; 7DL1 ; 7DJ 1/K | D | 2460 | ACV | M | | | 05/99 ▸ 06/03 | 7D0145803A | **817372** | 694 414,5 | ALM |
| 2.5 DTi,2.5 TDi 7DA/1 ; 7DB/1/K 7DE1 ; 7DH1 ; 7DC/2/M/T/U ; 7DJ/1/K ; 7DL1 7DM1 ; 7DK/2/T | D | 2460 | ACV | A | | | 01/96 ▸ 04/99 | 701145805A | **817937** | 239 170 | ALB |
| 2.5 TDi 7DB1 ; 7DA/1 ; 7DH1 7DJ1 ; 7DC/2/M/T/U ; 7DK/2/T | D | 2461 | AXG | M | | | 09/00 ▸ 06/03 | 7D0145805 | **817372** | 694 414,5 | ALM |

## TRANSPORTER (7J/7H)(2003>2009)

| | | | | | | | | | | | |
|---|---|---|---|---|---|---|---|---|---|---|---|
| 1.9 TDI 7HA/1 ; 7HB/1/S/X 7HC/T/W ; 7HH1 ; 7HF/D/E ; 7HJ/1/S/X 7JD1 ; 7JE1 ; 7JL1 ; 7JZ1 ; 7HM/B/C/H | D | 1896 | AXB,AXC,BRR,BRS | M | | | 04/03 ▸ 11/09 | 7H0145804B | **•818272** | | |
| 2.5 TDI 7HA/1 ; 7HB/1/M/S/X 7HC/T/W ; 7HH1 ; 7HF/D/E ; 7HJ/1/S/X 7JD1 ; 7JE1 ; 7JL1 ; 7JY1 ; 7JZ1 ; 7HM/B/C H/Y | D | 2460 | AXD,AXE,BLJ,BNZ,BPC | M | | | 04/03 ▸ 11/09 | 7H0145804B | **•818272** | | |
| 2.5 TDI 7HA/1 ; 7HB/1/S/X 7HC/T/W ; 7HH1 ; 7HF/D/E ; 7HJ/1/S/X 7JD1 ; 7JE1 ; 7JL1 ; 7JY1 ; 7JZ1 ; 7HM/B/C H/Y | D | 2460 | AXD,AXE,BNZ,BPC | A | | | 04/03 ▸ 11/09 | 7H0145804B | **•818272** | | |

## TRANSPORTER (7E/7F) (2009>)

| | | | | | | | | | | | |
|---|---|---|---|---|---|---|---|---|---|---|---|
| 2.0 TDI 102 16V 7EA/1 ; 7EB/1/S/X 2.0 TDI 140 16V,2.0 TDI 84 16V 7EH1 ; 7EF/D/E 7EJ/1/S/X ; 7ENC ; 7FD1 ; 7FE1 ; 7EM/C/H/P 7FY1 ; 7FL/0/1 | D | 1968 | CAAA/F,CAAB/F,CAAC/F | M | | | 09/09 ▸ | 7H0145804B | **•818272** | | |
| 2.0 TDI 140 16V 7EA/1 ; 7EB/1/S/X 7EH1 ; 7EF/D/E ; 7EJ/1/S/X ; 7ENC ; 7FD1 7FE1 ; 7FL1 ; 7FY1 ; 7EM/C/H | D | 1968 | CAAC/F | A | | | 09/09 ▸ | 7H0145804B | **•818272** | | |

# VOLVO

## C30

| | | | | | | | | | | | |
|---|---|---|---|---|---|---|---|---|---|---|---|
| 2.4 i 20V | E | 2521 | B5254T3 | M | +/- | | 10/06 ▸ 03/07 | 30741046 | | 601 143 | ALB |
| 2.4 i 20V | E | 2521 | B5254T3 | A | +/- | | 10/06 ▸ 03/07 | 30741046 | | 601 143 | ALB |
| 1.6 D Turbo 16V ▸ 142833 | D | 1560 | D4164T | M | | | 10/06 ▸ | 30741046 | | 601 143 | ALB |
| 2.0 D Turbo 16V | D | 1998 | D4204T | M | | | 10/06 ▸ | 30741046 | | 601 143 | ALB |

## S40 (2004>)

| | | | | | | | | | | | |
|---|---|---|---|---|---|---|---|---|---|---|---|
| 1.6 D 16V | D | 1560 | D4164T | M | | | 01/05 ▸ | 30741046 | | 601 143 | ALB |
| 2.0 D 16V | D | 1998 | D4204T | M | | | 03/04 ▸ | 30680124 | | 601 143 | ALB |

## V50

| | | | | | | | | | | | |
|---|---|---|---|---|---|---|---|---|---|---|---|
| 1.6 D 16V MW7652 | D | 1560 | D4164T | M | | | 01/05 ▸ | 30741046 | | 601 143 | ALB |
| 2.0 D 16V MW7551 | D | 1998 | D4204T | M | | | 03/04 ▸ 12/05 | 30680124 | | 601 143 | ALB |
| 2.0 D 16V MW7551 ; MW7552 | D | 1998 | D4204T | M | | | 03/04 ▸ | 30741046 | | 601 143 | ALB |

## C70 CC (2006>)

| | | | | | | | | | | | |
|---|---|---|---|---|---|---|---|---|---|---|---|
| 2.0 D 16V | D | 1998 | D4204T | M | | | 01/07 ▸ | 30741046 | | 601 143 | ALB |

Charge Air Cooler Refroidisseur d'air de suralimentation Ladeluftkühler Intercooler Intercooler Turbo Radyatörü
Intercooler Охладитель всасываемого воздуха töltőlevegő hűtő Intercooler Intercooler Intercooler



• **New** Nouveau **Nuevo** Novo **Nuovo** Nieuw **Neu** Nowość **Yeni** Новый Νέο **Novy**

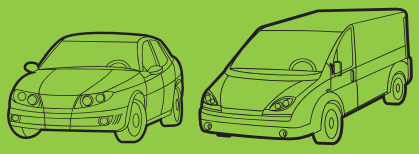

Valeo

Pour / For

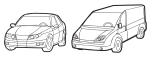


| | | | |
|---|---|---|---|
| AUDI | 602 | NISSAN | 607 |
| BMW | 603 | PEUGEOT | 607 |
| CITROEN | 604 | RENAULT | 610 |
| FIAT | 606 | SEAT | 611 |
| FORD | 607 | SKODA | 612 |
| LANCIA | 607 | VOLKSWAGEN | 612 |
| MERCEDES | 607 | | |


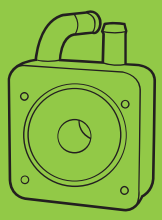

Oil Cooler
Refroidisseur d'huile
Ölkühler
Radiatore olio
Olie Koeler
Yağ soğutucu
Refrigerador de aceite
Масляный охладитель
olajhűtő
Olejový chladič
Răcitor Ulei
Ψυγείο Λαδιού

| | | CC | | AC | | | OE | Valeo | DIM. | TECH |
|---|---|---|---|---|---|---|---|---|---|---|
| **AUDI** | | | | | | | | | | |
| **80 (81>86)** | | | | | | | | | | |
| 1.8 i 811/0/1/5/L ; 813/0/5/G/L ; 814/0/5 | E | 1781 | DZ,MU,PV | M | | | 01/83 ▸ 03/87 | 068117021B | **817943** | 94 94 |
| 1.6 D,1.6 TD 811/0/1/2 ; 813/0/1 2/3 ; 814/0/1/2 | D | 1588 | CY,JK | M | | | 02/82 ▸ 03/87 | 068117021B | **817943** | 94 94 |
| 1.6 D 811/0/1/2 ; 813/0/1/2 | D | 1588 | CR,JK | A | | | 08/81 ▸ 03/87 | 068117021B | **817943** | 94 94 |
| **80 (86>91)** | | | | | | | | | | |
| 1.6 i 8A20 | E | 1595 | ABB | M | | | 08/90 ▸ 08/91 | 068117021B | **817943** | 94 94 |
| 1.6 i 8A20 | E | 1595 | ABB | A | | | 08/90 ▸ 08/91 | 068117021B | **817943** | 94 94 |
| 1.8 i 8940 ; 8A20 ; 893/0 | E | 1781 | DZ | M | | | 09/86 ▸ 09/91 | 068117021B | **817943** | 94 94 |
| 1.9 i 8948 ; 893/0/1 | E | 1857 | SD | M | | | 08/86 ▸ 07/89 | 068117021B | **817943** | 94 94 |
| 1.9 i 893/0/1 ; 894/1/8 | E | 1857 | SD | A | | | 08/86 ▸ 07/89 | 068117021B | **817943** | 94 94 |
| 2.0 i,2.0 i 16V 8948 ; 8A20 ; 893/0 1/8 | E | 1984 | 3A,6A,AAD | M | | | 08/88 ▸ 09/91 | 068117021B | **817943** | 94 94 |
| 2.0 i 8A20 ; 893/0/1/8 | E | 1984 | 3A,AAD | A | | | 08/88 ▸ 08/91 | 068117021B | **817943** | 94 94 |
| 1.6 TD 8940 ; 8A20 ; 893/0 | D | 1588 | RA,SB | M | | | 04/88 ▸ 08/91 | 893117021 | | 150 153,7 CBL |
| 1.9 D 8A20 | D | 1896 | 1Y | M | | | 08/89 ▸ 08/91 | 068117021B | **817943** | 94 94 |
| **80 (91>95)** | | | | | | | | | | |
| 1.6 i 8C20 ; 8C50 | E | 1595 | ABB,ADA | M | | | 03/92 ▸ 07/95 | 068117021B | **817943** | 94 94 |
| 2.0 E 8C20 ; 8C50 ▸ S-026 713 | E | 1984 | ABK | M | | | 09/91 ▸ 08/94 | 068117021B | **817943** | 94 94 |
| 2.0 E 8C20 ; 8C50 ▸ S-026 713 | E | 1984 | ABK | A | | | 09/91 ▸ 08/94 | 068117021B | **817943** | 94 94 |
| 2.6 E V6 8C27 ; 8C57 | E | 2598 | ABC,ACZ | M | | | 07/92 ▸ 07/95 | 068117021B | **817943** | 94 94 |
| 2.6 E V6 8C27 ; 8C57 ▸ S-026 713 | E | 2598 | ABC,ACZ | A | | | 08/92 ▸ 07/95 | 068117021B | **817943** | 94 94 |
| 2.8 i V6 8C27 ; 8C57 | E | 2771 | AAH | M | | | 09/91 ▸ 07/95 | 068117021B | **817943** | 94 94 |
| 2.8 i V6 8C27 ; 8C57 ▸ S-026 713 | E | 2771 | AAH | A | | | 09/91 ▸ 07/95 | 068117021B | **817943** | 94 94 |
| 1.9 TD 8C20 ; 8C50 | D | 1896 | AAZ | M | | | 09/91 ▸ 07/95 | 893117021 | | 150 153,7 CBL |
| 1.9 TD,1.9 TDi 8C20 ; 8C50 | D | 1896 | 1Z,AAZ | M | | | 09/91 ▸ 07/95 | 068117021B | **817943** | 94 94 |
| 1.9 TD 8C20 | D | 1896 | AAZ | A | | | 09/91 ▸ 06/93 | 893117021 | | 150 153,7 CBL |
| 1.9 TD,1.9 TDi 8C20 ; 8C50 | D | 1896 | 1Z,AAZ | A | | | 09/91 ▸ 07/95 | 068117021B | **817943** | 94 94 |
| **90 (87>91)** | | | | | | | | | | |
| 1.8 i 8940 ; 8A27 | E | 1781 | DZ | M | | | 01/88 ▸ 12/91 | 068117021B | **817943** | 94 94 |
| 1.6 TD 8937 ; 8A27 | D | 1588 | RA,SB | M | | | 04/88 ▸ 1992 | 893117021 | | 150 153,7 CBL |
| **100 (82>90)** | | | | | | | | | | |
| 1.8,1.8 i 443/0/1/2/3/6/C/G/J K/P ; 445/0/2/6/G/J/K/P | E | 1781 | JW,NP,PH,SH | M | | | 03/83 ▸ 12/90 | 068117021B | **817943** | 94 94 |
| 1.8,1.8 i 443/G/J/K/P ; 445/G J/K/P | E | 1781 | JW,PH,SH | A | | | 04/85 ▸ 12/90 | 068117021B | **817943** | 94 94 |
| **100 (90>94)** | | | | | | | | | | |
| 1.6 i 4A20 ; 4A50 | E | 1595 | ABB | M | | | 03/92 ▸ 06/93 | 068117021B | **817943** | 94 94 |
| 2.0 16V,2.0 i,2.0 i 16V 4A20 ; 4A50 | E | 1984 | AAD,AAE,ABK,ACE | M | | | 12/90 ▸ 07/94 | 068117021B | **817943** | 94 94 |
| 2.0 i 4A20 ; 4A50 | E | 1984 | AAD,AAE,ABK | A | | | 12/90 ▸ 07/94 | 068117021B | **817943** | 94 94 |
| 2.6 V6,2.6 i V6 4A2/0/7 ; 4A5/0/7 | E | 2598 | ABC,ACZ | M | | | 03/92 ▸ 07/94 | 068117021B | **817943** | 94 94 |
| 2.6 V6,2.6 i V6 4A2/0/7 ; 4A5/0/7 | E | 2598 | ABC,ACZ | A | | | 04/92 ▸ 07/94 | 068117021B | **817943** | 94 94 |
| 2.8 i V6 4A50 ; 4A2/0/7 | E | 2771 | AAH | M | | | 12/90 ▸ 07/94 | 068117021B | **817943** | 94 94 |
| 2.8 i V6 4A20 ; 4A50 | E | 2771 | AAH | A | | | 12/90 ▸ 07/94 | 068117021B | **817943** | 94 94 |
| 2.5 TDi 4A20 ; 4A50 | D | 2460 | AAT | M | | | 08/91 ▸ 07/94 | 068117021B | **817943** | 94 94 |
| 2.5 TDi 4A20 ; 4A50 | D | 2460 | AAT | A | | | 01/93 ▸ 07/94 | 068117021B | **817943** | 94 94 |
| **A3 (96>2003)** | | | | | | | | | | |
| 1.9 TDi 8L1/0/A/B/C/H | D | 1896 | AGR,ALH | M | | | 09/96 ▸ 06/01 | 068117021B | **817943** | 94 94 |
| 1.9 TDi 8L1/0/A/B/C/H | D | 1896 | AGR,ALH | A | | | 09/96 ▸ 06/01 | 068117021B | **817943** | 94 94 |
| **A4 (94>98)** | | | | | | | | | | |
| 1.8 i 20V,1.8 i Turbo 20V 8D2/0/H/S/T ; 8D5/0 H/S | E | 1781 | ADR,AEB,AFY,AJL,APU,ARG,ARK | M | | | 11/94 ▸ 12/98 | 068117021B | **817943** | 94 94 |
| 1.8 i 20V,1.8 i Turbo 20V 8D2/0/H/S ; 8D5/0/H S | E | 1781 | ADR,AEB,AFY,APU,ARG,ARK | A | | | 11/94 ▸ 12/98 | 068117021B | **817943** | 94 94 |
| 1.9 TDi 8D2/0/H ; 8D5/0/H | D | 1896 | 1Z,AFF,AHU | M | | | 11/94 ▸ 12/98 | 068117021B | **817943** | 94 94 |
| 1.9 TDi 8D2/0/H ; 8D5/0/H | D | 1896 | 1Z,AHU | A | | | 01/95 ▸ 12/98 | 068117021B | **817943** | 94 94 |
| **A4 (99>2001)** | | | | | | | | | | |
| 1.8 i 20V,1.8 i Turbo 20V 8D2/0/S/T ; 8D5/0/S | E | 1781 | ADR,AFY,AJL,ANB,APT,APU,ARG | M | | | 01/99 ▸ 11/00 | 068117021B | **817943** | 94 94 |

Oil Cooler Refroidisseur d'huile Ölkühler Radiatore olio Olie Koeler Yağ soğutucu Refrigerador de aceite
Масляный охладитель olajhűtő Olejový chladič Răcitor Ulei Ψυγείο Λαδιού



• **New** Nouveau **Nuevo** Novo **Nuovo** Nieuw **Neu** Nowość **Yeni** Новый Νέο **Novy**

| Type Ctr. | | CC | | AC | | | OE | Valeo | DIM. | TECH |
|---|---|---|---|---|---|---|---|---|---|---|
| **AUDI (.../...)** | | | | | | | | | | |
| **A4 (99>2001) (.../...)** | | | | | | | | | | |
| 1.8 i 20V,1.8 i Turbo 20V 8D2/0/S ; 8D5/0/S | E | 1781 | ADR,AFY,ANB,APT,APU,ARG | A | | | 01/99 ▸ 11/00 | 068117021B | **817943** | 94 94 |
| 1.9 TDi 8D20 ; 8D50 | D | 1896 | AHH,AHU | M | | | 02/99 ▸ 11/00 | 068117021B | **817943** | 94 94 |
| 8D-X-200 001 ▸ | | | | | | | | | | |
| 1.9 TDi 8D20 ; 8D50 | D | 1896 | AHU | A | | | 02/99 ▸ 11/00 | 068117021B | **817943** | 94 94 |
| **A6 (94>97)** | | | | | | | | | | |
| 1.8 E 20V,1.8 i 20V 4A2/0/H ; 4A5/0/H | E | 1781 | ADR | M | | | 07/95 ▸ 09/97 | 068117021B | **817943** | 94 94 |
| 1.8 E 20V 4A2/0/H ; 4A5/0/H | E | 1781 | ADR | A | | | 07/95 ▸ 09/97 | 068117021B | **817943** | 94 94 |
| 2.0 E 4A20 ; 4A50 | E | 1984 | ABK,ADW | A | | | 07/94 ▸ 09/97 | 068117021B | **817943** | 94 94 |
| 2.0 E,2.0 E 16V,2.0 i 2.0 i 16V 4A20 ; 4A50 | E | 1984 | AAE,ABK,ACE,ADW | M | | | 07/94 ▸ 09/97 | 068117021B | **817943** | 94 94 |
| ▸ S-026 713 | | | | | | | | | | |
| 2.8 i V6 4A20 ; 4A50 | E | 2771 | AAH | M | | | 07/94 ▸ 08/94 | 068117021B | **817943** | 94 94 |
| ▸ S-026 713 | | | | | | | | | | |
| 2.8 i V6 4A20 ; 4A50 | E | 2771 | AAH | A | | | 07/94 ▸ 08/94 | 068117021B | **817943** | 94 94 |
| ▸ S-026 713 | | | | | | | | | | |
| 1.9 TDi 4A20 ; 4A50 | D | 1896 | 1Z,AHU | M | | | 07/94 ▸ 09/97 | 068117021B | **817943** | 94 94 |
| 1.9 TDi 4A20 ; 4A50 | D | 1896 | 1Z,AHU | A | | | 07/94 ▸ 09/97 | 068117021B | **817943** | 94 94 |
| 2.5 TDi 4A50 ; 4A2/0/H | D | 2460 | AAT,AEL | M | | | 07/94 ▸ 09/97 | 068117021B | **817943** | 94 94 |
| 2.5 TDi 4A50 ; 4A2/0/H | D | 2460 | AAT,AEL | A | | | 07/94 ▸ 09/97 | 068117021B | **817943** | 94 94 |
| **A6 (97>2001)** | | | | | | | | | | |
| 1.8 i Turbo 20V 4B2/0/H ; 4B5/0/H | E | 1781 | AJL,ANB,APU,ARK | M | | | 11/97 ▸ 05/01 | 068117021B | **817943** | 94 94 |
| **A8 (94>2002)** | | | | | | | | | | |
| 2.8 i V6 4D2G | E | 2771 | AAH | M | | | 06/94 ▸ 08/94 | 068117021B | **817943** | 94 94 |
| ▸ S-026 713 | | | | | | | | | | |
| 2.8 i V6 4D2G | E | 2771 | AAH | A | | | 06/94 ▸ 08/94 | 068117021B | **817943** | 94 94 |
| **CABRIOLET** | | | | | | | | | | |
| 1.8 E 20V 8G70 | E | 1781 | ADR | M | | | 04/97 ▸ 08/00 | 068117021B | **817943** | 94 94 |
| 1.8 E 20V 8G70 | E | 1781 | ADR | A | | | 04/97 ▸ 08/00 | 068117021B | **817943** | 94 94 |
| 2.0 E 8G70 | E | 1984 | ABK | M | | | 01/93 ▸ 09/98 | 068117021B | **817943** | 94 94 |
| ▸ S-026 713 | | | | | | | | | | |
| 2.6 E V6 8G70 | E | 2598 | ABC | M | | | 01/94 ▸ 09/94 | 068117021B | **817943** | 94 94 |
| ▸ 8G-S-001 302, S-026 713 | | | | | | | | | | |
| 2.6 E V6 8G70 | E | 2598 | ABC | A | | | 01/94 ▸ 08/94 | 068117021B | **817943** | 94 94 |
| ▸ S-026 713 | | | | | | | | | | |
| 2.8 i V6 8G70 | E | 2771 | AAH | M | | | 11/92 ▸ 09/94 | 068117021B | **817943** | 94 94 |
| ▸ 8G-S-001 302, S-026 713 | | | | | | | | | | |
| 2.8 i V6 8G70 | E | 2771 | AAH | A | | | 01/93 ▸ 08/94 | 068117021B | **817943** | 94 94 |
| ▸ S-026 713 | | | | | | | | | | |
| 1.9 TDi 8G70 | D | 1896 | 1Z,AHU | M | | | 07/95 ▸ 08/00 | 068117021B | **817943** | 94 94 |
| **COUPÉ (80>88)** | | | | | | | | | | |
| 1.8 i 8553 ; 8563 | E | 1781 | DZ | M | | | 08/86 ▸ 07/88 | 068117021B | **817943** | 94 94 |
| **COUPÉ (88>96)** | | | | | | | | | | |
| 1.8 E 8B30 | E | 1781 | DZ | M | | | 08/89 ▸ 07/91 | 068117021B | **817943** | 94 94 |
| 2.0 E,2.0 E 16V,2.0 i 2.0 i 16V 8B30 | E | 1984 | 3A,6A,AAD,ABK,ACE | M | | | 08/89 ▸ 08/94 | 068117021B | **817943** | 94 94 |
| 2.0 E,2.0 i 8B30 | E | 1984 | 3A,AAD,ABK | A | | | 08/89 ▸ 08/94 | 068117021B | **817943** | 94 94 |
| ▸ S-026 713 | | | | | | | | | | |
| 2.6 E V6 8B30 | E | 2598 | ABC | A | | | 08/92 ▸ 08/94 | 068117021B | **817943** | 94 94 |
| 2.6 E V6 8B30 | E | 2598 | ABC | M | | | 08/92 ▸ 08/94 | 068117021B | **817943** | 94 94 |
| ▸ S-026 713 | | | | | | | | | | |
| 2.8 i V6 8B30 | E | 2771 | AAH | M | | | 08/91 ▸ 08/94 | 068117021B | **817943** | 94 94 |
| ▸ S-026 713 | | | | | | | | | | |
| 2.8 i V6 8B30 | E | 2771 | AAH | A | | | 09/91 ▸ 08/94 | 068117021B | **817943** | 94 94 |
| **BMW** | | | | | | | | | | |
| **3 SERIES E36** | | | | | | | | | | |
| 323i CE/81/82 | E | 2494 | M52B25 | A | | | 07/96 ▸ 09/99 | 17212244083 | | 475 67 CBL |
| 328i CF/21/22 | E | 2793 | M52B28 | A | | | 02/95 ▸ 09/99 | 17212244083 | | 475 67 CBL |
| 325td CC/11/12 | D | 2497 | M51A | M | | | 08/91 ▸ 02/98 | 17212244083 | | 475 67 CBL |
| 325td CC/21/22 | D | 2497 | M51A | A | | | 08/91 ▸ 02/98 | 17212244083 | | 475 67 CBL |
| **M3 E36** | | | | | | | | | | |
| 3.0 i BF/91/92/99 ; BJ/91/92 | E | 2990 | S50B/30/30GT | M | | | 06/92 ▸ | 17212244083 | | 475 67 CBL |

| Type Ctr. | | CC | | AC | | | OE | Valeo | DIM. | TECH |
|---|---|---|---|---|---|---|---|---|---|---|
| **BMW (.../...)** | | | | | | | | | | |
| **M3 E36 (.../...)** | | | | | | | | | | |
| 3.2 i BG91 ; BK91 | E | 3201 | S50B32 | M | | | 10/95 ▸ | 17212244083 | 475 67 | CBL |
| **Z3** | | | | | | | | | | |
| 3.2 i CK/91/92 ; CM/91/92 | E | 3201 | S50B32 | M | | | 06/96 ▸ 11/01 | 17212244083 | 475 67 | CBL |
| 3.2 i CN/91/92 | E | 3246 | S54B32-325 | M | | | 04/01 ▸ 11/01 | 17212244083 | 475 67 | CBL |
| **CITROEN** | | | | | | | | | | |
| **2 CV** | | | | | | | | | | |
| 602 AK-/A/AK/B ; AZ-/KA/KA4/KAA | E | 602 | A06,M28,M4 | | | | 01/63 ▸ 08/90 | 5440576 | •816597 | 156 72 | ALB |
| **AMI 6** | | | | | | | | | | |
| 0.6 AM2 ; AM/ ; AMB//2 | E | 602 | M28,M4 | M | | | 04/61 ▸ 07/69 | 5440576 | •816597 | 156 72 | ALB |
| **AMI 8** | | | | | | | | | | |
| 0.6 AM-/JA/JB/JC | E | 602 | M28 | M | | | 03/69 ▸ 07/78 | 5440576 | •816597 | 156 72 | ALB |
| **C4** | | | | | | | | | | |
| 2.0 i 16V LARFNC ; LCRFNC | E | 1997 | EW10J4 | M | | | 11/04 ▸ 08/05 | 1103N0 | 817705 | 96,6 96,6 | ALB |
| 2.0 i 16V LARFKC | E | 1997 | EW10J4S | M | | | 11/04 ▸ 01/11 | 1103N5 | 817643 | 96,6 96,6 | ALB |
| 2.0 HDi LDRHZ | D | 1997 | DW10ATED | M | | | 02/07 ▸ 12/10 | 1103N1 | 817704 | 96,6 96,6 | ALB |
| **C5 (2001>2004)** | | | | | | | | | | |
| 1.8 i 16V DC6FZE | E | 1749 | EW7J4 | A | | | 02/01 ▸ 08/04 | 227556 | •818888 | 94,7 97,3 | |
| 2.0 i 16V DCR/FNB/FNC ; DER FNB/FNC | E | 1997 | EW10J4 | M | | | 02/01 ▸ 08/04 | 1103N1 | 817704 | 96,6 96,6 | ALB |
| 2.0 i 16V DCR/FNB/FNC ; DER FNB/FNC 9550 ▸ | E | 1997 | EW10J4 | M | | | 01/03 ▸ 08/04 | 1103N0 | 817705 | 96,6 96,6 | ALB |
| 2.0 i 16V DCR/FNE/FNF ; DER FNE/FNF | E | 1997 | EW10J4 | A | | | 02/01 ▸ 08/04 | 227555 | •818889 | 94,7 97,3 | |
| 2.0 i 16V DCR/FNE/FNF ; DER FNE/FNF | E | 1997 | EW10J4 | A | | | 02/01 ▸ 08/04 | 1103N1 | 817704 | 96,6 96,6 | ALB |
| 2.0 i 16V DCR/FNE/FNF ; DER FNE/FNF 9550 ▸ | E | 1997 | EW10J4 | A | | | 01/03 ▸ 08/04 | 1103N0 | 817705 | 96,6 96,6 | ALB |
| 2.0 HDi DCR/HYB/HZB ; DER HSB/HYB/HZB | D | 1997 | DW10ATED,DW10TD | M | | | 02/01 ▸ 08/04 | 1103N1 | 817704 | 96,6 96,6 | ALB |
| 2.0 HDi DCR/HZE/HZF ; DER HZE/HZF | D | 1997 | DW10ATED | A | | | 02/01 ▸ 08/04 | 227554 | •818890 | 94,7 94,7 | |
| 2.0 HDi DCR/HZE/HZF ; DER HZE/HZF | D | 1997 | DW10ATED | A | | | 02/01 ▸ 08/04 | 1103N1 | 817704 | 96,6 96,6 | ALB |
| 2.2 HDi 16V DC4HXB ; DE4HXB | D | 2179 | DW12TED4 | M | | | 02/01 ▸ 08/04 | 1103N1 | 817704 | 96,6 96,6 | ALB |
| 2.2 HDi 16V DC4/HXE ; DE4/HXE HXF | D | 2179 | DW12TED4 | A | | | 02/01 ▸ 08/04 | 1103N1 | 817704 | 96,6 96,6 | ALB |
| **C5 (2004>2007)** | | | | | | | | | | |
| 2.0 i 16V RCRFJF ; RERFJF | E | 1997 | EW10A | A | | | 09/04 ▸ | 227555 | •818889 | 94,7 97,3 | |
| 2.2 HDi 16V RC4HXE ; RE4HXE | D | 2179 | DW12TED4 | A | | | 09/04 ▸ 12/05 | 1103N1 | 817704 | 96,6 96,6 | ALB |
| **C5 (2008>)** | | | | | | | | | | |
| 2.0 i 16V RDRFJF ; RWRFJF | E | 1997 | EW10A | A | | | 03/08 ▸ | 227554 | •818890 | 94,7 94,7 | |
| **C8** | | | | | | | | | | |
| 2.0 i 16V EBRFNF | E | 1997 | EW10J4 | A | | | 06/02 ▸ 10/05 | 227554 | •818890 | 94,7 94,7 | |
| 2.2 i 16V EA3FZC ; EB3FZC | E | 2230 | EW12J4 | M | | | 06/02 ▸ 09/05 | 1103N1 | 817704 | 96,6 96,6 | ALB |
| 2.0 HDi 16V EARHTB ; EBRHTB | D | 1997 | DW10ATED4 | M | | | 06/02 ▸ 07/06 | 1103N1 | 817704 | 96,6 96,6 | ALB |
| 2.0 HDi 16V EAR/HME ; EBR/HME HWB | D | 1997 | DW10ATED4 | A | | | 06/02 ▸ 10/06 | 1103N1 | 817704 | 96,6 96,6 | ALB |
| 2.0 HDi 16V EAR/HME ; EBR/HME HWB | D | 1997 | DW10ATED4 | A | | | 06/02 ▸ 10/06 | 227554 | •818890 | 94,7 94,7 | |
| 2.2 HDi 16V EA4/HWB/HWG ; EB4 HWB/HWG | D | 2179 | DW12TED4 | M | | | 06/02 ▸ 06/06 | 1103N1 | 817704 | 96,6 96,6 | ALB |
| **DYANE** | | | | | | | | | | |
| 0.6 AYA3-A ; AYB ; AY-/CB | E | 602 | M28 | M | | | 01/68 ▸ 07/83 | 5440576 | •816597 | 156 72 | ALB |
| **EVASION (98>2002)** | | | | | | | | | | |
| 2.0 HDi,2.0 HDi 16V AFR/HWB/HZA | D | 1997 | DW10ATED,DW10ATED4 | M | | | 08/99 ▸ 05/02 | 1103N1 | 817704 | 96,6 96,6 | ALB |

Oil Cooler Refroidisseur d'huile Ölkühler Radiatore olio Olie Koeler Yağ soğutucu Refrigerador de aceite
Масляный охладитель olajhűtő Olejový chladič Răcitor Ulei Ψυγείο Λαδιού



• **New** Nouveau **Nuevo** Novo **Nuovo** Nieuw **Neu** Nowość **Yeni** Новый Νέο **Novy**

| Type Ctr. | | CC | | AC | | | OE | Valeo | DIM. | TECH |
|---|---|---|---|---|---|---|---|---|---|---|
| **CITROEN (.../...)** | | | | | | | | | | |
| **MEHARI** | | | | | | | | | | |
| 0.6 AYCE | E | 602 | A06,M28 | M | | | 09/68 ▸ 07/87 | 5440576 | •816597 | 156 72 | ALB |
| **XANTIA (97>2002)** | | | | | | | | | | |
| 2.0 HDi X1R/HYF/HZB HZF ; X7RHZF ; X2R/HYE/HYF/HZF | D | 1997 | DW10ATED,DW10TD | M | | | 10/98 ▸ 05/02 | 1103N1 | 817704 | 96,6 96,6 | ALB |
| **XM (89>94)** | | | | | | | | | | |
| 2.0,2.0 i,2.0 i Turbo CT Y3A/A/B/C/H/J/P/R/X Y/Z | E | 1998 | XU102C,XU10J2,XU10J2TE,XU10M | M | | | 05/89 ▸ 06/94 | 96101414 | | 150 190 | ALB |
| 2.0 i,2.0 i Turbo CT Y3A/CA/HA/RA/XA/YA | E | 1998 | XU10J2,XU10J2TE | A | | | 01/90 ▸ 06/94 | 96101414 | | 150 190 | ALB |
| 3.0 i V6,3.0 i V6 24V Y3C/M/N/U | E | 2963 | ZPJ,ZPJ4 | M | | | 05/93 ▸ 06/94 | 96101414 | | 150 190 | ALB |
| 3.0 i V6 Y3CNA | E | 2963 | ZPJ | A | | | 07/93 ▸ 06/94 | 96101414 | | 150 190 | ALB |
| 3.0 i V6,3.0 i V6 24V Y3A/D/G/L/W | E | 2975 | ZPJ,ZPJ4 | M | | | 05/89 ▸ 06/94 | 96101414 | | 150 190 | ALB |
| 3.0 i V6 Y3A/GA/WA | E | 2975 | ZPJ | A | | | 05/90 ▸ 06/94 | 96101414 | | 150 190 | ALB |
| **XM (94>2001)** | | | | | | | | | | |
| 2.0 i Turbo CT Y4G/G/M | E | 1998 | XU10J2TE | M | | | 07/94 ▸ 07/01 | 96101414 | | 150 190 | ALB |
| 2.0 i 16V,2.0 i Turbo CT Y4T/S/T/U | E | 1998 | XU10J2TE,XU10J4R | A | | | 07/94 ▸ 07/01 | 96101414 | | 150 190 | ALB |
| 3.0 i V6,3.0 i V6 24V Y4G/N/R/U | E | 2963 | ZPJ,ZPJ4 | M | | | 07/94 ▸ 06/97 | 96101414 | | 150 190 | ALB |
| 3.0 i V6 Y4T/N/R | E | 2963 | ZPJ | A | | | 07/94 ▸ 06/97 | 96101414 | | 150 190 | ALB |
| **XSARA (97>2000)** | | | | | | | | | | |
| 2.0 HDi N1RHYF ; N2RHYF ; N6RHYF ; N0R HYF | D | 1997 | DW10TD | M | | | 03/99 ▸ 08/00 | 1103N1 | 817704 | 96,6 96,6 | ALB |
| **XSARA (2000>)** | | | | | | | | | | |
| 2.0 HDi N0R/HYB/HZB ; N1R HYB/HZB ; N6RHYB ; N2R/HYB/HZB | D | 1997 | DW10ATED,DW10TD | M | | | 09/00 ▸ 08/05 | 1103N1 | 817704 | 96,6 96,6 | ALB |
| 2.0 HDi N1RHZN ; N2RHZN ; N0R HZN | D | 1997 | DW10ATED | A | | | 08/01 ▸ 08/05 | 1103N1 | 817704 | 96,6 96,6 | ALB |
| **XSARA PICASSO** | | | | | | | | | | |
| 1.8 i 16V CH6/FZB/FZC | E | 1749 | EW7J4 | M | | | 12/99 ▸ 12/05 | 1103N0 | 817705 | 96,6 96,6 | ALB |
| 2.0 i 16V CHRFNE | E | 1997 | EW10J4 | A | | | 01/03 ▸ 12/05 | 1103N0 | 817705 | 96,6 96,6 | ALB |
| 2.0 HDi CHR/HYA/HYB | D | 1997 | DW10TD | M | | | 12/99 ▸ 12/05 | 1103N1 | 817704 | 96,6 96,6 | ALB |
| **CITROEN** | | | | | | | | | | |
| **ACADIANE** | | | | | | | | | | |
| 0.6 AYCD ; AYU | E | 602 | M28 | M | | | 02/78 ▸ 06/87 | 5440576 | •816597 | 156 72 | ALB |
| **BERLINGO (96>2002)** | | | | | | | | | | |
| 1.9 D MBW/JYB/JYP/JZC/JZF ; MEWJZF ; MCW/JYB JZF ; MFW/JYB/JZF 9156 ▸ | D | 1868 | DW8,DW8B | M | +/- | | 12/01 ▸ 12/02 | 1103N0 | 817705 | 96,6 96,6 | ALB |
| 2.0 HDi MBR/HYB/HYF ; MCR HYB/HYF ; MFR/HYB/HYF | D | 1997 | DW10TD | M | | | 10/99 ▸ 12/02 | 1103N1 | 817704 | 96,6 96,6 | ALB |
| **BERLINGO (2002>)** | | | | | | | | | | |
| 1.9 D GCWJYB ; GEWJYB ; GJWJYB ; GBW/JYB | D | 1868 | DW8B | M | +/- | | 12/02 ▸ 05/08 | 1103N0 | 817705 | 96,6 96,6 | ALB |
| 1.9 D | D | 1868 | DW8B | M | | | 12/02 ▸ 05/08 | 1103N0 | 817705 | 96,6 96,6 | ALB |
| 2.0 HDi GCRHYB ; GERHYB ; GJRHYK ; GBR HYB | D | 1997 | DW10TD | M | +/- | | 12/02 ▸ 05/08 | 1103N1 | 817704 | 96,6 96,6 | ALB |
| 2.0 HDi GCRHYB ; GJRHYB | D | 1997 | DW10TD | M | | | 03/04 ▸ 05/08 | 1103N1 | 817704 | 96,6 96,6 | ALB |
| **DISPATCH (95>2003)** | | | | | | | | | | |
| 2.0 HDi BERHXA ; BYRHXA ; BZRHXA ; BAR HXA | D | 1997 | DW10BTED | M | | | 09/00 ▸ 12/03 | 1103N1 | 817704 | 96,6 96,6 | ALB |
| **DISPATCH (2004>2006)** | | | | | | | | | | |
| 2.0 HDi | D | 1997 | DW10BTED,DW10BTED+L4 | M | | | 01/04 ▸ 12/06 | 1103N1 | 817704 | 96,6 96,6 | ALB |
| **JUMPER (94>2001)** | | | | | | | | | | |
| 2.0 HDi 231/AJ2/BJ2/VJ2 | D | 1997 | DW10TD | M | | | 09/01 ▸ 12/01 | 1103H4 | 817704 | 96,6 96,6 | ALB |
| 2.0 HDi 231/AJ2/BJ2/VJ2 | D | 1997 | DW10TD | M | | | 09/01 ▸ 12/01 | 1103N1 | 817704 | 96,6 96,6 | ALB |
| 2.5 TD 231/C92/G92/H92/J92 V92 ; 232/B92/F92/G92/H92/J92/K92/L92/N92 V92 ; 233/D92/G92/H92/J92/K92/L92/N92 | D | 2446 | DJ5T | M | | | 02/94 ▸ 08/98 | 1103E8 | 817649 | | |

| Type Ctr. | | CC | | AC | | | OE | Valeo | DIM. | TECH |
|---|---|---|---|---|---|---|---|---|---|---|
| **CITROEN** (.../...) | | | | | | | | | | |
| **JUMPER (94>2001) (.../...)** | | | | | | | | | | |
| 2.8 D 232 | D | 2798 | 8140-63 | M | | | 06/99 ▸ 12/01 | 1103N1 | **817704** | 96,6 96,6 ALB |
| 2.8 D 232 | D | 2798 | 8140-63 | M | | | 06/99 ▸ 12/01 | 1103H4 | **817704** | 96,6 96,6 ALB |
| **JUMPER (2002>2006)** | | | | | | | | | | |
| 2.0 HDi ZAA/MF/MP ; ZBA/MD MFA/MP | D | 1997 | DW10UTD | M | | | 01/02 ▸ | 1103H4 | **817704** | 96,6 96,6 ALB |
| 2.0 HDi ZAA/MF/MP ; ZBA/MD MFA/MP | D | 1997 | DW10UTD | M | | | 01/02 ▸ 06/06 | 1103N1 | **817704** | 96,6 96,6 ALB |
| 2.2 HDi ZAR/MF/MP ; ZBR/MD MF/MH/MP ; ZCR/MD/MF/MH/MM | D | 2179 | DW12TED | M | | | 01/02 ▸ | 1103H4 | **817704** | 96,6 96,6 ALB |
| 2.2 HDi ZAR/MF/MP ; ZBR/MD MF/MH/MP ; ZCR/MD/MF/MH/MM | D | 2179 | DW12TED | M | | | 01/02 ▸ 06/06 | 1103N1 | **817704** | 96,6 96,6 ALB |
| **JUMPY (95>2003)** | | | | | | | | | | |
| 2.0 HDi BDRHXB ; BERHXA ; BAR HXA ; BSR/HXA/HXB ; BYR/HXA/HXB ; BZR/HXA HXB | D | 1997 | DW10BTED | M | | | 09/00 ▸ 12/03 | 1103N1 | **817704** | 96,6 96,6 ALB |
| **JUMPY (2004>2006)** | | | | | | | | | | |
| 2.0 HDi,2.0 HDi 16V BBR/HXB/HZB ; BER HXB/HZB ; BURHZB ; BSR/HXB/HZB ; BWR/HXB HZB ; BZRHWB ; BYR/HWB/HXB/HZB | D | 1997 | DW10ATED4,DW10BTED DW10BTED+L4 | M | | | 01/04 ▸ 12/06 | 1103N1 | **817704** | 96,6 96,6 ALB |
| **RELAY (2002>2006)** | | | | | | | | | | |
| 2.0 HDi ZAA/MF ; ZBA/MD/MF | D | 1997 | DW10UTD | M | | | 01/02 ▸ 06/06 | 1103N1 | **817704** | 96,6 96,6 ALB |
| 2.2 HDi ZAR/MF ; ZBR/MD MF ; ZCR/MD/MH/MM | D | 2179 | DW12TED | M | | | 01/02 ▸ 06/06 | 1103N1 | **817704** | 96,6 96,6 ALB |
| **FIAT** | | | | | | | | | | |
| **TEMPRA** | | | | | | | | | | |
| 1.6,1.6 ie 159/AD14/AE14/AE15 AS14/AS15 | E | 1581 | 159A3.000,159A3.046,159A3.048 | A | | | 11/89 ▸ 02/93 | 7607190 | **816666** | 155 144 ALB |
| 2.0 ie 159AP55 | E | 1995 | 159A6.046 | M | | | 03/92 ▸ 02/93 | 46469281 | **816666** | 155 144 ALB |
| 2.0 ie 159AP55 | E | 1995 | 159A6.046 | M | | | 03/93 ▸ 1996 | 7607190 | **816666** | 155 144 ALB |
| 2.0 ie 159AP14 | E | 1995 | 159A6.046 | A | | | 03/93 ▸ 1996 | 7607190 | **816666** | 155 144 ALB |
| 1.9 D,1.9 TD,1.9 TDs 159/AG54/AG55/AI54 AI55/AI5C/AL/AQ54/AQ55/BI54/BI55 | D | 1929 | 160A6.000,160A6.046,160A7.000 160B6.046,160D1.000 | M | | | 11/89 ▸ 1996 | 7607190 | **816666** | 155 144 ALB |
| **COUPE** | | | | | | | | | | |
| 2.0 i Turbo 20V 175AXD1 | E | 1998 | 175A3.000 | M | | | 07/96 ▸ 09/00 | 46538495 | **816666** | 155 144 ALB |
| **MAREA** | | | | | | | | | | |
| 1.9 TD 185/AXE/AXF/BXE/BXF | D | 1910 | 182A7.000,182A8.000 | M | | | 07/96 ▸ 11/97 | 46469281 | **816666** | 155 144 ALB |
| **MARENGO (159) (89>93)** | | | | | | | | | | |
| 1.9 Tds 159AI | D | 1929 | 160A6.000 | M | | | 11/89 ▸ 02/93 | 7607190 | **816666** | 155 144 ALB |
| **MARENGO (159) (93>95)** | | | | | | | | | | |
| 1.9 TD 159BI | D | 1929 | 160A6.000 | M | | | 03/93 ▸ 01/95 | 7607190 | **816666** | 155 144 ALB |
| **REGATA** | | | | | | | | | | |
| - 138/AZ54/AZ55 | D | 1929 | 831D1.000 | M | | | 09/86 ▸ | 7648290 | | 170 126 ALB |
| **RITMO (83>88)** | | | | | | | | | | |
| 125 TC,130 TC 138/A/A9A | E | 1995 | FIAT03,FIAT04 | M | | | 11/82 ▸ 1988 | 7648290 | | 170 126 ALB |
| **TIPO** | | | | | | | | | | |
| 2.0 ie 160/AJ/AJ54/AT | E | 1995 | 159A5.046,159A6.046 | A | | | 06/90 ▸ 1995 | 7607190 | **816666** | 155 144 ALB |
| 1.9 TD,1.9 TDs 160/AQ55/AR55/EI53 EI55/EL55 | D | 1929 | 160A6.000,160A6.046,160D1.000 | M | | | 01/88 ▸ 1995 | 7607190 | **816666** | 155 144 ALB |
| **UNO (83>89)** | | | | | | | | | | |
| 60 Selecta 146/AJ13/AJ15 | E | 1116 | 146A4.000 | A | | | 10/87 ▸ 1989 | 7544021 | | 190 77 ALB |
| - 146/AM53/AM55/BM53 | E | 1301 | 146A2.000 | M | | | 03/85 ▸ 1989 | 7692224 | | 250 77 |
| - 16A65CT ; 146/A653/A655 | D | 1367 | 146B3.000 | M | | | 04/86 ▸ 1989 | 7692224 | | 250 77 |
| **UNO (89>95)** | | | | | | | | | | |
| 60 146/EG13/EG15/EG1C | E | 1116 | 146A4.000,146A4.048 | A | | | 07/90 ▸ 12/92 | 7544021 | | 190 77 ALB |

Oil Cooler Refroidisseur d'huile Ölkühler Radiatore olio Olie Koeler Yağ soğutucu Refrigerador de aceite
Масляный охладитель olajhűtő Olejový chladič Răcitor Ulei Ψυγείο Λαδιού



• **New** Nouveau **Nuevo** Novo **Nuovo** Nieuw **Neu** Nowość **Yeni** Новый Νέο **Novy**

| Type | Ctr. | CC | | AC | | | OE | Valeo | DIM. | TECH |
|---|---|---|---|---|---|---|---|---|---|---|
| **FIAT (.../...)** | | | | | | | | | | |
| **UNO (89>95) (.../...)** | | | | | | | | | | |
| - 146EQ53 | E | 1301 | 146A2.000 | M | | | 10/89 ▸ 03/91 | 7692224 | 250 77 | |
| - 146EH15 | E | 1372 | 146C1.000 | A | | | 10/89 ▸ 12/93 | 7544021 | 190 77 | ALB |
| - 146/EM13/EM15 | E | 1498 | 149C1.000 | A | | | 10/89 ▸ 12/93 | 7544021 | 190 77 | ALB |
| 70,70 S 146/ES53/ES55/ES5C | D | 1367 | 146B3.000 | M | | | 10/89 ▸ 07/93 | 7692224 | 250 77 | |
| **FORD** | | | | | | | | | | |
| **GALAXY (95>2000)** | | | | | | | | | | |
| 2.8 i VR6 WGRAAA | E | 2792 | PW | M | | | 05/95 ▸ 03/00 | 1002825 | **817943** | 94 94 |
| 2.8 i VR6 WGRAAA | E | 2792 | PW | A | | | 05/95 ▸ 03/00 | 1002825 | **817943** | 94 94 |
| 1.9 TDi WGR1Z1 | D | 1896 | 1.9N | M | | | 11/95 ▸ 03/00 | 1002825 | **817943** | 94 94 |
| **GALAXY (2000>2006)** | | | | | | | | | | |
| 2.8 i V6 | E | 2792 | PW-204 | M | | | 04/00 ▸ 04/06 | 1002825 | **817943** | 94 94 |
| 2.8 i V6 | E | 2792 | PW-204 | A | | | 04/00 ▸ 04/06 | 1002825 | **817943** | 94 94 |
| **LANCIA** | | | | | | | | | | |
| **DEDRA** | | | | | | | | | | |
| 2.0 ie Turbo 835/AO54W/AP54W AQ54A/AR54A | E | 1995 | 835A7.000,835A7.046,835A8.000 835A8.046 | M | | | 12/90 ▸ 06/94 | 46469281 | **816666** | 155 144 ALB |
| 1.9 TDs 835/AG54A/AG54A AS54A | D | 1929 | 160D1.000,835A4.000 | M | | | 03/89 ▸ 06/94 | 46469281 | **816666** | 155 144 ALB |
| **DELTA (79>86)** | | | | | | | | | | |
| 1600 Turbo 831AB07 | E | 1585 | 831A7.000 | M | | | 04/83 ▸ 04/86 | 82398822 | 157 108 | ALB |
| **DELTA (86>93)** | | | | | | | | | | |
| 1600 Turbo,1600 ie 831/AB010/AB016 1600 ie Turbo AB017/AB020/AB020S | E | 1585 | 149C2.000,831B3.000,831B7.000 831B7.046 | M | | | 05/86 ▸ 1993 | 82449165 | 150 125 | ALB |
| 1.9 TD 831/AB018/AB021 | D | 1929 | 831D1.000 | M | | | 04/86 ▸ 1993 | 82449165 | 150 125 | ALB |
| **DELTA (93>99)** | | | | | | | | | | |
| 1.8 ie 16V 836/AR53A/AR55A | E | 1747 | 183A1.000 | M | | | 05/96 ▸ 08/99 | 46469281 | **816666** | 155 144 ALB |
| 2.0 i 16V,2.0 i Turbo 16V 836/AB53A/AB55A AS53A/CA53A/CA55A | E | 1995 | 175A4.000,836A2.000,836A3.000 | M | | | 03/93 ▸ 08/99 | 46469281 | **816666** | 155 144 ALB |
| 1.9 TD 836/AM53A/AM55A AN53A/AN55A | D | 1929 | 160D1.000,835A4.000 | M | | | 06/94 ▸ 08/99 | 46469281 | **816666** | 155 144 ALB |
| **MERCEDES** | | | | | | | | | | |
| **SL (129) (89>2001)** | | | | | | | | | | |
| 300 i 129.061 | E | 2960 | 104.981 | M | | | 03/89 ▸ 07/93 | 1295000400 | 360 106 | CBL |
| 300 i 129.061 | E | 2960 | 104.981 | A | | | 03/89 ▸ 07/93 | 1295000400 | 360 106 | CBL |
| 500 i,SL500 i 129/.066/.067 | E | 4973 | 119.960,119.972,119.982 | A | | | 03/89 ▸ 07/01 | 1295000400 | 360 106 | CBL |
| 600 i,SL600 i 129.076 | E | 5987 | 120.981,120.983 | A | | | 06/92 ▸ 07/01 | 1295000600 | 525 | CBL |
| **NISSAN** | | | | | | | | | | |
| **TRADE** | | | | | | | | | | |
| 3.0 D VC22373 ; VC32273 ; VD22373 ; VD33273 ; VF15373 ; VF16373 ; VF25373 ; VM25373 ; VS15373 ; VS16373 ; VS25373 ; VC123 2130569T00 73 | D | 2953 | BD30-IIM | | | | 06/94 | ▸ 2002 | | |
| **PEUGEOT** | | | | | | | | | | |
| **205** | | | | | | | | | | |
| 1.6 i 20CB62 ; 20DB62 | E | 1580 | XU5JA | M | - | | 08/87 ▸ 09/98 | 112405 | 150 71 | ALB |
| 1.6 i 20C/B62 ; 741/B66/C66 | E | 1580 | XU5J,XU5J1,XU5JA | M | | | 02/83 ▸ 09/98 | 112405 | 150 71 | ALB |
| 1.9 i 20C/D62/DF2 ; 20D/DF2/HF2 | E | 1905 | XU9JA | M | - | | 08/87 ▸ 09/98 | 112405 | 150 71 | ALB |
| 1.9 i 20D/DF2 ; 741/B86/C86 | E | 1905 | XU9J1,XU9JA | M | | | 02/83 ▸ 06/90 | 112405 | 150 71 | ALB |
| 1.9 i 20CDF4 ; 20DDF4 ; 20A/DF4 | E | 1905 | XU9JA | A | - | | 06/90 ▸ 09/98 | 112405 | 150 71 | ALB |
| 1.7 D 20A/A91/A92 ; 20C/A91/A92 ; 20S/A91 A92 ; 741/A90/A98/C90/C98/S90/S98 | D | 1769 | XUD7 | M | | | 08/83 ▸ 09/98 | 112405 | 150 71 | ALB |

# PEUGEOT (.../...)

| | | | CC | | AC | | | OE | Valeo | DIM. | TECH |
|---|---|---|---|---|---|---|---|---|---|---|---|
| **206** | | | | | | | | | | | |
| 2.0 i 16V | 2DRFNF ; 2ERFNF ; 2CR FNF/FRE | E | 1997 | EW10J4 | M | | | ▸ 02/09 | 1103N0 | **817705** | 96,6 96,6 ALB |
| 2.0 i 16V | 2CRFKA | E | 1997 | EW10J4S | M | | | 05/03 ▸ 02/09 | 1103N5 | **817643** | 96,6 96,6 ALB |
| 1.9 D | 2AW/JYF/JYU/JZT/JZW ; 2CW/JYF/JZT/JZW ; 2SW JYU/JZW ; 2TW/JYU/JZW | D | 1868 | DW8,DW8B | M | | | 09/98 ▸ 02/09 | 1103N0 | **817705** | 96,6 96,6 ALB |
| 2.0 HDi | 2AR/HYE/HYF HYU ; 2ERHYF ; 2HRHYF ; 2KRHYF ; 2SRHYE ; 2CR HYE/HYF/HYU/HYX | D | 1997 | DW10TD | M | | | 09/99 ▸ 06/08 | 1103N1 | **817704** | 96,6 96,6 ALB |
| **306 (97>2002)** | | | | | | | | | | | |
| 1.9 D | 7AW/JYF/JZT ; 7BW/JYF/JZT ; 7CW/JYF JZT ; 7SWJYF ; 7EW/JYF/JZT 8362 ▸ | D | 1868 | DW8,DW8B | M | | | 10/99 ▸ 03/02 | 1103N0 | **817705** | 96,6 96,6 ALB |
| 2.0 HDi | 7AR/HYE HYF ; 7CRHYE ; 7BR/HYE/HYF ; 7HRHYF ; 7ER HYE/HYF | D | 1997 | DW10TD | M | | | 03/99 ▸ 03/02 | 1103N1 | **817704** | 96,6 96,6 ALB |
| **307(2001>2005)** | | | | | | | | | | | |
| 2.0 i 16V | 3BRFNC ; 3AR/FN8 FNB ; 3CR/FN8/FNB/FNC ; 3ER/FNB/FNC ; 3HR FNB/FNC | E | 1997 | EW10J4 | M | | | 03/01 ▸ 06/05 | 1103N0 | **817705** | 96,6 96,6 ALB |
| 2.0 i 16V | 3BRFKC | E | 1997 | EW10J4S | M | | | 09/03 ▸ 06/05 | 1103N5 | **817643** | 96,6 96,6 ALB |
| 2.0 i 16V | 3BRFNF ; 3AR FNE ; 3CR/FNE/FNF ; 3ER/FNE/FNF ; 3HR/FNE FNF | E | 1997 | EW10J4 | A | | | 03/01 ▸ 06/05 | 1103N0 | **817705** | 96,6 96,6 ALB |
| 2.0 HDi | 3AR/HSB/HYB HYM ; 3CR/HSB/HYB/HYM ; 3ER/HSB/HYB ; 3HR HSB/HYB | D | 1997 | DW10ATED,DW10TD | M | | | 03/01 ▸ 06/05 | 1103N1 | **817704** | 96,6 96,6 ALB |
| **307 (2005>)** | | | | | | | | | | | |
| 2.0 i 16V | 3BRFKC ; 3CRFKC ; 3AR FKC | E | 1997 | EW10J4S | M | | | 06/05 ▸ 03/09 | 1103N5 | **817643** | 96,6 96,6 ALB |
| 2.0 HDi | 3CRHY ; 3ERHY ; 3HRHY ; 3AR HY | D | 1997 | DW10TD | M | | | 12/06 ▸ 06/08 | 1103N1 | **817704** | 96,6 96,6 ALB |
| **406 (95>2003)** | | | | | | | | | | | |
| 2.0 HDi | 8ERHZE ; 8FRHZE ; 8BR HZE | D | 1997 | DW10ATED | M | | | 10/98 ▸ 03/99 | 1103N1 | **817704** | 96,6 96,6 ALB |
| 2.2 HDi 16V | 8C4HXF | D | 2179 | DW12TED4 | M | | | 01/01 ▸ 04/03 | 1103N1 | **817704** | 96,6 96,6 ALB |
| **406 (99>2004)** | | | | | | | | | | | |
| 2.0 i 16V | 8BR/FNA/FRE ; 8ER FNA/FRE ; 8FR/FNA/FRE 9821 ▸ | E | 1997 | EW10J4 | M | | | 09/03 ▸ 04/04 | 1103N0 | **817705** | 96,6 96,6 ALB |
| 2.0 16V,2.0 i 16V | 8CRFNR ; 8ERFNR ; 8FRFNR ; 8BR FNR/FRR 9821 ▸ | E | 1997 | EW10J4 | A | | | 09/03 ▸ 10/04 | 1103N0 | **817705** | 96,6 96,6 ALB |
| 2.0 i 16V | 8BR/FNA/FRE ; 8ER FNA/FRE ; 8FR/FNA/FRE ▸ 9820 | E | 1997 | EW10J4 | M | | | 04/99 ▸ 09/03 | 1103N1 | **817704** | 96,6 96,6 ALB |
| 2.0 16V,2.0 i 16V | 8CRFNR ; 8ERFNR ; 8FRFNR ; 8BR FNR/FRR ▸ 9820 | E | 1997 | EW10J4 | A | | | 06/99 ▸ 09/03 | 1103N1 | **817704** | 96,6 96,6 ALB |
| 2.2 i 16V | 8C3FZA ; 8B3/FZE FZF ; 8E3/FZE/FZF | E | 2230 | EW12J4 | M | | | 05/00 ▸ 10/04 | 1103N1 | **817704** | 96,6 96,6 ALB |
| 2.0 HDi | 8BR/HSF/HYE/HYF/HZE HZF ; 8ER/HSF/HYE/HYF/HZE/HZF ; 8FR/HSF/HYF HZF | D | 1997 | DW10ATED,DW10TD | M | | | 04/99 ▸ 04/04 | 1103N1 | **817704** | 96,6 96,6 ALB |
| 2.0 HDi | 8BRHZR ; 8ERHZR | D | 1997 | DW10ATED | A | | | 01/01 ▸ 04/04 | 1103N1 | **817704** | 96,6 96,6 ALB |
| 2.2 HDI 16V | 8C4HXF ; 8E4HXF ; 8B4 HXF | D | 2179 | DW12TED4 | M | | | 10/00 ▸ 10/04 | 1103N1 | **817704** | 96,6 96,6 ALB |
| **407** | | | | | | | | | | | |
| 2.0 i 16V | 6DRFNB ; 6ERFNB | E | 1997 | EW10J4 | M | | | 04/04 ▸ 10/05 | 1103N0 | **817705** | 96,6 96,6 ALB |
| 2.0 i 16V | 6DR/FJF/FNE ; 6ER FJF/FNE | E | 1997 | EW10A,EW10J4 | A | | | 04/04 ▸ 12/07 | 227555 | •**818889** | 94,7 97,3 |
| 2.0 i 16V | 6DRFNE ; 6ERFNE | E | 1997 | EW10J4 | A | | | 04/04 ▸ 10/05 | 1103N0 | **817705** | 96,6 96,6 ALB |

Oil Cooler Refroidisseur d'huile Ölkühler Radiatore olio Olie Koeler Yağ soğutucu Refrigerador de aceite
Масляный охладитель olajhűtő Olejový chladič Răcitor Ulei Ψυγείο Λαδιού



• **New** Nouveau **Nuevo** Novo **Nuovo** Nieuw **Neu** Nowość **Yeni** Новый Νέο **Novy**

| | | CC | | AC | | | OE | Valeo | DIM. | TECH |
|---|---|---|---|---|---|---|---|---|---|---|
| **PEUGEOT (.../...)** | | | | | | | | | | |
| **407 (.../...)** | | | | | | | | | | |
| 2.0 i 16V 11354 ▸ | 6DRFJF ; 6ERFJF | E | 1997 | EW10A | A | | 12/07 ▸ | 227554 | •818890 | 94,7 94,7 |
| 2.2 i 16V | 6D3/FYH FZH ; 6J3FYH ; 6E3/FYH/FZH | E | 2230 | EW12J4 | M | | 04/04 ▸ | 1103N1 | 817704 | 96,6 96,6 ALB |
| 2.2 i 16V | 6D3/FYF/FZF ; 6E3 FYF/FZF | E | 2230 | EW12J4 | A | | 04/04 ▸ | 1103N1 | 817704 | 96,6 96,6 ALB |
| **505** | | | | | | | | | | |
| 2.3 D | 551/A40/A48/D40/D48/F40/S40/S48 | D | 2304 | XD2 | M | | 08/79 ▸ 07/85 | 112403 | | 150 74 ALB |
| 2.3 D | 551A45 | D | 2304 | XD2 | A | | 08/79 ▸ 07/84 | 112403 | | 150 74 ALB |
| **605 (89>94)** | | | | | | | | | | |
| 2.0,2.0 i | 6BR/2A2/2A8/5A2/6A2 6A8 | E | 1998 | XU102C,XU102C TR,XU10J2 | M | | 10/89 ▸ 06/94 | 227528 | | 150 190 ALB |
| 2.0 i | 6BR6A4 | E | 1998 | XU10J2 | A | | 04/90 ▸ 06/94 | 227528 | | 150 190 ALB |
| 3.0 i V6,3.0 i V6 24V | 6BU/FZ2/KZ2 | E | 2963 | ZPJ,ZPJ4 | M | | 09/93 ▸ 06/94 | 227528 | | 150 190 ALB |
| 3.0 i V6 | 6BUFZ4 | E | 2963 | ZPJ | A | | 09/93 ▸ 06/94 | 227528 | | 150 190 ALB |
| 3.0 i V6,3.0 i V6 24V | 6BS/6A2/FZ2/KZ2 | E | 2975 | ZPJ,ZPJ4 | M | | 10/89 ▸ 06/94 | 227528 | | 150 190 ALB |
| 3.0 i V6 | 6BS/6A4/FZ4 | E | 2975 | ZPJ | A | | 04/90 ▸ 06/94 | 227528 | | 150 190 ALB |
| **605 (94>99)** | | | | | | | | | | |
| 3.0 i V6 | 6BUFZ4 | E | 2963 | ZPJ | A | | 07/94 ▸ 05/99 | 227528 | | 150 190 ALB |
| **607 (2000>2004)** | | | | | | | | | | |
| 2.2 i 16V | 9D3/FZB/FZC | E | 2230 | EW12J4 | M | | 05/00 ▸ 09/04 | 1103N1 | 817704 | 96,6 96,6 ALB |
| 2.2 i 16V | 9D3/FZ2/FZ6/FZE | E | 2230 | EW12J4 | A | | 05/00 ▸ 09/04 | 1103N1 | 817704 | 96,6 96,6 ALB |
| 2.0 HDi | 9DR/HSB/HZB | D | 1997 | DW10ATED | M | | 05/00 ▸ 09/04 | 1103N1 | 817704 | 96,6 96,6 ALB |
| 2.2 HDi 16V | 9D4/HXB/HXG | D | 2179 | DW12TED4 | M | | 05/00 ▸ 09/04 | 1103N1 | 817704 | 96,6 96,6 ALB |
| 2.2 HDi 16V | 9D4HXE | D | 2179 | DW12TED4 | A | | 09/00 ▸ 09/04 | 1103N1 | 817704 | 96,6 96,6 ALB |
| **607 (2004>)** | | | | | | | | | | |
| 2.2 i 16V | 9U3FZC | E | 2230 | EW12J4 | M | | 10/04 ▸ | 1103N1 | 817704 | 96,6 96,6 ALB |
| 2.2 i 16V | 9U3/FYH/FZF | E | 2230 | EW12J4 | A | | 10/04 ▸ | 1103N1 | 817704 | 96,6 96,6 ALB |
| 2.0 HDi | 9URHSB | D | 1997 | DW10ATED | M | | 10/04 ▸ | 1103N1 | 817704 | 96,6 96,6 ALB |
| 2.2 HDi 16V | 9U4HXG | D | 2179 | DW12TED4 | M | | 10/04 ▸ | 1103N1 | 817704 | 96,6 96,6 ALB |
| 2.2 HDi 16V | 9U4HXE | D | 2179 | DW12TED4 | A | | 10/04 ▸ | 1103N1 | 817704 | 96,6 96,6 ALB |
| **806 (98>2002)** | | | | | | | | | | |
| 2.0 HDi,2.0 HDi 16V | AFR/HWB/HZA | D | 1997 | DW10ATED,DW10ATED4 | M | | 08/99 ▸ 05/02 | 1103N1 | 817704 | 96,6 96,6 ALB |
| **807** | | | | | | | | | | |
| 2.0 i 16V | EBR/FJF/FNF | E | 1997 | EW10A,EW10J4 | A | | 06/02 ▸ | 227554 | •818890 | 94,7 94,7 |
| 2.2 i 16V | EA3FZC ; EB3FZC | E | 2230 | EW12J4 | M | | 06/02 ▸ 09/05 | 1103N1 | 817704 | 96,6 96,6 ALB |
| 2.2 i 16V | EA3FZC ; EB3FZC | E | 2230 | EW12J4 | M | | 06/02 ▸ | 1103H4 | 817704 | 96,6 96,6 ALB |
| 2.0 HDi 16V | EARHTB ; EBRHTB | D | 1997 | DW10ATED4 | M | | 06/02 ▸ 05/06 | 1103N1 | 817704 | 96,6 96,6 ALB |
| 2.0 HDi 16V | EARHTB ; EBRHTB | D | 1997 | DW10ATED4 | M | | 06/02 ▸ | 1103H4 | 817704 | 96,6 96,6 ALB |
| 2.0 HDi 16V | EAR/HME ; EBR/HME HWB | D | 1997 | DW10ATED4 | A | | 03/03 ▸ 10/06 | 227554 | •818890 | 94,7 94,7 |
| 2.0 HDi 16V | EAR/HME ; EBR/HME HWB | D | 1997 | DW10ATED4 | A | | 03/03 ▸ 10/06 | 1103N1 | 817704 | 96,6 96,6 ALB |
| 2.2 HDi 16V | EA4HWB ; EB4HWB | D | 2179 | DW12TED4 | M | | 06/02 ▸ | 1103H4 | 817704 | 96,6 96,6 ALB |
| 2.2 HDi 16V | EA4/HWB/HWG ; EB4 HWB/HWG | D | 2179 | DW12TED4 | M | | 06/02 ▸ 06/06 | 1103N1 | 817704 | 96,6 96,6 ALB |
| **PEUGEOT** | | | | | | | | | | |
| **BOXER (94>2001)** | | | | | | | | | | |
| 2.0 HDi | 231AJ2 | D | 1997 | DW10TD | M | | 09/01 ▸ | 1103H4 | 817704 | 96,6 96,6 ALB |
| 2.0 HDi | 231/AJ2/VJ2 | D | 1997 | DW10TD | M | | 09/01 ▸ 12/01 | 1103N1 | 817704 | 96,6 96,6 ALB |
| 2.5 TD | 231/B02/B59/B92/B94 C02/V94 ; 233J92 ; 232/B02/B92/B94/H92/J02 J92/J94/L92/V94 | D | 2446 | DJ5T | M | | 02/94 ▸ 12/01 | 1103E8 | 817649 | |
| **BOXER (2002>2006)** | | | | | | | | | | |
| 2.0 HDi | ZAA/MF/MP ; ZBA/MD MFA/MP | D | 1997 | DW10UTD | M | | 01/02 ▸ | 1103H4 | 817704 | 96,6 96,6 ALB |
| 2.0 HDi | ZAA/MF/MP ; ZBA/MD MFA/MP | D | 1997 | DW10UTD | M | | 01/02 ▸ 06/06 | 1103N1 | 817704 | 96,6 96,6 ALB |

| Type Ctr. | | CC | | AC | | | OE | Valeo | DIM. | TECH |
|---|---|---|---|---|---|---|---|---|---|---|
| **PEUGEOT (.../...)** | | | | | | | | | | |
| **BOXER (2002>2006) (.../...)** | | | | | | | | | | |
| 2.2 HDi ZAR/MFA/MP ; ZBR/MD MF/MH/MP ; ZCR/MD/MF/MH/MM | D | 2179 | DW12TED | M | | | 01/02 ▸ | 1103H4 | **817704** | 96,6 96,6 ALB |
| 2.2 HDi ZAR/MFA/MP ; ZBR/MD MF/MH/MP ; ZCR/MD/MF/MH/MM | D | 2179 | DW12TED | M | | | 01/02 ▸ 06/06 | 1103N1 | **817704** | 96,6 96,6 ALB |
| **EXPERT (95>2003)** | | | | | | | | | | |
| 2.0 HDi,2.0 HDi 16V BCRHZB ; BAR/HWB HZB ; BERHZB ; BHRHZB ; BDR/HXA/HXB/HZ/HZA HZB ; BTRHWB ; BURHZB ; BWRHZB ; BSR/HXA/HXB HZB ; BYR/HXA/HXB/HZB ; BZR/HWB/HXA/HXB | D | 1997 | DW10ATED,DW10ATED4,DW10BTED DW10CTED | M | | | 09/00 ▸ 12/03 | 1103N1 | **817704** | 96,6 96,6 ALB |
| **EXPERT II (2004>2006)** | | | | | | | | | | |
| 2.0 HDi,2.0 HDi 16V BBR/HXB/HZB ; BER HXB/HZB ; BTRHWB ; BURHZB ; BVRHWB ; BSR/HXB HZB ; BXRHWB ; BWR/HXB/HZB ; BYR/HXB HZB ; BZR/HWB/HXB | D | 1997 | DW10ATED4,DW10BTED DW10BTED+L4 | M | | | 01/04 ▸ 12/06 | 1103N1 | **817704** | 96,6 96,6 ALB |
| **PARTNER (96>2002)** | | | | | | | | | | |
| 1.9 D 5BW/JYF/JZE/JZT ; 5CW/JYF/JZE ; 5FW/JYF/JZE 9156 ▸ | D | 1868 | DW8,DW8B | M | +/- | | 12/01 ▸ 11/02 | 1103N0 | **817705** | 96,6 96,6 ALB |
| 2.0 HDi 5BR/HYE/HYF ; 5CR HYE/HYF ; 5FR/HYE/HYF/HYU | D | 1997 | DW10TD | M | +/- | | 05/00 ▸ 11/02 | 1103N1 | **817704** | 96,6 96,6 ALB |
| **PARTNER (2002>)** | | | | | | | | | | |
| 1.9 D GCWJYB ; GEWJYB ; GJWJYB ; GBW/JYB | D | 1868 | DW8B | M | +/- | | 11/02 ▸ 05/08 | 1103N0 | **817705** | 96,6 96,6 ALB |
| 1.9 D GBWJYB | D | 1868 | DW8B | M | | | 03/04 ▸ 05/08 | 1103N0 | **817705** | 96,6 96,6 ALB |
| 2.0 HDi GCRHYB ; GERHYB ; GJRHYK ; GBR HYB | D | 1997 | DW10TD | M | +/- | | 11/02 ▸ 05/08 | 1103N1 | **817704** | 96,6 96,6 ALB |
| 2.0 HDi GCRHYB ; GJRHY | D | 1997 | DW10TD | M | | | 03/04 ▸ 05/08 | 1103N1 | **817704** | 96,6 96,6 ALB |
| **RANCH (2002>)** | | | | | | | | | | |
| 1.9 D GBWJYB ; GCWJYB | D | 1868 | DW8B | M | +/- | | 11/02 ▸ 05/08 | 1103N0 | **817705** | 96,6 96,6 ALB |
| 2.0 HDi GBRHYB ; GCRHYB | D | 1997 | DW10TD | M | +/- | | 11/02 ▸ 05/08 | 1103N1 | **817704** | 96,6 96,6 ALB |
| **RENAULT** | | | | | | | | | | |
| **R19** | | | | | | | | | | |
| 1.4 C537 ; L537 ; B53/7 | E | 1390 | E6J | A | + | | 07/88 ▸ 04/92 | 7700804591 | | 150 190 ALB |
| 1.9 D,1.9 TD B53/4/I/J/K/T ; C53 4/I/J/K/T/Z ; L53/4/I/J/K/T/Z ; S53/4/I/J/K | D | 1870 | F8Q | M | + | | 07/88 ▸ 10/95 | 7700804591 | | 150 190 ALB |
| 1.9 D,1.9 TD B53/4/I/J/K/T ; C53 4/I/J/K/T ; L53/4/I/J/K/T ; S53/4/I/J/K | D | 1870 | F8Q | M | - | | 07/88 ▸ 10/95 | 7700793612 | | 150 190 ALB |
| **R20** | | | | | | | | | | |
| 2.1 TD Turbo D R127 | D | 2068 | J8S | M | | | 09/82 ▸ 1984 | 7700716361 | | 230 103 ALB |
| **R25** | | | | | | | | | | |
| 2.8 V6,2.8 V6 Injection B29/3/A/F | E | 2849 | Z7W | M | | | 09/85 ▸ 1992 | 7700796538 | | 178 190 |
| 2.8 V6 B29/3/F | E | 2849 | Z7W | A | | | 09/85 ▸ 1992 | 7700796538 | | 178 190 |
| **R30** | | | | | | | | | | |
| 2.1 TD Turbo D 1270 | D | 2068 | J8S | M | | | 10/81 ▸ 1984 | 7700716361 | | 230 103 ALB |
| **CHEROKEE** | | | | | | | | | | |
| 2.1 TD JJ8B ; BL7/7/8/9 | D | 2068 | J8S | M | | | 09/84 ▸ 12/92 | 8952001848 | | 230 103 ALB |
| **ESPACE III (96>2000)** | | | | | | | | | | |
| 2.2 dT JE0/E/H | D | 2188 | G8T | M | + | | 09/96 ▸ 10/97 | 7701041956 | | |
| **LAGUNA (94>98)** | | | | | | | | | | |
| 2.2 Dt B569 | D | 2188 | G8T | M | + | | 03/96 ▸ 04/98 | 7701041956 | | |
| **LAGUNA (98>2000)** | | | | | | | | | | |
| 2.2 dT B569 | D | 2188 | G8T | M | | | 05/98 ▸ 12/00 | 7701041956 | | |
| **LAGUNA NEVADA (95>98)** | | | | | | | | | | |
| 2.2 dT K569 | D | 2188 | G8T | M | + | | 03/96 ▸ 04/98 | 7701041956 | | |

Oil Cooler Refroidisseur d'huile Ölkühler Radiatore olio Olie Koeler Yağ soğutucu Refrigerador de aceite
Масляный охладитель olajhűtő Olejový chladič Răcitor Ulei Ψυγείο Λαδιού



• **New** Nouveau **Nuevo** Novo **Nuovo** Nieuw **Neu** Nowość **Yeni** Новый Νέο **Novy**

| | | CC | | AC | | | OE | Valeo | DIM. | TECH |
|---|---|---|---|---|---|---|---|---|---|---|
| **RENAULT (.../...)** | | | | | | | | | | |
| **LAGUNA NEVADA (98>2000)** | | | | | | | | | | |
| 2.2 dT K569 | D | 2188 | G8T | M | + | | 05/98 ▸ 12/00 | 7701041956 | | |
| **SAFRANE** | | | | | | | | | | |
| 2.0 i 16V B54L | E | 1948 | N7Q | A | | | 09/96 ▸ 04/00 | 7701042653 | 230 114 | ALB |
| 2.5 i 20V B54F | E | 2435 | N7U | A | + | | 09/96 ▸ 07/99 | 7701042657 | | |
| 2.1 Dt B546 | D | 2068 | J8S | M | | | 05/92 ▸ 09/96 | 7701035979 | 230 114 | ALB |
| 2.2 TD B54G | D | 2188 | G8T | M | + | | 09/96 ▸ 01/98 | 7701042653 | 230 114 | ALB |
| 2.2 TD B54G | D | 2188 | G8T | M | - | | 09/96 ▸ 06/97 | 7701042653 | 230 114 | ALB |
| 2.2 TD B54G | D | 2188 | G8T | M | | | 09/96 ▸ 06/97 | 7701042653 | 230 114 | ALB |
| 2.5 Dt B548 | D | 2499 | S8U | M | | | 04/93 ▸ 09/96 | 7701035979 | 230 114 | ALB |
| 2.5 Dt B548 | D | 2499 | S8U | M | | | 04/93 ▸ 09/96 | 7701042653 | 230 114 | ALB |
| 2.5 Dt B548 | D | 2499 | S8U | A | | | 04/93 ▸ 09/96 | 7701035979 | 230 114 | ALB |
| 2.5 Dt B548 | D | 2499 | S8U | A | | | 04/93 ▸ 09/96 | 7701042653 | 230 114 | ALB |
| **RENAULT** | | | | | | | | | | |
| **TRAFIC (89>94)** | | | | | | | | | | |
| 2.5 D T2B/4 ; T41/4/B ; T434 ; T554 ; T42/4 B ; T7B/4/B ; TB1/4 B ; TB34 ; TB44 ; TB54 ; TB64 ; TB2/4 B ; TC94 ; TB9/4/B ; V31/4/B ; V42/4/B ; V49 4/B ; V5B/4/B | D | 2499 | S8U | M | | | 03/89 ▸ 09/94 | 7700745281 | **816748** 150 190 | ALB |
| **TRAFIC (94>97)** | | | | | | | | | | |
| 2.5 D TB1G ; TB2G ; TB3G ; TB4G ; TB5G ; TB6G ; TB9G ; TC7G ; TC9G ; TG1G ; TH1G ; TJ1G ; V31G ; V42G ; V49G ; V5BG ; T55 7700745281 **816748** G | D | 2499 | S8U | M | | | 10/94 ▸ 08/97 | | 150 190 | ALB |
| **TRAFIC (97>2001)** | | | | | | | | | | |
| 2.5 D T7BG ; TB2G ; TB9G ; TC9M ; T55/G/M ; TCJ/G M ; TF1/G/M ; TF2/G/M ; TF3/G/M ; V31/G M ; V5B/G/M | D | 2499 | S8U | M | | | 09/97 ▸ 03/01 | 7700745281 | **816748** 150 190 | ALB |
| **SEAT** | | | | | | | | | | |
| **ALHAMBRA** | | | | | | | | | | |
| 2.0 i 7V8/355/3S5/9S5 | E | 1984 | ADY | M | | | 03/96 ▸ 05/00 | 068117021B | **817943** 94 94 | |
| 2.0 i 7V8/3S8/9S8 | E | 1984 | ADY | A | | | 03/96 ▸ 05/00 | 068117021B | **817943** 94 94 | |
| 2.8 i VR6 24V 7V9/3D3/3D7/5D3/5D7 9D3/9D7 | E | 2792 | AYL | M | | | 06/00 ▸ 05/03 | 068117021B | **817943** 94 94 | |
| 2.8 i VR6 24V 7V9/3D9/5D9/9D9 | E | 2792 | AYL | A | | | 10/01 ▸ 05/03 | 068117021B | **817943** 94 94 | |
| 1.9 TDi 7V8/3X5/9X5 | D | 1896 | 1Z,AHU | M | | | 03/96 ▸ 05/00 | 068117021B | **817943** 94 94 | |
| **ALHAMBRA II (2003>2010)** | | | | | | | | | | |
| 2.8 i VR6 24V 7V9/3D3/3D7/5D3/5D7 9D3/9D7 | E | 2792 | AYL | M | | | 06/03 ▸ 03/10 | 068117021B | **817943** 94 94 | |
| 2.8 i VR6 24V 7V9/3D9/5D9/9D9 | E | 2792 | AYL | A | | | 06/03 ▸ 03/10 | 068117021B | **817943** 94 94 | |
| **AROSA** | | | | | | | | | | |
| 1.7 SDi 6H1/074/0M4/174 | D | 1716 | AKU | M | | | 08/97 ▸ 10/03 | 068117021B | **817943** 94 94 | |
| **CORDOBA (93>96)** | | | | | | | | | | |
| 1.8 i 16V 6K2/6G1/8G1 | E | 1781 | ADL | M | | | 02/94 ▸ 06/96 | 068117021B | **817943** 94 94 | |
| 2.0 i 6K2/3H1/5H1/8H1/8L1 | E | 1984 | 2E,AGG | M | | | 09/93 ▸ 06/96 | 068117021B | **817943** 94 94 | |
| 1.9 D,1.9 SDi,1.9 TD 6K2/2N1/2X1/2X2/3T2 3E1/3K1/3Q1/3X1/3Y2/3Z2/5E1/5K1/5Q1 | D | 1896 | 1Y,AAZ,AEY | M | | | 09/93 ▸ 06/96 | 068117021B | **817943** 94 94 | |
| **CORDOBA (96>99)** | | | | | | | | | | |
| 2.0 i,2.0 i 16V 6K2/2L1/5L1/611/811 8L1 | E | 1984 | ABF,AGG | M | | | 07/96 ▸ 04/99 | 068117021B | **817943** 94 94 | |
| 1.9 D,1.9 SDi,1.9 TD 1.9 TDi 6K2/2N2/2Y2/2Z2/3E1 3N2/3Y2/3Z2/5E1/5N2 8N2 ; 6K5/2N2/2Z2/3N2/3Z2 | D | 1896 | 1Y,1Z,AAZ,AEY,AHU | M | | | 07/96 ▸ 05/99 | 068117021B | **817943** 94 94 | |
| **CORDOBA (99>2002)** | | | | | | | | | | |
| 1.9 SDi,1.9 TDi 6K2/2K6/2L6/2M6/2N6 3K6/3L6/3M6/3N6/5L6/5N6/8L6/8N6 ; 6K5/2K6 2L6/2M6/2N6/3K6/3L6/3M6/3N6/5L6/5N6 | D | 1896 | AGP,AGR,ALH,AQM | M | | | 05/99 ▸ 08/02 | 068117021B | **817943** 94 94 | |

| Type Ctr. | | CC | | AC | | | OE | Valeo | DIM. | TECH |
|---|---|---|---|---|---|---|---|---|---|---|
| **SEAT (.../...)** | | | | | | | | | | |
| **IBIZA (93>99)** | | | | | | | | | | |
| 1.8 i 16V 6K1/6G1/7G1 | E | 1781 | ADL | M | | | 02/94 ▸ 06/96 | 068117021B | **817943** | 94 94 |
| 2.0 i,2.0 i 16V 6K1/3H1/5H1/5L1/611 7H1/7L1 | E | 1984 | 2E,ABF,AGG | M | | | 02/93 ▸ 06/99 | 068117021B | **817943** | 94 94 |
| 1.9 D,1.9 SDI,1.9 TD KK13K1 ; 6K1/1N1/1X1 1.9 TDi 1Y2/1Z2/2N1/2N2/2X1 2Y2/2Z2/3E1/3K1/3N2/3Q1/3Y2/3Z2/5E1/5K1/5N2 5Q1/7E1 | D | 1896 | 1Y,1Z,AAZ,AEY,AHU | M | | | 02/93 ▸ 06/99 | 068117021B | **817943** | 94 94 |
| **IBIZA (99>2001)** | | | | | | | | | | |
| 1.9 SDi,1.9 TDi 6K1/1K6/1M6/2K6/2L6 2M6/2N6/3K6/3L6/3M6/3N6/3X6/5L6/5N6/5X6 | D | 1896 | AGP,AGR,ALH,AQM,ASV | M | | | 03/99 ▸ 11/01 | 068117021B | **817943** | 94 94 |
| **LEON I (99>2006)** | | | | | | | | | | |
| 2.8 i V6 24V 1M1/6W7/7W7 | E | 2792 | AUE,BDE | M | | | 10/00 ▸ 04/04 | 068117021B | **817943** | 94 94 |
| 1.9 SDi,1.9 TDi 1M1/204/304/344/3B4 844/8B4 | D | 1896 | AGR,ALH,AQM | M | | | 11/99 ▸ 10/05 | 068117021B | **817943** | 94 94 |
| **TOLEDO (91>98)** | | | | | | | | | | |
| 1.8 i 16V 1L25F1 | E | 1781 | PL | M | | | 02/91 ▸ 08/93 | 068117021B | **817943** | 94 94 |
| 2.0 i,2.0 i 16V 1L2/2K1/3D1/3K1/3T1 5D1/5K1/5M1/5M2/5T1/6M1/6M2/8D1/8K1/8T1 | E | 1984 | 2E,ABF,AGG | M | | | 02/91 ▸ 09/98 | 068117021B | **817943** | 94 94 |
| 2.0 i 1L2/3D2/3T2/5D2/5K2/5T2/8D2/8T2 | E | 1984 | 2E,AGG | A | | | 02/91 ▸ 09/98 | 068117021B | **817943** | 94 94 |
| 1.9 D,1.9 TD,1.9 TDi 1L2/2H1/2L1/2S1/3G1 3G2/3H1/3L1/3N1/3R1/3S1/3Z1/5R1/5Z1/8G1/8G2 8H1/8L1/8N1/8R1/8S1/8Z1 | D | 1896 | 1Y,1Z,AAZ,AFN,AHU | M | | | 02/91 ▸ 09/98 | 068117021B | **817943** | 94 94 |
| **TOLEDO (98>2004)** | | | | | | | | | | |
| 2.3 i VR5 20V 1M2/5T4/6T4 | E | 2324 | AGZ | M | | | 10/98 ▸ 11/00 | 068117021B | **817943** | 94 94 |
| 1.9 TDi 1M2/244/2B4/344/3B4 844/846/8B4 | D | 1896 | AGR,ALH,ASZ | M | | | 03/99 ▸ 07/04 | 068117021B | **817943** | 94 94 |
| **SEAT** | | | | | | | | | | |
| **INCA** | | | | | | | | | | |
| 1.7 SDi 6K9/121/221/321/421 | D | 1714 | AHB | M | | | 07/96 ▸ 09/00 | 068117021B | **817943** | 94 94 |
| 1.9 D,1.9 SDi 6K9/136/1Y1/1Z1/236 2Y1/2Z1/336/3Y1/3Z1/436/4Y1/4Z1 | D | 1896 | 1Y,AEY,AYQ | M | | | 11/95 ▸ 06/03 | 068117021B | **817943** | 94 94 |
| **SKODA** | | | | | | | | | | |
| **FELICIA (94>2001)** | | | | | | | | | | |
| 1.9 D 6U1/3H4/4H4 ; 6U61H4 ; 6U71H4 ; 6U5/3H4 4H4 ; EHH/613/614/673/679 | D | 1896 | AEF | M | | | 10/95 ▸ 12/97 | 068117021B | **817943** | 94 94 |
| **FELICIA (FACELIFT) (98>2001)** | | | | | | | | | | |
| 1.9 D 6U1/3H5/4H5 ; 6U61H5 ; 6U71H5 ; 6UFFH5 ; 6U5 3H5/4H5 | D | 1896 | AEF | M | | | 11/95 ▸ | 068117021B | **817943** | 94 94 |
| **OCTAVIA (96>2000)** | | | | | | | | | | |
| 1.9 SDi,1.9 TDi 1U2/164/264/274 374 ; 1U5/164/274/27X/374/37X/774 | D | 1896 | AGP,AGR | M | | | 10/96 ▸ 07/00 | 068117021B | **817943** | 94 94 |
| **OCTAVIA (2000>2004)** | | | | | | | | | | |
| 1.9 D,1.9 TDi 1U2/164/174/264/274 374/474 ; 1U5/164/174/264/274/27X/374/37X | D | 1896 | AGR,ALH,AQM | M | | | 08/00 ▸ 09/04 | 068117021B | **817943** | 94 94 |
| 1.9 TDi 1U2/173/273/373 473 ; 1U5/173/273/373 | D | 1896 | ALH | A | | | 08/00 ▸ 12/07 | 068117021B | **817943** | 94 94 |
| **VOLKSWAGEN** | | | | | | | | | | |
| **BORA** | | | | | | | | | | |
| 2.3 i V5 20V 1J2/0/1/2/3/5 ; 1J6 0/1/2/3/5 | E | 2324 | AGZ | M | | | 09/98 ▸ 02/01 | 068117021B | **817943** | 94 94 |
| 2.3 i V5 20V 1J2/0/1/2/3/5 ; 1J6 0/1/2/3/5 | E | 2324 | AGZ | A | | | 09/98 ▸ 02/01 | 068117021B | **817943** | 94 94 |

Oil Cooler Refroidisseur d'huile Ölkühler Radiatore olio Olie Koeler Yağ soğutucu Refrigerador de aceite
Масляный охладитель olajhűtő Olejový chladič Răcitor Ulei Ψυγείο Λαδιού



• **New** Nouveau **Nuevo** Novo **Nuovo** Nieuw **Neu** Nowość **Yeni** Новый Νέο **Novy**

| Type Ctr. | | CC | | AC | | | OE | Valeo | DIM. | TECH |
|---|---|---|---|---|---|---|---|---|---|---|

# VOLKSWAGEN (.../...)

## BORA (.../...)

| | | | | | | | | | | | |
|---|---|---|---|---|---|---|---|---|---|---|---|
| 2.8 i VR6 24V | 1J2/3/5/6 ; 1J6/3/5 6 | E | 2792 | AQP,BDE | M | | | 05/99 ▸ 05/03 | 068117021B | **817943** | 94 94 |
| 2.8 i VR6 24V | 1J2/3/5/6 ; 1J6/3/5 6 | E | 2792 | AQP,BDE | A | | | 05/99 ▸ 05/03 | 068117021B | **817943** | 94 94 |
| 1.9 SDi,1.9 TDi | 1J60 ; 1J2/0/1/2/3/5 | D | 1896 | AGP,AGR,ALH,AQM | M | | | 09/98 ▸ 05/05 | 068117021B | **817943** | 94 94 |
| 1.9 TDi | 1J2/0/1/2/3/5 | D | 1896 | AGR,ALH | A | | | 09/98 ▸ 04/02 | 068117021B | **817943** | 94 94 |

## CORRADO

| | | | | | | | | | | | |
|---|---|---|---|---|---|---|---|---|---|---|---|
| 1.8 i 16V,1.8 i G60 | 5090 | E | 1781 | KR,PG | M | | | 09/88 ▸ 07/93 | 068117021B | **817943** | 94 94 |
| 1.8 i 16V,1.8 i G60 | 5090 | E | 1781 | KR,PG | A | | | 04/89 ▸ 07/92 | 068117021B | **817943** | 94 94 |
| 2.0 i,2.0 i 16V | 5090 | E | 1984 | 2E,9A,ADY | M | | | 08/91 ▸ 07/95 | 068117021B | **817943** | 94 94 |
| 2.0 i,2.0 i 16V | 5090 | E | 1984 | 2E,9A,ADY | A | | | 08/91 ▸ 07/95 | 068117021B | **817943** | 94 94 |
| 2.9 E VR6 | 5090 | E | 2861 | ABV | M | | | 08/91 ▸ 07/95 | 068117021B | **817943** | 94 94 |
| 2.9 E VR6 | 5090 | E | 2861 | ABV | A | | | 08/91 ▸ 07/95 | 068117021B | **817943** | 94 94 |

## GOLF II (83>91)

| | | | | | | | | | | | |
|---|---|---|---|---|---|---|---|---|---|---|---|
| 1.8 G60 | 1G17 ; 1G47 | E | 1763 | 1H | M | | | 08/88 ▸ 12/89 | 068117021B | **817943** | 94 94 |
| 1.8,1.8 G60,1.8 i 16V | 1923 ; 191/0/3 N ; 193/3/N/T ; 194/1/3 ; 1G47 ; 1G1/1/2/3/5 7/J | E | 1781 | 1P,EV,GZ,HT,KR,PB,PF,PG,PL,RD RV | M | | | 01/84 ▸ 10/91 | 068117021B | **817943** | 94 94 |
| 1.8 | 1921 ; 191/1 ; 193/1/T ; 194/0/1 ; 1G1/1/2/3 5 | E | 1781 | RV | A | | | 08/87 ▸ 10/91 | 068117021B | **817943** | 94 94 |
| 1.6 TD | 1921 ; 191/0/1/2 T ; 1941 ; 193/0/1/2/7/T ; 1G1/1/2/3/5 | D | 1588 | 1V,JR,MF,RA,SB | M | | | 08/83 ▸ 07/92 | 068117021B | **817943** | 94 94 |
| 1.6 D | 1920 ; 191/0/1/2 ; 193/0/1/2 ; 194/0/2 ; 1G1 1/2/3 | D | 1588 | JP | A | | | 08/83 ▸ 10/91 | 068117021B | **817943** | 94 94 |

## GOLF II CABRIOLET (93>98)

| | | | | | | | | | | | |
|---|---|---|---|---|---|---|---|---|---|---|---|
| 2.0 i | 1E7/3/5 | E | 1984 | 2E,ADY,AGG,AKR | M | | | 09/93 ▸ 02/98 | 068117021B | **817943** | 94 94 |
| 2.0 i | 1E7/3/5 | E | 1984 | 2E,ADY,AGG | A | | | 09/93 ▸ 02/98 | 068117021B | **817943** | 94 94 |
| 1.9 TDi | 1E7/3/5 | D | 1896 | 1Z,AHU | M | | | 08/95 ▸ 02/98 | 068117021B | **817943** | 94 94 |
| 1.9 TDi | 1E7/3/5 | D | 1896 | 1Z,AHU | A | | | 08/95 ▸ 12/97 | 068117021B | **817943** | 94 94 |

## GOLF III (91>97)

| | | | | | | | | | | | |
|---|---|---|---|---|---|---|---|---|---|---|---|
| 2.0 16V,2.0 E,2.0 i | 1H33 ; 1H1/0/2/3/5 6 ; 1H5/0/2/3/5 | E | 1984 | 2E,ABF,ADY,AEP,AGG,AKR | M | | | 11/91 ▸ 04/99 | 068117021B | **817943** | 94 94 |
| 2.0 E,2.0 i | 1H1/0/2/3 ; 1H5/0/2 3 | E | 1984 | 2E,ADY,AEP,AGG | A | | | 11/91 ▸ 02/99 | 068117021B | **817943** | 94 94 |
| 2.8 VR6 | 1H16 | E | 2792 | AAA | M | | | 01/92 ▸ 12/97 | 068117021B | **817943** | 94 94 |
| 2.8 VR6 | 1H16 | E | 2792 | AAA | A | | | 07/92 ▸ 12/97 | 068117021B | **817943** | 94 94 |
| 1.9 D,1.9 D Ecomatic<br>1.9 SDi,1.9 SDi Ecomatic<br>1.9 TD,1.9 TDi | 1H1/0/2/3/5 ; 1H5/0 2/3/5 | D | 1896 | 1Y,1Z,AAZ,AEY,AHU,ALE | M | | | 11/91 ▸ 04/99 | 068117021B | **817943** | 94 94 |
| 1.9 TD,1.9 TDi | 1H1/0/2/3 ; 1H5/0/2 3/B | D | 1896 | 1Z,AAZ,AHU | A | | | 11/91 ▸ 02/99 | 068117021B | **817943** | 94 94 |

## GOLF III CABRIOLET (98>2002)

| | | | | | | | | | | | |
|---|---|---|---|---|---|---|---|---|---|---|---|
| 2.0 i | 1V73 ; 1E7/1/2/3/4/6 | E | 1984 | AGG,AKR,AWG | M | | | 03/98 ▸ 06/02 | 068117021B | **817943** | 94 94 |
| 2.0 i | 1V73 ; 1E7/1/2/3/4/6 | E | 1984 | AGG,AWF,AWG | A | | | 03/98 ▸ 06/02 | 068117021B | **817943** | 94 94 |
| 1.9 TDi | 1E7/1/2/3/4/6 | D | 1896 | AHU,ALE | M | | | 03/98 ▸ 12/01 | 068117021B | **817943** | 94 94 |

## GOLF IV (97>2003)

| | | | | | | | | | | | |
|---|---|---|---|---|---|---|---|---|---|---|---|
| 2.3 i VR5 20V | 1J1/0/1/2/3/5 6 ; 1J5/3/5 | E | 2324 | AGZ | M | | | 10/97 ▸ 02/01 | 068117021B | **817943** | 94 94 |
| 2.3 i VR5 20V | 1J1/0/1/2/3/5 ; 1J5 3/5 | E | 2324 | AGZ | A | | | 10/97 ▸ 02/01 | 068117021B | **817943** | 94 94 |
| 2.8 i V6 24V<br>2.8 i VR6 24V | 1J1/3/5/6 ; 1J5/3/5 6 | E | 2792 | AQP,AUE,BDE | M | | | 05/99 ▸ 06/05 | 068117021B | **817943** | 94 94 |
| 2.8 i V6 24V<br>2.8 i VR6 24V | 1J5/3/5/6 | E | 2792 | AQP,AUE,BDE | A | | | 05/99 ▸ 04/02 | 068117021B | **817943** | 94 94 |
| 1.9 SDi,1.9 TDi | 1J1/0/1/2/3/5 ; 1J5 0/1/2/3/5 | D | 1896 | AGP,AGR,ALH,AQM | M | | | 10/97 ▸ 05/06 | 068117021B | **817943** | 94 94 |
| 1.9 TDi | 1J1/0/1/2/3/5 ; 1J5 0/1/2/3/5 | D | 1896 | AGR,ALH | A | | | 10/97 ▸ 04/02 | 068117021B | **817943** | 94 94 |

## JETTA II (83>92)

| | | | | | | | | | | | |
|---|---|---|---|---|---|---|---|---|---|---|---|
| 1.8,1.8 i,1.8 i 16V | 165/1/2/3/N ; 167/0 1/2/3/N/T ; 168/0/3 ; 1G2/1/2/3/5 | E | 1781 | EV,GZ,KR,PB,PF,PL,RD,RV | M | | | 01/84 ▸ 10/91 | 068117021B | **817943** | 94 94 |
| 1.8 i | 1G2/1/2/3 | E | 1781 | PF,RV | A | | | 08/88 ▸ 10/91 | 068117021B | **817943** | 94 94 |

# VOLKSWAGEN (.../...)

| | | | CC | | AC | | | OE | Valeo | DIM. | TECH |
|---|---|---|---|---|---|---|---|---|---|---|---|
| **JETTA II (83>92) (.../...)** | | | | | | | | | | | |
| 1.6 D,1.6 TD | 165/0/1/2/T ; 167/0 1/2/7/T ; 168/1/2 ; 1G2/1/2/3/5 | D | 1588 | 1V,JR,MF,RA,SB | M | | | 08/83 ▸ 07/92 | 068117021B | **817943** | 94 94 |
| 1.6 D | 165/0/1/2 ; 167/0/1/2 ; 1G2/2/3 | D | 1588 | JP | A | | | 08/83 ▸ 07/90 | 068117021B | **817943** | 94 94 |
| **LUPO** | | | | | | | | | | | |
| 1.2 TDi | 6E10 ▸ 1-007 000 | D | 1191 | ANY,AYZ | M | | | 05/99 ▸ 02/01 | 068117021B | **817943** | 94 94 |
| 1.7 SDi | 6X10 | D | 1716 | AKU | M | | | 10/98 ▸ 07/05 | 068117021B | **817943** | 94 94 |
| **NEW BEETLE (98>2001)** | | | | | | | | | | | |
| 1.9 TDi | 9C13 ; 1C1/3/5/8 | D | 1896 | ALH | M | | | 11/98 ▸ 05/01 | 068117021B | **817943** | 94 94 |
| 1.9 TDi | 9C13 ; 1C1/3/5/8 | D | 1896 | ALH | A | | | 11/98 ▸ 05/01 | 068117021B | **817943** | 94 94 |
| **NEW BEETLE (2001>2005)** | | | | | | | | | | | |
| 1.9 TDi | 9C13 | D | 1896 | ALH | M | | | 06/01 ▸ 06/05 | 068117021B | **817943** | 94 94 |
| 1.9 TDi | 1C13 ; 9C13 | D | 1896 | ALH | A | | | 06/01 ▸ 06/04 | 068117021B | **817943** | 94 94 |
| **PASSAT (82>88)** | | | | | | | | | | | |
| 1.6 D,1.6 TD | 321/0/1/2/5/6 7 ; 322/5/6/7 ; 323/0/1/2/5/6/7/R/S/T ; 327 R/S/T ; 331/0/1/5/6/7/R/S/T ; 332/5/6/7 | D | 1588 | CR,CY,JK | A | | | 08/81 ▸ 04/88 | 068117021B | **817943** | 94 94 |
| **PASSAT (88>93)** | | | | | | | | | | | |
| 1.8,1.8 i,1.8 i 16V | 312/1/2/3/5 ; 315/1 2/3/5 | E | 1781 | KR,PB,PF | M | | | 04/88 ▸ 07/92 | 068117021B | **817943** | 94 94 |
| 1.8,1.8 i,1.8 i 16V | 312/1/2/3/5 ; 315/1 2/3/5 | E | 1781 | KR,PB,PF | A | | | 08/88 ▸ 07/90 | 068117021B | **817943** | 94 94 |
| 2.0,2.0 i,2.0 i 16V | 312/1/2/3/5/8 ; 315 1/2/3/5/8 | E | 1984 | 2E,9A | M | | | 04/88 ▸ 10/93 | 068117021B | **817943** | 94 94 |
| 2.0,2.0 i,2.0 i 16V | 312/1/2/3/5/8 ; 315 1/2/3/5/8 | E | 1984 | 2E,9A | A | | | 08/88 ▸ 10/93 | 068117021B | **817943** | 94 94 |
| 2.8 i,2.8 i V6 | 312/3/5/8 ; 315/3/5 8 | E | 2792 | AAA | M | | | 06/91 ▸ 10/93 | 068117021B | **817943** | 94 94 |
| 2.8 i,2.8 i V6,2.8 i VR6 | 312/3/5/8 ; 315/3/5 8 | E | 2792 | AAA | A | | | 06/91 ▸ 10/93 | 068117021B | **817943** | 94 94 |
| 1.6 TD | 312/1/2/3/5 ; 315/1 2/3/5 | D | 1588 | RA,SB | M | | | 06/88 ▸ 10/93 | 068117021B | **817943** | 94 94 |
| 1.6 TD | 312/2/3/5 ; 315/2/3 5 | D | 1588 | RA | A | | | 08/88 ▸ 07/90 | 068117021B | **817943** | 94 94 |
| 1.9 D,1.9 TD | 312/1/2/3/8 ; 315/1 2/3 | D | 1896 | 1Y,AAZ | M | | | 08/88 ▸ 10/93 | 068117021B | **817943** | 94 94 |
| 1.9 D,1.9 TD | 312/1/2/3 ; 315/1/2 3 | D | 1896 | 1Y,AAZ | A | | | 08/88 ▸ 10/93 | 068117021B | **817943** | 94 94 |
| **PASSAT (93>97)** | | | | | | | | | | | |
| 2.0 i,2.0 i 16V | 3A2/2/3/5 ; 3A5/2/3 5 | E | 1984 | 2E,ABF,ACX,ADY,AEP,AGG | M | | | 10/93 ▸ 05/97 | 068117021B | **817943** | 94 94 |
| 2.0 i | 3A2/2/3/5 ; 3A5/2/3/5 | E | 1984 | 2E,ACX,ADY,AEP,AGG | A | | | 10/93 ▸ 12/96 | 068117021B | **817943** | 94 94 |
| 2.8 i VR6 | 3A2/3/6 ; 3A5/3/6 | E | 2792 | AAA | M | | | 10/93 ▸ 12/96 | 068117021B | **817943** | 94 94 |
| 2.8 i VR6 | 3A2/3/6 ; 3A5/3/6 | E | 2792 | AAA | A | | | 10/93 ▸ 12/96 | 068117021B | **817943** | 94 94 |
| 1.9 TD,1.9 TDi | 3A2/2/3/5/A ; 3A5/2 3/5 | D | 1896 | 1Z,AAZ,AHU | M | | | 10/93 ▸ 12/96 | 068117021B | **817943** | 94 94 |
| 1.9 TDi | 3A2/2/3/5/A ; 3A5/2 3/5/A | D | 1896 | 1Z,AHU | A | | | 10/93 ▸ 12/96 | 068117021B | **817943** | 94 94 |
| **PASSAT (96>2000)** | | | | | | | | | | | |
| 1.8 i,1.8 i 20V 1.8 i Turbo 20V | 3B2/3/A ; 3B5/3/A | E | 1781 | ADR,AEB,AFY,ANB,APT,APU,ARG | M | | | 10/96 ▸ 04/99 | 068117021B | **817943** | 94 94 |
| 1.8 i,1.8 i 20V 1.8 i Turbo 20V | 3B53 ; 3B2/3/A | E | 1781 | ADR,AEB,AFY,ANB,APT,APU | A | | | 10/96 ▸ 04/00 | 068117021B | **817943** | 94 94 |
| 2.3 i VR5 20V | 3B23 ; 3B53 | E | 2324 | AGZ | M | | | 09/97 ▸ 08/00 | 068117021B | **817943** | 94 94 |
| 2.3 i VR5 20V | 3B23 ; 3B53 | E | 2324 | AGZ | A | | | 09/97 ▸ 08/00 | 068117021B | **817943** | 94 94 |
| 2.8 i V6 30V | 3B26 | E | 2771 | AQD | M | | | 01/99 ▸ 04/99 | 068117021B | **817943** | 94 94 |
| 1.9 TDi | 3B2/3/A ; 3B5/3/A | D | 1896 | AHH,AHU,ATJ | M | | | 10/96 ▸ 08/00 | 068117021B | **817943** | 94 94 |
| 1.9 TDi | 3B23 ; 3B53 | D | 1896 | AHH,AHU,AJM,ATJ | A | | | 10/96 ▸ 08/00 | 068117021B | **817943** | 94 94 |
| **POLO (94>99)** | | | | | | | | | | | |
| 2.0 i | 6V20 | E | 1984 | ADC | M | | | 08/99 ▸ 08/99 | 068117021B | **817943** | 94 94 |
| 2.0 i | 6V20 | E | 1984 | ADC | A | | | 08/99 ▸ 08/99 | 068117021B | **817943** | 94 94 |

Oil Cooler Refroidisseur d'huile Ölkühler Radiatore olio Olie Koeler Yağ soğutucu Refrigerador de aceite
Масляный охладитель olajhűtő Olejový chladič Răcitor Ulei Ψυγείο Λαδιού



• **New** Nouveau **Nuevo** Novo **Nuovo** Nieuw **Neu** Nowość **Yeni** Новый Νέο **Novy**

| Type Ctr. | | CC | | AC | | | OE | Valeo | DIM. | TECH |
|---|---|---|---|---|---|---|---|---|---|---|
| **VOLKSWAGEN (.../...)** | | | | | | | | | | |
| **POLO (94>99) (.../...)** | | | | | | | | | | |
| 1.7 SDI 6V20 ; 6V50 ; 6N1/0 | D | 1716 | AHG,AKU,AKW | M | | | 04/97 ▸ 12/99 | 068117021B | **817943** | 94 94 |
| 1.9 D,1.9 SDi,1.9 TDi 6V20 ; 6V50 ; 6N1/0 | D | 1896 | 1Y,AEF,AEY,AGD,AHU,ALE | M | | | 10/94 ▸ 12/99 | 068117021B | **817943** | 94 94 |
| **POLO (99>2001)** | | | | | | | | | | |
| 1.7 SDi 6N20 | D | 1716 | AKU | M | | | 10/99 ▸ 04/00 | 068117021B | **817943** | 94 94 |
| 1.9 D,1.9 SDi 6N2/0/1/2/3 | D | 1896 | AEF,AGD,ASX | M | | | 10/99 ▸ 09/01 | 068117021B | **817943** | 94 94 |
| **SANTANA** | | | | | | | | | | |
| 1.6 TD 3287 | D | 1588 | CY | M | | | 08/83 ▸ 07/84 | 068117021B | **817943** | 94 94 |
| 1.6 D,1.6 TD 237/7 ; 3287 ; 327/5 6/7 | D | 1588 | CR,CY,JK | A | | | 08/81 ▸ 07/84 | 068117021B | **817943** | 94 94 |
| **SCIROCCO (74>90)** | | | | | | | | | | |
| 1.8,1.8 16V 533//2/4 | E | 1781 | DX,JH,KR,KT,PL | M | | | 08/83 ▸ 07/90 | 068117021B | **817943** | 94 94 |
| **SHARAN (95>2000)** | | | | | | | | | | |
| 2.0 i 7M8/2/3/5/9 | E | 1984 | ADY | M | | | 09/95 ▸ 02/00 | 068117021B | **817943** | 94 94 |
| 2.0 i 7M8/2/3/5/9 | E | 1984 | ADY | A | | | 09/95 ▸ 02/00 | 068117021B | **817943** | 94 94 |
| 1.9 TDi 7M8/2/3/5/9 | D | 1896 | 1Z,AHU | M | | | 09/95 ▸ 02/00 | 068117021B | **817943** | 94 94 |
| **SHARAN (2000>2003)** | | | | | | | | | | |
| 2.8 i V6 7M9/2/3/5/9 | E | 2792 | AYL | M | | | 04/00 ▸ 05/03 | 068117021B | **817943** | 94 94 |
| 2.8 i V6,2.8 i VR6 7M9/2/3/5/9 | E | 2792 | AYL | A | | | 04/00 ▸ 05/03 | 068117021B | **817943** | 94 94 |
| **SHARAN (2003>2010)** | | | | | | | | | | |
| 2.8 i VR6 7M6/0/1/2/3/S/T | E | 2792 | AYL | M | | | 06/03 ▸ 03/10 | 068117021B | **817943** | 94 94 |
| 2.8 i VR6 7M6/0/1/2/3/S/T | E | 2792 | AYL | A | | | 06/03 ▸ 03/10 | 068117021B | **817943** | 94 94 |
| **VENTO** | | | | | | | | | | |
| 2.0 E 1H2/2/3/4/5 | E | 1984 | 2E,ADY,AGG | M | | | 11/91 ▸ 12/97 | 068117021B | **817943** | 94 94 |
| 2.0 E 1H2/2/3/4 | E | 1984 | 2E,ADY,AGG | A | | | 11/91 ▸ 12/97 | 068117021B | **817943** | 94 94 |
| 1.9 D,1.9 SDi,1.9 TD 1.9 TDi 1H2/2/3/4/5/B | D | 1896 | 1Y,1Z,AAZ,AEY | M | | | 11/91 ▸ 12/97 | 068117021B | **817943** | 94 94 |
| 1.9 TD,1.9 TDi 1H2/2/3/4/B | D | 1896 | 1Z,AAZ | A | | | 01/92 ▸ 07/96 | 068117021B | **817943** | 94 94 |
| **VOLKSWAGEN** | | | | | | | | | | |
| **CADDY (82>92)** | | | | | | | | | | |
| 1.8 i 147/0/7/8 ; 1AE1 ; 148/0/7/8 | E | 1781 | JH | M | | | 08/85 ▸ 07/92 | 068117021B | **817943** | 94 94 |
| 1.8 i 147/0/7/8 ; 1AE1 ; 148/0/7/8 | E | 1781 | JH | A | | | 08/85 ▸ 07/92 | 068117021B | **817943** | 94 94 |
| **CADDY (95>2004)** | | | | | | | | | | |
| 1.7 SDi 9K9/A/B | D | 1716 | AHB | M | | | 07/96 ▸ 09/00 | 068117021B | **817943** | 94 94 |
| 1.9 D,1.9 SDi,1.9 TDi 9K9/A/B | D | 1896 | 1Y,1Z,AHU,ALE,ALH,AYQ | M | | | 11/95 ▸ 06/03 | 068117021B | **817943** | 94 94 |
| **CRAFTER** | | | | | | | | | | |
| 2.5 TDi 2EA/0/1 ; 2EB/0 1 ; 2ED/0 1 ; 2EH1 ; 2EK1 ; 2EX1 ; 2EY1 ; 2EE/0 1 ; 2FC/0/1 ; 2FF/0/1 ; 2FL1 ; 2FM1 ; 2FG/0 1 ; 2FZ/0/1 | D | 2460 | BJJ,BJK,BJL | M | | | 04/06 ▸ | 068117021B | **817943** | 94 94 |
| **LT (75>96)** | | | | | | | | | | |
| 2.4 TD 281/G/K ; 291/5 6 ; 293/4/E ; 2968 ; 295/1/Z | D | 2383 | 1G,DV | M | | | 12/82 ▸ 08/92 | 068117021B | **817943** | 94 94 |
| 2.4 TD | D | 2383 | DV | | | | 08/85 ▸ 07/91 | 068117021B | **817943** | 94 94 |
| **LT II (96>2003)** | | | | | | | | | | |
| 2.5 SDi,2.5 TDI 2DA/0/1 ; 2DB/0 1 ; 2DC/0/1 ; 2DD/0/1/2 ; 2DE/0/1 ; 2DF/0/1 2 ; 2DG/0/1/2 ; 2DK1 ; 2DH/1/2 ; 2DL/1 2 ; 2DM/1/2 | D | 2460 | AGX,AHD,ANJ,APA | M | | | 05/96 ▸ 05/03 | 068117021B | **817943** | 94 94 |
| 2.5 TDI 2DA/0/1 ; 2DB/0 1 ; 2DC/0/1 ; 2DD/0/1/2 ; 2DE/0/1 ; 2DF/0/1 2 ; 2DG/0/1/2 ; 2DK1 ; 2DH/1/2 ; 2DL/1 2 ; 2DM/1/2 | D | 2461 | AVR,BBE,BBF | M | | | 09/00 ▸ 05/03 | 068117021B | **817943** | 94 94 |

# VOLKSWAGEN (.../...)

## LT III (2003>)

| | | | | | | | | | | | | |
|---|---|---|---|---|---|---|---|---|---|---|---|---|
| 2.5 TDi | 2DA/0/1 ; 2DB/0 1 ; 2DC/0/1 ; 2DD/0/1/2 ; 2DE/0/1 ; 2DF/0/1 2 ; 2DG/0/1/2 ; 2DK1 ; 2DH/1/2 ; 2DL/1 2 ; 2DM/1/2 | D | 2460 | ANJ | M | | | 06/03 ▸ 07/06 | 068117021B | **817943** | 94 | 94 |
| 2.5 TDi | 2DA/0/1 ; 2DB/0 1 ; 2DC/0/1 ; 2DD/0/1/2 ; 2DE/0/1 ; 2DF/0/1 2 ; 2DG/0/1/2 ; 2DK1 ; 2DH/1/2 ; 2DL/1 2 ; 2DM/1/2 | D | 2461 | AVR,BBE,BBF | M | | | 06/03 ▸ 07/06 | 068117021B | **817943** | 94 | 94 |

## TRANSPORTER (F24) (79>92)

| | | | | | | | | | | | | |
|---|---|---|---|---|---|---|---|---|---|---|---|---|
| 1.9 | 245/0/1 ; 246/0/1 ; 247/0/3 A ; 2510 ; 2520 ; 248/0/3 ; 253/0/1/2/3/4/5 9/0/S/T ; 254/0/2/3/4/5/9 ; 255/0/1/2/3/4 5 ; 256/0/1/2/3/4/5 | E | 1915 | DF,DG,SP | M | | | 08/82 ▸ 07/92 | 068117021B | **817943** | 94 | 94 |
| 1.9 | 245/0/1 ; 246/0/1 ; 247/0 3 ; 2510 ; 2520 ; 248/0/3 ; 253/0/1/2/3/4/5 9 ; 254/0/2/3/5/9 ; 255/0/1/2/4/5 ; 256/0/2 3 | E | 1915 | DG | A | | | 08/82 ▸ 07/92 | 068117021B | **817943** | 94 | 94 |
| 1.9 | | E | 1915 | DF,DG,EY,SP | | | | 08/82 ▸ 07/91 | 068117021B | **817943** | 94 | 94 |
| 2.1 | 245/0 ; 246/0/F/G ; 247/0/3/A/C/G/K ; 248/0 A/G/K ; 251/0/G ; 252/0/G ; 253/0/1/2/3/4/5 9/F/G/H/J/K/L/M/P/S/T ; 254/0/3/5/C/D/F/G/L M ; 255/0/1/2/3/4/5/6/F/G/H/J/K/L/M/N ; 256 0/2/3/4/5/E/F/G/K/L | E | 2109 | DJ,MV | M | | | 08/84 ▸ 07/92 | 068117021B | **817943** | 94 | 94 |
| 2.1 | | E | 2109 | DJ,MV,SR | | | | 08/85 ▸ 09/91 | 068117021B | **817943** | 94 | 94 |
| 1.6 D,1.6 TD | 245/0/1 ; 246/0 1 ; 247/0/3/A ; 2510 ; 2520 ; 248/0/3 A ; 253/0/1/2/3/4/5/7/9/S/T ; 254/0/2/3/5 9 ; 255/0/1/2/3/4/5/S/T ; 256/0/2/3/4/5 | D | 1588 | CS,JX | M | | | 05/79 ▸ 07/92 | 068117021B | **817943** | 94 | 94 |
| 1.6 TD | 2556 | D | 1588 | JX | A | | | 08/84 ▸ 07/85 | 068117021B | **817943** | 94 | 94 |
| 1.6 TD | | D | 1588 | JX | | | | 08/84 ▸ 07/91 | 068117021B | **817943** | 94 | 94 |
| 1.8 D | 245/0/1 ; 246/0/1 ; 247/0 3 ; 2510 ; 2520 ; 248/0/3 ; 253/1/2/3/4/5 9 ; 254/0/2/3/5/6 ; 255/0/1/2/3/5 ; 256/0/2 3/5 | D | 1715 | KY | M | | | 08/84 ▸ 07/92 | 068117021B | **817943** | 94 | 94 |
| 1.8 D | | D | 1715 | KY | | | | 10/86 ▸ 07/91 | 068117021B | **817943** | 94 | 94 |

## TRANSPORTER (F70) (90>96)

| | | | | | | | | | | | | |
|---|---|---|---|---|---|---|---|---|---|---|---|---|
| 2.0 | 70A/1 ; 70B/1/C/K/M ; 70E1 ; 70H1 ; 70C/2 3 ; 70J/1/C/K/M ; 70L1 ; 70M1 ; 70K/2/3 ▸ 70-N-142 686 | E | 1968 | AAC | M | | | 09/90 ▸ 06/92 | 068117021B | **817943** | 94 | 94 |
| 2.0 | 70A/1 ; 70B/1/C/K/M ; 70E1 ; 70H1 ; 70C/2 3 ; 70J/1/C/K ; 70L1 ; 70M1 ; 70K/2/3 ▸ 70-N-142 686 | E | 1968 | AAC | A | | | 09/90 ▸ 07/91 | 068117021B | **817943** | 94 | 94 |
| 2.5,2.5 i | 70A/1 ; 70B/1/C/K/M T ; 70E1 ; 70H1 ; 70C/2/3 ; 70J/1/C/K/M/T W ; 70L1 ; 70M1 ; 70K/2/3/K | E | 2460 | AAF,ACU,AEN | M | | | 09/90 ▸ 05/96 | 068117021B | **817943** | 94 | 94 |
| 2.5 | 70A/1 ; 70B/1/C/K/M/T ; 70E1 ; 70H1 ; 70C/2 3 ; 70J/1/C/K/M/T/W ; 70L1 ; 70M1 ; 70K/2/3 | E | 2460 | AAF,ACU | A | | | 10/91 ▸ 12/95 | 068117021B | **817943** | 94 | 94 |
| 1.9 D,1.9 TD | 70A/1 ; 70B/1/C/K/M T ; 70E1 ; 70H1 ; 70C/2/3 ; 70J/1/C/K/M/T W ; 70L1 ; 70M1 ; 70K/2/3 | D | 1896 | 1X,ABL | M | | | 09/90 ▸ 12/95 | 068117021B | **817943** | 94 | 94 |
| 2.4 D | 70A/1 ; 70B/1/C/K/M/T ; 70E1 ; 70H1 ; 70C/2 3 ; 70J/1/C/K/T/W ; 70L1 ; 70M1 ; 70K/2/3/K | D | 2370 | AAB | M | | | 09/90 ▸ 05/96 | 068117021B | **817943** | 94 | 94 |
| 2.4 D | 70A/1 ; 70B/1/K/M/T ; 70E1 ; 70H1 ; 70C/2 3 ; 70J/1/C/K/M/T/W ; 70L1 ; 70M1 ; 70K/2/3 | D | 2370 | AAB | A | | | 05/92 ▸ 12/95 | 068117021B | **817943** | 94 | 94 |
| 2.5 TDI | 70A/1 ; 70B/1/K/M T ; 70E1 ; 70C/2/3 ; 70H/1 3 ; 70K2 ; 70L1 ; 70M1 ; 70J/1/K/W | D | 2460 | ACV | M | | | 09/95 ▸ 12/95 | 068117021B | **817943** | 94 | 94 |

## TRANSPORTER (F7D) (96>2003)

| | | | | | | | | | | | | |
|---|---|---|---|---|---|---|---|---|---|---|---|---|
| 2.5 i | 7DA/1 ; 7DB/1/K ; 7DE1 ; 7DH1 ; 7DC/2/3/M/T U ; 7DJ/1/K ; 7DL1 ; 7DM1 ; 7DK/2/J/T | E | 2460 | AET,AEU,APL,AVT | M | | | 08/96 ▸ 06/03 | 068117021B | **817943** | 94 | 94 |
| 2.5 i | 7DA/1 ; 7DB/1/K ; 7DE1 ; 7DH1 ; 7DC/2/3/M/T U ; 7DJ/1/K ; 7DL1 ; 7DM1 ; 7DK/2/T | E | 2460 | AET,AEU,APL,AVT | A | | | 05/96 ▸ 06/03 | 068117021B | **817943** | 94 | 94 |
| 2.8 i V6 24V | 7DB1 ; 7DA 1 ; 7DE1 ; 7DH1 ; 7DJ1 ; 7DC/2/M/T U ; 7DL1 ; 7DK/2/T | E | 2792 | AMV | A | | | 05/00 ▸ 06/03 | 068117021B | **817943** | 94 | 94 |

Oil Cooler Refroidisseur d'huile Ölkühler Radiatore olio Olie Koeler Yağ soğutucu Refrigerador de aceite
Масляный охладитель olajhűtő Olejový chladič Răcitor Ulei Ψυγείο Λαδιού



• **New** Nouveau **Nuevo** Novo **Nuovo** Nieuw **Neu** Nowość **Yeni** Новый Νέο **Novy**

## TRANSPORTER (F7D) (96>2003) (.../...)

| | | CC | | AC | | | | OE | Valeo | DIM. | TECH |
|---|---|---|---|---|---|---|---|---|---|---|---|
| 1.9 TD 7DA/1 ; 7DB/1 K ; 7DE1 ; 7DH1 ; 7DC/2/3/A/G/M/T/U ; 7DJ/1 K ; 7DL1 ; 7DM1 ; 7DK/2/3/M/T/W | D | 1896 | ABL | M | | | 01/96 ▸ 06/03 | 068117021B | **817943** | 94 94 | |
| 2.4 D 7DA/1 ; 7DB/1/K ; 7DE1 ; 7DH1 ; 7DC/2/M/T U ; 7DJ/1/K ; 7DL1 ; 7DM1 ; 7DK/2/T | D | 2370 | AJA | M | | | 05/97 ▸ 06/03 | 068117021B | **817943** | 94 94 | |
| 2.4 D 7DA/1 ; 7DB/1/K ; 7DE1 ; 7DH1 ; 7DC/2/M/T U ; 7DJ/1/K ; 7DL1 ; 7DM1 ; 7DK/2/T | D | 2370 | AJA | A | | | 05/97 ▸ 06/03 | 068117021B | **817943** | 94 94 | |
| 2.5 TDi 7DA/1 ; 7DB/1 K ; 7DE1 ; 7DH1 ; 7DC/1/2/3/A/G/M/T/U ; 7DJ 1/K ; 7DL1 ; 7DM1 ; 7DK/2/3/T/W | D | 2460 | ACV,AHY,AYC | M | | | 01/96 ▸ 06/03 | 068117021B | **817943** | 94 94 | |
| 2.5 DTi,2.5 TDi 7DA/1 ; 7DB/1 K ; 7DE1 ; 7DH1 ; 7DC/2/M/T/U ; 7DJ/1 K ; 7DL1 ; 7DM1 ; 7DK/2/T | D | 2460 | ACV,AUF,AYC | A | | | 01/96 ▸ 06/03 | 068117021B | **817943** | 94 94 | |
| 2.5 TDi 7DA/1 ; 7DB/1 K ; 7DE1 ; 7DH1 ; 7DC/2/M/T/U ; 7DJ/1 K ; 7DL1 ; 7DM1 ; 7DK/2/T | D | 2461 | AJT,AXG,AYY | M | | | 05/98 ▸ 06/03 | 068117021B | **817943** | 94 94 | |

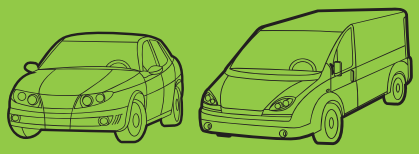

Valeo

Pour / For

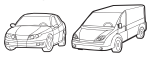

| | |
|---|---|
| **MG** | **620** |
| **RENAULT** | **620** |
| **ROVER** | **620** |

Cooling Module
Module de refroidissement
Kühlmodul
Modulo di raffreddamento
Koel Module
Soğutma modülü
Módulo completo
Модуль охлаждения
hűtő–modul
Přední modul chlazení
Modul de răcire
Ψυκτική μονάδα

| | Type Ctr. | CC | | AC | | | OE | Valeo | DIM. | TECH |
|---|---|---|---|---|---|---|---|---|---|---|
| **MG** | | | | | | | | | | |
| **MG ZS** | | | | | | | | | | |
| 1.6 i 16V | E | 1588 | 16K4F4 | M | | | 07/01 ▸ 04/05 | JRB101150 | **733076** | |
| 1.8 i 16V | E | 1796 | 18K4F | M | | | 07/01 ▸ 04/05 | JRB101150 | **733076** | |
| 1.8 i 16V | E | 1796 | 18K4F | A | | | 07/01 ▸ 04/05 | JRB101150 | **733076** | |
| 2.5 i V6 24V | E | 2497 | 25KV6-177 | M | | | 07/01 ▸ 04/05 | JRB106220 | | |
| 2.0 TD | D | 1994 | 20T2N | M | | | 05/02 ▸ 04/05 | JRB101160 | **733077** | |
| 2.0 TD | D | 1996 | 20T2N | M | | | 05/02 ▸ 04/05 | JRB101160 | **733077** | |
| **RENAULT** | | | | | | | | | | |
| **CLIO II (2001>)** | | | | | | | | | | |
| 1.6 i GNV SB0H | F | 1598 | K4M | M | | | 04/01 ▸ 12/04 | 8200211563 | **733075** | |
| 1.2 i 16V BB11 ; BB0/5 W ; BBDU ; BB2/7/T/U/V ; CB11 ; CB0/5 W ; LB11 ; CB2/7/T/U/V ; LB2/7/U/V 030324 ▸ 070328 | E | 1149 | D4F | M | + | | 04/01 ▸ 03/07 | 8200211563 | **733075** | |
| 1.2 i 16V LB2V 030324 ▸ 070328 | E | 1149 | D4F | A | + | | 03/03 ▸ 03/07 | 8200211563 | **733075** | |
| 1.4 i,1.4 i 16V BB0/B/L/P ; BB1/3/7 L ; CB0/B/L/P ; CB1/3/7/L ; LB0/3/B/K/L P ; LB1/3/7 ; LB2/A/B ; LB3/D/K | E | 1390 | K4J,K7J | M | + | | 04/01 ▸ | 8200211563 | **733075** | |
| 1.4 i 16V BB0/L/P ; BB1/3 L ; CB0/L/P ; CB1/3/L ; LB0/K/L ; LB3D ; LB2 A/B 030324 ▸ 070328 | E | 1390 | K4J | A | + | | 04/01 ▸ 03/07 | 8200211563 | **733075** | |
| 1.6 i 16V BB0/1/H/T ; BB1/4/D J/R ; BB2/6/K ; BB3/E/G/H ; CB0/1/H/T Y ; CB26 ; CB1/4/D ; LB01 ; CB3/E/G/H ; LB1 8/B/J/R/V ; LB2/6/K ; LB3/E/G/H 030324 ▸ 070328 | E | 1598 | K4M | M | + | | 04/01 ▸ 03/07 | 8200211563 | **733075** | |
| 1.6 i 16V BB2K ; BB1/4/D R ; LB1R ; LB2K ; CB1/4/D | E | 1598 | K4M | A | + | | 04/01 ▸ 03/07 | 8200211563 | **733075** | |
| **ROVER** | | | | | | | | | | |
| **25 (99>2003)** | | | | | | | | | | |
| 1.4 i 16V | E | 1396 | 14K4F4 | M | + | | 12/99 ▸ 07/04 | JRB100510 | | |
| 1.6 i 16V | E | 1588 | 16K4F4 | M | + | | 12/99 ▸ 07/04 | JRB100510 | | |
| 1.6 i 16V | E | 1588 | 16K4F4 | A | + | | 12/99 ▸ 07/04 | JRB100510 | | |
| 1.8 i 16V | E | 1796 | 18K16 | M | + | | 12/99 ▸ 07/04 | JRB100510 | | |
| 1.8 i 16V | E | 1796 | 18K16,18K4 | A | + | | 12/99 ▸ 07/04 | JRB100510 | | |
| 2.0 D | D | 1996 | 20T2N | M | + | | 12/99 ▸ 07/04 | JRB100510 | | |
| **45 (2000>2004)** | | | | | | | | | | |
| 1.4 i 16V RTC/L/W ; RTM/L W ; RTS/L/W ; RTZ/L/W | E | 1396 | 14K4F4 | M | | | 01/00 ▸ 05/04 | JRB101150 | **733076** | |
| 1.6 i 16V RTC/L/W ; RTS/L W ; RTZ/L/W | E | 1589 | 16K4F4 | M | | | 01/00 ▸ 05/04 | JRB101150 | **733076** | |
| 1.8 i 16V RTC/L/W ; RTS/L W ; RTZ/L/W | E | 1796 | 18K4F | M | | | 01/00 ▸ 05/04 | JRB101150 | **733076** | |
| 1.8 i 16V RTC/L/W ; RTS/L W ; RTZ/L/W | E | 1796 | 18K4F | A | | | 01/00 ▸ 05/04 | JRB101150 | **733076** | |
| 2.0 i V6 24V RTC/L/W ; RTZ/L/W | E | 1997 | 20K6F | M | | | 01/00 ▸ 05/04 | JRB106220 | | |
| 2.0 i V6 24V RTC/L/W ; RTZ/L/W | E | 1997 | 20K6F | A | | | 01/00 ▸ 05/04 | JRB106220 | | |
| 2.0 Di RT | D | 1994 | 20T2N | M | | | 12/02 ▸ 05/04 | JRB101160 | **733077** | |
| 2.0 iDT RTC/L/W ; RTM/L W ; RTS/L/W ; RTZ/L/W | D | 1996 | 20T2N | M | | | 01/00 ▸ 05/04 | JRB101160 | **733077** | |
| **45 (2004>)** | | | | | | | | | | |
| 1.4 i 16V RTMW ; RTSW ; RTC/L W ; RTZ/L/W | E | 1396 | 14K4F4 | M | | | 06/04 ▸ 04/05 | JRB101150 | **733076** | |
| 1.6 i 16V RTC/L/W ; RTS/L W ; RTZ/L/W | E | 1589 | 16K4F4 | M | | | 06/04 ▸ 04/05 | JRB101150 | **733076** | |
| 1.8 i 16V RTC/L/W ; RTS/L W ; RTZ/L/W | E | 1796 | 18K4F | M | | | 06/04 ▸ 04/05 | JRB101150 | **733076** | |
| 1.8 i 16V RTC/L/W ; RTS/L W ; RTZ/L/W | E | 1796 | 18K4F | A | | | 06/04 ▸ 04/05 | JRB101150 | **733076** | |
| 2.0 i V6 24V RTC/L/W ; RTZ/L/W | E | 1997 | 20K6 | M | | | 06/04 ▸ 04/05 | JRB106220 | | |

Cooling Module Module de refroidissement Kühlmodul Modulo di raffreddamento Koel Module Soğutma modülü
Módulo completo Модуль охлаждения hűtő-modul Přední modul chlazení Modul de răcire Ψυκτική μονάδα



• **New** Nouveau **Nuevo** Novo **Nuovo** Nieuw **Neu** Nowość **Yeni** Новый Νέο **Nový**

## 45 (2004>) (.../...)

| Type Ctr. | | CC | | AC | | | OE | Valeo | DIM. | TECH |
|---|---|---|---|---|---|---|---|---|---|---|
| 2.0 i V6 24V RTC/L/W ; RTZ/L/W | E | 1997 | 20K6 | A | | | 06/04 ▸ 04/05 | JRB106220 | | | |
| 2.0 Di RTMW ; RTSW ; RTC/L | D | 1994 | 20T2N | M | | | 06/04 ▸ 04/05 | JRB101160 | **733077** | | |
| 2.0 D RTC/L/W ; RTM/L/W ; RTS/L/W ; RTZ/L/W | D | 1996 | 20T2N | M | | | 06/04 ▸ 04/05 | JRB101160 | **733077** | | |

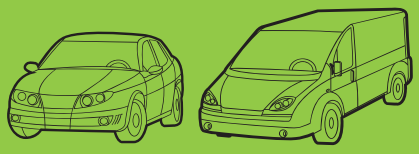

Valeo

Pour / For

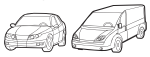


| | | | |
|---|---|---|---|
| ALFA ROMEO | 624 | MERCEDES | 628 |
| AUDI | 624 | MINI | 629 |
| BMW | 624 | NISSAN | 629 |
| CHRYSLER | 625 | OPEL | 629 |
| CITROEN | 625 | PEUGEOT | 630 |
| DACIA | 626 | PORSCHE | 631 |
| DAEWOO | 626 | RENAULT | 631 |
| FIAT | 626 | RENAULT - IRISBUS | 631 |
| FORD | 627 | RENAULT TRUCKS | 632 |
| HYUNDAI | 627 | ROVER | 632 |
| INNOCENTI | 627 | SAAB | 632 |
| IVECO | 627 | SEAT | 632 |
| IVECO TRUCKS | 627 | SKODA | 632 |
| JAGUAR | 628 | TOYOTA | 632 |
| KIA | 628 | VAUXHALL | 633 |
| LANCIA | 628 | VOLKSWAGEN | 633 |
| LAND ROVER | 628 | VOLVO | 634 |
| MAN | 628 | VOLVO TRUCKS | 634 |


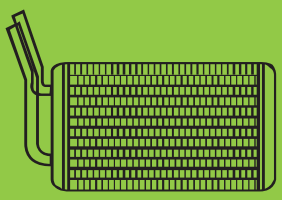

Heater Core
Radiateur de refroidissement
Heizungskühler
Radiatori di riscaldamento
Kachelradiator
Kalorifer radyatörü
Radiador de calefacción
Радиатор отопителя
fűtőradiátor
Radiátor topení
Radiator Habitaclu
Θερμαντικό Σώμα

| | A/C | | | | | OE | Valeo | DIM. | |
|---|---|---|---|---|---|---|---|---|---|
| **ALFA ROMEO** | | | | | | | | | |
| **145** | +/- | | | 09/94 ▸ 06/01 | | 60809015 | **811075** | 250 | 157 |
| **145** | +/- | | | 01/98 ▸ 06/01 | | 60779470 | **812176** | 276 | 158 |
| **146** | +/- | | | 12/94 ▸ 06/01 | | 60809015 | **811075** | 250 | 157 |
| **146** | +/- | | | 06/98 ▸ 06/01 | | 60779470 | **812176** | 276 | 158 |
| **147 (2000>)** | +/- | | | 10/00 ▸ | | 46799655 | **812278** | 260 | 184 |
| **155** | +/- | | | 03/95 ▸ 08/97 | | 60809015 | **811075** | 250 | 157 |
| **156 (97>2003)** | +/- | | | 09/97 ▸ 03/03 | | 60779298 | **812279** | 210 | 184 |
| **156 (2003>)** | +/- | | | 04/03 ▸ | | 46799655 | **812278** | 260 | 184 |
| **164 (87>98)** | +/- | | | 07/87 ▸ 09/98 | | 60805074 | **811066** | 280 | 156 |
| **166** | +/- | | | 10/98 ▸ | | 46721527 | **812400** | 280 | 160 |
| **GTV (95>2003)** | - | | | 03/95 ▸ 02/03 | | 60779451 | **812279** | 210 | 184 |
| **GTV (95>2003)** | + | | | 05/98 ▸ 02/03 | | 60779298 | **812279** | 210 | 184 |
| **Giulietta** | + | | RESISTANCE | 06/10 ▸ | | 77365588 | **812426** | | |
| **Spider (95>2003)** | +/- | | | 02/95 ▸ 02/03 | | 60809015 | **811075** | 250 | 157 |
| **Spider (2003>)** | +/- | | | 03/03 ▸ | | 60779451 | **812279** | 210 | 184 |
| **AUDI** | | | | | | | | | |
| **50** | - | | | 08/74 ▸ 07/78 | | 867819121A | **812029** | 212 | 138 |
| **80 (72>81)** | +/- | | | 03/73 ▸ 08/81 | | 171819031E | **812034** | 234 | 157 |
| **80 (81>86)** | +/- | | | 08/81 ▸ 08/86 | | 171819031E | **812034** | 234 | 157 |
| **80 (86>91)** | +/- | | | 08/86 ▸ 09/91 | | 171819031E | **812034** | 234 | 157 |
| **80 (86>91)** | +/- | | | 08/86 ▸ 08/91 | | 894819031A | **812012** | 234 | 157 |
| **80 (91>95)** | +/- | | | 09/91 ▸ 07/95 | | 894819031A | **812012** | 234 | 157 |
| **90 (84>87)** | +/- | | | 06/84 ▸ 03/87 | | 171819031E | **812034** | 234 | 157 |
| **90 (87>91)** | A+ | | | 04/87 ▸ 09/91 | | 894819031A | **812012** | 234 | 157 |
| **A2** | +/- | | | 06/00 ▸ | | 8Z0819030 | **812319** | 179 | 180 |
| **A3 (96>2003)** | +/- | | | 09/96 ▸ 07/98 | | 1H1819031B | **812030** | 234 | 157 |
| **A3 (96>2003)** | +/- | | | 09/96 ▸ 07/98 | | 1H2819031B | **812031** | 234 | 157 |
| **A3 (2003>)** | +/- | | | 05/03 ▸ | | 1K0819031B | **812254** | 235 | 190 |
| **A4 (2000>2004)** | +/- | | | 12/00 ▸ 12/04 | | 8E1820031 | **812255** | 285 | 150 |
| **A4 (2000>2004)** | +/- | | | 12/00 ▸ 12/04 | | 8E2820031 | **812256** | 285 | 150 |
| **A4 (2004>)** | +/- | | | 11/04 ▸ | | 8E1820031 | **812255** | 285 | 150 |
| **A4 (2004>)** | +/- | | | 11/04 ▸ | | 8E2820031 | **812256** | 285 | 150 |
| **A4 Cabriolet (2002>)** | +/- | | | 04/02 ▸ | | 8E1820031 | **812255** | 285 | 150 |
| **A4 Cabriolet (2002>)** | +/- | | | 04/02 ▸ | | 8E2820031 | **812256** | 285 | 150 |
| **Cabriolet** | +/- | | | 07/94 ▸ 08/00 | | 894819031A | **812012** | 234 | 157 |
| **Coupé (80>88)** | +/- | | | 10/80 ▸ 07/88 | | 171819031E | **812034** | 234 | 157 |
| **Coupé (88>96)** | +/- | | | 11/88 ▸ 01/96 | | 894819031A | **812012** | 234 | 157 |
| **Quattro** | +/- | | | 07/80 ▸ 07/91 | | 171819031E | **812034** | 234 | 157 |
| **S3 (2006>)** | +/- | | | 10/06 ▸ | | 1K0819031B | **812254** | 235 | 190 |
| **S4 (2003>)** | + | | | 03/03 ▸ 12/04 | | 8E1820031 | **812255** | 285 | 150 |
| **S4 (2003>)** | + | | | 03/03 ▸ 12/04 | | 8E2820031 | **812256** | 285 | 150 |
| **TT (2006>)** | +/- | | | 08/06 ▸ | | 1K0819031B | **812254** | 235 | 190 |
| **BMW** | | | | | | | | | |
| **1 series E81/E87** | +/- | | Type Valeo | 09/04 ▸ | | 64119128953 | **812401** | 256 | 210 |
| **3 series E21** | - | | | 01/77 ▸ 01/81 | | 64111373772 | **812238** | 264 | 132 |
| **3 series E21** | +/- | | | 01/77 ▸ 01/81 | | 64118391363 | **812296** | 224 | 152 |
| **3 series E30** | - | | | 09/82 ▸ 09/93 | | 64118391362 | **812238** | 264 | 132 |
| **3 series E30** | +/- | | | 09/82 ▸ 09/93 | | 64118391363 | **812296** | 224 | 152 |
| **3 series E36** | + | | | 12/90 ▸ 02/00 | | 64111393212 | **812240** | 190 | 155 |
| **3 series E36 Compact** | + | | | 02/94 ▸ 04/01 | | 64118373786 | **812360** | 205 | 145 |
| **3 series E46** | - | | | 03/98 ▸ | | 64118372771 | **812318** | 205 | 145 |
| **3 series E46** | + | | | 03/98 ▸ | | 64118372783 | **812220** | 206 | 135 |
| **3 series E90/E91/E92** | A+ | | Type Valeo | 03/05 ▸ | | 64119128953 | **812401** | 256 | 210 |
| **5 series E34** | - | | | 11/87 ▸ 09/96 | | 64111384725 | **883982** | 276 | 184 |
| **5 series E34** | +/- | | | 11/87 ▸ 09/96 | | 64118372523 | **812294** | 270 | 150 |
| **5 series E34** | M+ | | Type Behr | 11/87 ▸ 09/96 | | 64118351171 | **812239** | 190 | 155 |
| **7 series E32** | +/- | | | 09/86 ▸ 05/94 | | 64118372523 | **812294** | 270 | 150 |
| **7 series E38** | A+ | | | 06/94 ▸ 08/01 | | 64118373175 | **812362** | 268 | 135 |
| **7 series E65/E66** | + | | | 03/02 ▸ 02/05 | | 64116906270 | **812365** | 261 | 180 |

Heater Core Radiateur de refroidissement Heizungskühler Radiatori di riscaldamento Kachelradiator
Kalorifer radyatörü Radiador de calefacción Радиатор отопителя fűtőradiátor Radiátor topení Radiator Habitacłu Θερμαντικό Σώμα



• **New** Nouveau **Nuevo** Novo **Nuovo** Nieuw **Neu** Nowość **Yeni** Новый Νέο **Novy**

| | A/C | | | | | OE | Valeo | DIM. | |
|---|---|---|---|---|---|---|---|---|---|
| **BMW (.../...)** | | | | | | | | | |
| **8 series E31** | + | | | 09/89 ▸ 06/00 | | 64118372523 | **812294** | 270 | 150 |
| **M3 E30** | - | | | 09/86 ▸ 06/91 | | 64118391362 | **812238** | 264 | 132 |
| **M3 E30** | +/- | | | 09/86 ▸ 06/91 | | 64118391363 | **812296** | 224 | 152 |
| **M3 E36** | + | | | 06/92 ▸ 06/00 | | 64111393212 | **812240** | 190 | 155 |
| **M3 E46** | + | | | 07/00 ▸ | | 64118372783 | **812220** | 206 | 135 |
| **M5 E34** | - | | | 07/88 ▸ 09/95 | | 64111384725 | **883982** | 276 | 184 |
| **M5 E34** | + | | | 07/88 ▸ 09/95 | | 64118372523 | **812294** | 270 | 150 |
| **M5 E34** | +/- | | Type Behr | 03/92 ▸ 09/95 | | 64118351171 | **812239** | 190 | 155 |
| **X3 E83** | + | | | 10/03 ▸ | | 64118372783 | **812220** | 206 | 135 |
| **Z1 E30** | + | | | 03/89 ▸ 01/92 | | 64118391362 | **812238** | 264 | 132 |
| **CHRYSLER** | | | | | | | | | |
| **300M** | + | | | 01/98 ▸ 04/03 | | 5011078AA | **812049** | 234 | 181 |
| **LHS** | +/- | | | 01/93 ▸ | | 4644708 | **812049** | 234 | 181 |
| **Vision** | +/- | | | 10/92 ▸ | | 4644708 | **812049** | 234 | 181 |
| **CITROEN** | | | | | | | | | |
| **AX (86>91)** | +/- | | | 09/86 ▸ 05/91 | | 95230684 | **812002** | 236 | 138 |
| **AX (91>98)** | +/- | | | 05/91 ▸ 07/98 | | 96090004 | **812016** | 234 | 138 |
| **BX** | +/- | | | 09/82 ▸ 12/94 | | 95495316 | **812036** | 300 | 138 |
| **C1** | - | | 1.0i 12V | 06/05 ▸ | | 6448P1 | **812379** | | |
| **C1** | + | | 1.0i 12V | 06/05 ▸ | | 6448P2 | **812380** | | |
| **C1** | +/- | | 1.0i 12V - COLD | 06/05 ▸ | | 6448P3 | **812381** | | |
| **C1** | +/- | | 1.4 Hdi | 06/05 ▸ | | 6448P4 | **812414** | | |
| **C1** | +/- | | 1.4 Hdi | 06/05 ▸ | | 6448Q1 | **812415** | | |
| **C2** | +/- | | | 09/03 ▸ | | 6448K9 | **812234** | 250 | 140 |
| **C2** | +/- | | | 09/03 ▸ | | 6445PT | **812235** | 233 | 82 |
| **C3** | +/- | | | 04/02 ▸ | | 6448K9 | **812234** | 250 | 140 |
| **C3** | +/- | | | 04/02 ▸ | | 6445PT | **812235** | 233 | 82 |
| **C5 (2001>2004)** | +/- | | | 02/01 ▸ 08/04 | | 6448J8 | **812215** | 233 | 157 |
| **CX** | +/- | | | 03/77 ▸ 01/91 | | 75513460 | **883520** | 193 | 172 |
| **Evasion** | +/- | | | 07/94 ▸ 05/02 | | 6448A7 | **812116** | 299 | 170 |
| **Saxo** | + | | | 03/96 ▸ | | 644872 | **812016** | 234 | 138 |
| **Synergie** | +/- | | | 10/95 ▸ 05/02 | | 6448A7 | **812116** | 299 | 170 |
| **Visa** | +/- | | | 10/78 ▸ 01/88 | | 75515461 | **883468** | 200 | 175 |
| **Xantia** | +/- | | Type Valeo | 03/93 ▸ 05/02 | | 644878 | **812005** | 234 | 157 |
| **Xantia** | +/- | | Type Behr | 03/93 ▸ 05/02 | | 6448C8 | **812044** | 234 | 157 |
| **Xantia** | +/- | | Type Valeo | 03/93 ▸ 05/02 | | 644880 | **812006** | 234 | 157 |
| **XM** | +/- | | | 05/89 ▸ 07/01 | | 644889 | **812037** | 290 | 157 |
| **Xsara** | +/- | | Type Valeo | 07/97 ▸ | | 644878 | **812005** | 234 | 157 |
| **Xsara** | +/- | | Type Behr | 07/97 ▸ | | 6448C8 | **812044** | 234 | 157 |
| **Xsara** | +/- | | Type Valeo | 07/97 ▸ | | 644880 | **812006** | 234 | 157 |
| **Xsara Picasso** | +/- | | | 12/99 ▸ | | 6448G3 | **812221** | 247 | 134 |
| **ZX** | +/- | | Type Valeo | 03/91 ▸ 07/98 | | 644878 | **812005** | 234 | 157 |
| **ZX** | +/- | | Type Behr | 03/91 ▸ 07/98 | | 6448C8 | **812044** | 234 | 157 |
| **ZX** | +/- | | Type Valeo | 03/91 ▸ 07/98 | | 644880 | **812006** | 234 | 157 |
| **CITROEN** | | | | | | | | | |
| **Berlingo** | +/- | | Type Valeo | 07/96 ▸ | | 644878 | **812005** | 234 | 157 |
| **Berlingo** | +/- | | Type Valeo | 07/96 ▸ | | 644880 | **812006** | 234 | 157 |
| **C15** | +/- | | | 10/84 ▸ | | 75515461 | **883468** | 200 | 175 |
| **C25 (81>94)** | +/- | | Type Magneti Marelli | 07/90 ▸ 02/94 | | 644862 | **812337** | 243 | 177 |
| **Dispatch** | +/- | | | 09/95 ▸ | | 644880 | **812006** | 234 | 157 |
| **Jumper (94>2001)** | +/- | | | 02/94 ▸ 12/01 | | 6448F9 | **812141** | 220 | 185 |
| **Jumper (94>2001)** | +/- | | | 06/99 ▸ 12/01 | | 6448H8 | **812358** | 290 | 158 |
| **Jumper (2002>)** | +/- | | | 01/02 ▸ | | 6448H8 | **812358** | 290 | 158 |
| **Jumpy** | +/- | | | 09/95 ▸ 12/03 | | 6448A7 | **812116** | 299 | 170 |
| **Jumpy II** | +/- | | | 01/04 ▸ | | 6448A7 | **812116** | 299 | 170 |
| **Relay** | +/- | | | 02/94 ▸ 12/01 | | 6448F9 | **812141** | 220 | 185 |
| **Relay** | +/- | | | 01/02 ▸ | | 6448H8 | **812358** | 290 | 158 |

| | A/C | | | | | OE | Valeo | DIM. | |
|---|---|---|---|---|---|---|---|---|---|
| **DACIA** | | | | | | | | | |
| **Logan** | +/- | | | 09/04 ▸ | | 6001547484 | **812374** | 170 | 158 |
| **DAEWOO** | | | | | | | | | |
| **Lanos** | +/- | | | 09/97 ▸ | | 96231949 | **812335** | 182 | 168 |
| **Nubira** | +/- | | | 09/97 ▸ | | 96231949 | **812335** | 182 | 168 |
| **FIAT** | | | | | | | | | |
| **Barchetta (95>2003)** | +/- | | Type Valeo | 05/95 ▸ 06/03 | | 5893932 | **812081** | 200 | 175 |
| **Barchetta (95>2003)** | +/- | | Type Magneti Marelli | 05/95 ▸ 06/03 | | 46722095 | **812145** | 195 | 166 |
| **Barchetta (2003>)** | +/- | | Type Valeo | 07/03 ▸ | | 5893932 | **812081** | 200 | 175 |
| **Brava** | +/- | | D | 03/96 ▸ | | 46722359 | **812281** | 250 | 140 |
| **Bravo** | +/- | | D | 03/96 ▸ | | 46722359 | **812281** | 250 | 140 |
| **Bravo II (2007>)** | +/- | | | 02/07 ▸ | | 46723450 | **812329** | 220 | 156 |
| **Cinquecento** | +/- | | | 01/92 ▸ 02/98 | | 7685154 | **812303** | 230 | 140 |
| **Croma (85>96)** | +/- | | | 10/85 ▸ 12/96 | | 82420113 | **811066** | 280 | 156 |
| **Idea** | +/- | | Type Magneti Marelli | 10/03 ▸ | | 46722928 | **812280** | 209 | 159 |
| **Marea** | +/- | | D | 07/96 ▸ | | 46722359 | **812281** | 250 | 140 |
| **Marea** | +/- | | Type Valeo | 02/99 ▸ | | 71714180 | **812194** | 260 | 154 |
| **Marengo (159) (89>95)** | - | | 2 connect. | 11/89 ▸ 01/95 | | 7754065 | **812156** | 250 | 157 |
| **Marengo (159) (89>95)** | A+ | | 1 connect. | 11/89 ▸ 01/95 | | 7754068 | **811075** | 250 | 157 |
| **Marengo (185) (95>)** | +/- | | D | 01/95 ▸ | | 46722359 | **812281** | 250 | 140 |
| **Marengo (185) (95>)** | +/- | | Type Valeo | 01/99 ▸ | | 71714180 | **812194** | 260 | 154 |
| **Multipla (98>2003)** | +/- | | | 11/98 ▸ | | 71714180 | **812194** | 260 | 154 |
| **Palio** | +/- | | | 09/97 ▸ | | 7078698 | **812283** | 265 | 205 |
| **Panda** | +/- | | | 03/86 ▸ 02/91 | | 7754062 | **811065** | 185 | 175 |
| **Panda (2003>)** | +/- | | | 09/03 ▸ | | 77362540 | **812336** | 180 | 159 |
| **Punto (93>99)** | +/- | | Type Valeo | 07/93 ▸ 09/99 | | 5893932 | **812081** | 200 | 175 |
| **Punto (93>99)** | +/- | | Type Magneti Marelli | 07/93 ▸ 04/97 | | 46722095 | **812145** | 195 | 166 |
| **Punto II (99>2005)** | +/- | | Type Valeo | 07/99 ▸ 04/05 | | 46723042 | **812211** | 209 | 159 |
| **Punto II (99>2005)** | +/- | | Type Magneti Marelli | 07/99 ▸ 04/05 | | 46722928 | **812280** | 209 | 159 |
| **Seicento** | +/- | | | 03/98 ▸ | | 46722587 | **812383** | 215 | 159 |
| **Siena** | +/- | | | 11/97 ▸ | | 7078698 | **812283** | 265 | 205 |
| **Stilo (2001>)** | +/- | | | 09/01 ▸ | | 46723450 | **812329** | 220 | 156 |
| **Tempra** | - | | 2 connect. | 11/89 ▸ 01/96 | | 7754065 | **812156** | 250 | 157 |
| **Tempra** | +/- | | 1 connect. | 11/89 ▸ 01/96 | | 7754068 | **811075** | 250 | 157 |
| **Tipo** | - | | 2 connect. | 01/88 ▸ 10/95 | | 7754065 | **812156** | 250 | 157 |
| **Tipo** | +/- | | 1 connect. | 01/88 ▸ 10/95 | | 7754068 | **811075** | 250 | 157 |
| **Ulysse (94>2002)** | +/- | | | 06/94 ▸ 08/02 | | 9566944680 | **812116** | 299 | 170 |
| **Ulysse (2002>)** | +/- | | | 09/02 ▸ | | 9464420380 | **812395** | 250 | 180 |
| **Uno (83>95)** | +/- | | | 01/83 ▸ 08/95 | | 7754055 | **811397** | 216 | 157 |
| **Uno Mondo (98>)** | +/- | | | 01/98 ▸ | | 7753630 | **811397** | 216 | 157 |
| **FIAT** | | | | | | | | | |
| **Doblo (2000>2004)** | +/- | | Type Valeo | 10/00 ▸ 12/03 | | 46723042 | **812211** | 209 | 159 |
| **Doblo (2000>2004)** | +/- | | Type Magneti Marelli | 10/00 ▸ 12/03 | | 46722928 | **812280** | 209 | 159 |
| **Doblo (2004>)** | +/- | | Type Magneti Marelli | 01/04 ▸ | | 46722928 | **812280** | 209 | 159 |
| **Doblo Cargo (2004>)** | +/- | | Type Magneti Marelli | 01/04 ▸ | | 46722928 | **812280** | 209 | 159 |
| **Ducato (81>94)** | - | | Type Magneti Marelli | 09/90 ▸ 01/94 | | 7661840 | **812337** | 243 | 177 |
| **Ducato (94>99)** | +/- | | | 02/94 ▸ 06/99 | | 1321309080 | **812141** | 220 | 185 |
| **Ducato (99>)** | +/- | | | 06/99 ▸ | | 46722710 | **812358** | 290 | 158 |
| **Duna** | +/- | | | 03/87 ▸ 12/91 | | 7754055 | **811397** | 216 | 157 |
| **Fiorino (146) (88>)** | +/- | | | 03/88 ▸ 06/93 | | 7754055 | **811397** | 216 | 157 |
| **Scudo (95>2006)** | +/- | | | 07/95 ▸ 12/06 | | 9566944680 | **812116** | 299 | 170 |
| **Scudo II (2007>)** | +/- | | | 01/07 ▸ | | 9464420380 | **812395** | 250 | 180 |
| **Strada Pick Up** | +/- | | | 03/99 ▸ 03/03 | | 7078698 | **812283** | 265 | 205 |
| **Talento** | +/- | | | 03/88 ▸ 01/94 | | 7661840 | **812337** | 243 | 177 |

Heater Core Radiateur de refroidissement Heizungskühler Radiatori di riscaldamento Kachelradiator
Kalorifer radyatörü Radiador de calefacción Радиатор отопителя fűtőradiátor Radiátor topení Radiator Habitaclu Θερμαντικό Σώμα



• **New** Nouveau **Nuevo** Novo **Nuovo** Nieuw **Neu** Nowość **Yeni** Новый Νέο **Nový**

| | A/C | | | | | OE | Valeo | DIM. | |
|---|---|---|---|---|---|---|---|---|---|
| **FORD** | | | | | | | | | |
| **Cougar** | +/- | | | 09/98 ▸ 02/01 | | 1114283 | **812275** | 240 | 156 |
| **Escort (90>94)** | +/- | | | 09/90 ▸ 12/94 | | 6183117 | **812058** | 265 | 134 |
| **Escort (90>94)** | +/- | | RS Cosworth | 03/92 ▸ 12/94 | | 1041092 | **812129** | 241 | 137 |
| **Escort (95>2001)** | +/- | | | 01/95 ▸ 09/01 | | 6183117 | **812058** | 265 | 134 |
| **Escort (95>2001)** | +/- | | RS Cosworth | 08/95 ▸ 12/95 | | 1041092 | **812129** | 241 | 137 |
| **Fiesta (83>89)** | +/- | | | 08/83 ▸ 01/89 | | 6114258 | **812053** | 180 | 152 |
| **Fiesta (89>95)** | +/- | | | 02/89 ▸ 07/95 | | 6775553 | **812057** | 198 | 150 |
| **Fiesta (95>2002)** | +/- | | | 08/95 ▸ 03/02 | | 1011670 | **812272** | 247 | 207 |
| **Fiesta (2002>)** | +/- | | | 03/02 ▸ 10/05 | | 1206926 | **812320** | 192 | 147 |
| **Fiesta (2005>)** | +/- | | | 10/05 ▸ | | 1206926 | **812320** | 192 | 147 |
| **Focus (98>2004)** | +/- | | | 10/98 ▸ 08/04 | | 1062254 | **812273** | 190 | 196 |
| **Focus (98>2004)** | +/- | | | 10/98 ▸ 08/04 | | 1062256 | **812274** | 190 | 196 |
| **Focus (2004>)** | +/- | | | 09/04 ▸ | | 1317081 | **812367** | 238 | 180 |
| **Focus II (2007>)** | +/- | | | 12/07 ▸ | | 1317081 | **812367** | 238 | 180 |
| **Focus C-Max (03>07)** | +/- | | | 06/03 ▸ | | 1317081 | **812367** | 238 | 180 |
| **Focus C-Max (2007>)** | +/- | | | 02/07 ▸ | | 1317081 | **812367** | 238 | 180 |
| **Focus Coupé Cabriolet (2006>)** | +/- | | | 07/06 ▸ | | 1317081 | **812367** | 238 | 180 |
| **Fusion** | +/- | | | 06/02 ▸ | | 1206926 | **812320** | 192 | 147 |
| **Fusion (2005>)** | +/- | | | 10/05 ▸ | | 1206926 | **812320** | 192 | 147 |
| **Galaxy (95>2006)** | +/- | | | 05/95 ▸ | | 7291900 | **812324** | 262 | 154 |
| **Galaxy (95>2006)** | +/- | | Rear | 05/95 ▸ | | 7204831 | **812361** | 171 | 149 |
| **Granada (85>91)** | +/- | | | 05/85 ▸ 12/91 | | 1041092 | **812129** | 241 | 137 |
| **Ka** | +/- | | | 09/96 ▸ 01/00 | | 1011670 | **812272** | 247 | 207 |
| **Kuga** | +/- | | | 04/08 ▸ | | 1317081 | **812367** | 238 | 180 |
| **Mondeo (96>)** | +/- | | | 08/96 ▸ | | 1114283 | **812275** | 240 | 156 |
| **Orion (90>93)** | +/- | | | 09/90 ▸ 09/93 | | 6183117 | **812058** | 265 | 134 |
| **Puma** | + | | | 05/97 ▸ 01/01 | | 1011670 | **812272** | 247 | 207 |
| **Scorpio (85>94)** | +/- | | | 03/85 ▸ 10/94 | | 1652127 | **812129** | 241 | 137 |
| **Scorpio (94>98)** | +/- | | | 10/94 ▸ | | 1041092 | **812129** | 241 | 137 |
| **Sierra (82>93)** | +/- | | | 08/82 ▸ 01/93 | | 1652127 | **812129** | 241 | 137 |
| **FORD** | | | | | | | | | |
| **Courrier (91>96)** | +/- | | | 08/91 ▸ 09/96 | | 6775553 | **812057** | 198 | 150 |
| **Transit (95>99)** | - | | | 09/94 ▸ 12/99 | | 7110379 | **812276** | 245 | 152 |
| **Transit (95>99)** | + | | | 09/94 ▸ 12/99 | | 7121563 | **812277** | 245 | 152 |
| **Transit (2000>)** | - | | | 01/00 ▸ | | 4042575 | **812332** | 247 | 146 |
| **Transit (2000>)** | + | | | 01/00 ▸ | | 4166487 | **812364** | 247 | 146 |
| **HYUNDAI** | | | | | | | | | |
| **Accent** | +/- | | | 07/94 ▸ 01/03 | | 9722122000 | **812409** | 195 | 170 |
| **Atos** | +/- | | | 01/98 ▸ | | 9712302000 | **812396** | 172 | 170 |
| **Coupé** | +/- | | | 05/96 ▸ 12/01 | | 9722122001 | **812409** | 195 | 170 |
| **Lantra** | +/- | | | 05/95 ▸ 07/00 | | 9722122000 | **812409** | 195 | 170 |
| **INNOCENTI** | | | | | | | | | |
| **Elba** | +/- | | | 04/91 ▸ | | 7753630 | **811397** | 216 | 157 |
| **IVECO** | | | | | | | | | |
| **Daily II (1989>1996)** | | | | 1989 ▸ 03/96 | | 93930678 | **812342** | 298 | 160 |
| **Daily IV (1999>)** | | | | 05/99 ▸ | | 504026720 | **812340** | 214 | 263 |
| **Daily IV (1999>)** | | | | 05/99 ▸ | | 500344178 | **812341** | 214 | 263 |
| **IVECO TRUCKS** | | | | | | | | | |
| **Eurocargo** | - | | | 06/91 ▸ | | 98418409 | **812132** | 295 | 175 |
| **Eurofire** | | | | 06/91 ▸ | | 98418409 | **812132** | 295 | 175 |
| **Eurostar** | | | | 09/92 ▸ | | 98430072 | **812133** | 400 | 175 |
| **Eurostar LD** | | | | 09/92 ▸ 04/95 | | 98430072 | **812133** | 400 | 175 |
| **Eurotech** | | | -> 433405 | 09/92 ▸ | | 98430072 | **812133** | 400 | 175 |

| | A/C | | | | | OE | Valeo | DIM. | |
|---|---|---|---|---|---|---|---|---|---|
| **IVECO TRUCKS (.../...)** | | | | | | | | | |
| **Eurotrakker** | | | | 09/92 ▸ | | 98430072 | **812133** | 400 | 175 |
| **115** | | | | | | 93156374 | **812047** | 260 | 193 |
| **135** | | | | | | 93156374 | **812047** | 260 | 193 |
| **145** | | | | | | 93156374 | **812047** | 260 | 193 |
| **175** | | | | 09/87 ▸ | | 93156374 | **812047** | 260 | 193 |
| **190** | | | | | | 93158460 | **812075** | 390 | 175 |
| **190** | | | | 09/87 ▸ | | 93156374 | **812047** | 260 | 193 |
| **220** | | | | | | 93158460 | **812075** | 390 | 175 |
| **240** | | | | | | 93158460 | **812075** | 390 | 175 |
| **260** | | | | | | 93158460 | **812075** | 390 | 175 |
| **360** | | | | | | 93158460 | **812075** | 390 | 175 |
| **440** | | | | | | 93158460 | **812075** | 390 | 175 |
| **OM-Zeta** | | | | 01/73 ▸ 1991 | | 93156374 | **812047** | 260 | 193 |
| **JAGUAR** | | | | | | | | | |
| **XJ (68>73)** | +/- | | 6 cyl. | 11/68 ▸ 09/94 | | JLM11343 | **812072** | 232 | 79 |
| **Sovereign** | +/- | | 6 cyl. | 01/84 ▸ | | JLM11343 | **812072** | 232 | 79 |
| **KIA** | | | | | | | | | |
| **Carnival** | +/- | | | 01/99 ▸ 04/01 | | 0K55261H01 | **812411** | 185 | 163 |
| **Carnival** | +/- | | | 05/01 ▸ 02/06 | | 0K55261H01A | **812412** | 185 | 163 |
| **Rio** | +/- | | | 07/00 ▸ 05/05 | | 0K30C61A10 | **812410** | 169 | 162 |
| **LANCIA** | | | | | | | | | |
| **Kappa** | +/- | | | 10/94 ▸ 10/01 | | 60815099 | **812400** | 280 | 160 |
| **Dedra (89>94)** | +/- | | 1 connect. | 03/89 ▸ 06/94 | | 7754068 | **811075** | 250 | 157 |
| **Dedra (94>99)** | - | | 2 connect. | 07/94 ▸ 09/99 | | 7754065 | **812156** | 250 | 157 |
| **Dedra (94>99)** | + | | 1 connect. | 07/94 ▸ 09/99 | | 7754068 | **811075** | 250 | 157 |
| **Delta (93>99)** | +/- | | 1 connect. | 03/93 ▸ 08/99 | | 7754068 | **811075** | 250 | 157 |
| **Musa** | +/- | | Type Magneti Marelli | 07/04 ▸ | | 46722928 | **812280** | 209 | 159 |
| **Phedra** | +/- | | | 09/02 ▸ | | 9464420380 | **812395** | 250 | 180 |
| **Thema** | +/- | | | 10/84 ▸ 11/94 | | 82420113 | **811066** | 280 | 156 |
| **Y (2000>2003)** | +/- | | Type Magneti Marelli | 09/00 ▸ 09/03 | | 46722928 | **812280** | 209 | 159 |
| **Ypsilon (2003>)** | +/- | | Type Magneti Marelli | 10/03 ▸ | | 46722928 | **812280** | 209 | 159 |
| **Y10** | +/- | | | 01/89 ▸ 09/92 | | 7684054 | **812334** | 228 | 139 |
| **Zeta** | +/- | | | 10/94 ▸ 08/02 | | 9566944680 | **812116** | 299 | 170 |
| **LAND ROVER** | | | | | | | | | |
| **Freelander** | +/- | | | 10/97 ▸ 12/01 | | JEF100150 | **812268** | 235 | 120 |
| **MAN** | | | | | | | | | |
| **F 2000** | +/- | | | 01/94 ▸ | | 81619010067 | **812350** | 370 | 190 |
| **F 90** | +/- | | | 01/86 ▸ | | 81619010064 | **812351** | 370 | 190 |
| **L 2000** | +/- | | | 10/93 ▸ | | 81619010065 | **812346** | 365 | 190 |
| **M 2000** | | | | 01/96 ▸ | | 81619010065 | **812346** | 365 | 190 |
| **M 90** | | | | 10/93 ▸ | | 81619010064 | **812351** | 370 | 190 |
| **TG-A** | +/- | | | 04/00 ▸ | | 81619016166 | **812352** | 370 | 190 |
| **MERCEDES** | | | | | | | | | |
| **190 (201)** | +/- | | | 12/82 ▸ 01/93 | | 0028355401 | **812084** | 300 | 156 |
| **A Class (169) (2004>)** | +/- | | | 07/04 ▸ | | 1698300761 | **818205** | | |
| **B Class (2005>)** | +/- | | | 05/05 ▸ | | 1698300761 | **818205** | | |
| **C Class (203) (2000>)** | +/- | | | 04/00 ▸ | | 2038300161 | **812321** | 235 | 180 |
| **CLK (209)** | + | | | 03/02 ▸ | | 2038300161 | **812321** | 235 | 180 |
| **CL Class (215)** | + | | | 08/99 ▸ | | 2208300261 | **812366** | 239 | 189 |
| **E Class (124)** | A+ | | | 07/93 ▸ 03/98 | | 0028355501 | **812304** | 217 | 207 |
| **S Class (126)** | +/- | | | 09/79 ▸ 12/91 | | 0028353101 | **812299** | 216 | 210 |

Heater Core Radiateur de refroidissement Heizungskühler Radiatori di riscaldamento Kachelradiator
Kalorifer radyatörü Radiador de calefacción Радиатор отопителя fűtőradiátor Radiator topení Radiator Habitacłu Θερμαντικό Σώμα



• **New** Nouveau **Nuevo** Novo **Nuovo** Nieuw **Neu** Nowość **Yeni** Новый Νέο **Nový**

| | A/C | | | | | OE | Valeo | DIM. | |
|---|---|---|---|---|---|---|---|---|---|
| **MERCEDES (.../...)** | | | | | | | | | |
| **S Class (220)** | + | | | 09/98 ▸ | | 2208300261 | **812366** | 239 | 189 |
| **V Class (638/2)** | +/- | | | 10/96 ▸ 12/02 | | 0038350001 | **812134** | 345 | 182 |
| **MERCEDES** | | | | | | | | | |
| **Sprinter (95>)** | +/- | | | 02/95 ▸ | | 0038353501 | **812251** | 170 | 152 |
| **Vito (96>2003)** | +/- | | | 01/96 ▸ 09/03 | | 0038350001 | **812134** | 345 | 182 |
| **MERCEDES** | | | | | | | | | |
| **O 302** | | | | | | 0008356601 | **812353** | 370 | 227 |
| **MERCEDES** | | | | | | | | | |
| **LP** | | | | ▸ 1974 | | 0018358301 | **812348** | 170 | 190 |
| **LP** | | | | 1980 ▸ | | 0018359201 | **812347** | 320 | 170 |
| **MK** | | | | 03/87 ▸ 09/96 | | 0028356801 | **812354** | 390 | 225 |
| **NG** | | | 12V | 08/73 ▸ 11/91 | | 0028350801 | **812356** | 360 | 170 |
| **NG** | | | 24V | 08/73 ▸ 11/91 | | 0028350901 | **812357** | 360 | 170 |
| **SK** | | | | 09/87 ▸ | | 0028356801 | **812354** | 390 | 225 |
| **MINI** | | | | | | | | | |
| **MINI (R56) (2006>)** | + | | | 11/06 ▸ | | 64113422666 | **812382** | | |
| **NISSAN** | | | | | | | | | |
| **Micra (K11) (92>2002)** | +/- | | | 08/92 ▸ 12/02 | | 2714098B10 | **812107** | 154 | 185 |
| **Micra (K12) (2003>)** | +/- | | | 01/03 ▸ | | 27140AX700 | **812250** | 171 | 167 |
| **Micra (K12) (2003>)** | +/- | | CTP 1500W | 01/03 ▸ | | 27143AX00 | **812249** | 172 | 98 |
| **Primera (P10) (90>2001)** | +/- | | | 02/90 ▸ 02/02 | | 5658030101 | **812108** | 190 | 152 |
| **Sunny (N14/Y10) (90>95)** | +/- | | | 10/90 ▸ 12/96 | | 2714061J15 | **812108** | 190 | 152 |
| **NISSAN** | | | | | | | | | |
| **Primastar** | +/- | | | 09/02 ▸ | | 7701473279 | **812375** | 265 | 149 |
| **OPEL** | | | | | | | | | |
| **Astra F (91>98)** | +/- | | Type Delphi | 03/91 ▸ 02/01 | | 1806116 | **812146** | 182 | 190 |
| **Astra G (98>)** | - | | Type Delphi | 09/98 ▸ | | 1806002 | **812146** | 182 | 190 |
| **Astra G (98>)** | +/- | | Type Behr | 02/98 ▸ 08/00 | | 1618142 | **812222** | 210 | 180 |
| **Astra G (98>)** | +/- | | Type Delphi | 02/98 ▸ 12/01 | | 1618206 | **812285** | 210 | 184 |
| **Astra G (98>)** | +/- | | Type Delphi | 01/02 ▸ | | 1618134 | **812284** | 210 | 184 |
| **Calibra** | +/- | | Type Delphi | 09/89 ▸ 07/97 | | 1806002 | **812146** | 182 | 190 |
| **Corsa A (82>93)** | +/- | | | 10/82 ▸ 03/93 | | 1806108 | **812148** | 190 | 159 |
| **Corsa B (93>2000)** | +/- | | | 03/93 ▸ 08/00 | | 1618020 | **812149** | 190 | 159 |
| **Corsa C (2000>2006)** | +/- | | | 09/00 ▸ 06/06 | | 1618222 | **812225** | 167 | 171 |
| **Corsa D (2006>)** | - | | | 07/06 ▸ | | 1618288 | **812363** | 180 | 165 |
| **Frontera** | | | | 10/91 ▸ 09/98 | | 1806124 | **812077** | | |
| **Kadett E (84>91)** | - | | | 08/84 ▸ 01/91 | | 1806110 | **812150** | 190 | 182 |
| **Meriva** | +/- | | | 05/03 ▸ | | 1618288 | **812363** | 180 | 165 |
| **Omega A (86>94)** | +/- | | | 10/86 ▸ 02/94 | | 1618044 | **812110** | 239 | 158 |
| **Omega B (94>)** | +/- | | | 02/94 ▸ 07/03 | | 1618248 | **812126** | 250 | 182 |
| **Signum** | +/- | | | 06/03 ▸ | | 1618260 | **812253** | 185 | 169 |
| **Senator B (87>93)** | +/- | | | 02/87 ▸ 08/93 | | 1618044 | **812110** | 239 | 158 |
| **Tigra (94>2003)** | +/- | | | 10/94 ▸ 01/01 | | 1618020 | **812149** | 190 | 159 |
| **Tigra TwinTop (2004>)** | +/- | | | 07/04 ▸ | | 1618222 | **812225** | 167 | 171 |
| **Vectra A** | +/- | | Type Delphi | 09/88 ▸ 09/95 | | 1806002 | **812146** | 182 | 190 |
| **Vectra B** | - | | | 02/99 ▸ 06/03 | | 1843107 | **812117** | 205 | 181 |
| **Vectra B** | + | | | 10/95 ▸ 06/03 | | 1618110 | **812118** | 250 | 182 |
| **Vectra C** | +/- | | | 04/02 ▸ | | 1618260 | **812253** | 185 | 169 |
| **Zafira** | +/- | | Type Behr | 01/99 ▸ | | 1618142 | **812222** | 210 | 180 |

| | A/C | | | | | OE | Valeo | DIM. | |
|---|---|---|---|---|---|---|---|---|---|
| **OPEL** | | | | | | | | | |
| **Combo (85>93)** | +/- | | | 07/85 ▸ 03/93 | | 1806110 | **812150** | 190 | 182 |
| **Combo (93>2001)** | +/- | | | 03/93 ▸ 09/01 | | 1618020 | **812149** | 190 | 159 |
| **Combo (2001>)** | +/- | | | 10/01 ▸ | | 1618222 | **812225** | 167 | 171 |
| **Vivaro** | +/- | | | 05/01 ▸ | | 4409453 | **812375** | 265 | 149 |
| **PEUGEOT** | | | | | | | | | |
| **106 (91>96)** | +/- | | Type Valeo | 09/91 ▸ 03/96 | | 644872 | **812016** | 234 | 138 |
| **106 (91>96)** | +/- | | Type Behr | 09/91 ▸ 03/96 | | 644875 | **812114** | 239 | 139 |
| **106 (96>2003)** | +/- | | Type Valeo | 03/96 ▸ 07/03 | | 644872 | **812016** | 234 | 138 |
| **106 (96>2003)** | +/- | | Type Behr | 03/96 ▸ 07/03 | | 644875 | **812114** | 239 | 139 |
| **107** | - | | 1.0i 12V | 06/05 ▸ | | 6448P1 | **812379** | | |
| **107** | + | | 1.0i 12V | 06/05 ▸ | | 6448P2 | **812380** | | |
| **107** | +/- | | 1.0i 12V - COLD | 06/05 ▸ | | 6448P3 | **812381** | | |
| **107** | +/- | | 1.4 Hdi | 06/05 ▸ | | 6448P4 | **812414** | | |
| **107** | +/- | | 1.4 Hdi | 06/05 ▸ | | 6448Q1 | **812415** | | |
| **1007** | +/- | | | 04/05 ▸ | | 6445PT | **812235** | 233 | 82 |
| **1007** | +/- | | | 04/05 ▸ | | 6448K9 | **812234** | 250 | 140 |
| **205** | +/- | | Type Valeo | 02/83 ▸ 09/98 | | 6448G2 | **883965** | 234 | 138 |
| **205** | +/- | | Type Behr | 02/83 ▸ 09/98 | | 644851 | **812399** | 234 | 138 |
| **206** | +/- | | | 09/98 ▸ | | 6448G3 | **812221** | 247 | 134 |
| **206 CC** | +/- | | | 10/00 ▸ | | 6448G3 | **812221** | 247 | 134 |
| **206 SW** | +/- | | | 05/02 ▸ | | 6448G3 | **812221** | 247 | 134 |
| **207** | +/- | | | 03/06 ▸ | | 6448P9 | **812378** | 245 | 158 |
| **207** | +/- | | | 03/06 ▸ | | 6445PT | **812235** | 233 | 82 |
| **306 (93>)** | +/- | | Type Valeo | 02/93 ▸ 09/02 | | 644878 | **812005** | 234 | 157 |
| **306 (93>)** | +/- | | Type Behr | 02/93 ▸ 09/02 | | 6448C8 | **812044** | 234 | 157 |
| **306 (93>)** | +/- | | Type Valeo | 02/93 ▸ 09/02 | | 644880 | **812006** | 234 | 157 |
| **307 (2001>2004)** | A+ | | Type Behr | 03/01 ▸ | | 6448K0 | **812322** | 242 | 135 |
| **307 (2001>2004)** | M+ | | Gasoline | 03/01 ▸ | | 6448K3 | **812338** | 249 | 141 |
| **307 (2001>2004)** | M+ | | Hdi | 03/01 ▸ | | 6448K4 | **812339** | 249 | 130 |
| **308** | +/- | | | 09/07 ▸ 09/09 | | 6448S4 | **812416** | | |
| **308** | +/- | | | 10/09 ▸ | | 6448V6 | **812417** | | |
| **309 (85>94)** | +/- | | Type Valeo | 08/85 ▸ 08/94 | | 6448G2 | **883965** | 234 | 138 |
| **309 (85>94)** | +/- | | Type Behr | 08/85 ▸ 08/94 | | 644851 | **812399** | 234 | 138 |
| **405 (87>96)** | +/- | | Type Valeo Ipra | 06/87 ▸ 10/96 | | 644877 | **883976** | 250 | 157 |
| **405 (87>96)** | +/- | | Type Behr | 06/87 ▸ 10/96 | | 644874 | **812115** | 248 | 157 |
| **405 (87>92)** | +/- | | Connecting Hose | 06/87 ▸ 06/92 | | 6464C8 | **508555** | 250 | 158 |
| **406 (95>99)** | +/- | | Type Valeo Ipra | 10/95 ▸ 06/98 | | 644877 | **883976** | 250 | 157 |
| **406 (95>)** | +/- | | | 06/98 ▸ 04/04 | | 6448G9 | **812181** | 282 | 181 |
| **406 (95>99)** | +/- | | Type Behr | 10/95 ▸ 04/99 | | 644874 | **812115** | 248 | 157 |
| **406 Break (99>)** | +/- | | | 01/00 ▸ | | 6448G9 | **812181** | 282 | 181 |
| **406 Coupé (97>)** | +/- | | | 05/99 ▸ | | 6448G9 | **812181** | 282 | 181 |
| **504** | +/- | | | 08/70 ▸ 09/93 | | 644855 | **883737** | 193 | 150 |
| **505** | +/- | | | 05/79 ▸ 01/90 | | 644854 | **883674** | 250 | 156 |
| **508** | + | | | 01/11 ▸ | | 6448W9 | **812424** | | |
| **605 (89>99)** | +/- | | | 10/89 ▸ 05/99 | | 644889 | **812037** | 290 | 157 |
| **607 (2000>2004)** | + | | | 05/00 ▸ 09/04 | | 6448J6 | **812212** | 289 | 157 |
| **806 (94>2002)** | +/- | | | 07/94 ▸ 05/02 | | 6448A7 | **812116** | 299 | 170 |
| **PEUGEOT** | | | | | | | | | |
| **Boxer (94>2001)** | +/- | | | 02/94 ▸ 12/01 | | 6448F9 | **812141** | 220 | 185 |
| **Boxer (94>)** | +/- | | | 06/99 ▸ | | 6448H8 | **812358** | 290 | 158 |
| **Expert** | +/- | | | 09/95 ▸ 12/03 | | 6448A7 | **812116** | 299 | 170 |
| **Expert II** | +/- | | | 01/04 ▸ | | 6448A7 | **812116** | 299 | 170 |
| **J5** | - | | Type Magneti Marelli | 09/90 ▸ 02/94 | | 644862 | **812337** | 243 | 177 |
| **P4** | | | | 01/86 ▸ | | 644855 | **883737** | 193 | 150 |
| **Partner (96>)** | +/- | | Type Valeo | 06/96 ▸ | | 644878 | **812005** | 234 | 157 |
| **Partner (96>)** | +/- | | Type Valeo | 06/96 ▸ | | 644880 | **812006** | 234 | 157 |
| **Ranch (96>)** | +/- | | Type Valeo | 06/96 ▸ | | 644878 | **812005** | 234 | 157 |

Heater Core Radiateur de refroidissement Heizungskühler Radiatori di riscaldamento Kachelradiator Kalorifer radyatörü Radiador de calefacción Радиатор отопителя fűtőradiátor Radiátor topení Radiator Habitacłu Θερμαντικό Σώμα



• **New** Nouveau **Nuevo** Novo **Nuovo** Nieuw **Neu** Nowość **Yeni** Новый Νέο **Nový**

| | A/C | | | | | OE | Valeo | DIM. | |
|---|---|---|---|---|---|---|---|---|---|
| **PORSCHE** | | | | | | | | | |
| **924** | +/- | | | 07/85 ▸ 07/88 | | 171819031D | **812034** | 234 | 157 |
| **944** | +/- | | | 06/81 ▸ 02/85 | | 171819031D | **812034** | 234 | 157 |
| **RENAULT** | | | | | | | | | |
| **R5** | - | | | 01/72 ▸ 06/85 | | 7701034539 | **812032** | 147 | 138 |
| **Super 5** | +/- | | | 06/84 ▸ 12/96 | | 7701027078 | **883790** | 212 | 156 |
| **R9** | +/- | | | 10/81 ▸ 09/88 | | 7701027078 | **883790** | 212 | 156 |
| **R11** | +/- | | | 07/82 ▸ 07/89 | | 7701027078 | **883790** | 212 | 156 |
| **R19** | +/- | | | 07/88 ▸ 11/95 | | 7701204680 | **812157** | 234 | 157 |
| **R25** | +/- | | | 09/83 ▸ 01/92 | | 7701032225 | **812015** | 263 | 152 |
| **Alliance** | +/- | | | 06/82 ▸ 06/87 | | 7701027078 | **883790** | 212 | 156 |
| **Avantime** | + | | | 09/01 ▸ 05/03 | | 6025370415 | **812288** | 212 | 157 |
| **Clio** | +/- | | | 06/90 ▸ 02/98 | | 7701204680 | **812157** | 234 | 157 |
| **Clio II** | +/- | | | 03/98 ▸ 09/05 | | 7701045552 | **812169** | 234 | 157 |
| **Clio III** | +/- | | | 09/05 ▸ | | 7701208766 | **812373** | 175 | 169 |
| **Encore** | +/- | | | 09/83 ▸ 01/87 | | 7701027078 | **883790** | 212 | 156 |
| **Espace (84>91)** | +/- | | | 09/84 ▸ 01/91 | | 7701027078 | **883790** | 212 | 156 |
| **Espace II (91>96)** | +/- | | | 07/91 ▸ 08/96 | | 6025170679 | **812139** | 255 | 230 |
| **Espace III (96>2000)** | +/- | | Left / Gauche | 10/96 ▸ 06/00 | | 6025370414 | **812287** | 212 | 157 |
| **Espace III (96>2000)** | +/- | | Right / Droite | 10/96 ▸ 06/00 | | 6025370415 | **812288** | 212 | 157 |
| **Espace III (2000>2002)** | +/- | | Left / Gauche | 07/00 ▸ 10/02 | | 6025370414 | **812287** | 212 | 157 |
| **Espace III (2000>2002)** | +/- | | Right / Droite | 07/00 ▸ 10/02 | | 6025370415 | **812288** | 212 | 157 |
| **Laguna (94>98)** | - | | Type Valeo | 01/94 ▸ 04/98 | | 7701039481 | **812048** | 260 | 152 |
| **Laguna (94>98)** | +/- | | Type Behr | 01/94 ▸ 04/98 | | 7701038542 | **812113** | 260 | 152 |
| **Laguna (94>98)** | +/- | | Type Behr | 01/94 ▸ 04/98 | | 7701042517 | **812112** | 234 | 180 |
| **Laguna (98>2000)** | - | | Type Valeo | 05/98 ▸ 12/00 | | 7701039481 | **812048** | 260 | 152 |
| **Laguna (98>2000)** | +/- | | Type Behr | 05/98 ▸ 12/00 | | 7701038542 | **812113** | 260 | 152 |
| **Laguna (98>2000)** | +/- | | Type Behr | 05/98 ▸ 12/00 | | 7701042517 | **812112** | 234 | 180 |
| **Lutecia (Jap)** | +/- | | | 10/94 ▸ 02/98 | | 7701204680 | **812157** | 234 | 157 |
| **Megane (95>99)** | +/- | | | 11/95 ▸ 02/99 | | 7701204680 | **812157** | 234 | 157 |
| **Megane (99>)** | +/- | | | 02/99 ▸ | | 7701204680 | **812157** | 234 | 157 |
| **Megane II** | +/- | | | 09/02 ▸ 12/03 | | 7701208323 | **812247** | 220 | 150 |
| **Megane II** | +/- | | | 09/02 ▸ | | 7701209524 | **812423** | | |
| **Megane II** | +/- | | 1000W | 09/02 ▸ | | 7701207715 | **812235** | 233 | 82 |
| **Megane III** | +/- | | | 11/08 ▸ | | 271159831R | **812413** | | |
| **Megane Scenic (96>2003)** | +/- | | HP | 10/96 ▸ 04/03 | | 7701205450 | **812161** | 260 | 158 |
| **Megane Scenic (96>2003)** | +/- | | | 10/96 ▸ 04/03 | | 7701205451 | **812162** | 260 | 158 |
| **Scenic II** | +/- | | | 05/03 ▸ 03/04 | | 7701208323 | **812247** | 220 | 150 |
| **Scenic II** | +/- | | 1000W | 05/03 ▸ | | 7701207715 | **812235** | 233 | 82 |
| **Modus** | +/- | | | 09/04 ▸ 11/05 | | 7701208381 | **812308** | 167 | 169 |
| **Modus** | +/- | | | 11/05 ▸ | | 7701208766 | **812373** | 175 | 169 |
| **Modus** | +/- | | | 09/04 ▸ | | 7701060003 | **812309** | 146 | 97 |
| **Safrane** | +/- | | | 09/96 ▸ 11/00 | | 7701035891 | **812014** | 290 | 157 |
| **Twingo (93>)** | +/- | | | 03/93 ▸ 09/01 | | 7701036909 | **812154** | 210 | 160 |
| **Twingo III (2007>)** | +/- | | | 07/07 ▸ | | 7701208766 | **812373** | 175 | 169 |
| **RENAULT** | | | | | | | | | |
| **Express (85>97)** | +/- | | | 09/85 ▸ 08/97 | | 7701027078 | **883790** | 212 | 156 |
| **Extra (85>97)** | +/- | | | 09/85 ▸ 08/97 | | 7701027078 | **883790** | 212 | 156 |
| **Kangoo (97>2003)** | +/- | | 1.2, 1.4, 1.9D | 09/97 ▸ 02/03 | | 7701205538 | **812223** | 234 | 152 |
| **Kangoo (97>2003)** | +/- | | 1.6, 1.6 i 16V | 12/99 ▸ 02/03 | | 7701204680 | **812157** | 234 | 157 |
| **Kangoo (2003>)** | +/- | | | 03/03 ▸ | | 7701205538 | **812223** | 234 | 152 |
| **Master (80>97)** | - | | | 08/80 ▸ 09/97 | | 7701034291 | **812045** | 248 | 190 |
| **Master (97>2003)** | +/- | | | 09/97 ▸ 09/03 | | 7701205584 | **812170** | 330 | 157 |
| **Rapid (85>91)** | +/- | | | 09/85 ▸ 08/91 | | 7701027078 | **883790** | 212 | 156 |
| **Trafic (80>2001)** | - | | | 07/80 ▸ 03/01 | | 7704000112 | **883739** | 234 | 175 |
| **Trafic (2001>)** | +/- | | | 04/01 ▸ | | 7701473279 | **812375** | 265 | 149 |
| **RENAULT - IRISBUS** | | | | | | | | | |
| **R312 BUS** | | | | 01/88 ▸ 06/93 | | 5010104657 | **812355** | 420 | 158 |

| | A/C | | | | | OE | Valeo | DIM. | |
|---|---|---|---|---|---|---|---|---|---|
| **RENAULT TRUCKS** | | | | | | | | | |
| **C-Range** | | | | 06/88 ▸ | | 5000739631 | **812026** | 360 | 193 |
| **AE** | | | | 01/90 ▸ | | 5000294090 | **812349** | 340 | 227 |
| **AE** | | | | 01/90 ▸ | | 5001829118 | **812130** | 340 | 226 |
| **Magnum E-Tech** | | | | 02/00 ▸ | | 5001829118 | **812130** | 340 | 226 |
| **Premium** | +/- | | | 06/96 ▸ | | 5001833355 | **812128** | 330 | 155 |
| **Premium** | +/- | | TROPIC | 06/96 ▸ | | 5001833355 | **812128** | 330 | 155 |
| **R-Major** | - | | | 05/78 ▸ | | 5010104235 | **812035** | 360 | 193 |
| **ROVER** | | | | | | | | | |
| **100** | +/- | | | 09/90 ▸ 12/98 | | JEM10002 | **812071** | 187 | 150 |
| **200 (89>95)** | +/- | | | 10/89 ▸ 09/92 | | JEF10002 | **812069** | 195 | 91 |
| **400 (90>95)** | +/- | | | 03/90 ▸ 09/92 | | JEF10002 | **812069** | 195 | 91 |
| **600** | +/- | | | 04/93 ▸ 08/98 | | JEF100060 | **812070** | 220 | 142 |
| **Metro** | +/- | | | 10/80 ▸ 09/90 | | BAU5230 | **812039** | 172 | 152 |
| **Metro** | +/- | | | 09/90 ▸ 09/92 | | JEM10002 | **812071** | 187 | 150 |
| **Mini** | - | | | 06/59 ▸ 09/84 | | 37H7216 | **881769** | 147 | 138 |
| **Mini** | +/- | | | 10/84 ▸ 01/99 | | JEF10005 | **812028** | 161 | 138 |
| **SAAB** | | | | | | | | | |
| **9000** | +/- | | | 06/84 ▸ | | 9620238 | **812027** | 280 | 157 |
| **9-3 (2002>)** | +/- | | | 09/02 ▸ | | 93171801 | **812253** | 185 | 169 |
| **SEAT** | | | | | | | | | |
| **Alhambra** | +/- | | | 03/96 ▸ | | 7M1819030B | **812324** | 262 | 154 |
| **Alhambra** | +/- | | Rear | 03/96 ▸ | | 7M0819030 | **812361** | 171 | 149 |
| **Altea** | +/- | | | 03/04 ▸ | | 1K0819031 | **812254** | 235 | 190 |
| **Arosa** | +/- | | | 02/97 ▸ | | 1H1819031B | **812030** | 234 | 157 |
| **Arosa** | +/- | | | 02/97 ▸ | | 1H2819031A | **812031** | 234 | 157 |
| **Cordoba (93>2002)** | +/- | | | 09/93 ▸ 08/02 | | 1H1819031B | **812030** | 234 | 157 |
| **Cordoba (93>2002)** | +/- | | | 09/93 ▸ 08/02 | | 1H2819031A | **812031** | 234 | 157 |
| **Cordoba (2002>)** | +/- | | | 09/02 ▸ | | 6Q0819031 | **812323** | 180 | 179 |
| **Ibiza (93>2001)** | +/- | | | 02/93 ▸ 11/01 | | 1H1819031B | **812030** | 234 | 157 |
| **Ibiza (93>2001)** | +/- | | | 02/93 ▸ 11/01 | | 1H2819031A | **812031** | 234 | 157 |
| **Ibiza (2001>)** | +/- | | | 09/01 ▸ | | 6Q0819031 | **812323** | 180 | 179 |
| **Leon II** | A+ | | | 07/05 ▸ | | 1K0819031 | **812254** | 235 | 190 |
| **Toledo (91>98)** | +/- | | | 02/91 ▸ 10/98 | | 1H1819031A | **812030** | 234 | 157 |
| **Toledo (91>98)** | +/- | | | 02/91 ▸ 10/98 | | 1H2819031A | **812031** | 234 | 157 |
| **Toledo (2004>)** | +/- | | | 09/04 ▸ | | 1K0819031 | **812254** | 235 | 190 |
| **SEAT** | | | | | | | | | |
| **Inca** | +/- | | | 11/95 ▸ 06/03 | | 1H1819031B | **812030** | 234 | 157 |
| **Inca** | +/- | | | 11/95 ▸ 06/03 | | 1H2819031B | **812031** | 234 | 157 |
| **SKODA** | | | | | | | | | |
| **Fabia** | +/- | | | 08/99 ▸ | | 6Q0819031 | **812323** | 180 | 179 |
| **Octavia (96>2000)** | +/- | | | 10/96 ▸ 08/99 | | 1H1819031B | **812030** | 234 | 157 |
| **Octavia (96>2000)** | +/- | | | 10/96 ▸ 08/98 | | 1H2819031B | **812031** | 234 | 157 |
| **Octavia (2004>)** | +/- | | | 05/04 ▸ | | 1K0819031 | **812254** | 235 | 190 |
| **Roomster** | +/- | | | 03/06 ▸ | | 6Q0819031 | **812323** | 180 | 179 |
| **TOYOTA** | | | | | | | | | |
| **Aygo** | - | | 1.0i VVTi | 02/05 ▸ | | 870500H010 | **812379** | | |
| **Aygo** | + | | 1.0i VVTi | 02/05 ▸ | | 870500H020 | **812380** | | |
| **Aygo** | +/- | | 1.0i VVTi - COLD | 02/05 ▸ | | 870500H030 | **812381** | | |
| **Aygo** | +/- | | 1.4 Hdi | 02/05 ▸ | | 870500H040 | **812414** | | |
| **Aygo** | +/- | | 1.4 Hdi | 02/05 ▸ | | 870500H050 | **812415** | | |
| **Corolla (80) (83>87)** | +/- | | | 05/83 ▸ 09/87 | | 8710712340 | **812286** | 158 | 140 |

Heater Core Radiateur de refroidissement Heizungskühler Radiatori di riscaldamento Kachelradiator
Kalorifer radyatörü Radiador de calefacción Радиатор отопителя fűtőradiátor Radiátor topení Radiator Habitacu Θερμαντικό Σώμα



• **New** Nouveau **Nuevo** Novo **Nuovo** Nieuw **Neu** Nowość **Yeni** Новый Νέο **Novy**

| | A/C | | | | | OE | Valeo | DIM. | |
|---|---|---|---|---|---|---|---|---|---|
| **VAUXHALL** | | | | | | | | | |
| **Astra II (84>91)** | - | | | 10/84 ▸ 09/91 | | 3054182 | **812150** | 190 | 182 |
| **Astra III (91>98)** | +/- | | Type Delphi | 09/91 ▸ 02/98 | | 52488847 | **812146** | 182 | 190 |
| **Astra IV (98>)** | - | | Type Delphi | 02/98 ▸ | | 52488847 | **812146** | 182 | 190 |
| **Astra IV (98>)** | + | | Type Behr | 02/98 ▸ 12/99 | | 9117283 | **812222** | 210 | 180 |
| **Astra IV (98>)** | +/- | | Type Delphi | 02/98 ▸ 12/01 | | 9192937 | **812285** | 210 | 184 |
| **Astra IV (98>)** | +/- | | Type Delphi | 01/02 ▸ | | 1618134 | **812284** | 210 | 184 |
| **Calibra** | - | | Type Delphi | 06/90 ▸ 07/97 | | 52488847 | **812146** | 182 | 190 |
| **Carlton** | +/- | | | 11/86 ▸ 05/94 | | 1618044 | **812110** | 239 | 158 |
| **Cavalier III (88>95)** | +/- | | Type Delphi | 10/88 ▸ 10/95 | | 52488847 | **812146** | 182 | 190 |
| **Corsa I (93>2000)** | +/- | | | 04/93 ▸ 08/00 | | 52463287 | **812149** | 190 | 159 |
| **Corsa II (2000>)** | +/- | | | 09/00 ▸ | | 9196140 | **812225** | 167 | 171 |
| **Frontera** | | | REF LOCALE UK | 10/91 ▸ 09/98 | | 91151481 | **812077** | | |
| **Meriva** | +/- | | | 05/03 ▸ | | 93175260 | **812363** | 180 | 165 |
| **Nova** | - | | | 04/83 ▸ 03/93 | | 3050602 | **812148** | 190 | 159 |
| **Omega** | +/- | | | 04/94 ▸ | | 9194851 | **812126** | 250 | 182 |
| **Senator** | +/- | | | 09/87 ▸ 08/93 | | 1618044 | **812110** | 239 | 158 |
| **Signum** | +/- | | | 06/03 ▸ | | 93171801 | **812253** | 185 | 169 |
| **Tigra** | +/- | | | 11/94 ▸ 01/01 | | 52463287 | **812149** | 190 | 159 |
| **Tigra Twintop** | +/- | | | 07/04 ▸ | | 9196140 | **812225** | 167 | 171 |
| **Vectra (95>2002)** | - | | | 10/95 ▸ 03/02 | | 90463839 | **812117** | 205 | 181 |
| **Vectra (95>2002)** | +/- | | | 10/95 ▸ 03/02 | | 9118440 | **812118** | 250 | 182 |
| **Vectra C** | +/- | | | 04/02 ▸ | | 93171801 | **812253** | 185 | 169 |
| **Zafira (99>2003)** | M+ | | Type Behr | 05/99 ▸ 06/03 | | 9117283 | **812222** | 210 | 180 |
| **Zafira (2003>)** | + | | Type Behr | 07/03 ▸ | | 9117283 | **812222** | 210 | 180 |
| **VAUXHALL** | | | | | | | | | |
| **Combo** | +/- | | | 10/93 ▸ 09/01 | | 52463287 | **812149** | 190 | 159 |
| **Combo (2002>)** | +/- | | | 10/01 ▸ | | 9196140 | **812225** | 167 | 171 |
| **Vivaro** | +/- | | | 08/01 ▸ | | 91158692 | **812375** | 265 | 149 |
| **VOLKSWAGEN** | | | | | | | | | |
| **Corrado** | +/- | | | 09/88 ▸ 07/95 | | 191819031F | **812030** | 234 | 157 |
| **Corrado** | +/- | | | 09/88 ▸ 07/95 | | 1H2819031A | **812031** | 234 | 157 |
| **Derby (77>84)** | +/- | | | 01/77 ▸ 10/84 | | 867819121A | **812029** | 212 | 138 |
| **Eos** | +/- | | | 05/06 ▸ | | 1K0819031 | **812254** | 235 | 190 |
| **Fox** | +/- | | | 11/04 ▸ | | 6Q0819031 | **812323** | 180 | 179 |
| **Golf I (74>83)** | - | | | 08/76 ▸ 07/83 | | 171819031E | **812034** | 234 | 157 |
| **Golf I Cabriolet (79>93)** | - | | | 01/79 ▸ 07/93 | | 171819031E | **812034** | 234 | 157 |
| **Golf I Cabriolet (79>93)** | +/- | | | 04/84 ▸ 07/92 | | 1H1819031A | **812030** | 234 | 157 |
| **Golf I Cabriolet (79>93)** | +/- | | | 04/84 ▸ 07/92 | | 1H2819031A | **812031** | 234 | 157 |
| **Golf II (83>91)** | +/- | | | 08/83 ▸ 11/91 | | 191819031F | **812030** | 234 | 157 |
| **Golf II (83>91)** | +/- | | | 08/83 ▸ 11/91 | | 1H2819031A | **812031** | 234 | 157 |
| **Golf II Cabriolet (93>98)** | +/- | | | 09/93 ▸ 02/98 | | 1H1819031A | **812030** | 234 | 157 |
| **Golf II Cabriolet (93>98)** | +/- | | | 09/93 ▸ 02/98 | | 1H2819031A | **812031** | 234 | 157 |
| **Golf III (91>97)** | +/- | | | 11/91 ▸ 10/97 | | 1H1819031A | **812030** | 234 | 157 |
| **Golf III (91>97)** | +/- | | | 11/91 ▸ 10/97 | | 1H2819031A | **812031** | 234 | 157 |
| **Golf III Cabriolet (98>2002)** | +/- | | | 03/98 ▸ 04/02 | | 1H1819031A | **812030** | 234 | 157 |
| **Golf III Cabriolet (98>2002)** | +/- | | | 03/98 ▸ 04/02 | | 1H2819031A | **812031** | 234 | 157 |
| **Golf IV (97>2003)** | +/- | | | 10/97 ▸ 10/03 | | 1H1819031A | **812030** | 234 | 157 |
| **Golf IV (97>2003)** | +/- | | | 10/97 ▸ 10/03 | | 1H2819031A | **812031** | 234 | 157 |
| **Golf V (2003>2008)** | +/- | | | 10/03 ▸ 09/08 | | 1K0819031 | **812254** | 235 | 190 |
| **Golf VI (2008>)** | A+ | | | 10/08 ▸ | | 1K0819031B | **812254** | 235 | 190 |
| **Golf Plus (2005>)** | +/- | | | 01/05 ▸ | | 1K0819031 | **812254** | 235 | 190 |
| **Jetta I (78>83)** | - | | | 08/78 ▸ 07/83 | | 171819031E | **812034** | 234 | 157 |
| **Jetta II (83>92)** | - | | | 08/83 ▸ 11/92 | | 171819031E | **812034** | 234 | 157 |
| **Jetta II (83>92)** | +/- | | | 08/83 ▸ 10/91 | | 1H2819031A | **812031** | 234 | 157 |
| **Jetta (2005>)** | +/- | | | 08/05 ▸ | | 1K0819031 | **812254** | 235 | 190 |
| **Lupo** | +/- | | | 10/98 ▸ | | 1H1819031A | **812030** | 234 | 157 |
| **Lupo** | +/- | | | 10/98 ▸ | | 1H2819031A | **812031** | 234 | 157 |
| **New Beetle (98>2001)** | +/- | | | 01/98 ▸ 07/98 | | 1H1819031A | **812030** | 234 | 157 |
| **Passat (73>88)** | +/- | | | 05/73 ▸ 07/86 | | 171819031E | **812034** | 234 | 157 |

| | A/C | | | | | OE | Valeo | DIM. | |
|---|---|---|---|---|---|---|---|---|---|
| **VOLKSWAGEN (.../...)** | | | | | | | | | |
| **Passat (88>97)** | +/- | | | 04/88 ▸ 05/97 | | 1H1819031A | **812030** | 234 | 157 |
| **Passat (88>97)** | +/- | | | 04/88 ▸ 05/97 | | 1H2819031A | **812031** | 234 | 157 |
| **Passat (2005>)** | +/- | | | 03/05 ▸ | | 1K0819031 | **812254** | 235 | 190 |
| **Polo (74>94)** | +/- | | | 08/74 ▸ 07/94 | | 867819121A | **812029** | 212 | 138 |
| **Polo (94>2001)** | +/- | | | 10/94 ▸ 09/01 | | 1H1819031A | **812030** | 234 | 157 |
| **Polo (94>2001)** | +/- | | | 10/94 ▸ 09/01 | | 1H2819031A | **812031** | 234 | 157 |
| **Polo (2001>)** | +/- | | | 09/01 ▸ | | 6Q0819031 | **812323** | 180 | 179 |
| **Santana** | +/- | | | 08/81 ▸ 07/87 | | 171819031E | **812034** | 234 | 157 |
| **Scirocco** | +/- | | | 07/76 ▸ 07/92 | | 1H1819031A | **812030** | 234 | 157 |
| **Scirocco** | +/- | | | 07/86 ▸ 08/91 | | 1H2819031A | **812031** | 234 | 157 |
| **Sharan** | +/- | | | 07/96 ▸ | | 7M1819030B | **812324** | 262 | 154 |
| **Sharan** | +/- | | Rear | 07/96 ▸ | | 7M0819030 | **812361** | 171 | 149 |
| **Touran** | +/- | | | 02/03 ▸ | | 1K0819031 | **812254** | 235 | 190 |
| **Vento** | +/- | | | 11/91 ▸ 12/97 | | 1H1819031A | **812030** | 234 | 157 |
| **Vento** | +/- | | | 11/91 ▸ 12/97 | | 1H2819031A | **812031** | 234 | 157 |
| **VOLKSWAGEN** | | | | | | | | | |
| **Caddy (82>92)** | +/- | | | 08/82 ▸ 07/92 | | 171819031E | **812034** | 234 | 157 |
| **Caddy (95>2004)** | +/- | | | 11/95 ▸ 06/03 | | 1H1819031A | **812030** | 234 | 157 |
| **Caddy (95>2004)** | +/- | | | 11/95 ▸ 06/03 | | 1H2819031A | **812031** | 234 | 157 |
| **Caddy (2004>)** | +/- | | | 02/04 ▸ | | 1K0819031 | **812254** | 235 | 190 |
| **LT (75>96)** | +/- | | | 04/75 ▸ 12/95 | | 281265303B | **812245** | 190 | 155 |
| **LT (75>96)** | +/- | | | 04/75 ▸ 12/95 | | 281265303B | **812245** | 190 | 155 |
| **Transporter (90>2003)** | +/- | | | 09/90 ▸ 06/03 | | 701819031A | **812013** | 212 | 139 |
| **VOLVO** | | | | | | | | | |
| **340-360** | +/- | | | 09/82 ▸ 08/85 | | 3200712 | **812093** | 204 | 177 |
| **440-460-480** | +/- | | | 10/88 ▸ | | 3402363 | **812326** | 178 | 188 |
| **850** | + | | | 06/91 ▸ 12/96 | | 91442210 | **812327** | 190 | 186 |
| **C70** | +/- | | | 03/97 ▸ 09/98 | | 91442210 | **812327** | 190 | 186 |
| **S60** | +/- | | | 08/00 ▸ | | 9171503 | **812328** | 239 | 207 |
| **S80** | +/- | | | 06/98 ▸ | | 9171503 | **812328** | 239 | 207 |
| **V70 (96>99)** | +/- | | | 12/96 ▸ 03/00 | | 91442210 | **812327** | 190 | 186 |
| **XC70** | +/- | | | 01/00 ▸ | | 9171503 | **812328** | 239 | 207 |
| **VOLVO TRUCKS** | | | | | | | | | |
| **FH 12 (1993>)** | M | | | 09/93 ▸ | | 3090893 | **812343** | 380 | 190 |
| **FL** | | | | 10/85 ▸ | | 1624373 | **812345** | 370 | 190 |
| **FL** | | | | 10/85 ▸ | | 1697358 | **812344** | 370 | 190 |
| **FM 7 (1993>)** | | | | 09/93 ▸ | | 3090893 | **812343** | 380 | 190 |
| **FM 12 (1993>)** | | | | 09/93 ▸ | | 3090893 | **812343** | 380 | 190 |

Heater Core Radiateur de refroidissement Heizungskühler Radiatori di riscaldamento Kachelradiator
Kalorifer radyatörü Radiador de calefacción Радиатор отопителя fűtőradiátor Radiator topení Radiator Habitaclu Θερμαντικό Σώμα



• **New** Nouveau **Nuevo** Novo **Nuovo** Nieuw **Neu** Nowość **Yeni** Новый Νέο **Nový**

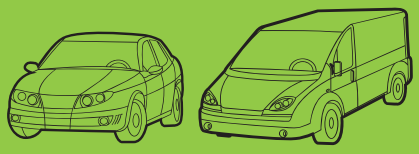

Valeo

Pour / For

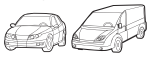


| | | | |
|---|---|---|---|
| **ALFA ROMEO** | **636** | **LANCIA** | **638** |
| **AUDI** | **636** | **PEUGEOT** | **638** |
| **CITROEN** | **636** | **SKODA** | **639** |
| **FIAT** | **637** | **VOLKSWAGEN** | **639** |
| **FORD** | **638** | **VOLVO** | **639** |


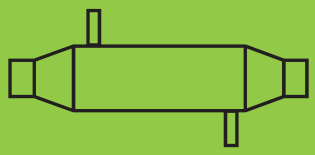

EGR Cooler
Refroidisseur EGR
AGR Kühler
Scambiatore EGR
EGR Koeler
EGR soğutucu
Refrigerador gas de escape (EGR)
Охладитель отработанных газов
EGR szelep hűtő
Chladič EGR
Supapă EGR
Βαλβίδα EGR

| Type | | CC | | AC | | | OE | Valeo | DIM. | TECH |
|---|---|---|---|---|---|---|---|---|---|---|
| **ALFA ROMEO** | | | | | | | | | | |
| **147 (2000>2004)** | | | | | | | | | | |
| 1.9 JTD 937/AX/BX | D | 1910 | 182B9.000,937A2.000 | M | | | 10/00 ▸ 09/04 | 46810017 | **817748** | |
| **147 (2004>)** | | | | | | | | | | |
| 1.9 JTD 937AX | D | 1910 | 192B1.000 | M | | | 10/04 ▸ 01/10 | 73500545 | **817750** | |
| 1.9 JTD,1.9 JTDM 937/AX/BX | D | 1910 | 182B9.000,937A2.000,937A3.000 939A7.000 | M | | | 10/04 ▸ 01/10 | 46810017 | **817748** | |
| **156 (97>2003)** | | | | | | | | | | |
| 1.9 JTD 932/A2/B2 | D | 1910 | 937A2.000,AR37101 | M | | | 04/00 ▸ 03/03 | 46810017 | **817748** | |
| **156 (2003>2007)** | | | | | | | | | | |
| 1.9 JTD 932/A2/B2 | D | 1910 | 937A2.000 | M | | | 04/03 ▸ 01/05 | 46810017 | **817748** | |
| 1.9 JTD 16V 932BX | D | 1910 | 937A5.000 | M | | | 09/04 ▸ 06/07 | 73500545 | **817750** | |
| **GT** | | | | | | | | | | |
| 1.9 JTD 16V 937CX | D | 1910 | 937A5.000 | M | | | 09/03 ▸ 11/06 | 73500545 | **817750** | |
| **AUDI** | | | | | | | | | | |
| **A4 (2004>2008)** | | | | | | | | | | |
| 1.9 TDi 8EC0 ; 8ED0 | D | 1896 | BKE,BRB | M | | | 11/04 ▸ 06/08 | 038131513S | **817754** | |
| 2.0 TDi 8EC0 ; 8ED0 | D | 1968 | BPW | M | | | 11/04 ▸ 06/08 | 038131513S | **817754** | |
| 2.0 TDi 8EC0 ; 8ED0 | D | 1968 | BPW | A | | | 11/04 ▸ 06/08 | 038131513S | **817754** | |
| **A4 CABRIOLET II (2006>2009)** | | | | | | | | | | |
| 2.0 TDi 8HE0 | D | 1968 | BPW | M | | | 01/06 ▸ 03/09 | 038131513S | **817754** | |
| 2.0 TDi 8HE0 | D | 1968 | BPW | A | | | 01/06 ▸ 03/09 | 038131513S | **817754** | |
| **CITROEN** | | | | | | | | | | |
| **C4** | | | | | | | | | | |
| 2.0 HDi 16V LARHRH ; LCRHRH | D | 1997 | DW10BTED4 | M | | | 11/04 ▸ 09/10 | 161835 | **817753** | |
| 2.0 HDi 16V LAR/HR ; LCR/HR/HRJ | D | 1997 | DW10BTED4 | A | | | 11/04 ▸ 12/09 | 161835 | **817753** | |
| **C4 PICASSO (2006>)** | | | | | | | | | | |
| 2.0 HDi 16V UARHRH ; UDRHRH | D | 1997 | DW10BTED4 | M | | | 09/06 ▸ | 161835 | **817753** | |
| 2.0 HDi 16V UDRHRJ | D | 1997 | DW10BTED4 | A | | | 03/07 ▸ | 161835 | **817753** | |
| **C5 (2001>2004)** | | | | | | | | | | |
| 2.0 HDi DCR/HYB/HZB ; DER HSB/HYB/HZB | D | 1997 | DW10ATED,DW10TD | M | | EGR 700405 | 02/01 ▸ 08/04 | 1628KC | **817751** | |
| 2.0 HDi DCR/HZE/HZF ; DER HZE/HZF | D | 1997 | DW10ATED | A | | EGR 700405 | 02/01 ▸ 08/04 | 1628KC | **817751** | |
| 2.2 HDi 16V DC4HXB ; DE4HXB | D | 2179 | DW12TED4 | M | | | 02/01 ▸ 08/04 | 1628LY | **817752** | |
| 2.2 HDi 16V DC4HXE ; DE4HXF | D | 2179 | DW12TED4 | A | | | 02/01 ▸ 08/04 | 1628LY | **817752** | |
| **C5 (2004>2007)** | | | | | | | | | | |
| 2.0 HDi 16V RCR/HRG/HRH ; RER HRG/HRH | D | 1997 | DW10BTED4 | M | | | 09/04 ▸ 06/08 | 161835 | **817753** | |
| 2.0 HDi 16V RCR/HRJ ; RER/HRG HRJ | D | 1997 | DW10BTED4 | A | | | 11/05 ▸ 06/08 | 161835 | **817753** | |
| **C5 (2008>)** | | | | | | | | | | |
| 2.0 HDi RDRHRH ; RWRHRH | D | 1997 | DW10BTED4 | M | | | 03/08 ▸ | 161835 | **817753** | |
| 2.0 HDi RDRHRJ ; RWRHRJ | D | 1997 | DW10BTED4 | A | | | 03/08 ▸ | 161835 | **817753** | |
| **C8** | | | | | | | | | | |
| 2.0 HDi 16V EBR/HKH/HRH | D | 1997 | DW10BTED4,DW10UTED4 | M | | | 04/06 ▸ | 161835 | **817753** | |
| **XSARA (2000>)** | | | | | | | | | | |
| 2.0 HDi N1RHZN ; N2RHZN ; N0R HZN | D | 1997 | DW10ATED | A | | EGR 700405 | 08/01 ▸ 08/05 | 1628KC | **817751** | |
| 2.0 HDi N0R/HYB/HZB ; N1R HYB/HZB ; N2R/HYB/HZB | D | 1997 | DW10ATED,DW10TD | M | | EGR 700405 | 09/00 ▸ 08/05 | 1628KC | **817751** | |
| **XSARA PICASSO** | | | | | | | | | | |
| 2.0 HDi CHR/HYA/HYB | D | 1997 | DW10TD | M | | EGR 700405 | 12/99 ▸ 12/05 | 1628KC | **817751** | |

EGR Cooler Refroidisseur EGR AGR Kühler Scambiatore EGR EGR Koeler EGR soğutucu EGR szelep hűtő Chladič EGR Supapă EGR Βαλβίδα EGR
Refrigerador gas de escape (EGR) Охладитель отработанных газов



• **New** Nouveau **Nuevo** Novo **Nuovo** Nieuw **Neu** Nowość **Yeni** Новый Νέο **Novy**

| Type Ctr. | | CC | | AC | | | OE | Valeo | DIM. | TECH |
|---|---|---|---|---|---|---|---|---|---|---|
| **CITROEN (.../...)** | | | | | | | | | | |
| **BERLINGO (2002>)** | | | | | | | | | | |
| 2.0 HDi GCRHYB ; GERHYB ; GBR HYB ; GJR/HYB/HYK | D | 1997 | DW10TD | M | | EGR 700405 | 12/02 ▸ 05/08 | 1628KC | **817751** | |
| **DISPATCH (2004>2006)** | | | | | | | | | | |
| 2.0 HDi | D | 1997 | DW10BTED,DW10BTED+L4 | M | | EGR 700405 | 01/04 ▸ 12/06 | 1628KC | **817751** | |
| **DISPATCH (2007>)** | | | | | | | | | | |
| 2.0 HDi 16V XAR/HKH/HRH ; XCR HKH/HRH ; XSRHKH ; XDR/HKH HRH ; XURHKH ; XVRHKH ; XWRHKH ; XTR/HKH/HRH | D | 1997 | DW10BTED4,DW10UTED4 | M | | | 01/07 ▸ | 161835 | **817753** | |
| **JUMPY (95>2003)** | | | | | | | | | | |
| 2.0 HDi BSRHXB ; BYRHXB ; BZRHXB ; BDR HXB | D | 1997 | DW10BTED | M | | EGR 700405 | 01/02 ▸ 12/03 | 1628KC | **817751** | |
| **JUMPY (2007>)** | | | | | | | | | | |
| 2.0 HDi 16V XAR/HKH/HRH ; XCR HKH/HRH ; XSRHKH ; XDR/HKH HRH ; XURHKH ; XVRHKH ; XWRHKH ; XTR/HKH/HRH | D | 1997 | DW10BTED4,DW10UTED4 | M | | | 01/07 ▸ | 161835 | **817753** | |
| **FIAT** | | | | | | | | | | |
| **BRAVA** | | | | | | | | | | |
| 1.9 JTD 182BR1A | D | 1910 | 182B4.000 | M | | | 10/98 ▸ | 55197877 | **817748** | |
| 1.9 JTD 182BV1A | D | 1910 | 182B9.000 | M | | | 09/00 ▸ 10/01 | 46810017 | **817748** | |
| **BRAVO (98>2006)** | | | | | | | | | | |
| 1.9 JTD 182/AR1A/AV1A | D | 1910 | 182B4.000,182B9.000 | M | | | 10/98 ▸ | 55197877 | **817748** | |
| 1.9 JTD 182AV1A | D | 1910 | 182B9.000 | M | | | 10/98 ▸ 03/02 | 46810017 | **817748** | |
| **BRAVO II (2007>2009)** | | | | | | | | | | |
| 1.9 MJTD 16V 198AXC1 | D | 1910 | 937A5.000 | M | | | 02/07 ▸ 12/09 | 73500545 | **817750** | |
| 1.9,1.9 MJTD 198/AXB1/AXD1/AXE1 | D | 1910 | 192A1.000,192A8.000,192B5.000 | M | | | 02/07 ▸ | 46810017 | **817748** | |
| **MAREA** | | | | | | | | | | |
| 1.9 JTD 185/AXN1/AXT1/BXT1 BXU1 | D | 1910 | 182B4.000,182B9.000,186A6.000 | M | | | 02/99 ▸ | 55197877 | **817748** | |
| 1.9 JTD 185/AXT1/BXT1/BXU1 | D | 1910 | 182B9.000,186A6.000 | M | | | 02/99 ▸ 09/02 | 46810017 | **817748** | |
| **MULTIPLA (98>2003)** | | | | | | | | | | |
| 1.9 JTD 186/AXD1/AXE1 | D | 1910 | 186A6.000,186A8.000 | M | | | 11/98 ▸ | 55197877 | **817748** | |
| 1.9 JTD 186/AXB1/AXD1/AXE1 | D | 1910 | 182B4.000,186A6.000,186A8.000 | M | | | 11/98 ▸ 06/04 | 46810017 | **817748** | |
| **MULTIPLA (2004>)** | | | | | | | | | | |
| 1.9 JTD 186/AXE1/AXG1 | D | 1910 | 186A8.000,186A9.000 | M | | | 07/04 ▸ 05/10 | 46810017 | **817748** | |
| 1.9 JTD 186AXG1 | D | 1910 | 186A9.000 | M | | | 01/06 ▸ | 55197877 | **817748** | |
| **STILO (2001>2004)** | | | | | | | | | | |
| 1.9 JTD 192/AXE1/BXE1/CXE1 DXE1 | D | 1910 | 192A1.000 | M | | | 09/01 ▸ | 55197877 | **817748** | |
| 1.9 JTD 192/AXE1/AXF1/BXE1 BXF1/CXE1/CXF1/DXE1/DXF1 | D | 1910 | 192A1.000,192A3.000 | M | | | 09/01 ▸ 12/03 | 46810017 | **817748** | |
| **STILO (2004>)** | | | | | | | | | | |
| 1.9 JTD,1.9 JTD Multijet 192/3/54/5J8/AXE1 AXF1/AXP1/AXS1/BXE1/BXF1/BXP1/CXE1/CXF1/CXP1 CXS1/DXE1/DXF1 | D | 1910 | 192A1.000,192A3.000,192A8.000 192A9.000 | M | | | 01/04 ▸ 01/08 | 46810017 | **817748** | |
| 1.9 JTD 192/3/54/5J8/AXE1 1.9 JTD Multijet 16V AXG1/BXE1/BXG1/CXE1 CXG1/DXE1/DXF1 | D | 1910 | 192A1.000,192A3.000,192A5.000 | M | | | 01/04 ▸ | 55197877 | **817748** | |
| 1.9 JTD 16V 192/AXT1/CXT1 1.9 JTD Multijet 16V | D | 1910 | 937A5.000 | M | | | 03/06 ▸ 01/08 | 73500545 | **817750** | |
| **FIAT** | | | | | | | | | | |
| **DOBLO (2000>2003)** | | | | | | | | | | |
| 1.9 JTD 223AXE1 | D | 1910 | 182B9.000 | M | | | 10/01 ▸ 12/03 | 55181418 | **817749** | |

| Type Ctr. | | CC | | AC | | | OE | Valeo | DIM. | TECH |
|---|---|---|---|---|---|---|---|---|---|---|
| **FIAT (.../...)** | | | | | | | | | | |
| **DOBLO II (2006>)** | | | | | | | | | | |
| 1.9 MJTD 8V 223AXL1 | D | 1910 | 223B1.000 | M | | | 01/06 ▸ | 55199705 | **817749** | |
| **DOBLO CARGO (2000>2003)** | | | | | | | | | | |
| 1.9 JTD 223/AXE1/ZXE1 | D | 1910 | 182B9.000 | M | | | 10/01 ▸ 12/03 | 55181418 | **817749** | |
| **DOBLO CARGO II (2006>)** | | | | | | | | | | |
| 1.9 MJTD 223/WXL1/WXR1/ZXR1 | D | 1910 | 223B1.000,223B2.000 | M | | | 01/06 ▸ | 55199705 | **817749** | |
| **FORD** | | | | | | | | | | |
| **FOCUS COUPÉ CABRIOLET (06>08)** | | | | | | | | | | |
| 2.0 TCDCi 16V | D | 1997 | D20TDCIFAP | M | | | 07/06 ▸ 04/08 | 1233381 | **817753** | |
| **FOCUS (2004>)** | | | | | | | | | | |
| 2.0 TDCi 16V | D | 1997 | D20TDCI,D20TDCIFAP | M | | | 09/04 ▸ 12/07 | 1233381 | **817753** | |
| **FOCUS II (2007>)** | | | | | | | | | | |
| 2.0 TDCi | D | 1997 | 2.0 DURATORQ,2.0 DURATORQ/F | M | | | 12/07 ▸ | 1233381 | **817753** | |
| **FOCUS C-MAX (03>07)** | | | | | | | | | | |
| 2.0 TDCi 16V DMII ; DMJI ; DM | D | 1997 | D20TDCI,D20TDCIFAP | M | | | 06/03 ▸ 02/07 | 1233381 | **817753** | |
| **FOCUS C-MAX (2007>)** | | | | | | | | | | |
| 2.0 TDCi 16V | D | 1997 | 2.0 DURATORQ,2.0 DURATORQ/F | M | | | 02/07 ▸ 08/10 | 1233381 | **817753** | |
| **GALAXY CA1 (2006>)** | | | | | | | | | | |
| 2.0 TDCi 16V | D | 1997 | 2.0 DURATORQ,2.0TDCIDURATORQ | M | | | 04/06 ▸ 03/10 | 1233381 | **817753** | |
| **KUGA** | | | | | | | | | | |
| 2.0 TDCi 136 | D | 1997 | 2.0 DURATORQ/F | M | | | 04/08 ▸ 03/10 | 1233381 | **817753** | |
| **MONDEO III (2007>)** | | | | | | | | | | |
| 2.0 TDCi | D | 1997 | 2.0TDCIDURATORQ | M | | | 06/07 ▸ 03/10 | 1233381 | **817753** | |
| 2.0 TDCi | D | 1997 | 2.0TDCIDURATORQ | A | | | 06/07 ▸ 03/10 | 1233381 | **817753** | |
| **S-MAX (2006>2010)** | | | | | | | | | | |
| 2.0 TDCi 16V | D | 1997 | 2.0 DURATORQ | M | | | 04/06 ▸ 06/10 | 1233381 | **817753** | |
| 2.0 TDCi 16V | D | 1998 | 2.0DI DURATORQ | M | | | 04/06 ▸ | 1233381 | **817753** | |
| **LANCIA** | | | | | | | | | | |
| **LYBRA** | | | | | | | | | | |
| 1.9 JTD 839/AXI1A/BXI1A | D | 1910 | 937A2.000,AR37101 | M | | | 09/99 ▸ 12/06 | 46810017 | **817748** | |
| **PEUGEOT** | | | | | | | | | | |
| **307(2001>2005)** | | | | | | | | | | |
| 2.0 HDi 16V 3CRHRH ; 3ERHRH ; 3HRHRH ; 3ARHRH | D | 1997 | DW10BTED4 | M | | | 04/04 ▸ 06/05 | 161835 | **817753** | |
| **307 (2005>)** | | | | | | | | | | |
| 2.0 HDi 16V 3BRHRH ; 3CRHRH ; 3ERHRH ; 3HRHRH ; 3ARHRH | D | 1997 | DW10BTED4 | M | | | 06/05 ▸ 03/09 | 161835 | **817753** | |
| 2.0 HDi 16V 3CRHRJ ; 3HRHRJ ; 3ARHRJ | D | 1997 | DW10BTED4 | A | | | 12/06 ▸ 06/08 | 161835 | **817753** | |
| **308** | | | | | | | | | | |
| 2.0 HDi 16V 4CRHRH ; 4HRHRH ; 4ARHRH | D | 1997 | DW10BTED4 | M | | | 09/07 ▸ | 161835 | **817753** | |
| 2.0 HDi 16V 4CRHRJ ; 4HRHRJ ; 4ARHRJ | D | 1997 | DW10BTED4 | A | | | 09/07 ▸ | 161835 | **817753** | |
| **406 (99>2004)** | | | | | | | | | | |
| 2.0 HDi 8BR/HYE/HYF HZF ; 8ER/HYE/HYF/HZF ; 8FR/HYF/HZF | D | 1997 | DW10ATED,DW10TD | M | | EGR 700405 | 04/99 ▸ 04/04 | 1628KC | **817751** | |

EGR Cooler Refroidisseur EGR AGR Kühler Scambiatore EGR EGR Koeler EGR soğutucu
Refrigerador gas de escape (EGR) Охладитель отработанных газов EGR szelep hűtő Chladič EGR Supapă EGR Βαλβίδα EGR



• **New** Nouveau **Nuevo** Novo **Nuovo** Nieuw **Neu** Nowość **Yeni** Новый Νέο **Novy**

| Type Ctr. | | CC | | | AC | | | OE | Valeo | DIM. | TECH |
|---|---|---|---|---|---|---|---|---|---|---|---|
| **PEUGEOT (.../...)** | | | | | | | | | | | |
| **406 (99>2004) (.../...)** | | | | | | | | | | | |
| 2.0 HDi 8BRHZR ; 8ERHZR | D | 1997 | DW10ATED | A | | EGR 700405 | 01/01 ▸ 04/04 | 1628KC | **817751** | | |
| **407** | | | | | | | | | | | |
| 2.0 HDi 16V 6ERHRH ; 6JRHRH ; 6DR HRG/HRH | D | 1997 | DW10BTED4 | M | | | 04/04 ▸ | 161835 | **817753** | | |
| 2.0 HDi 16V 6DR/HRE/HRJ ; 6ER HRE/HRJ | D | 1997 | DW10BTED4 | A | | | 04/04 ▸ | 161835 | **817753** | | |
| **607 (2000>2004)** | | | | | | | | | | | |
| 2.0 HDi 9DRHZB | D | 1997 | DW10ATED | M | | EGR 700405 | 05/00 ▸ 09/04 | 1628KC | **817751** | | |
| 2.2 HDi 16V 9D4/HXB/HXG | D | 2179 | DW12TED4 | M | | | 05/00 ▸ 09/04 | 1628LY | **817752** | | |
| 2.2 HDi 16V 9D4HXE | D | 2179 | DW12TED4 | A | | | 09/00 ▸ 03/03 | 1628LY | **817752** | | |
| **607 (2004>)** | | | | | | | | | | | |
| 2.0 HDi 16V 9URHRH | D | 1997 | DW10BTED4 | M | | | 01/06 ▸ | 161835 | **817753** | | |
| **807** | | | | | | | | | | | |
| 2.0 HDi 16V EBR/HKH/HRH | D | 1997 | DW10BTED4,DW10UTED4 | M | | | 04/06 ▸ | 161835 | **817753** | | |
| **PEUGEOT** | | | | | | | | | | | |
| **EXPERT (95>2003)** | | | | | | | | | | | |
| 2.0 HDi BSRHXB ; BYRHXB ; BZRHXB ; BDR HXB | D | 1997 | DW10BTED | M | | EGR 700405 | 01/02 ▸ 06/03 | 1628KC | **817751** | | |
| **EXPERT II (2007>)** | | | | | | | | | | | |
| 2.0 HDi 16V XAR/HKH/HRH ; XCR HKH/HRH ; XSRHKH ; XDR/HKH/HRH ; XTR/HKH HRH ; XVRHKH ; XWRHKH ; XUR/HKH/HRH | D | 1997 | DW10BTED4,DW10UTED4 | M | | | 01/07 ▸ | 161835 | **817753** | | |
| **PARTNER (2002>)** | | | | | | | | | | | |
| 2.0 HDi GCRHYB ; GERHYB ; GBR HYB ; GJR/HY/HYK | D | 1997 | DW10TD | M | | EGR 700405 | 11/02 ▸ 05/08 | 1628KC | **817751** | | |
| **RANCH (2002>)** | | | | | | | | | | | |
| 2.0 HDi GBRHYB ; GCRHYB | D | 1997 | DW10TD | M | | EGR 700405 | 11/02 ▸ 05/08 | 1628KC | **817751** | | |
| **SKODA** | | | | | | | | | | | |
| **SUPERB (2001>2008)** | | | | | | | | | | | |
| 1.9 TDi 3U4/124/144/224/244 324/344 | D | 1896 | BPZ,BSV | M | | | 10/05 ▸ 03/08 | 038131513S | **817754** | | |
| 2.0 TDi 16V 3U4/155/165/255/265 355/365 | D | 1968 | BSS,BWW | M | | | 10/05 ▸ 03/08 | 038131513S | **817754** | | |
| **VOLKSWAGEN** | | | | | | | | | | | |
| **PASSAT (2000>2005)** | | | | | | | | | | | |
| 2.0 TDi 3B3/0/1/2/3 ; 3B6/0 1/2/3 | D | 1968 | BGW | M | | | 11/03 ▸ 05/05 | 038131513S | **817754** | | |
| **VOLVO** | | | | | | | | | | | |
| **C30** | | | | | | | | | | | |
| 2.0 D Turbo 16V | D | 1998 | D4204T | M | | | 10/06 ▸ 03/10 | 8653691 | **817753** | | |
| **S40 (2004>)** | | | | | | | | | | | |
| 2.0 D 16V | D | 1998 | D4204T | M | | | 03/04 ▸ | 8653691 | **817753** | | |
| **V50** | | | | | | | | | | | |
| 2.0 D 16V MW7552 ; MW7551 | D | 1998 | D4204T | M | | | 03/04 ▸ | 8653691 | **817753** | | |

# VOLVO (.../...)

## C70 CC (2006>)

| Type Ctr. | | CC | | | AC | | | OE | Valeo | DIM. | TECH |
|---|---|---|---|---|---|---|---|---|---|---|---|
| 2.0 D 16V | D | 1998 | D4204T | M | | | 01/07 ▸ | 8653691 | **817753** | | |

EGR Cooler Refroidisseur EGR AGR Kühler Scambiatore EGR EGR Koeler EGR soğutucu
Refrigerador gas de escape (EGR) Охладитель отработанных газов EGR szelep hűtő Chladič EGR Supapă EGR Βαλβίδα EGR



• **New** Nouveau **Nuevo** Novo **Nuovo** Nieuw **Neu** Nowość **Yeni** Новый Νέο **Novy**

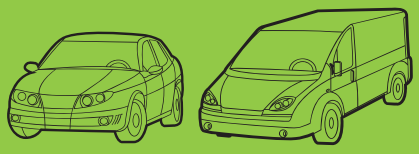

Valeo

Pour / For

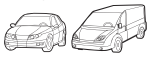

| | |
|---|---|
| **CITROEN** | **642** |
| **PEUGEOT** | **642** |

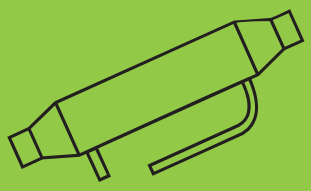

Particle Filter Exchanger
Echangeur Filtre à Particules
Heizmodul für Rußpartikelfilter
Scambiatore a filtro particellare
Verwarming module voor roetfilters
Partikül filtre ısıtıcısı
Intercambiador filtros con partículas
Сажевый фильтр
részecske szűrő fűtőegység
Ohřívač pevných částic
Filtru Incalzitor Particule
Φίλτρο σωματιδίων

| | Type Ctr. | | CC | | | AC | | | OE | Valeo | DIM. | TECH |
|---|---|---|---|---|---|---|---|---|---|---|---|---|
| **CITROEN** | | | | | | | | | | | | |
| **C5 (2004>2007)** | | | | | | | | | | | | |
| 2.2 HDi 16V | RC4HXE ; RE4HXE | D | 2179 | DW12TED4 | A | | | 09/04 ▸ 12/05 | 0384H0 | **818891** | | |
| **C8** | | | | | | | | | | | | |
| 2.2 HDi 16V | EA4/HWB/HWG ; EB4 HWB/HWG | D | 2179 | DW12TED4 | M | | | 06/02 ▸ 06/06 | 0384H4 | **818892** | | |
| **PEUGEOT** | | | | | | | | | | | | |
| **406 (99>2004)** | | | | | | | | | | | | |
| 2.2 HDI 16V | 8C4HXF | D | 2179 | DW12TED4 | M | | | 05/03 ▸ 10/04 | 0384F8 | **817757** | | |
| **807** | | | | | | | | | | | | |
| 2.2 HDi 16V | EA4/HWB/HWG ; EB4 HWB/HWG | D | 2179 | DW12TED4 | M | | | 06/02 ▸ 06/06 | 0384H4 | **818892** | | |

Particle Filter Exchanger Echangeur Filtre à Particules Heizmodul für Rußpartikelfilter Scambiatore a filtro particellare Verwarming module voor roetfilters
Partikül filtre ısıtıcısı Intercambiador filtros con partículas Сажевый фильтр részecske szűrő fűtőegység Ohřívač pevných částic Filtru Incalzitor Particule Φίλτρο σωμοτιδίων



• **New** Nouveau **Nuevo** Novo **Nuovo** Nieuw **Neu** Nowość **Yeni** Новый Νέο **Novy**

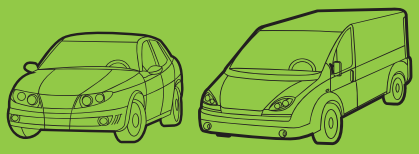

| Valeo | | OE | | |
|---|---|---|---|---|
| 508555 | | 6464C8 | **PEUGEOT** | 405 |
| 696001 | | 1341365 | **OPEL** | Signum |
| | | 24418347 | **VAUXHALL** | Signum (2003>2005) |
| 696002 | | 12801550 | **SAAB** | 9-3 (2002>) |
| 696003 | | 12801549 | **SAAB** | 9-3 (2002>) |
| 696012 | | 5142995AA | **CHRYSLER** | Grand Voyager (2004>2008) |
| 696013 | | 7701070217 | **RENAULT** | Clio II (2001>) |
| 696017 | | 4F0959455 | **AUDI** | A6 (2004>2008) |
| 696018 | | 4F0959455A | **AUDI** | A6 (2004>2008) |
| 696019 | | 6Q0959455AF | **SEAT** | Cordoba (2002>) |
| | | 6Q0959455AF | **SKODA** | Fabia (99>2004) |
| | | 6Q0959455AF | **VOLKSWAGEN** | Derby (99>) |
| 696020 | | 51770406 | **FIAT** | Croma II (2005>2007) |
| 696022 | | 51770418 | **FIAT** | Croma II (2005>2007) |
| 696023 | | 51770412 | **FIAT** | Croma II (2005>2007) |
| 696024 | | 1341364 | **OPEL** | Vectra C (2002>2005) |
| | | 24418346 | **VAUXHALL** | Vectra (2002>2005) |
| 696025 | | 1341366 | **OPEL** | Vectra C (2002>2005) |
| | | 24419326 | **VAUXHALL** | Vectra (2002>2005) |
| 696026 | | 1341368 | **OPEL** | Signum |
| | | 13114368 | **SAAB** | 9-3 (2002>) |
| | | 13114368 | **VAUXHALL** | Signum (2003>2005) |
| 696027 | | 1341369 | **OPEL** | Signum |
| | | 13114369 | **SAAB** | 9-3 (2002>) |
| | | 13114369 | **VAUXHALL** | Signum (2003>2005) |
| 696028 | | 1341370 | **OPEL** | Signum |
| | | 24453597 | **VAUXHALL** | Signum (2003>2005) |
| 696029 | | 1341371 | **OPEL** | Signum |
| | | 24453598 | **VAUXHALL** | Signum (2003>2005) |
| 696030 | | 1341383 | **OPEL** | Signum |
| | | 13182322 | **SAAB** | 9-3 (2002>) |
| | | 13182322 | **VAUXHALL** | Signum (2003>2005) |
| 696031 | | 165959455L | **AUDI** | 100 (71>82) |
| | | 165959455L | **SEAT** | Cordoba (93>96) |
| | | 165959455L | **VOLKSWAGEN** | Derby (81>84) |
| 696032 | | 1H0959455AD | **VOLKSWAGEN** | Golf III (91>97) |
| 696035 | | 1341244 | **OPEL** | Astra F (91>98) |
| | | 22061461 | **VAUXHALL** | Astra III (91>98) |
| 696038 | | 327959455A | **AUDI** | 100 (82>90) |
| | | 327959455A | **VOLKSWAGEN** | Passat (82>88) |
| 696039 | | 357959455F | **SEAT** | Toledo (91>98) |
| | | 357959455F | **VOLKSWAGEN** | Passat (88>93) |
| 696041 | | 7223405 | **FORD** | Galaxy (95>2000) |
| | | 6N0959455D | **SEAT** | Alhambra |
| | | 6N0959455D | **VOLKSWAGEN** | Lupo |
| 696042 | | 6X0959455A | **AUDI** | A3 (96>2003) |
| | | 6X0959455F | **SEAT** | Arosa |
| | | 6X0959455A | **SKODA** | Fabia (99>2004) |
| | | 6X0959455F | **VOLKSWAGEN** | Bora |

| Valeo | | OE | | |
|---|---|---|---|---|
| 696043 | | 701959455AM | **VOLKSWAGEN** | Transporter (F70) (90>96) |
| 696056 | | 3A0959455B | **VOLKSWAGEN** | Passat (93>97) |
| 696058 | | 64541392913 | **BMW** | 3 series E36 |
| 696062 | | 0015001293 | **MERCEDES** | C Class (202) (93>2001) |
| 696063 | | 0015001393 | **MERCEDES** | C Class (202) (93>2001) |
| 696069 | | 1253C5 | **PEUGEOT** | 206 |
| 696070 | | 1253C7 | **PEUGEOT** | 206 |
| 696071 | | 1253C9 | **PEUGEOT** | 206 |
| 696073 | | 125391 | **PEUGEOT** | 206 |
| 696074 | | 125392 | **PEUGEOT** | 206 |
| 696078 | | 6X0959455C | **SEAT** | Arosa |
| | | 6X0959455C | **SKODA** | Fabia (99>2004) |
| | | 6X0959455C | **VOLKSWAGEN** | Fox |
| 696079 | | 13167336 | **SAAB** | 9-3 (2002>) |
| | | 13167336 | **VAUXHALL** | Vectra (2002>2005) |
| 696080 | | 1341380 | **OPEL** | Vectra C (2002>2005) |
| | | 13167337 | **SAAB** | 9-3 (2002>) |
| | | 13167337 | **VAUXHALL** | Vectra (2002>2005) |
| 696081 | | 7701208196 | **RENAULT** | Master (2003>2006) |
| 696082 | | 9065000393 | **MERCEDES** | Sprinter II (2006>) |
| | | 2E0959455 | **VOLKSWAGEN** | Crafter |
| 696083 | | 9065000493 | **MERCEDES** | Sprinter II (2006>) |
| | | 2E0959455A | **VOLKSWAGEN** | Crafter |
| 696085 | | 71740487 | **FIAT** | Croma II (2005>2007) |
| 696091 | | 1253K2 | **CITROEN** | C4 |
| | | 1253K4 | **PEUGEOT** | 307 (2005>) |
| 696095 | | 46542854 | **FIAT** | Panda |
| | | 46541006 | **LANCIA** | Dedra |
| 696098 | | 46550400 | **FIAT** | Brava |
| 696100 | | 46534674 | **FIAT** | Cinquecento |
| 696101 | | 1308CF+125339 | **CITROEN** | Jumper (2002>2006) |
| | | 1305199080+13523254080 | **FIAT** | Ducato (2002>2006) |
| | | 1308CF+125339 | **PEUGEOT** | Boxer (2002>2006) |
| 696104 | | 51738360 | **FIAT** | Idea (2003>2007) |
| | | 51708405 | **LANCIA** | Y Ipsilon (2003>) |
| 696106 | | 51738357 | **FIAT** | Idea (2003>2007) |
| | | 51738357 | **LANCIA** | Musa (2004>2006) |
| 696108 | | 51702461 | **ALFA ROMEO** | 147 (2000>2004) |
| 696109 | | 46743392 | **ALFA ROMEO** | 147 (2000>) |
| | | 60692418 | **ALFA ROMEO** | 166 (98>) |
| 696111 | | 60692693 | **ALFA ROMEO** | 147 (2000>2004) |
| 696113 | | 60694104 | **ALFA ROMEO** | 156 (2003>) |
| 696118 | | 17117525508 | **BMW** | 3 series E46 |
| 696119 | | 64546922555 | **BMW** | 3 series E46 |
| 696120 | | 64548380780 | **BMW** | 5 series E39 |
| 696121 | | 64546921395 | **BMW** | 5 series E39 |
| 696123 | | 64508372039 | **BMW** | 3 series E36 |
| 696129 | | 1685000293 | **MERCEDES** | A Class (168) (97>2003) |
| 696130 | | 1685000593 | **MERCEDES** | A Class (168) (97>2003) |



• **New** Nouveau **Nuevo** Novo **Nuovo** Nieuw **Neu** Nowość **Yeni** Новый N□ **Novy**

| Valeo | | OE | | |
|---|---|---|---|---|
| 696132 | | 1253K1 | CITROEN | C5 (2001>2004) |
| | | 1400821280 | FIAT | Ulysse (2002>) |
| | | 9635494380 | LANCIA | Phedra |
| | | 1253K1 | PEUGEOT | 807 |
| 696133 | | 1253C6 | CITROEN | C3 (2002>2005) |
| 696134 | | 125396 | CITROEN | Xsara Picasso |
| 696135 | | 125390 | CITROEN | Xsara Picasso |
| 696136 | | 125395 | CITROEN | Xsara Picasso |
| 696137 | | 1253C8 | CITROEN | Xsara Picasso |
| | | 1253C8 | PEUGEOT | Partner (2002>) |
| 696138 | | 1250F8 | CITROEN | Xsara Picasso |
| | | 1250F8 | PEUGEOT | 406 (99>) |
| 696139 | | 1250G5 | CITROEN | C5 (2001>2004) |
| | | 9635466180 | FIAT | Ulysse (2002>) |
| | | 9635466180 | LANCIA | Phedra |
| | | 1250G5 | PEUGEOT | 807 |
| 696140 | | 1250G4 | CITROEN | C5 (2001>2004) |
| 696141 | | 1250G1 | CITROEN | C5 (2001>2004) |
| 696142 | | 1253P7 | CITROEN | C4 |
| | | 1494742080 | FIAT | Ulysse (2002>) |
| | | 1253P7 | PEUGEOT | 807 |
| 696149 | | 1107126 | FORD | Focus (2001>2003) |
| 696150 | | 1075126 | FORD | Focus (2001>2003) |
| 696151 | | 1075127 | FORD | Focus (2001>2003) |
| 696152 | | 1075135 | FORD | Focus (2001>2003) |
| 696153 | | 1075132 | FORD | Focus (2001>2003) |
| 696154 | | 1075130 | FORD | Focus (2001>2003) |
| 696157 | | 1088845 | FORD | Ka (96>2008) |
| 696158 | | 1020914 | FORD | Fiesta (95>99) |
| 696159 | | 1020917 | FORD | Fiesta (95>99) |
| 696160 | | 1020254 | FORD | Fiesta (95>99) |
| 696172 | | 1845039 | OPEL | Astra F (91>98) |
| | | 90510210 | VAUXHALL | Astra III (91>98) |
| 696173 | | 1341344 | OPEL | Astra G (98>) |
| | | 90570739 | VAUXHALL | Astra IV (98>) |
| 696174 | | 1250G0 | PEUGEOT | 406 (99>) |
| 696177 | | 1253A9 | CITROEN | C4 |
| | | 1253A9 | PEUGEOT | 307 (2005>) |
| 696179 | | 701959455J | VOLKSWAGEN | Transporter (F70) (90>96) |
| 696188 | | 125361 | CITROEN | Saxo (96>99) |
| | | 125361 | PEUGEOT | 106 (96>2003) |
| 696189 | | 125378 | PEUGEOT | 106 (96>2003) |
| 696190 | | 1253A3 | CITROEN | Saxo (96>99) |
| | | 1253A3 | PEUGEOT | 106 (96>2003) |
| 696191 | | 125377 | PEUGEOT | 106 (96>2003) |
| 696196 | | 6N0959453P | SEAT | Arosa |
| | | 6N0959453P | VOLKSWAGEN | Lupo |
| 696197 | | 46841314 | FIAT | Punto II (99>2003) |
| 696210 | | 1253C4 | CITROEN | C2 |

| Valeo | | OE | | |
|---|---|---|---|---|
| 696210... | | 1253C4 | PEUGEOT | 1007 |
| 696211 | | | CITROEN | Xantia (93>97) |
| 696212 | | | CITROEN | ZX |
| | | | PEUGEOT | 306 (93>97) |
| 696213 | | | CITROEN | Xsara (97>2000) |
| | | | PEUGEOT | 306 (93>97) |
| 696214 | | | CITROEN | Berlingo (96>2002) |
| | | | PEUGEOT | Partner (96>2002) |
| 696215 | | | RENAULT | Clio II (98>2001) |
| 696216 | | | RENAULT | Clio II (2001>) |
| 696217 | | | RENAULT | Kangoo (97>2003) |
| 696229 | | 214810028R | RENAULT | Mégane III (2009>) |
| 696238 | | 1253H6 | CITROEN | C2 |
| | | 1253H6 | PEUGEOT | 1007 |
| 696240 | | 8K0959455C | AUDI | A5 |
| 696241 | | 8K0959455A | AUDI | A5 |
| 696242 | | 4F0959455N | AUDI | A6 (2008>) |
| | | 4F0959455N | AUDI | A6 (2008>) |
| 696243 | | 4F0959455M | AUDI | A6 (2008>) |
| | | 4F0959455M | AUDI | A6 (2008>) |
| 696273 | | 17427543282 | BMW | 5 series E60 |
| 696274 | | 17427563259 | BMW | 1 series E81 |
| 696275 | | 17427562080 | BMW | 1 series E81 |
| 696276 | | 1366100 | FORD | Fiesta (2002>2005) |
| 696277 | | 1337582 | FORD | Fiesta (2002>2005) |
| 696278 | | 1337585 | FORD | Fiesta (2002>2005) |
| 696280 | | 1341346 | OPEL | Astra G (98>) |
| | | 24431828 | VAUXHALL | Astra IV (98>) |
| 696281 | | 1341219 | OPEL | Corsa A (82>93) |
| | | 22061171 | VAUXHALL | Corsa I (93>2000) |
| 696282 | | 1341352 | OPEL | Corsa C (2000>2003) |
| | | 24445190 | VAUXHALL | Corsa II (2000>2003) |
| 696283 | | 1341331 | OPEL | Corsa C (2000>2003) |
| | | 9158007 | VAUXHALL | Corsa II (2000>2003) |
| 696284 | | 1341334 | OPEL | Corsa C (2000>2003) |
| | | 9129965 | VAUXHALL | Corsa II (2000>2003) |
| 696285 | | 7701469149 | RENAULT | Espace III (96>2000) |
| 696286 | | 7701051492 | RENAULT | Mégane II |
| 696287 | | 7701054966 | RENAULT | Mégane II |
| 696288 | | 7701050192 | RENAULT | Espace IV (2002>2006) |
| 696335 | | 51792329 | FIAT | Croma II (2005>2007) |
| 696344 | | 1557572 | FORD | Fiesta (2008>) |
| 696345 | | 1541277 | FORD | Fiesta (2008>) |
| 696346 | | 1557574 | FORD | Fiesta (2008>) |
| 696355 | | 1341347 | OPEL | Astra G (98>2005) |
| | | 24431829 | VAUXHALL | Astra IV (98>) |
| 696362 | | 1152920 | FORD | Mondeo (2000>2003) |
| 696363 | | 1331402 | FORD | Mondeo (2000>2003) |
| 696364 | | | OPEL | Meriva |

| Valeo | | OE | | |
|---|---|---|---|---|
| 696365 | | 5017407 | CHRYSLER | PT Cruiser (2000>2007) |
| 696367 | | 1341332 | OPEL | Corsa C (2000>2003) |
| 696368 | | 125383 | PEUGEOT | 206 |
| 696369 | | 24421234 | VAUXHALL | Combo (2001>2004) |
| 696370 | | 1341348 | OPEL | Astra G (98>2005) |
| 696373 | | 6341156 | OPEL | Meriva |
| 696374 | | 6341158 | OPEL | Meriva |
| 696375 | | 6Q0959455D | SEAT | Cordoba (2002>) |
| | | 6Q0959455D | SKODA | Fabia (99>2004) |
| | | 6Q0959455D | VOLKSWAGEN | Fox |
| 696376 | | 214810898R | RENAULT | Mégane III (2008>) |
| 696377 | | 17422752632 | MINI | MINI (R56) (2006>) |
| 696378 | | 17427535100 | MINI | MINI (R56) (2006>) |
| 696379 | | 17422754854 | MINI | MINI (R56) (2006>) |
| 696380 | | 2045000293 | MERCEDES | C Class (204) (2007>) |
| 696381 | | 1314446 | OPEL | Corsa C (2000>2003) |
| | | 24445185 | VAUXHALL | Corsa II (2000>2003) |
| 696382 | | 1314443 | OPEL | Corsa C (2000>2003) |
| | | 24445183 | VAUXHALL | Corsa II (2000>2003) |
| 696383 | | 24402524 | VAUXHALL | Combo (2001>2004) |
| 696384 | | 6341162 | OPEL | Meriva |
| 696385 | | 1314966 | OPEL | Meriva |
| 696386 | | 1314557 | OPEL | Meriva |
| 696387 | | 24410993 | SAAB | 9-3 (2002>) |
| | | 24410993 | VAUXHALL | Vectra (2002>2005) |
| 696388 | | 7L0121207D | VOLKSWAGEN | Touareg (2002>2006) |
| 696389 | | 7L0121207E | VOLKSWAGEN | Touareg (2002>2006) |
| 698004 | | 7700828623 | RENAULT | Clio (90>98) |
| 698005 | | 7700828624 | RENAULT | R19 |
| 698007 | | 7700789732 | RENAULT | Clio (90>98) |
| 698015 | | 7701036722 | RENAULT | Twingo I (93>98) |
| 698084 | | 7701038405 | RENAULT | Laguna (94>98) |
| 698085 | | 7701035695 | RENAULT | Espace III (96>2000) |
| 698086 | | 7700818904 | RENAULT | Clio (90>98) |
| 698155 | | 8D0959455C | AUDI | A4 (94>98) |
| | | 1011638 | FORD | Galaxy (95>2000) |
| | | 8D0959455C | SEAT | Alhambra |
| | | 8D0959455C | VOLKSWAGEN | Passat (96>2000) |
| 698178 | | 46465018 | FIAT | Punto (93>99) |
| | | 46465018 | LANCIA | Y Ipsilon (95>2000) |
| 698179 | | 7741200 | FIAT | Punto (93>99) |
| | | 7741200 | LANCIA | Y Ipsilon (95>2000) |
| 698180 | | 46442937 | FIAT | Punto (93>99) |
| 698301 | | 125315 | CITROEN | XM (89>94) |
| | | 1250C3 | PEUGEOT | 309 (85>89) |
| 698302 | | 7701050677 | RENAULT | Clio II (2001>) |
| 698303 | | 125329 | CITROEN | ZX |
| | | 125329 | PEUGEOT | 405 (92>96) |
| 698304 | | 125331 | CITROEN | Xantia (97>2002) |

| Valeo | | OE | | |
|---|---|---|---|---|
| 698304... | | 125331 | PEUGEOT | 605 (94>99) |
| 698305 | | 125333 | CITROEN | Xantia (97>2002) |
| | | 1250E6 | PEUGEOT | 309 (89>94) |
| 698312 | | 95668984 | CITROEN | Xantia (97>2002) |
| 698313 | | 7700784652 | RENAULT | Clio (90>98) |
| 698316 | | 7701041302 | RENAULT | Clio (90>98) |
| 698317 | | 7701042440 | RENAULT | Twingo I (93>98) |
| 698321 | | 6K0121191A | SEAT | Cordoba (96>99) |
| 698342 | | 95593547 | CITROEN | C15 |
| 698343 | | 95668985 | CITROEN | Xantia (97>2002) |
| 698344 | | 1341314 | OPEL | Vectra B (95>99) |
| | | 9118169 | VAUXHALL | Vectra (95>2002) |
| 698350 | | 7701043673 | RENAULT | Master (97>2003) |
| 698356 | | 7701045215 | RENAULT | Clio II (98>2001) |
| 698357 | | 6K0959455A | SEAT | Cordoba (96>99) |
| | | 6K0959455A | VOLKSWAGEN | Polo (94>99) |
| 698358 | | 6K0959455B | SEAT | Cordoba (96>99) |
| | | 6K0959455B | VOLKSWAGEN | Polo (94>99) |
| 698359 | | 6K0959455D | SEAT | Cordoba (96>99) |
| | | 6K0959455D | VOLKSWAGEN | Polo (94>99) |
| 698360 | | 6K0959455C | SEAT | Cordoba (96>99) |
| | | 6K0959455C | VOLKSWAGEN | Polo (94>99) |
| 698367 | | 1H0959455D | SEAT | Cordoba (93>96) |
| | | 1H0959455D | VOLKSWAGEN | Corrado |
| 698368 | | 165959455T | AUDI | 100 (71>82) |
| | | 165959455T | SEAT | Cordoba (93>96) |
| | | 165959455T | VOLKSWAGEN | Derby (81>84) |
| 698370 | | 1H0959455 | VOLKSWAGEN | Corrado |
| 698373 | | 1J0959455M | AUDI | A3 (96>2003) |
| | | 1J0959455M | SEAT | Cordoba (2002>) |
| | | 1J0959455M | SKODA | Fabia (99>2004) |
| | | 1J0959455M | VOLKSWAGEN | Bora |
| 698375 | | 1250F0 | CITROEN | Xsara (97>2000) |
| | | 1250F0 | PEUGEOT | 306 (97>) |
| 698412 | | 4415731 | OPEL | Movano |
| | | 7701059544 | RENAULT | Master (2003>) |
| | | 9111573 | VAUXHALL | Movano |
| 698424 | | 4501134 | OPEL | Movano |
| | | 7701046205 | RENAULT | Master (2003>) |
| | | 9161434 | VAUXHALL | Movano |
| 698444 | | 125363 | CITROEN | Xsara (97>2000) |
| | | 125363 | PEUGEOT | 306 (93>97) |
| 698483 | | 46785738 | FIAT | Punto II (2003>) |
| 698484 | | 51742164 | FIAT | Punto II (2003>) |
| 698493 | | 1092378 | FORD | Fiesta (95>99) |
| 698528 | | 6K0959455AA | SEAT | Cordoba (99>2002) |
| | | 6K0959455AA | VOLKSWAGEN | Polo (99>2001) |
| 698542 | | 125394 | CITROEN | Evasion (98>2002) |
| | | 125394 | PEUGEOT | 806 (98>2002) |



• **New** Nouveau **Nuevo** Novo **Nuovo** Nieuw **Neu** Nowość **Yeni** Новый N□ **Novy**

| Valeo | | OE | | |
|---|---|---|---|---|
| 698552 | | 09204168 | OPEL | Agila (2000>2007) |
| | | 09204168 | VAUXHALL | Agila (2000>2007) |
| 698562 | | 46789792 | FIAT | Seicento |
| 698609 | | 8E0959455A | AUDI | A4 (2000>2004) |
| 698610 | | 8E0959455 | AUDI | A4 (2000>2004) |
| 698611 | | 8E0959455B | AUDI | A4 (2000>2004) |
| 698612 | | 8E0959455C | AUDI | A4 (2000>2004) |
| 698669 | | JRM100060 | ROVER | 45 (2000>2004) |
| 698786 | | 46799410 | FIAT | Panda (2003>) |
| 698788 | | 51732069 | FIAT | Panda (2003>) |
| 698844 | | 1341362 | OPEL | Signum |
| | | 24410988 | SAAB | 9-3 (2002>) |
| | | 24410988 | VAUXHALL | Signum (2003>2005) |
| 730015 | | 1300G2 | PEUGEOT | 309 (85>89) |
| 730018 | | 133035 | PEUGEOT | 205 |
| 730040 | | 1300K3 | ARO | 240 |
| | | 1300J9 | CITROEN | C25 (81>90) |
| | | 5981189 | FIAT | Ducato (81>94) |
| | | 1300J9 | PEUGEOT | J5 |
| 730055 | | 7701047887 | RENAULT | R19 |
| 730071 | | 1300E1 | PEUGEOT | 505 |
| 730110 | | 6084481 | FORD | Capri II |
| 730116 | | 6160667 | FORD | Fiesta (83>89) |
| 730117 | | 1643537 | FORD | Escort (86>90) |
| 730119 | | GRD105 | ROVER | Metro |
| 730124 | | 6160274 | FORD | Transit (86>91) |
| 730125 | | 1300126 | OPEL | Kadett E (84>91) |
| | | 90442550 | VAUXHALL | Astra II (84>91) |
| 730140 | | 7700785734 | RENAULT | Espace (84>91) |
| 730168 | | 19010PE0033 | HONDA | Civic II (83>87) |
| | | GRD124 | ROVER | 200 (84>90) |
| 730172 | | GRD110 | ROVER | Mini |
| 730180 | | 7700790964 | RENAULT | R19 |
| 730181 | | 7700806575 | RENAULT | Clio (90>98) |
| 730182 | | 7700806576 | RENAULT | Clio (90>98) |
| 730183 | | 7700804240 | RENAULT | Clio (90>98) |
| 730184 | | 6025101338 | RENAULT | Espace II (91>96) |
| 730185 | | 6025101341 | RENAULT | Espace II (91>96) |
| 730309 | | 46475456 | FIAT | Cinquecento |
| 730316 | | 19010PE1013 | HONDA | Civic II (83>87) |
| 730317 | | 21081301012 | LADA | Natacha |
| 730319 | | 82440378 | LANCIA | Delta (86>93) |
| 730334 | | 93813747 | IVECO | Daily (89>96) |
| 730344 | | 2015004303 | MERCEDES | 190 (201) |
| 730349 | | 443121253E | AUDI | 100 (82>90) |
| 730360 | | 4A0121251E | AUDI | 100 (90>94) |
| 730361 | | 4A0121251A | AUDI | 100 (90>94) |
| 730362 | | 4A0121251H | AUDI | 100 (90>94) |
| 730363 | | 4A0121251K | AUDI | 100 (90>94) |

| Valeo | | OE | | |
|---|---|---|---|---|
| 730365 | | 17111712982 | BMW | 3 series E30 |
| 730368 | | 1301D0 | PEUGEOT | 106 (91>96) |
| 730370 | | 1L0121251 | SEAT | Toledo (91>98) |
| 730372 | | 1301B0 | PEUGEOT | 106 (91>96) |
| 730375 | | 113610500 | SKODA | Favorit |
| 730395 | | 1300122 | OPEL | Calibra |
| | | 90443466 | VAUXHALL | Calibra |
| 730396 | | 1300084 | OPEL | Vectra A (88>95) |
| | | 3096385 | VAUXHALL | Calibra |
| 730397 | | 1640087218000 | DAIHATSU | Charade (G100) (87>93) |
| 730404 | | 2141050A11 | NISSAN | Sunny (B12) (86>90) |
| 730406 | | 2141077A00 | NISSAN | Sunny (B12) (86>90) |
| 730407 | | 2141083A00 | NISSAN | Sunny (N13) (86>90) |
| 730408 | | 2141054A00 | NISSAN | Sunny (B12) (86>90) |
| 730417 | | 19010PM3901 | HONDA | Civic III (87>91) |
| 730423 | | 19010PH1635 | HONDA | Accord Aerodeck (85>89) |
| 730424 | | 19010PH4A12 | HONDA | Accord Aerodeck (85>89) |
| 730429 | | 19010PK3A54 | HONDA | Prelude III (84>92) |
| 730430 | | 19010PK2752 | HONDA | Prelude III (84>92) |
| 730436 | | E35615200A | MAZDA | 323 (BF) (85>89) |
| 730437 | | B31615200 | MAZDA | 323 (BF) (85>89) |
| 730440 | | F8C115200 | MAZDA | 626 (GD) (87>92) |
| 730449 | | MB222073 | MITSUBISHI | Colt II (84>87) |
| 730454 | | MB356156 | MITSUBISHI | Pajero I (82>91) |
| 730456 | | 1770082022 | SUZUKI | Swift (SA) (83>88) |
| 730468 | | 1640014060 | TOYOTA | Corolla (80) (83>87) |
| 730469 | | 1640015200 | TOYOTA | Carina II (ST15*) (83>87) |
| 730470 | | 1640015210 | TOYOTA | Corolla (80) (83>87) |
| 730471 | | 1640016330 | TOYOTA | Carina II (ST17*) (87>92) |
| 730483 | | 1654321 | FORD | Fiesta (89>95) |
| 730484 | | 7138824 | FORD | Fiesta (89>95) |
| 730491 | | 96082116 | CITROEN | AX (91>98) |
| 730498 | | 96140587 | CITROEN | AX (91>98) |
| 730499 | | 7701047888 | RENAULT | Express (91>) |
| 730502 | | 6006000712 | RENAULT | Express (91>) |
| 730503 | | 6N0121253B | VOLKSWAGEN | Golf III (91>97) |
| 730504 | | 6N0121253 | VOLKSWAGEN | Vento |
| 730505 | | 1H0121253R | VOLKSWAGEN | Golf III (91>97) |
| 730507 | | 96050671 | CITROEN | ZX |
| 730508 | | 96055582 | CITROEN | ZX |
| 730510 | | 7700811808 | RENAULT | R19 |
| 730511 | | 7700272527 | RENAULT | R19 |
| 730512 | | 1301F8 | PEUGEOT | 405 (87>92) |
| 730515 | | 1301V8 | PEUGEOT | 106 (91>96) |
| 730519 | | 46521746 | FIAT | Cinquecento |
| 730520 | | 46783702 | FIAT | Cinquecento |
| 730534 | | 133034 | PEUGEOT | 205 |
| 730540 | | 7701035718 | RENAULT | Safrane |
| 730542 | | SE021117002B | SEAT | Ibiza (84>93) |

| Valeo | | OE | | |
|---|---|---|---|---|
| 730548 | | 7701352201 | **RENAULT** | Safrane |
| 730549 | | 7701352204 | **RENAULT** | Safrane |
| 730551 | | 7701047889 | **RENAULT** | R19 |
| 730563 | | 7139160 | **FORD** | Granada (85>91) |
| 730565 | | 19010SK4E00 | **HONDA** | Concerto |
| | | GRD125 | **ROVER** | 200 (84>90) |
| 730569 | | 1301L5 | **PEUGEOT** | 106 (91>96) |
| 730572 | | 1301E6 | **PEUGEOT** | 405 (92>96) |
| 730575 | | 1301JQ | **PEUGEOT** | 405 (92>96) |
| 730577 | | 1301G8 | **PEUGEOT** | 405 (92>96) |
| 730589 | | 1106758 | **FORD** | Sierra (87>93) |
| 730590 | | 6186886 | **FORD** | Sierra (87>93) |
| 730591 | | 19010PN7750 | **HONDA** | Legend (85>90) |
| | | GRD135 | **ROVER** | 800 (86>91) |
| 730595 | | GRD133 | **ROVER** | Maestro |
| 730629 | | 357121253AB | **VOLKSWAGEN** | Passat (88>93) |
| 730630 | | 1301TH | **CITROEN** | ZX |
| | | 1331CS | **PEUGEOT** | 306 (93>97) |
| 730632 | | 96172131 | **CITROEN** | AX (91>98) |
| 730633 | | 7701036152 | **RENAULT** | Twingo I (93>98) |
| 730634 | | 212151301012 | **LADA** | Niva |
| | | 1301R7 | **PEUGEOT** | 309 (85>89) |
| 730635 | | 95636832 | **CITROEN** | BX |
| 730838 | | 82461146 | **FIAT** | Coupe |
| | | 82461146 | **LANCIA** | Dedra |
| 730856 | | 6912233 | **FORD** | Escort (90>94) |
| 730857 | | 6912232 | **FORD** | Escort (90>94) |
| 730883 | | 6015008103 | **MERCEDES** | Transporter 207-410 |
| 730897 | | 96148094 | **CITROEN** | C15 |
| 730898 | | 1301C1 | **PEUGEOT** | 205 |
| 730927 | | 1331RY | **CITROEN** | ZX |
| | | 1331RY | **PEUGEOT** | 306 (93>97) |
| 730934 | | 133002 | **CITROEN** | XM (89>94) |
| | | 133002 | **PEUGEOT** | 605 (89>94) |
| 730944 | | 4401893 | **OPEL** | Arena |
| | | 7700741216 | **RENAULT** | Trafic (89>94) |
| | | 9109893 | **VAUXHALL** | Arena |
| 730945 | | 6K0121253A | **SEAT** | Cordoba (2002>) |
| | | 6K0121253A | **VOLKSWAGEN** | Polo (94>99) |
| 730946 | | 6K0121253J | **SEAT** | Cordoba (93>96) |
| | | 6K0121253J | **VOLKSWAGEN** | Polo (94>99) |
| 730947 | | 6K0121253K | **SEAT** | Cordoba (93>96) |
| | | 6K0121253K | **VOLKSWAGEN** | Polo (94>99) |
| 730948 | | 6K0121253S | **SEAT** | Cordoba (93>96) |
| | | 6K0121253S | **VOLKSWAGEN** | Polo (94>99) |
| 730953 | | 1301JL | **PEUGEOT** | 405 (92>96) |
| 730954 | | 6N0121253AK | **SEAT** | Arosa |
| | | 6N0121253AK | **VOLKSWAGEN** | Lupo |
| 730955 | | 1H0121253BE | **VOLKSWAGEN** | Golf III (91>97) |

| Valeo | | OE | | |
|---|---|---|---|---|
| 730956 | | 6N0121253K | **SEAT** | Arosa |
| | | 6N0121253K | **VOLKSWAGEN** | Lupo |
| 730957 | | 96104142 | **CITROEN** | Xantia (93>97) |
| 730958 | | 1301M7 | **CITROEN** | Xantia (93>97) |
| 730960 | | 96107231 | **CITROEN** | Xantia (93>97) |
| 730968 | | 6165438 | **FORD** | Sierra (87>93) |
| 730969 | | 7701038688 | **RENAULT** | Twingo I (93>98) |
| 730970 | | 19010PN7762 | **HONDA** | Legend (85>90) |
| | | GRD138 | **ROVER** | 800 (86>91) |
| 730971 | | 357121251B | **VOLKSWAGEN** | Passat (88>93) |
| 730972 | | 893121251H | **AUDI** | 80 (91>95) |
| 730973 | | 6001025340 | **ARO** | 10 |
| | | 6001025340 | **RENAULT** | R19 |
| 730975 | | 1300154 | **OPEL** | Astra F (91>98) |
| | | 90467723 | **VAUXHALL** | Astra III (91>98) |
| 730976 | | 46465015 | **FIAT** | Punto (93>99) |
| | | 46465015 | **LANCIA** | Y Ipsilon (95>2000) |
| 730980 | | 7721579 | **FIAT** | Punto (93>99) |
| 730981 | | 71735351 | **FIAT** | Punto (93>99) |
| 730982 | | 1301FY | **CITROEN** | Xantia (93>97) |
| 730983 | | 1301TL | **CITROEN** | ZX |
| | | 1301TL | **PEUGEOT** | 306 (93>97) |
| 730984 | | 1301M0 | **PEUGEOT** | 306 (93>97) |
| 730985 | | 1301TK | **CITROEN** | ZX |
| | | 1301TK | **PEUGEOT** | 306 (93>97) |
| 730990 | | 7652127 | **FIAT** | Uno CS (87>) |
| | | 7652127 | **INNOCENTI** | Elba |
| 730991 | | 7685063 | **FIAT** | Fiorino (146) (88>93) |
| | | 7685063 | **INNOCENTI** | Elba |
| 730993 | | 1300134 | **OPEL** | Astra F (91>98) |
| | | 52455043 | **VAUXHALL** | Astra III (91>98) |
| 730994 | | 1300132 | **OPEL** | Astra F (91>98) |
| | | 90443392 | **VAUXHALL** | Astra III (91>98) |
| 730995 | | 1307393080 | **FIAT** | Ducato (230) (94>2001) |
| | | 1301JK | **PEUGEOT** | Boxer (94>2001) |
| 730997 | | 1301N3 | **CITROEN** | Jumper (94>2001) |
| | | 1324816080 | **FIAT** | Ducato (230) (94>2001) |
| | | 1301N3 | **PEUGEOT** | Boxer (94>2001) |
| 730999 | | 1301N6 | **CITROEN** | Jumper (94>2001) |
| | | 1311521080 | **FIAT** | Ducato (230) (94>2001) |
| | | 1301N6 | **PEUGEOT** | Boxer (94>2001) |
| 731005 | | 3A0121253 | **VOLKSWAGEN** | Passat (93>97) |
| 731006 | | 3A0121253T | **VOLKSWAGEN** | Passat (93>97) |
| 731007 | | 3A0121253AA | **VOLKSWAGEN** | Passat (93>97) |
| 731008 | | 3A0121253AB | **VOLKSWAGEN** | Passat (93>97) |
| 731009 | | 1301N9 | **CITROEN** | Xantia (93>97) |
| 731010 | | 1331X2 | **CITROEN** | Xantia (97>2002) |
| | | 1301JV | **PEUGEOT** | 306 (93>97) |
| 731011 | | 1029616 | **FORD** | Mondeo (93>2000) |



• **New** Nouveau **Nuevo** Novo **Nuovo** Nieuw **Neu** Nowość **Yeni** Новый N **Novy**

| Valeo | | OE | | |
|---|---|---|---|---|
| 731012 | | 1301S0 | CITROEN | ZX |
| 731013 | | 1300149 | OPEL | Corsa B (93>2000) |
| | | 90410047 | VAUXHALL | Combo |
| 731019 | | 1640087F07000 | DAIHATSU | Charade (G100) (87>93) |
| 731020 | | 1640087768000 | DAIHATSU | Charade (G100) (87>93) |
| 731022 | | 1300103 | OPEL | Astra F (91>98) |
| | | 90353025 | VAUXHALL | Astra III (91>98) |
| 731025 | | 1H0121253D | SEAT | Cordoba (93>96) |
| | | 1H0121253D | VOLKSWAGEN | Golf III (91>97) |
| 731032 | | 1H0121253BA | VOLKSWAGEN | Golf III (91>97) |
| 731036 | | B3C715200D | MAZDA | 121 (DB) (90>96) |
| 731042 | | B10215200 | MAZDA | 121 (DA) (88>90) |
| 731054 | | MB660472 | MITSUBISHI | Galant III (87>92) |
| 731056 | | MB356521 | MITSUBISHI | Galant III (87>92) |
| 731072 | | B63F15200D | MAZDA | 323 (BG) (89>94) |
| 731073 | | 3396901 | FORD USA | Probe |
| | | FS1915200E | MAZDA | 626 (GE) (91>97) |
| 731076 | | 19010PT0013 | HONDA | Accord Aerodeck (90>93) |
| | | PCC113540 | MG | MG ZR |
| | | PCC113540 | ROVER | 25 (2004>) |
| 731082 | | 2146052A00 | NISSAN | Sunny (B12) (86>90) |
| 731083 | | 2146078A00 | NISSAN | Sunny (B12) (86>90) |
| 731085 | | 2140015G01 | NISSAN | Pathfinder (D21) |
| 731087 | | 21410Q9001 | NISSAN | Bluebird (T72) (88>90) |
| 731090 | | 2141070J01 | NISSAN | Primera (P10) (90>96) |
| 731095 | | 1640064120 | TOYOTA | Camry (82>86) |
| 731097 | | 1640074450 | TOYOTA | Camry (86>91) |
| 731098 | | 1640074120 | TOYOTA | Camry (86>91) |
| 731100 | | GRD169 | ROVER | 600 |
| 731105 | | 1640016200 | TOYOTA | Carina II (ST17*) (87>92) |
| 731106 | | 1640016130 | TOYOTA | Corolla (90) (87>92) |
| 731110 | | 1640074350 | TOYOTA | Carina II (ST17*) (87>92) |
| 731114 | | 1640074070 | TOYOTA | Celica (ST16) (85>89) |
| 731115 | | 1640074060 | TOYOTA | Celica (ST16) (85>89) |
| 731119 | | 1640011170 | TOYOTA | Corolla (90) (87>92) |
| 731122 | | 1640055030 | TOYOTA | Starlet (EP7) (84>89) |
| 731124 | | 1640010011 | TOYOTA | Starlet (EP7) (84>89) |
| 731127 | | 1H0121253BC | VOLKSWAGEN | Golf III (91>97) |
| 731128 | | 7701038237 | RENAULT | Espace III (96>2000) |
| 731129 | | 7701040662 | RENAULT | Espace III (96>2000) |
| 731134 | | 2146085E01 | NISSAN | Maxima (J30) |
| 731139 | | FE4K15200A | MAZDA | 626 (GD) (87>92) |
| 731142 | | B63115200A | MAZDA | 323 (BF) (85>89) |
| 731147 | | 2141058A00 | NISSAN | Sunny (B12) (86>90) |
| 731153 | | 745111740 | SUBARU | Justy |
| 731161 | | 7700876214 | RENAULT | Espace III (96>2000) |
| 731162 | | 7701038220 | RENAULT | Laguna (94>98) |
| 731165 | | 1301P1 | CITROEN | Evasion (94>98) |
| | | 1485799080 | FIAT | Ulysse (94>98) |

| Valeo | | OE | | |
|---|---|---|---|---|
| 731165... | | 1485799080 | LANCIA | Zeta |
| | | 133073 | PEUGEOT | 806 (94>98) |
| 731166 | | 1301P2 | CITROEN | Evasion (94>98) |
| | | 1473910080 | FIAT | Ulysse (94>98) |
| | | 1475060080 | LANCIA | Zeta |
| | | 1301P2 | PEUGEOT | 806 (94>98) |
| 731168 | | 1301Y7 | CITROEN | Evasion (94>98) |
| | | 1475845080 | FIAT | Ulysse (94>98) |
| | | 1475845080 | LANCIA | Zeta |
| | | 1301Y7 | PEUGEOT | 806 (94>98) |
| 731170 | | 1300104 | OPEL | Vectra A (88>95) |
| | | 90353027 | VAUXHALL | Cavalier III (88>95) |
| 731173 | | 1330K6 | CITROEN | C15 |
| 731174 | | 1300135 | OPEL | Calibra |
| | | 52455192 | VAUXHALL | Calibra |
| 731175 | | 1300133 | OPEL | Calibra |
| | | 90443463 | VAUXHALL | Calibra |
| 731176 | | 1301KG | CITROEN | ZX |
| | | 1301L7 | PEUGEOT | 106 (91>96) |
| 731177 | | 1301V4 | CITROEN | AX (91>98) |
| 731178 | | 1300150 | OPEL | Corsa B (93>2000) |
| | | 90410048 | VAUXHALL | Corsa I (93>2000) |
| 731179 | | 1300151 | OPEL | Corsa B (93>2000) |
| | | 90410049 | VAUXHALL | Corsa I (93>2000) |
| 731180 | | 1301X0 | CITROEN | ZX |
| 731181 | | 1301JY | CITROEN | ZX |
| | | 1301JY | PEUGEOT | 306 (93>97) |
| 731185 | | 1301TF | CITROEN | XM (94>2001) |
| | | 1301TF | PEUGEOT | 605 (94>99) |
| 731186 | | 133005 | PEUGEOT | 106 (91>96) |
| 731193 | | 2141072J20 | NISSAN | Primera (P10) (90>96) |
| 731196 | | 1640074750 | TOYOTA | Camry (91>96) |
| 731199 | | 1640016120 | TOYOTA | MR 2 (AW11) |
| 731202 | | 2141059Y01 | NISSAN | 100 NX Coupé (90>95) |
| 731210 | | PCC10040 | ROVER | 200 (89>95) |
| 731211 | | GRD143 | ROVER | 200 (89>95) |
| 731215 | | GRD979 | ROVER | Metro |
| 731217 | | 1300050 | OPEL | Corsa B (93>2000) |
| | | 90442621 | VAUXHALL | Astra II (84>91) |
| 731235 | | NRC6889 | LAND ROVER | Land 110 Series I - II - III |
| 731236 | | 1302058 | OPEL | Frontera (91>98) |
| | | 91147724 | VAUXHALL | Frontera (91>98) |
| 731237 | | 6302003 | OPEL | Frontera (91>98) |
| | | 91146914 | VAUXHALL | Frontera (91>98) |
| 731243 | | GRD166 | ROVER | 100 |
| 731248 | | 32119828 | VOLVO | 340-360 |
| 731251 | | 71735411 | ALFA ROMEO | 145 |
| 731257 | | 1024051 | FORD | Cougar |
| 731264 | | 6K0121253T | SEAT | Cordoba (96>99) |

| Valeo | | OE | | |
|---|---|---|---|---|
| 731265 | | 1H0121253P | SEAT | Cordoba (93>96) |
| | | 1H0121253P | VOLKSWAGEN | Polo (94>99) |
| 731266 | | 6K0121253G | SEAT | Cordoba (93>96) |
| | | 6K0121253G | VOLKSWAGEN | Polo (94>99) |
| 731267 | | 1H0121253L | SEAT | Arosa |
| | | 1H0121253CB | VOLKSWAGEN | Golf III (91>97) |
| 731268 | | 1HM121253D | SEAT | Cordoba (93>96) |
| | | 1HM121253D | VOLKSWAGEN | Polo (99>2001) |
| 731269 | | 1L0121253F | SEAT | Toledo (91>98) |
| 731270 | | 1L0121251E | SEAT | Toledo (91>98) |
| 731271 | | 1L0121253E | SEAT | Toledo (91>98) |
| 731276 | | 82458169 | LANCIA | Kappa |
| 731278 | | 82489087 | ALFA ROMEO | 166 (2003>) |
| | | 82489087 | LANCIA | Kappa |
| 731281 | | 7799061 | LANCIA | Kappa |
| 731282 | | 7785927 | LANCIA | Kappa |
| 731283 | | 60690407 | ALFA ROMEO | GTV (2003>) |
| 731287 | | 2146097B00 | NISSAN | Micra (K11) (92>2000) |
| 731289 | | 1301Z8 | CITROEN | XM (94>2001) |
| | | 1301Z8 | PEUGEOT | 406 (95>99) |
| 731292 | | 2105000903 | MERCEDES | E Class (210) |
| 731293 | | 2105000803 | MERCEDES | E Class (210) |
| 731294 | | 2105002803 | MERCEDES | E Class (210) |
| 731295 | | 133007 | PEUGEOT | Partner (96>2002) |
| 731296 | | 133008 | PEUGEOT | Partner (96>2002) |
| 731297 | | 1301GL | CITROEN | Xantia (93>97) |
| 731298 | | 1301GG | CITROEN | Xantia (93>97) |
| | | 1301GG | PEUGEOT | 406 (95>99) |
| 731299 | | 7138825 | FORD | Fiesta (89>95) |
| 731300 | | 6792788 | FORD | Escort (90>94) |
| 731302 | | 7767440 | FIAT | Bravo (95>98) |
| 731303 | | 46736953 | FIAT | Brava |
| 731304 | | 46736955 | FIAT | Brava |
| 731306 | | 7767815 | FIAT | Brava |
| 731372 | | FS2015200F | MAZDA | 626 (GE) (91>97) |
| 731374 | | 46430837 | FIAT | Punto (93>99) |
| | | 46430837 | LANCIA | Y Ipsilon (95>2000) |
| 731375 | | 46451997 | LANCIA | Y Ipsilon (95>2000) |
| 731378 | | 7700838134 | DACIA | Logan |
| | | 2140000QAZ | NISSAN | Kubistar |
| | | 7700838134 | RENAULT | Clio II (2001>) |
| 731379 | | 7700838135 | RENAULT | Megane (95>99) |
| 731380 | | 7701352605 | RENAULT | Megane (95>99) |
| 731381 | | 1301GA | PEUGEOT | 406 (95>99) |
| 731382 | | 1301GE | PEUGEOT | 406 (95>99) |
| 731383 | | 1301FN | PEUGEOT | 406 (95>99) |
| 731384 | | 1301FP | PEUGEOT | 406 (95>99) |
| 731385 | | 7258109 | FORD | Galaxy (95>2000) |
| 731386 | | 7258107 | FORD | Galaxy (95>2000) |

| Valeo | | OE | | |
|---|---|---|---|---|
| 731386... | | 7M0121253B | SEAT | Alhambra |
| | | 7M0121253B | VOLKSWAGEN | Sharan (95>2000) |
| 731387 | | 1022614 | FORD | Galaxy (95>2000) |
| | | 7M0121253D | VOLKSWAGEN | Sharan (95>2000) |
| 731389 | | 133003 | CITROEN | ZX |
| | | 133003 | PEUGEOT | 306 (93>97) |
| 731391 | | 1331H9 | CITROEN | ZX |
| | | 1331H9 | PEUGEOT | 306 (93>97) |
| 731393 | | 1300158 | OPEL | Vectra B (95>99) |
| | | 90499823 | VAUXHALL | Vectra (95>2002) |
| 731401 | | 535121251B | VOLKSWAGEN | Corrado |
| 731406 | | BTP1823 | LAND ROVER | Discovery (89>94) |
| 731409 | | PCC103980 | ROVER | Mini |
| 731411 | | 701121253B | VOLKSWAGEN | Transporter (F70) (90>96) |
| 731412 | | GRD922 | ROVER | 600 |
| 731417 | | RFG215200B | MAZDA | 626 (GE) (91>97) |
| 731421 | | 6302011 | OPEL | Astra F (91>98) |
| | | 90510645 | VAUXHALL | Astra III (91>98) |
| 731422 | | 8A0121251 | AUDI | 80 (91>95) |
| 731428 | | 8A0121251A | AUDI | 80 (91>95) |
| 731429 | | 8A0121251B | AUDI | 80 (91>95) |
| 731430 | | 8A0121251C | AUDI | 80 (91>95) |
| 731434 | | 19010P1KE01 | HONDA | Civic Aerodeck (97>) |
| 731437 | | BPE815200 | MAZDA | MX5 (NA) (90>98) |
| 731438 | | 45199AA220 | SUBARU | Legacy (89>93) |
| 731441 | | 1640016530 | TOYOTA | Celica (ST200) (93>99) |
| 731451 | | MB660566 | MITSUBISHI | Colt IV (91>96) |
| 731456 | | 45111GA650 | SUBARU | Leone (79>84) |
| 731458 | | 19010P1KE51 | HONDA | Civic Aerodeck (97>) |
| 731459 | | 19010P28G52 | HONDA | Civic IV (91>95) |
| 731461 | | B61S15200C | MAZDA | 323 (BG) (89>94) |
| 731462 | | MB660213 | MITSUBISHI | Space Runner |
| 731463 | | 1770060A11 | SUZUKI | Vitara |
| 731464 | | 1640015501 | TOYOTA | Corolla (100) (92>97) |
| 731466 | | KL1915200F | MAZDA | 626 (GE) (91>97) |
| 731467 | | 19010PG7305 | HONDA | Integra (2001>) |
| 731469 | | 19010P30G03 | HONDA | Civic IV (91>95) |
| 731471 | | 19010P45G01 | HONDA | Accord V (93>95) |
| 731472 | | KL2015200G | MAZDA | 626 (GE) (91>97) |
| 731474 | | 19010P2FA51 | HONDA | Civic V (EJ*) (96>2000) |
| 731477 | | 86013539 | VOLVO | 850 |
| 731486 | | 91123003 | BEDFORD | Rascal |
| | | 91123003 | G.M.E. | Rascal |
| | | 91123003 | VAUXHALL | Rascal |
| 731491 | | ESR3275 | LAND ROVER | Discovery (89>94) |
| 731492 | | 6912241 | FORD | Transit (92>95) |
| 731498 | | 1301SQ | CITROEN | Saxo (96>99) |
| | | SD210801301012 | LADA | Sagona |
| | | 1301SQ | PEUGEOT | 106 (96>2003) |



• **New** Nouveau **Nuevo** Novo **Nuovo** Nieuw **Neu** Nowość **Yeni** Новый N **Novy**

| Valeo | | OE | | |
|---|---|---|---|---|
| 731501 | | 893121251AA | AUDI | 80 (86>91) |
| 731503 | | 8A0121251E | AUDI | 80 (91>95) |
| 731505 | | 893121251G | AUDI | 80 (91>95) |
| 731508 | | 17111712977 | BMW | 3 series E30 |
| 731509 | | 17111719024 | BMW | 3 series E30 |
| 731512 | | 17111723898 | BMW | 3 series E36 |
| 731514 | | 17112244647 | BMW | 3 series E36 |
| 731520 | | 17111109986 | BMW | 5 series E12 |
| 731523 | | 17111702453 | BMW | 5 series E34 |
| 731525 | | 90528302 | OPEL | Vectra B (95>99) |
| 731526 | | 1331HQ | CITROEN | Saxo (96>99) |
| | | 133029 | PEUGEOT | 106 (96>2003) |
| 731527 | | 1301SX | CITROEN | Saxo (96>99) |
| | | 1301HX | PEUGEOT | 106 (91>96) |
| 731528 | | 1301TA | CITROEN | Saxo (96>99) |
| | | 1301TA | PEUGEOT | 106 (96>2003) |
| 731529 | | 7701041957 | RENAULT | Espace III (96>2000) |
| 731530 | | 133092 | CITROEN | Saxo (96>99) |
| | | 133092 | PEUGEOT | 106 (96>2003) |
| 731531 | | 4798013 | CHRYSLER | Voyager (96>2001) |
| 731537 | | 8D0121251Q | AUDI | A4 (94>98) |
| | | 8D0121251Q | VOLKSWAGEN | Passat (96>2000) |
| 731538 | | 7701352606 | RENAULT | Megane Classic (96>99) |
| 731550 | | 1086946 | FORD | Mondeo (93>2000) |
| 731551 | | | OPEL | Astra F (91>98) |
| 731552 | | 7701042436 | RENAULT | Twingo I (93>98) |
| 731558 | | 46465017 | FIAT | Punto (93>99) |
| 731559 | | 0060620437 | ALFA ROMEO | 145 |
| 731561 | | 0060625330 | ALFA ROMEO | 145 |
| 731562 | | 46465021 | FIAT | Punto (93>99) |
| | | 46465021 | LANCIA | Y Ipsilon (95>2000) |
| 731565 | | 1640016470 | TOYOTA | Carina E (92>97) |
| 731568 | | 1640064651 | TOYOTA | Corolla (100) (92>97) |
| 731569 | | 1640064731 | TOYOTA | Carina E (92>97) |
| 731570 | | 133056 | CITROEN | Xsara (97>2000) |
| | | 133056 | PEUGEOT | Partner (96>2002) |
| 731572 | | 93825378 | IVECO | Daily (96>99) |
| 731574 | | 133014 | PEUGEOT | 406 (95>99) |
| 731575 | | 133015 | PEUGEOT | 406 (95>99) |
| 731586 | | 133027 | PEUGEOT | 406 (95>99) |
| 731591 | | 71736177 | ALFA ROMEO | 145 |
| 731592 | | 71735370 | FIAT | Coupe |
| | | 46551214 | LANCIA | Dedra |
| 731593 | | 71735354 | FIAT | Coupe |
| 731594 | | 6148704 | FORD | Escort (86>90) |
| 731595 | | 6525326 | FORD | Escort (86>90) |
| 731605 | | 2D0121253B | VOLKSWAGEN | LT II (96>2003) |
| 731606 | | 1J0121253P | AUDI | A3 (96>2003) |
| | | 1J0121253AD | SEAT | Leon |

| Valeo | | OE | | |
|---|---|---|---|---|
| 731606... | | 1J0121253AD | SKODA | Octavia (2000>2004) |
| | | 1J0121253AD | VOLKSWAGEN | Bora |
| 731607 | | 1J0121253G | SEAT | Leon |
| | | 1J0121253G | SKODA | Octavia (2000>2004) |
| | | 1J0121253G | VOLKSWAGEN | Bora |
| 731611 | | 133098 | CITROEN | Jumper (2002>2006) |
| | | 1341514080 | FIAT | Ducato (2002>2006) |
| | | 133097 | PEUGEOT | Boxer (2002>2006) |
| 731616 | | 7D0121253 | VOLKSWAGEN | Transporter (F7D) (96>2003) |
| 731617 | | 1001856 | FORD | Fiesta (95>99) |
| | | 1E0315200A | MAZDA | 121 (JA/JB) (96>) |
| 731620 | | 1640087F42000 | DAIHATSU | Applause (A100) (89>97) |
| 731623 | | 1640087226000 | DAIHATSU | Cuore (L80) (85>90) |
| 731625 | | 1640087752000 | DAIHATSU | Charade (G11/30) (83>86) |
| 731629 | | 19010PY3902 | HONDA | Legend (90>96) |
| 731630 | | 19010PY3A02 | HONDA | Legend (90>96) |
| 731634 | | 19010PM8A02 | HONDA | Civic III (87>91) |
| 731635 | | 19010PM5405 | HONDA | Civic III (87>91) |
| 731638 | | MB538506 | MITSUBISHI | Eclipse |
| 731639 | | MB538509 | MITSUBISHI | Eclipse |
| 731641 | | MB605455 | MITSUBISHI | 3000 GT |
| 731642 | | MB538548 | MITSUBISHI | Colt III (87>91) |
| 731646 | | MB660364 | MITSUBISHI | Colt III (87>91) |
| 731647 | | MB660558 | MITSUBISHI | Colt IV (91>96) |
| 731648 | | MB660561 | MITSUBISHI | Lancer F (CB/CD) (92>96) |
| 731649 | | MB890506 | MITSUBISHI | Colt IV (91>96) |
| 731654 | | 2141055S00 | NISSAN | Laurel (C32) |
| 731656 | | 2141051E00 | NISSAN | Prairie (M11) (88>95) |
| 731657 | | 2146044R01 | NISSAN | Prairie (M11) (88>95) |
| 731659 | | 2141053J00 | NISSAN | Primera (P10) (90>96) |
| 731661 | | 2146083A00 | NISSAN | Sunny (N13) (86>90) |
| 731662 | | 2146065Y02 | NISSAN | 100 NX Coupé (90>95) |
| 731664 | | 2141062C01 | NISSAN | 100 NX Coupé (90>95) |
| 731665 | | 2141057Y02 | NISSAN | Sunny (N14) (90>95) |
| 731670 | | 2141062Y02 | NISSAN | Sunny (N14) (90>95) |
| 731674 | | 2141074N00 | NISSAN | Primera (P10) (90>96) |
| 731675 | | 45199AA090 | SUBARU | Legacy (89>93) |
| 731677 | | 45199KA261 | SUBARU | Vivio |
| 731678 | | 45199KA271 | SUBARU | Vivio |
| 731682 | | 1640074810 | TOYOTA | Carina E (92>97) |
| 731684 | | 1640062100 | TOYOTA | Camry (91>96) |
| 731685 | | 1640016481 | TOYOTA | Carina E (92>97) |
| 731688 | | 164001B020 | TOYOTA | Starlet (EP91) (96>) |
| 731694 | | 1640074550 | TOYOTA | Celica (ST18) (89>93) |
| 731696 | | 1640074540 | TOYOTA | Celica (ST18) (89>93) |
| 731698 | | 1640064160 | TOYOTA | Carina II (ST15*) (83>87) |
| 731713 | | 1640011340 | TOYOTA | Starlet (EP/NP8) (89>95) |
| 731714 | | 1640011320 | TOYOTA | Starlet (EP/NP8) (89>95) |
| 731715 | | 1640042141 | TOYOTA | Supra (MA70) (86>93) |

| Valeo | | OE | | |
|---|---|---|---|---|
| 731716 | | 1640042130 | TOYOTA | Supra (MA70) (86>93) |
| 731717 | | 1640042121 | TOYOTA | Supra (MA70) (86>93) |
| 731725 | | 17111740698 | BMW | 5 series E39 |
| 731728 | | 6K0121253AC | SEAT | Cordoba (93>96) |
| | | 6K0121253AC | VOLKSWAGEN | Polo (94>99) |
| 731734 | | 1001855 | FORD | Fiesta (95>99) |
| | | 1E0415200 | MAZDA | 121 (JA/JB) (96>) |
| 731735 | | 1001857 | FORD | Fiesta (95>99) |
| | | 1E1015200B | MAZDA | 121 (JA/JB) (96>) |
| 731736 | | 1001859 | FORD | Fiesta (95>99) |
| | | 1E0515200A | MAZDA | 121 (JA/JB) (96>) |
| 731738 | | 7700876213 | RENAULT | Espace III (96>2000) |
| 731741 | | 6015007803 | MERCEDES | Transporter 207-410 |
| 731743 | | 133024 | CITROEN | Xsara (97>2000) |
| | | 1331Q7 | PEUGEOT | 306 (97>) |
| 731744 | | 133023 | CITROEN | Xsara (97>2000) |
| | | 133023 | PEUGEOT | 306 (97>) |
| 731749 | | 4546902 | CHRYSLER | Neon |
| 731755 | | 8D0121251M | AUDI | A4 (94>98) |
| | | 8D0121251BC | SKODA | Superb |
| | | 8D0121251M | VOLKSWAGEN | Passat (2000>) |
| 731756 | | 8D0121251N | AUDI | A4 (94>98) |
| | | 8D0121251N | SKODA | Superb |
| | | 8D0121251N | VOLKSWAGEN | Passat (2000>) |
| 731757 | | 8D0121251L | AUDI | A4 (94>98) |
| | | 8D0121251BB | SKODA | Superb |
| | | 8D0121251L | VOLKSWAGEN | Passat (2000>) |
| 731760 | | 893121251N | AUDI | 80 (91>95) |
| 731766 | | 17112246012 | BMW | 5 series E39 |
| 731779 | | 7242486 | FORD | Transit (95>99) |
| 731782 | | 7242485 | FORD | Transit (95>99) |
| 731785 | | 1958982 | FORD | Maverick (93>98) |
| | | 214107F000 | NISSAN | Terrano II (R20) (93>2001) |
| 731786 | | 1659344 | FORD | P100 Pick-up |
| 731804 | | 2025006103 | MERCEDES | C Class (202) (93>2001) |
| 731805 | | 2025002203 | MERCEDES | C Class (202) (93>2001) |
| 731808 | | 2025003203 | MERCEDES | C Class (202) (93>2001) |
| 731811 | | PCC105740 | MG | MG F |
| 731815 | | PCC001480 | MG | MG ZR |
| | | GRD938 | ROVER | 45 (2000>2004) |
| 731816 | | PCC104670 | ROVER | 200 (95>99) |
| 731817 | | PCC104680 | ROVER | 200 (95>99) |
| 731818 | | PCC107410 | MG | MG ZS |
| | | GRD1074 | ROVER | 45 (2000>2004) |
| 731820 | | GRD932 | ROVER | 45 (2000>2004) |
| 731828 | | 1770060B22 | SUZUKI | Swift (SF) (89>) |
| 731830 | | 1640074790 | TOYOTA | Carina E (92>97) |
| 731831 | | 1640074840 | TOYOTA | Carina E (92>97) |
| 731833 | | 1640076062 | TOYOTA | Previa (TCR) (90>2000) |

| Valeo | | OE | | |
|---|---|---|---|---|
| 731837 | | 1640062150 | TOYOTA | Camry (91>96) |
| 731839 | | 52463043 | OPEL | Omega B (94>) |
| | | 52463044 | VAUXHALL | Omega |
| 731840 | | 6302007 | OPEL | Omega B (94>) |
| | | 52463046 | VAUXHALL | Omega |
| 731843 | | 6302004 | OPEL | Omega B (94>) |
| | | 52463054 | VAUXHALL | Omega |
| 731846 | | 1300184 | OPEL | Vectra B (95>99) |
| | | 52488365 | VAUXHALL | Vectra (95>2002) |
| 731847 | | 1300182 | OPEL | Vectra B (95>99) |
| 731856 | | 1640087770000 | DAIHATSU | Charade (G100) (87>93) |
| 731857 | | 1640087F48000 | DAIHATSU | Charade (G200) (93>) |
| 731866 | | 17700M72F20 | SUZUKI | Alto (SH410) |
| 731910 | | 7701352898 | RENAULT | Kangoo (2003>) |
| 731972 | | 46759742 | FIAT | Brava |
| 731974 | | 71736178 | FIAT | Brava |
| 731975 | | 7760959 | FIAT | Punto (93>99) |
| 731976 | | 7783504 | FIAT | Punto (93>99) |
| 731977 | | 46723249 | FIAT | Punto (93>99) |
| 731978 | | 7794871 | FIAT | Punto (93>99) |
| | | 7794871 | LANCIA | Y Ipsilon (95>2000) |
| 731979 | | 46773321 | FIAT | Barchetta (95>2003) |
| 731980 | | 7785122 | LANCIA | Y Ipsilon (95>2000) |
| 731981 | | 46420484 | FIAT | Brava |
| 731992 | | 1056616 | FORD | Ka (96>2008) |
| 732003 | | 1042588 | FORD | Fiesta (95>99) |
| | | 1E1615200A | MAZDA | 121 (JA/JB) (96>) |
| 732004 | | 46449096 | FIAT | Palio |
| 732005 | | 46750718 | FIAT | Palio |
| 732006 | | 46449104 | FIAT | Palio |
| 732007 | | 46417050 | FIAT | Palio |
| 732011 | | 60663070 | ALFA ROMEO | 156 (97>2003) |
| 732012 | | 60663071 | ALFA ROMEO | 156 (2003>) |
| 732013 | | 60690404 | ALFA ROMEO | 156 (2003>) |
| 732032 | | 1300152 | OPEL | Corsa B (93>2000) |
| | | 52459323 | VAUXHALL | Nova |
| 732050 | | 4501137 | OPEL | Movano |
| | | 7701046210 | RENAULT | Master (97>2003) |
| | | 9161437 | VAUXHALL | Movano |
| 732051 | | 7701045212 | RENAULT | Twingo I (93>98) |
| 732063 | | | RENAULT | Master (97>2003) |
| 732071 | | 7700836304 | RENAULT | Clio II (2001>) |
| 732072 | | 8200330848 | RENAULT | Kangoo (2003>) |
| 732090 | | 2015009103 | MERCEDES | 190 (201) |
| 732099 | | 17111712267 | BMW | 5 series E34 |
| 732120 | | 4729562 | SAAB | 9-3 (98>2003) |
| 732122 | | 4729588 | SAAB | 9-3 (98>2003) |
| 732123 | | 4729596 | SAAB | 9-3 (98>2003) |
| 732147 | | 46453389 | FIAT | Palio |



• **New** Nouveau **Nuevo** Novo **Nuovo** Nieuw **Neu** Nowość **Yeni** Новый N **Novy**

| Valeo | | OE | | |
|---|---|---|---|---|
| 732175 | | 1J0121253N | AUDI | A3 (96>2003) |
| | | 1J0121253N | SEAT | Leon |
| | | 1J0121253N | SKODA | Octavia (2000>2004) |
| | | 1J0121253N | VOLKSWAGEN | Bora |
| 732177 | | 7D0121253A | VOLKSWAGEN | Transporter (F7D) (96>2003) |
| 732198 | | 17111728905 | BMW | 3 series E30 |
| 732199 | | 17101715319 | BMW | Z3 |
| 732218 | | 46480388 | FIAT | Brava |
| 732248 | | 60690405 | ALFA ROMEO | 156 (2003>) |
| 732312 | | 52029100 | JEEP | Cherokee (77>2001) |
| 732315 | | 1635002204 | MERCEDES | M Class (163) |
| 732316 | | 7700425842 | RENAULT | Megane (95>99) |
| 732317 | | 6K0121253AD | SEAT | Cordoba (96>99) |
| 732323 | | 19010PT1003 | HONDA | Accord Aerodeck (90>93) |
| | | GRD168 | ROVER | 600 |
| 732325 | | B6S715200D | MAZDA | 323 (BG) (89>94) |
| 732326 | | B55715200B | MAZDA | 323 (BG) (89>94) |
| 732327 | | MB924972 | MITSUBISHI | Colt IV (91>96) |
| 732338 | | 7700430647 | RENAULT | Clio II (2001>) |
| 732345 | | B6FN15200 | MAZDA | 323 (BA) (94>96) |
| 732346 | | BPE715200 | MAZDA | 323 (BA) (94>96) |
| 732347 | | 1300185 | OPEL | Vectra B (95>99) |
| | | 52479098 | VAUXHALL | Vectra (95>2002) |
| 732348 | | 1300181 | OPEL | Vectra B (95>99) |
| | | 52479100 | VAUXHALL | Vectra (95>2002) |
| 732349 | | 1300178 | OPEL | Vectra B (95>99) |
| | | 52479093 | VAUXHALL | Vectra (95>2002) |
| 732361 | | 8D0121251P | AUDI | A4 (94>98) |
| | | 8D0121251P | SKODA | Superb |
| | | 8D0121251P | VOLKSWAGEN | Passat (2000>) |
| 732365 | | 8602566 | VOLVO | 850 |
| 732366 | | 86038544 | VOLVO | 940-960 |
| 732368 | | 86038528 | VOLVO | 740-760-780 |
| 732369 | | 13785902 | VOLVO | 240-260 |
| 732372 | | 8602117 | VOLVO | S40 (95>2004) |
| 732387 | | 7700430648 | RENAULT | Clio II (98>2001) |
| 732389 | | 2140000QAV | NISSAN | Kubistar |
| | | 7700314382 | RENAULT | Kangoo (2003>) |
| 732396 | | 1C0121253A | VOLKSWAGEN | New Beetle (98>2001) |
| 732397 | | 701121253K | VOLKSWAGEN | Transporter (F70) (90>96) |
| 732399 | | ESR4197 | LAND ROVER | Freelander (97>2003) |
| 732400 | | ESR4199 | LAND ROVER | Freelander (97>2003) |
| 732402 | | ESR2269 | LAND ROVER | Range Rover (94>2002) |
| 732405 | | 214100M100 | NISSAN | Almera (95>2000) |
| 732410 | | 45199FC371 | SUBARU | Forester (97>2001) |
| 732413 | | 1640022060 | TOYOTA | Celica (ZT230) (99>) |
| 732415 | | 1640017020 | TOYOTA | Land Cruiser (BJ80) |
| 732416 | | 1640074600 | TOYOTA | MR 2 (AW20) |
| 732417 | | 1640022110 | TOYOTA | MR 2 (AW30) |

| Valeo | | OE | | |
|---|---|---|---|---|
| 732420 | | 164007A282 | TOYOTA | Picnic (96>2001) |
| 732421 | | 164000J010 | TOYOTA | Yaris |
| 732426 | | 4740097 | CHRYSLER | Neon |
| 732427 | | 1J0121253S | AUDI | TT (98>2006) |
| | | 1J0121253S | SEAT | Leon |
| | | 1J0121253S | VOLKSWAGEN | Bora |
| 732435 | | 068121253E | VOLKSWAGEN | Transporter (F24) (79>92) |
| 732436 | | 353121253R | VOLKSWAGEN | Passat (88>93) |
| 732437 | | 1H0121253AE | VOLKSWAGEN | Golf III (91>97) |
| 732438 | | 353121253N | VOLKSWAGEN | Passat (88>93) |
| 732442 | | 6315000502 | MERCEDES | MB100 |
| 732446 | | 2105001203 | MERCEDES | E Class (210) |
| 732447 | | 1405002303 | MERCEDES | S Class (140) |
| 732450 | | 2025004103 | MERCEDES | C Class (202) (93>2001) |
| 732451 | | 2025005203 | MERCEDES | C Class (202) (93>2001) |
| 732454 | | 1295000703 | MERCEDES | SL (129) |
| 732456 | | 17111723941 | BMW | 5 series E34 |
| 732458 | | 1245001402 | MERCEDES | E Class (124) |
| 732459 | | 4635001200 | MERCEDES | G Class (463) |
| 732460 | | 1245006303 | MERCEDES | E Class (124) |
| 732462 | | 2105003203 | MERCEDES | E Class (210) |
| 732471 | | 6385012001 | MERCEDES | Vito (96>2003) |
| 732472 | | 9015003400 | MERCEDES | Sprinter (95>) |
| 732474 | | 7700417175 | RENAULT | Clio II (2001>) |
| 732475 | | B54715200A | MAZDA | 323 (BG) (89>94) |
| 732476 | | 1640076092 | TOYOTA | Previa (TCR) (90>2000) |
| 732479 | | 6U0121253A | SKODA | Felicia (94>2001) |
| | | 6U0121253A | VOLKSWAGEN | Caddy (95>2004) |
| 732483 | | 96144847 | DAEWOO | Nexia |
| 732484 | | 214109C101 | NISSAN | Serena (C23M) |
| 732487 | | 2531034000 | HYUNDAI | Sonata (93>98) |
| 732488 | | 2531022025 | HYUNDAI | Accent (94>99) |
| 732497 | | 1023920 | FORD | Transit (95>99) |
| 732503 | | 46737569 | FIAT | Multipla (2004>) |
| 732505 | | 60663808 | ALFA ROMEO | 166 (2003>) |
| 732517 | | 133041 | CITROEN | Xsara (97>2000) |
| | | 133041 | PEUGEOT | 306 (97>) |
| 732518 | | 133055 | CITROEN | Xsara (97>2000) |
| | | 133055 | PEUGEOT | 306 (97>) |
| 732520 | | 133046 | CITROEN | Xsara (97>2000) |
| | | 133049 | PEUGEOT | 306 (97>) |
| 732523 | | 2140000QAY | NISSAN | Kubistar |
| | | 8200164413 | RENAULT | Clio II (2001>) |
| 732524 | | MR299522 | MITSUBISHI | Carisma (95>99) |
| | | 86020658 | VOLVO | S40 (95>2004) |
| 732525 | | MR187415 | MITSUBISHI | Carisma (95>99) |
| | | 86021078 | VOLVO | S40 (95>2004) |
| 732528 | | 214109F500 | NISSAN | Primera (P11) (96>2001) |
| 732529 | | 214102F600 | NISSAN | Primera (P11) (96>2001) |

| Valeo | | OE | | |
|---|---|---|---|---|
| 732534 | | 133051 | CITROEN | Xsara (97>2000) |
| | | 133051 | PEUGEOT | 306 (93>97) |
| 732535 | | 133045 | CITROEN | Xsara (97>2000) |
| | | 133045 | PEUGEOT | 306 (93>97) |
| 732538 | | FE4515200 | MAZDA | 626 (GC) (82>87) |
| 732539 | | MB660562 | MITSUBISHI | Colt IV (91>96) |
| 732540 | | MB538543 | MITSUBISHI | Lancer F (C6/7) (88>95) |
| 732542 | | 164007A080 | TOYOTA | Celica (ST200) (93>99) |
| 732543 | | 1640011350 | TOYOTA | Starlet (EP/NP8) (89>95) |
| 732544 | | 7701049754 | RENAULT | Espace III (2000>2002) |
| 732548 | | 1300241 | OPEL | Astra G (98>) |
| | | 9201018 | VAUXHALL | Astra IV (98>) |
| 732549 | | 1300257 | OPEL | Astra G (98>) |
| | | 93177121 | VAUXHALL | Astra IV (98>) |
| 732550 | | 1300215 | OPEL | Astra G (98>) |
| | | 9193268 | VAUXHALL | Astra IV (98>) |
| 732551 | | 1300212 | OPEL | Astra G (98>) |
| | | 9193264 | VAUXHALL | Astra IV (98>) |
| 732552 | | 52029046 | JEEP | Cherokee (77>2001) |
| 732557 | | 71736183 | FIAT | Brava |
| 732559 | | 7700429769 | RENAULT | Megane (98>) |
| 732561 | | 1640015190 | TOYOTA | Celica (ST16) (85>89) |
| 732563 | | 133303 | CITROEN | Berlingo (96>2002) |
| | | 133303 | PEUGEOT | Partner (96>2002) |
| 732564 | | 1331CP | CITROEN | Berlingo (96>2002) |
| | | 133052 | PEUGEOT | 306 (97>) |
| 732565 | | 133057 | CITROEN | Berlingo (96>2002) |
| | | 133057 | PEUGEOT | Partner (96>2002) |
| 732567 | | 133044 | PEUGEOT | 406 (95>99) |
| 732569 | | 5010382645 | RENAULT VI | Mascott |
| 732570 | | 5010435102 | RENAULT VI | Mascott |
| 732577 | | 1331CW | CITROEN | Xsara (97>2000) |
| | | 1331CW | PEUGEOT | 306 (97>) |
| 732578 | | 46778148 | FIAT | Punto II (99>2003) |
| 732580 | | 46544775 | LANCIA | Lybra |
| 732582 | | 46544780 | LANCIA | Lybra |
| 732584 | | 46753255 | LANCIA | Lybra |
| 732587 | | 1685000602 | MERCEDES | A Class (168) (97>2003) |
| 732588 | | 1685000002 | MERCEDES | A Class (168) (97>2003) |
| 732589 | | 21400G9806 | NISSAN | Patrol 260 (84>) |
| 732591 | | 1245002002 | MERCEDES | E Class (124) |
| 732592 | | 1953239 | FORD | Maverick (93>98) |
| | | 214100F121 | NISSAN | Terrano II (R20) (93>2001) |
| 732593 | | 17112244542 | BMW | 5 series E34 |
| 732596 | | 21400C8200 | NISSAN | Patrol 160 (80>85) |
| 732598 | | 1331FT | CITROEN | C5 (2001>2004) |
| | | 1331FT | PEUGEOT | 406 (99>) |
| 732599 | | 1331EE | PEUGEOT | 406 (95>99) |
| 732600 | | 133091 | CITROEN | C5 (2001>2004) |

| Valeo | | OE | | |
|---|---|---|---|---|
| 732606 | | 1300173 | OPEL | Corsa B (93>2000) |
| | | 90531547 | VAUXHALL | Corsa I (93>2000) |
| 732607 | | 1300205 | OPEL | Corsa B (93>2000) |
| | | 9180595 | VAUXHALL | Corsa I (93>2000) |
| 732608 | | 6006004494 | RENAULT | Trafic (95>97) |
| 732612 | | MR299618 | MITSUBISHI | Colt V (96>2003) |
| 732613 | | MR299619 | MITSUBISHI | Colt V (96>2003) |
| 732614 | | 1640016790 | TOYOTA | Corolla (110) (97>99) |
| 732617 | | 133070 | CITROEN | C5 (2001>2004) |
| 732618 | | 133043 | CITROEN | Xantia (97>2002) |
| 732620 | | 133058 | CITROEN | Xsara (97>2000) |
| | | 133058 | PEUGEOT | 306 (97>) |
| 732621 | | 7700428082 | DACIA | Logan |
| | | 2140000QAX | NISSAN | Kubistar |
| | | 7700428082 | RENAULT | Clio II (2001>) |
| 732623 | | 46547089 | FIAT | Brava |
| 732625 | | 1092370 | FORD | Fiesta (99>2002) |
| 732626 | | 1092360 | FORD | Fiesta (95>99) |
| 732685 | | 50010242 | FIAT | Fiorino (146) (93>2000) |
| 732687 | | 8200240818 | RENAULT | Kangoo (2003>) |
| 732692 | | 1330E3 | CITROEN | Evasion (98>2002) |
| | | 1489463080 | FIAT | Ulysse (98>2002) |
| | | 1482543080 | LANCIA | Zeta |
| | | 1330E3 | PEUGEOT | 806 (98>2002) |
| 732694 | | 1300220 | OPEL | Agila (2000>2007) |
| | | 9208632 | VAUXHALL | Agila (2000>2007) |
| 732696 | | 60690408 | ALFA ROMEO | 166 (2003>) |
| 732698 | | 6K0121253AG | SEAT | Cordoba (99>2002) |
| 732704 | | 5017404AB | CHRYSLER | PT Cruiser |
| 732705 | | 46407450 | FIAT | Punto (93>99) |
| 732706 | | 1635000303 | MERCEDES | M Class (163) |
| 732710 | | 6K0121253AS | SEAT | Cordoba (96>99) |
| | | 6K0121253AS | VOLKSWAGEN | Polo (99>2001) |
| 732713 | | 52028379 | JEEP | Cherokee (77>2001) |
| 732717 | | 2140000QAA | NISSAN | Kubistar |
| | | 8200072713 | RENAULT | Kangoo (2003>) |
| 732718 | | 214106F600 | NISSAN | Micra (K11) (2000>2002) |
| 732719 | | 1770083E00 | SUZUKI | Ignis |
| 732720 | | 7700428658 | RENAULT | Clio II (2001>) |
| 732721 | | 8200343476 | DACIA | Logan |
| | | 8200343476 | RENAULT | Clio II (2001>) |
| 732722 | | 60690283 | ALFA ROMEO | 156 (2003>) |
| 732723 | | 1300211 | OPEL | Astra G (98>) |
| | | 90570723 | VAUXHALL | Astra IV (98>) |
| 732724 | | 90570725 | OPEL | Astra G (98>) |
| | | 90570726 | VAUXHALL | Astra IV (98>) |
| 732726 | | B5C715200A | MAZDA | Demio |
| 732729 | | | OPEL | Astra G (98>) |
| | | 9193265 | VAUXHALL | Astra IV (98>) |



• **New** Nouveau **Nuevo** Novo **Nuovo** Nieuw **Neu** Nowość **Yeni** Новый N **Novy**

| Valeo | | OE | | |
|---|---|---|---|---|
| 732730 | | 46743394 | ALFA ROMEO | 147 (2000>2004) |
| 732731 | | 1132658 | FORD | Focus (2001>2003) |
| 732732 | | 1132655 | FORD | Focus (2001>2003) |
| 732735 | | 1091934 | FORD | Focus (2001>2003) |
| 732736 | | 1635000103 | MERCEDES | M Class (163) |
| 732737 | | 7700436916 | RENAULT | Clio II (2001>) |
| 732740 | | 2035001103 | MERCEDES | C Class (203) (2000>2003) |
| 732741 | | 2035001003 | MERCEDES | C Class (203) (2000>2003) |
| 732742 | | 2035000803 | MERCEDES | C Class (203) (2000>2003) |
| 732743 | | 2035003903 | MERCEDES | C Class (203) (2000>2003) |
| 732748 | | MB890957 | MITSUBISHI | Montero |
| 732750 | | 1770060G01 | SUZUKI | Baleno |
| 732753 | | 1640002280 | TOYOTA | Avensis (97>2000) |
| 732754 | | 1640003190 | TOYOTA | Avensis (2000>2003) |
| 732759 | | GRD162 | ROVER | 200 (89>95) |
| 732761 | | 8200049080 | RENAULT | Clio II (98>2001) |
| 732765 | | 8200049077 | RENAULT | Clio II (98>2001) |
| 732780 | | 4644266 | CHRYSLER | Grand Voyager (91>96) |
| 732782 | | 52079597AB | JEEP | Cherokee (77>2001) |
| 732785 | | 8Z0121251D | AUDI | A2 |
| 732786 | | 1108999 | FORD | Galaxy (2000>) |
| | | 7M3121253A | SEAT | Alhambra |
| | | 7M3121253A | VOLKSWAGEN | Sharan (2000>2003) |
| 732787 | | 46518233 | FIAT | Brava |
| 732788 | | 46534995 | FIAT | Brava |
| 732789 | | 46558704 | FIAT | Seicento |
| 732790 | | 1109113 | FORD | Galaxy (2000>) |
| | | 7M3121253B | SEAT | Alhambra |
| | | 7M3121253B | VOLKSWAGEN | Sharan (2000>2003) |
| 732791 | | 1109232 | FORD | Galaxy (2000>) |
| 732792 | | 46777410 | FIAT | Panda |
| 732794 | | 133087 | PEUGEOT | 106 (96>2003) |
| 732795 | | 93277988 | OPEL | Astra G (98>) |
| | | | VAUXHALL | Astra IV (98>) |
| 732797 | | 7M0121253K | SEAT | Alhambra |
| | | 7M0121253K | VOLKSWAGEN | Sharan (95>2000) |
| 732798 | | 4403216 | OPEL | Movano |
| | | 7701049664 | RENAULT | Master (97>2003) |
| | | 9111216 | VAUXHALL | Movano |
| 732807 | | 1330A6 | CITROEN | Saxo (99>) |
| 732811 | | 8D0121251BA | AUDI | A4 (99>2001) |
| 732812 | | 46750717 | FIAT | Palio |
| 732817 | | 8200189288 | DACIA | Logan |
| | | 8200189288 | RENAULT | Megane Classic (99>2002) |
| 732819 | | 7701045211 | RENAULT | Twingo I (93>98) |
| 732824 | | 1300233 | OPEL | Corsa C (2000>2003) |
| | | 9196694 | VAUXHALL | Corsa II (2000>2003) |
| 732825 | | 1300236 | OPEL | Corsa C (2000>2003) |
| | | 9201955 | VAUXHALL | Corsa II (2000>2003) |

| Valeo | | OE | | |
|---|---|---|---|---|
| 732826 | | 1300237 | OPEL | Corsa C (2000>2003) |
| | | 9201956 | VAUXHALL | Corsa II (2000>2003) |
| 732827 | | 8200008764 | RENAULT | Espace IV (2002>2006) |
| 732828 | | 8200302463 | RENAULT | Espace IV (2002>2006) |
| 732830 | | 1330A4 | CITROEN | C8 |
| | | 9641728080 | FIAT | Ulysse (2002>) |
| | | 9641728080 | LANCIA | Phedra |
| | | 1330A4 | PEUGEOT | 807 |
| 732831 | | 1330C2 | CITROEN | C2 |
| | | 1330C2 | PEUGEOT | 1007 |
| 732839 | | 8E0121251 | AUDI | A4 (2000>2004) |
| 732845 | | 701121253M | VOLKSWAGEN | Transporter (F7D) (96>2003) |
| 732846 | | 2140000QAS | NISSAN | Primastar (2002>2006) |
| | | 4408645 | OPEL | Vivaro (2001>2006) |
| | | 7700312899 | RENAULT | Trafic (2001>2006) |
| | | 91166001 | VAUXHALL | Vivaro (2001>2006) |
| 732849 | | 2115003402 | MERCEDES | CLS (2004>2010) |
| 732851 | | 46827082 | FIAT | Punto II (99>2003) |
| 732853 | | 2140000QAN | NISSAN | Primastar (2002>2006) |
| | | 4414161 | OPEL | Vivaro (2001>2006) |
| | | 8200073817 | RENAULT | Trafic (2001>2006) |
| | | 91166000 | VAUXHALL | Vivaro (2001>2006) |
| 732854 | | 51702463 | ALFA ROMEO | 147 (2000>2004) |
| 732855 | | 2115003202 | MERCEDES | CLS (2004>2010) |
| 732862 | | 6Q0121253Q | SEAT | Cordoba (2002>) |
| | | 6Q0121253Q | SKODA | Fabia (99>2004) |
| | | 6Q0121253Q | VOLKSWAGEN | Fox |
| 732863 | | 6Q0121253K | SEAT | Cordoba (2002>) |
| | | 6Q0121253J | SKODA | Fabia (99>2004) |
| | | 6Q0121253K | VOLKSWAGEN | Polo (2001>) |
| 732864 | | 6Q0121253R | SEAT | Cordoba (2002>) |
| | | 6Q0121253R | SKODA | Fabia (99>2004) |
| | | 6Q0121253R | VOLKSWAGEN | Fox |
| 732866 | | 8200189286 | RENAULT | Megane (98>) |
| 732867 | | 1J0121253AC | SEAT | Leon |
| | | 1J0121253AC | VOLKSWAGEN | Bora |
| 732870 | | 2115002302 | MERCEDES | E Class (211) (2002>2006) |
| 732872 | | 1K0121253AA | AUDI | A3 (2003>2008) |
| | | 1K0121253AA | SEAT | Altea |
| | | 1K0121253H | SKODA | Octavia (2004>) |
| | | 1K0121253AA | VOLKSWAGEN | Golf Plus (2005>) |
| 732873 | | 8200115541 | RENAULT | Mégane II |
| 732874 | | 8200115542 | RENAULT | Mégane II |
| 732876 | | 1300245 | OPEL | Signum |
| | | 24418341 | SAAB | 9-3 (2002>) |
| | | 24418341 | VAUXHALL | Signum (2003>2005) |
| 732877 | | 51770410 | FIAT | Croma II (2005>2007) |
| | | 1300246 | OPEL | Signum |
| | | 24418343 | VAUXHALL | Signum (2003>2005) |

| Valeo | | OE | | |
|---|---|---|---|---|
| 732878 | | 51770411 | FIAT | Croma II (2005>2007) |
| | | 1300247 | OPEL | Signum |
| | | 24418344 | VAUXHALL | Signum (2003>2005) |
| 732879 | | 1300244 | OPEL | Signum |
| | | 24418338 | SAAB | 9-3 (2002>) |
| | | 24418338 | VAUXHALL | Signum (2003>2005) |
| 732880 | | 1330A5 | CITROEN | C8 |
| | | 9641728180 | FIAT | Ulysse (2002>) |
| | | 1330A5 | PEUGEOT | 807 |
| 732881 | | 1330E7 | CITROEN | C8 |
| | | 9641728380 | FIAT | Ulysse (2002>) |
| | | 9641728380 | LANCIA | Phedra |
| | | 1330E7 | PEUGEOT | 807 |
| 732882 | | 1330A7 | PEUGEOT | 106 (96>2003) |
| 732883 | | 5072260AA | CHRYSLER | Grand Voyager (2004>2008) |
| 732885 | | 1330H2 | PEUGEOT | 206 |
| 732886 | | 1330H5 | PEUGEOT | 206 |
| 732887 | | 1330J3 | CITROEN | Xsara Picasso |
| 732888 | | 1330H0 | CITROEN | Xsara (2000>) |
| 732890 | | 1330G3 | CITROEN | Xsara (2000>) |
| | | 1330G3 | PEUGEOT | 307(2001>2004) |
| 732891 | | 1330G4 | CITROEN | Xsara (2000>) |
| | | 1330G4 | PEUGEOT | 307(2001>2004) |
| 732892 | | 1330F4 | CITROEN | C4 |
| | | 1330F4 | PEUGEOT | 307 (2005>) |
| 732893 | | 1330F6 | CITROEN | C4 |
| | | 1330F6 | PEUGEOT | 206 |
| 732894 | | 1330G9 | CITROEN | C4 |
| | | 1330G9 | PEUGEOT | 307 (2005>) |
| 732895 | | 133096 | CITROEN | Xsara (2000>) |
| | | 1330F7 | PEUGEOT | 307(2001>2004) |
| 732896 | | 1330G8 | PEUGEOT | 307(2001>2004) |
| 732897 | | 1685001602 | MERCEDES | A Class (168) (97>2003) |
| 732900 | | 2035002303 | MERCEDES | C Class (203) (2004>) |
| 732902 | | 2140000QAT | NISSAN | Primastar (2002>2006) |
| | | 4414578 | OPEL | Vivaro (2001>2006) |
| | | 8200297815 | RENAULT | Trafic (2001>2006) |
| | | 93852185 | VAUXHALL | Vivaro (2001>2006) |
| 732903 | | 21410AY602 | NISSAN | Micra (2005>) |
| | | 8200138738 | RENAULT | Clio III (2005>) |
| 732904 | | 1330G0 | PEUGEOT | 206 |
| 732906 | | 1330G6 | PEUGEOT | 206 |
| 732908 | | 1330G2 | CITROEN | C4 |
| | | 1330G2 | PEUGEOT | 307 (2005>) |
| 732909 | | 1330H3 | CITROEN | Xsara Picasso |
| 732910 | | 1330G1 | PEUGEOT | 206 |
| 732911 | | 4412816 | OPEL | Vivaro (2001>2006) |
| | | 8200297816 | RENAULT | Trafic (2001>2006) |
| | | 93852186 | VAUXHALL | Vivaro (2001>2006) |

| Valeo | | OE | | |
|---|---|---|---|---|
| 732913 | | 51708727 | FIAT | Idea (2003>2007) |
| | | 51708727 | LANCIA | Musa (2004>2006) |
| 732917 | | 2141000QAA | NISSAN | Interstar |
| | | 4415064 | OPEL | Movano (2006>) |
| | | 7701057117 | RENAULT | Master (2003>) |
| | | 93179722 | VAUXHALL | Movano |
| 732918 | | 2140000QAJ | NISSAN | Interstar |
| | | 4414972 | OPEL | Movano |
| | | 7701057119 | RENAULT | Master (2003>) |
| | | 93179354 | VAUXHALL | Movano |
| 732919 | | 2140000QAM | NISSAN | Interstar |
| | | 4415068 | OPEL | Movano (2006>) |
| | | 7701057120 | RENAULT | Master (2003>) |
| | | 93179729 | VAUXHALL | Movano |
| 732923 | | 51724188 | FIAT | Punto II (2003>) |
| 732924 | | 46798741 | FIAT | Panda (2003>) |
| 732925 | | 46798743 | FIAT | Panda (2003>) |
| 732930 | | 1330Q5 | CITROEN | C2 |
| | | 1330Q5 | PEUGEOT | 1007 |
| 732939 | | 51742221 | LANCIA | Thesis |
| 732940 | | 4400916 | OPEL | Arena |
| | | 7700310123 | RENAULT | Trafic (97>2001) |
| | | 9108916 | VAUXHALL | Arena |
| 732944 | | 1330H8 | CITROEN | C8 |
| | | 1330H8 | PEUGEOT | 807 |
| 732945 | | 1330J6 | CITROEN | C8 |
| | | 1330J6 | PEUGEOT | 807 |
| 732946 | | 8200357536 | RENAULT | Mégane II |
| 732947 | | 24418342 | SAAB | 9-3 (2002>) |
| 732948 | | 46833511 | FIAT | Albea |
| 732950 | | 1640002310 | TOYOTA | Avensis (97>2000) |
| 732951 | | 1640003180 | TOYOTA | Avensis (2000>2003) |
| 732952 | | 2D0121253E | VOLKSWAGEN | LT II (96>2003) |
| 732953 | | 6N0121253AE | VOLKSWAGEN | Lupo |
| 732956 | | 5142488AA | CHRYSLER | Grand Voyager (2004>2008) |
| 732957 | | 1C0121253D | VOLKSWAGEN | New Beetle (2001>2005) |
| 732960 | | 8200245596 | RENAULT | Clio II (2001>) |
| 732962 | | 1213022 | FORD | Focus (2001>) |
| 732963 | | 8E0121251A | AUDI | A4 (2000>2004) |
| 733062 | | 6Q0121201HA | SKODA | Fabia (99>2004) |
| | | 6Q0121201BT | VOLKSWAGEN | Polo (2001>) |
| 733074 | | 8Z0121251C | AUDI | A2 |
| 733075 | | 8200211563 | RENAULT | Clio II (2001>2005) |
| | | 8200211563 | RENAULT | Clio II (2001>) |
| 733076 | | JRB101150 | MG | MG ZS |
| | | JRB101150 | ROVER | 45 (2000>2004) |
| 733077 | | JRB101160 | MG | MG ZS |
| | | JRB101160 | ROVER | 45 (2000>2004) |
| 734101 | | 1640087727000 | DAIHATSU | Cuore (L55/60) (80>85) |



• **New** Nouveau **Nuevo** Novo **Nuovo** Nieuw **Neu** Nowość **Yeni** Новый N□ **Novy**

| Valeo | | OE | | |
|---|---|---|---|---|
| 734102 | | 1640087F37000 | DAIHATSU | Applause (A101) (97>) |
| 734103 | | 1640087F41000 | DAIHATSU | Applause (A100) (89>97) |
| 734104 | | 1640087F12000 | DAIHATSU | Charade (G100) (87>93) |
| 734105 | | 1640097210000 | DAIHATSU | Cuore (L701) (98>) |
| 734106 | | 1640097201000 | DAIHATSU | Move (L901) (99>) |
| 734109 | | 19010P0HA51 | HONDA | Accord Aerodeck (93>97) |
| 734110 | | 19010P3F902 | HONDA | CR-V (97>2002) |
| 734112 | | 19010PEA901 | HONDA | Odyssey |
| 734114 | | 19010PAAA02 | HONDA | Accord coupe (97>2002) |
| 734117 | | 19010PEL003 | HONDA | HR-V |
| 734118 | | WL1115200B | MAZDA | MPV |
| 734119 | | BP4W15200A | MAZDA | MX5 (2000>) |
| 734120 | | B6BF15200G | MAZDA | 323 (BA) (94>96) |
| 734121 | | B3C815200F | MAZDA | 121 (DB) (90>96) |
| 734122 | | RF2L15200C | MAZDA | 323 (BJ) (98>2000) |
| 734123 | | ZL0115200C | MAZDA | 323 (BJ) (98>2000) |
| 734124 | | ZL0215200 | MAZDA | 323 (BJ) (98>2000) |
| 734126 | | FP8515200A | MAZDA | Premacy (99>2001) |
| 734128 | | MR161362 | MITSUBISHI | Galant IV (92>96) |
| 734129 | | MR212455 | MITSUBISHI | Galant V (96>2003) |
| 734132 | | MB845797 | MITSUBISHI | Galant IV (92>96) |
| 734135 | | MB660216 | MITSUBISHI | Space Wagon (91>98) |
| 734136 | | MB906097 | MITSUBISHI | Space Runner |
| 734137 | | MB906098 | MITSUBISHI | Space Runner |
| 734138 | | MB924249 | MITSUBISHI | Space Runner |
| 734139 | | MB924254 | MITSUBISHI | Space Runner |
| 734141 | | MB906093 | MITSUBISHI | Space Runner |
| 734142 | | MB845814 | MITSUBISHI | Galant IV (92>96) |
| 734143 | | MR258669 | MITSUBISHI | Challenger |
| 734144 | | MR239627 | MITSUBISHI | Challenger |
| 734145 | | MR127889 | MITSUBISHI | Space Gear |
| 734146 | | MR127283 | MITSUBISHI | Space Gear |
| 734149 | | 2146069F00 | NISSAN | 200 SX (S14) (94>) |
| 734150 | | 214601L015 | NISSAN | Maxima QX (A32) |
| 734151 | | 214100M203 | NISSAN | Almera (95>2000) |
| 734152 | | 2146062J01 | NISSAN | Primera (P10) (90>96) |
| 734155 | | 214100M204 | NISSAN | Almera (95>2000) |
| 734157 | | 45199KC002 | SUBARU | Vivio |
| 734158 | | 45199AC071 | SUBARU | Legacy (94>97) |
| 734159 | | 1770060B32 | SUZUKI | Swift (SF) (89>) |
| 734161 | | 1770052D10 | SUZUKI | Grand Vitara (98>2005) |
| 734162 | | 1770066D01 | SUZUKI | Grand Vitara (98>2005) |
| 734164 | | 1770054G00 | SUZUKI | Liana |
| 734165 | | 1770054G10 | SUZUKI | Liana |
| 734166 | | 1770071C01 | SUZUKI | Swift (SF) (89>) |
| 734170 | | 1770081A00 | SUZUKI | Jimny |
| 734171 | | 1770080G00 | SUZUKI | Ignis |
| 734172 | | 164007A110 | TOYOTA | RAV4 (94>2000) |
| 734173 | | 1640046290 | TOYOTA | Supra (JZA80) (93>) |

| Valeo | | OE | | |
|---|---|---|---|---|
| 734174 | | 1640046310 | TOYOTA | Supra (JZA80) (93>) |
| 734175 | | 1640046320 | TOYOTA | Supra (JZA80) (93>) |
| 734176 | | 1640011830 | TOYOTA | Paseo (95>99) |
| 734177 | | 1640020090 | TOYOTA | Camry (96>2001) |
| 734180 | | 1640074640 | TOYOTA | Celica (ST16) (85>89) |
| 734181 | | 1640074560 | TOYOTA | Celica (ST18) (89>93) |
| 734182 | | 1640022121 | TOYOTA | RAV4 (2000>) |
| 734183 | | 1640028140 | TOYOTA | RAV4 (2000>) |
| 734185 | | 1640066040 | TOYOTA | Land Cruiser (BJ80) |
| 734189 | | 1640017240 | TOYOTA | Land Cruiser (BJ80) |
| 734190 | | 1640066121 | TOYOTA | Land Cruiser (HD/UZ 10) |
| 734191 | | 1640066111 | TOYOTA | Land Cruiser (HD/UZ 10) |
| 734192 | | 1640050211 | TOYOTA | Land Cruiser (HD/UZ 10) |
| 734193 | | 1640003061 | TOYOTA | Camry (91>96) |
| 734194 | | 1640028230 | TOYOTA | RAV4 (2000>) |
| 734196 | | MR312099 | MITSUBISHI | Space Wagon (98>) |
| 734197 | | MR373172 | MITSUBISHI | Pajero Pinin (99>) |
| 734198 | | MR431239 | MITSUBISHI | Pajero Pinin (99>) |
| 734199 | | 1640027040 | TOYOTA | Corolla (120) (2001>) |
| 734200 | | 1640021180 | TOYOTA | Corolla (120) (2001>) |
| 734201 | | 1640028100 | TOYOTA | Previa (R30) (2000>) |
| 734203 | | 1770063E20 | SUZUKI | Swift (96>2005) |
| 734204 | | 1640075160 | TOYOTA | Land Cruiser (KZ/VZ9) |
| 734205 | | 1640067130 | TOYOTA | Land Cruiser (KZ/VZ9) |
| 734206 | | 1640067140 | TOYOTA | Land Cruiser (KZ/VZ9) |
| 734207 | | JEA315200B | MAZDA | MPV |
| 734208 | | 1640087294000 | DAIHATSU | Move (L601) (97>99) |
| 734209 | | 1640087286000 | DAIHATSU | Move (L601) (97>99) |
| 734210 | | 1640087F47000 | DAIHATSU | Charade (G200) (93>) |
| 734211 | | 45199AA121 | SUBARU | Legacy (89>93) |
| 734212 | | 45199AC041 | SUBARU | Legacy (94>97) |
| 734213 | | 1770077E20 | SUZUKI | Grand Vitara (98>2005) |
| 734214 | | 1770078E10 | SUZUKI | Grand Vitara (98>2005) |
| 734215 | | 214609F511 | NISSAN | Primera (P11) (96>2001) |
| 734216 | | 164007A490 | TOYOTA | RAV4 (94>2000) |
| 734217 | | 164007A500 | TOYOTA | RAV4 (94>2000) |
| 734218 | | 19010PWAG01 | HONDA | Jazz (2002>) |
| 734219 | | 46473867 | FIAT | Punto (93>99) |
| 734221 | | 46527489 | FIAT | Punto (93>99) |
| | | 46527489 | LANCIA | Y Ipsilon (95>2000) |
| 734224 | | 46739749 | FIAT | Punto II (99>2003) |
| 734225 | | 46788046 | FIAT | Punto II (99>2003) |
| 734228 | | 46799894 | FIAT | Stilo (2001>2004) |
| 734229 | | 46745809 | FIAT | Stilo (2001>2004) |
| 734230 | | 500396428 | IVECO | Daily (99>) |
| 734231 | | 504008110 | IVECO | Daily (99>) |
| 734235 | | 46472572 | LANCIA | Y Ipsilon (95>2000) |
| 734236 | | 71736189 | LANCIA | Y Ipsilon (95>2000) |
| 734237 | | 46763322 | LANCIA | Y Ipsilon (2000>2003) |

| Valeo | | OE | | |
|---|---|---|---|---|
| 734238 | | 46763325 | LANCIA | Y Ipsilon (2000>2003) |
| 734239 | | 7776507 | FIAT | Brava |
| 734242 | | 90541496 | VAUXHALL | Astra III (91>98) |
| 734246 | | 21400AX600 | NISSAN | Micra (2005>) |
| | | 8200365427 | RENAULT | Clio III (2005>) |
| 734247 | | 21460AX800 | NISSAN | Micra (2005>) |
| 734248 | | 96182261 | DAEWOO | Lanos |
| 734249 | | 96182260 | DAEWOO | Lanos |
| 734250 | | 96314162 | DAEWOO | Matiz (98>2000) |
| 734251 | | 96322941 | DAEWOO | Matiz (2000>) |
| 734252 | | 96181369 | DAEWOO | Lacetti |
| 734253 | | 2531025100 | HYUNDAI | Accent (99>2003) |
| 734254 | | 2531002151 | HYUNDAI | Amica |
| 734255 | | 2531002100 | HYUNDAI | Amica |
| 734256 | | 2531028050 | HYUNDAI | Elantra |
| 734258 | | 2531029750 | HYUNDAI | Coupe (95>2001) |
| 734259 | | 2531026000 | HYUNDAI | Santa Fé |
| 734261 | | 2531034050 | HYUNDAI | Sonata (93>98) |
| 734262 | | KK33115200 | KIA | Pride |
| 734263 | | 0K30C15200B | KIA | Rio (2000>2005) |
| 734264 | | 0K20115200B | KIA | Mentor |
| 734265 | | 0K2A215200B | KIA | Sephia II |
| 734266 | | 2531025050 | HYUNDAI | Accent (99>2003) |
| 734267 | | 2531024002 | HYUNDAI | Excel (89>94) |
| 734268 | | 8E0121251J | AUDI | A4 (2000>2004) |
| 734269 | | 8E0121251L | AUDI | A4 (2000>2004) |
| 734270 | | 8E0121251Q | AUDI | A4 (2000>2004) |
| 734271 | | 1300153 | OPEL | Corsa B (93>2000) |
| | | 52459322 | VAUXHALL | Corsa I (93>2000) |
| 734272 | | 1325832 | FORD | Fiesta (2002>2005) |
| 734273 | | 1325831 | FORD | Fiesta (2002>2005) |
| | | C20115200 | MAZDA | 2 (2003>2005) |
| 734274 | | 1359798 | FORD | Fiesta (2002>2005) |
| | | Y40115200 | MAZDA | 2 (2003>2005) |
| 734276 | | 17119071518 | BMW | 3 series E46 |
| 734277 | | 17111436060 | BMW | 5 series E39 |
| 734278 | | 133068 | CITROEN | C5 (2001>2004) |
| | | 133068 | PEUGEOT | 406 (99>) |
| 734279 | | 1330R2 | CITROEN | C5 (2001>2004) |
| | | 1330R2 | PEUGEOT | 406 (99>) |
| 734280 | | 133078 | CITROEN | C5 (2001>2004) |
| | | 133078 | PEUGEOT | 406 (99>) |
| 734281 | | 1330R1 | CITROEN | C5 (2001>2004) |
| 734282 | | 1330Q6 | CITROEN | C5 (2001>2004) |
| | | 133079 | PEUGEOT | 607 (2000>2004) |
| 734283 | | 46842846 | ALFA ROMEO | 147 (2000>2004) |
| 734284 | | 21410JD00E | NISSAN | Qashqai |
| | | 21410JD00E | NISSAN | Qashqai |
| | | 6025313331 | RENAULT | Espace III (2000>2002) |

| Valeo | | OE | | |
|---|---|---|---|---|
| 734285 | | 6025306734 | RENAULT | Espace III (96>2000) |
| 734286 | | 1142808 | FORD | Mondeo (2000>) |
| 734287 | | 1142810 | FORD | Mondeo (2000>) |
| 734288 | | 1142812 | FORD | Mondeo (2000>) |
| 734289 | | 17112245511 | BMW | 3 series E36 |
| 734290 | | 19010PFTE00 | HONDA | Civic V (MA/MB) (95>2001) |
| | | PCC105520 | MG | MG ZS |
| | | GRD933 | ROVER | 45 (2000>2004) |
| 734291 | | 4596740 | FORD | Transit (2000>) |
| 734292 | | 4572061 | FORD | Transit (2000>) |
| 734293 | | 4596701 | FORD | Transit (2000>) |
| 734301 | | 17111740699 | BMW | 5 series E39 |
| 734302 | | 1300251 | OPEL | Signum |
| | | 13108569 | VAUXHALL | Signum (2003>2005) |
| 734303 | | 1036597 | FORD | Cougar |
| 734318 | | 1715000003 | MERCEDES | SLK (171) (2004>) |
| 734319 | | 1354176 | FORD | Focus (2004>) |
| 734320 | | 1374177 | FORD | Focus C-Max (2007>) |
| | | Z60315200 | MAZDA | 3 (2003>2006) |
| | | 8603621 | VOLVO | C30 |
| 734321 | | 1357325 | FORD | Focus (2004>) |
| | | Y60115200E | MAZDA | 3 (2003>2006) |
| | | 8603811 | VOLVO | C30 |
| 734322 | | 1300209 | OPEL | Astra G (98>) |
| | | 9192586 | VAUXHALL | Astra IV (98>) |
| 734326 | | 17101475552 | MINI | MINI (2001>) |
| 734327 | | 17107509714 | MINI | MINI (2001>) |
| 734328 | | 17101475554 | MINI | MINI (2001>) |
| 734329 | | 17117788753 | MINI | MINI (2001>) |
| 734330 | | 9210556 | VAUXHALL | Agila (2000>2007) |
| 734331 | | 4707764 | OPEL | Agila (2000>2007) |
| | | 13182786 | VAUXHALL | Agila (2000>2007) |
| 734332 | | 1K0121251P | AUDI | A3 (2003>2008) |
| | | 1K0121251P | SEAT | Altea |
| | | 1K0121251P | SKODA | Octavia (2004>) |
| | | 1K0121251P | VOLKSWAGEN | Eos |
| 734333 | | 1K0121251N | AUDI | A3 (2003>2008) |
| | | 1K0121251N | SEAT | Altea |
| | | 1K0121251N | SKODA | Octavia (2004>) |
| 734335 | | 1K0121251F | AUDI | A3 (2003>2008) |
| | | 1K0121251E | SEAT | Altea |
| | | 1K0121251F | SKODA | Octavia (2004>) |
| | | 1K0121251F | VOLKSWAGEN | Eos |
| 734336 | | 1331LK | CITROEN | C5 (2001>2004) |
| | | 1331LK | PEUGEOT | 607 (2000>2004) |
| 734338 | | 1330P9 | CITROEN | C3 (2005>) |
| | | 1330P9 | PEUGEOT | 207 |
| 734339 | | 51770416 | FIAT | Croma II (2005>2007) |
| | | 1300273 | OPEL | Signum |



• **New** Nouveau **Nuevo** Novo **Nuovo** Nieuw **Neu** Nowość **Yeni** Новый N□ **Novy**

| Valeo | | OE | | |
|---|---|---|---|---|
| 734339... | | 24418345 | SAAB | 9-3 (2002>) |
| | | 24418345 | VAUXHALL | Signum (2003>2005) |
| 734345 | | 51770420 | FIAT | Croma II (2005>2007) |
| | | 1300412 | OPEL | Signum B (2005>) |
| | | 13156387 | SAAB | 9-3 (2002>) |
| | | 13156387 | VAUXHALL | Signum (2003>2005) |
| 734346 | | 1330N5 | CITROEN | C4 |
| | | 1330N5 | PEUGEOT | 307 (2005>) |
| 734353 | | 6302020 | OPEL | Frontera (91>98) |
| | | 91153279 | VAUXHALL | Frontera (91>98) |
| 734354 | | PCC107681 | MG | MG ZR |
| | | PCC001660 | ROVER | 25 (2004>) |
| 734361 | | 51708005 | FIAT | Idea (2003>2007) |
| | | 51708005 | LANCIA | Musa (2004>2006) |
| 734362 | | 51706942 | FIAT | Idea (2003>2007) |
| | | 51706942 | LANCIA | Musa (2004>2006) |
| 734363 | | 51706057 | FIAT | Idea (2003>2007) |
| | | 51706057 | LANCIA | Y Ipsilon (2003>) |
| 734364 | | 46834067 | FIAT | Idea (2003>2007) |
| | | 46834067 | LANCIA | Musa (2004>2006) |
| 734366 | | 1330J9 | CITROEN | C5 (2004>2007) |
| | | 1330J9 | PEUGEOT | 407 |
| 734378 | | 1695000003 | MERCEDES | A Class (169) (2004>2008) |
| 734379 | | 1695000403 | MERCEDES | A Class (169) (2004>2008) |
| 734380 | | 1300269 | OPEL | Astra H (2004>) |
| | | 13143570 | VAUXHALL | Astra (2004>) |
| 734381 | | 1300265 | OPEL | Astra H (2004>) |
| | | 13145210 | VAUXHALL | Astra (2004>) |
| 734382 | | 1300266 | OPEL | Astra H (2004>) |
| | | 13145211 | VAUXHALL | Astra (2004>) |
| 734383 | | 1300268 | OPEL | Astra H (2004>) |
| | | 13143554 | VAUXHALL | Astra (2004>) |
| 734384 | | 1300252 | OPEL | Meriva |
| | | 13128930 | VAUXHALL | Meriva |
| 734385 | | 1300254 | OPEL | Meriva |
| 734386 | | 1300260 | OPEL | Meriva |
| | | 13148295 | VAUXHALL | Meriva |
| 734388 | | 1300210 | OPEL | Astra G (98>) |
| | | 9192607 | VAUXHALL | Zafira (2003>) |
| 734389 | | 52463053 | VAUXHALL | Omega |
| 734392 | | 1231795 | FORD | StreetKa |
| 734394 | | 17112247345 | BMW | 5 series E39 |
| 734395 | | 17112248478 | BMW | 5 series E60 |
| 734396 | | 17117507972 | BMW | 5 series E60 |
| 734397 | | 1640027060 | TOYOTA | RAV4 (2000>) |
| 734398 | | 1330P8 | CITROEN | C2 |
| | | 1330P8 | PEUGEOT | 1007 |
| 734401 | | 164000D080 | TOYOTA | Avensis (2000>2003) |
| 734405 | | 45111FC320 | SUBARU | Forester (97>2001) |

| Valeo | | OE | | |
|---|---|---|---|---|
| 734406 | | 1770086CA0 | SUZUKI | Vitara |
| 734408 | | 253104A100 | HYUNDAI | Plaza |
| 734410 | | RF5C15200 | MAZDA | 6 (2002>2005) |
| 734411 | | 1330H9 | PEUGEOT | 406 (95>99) |
| 734412 | | 51749911 | FIAT | Croma II (2005>2007) |
| 734415 | | 353121253AL | VOLKSWAGEN | Passat (88>93) |
| 734418 | | 8E0121251G | AUDI | A4 (2000>2004) |
| 734419 | | 8E0121251C | AUDI | A4 (2000>2004) |
| 734420 | | 2215000103 | MERCEDES | S Class (221) |
| 734421 | | 17112244543 | BMW | 5 series E34 |
| 734423 | | 1330K2 | PEUGEOT | 407 |
| 734424 | | MR258668 | MITSUBISHI | Pajero Sport (98>) |
| 734428 | | 7404754 | FORD | Scorpio (94>98) |
| 734429 | | 1300148 | OPEL | Astra F (91>98) |
| 734432 | | 1300267 | OPEL | Astra H (2004>) |
| | | 13145212 | VAUXHALL | Astra (2004>) |
| 734436 | | 21410BC510 | NISSAN | Micra (2005>) |
| 734437 | | 21410BC500 | NISSAN | Micra (2005>) |
| | | 21410BC500 | NISSAN | Note (2005>2007) |
| 734438 | | 8200325007 | RENAULT | Mégane II |
| 734445 | | 133076 | PEUGEOT | 306 (97>) |
| 734446 | | 214107C002 | NISSAN | Serena (C23M) |
| 734447 | | 2215000003 | MERCEDES | S Class (221) |
| 734448 | | 504084141 | IVECO | Daily (2006>) |
| 734449 | | 504045487 | IVECO | Daily (99>) |
| 734452 | | 1330K8 | CITROEN | C5 (2004>2007) |
| | | 1330K8 | PEUGEOT | 407 |
| 734454 | | 96150272 | CITROEN | ZX |
| 734455 | | 133036 | CITROEN | Xantia (97>2002) |
| 734456 | | 1330E2 | CITROEN | Berlingo (96>2002) |
| | | 1330E2 | PEUGEOT | 306 (97>) |
| 734457 | | 51724183 | FIAT | Punto II (2003>) |
| 734458 | | 51723827 | FIAT | Punto II (2003>) |
| 734459 | | 51714679 | FIAT | Punto II (99>2003) |
| 734461 | | 8200489879 | RENAULT | Clio III (2005>) |
| 734462 | | 8200468913 | RENAULT | Clio III (2005>) |
| 734463 | | 1330J8 | CITROEN | C5 (2004>2007) |
| | | 1330J8 | PEUGEOT | 407 |
| 734464 | | 1300261 | OPEL | Corsa C (2003>) |
| | | 93177593 | VAUXHALL | Corsa II (2003>) |
| 734465 | | 45111FE051 | SUBARU | Impreza (93>2005) |
| 734466 | | 164007A122 | TOYOTA | RAV4 (94>2000) |
| 734468 | | 4135737 | FORD | Maverick (2000>) |
| | | AJ0315200 | MAZDA | Tribute |
| 734473 | | 21460BM702 | NISSAN | Almera (2000>2003) |
| 734476 | | 19010PNLG01 | HONDA | CR-V (2002>2006) |
| 734477 | | 19010PNLG51 | HONDA | CR-V (2002>2006) |
| 734478 | | 19010PNAG51 | HONDA | Stream |
| 734480 | | MB925638 | MITSUBISHI | Carisma (95>99) |

| Valeo | | OE | | |
|---|---|---|---|---|
| 734481 | | MR212449 | **MITSUBISHI** | Galant V (96>2003) |
| 734483 | | LF2115200 | **MAZDA** | 6 (2002>2005) |
| 734484 | | L32715200 | **MAZDA** | 6 (2002>2005) |
| 734486 | | 1770075F10 | **SUZUKI** | Wagon R |
| 734488 | | 164007A290 | **TOYOTA** | Camry (96>2001) |
| 734489 | | 164007A300 | **TOYOTA** | Camry (96>2001) |
| 734490 | | 164000D100 | **TOYOTA** | Avensis (2000>2003) |
| 734491 | | 164000H010 | **TOYOTA** | Avensis (2000>2003) |
| 734492 | | 1640020271 | **TOYOTA** | Camry (2001>2006) |
| 734493 | | 1640028190 | **TOYOTA** | RAV4 (2000>) |
| 734498 | | 1640070630 | **LEXUS** | IS I (99>2005) |
| 734499 | | 1640070620 | **LEXUS** | IS I (99>2005) |
| 734515 | | J1640058500 | **VOLKSWAGEN** | Taro |
| 734577 | | 45199FC361 | **SUBARU** | Forester (97>2001) |
| 734581 | | F2H215200 | **MAZDA** | 626 (GD) (87>92) |
| 734596 | | 96144850 | **DAEWOO** | Nexia |
| 734604 | | 1300146 | **OPEL** | Calibra |
| | | 90443911 | **VAUXHALL** | Calibra |
| 734606 | | 535121251C | **VOLKSWAGEN** | Corrado |
| 734615 | | 17111723689 | **BMW** | 5 series E34 |
| 734623 | | 19010PW0014 | **HONDA** | Civic III (87>91) |
| 734624 | | 19010P14A02 | **HONDA** | Prelude IV (91>96) |
| 734631 | | 1405002103 | **MERCEDES** | S Class (140) |
| 734662 | | 1770056B00 | **SANTANA** | Vitara |
| 734668 | | 6385012801 | **MERCEDES** | Vito (96>2003) |
| 734669 | | 6385013001 | **MERCEDES** | V Class (638/2) |
| 734671 | | 214109C002 | **NISSAN** | Serena (C23M) |
| 734674 | | 6385011601 | **MERCEDES** | Vito (96>2003) |
| 734689 | | 9015003600 | **MERCEDES** | Sprinter (95>) |
| 734692 | | 46807378 | **FIAT** | Doblo (2000>2003) |
| 734695 | | 4D0121251 | **AUDI** | A8 (94>2002) |
| 734696 | | 1320515 | **FORD** | Mondeo (2000>) |
| 734699 | | 1315633 | **FORD** | Mondeo (2000>) |
| 734702 | | 19010PMAE61 | **HONDA** | Civic (EP) (2001>) |
| 734703 | | 19010RBAE01 | **HONDA** | Accord VIII (2003>2008) |
| 734706 | | 21460AV600 | **NISSAN** | Primera (P12) (2001>) |
| 734708 | | 21410BN301 | **NISSAN** | Almera (2000>2003) |
| 734711 | | 164000D210 | **TOYOTA** | Avensis (2003>) |
| 734712 | | 164000H110 | **TOYOTA** | Avensis (2003>) |
| 734714 | | 5193370 | **SAAB** | 9-5 (2001>2004) |
| 734716 | | 19010PDAE01 | **HONDA** | Accord VII (98>2003) |
| 734717 | | 19010PDAE51 | **HONDA** | Accord VII (98>2003) |
| 734723 | | 19010PLCJ51 | **HONDA** | Civic (EP) (2001>) |
| 734728 | | 8200033729 | **RENAULT** | Espace IV (2002>2006) |
| 734729 | | 21410BU001 | **NISSAN** | Almera Tino (2000>2003) |
| 734733 | | 46842843 | **ALFA ROMEO** | 147 (2000>2004) |
| 734734 | | ESR204 | **LAND ROVER** | Land 110 Series I - II - III |
| 734736 | | 21410BM400 | **NISSAN** | Almera (2000>2003) |
| 734737 | | 21410BN700 | **NISSAN** | Almera (2000>2003) |

| Valeo | | OE | | |
|---|---|---|---|---|
| 734738 | | 447121251H | **AUDI** | 100 (82>90) |
| 734739 | | 7L6121253C | **VOLKSWAGEN** | Touareg (2002>2006) |
| 734740 | | 7L6121253A | **VOLKSWAGEN** | Touareg (2002>2006) |
| 734741 | | 7L0121253A | **AUDI** | Q7 |
| | | 95510614200 | **PORSCHE** | Cayenne |
| | | 7L0121253A | **VOLKSWAGEN** | Touareg (2002>2006) |
| 734747 | | 19010P1EE51 | **HONDA** | Shuttle |
| 734749 | | 6385012701 | **MERCEDES** | Vito (96>2003) |
| 734751 | | 4A0121251Q | **AUDI** | 100 (90>94) |
| 734752 | | 4B0121251 | **AUDI** | A6 (2001>2004) |
| 734753 | | 4B0121251AK | **AUDI** | A6 (2001>2004) |
| 734754 | | 4D0121251J | **AUDI** | A8 (94>2002) |
| 734760 | | 133032 | **CITROEN** | XM (94>2001) |
| 734761 | | 96182648 | **DAEWOO** | Espero |
| 734762 | | 96271477 | **DAEWOO** | Rezzo |
| 734764 | | 96351103 | **DAEWOO** | Leganza |
| 734765 | | 96351931 | **DAEWOO** | Nubira (97>99) |
| 734766 | | 96109532 | **DAEWOO** | Aranos |
| 734767 | | 96273596 | **DAEWOO** | Leganza |
| 734772 | | 1025533 | **FORD** | Ka (96>2008) |
| 734785 | | C2S1231 | **JAGUAR** | X-Type (2001>2008) |
| 734788 | | 0K01215200 | **KIA** | Retona |
| 734793 | | 1405000403 | **MERCEDES** | S Class (140) |
| 734798 | | 1295001003 | **MERCEDES** | SL (129) |
| 734801 | | 2205000003 | **MERCEDES** | S Class (220) |
| 734803 | | 2105005803 | **MERCEDES** | E Class (210) |
| 734805 | | 2115001302 | **MERCEDES** | CLS (2004>2010) |
| 734806 | | 6385012201 | **MERCEDES** | Vito (96>2003) |
| 734807 | | 6385012401 | **MERCEDES** | V Class (638/2) |
| 734809 | | MB538806 | **MITSUBISHI** | Pajero I (82>91) |
| 734819 | | 21400G9802 | **NISSAN** | Patrol 260 (84>) |
| 734826 | | 99610613151 | **PORSCHE** | Boxster (96>2002) |
| 734827 | | 99610613251 | **PORSCHE** | Boxster (96>2002) |
| 734828 | | 6025312321 | **RENAULT** | Avantime |
| 734829 | | PCC000960 | **MG** | MG XPower |
| | | PCC000960 | **ROVER** | 75 (2004>) |
| 734830 | | 5193388 | **SAAB** | 9-5 (2001>2004) |
| 734831 | | 4575734 | **SAAB** | 9-5 (2001>2004) |
| 734835 | | 1770062G01 | **SUZUKI** | Baleno |
| 734839 | | 1640016301 | **TOYOTA** | Celica (ST18) (89>93) |
| 734840 | | 1640021060 | **TOYOTA** | Yaris (NCP/SCP) JPP |
| 734841 | | 1640021070 | **TOYOTA** | Yaris (NCP/SCP) JPP |
| 734842 | | 1640033070 | **TOYOTA** | Yaris (NCP/SCP) JPP |
| 734845 | | 164000B030 | **TOYOTA** | Avensis (97>2000) |
| 734848 | | 0003428V006000000 | **MCC** | Crossblade |
| 734850 | | 164006A180 | **TOYOTA** | Picnic (96>2001) |
| 734853 | | 191121253N | **VOLKSWAGEN** | Golf I Cabriolet (79>93) |
| 734855 | | 8601449 | **VOLVO** | C70 |
| 734856 | | 8602558 | **VOLVO** | S60 |



• **New** Nouveau **Nuevo** Novo **Nuovo** Nieuw **Neu** Nowość **Yeni** Новый N□ **Novy**

| Valeo | | OE | | |
|---|---|---|---|---|
| 734859 | | 4B3121251D | AUDI | A6 (2001>2004) |
| 734862 | | 1030491 | FORD | Transit (95>99) |
| 734894 | | 17101439101 | BMW | X5 |
| 734895 | | 17107544668 | BMW | X5 |
| 734896 | | 17107544669 | BMW | X5 |
| 734897 | | 17117519209 | BMW | 5 series E60 |
| 734898 | | 17117519212 | BMW | 5 series E60 |
| 734903 | | 253102D100 | HYUNDAI | Coupe (2002>) |
| 734905 | | 2531026410 | HYUNDAI | Santa Fé |
| 734909 | | 2531026070 | HYUNDAI | Santa Fé |
| 734916 | | 164000N011 | TOYOTA | Yaris |
| 734917 | | 1770075F00 | SUZUKI | Wagon R |
| 734918 | | 1770084CB0 | SUZUKI | Samurai |
| 734919 | | 1770086CB0 | SUZUKI | Vitara |
| 734921 | | 1330Q0 | CITROEN | C2 |
| | | 1330Q0 | PEUGEOT | 1007 |
| 734922 | | 8200384071 | RENAULT | Kangoo (2003>) |
| 734923 | | 51773189 | FIAT | Panda (2003>) |
| 734924 | | 51773192 | FIAT | Panda (2003>) |
| 734926 | | 9065000002 | MERCEDES | Sprinter II (2006>) |
| 734927 | | 2E0121253B | VOLKSWAGEN | Crafter |
| 734928 | | 9065000202 | MERCEDES | Sprinter II (2006>) |
| 734929 | | 9065000402 | MERCEDES | Sprinter II (2006>) |
| 734930 | | 2E0121253 | VOLKSWAGEN | Crafter |
| 734931 | | 93857125 | VAUXHALL | Vivaro (2006>) |
| 734932 | | 51773195 | FIAT | Panda (2003>) |
| 734938 | | 2115003502 | MERCEDES | CLS (2004>2010) |
| 734941 | | 2035002003 | MERCEDES | C Class (203) (2004>) |
| 734945 | | 2215000203 | MERCEDES | S Class (221) |
| 734946 | | 4416948 | OPEL | Vivaro (2006>) |
| | | 8200411166 | RENAULT | Trafic II (2006>) |
| | | 93854164 | VAUXHALL | Vivaro (2006>) |
| 734949 | | 2531038050 | HYUNDAI | Sonata (98>2001) |
| | | 2531038050 | KIA | Magentis (2001>2005) |
| 734950 | | 2531029010 | HYUNDAI | Coupe (95>2001) |
| 734953 | | 0K72A15200 | KIA | Pregio |
| 734960 | | 2531025152 | HYUNDAI | Accent (2003>2004) |
| 734965 | | 253102D110 | HYUNDAI | Coupe (2002>) |
| 734981 | | 51773281 | FIAT | Croma II (2005>2007) |
| | | 1300284 | OPEL | Signum B (2005>) |
| 734982 | | 1300283 | OPEL | Vectra C (2002>2005) |
| 734990 | | 0K62Z15200C | KIA | Bongo |
| 735021 | | 71740292 | ALFA ROMEO | 159 |
| 735033 | | 4E0121251C | AUDI | A8 (2002>2007) |
| 735034 | | 17117792832 | BMW | 5 series E60 |
| 735036 | | 17117794836 | BMW | 5 series E60 |
| 735040 | | 55700448 | FIAT | Grande Punto |
| | | 1300415 | OPEL | Corsa D (2006>) |
| | | 55703926 | VAUXHALL | Corsa IV (2006>) |

| Valeo | | OE | | |
|---|---|---|---|---|
| 735041 | | 55703927 | FIAT | Bravo II (2007>) |
| | | 1300287 | OPEL | Corsa D (2006>) |
| | | 55703927 | VAUXHALL | Corsa IV (2006>) |
| 735042 | | 55700447 | FIAT | Grande Punto |
| 735043 | | 4367089 | FORD | Tourneo Connect (2002>2006) |
| 735045 | | 1363013 | FORD | Fiesta (2002>2005) |
| 735046 | | 1093458 | FORD | Focus (2001>2003) |
| 735048 | | 1350152 | FORD | Mondeo (2005>) |
| 735049 | | 19010RBBE51 | HONDA | Accord VIII (2003>2008) |
| 735050 | | 19010RBA901 | HONDA | Accord VIII (2003>2008) |
| 735051 | | 52079883AB | JEEP | Grand Cherokee (2003>2005) |
| 735053 | | LF1715200 | MAZDA | 6 (2002>2005) |
| 735054 | | 0010033V003000000 | MCC | Roadster |
| 735055 | | 4545001503 | MCC | Forfour |
| | | MN130393 | MITSUBISHI | Colt VI (2004>) |
| 735056 | | 4545001103 | MCC | Forfour |
| | | MN130395 | MITSUBISHI | Colt VI (2004>) |
| 735057 | | MN135879 | MITSUBISHI | Colt VI (2004>) |
| 735058 | | MR968289 | MITSUBISHI | Pajero III (2000>) |
| 735059 | | MB890951 | MITSUBISHI | Pajero II (91>99) |
| 735060 | | MR188432 | MITSUBISHI | Pajero II (91>99) |
| 735061 | | 21410BV010 | NISSAN | Primera (P12) (2001>) |
| 735062 | | 214108H801 | NISSAN | X-Trail (2001>2003) |
| 735063 | | 214108H900 | NISSAN | X-Trail (2001>2003) |
| 735064 | | 214608H900 | NISSAN | X-Trail (2001>2003) |
| 735065 | | 1300165 | OPEL | Omega B (94>) |
| | | 52464745 | VAUXHALL | Omega |
| 735068 | | 1330K3 | CITROEN | C5 (2001>2004) |
| | | 1330K3 | PEUGEOT | 607 (2000>2004) |
| 735069 | | 1330P5 | CITROEN | C1 |
| | | 1330P5 | PEUGEOT | 107 |
| | | 164000Q020 | TOYOTA | Aygo |
| 735070 | | 1330P3 | CITROEN | C1 |
| | | 1330P3 | PEUGEOT | 107 |
| | | 16400YV010 | TOYOTA | Aygo |
| 735072 | | 1330P4 | CITROEN | C1 |
| | | 1330P4 | PEUGEOT | 107 |
| | | 164000Q010 | TOYOTA | Aygo |
| 735073 | | 1770084CA0 | SUZUKI | Samurai |
| 735074 | | 1770086CC2 | SUZUKI | Vitara |
| 735075 | | 164000G010 | TOYOTA | Avensis (2000>2003) |
| 735076 | | KK37015200A | KIA | Avella |
| 735077 | | 0K30A15200E | KIA | Rio (2000>2005) |
| 735078 | | 0K31A15200A | KIA | Rio (2000>2005) |
| 735079 | | KK15015200A | KIA | Pride |
| 735080 | | 1300271 | OPEL | Astra H (2004>) |
| | | 13152320 | VAUXHALL | Astra (2004>) |
| 735081 | | 214108H800 | NISSAN | X-Trail (2001>2003) |
| 735083 | | 1300277 | OPEL | Vectra C (2005>) |

| Valeo | | OE | | |
|---|---|---|---|---|
| 735083... | | 12805057 | SAAB | 9-3 (2002>) |
| | | 12805057 | VAUXHALL | Vectra (2005>) |
| 735084 | | 2E0121253A | VOLKSWAGEN | Crafter |
| 735085 | | 51775637 | FIAT | Croma II (2005>2007) |
| | | 13196477 | VAUXHALL | Vectra (2005>) |
| 735086 | | 13200486 | SAAB | 9-3 (2002>) |
| 735088 | | 9065000102 | MERCEDES | Sprinter II (2006>) |
| 735089 | | 9065000302 | MERCEDES | Sprinter II (2006>) |
| 735090 | | 1330V5 | CITROEN | C4 (2004>2010) |
| | | 1330V5 | PEUGEOT | Partner (B9) (2008>) |
| 735091 | | 1330S8 | PEUGEOT | 307 (2005>) |
| 735093 | | 8E0121251P | AUDI | A4 (2000>2004) |
| 735097 | | 1300279 | OPEL | Corsa D (2006>) |
| | | 55701408 | VAUXHALL | Corsa IV (2006>) |
| 735112 | | 7701066109 | RENAULT | Master (2006>) |
| 735114 | | 21400JD50A | NISSAN | Qashqai |
| 735115 | | 21400JD70A | NISSAN | Qashqai |
| 735116 | | 21400JD900 | NISSAN | Qashqai |
| 735118 | | 21400JD200 | NISSAN | Qashqai |
| 735119 | | 21400JD000 | NISSAN | Qashqai |
| 735120 | | 1K0121251AR | AUDI | A3 (2003>2008) |
| | | 1K0121251AR | SEAT | Altea |
| | | 1K0121251BL | SKODA | Octavia (2004>) |
| | | 1K0121251BL | VOLKSWAGEN | Eos |
| 735121 | | 1K0121253AC | VOLKSWAGEN | Passat (2005>) |
| 735125 | | 1330S4 | PEUGEOT | 207 |
| 735129 | | 12775540 | SAAB | 9-3 (2002>) |
| 735130 | | 12775541 | SAAB | 9-3 (2002>) |
| 735131 | | 12805055 | SAAB | 9-3 (2002>) |
| 735133 | | 5N0121253H | VOLKSWAGEN | Fox |
| 735134 | | 8200448552 | RENAULT | Twingo III (2007>) |
| 735135 | | 8200448553 | RENAULT | Twingo III (2007>) |
| 735138 | | 2045000203 | MERCEDES | C Class (204) (2007>) |
| 735139 | | 2045000303 | MERCEDES | C Class (204) (2007>) |
| 735144 | | 2035004503 | MERCEDES | CLC Class (203) |
| 735156 | | 8200443896 | RENAULT | Clio III (2005>) |
| 735157 | | 96536523 | DAEWOO | Kalos |
| 735158 | | 96536669 | DAEWOO | Kalos |
| 735159 | | 96553378 | DAEWOO | Lacetti |
| 735165 | | 17117788903 | BMW | 1 series E81 |
| 735166 | | 17117521046 | BMW | 1 series E87 |
| 735167 | | 1365996 | FORD | Tourneo Connect (2002>2006) |
| 735171 | | 46803039 | FIAT | Doblo (2000>2003) |
| 735172 | | 46803031 | FIAT | Doblo (2000>2003) |
| 735175 | | 51779915 | FIAT | Panda (2003>) |
| 735179 | | 1K0121251BN | SKODA | Superb II (2008>) |
| | | 1K0121251BN | VOLKSWAGEN | Eos |
| 735180 | | 214100057R | RENAULT | Mégane III (2009>) |
| 735181 | | 214100017R | RENAULT | Scenic III |

| Valeo | | OE | | |
|---|---|---|---|---|
| 735182 | | 214100016R | RENAULT | Mégane III (2009>) |
| 735184 | | 214100014R | RENAULT | Mégane III (2009>) |
| 735186 | | 1K0121251CN | VOLKSWAGEN | Golf Plus (2005>) |
| 735188 | | 164000R061 | TOYOTA | Avensis (2009>) |
| | | 164000R061 | TOYOTA | Avensis (2009>) |
| 735194 | | 17117562079 | BMW | 1 series E81 |
| 735195 | | 17117553111 | BMW | 1 series E87 |
| 735196 | | 55037654AB | JEEP | Wrangler (96>2006) |
| 735198 | | MR968857 | MITSUBISHI | Lancer (CS) (2003>) |
| 735200 | | 1330V1 | CITROEN | C Crosser |
| | | 1350A050 | MITSUBISHI | Lancer Evolution |
| | | 1330V1 | PEUGEOT | 4007 |
| 735201 | | MR993742 | MITSUBISHI | Outlander |
| 735202 | | MN156319 | MITSUBISHI | Outlander |
| 735203 | | MN156535 | MITSUBISHI | Outlander |
| 735204 | | 21460CA010 | NISSAN | Murano |
| 735205 | | 21400JG300 | NISSAN | X-Trail (2007>) |
| 735206 | | 21400JG80A | NISSAN | X-Trail (2007>) |
| 735208 | | 45199FC330 | SUBARU | Forester (97>2001) |
| 735209 | | 45111SA031 | SUBARU | Forester FL (2005>) |
| 735210 | | 45111SA011 | SUBARU | Forester (SG) (2002>) |
| 735211 | | 45111FE081 | SUBARU | Impreza (2005>2007) |
| 735212 | | 45119AG020 | SUBARU | Legacy (2003>) |
| 735213 | | 164000N060 | TOYOTA | Auris |
| 735214 | | 1640028280 | TOYOTA | Camry (2001>2006) |
| 735215 | | 1640028560 | TOYOTA | RAV 4 (2006>) |
| 735216 | | 1640026390 | TOYOTA | RAV 4 (2006>) |
| 735221 | | 52079729AC | JEEP | Cherokee (2004>) |
| 735222 | | 52080123AA | JEEP | Cherokee (2001>2004) |
| 735223 | | 17111436063 | BMW | 5 series E39 |
| 735229 | | 6302002 | OPEL | Frontera (91>98) |
| | | 91146915 | VAUXHALL | Frontera (91>98) |
| 735230 | | 2205002003 | MERCEDES | S Class (220) |
| 735231 | | 2105006503 | MERCEDES | E Class (210) |
| 735233 | | 17111436063 | BMW | 5 series E39 |
| 735234 | | 2205000903 | MERCEDES | S Class (220) |
| 735236 | | BPM715200 | MAZDA | 323 (BA) (94>96) |
| 735237 | | 8602753 | VOLVO | S60 |
| 735238 | | 19010RNAA01 | HONDA | Civic (FK/FD) (2006>) |
| 735240 | | FS8M15200A | MAZDA | 323 (BJ) (2000>2003) |
| 735241 | | 19010RSHE01 | HONDA | Civic (FK/FD) (2006>) |
| 735242 | | 19010RSRE01 | HONDA | Civic (FK/FD) (2006>) |
| 735243 | | 19010RSAG01 | HONDA | Civic (FK/FD) (2006>) |
| 735250 | | 1640022160 | TOYOTA | Auris |
| 735256 | | 60690406 | ALFA ROMEO | 156 (2003>) |
| 735257 | | 16400B2070000 | DAIHATSU | Cuore (04/2003>2005) |
| 735259 | | 16400B1010000 | DAIHATSU | Sirion II |
| 735266 | | 96271475 | DAEWOO | Rezzo |
| 735278 | | 17117612954 | BMW | 5 series F10/F11 |



• **New** Nouveau **Nuevo** Novo **Nuovo** Nieuw **Neu** Nowość **Yeni** Новый N **Novy**

| Valeo | | OE | | |
|---|---|---|---|---|
| 735279 | | 8200880550 | DACIA | Duster (2010>) |
| 735280 | | 1K0121251CL | SKODA | Yeti (2009>) |
| | | 1K0121251CL | VOLKSWAGEN | Touran (2010>) |
| 735285 | | 2045002203 | MERCEDES | C Class (204) (2007>) |
| 735287 | | 2045002803 | MERCEDES | C Class (204) (2007>) |
| 735292 | | 2045003603 | MERCEDES | E Class (212) (2009>) |
| 735296 | | 46826678 | FIAT | Albea |
| 735297 | | 51718122 | FIAT | Albea |
| 735298 | | 2215003103 | MERCEDES | S Class (221) |
| 735299 | | 2215003203 | MERCEDES | S Class (221) |
| 735310 | | 6R0145805H | VOLKSWAGEN | Polo (06/2009>) |
| 735350 | | 214102S810 | NISSAN | D22 Pick-up |
| 735351 | | 52080118AA | JEEP | Cherokee (2001>2004) |
| 735371 | | 1330X2 | CITROEN | C5 (2008>) |
| | | 1330X2 | PEUGEOT | 508 |
| 735372 | | 1209590 | FORD | Galaxy (2000>2006) |
| 735373 | | 1493773 | FORD | C-Max (2010>) |
| 735374 | | 1493774 | FORD | C-Max (2010>) |
| 735375 | | 1K0121251EC | VOLKSWAGEN | Tiguan |
| 735376 | | 1493771 | FORD | Galaxy CA1 (2006>) |
| 735378 | | 1671390 | FORD | Fiesta (2008>) |
| 735379 | | 1671561 | FORD | Fiesta (2008>) |
| 735381 | | 21410JD50C | NISSAN | Qashqai |
| 735382 | | 2115003402 | MERCEDES | CLS (2004>2010) |
| 735383 | | 4709362 | OPEL | Agila (2007>) |
| 735400 | | 1770079J50 | SUZUKI | SX4 (MAGYAR) (2009>) |
| 735404 | | 45111SA081 | SUBARU | Forester (SG) (2002>) |
| 735405 | | 1770077E10 | SUZUKI | Vitara |
| 735407 | | 1770079J00 | SUZUKI | SX4 (2006>) |
| 735415 | | 164000D030 | TOYOTA | Corolla (110) (97>99) |
| 735416 | | ZJ3815200A | MAZDA | 2 (2007>) |
| 735420 | | MR571147 | MITSUBISHI | L200 (K6/7) |
| 735428 | | MR281023 | MITSUBISHI | L200 (K6/7) |
| 735433 | | 1770066J00 | SUZUKI | Grand Vitara (2006>) |
| 735437 | | MR281024 | MITSUBISHI | L200 (K6/7) |
| 735441 | | 1350A182 | MITSUBISHI | L 200 II (K84T) (2006>) |
| 735442 | | 164000L250 | TOYOTA | Hilux |
| 735445 | | 164000Q040 | TOYOTA | Yaris (KSP) JPP (2005>) |
| 735449 | | 1604121280 | TOYOTA | Prius II |
| 735451 | | 17117600511 | BMW | 1 series F20 |
| 735453 | | 17117600516 | BMW | 1 series F20 |
| 735454 | | 17117600520 | BMW | 1 series F20 |
| 735455 | | 17117618807 | BMW | 1 series F20 |
| 735469 | | 1S0121253P | VOLKSWAGEN | UP 1.0 Sre 60 |
| 735471 | | 8K0121251R | AUDI | A4 (2007>) |
| 735472 | | 8K0121251T | AUDI | A4 (2007>) |
| 735473 | | 8K0121251AA | AUDI | A4 (2007>) |
| 735474 | | 8K0121251H | AUDI | A4 (2007>) |
| 735475 | | 17117795878 | BMW | 5 series E60 |

| Valeo | | OE | | |
|---|---|---|---|---|
| 735476 | | 17117534914 | BMW | 1 series E87 |
| 735477 | | 17117534915 | BMW | 5 series E60 |
| 735478 | | 1221061 | FORD | StreetKa |
| 735479 | | 2035000100 | MERCEDES | C Class (203) (2000>2003) |
| 735480 | | 17117535099 | MINI | MINI 2 LCI (R56/R57) (2009>) |
| 735481 | | 17112751275 | MINI | MINI 2 LCI (R56/R57) (2009>) |
| 735482 | | 1300291 | OPEL | Insignia |
| 735483 | | 1300293 | OPEL | Insignia |
| | | 13241728 | VAUXHALL | Insignia |
| 735484 | | 1300294 | OPEL | Insignia |
| | | 13241729 | VAUXHALL | Insignia |
| 735485 | | 1300292 | OPEL | Insignia |
| | | 13241726 | VAUXHALL | Insignia |
| 735486 | | 1300290 | OPEL | Insignia |
| | | 13241724 | VAUXHALL | Insignia |
| 735487 | | 1300288 | OPEL | Insignia |
| | | 13241722 | VAUXHALL | Insignia |
| 735488 | | 1300289 | OPEL | Insignia |
| | | 13241723 | VAUXHALL | Insignia |
| 735489 | | 8200292771 | RENAULT | Espace IV Phase 2 (2006>) |
| 735490 | | 36002407 | VOLVO | S40 (2004>) |
| 735562 | | 2531005500 | HYUNDAI | Atos |
| 735563 | | 253102E100 | KIA | Sportage (2007>2010) |
| 735564 | | 253102H000 | HYUNDAI | i30 |
| 735565 | | 1640030170 | TOYOTA | Hiace |
| 735567 | | 164006A290 | TOYOTA | Corolla (120) (2001>) |
| 735568 | | 1640030140 | TOYOTA | Land Cruiser (2002>) |
| 735569 | | 1640031351 | TOYOTA | Land Cruiser (2002>) |
| 735571 | | 1604120352 | LEXUS | RX 400 |
| 735572 | | 164000R011 | TOYOTA | Corolla Verso (2004>2009) |
| 735573 | | 164000R010 | TOYOTA | Corolla Verso (2004>2009) |
| 735574 | | 164000N031 | TOYOTA | Corolla (120) (2001>) |
| 735575 | | 1350A297 | MITSUBISHI | Lancer (2007>) |
| 735576 | | MN171217 | MITSUBISHI | Grandis |
| 735577 | | L33L15200 | MAZDA | 626 (GF) (99>2002) |
| 735578 | | 1770080A10 | SUZUKI | Jimny |
| 735580 | | 1770066J10 | SUZUKI | Grand Vitara (2006>) |
| 735583 | | 1640070100 | TOYOTA | Cressida III (84>88) |
| 735586 | | 253101E001 | HYUNDAI | Accent (2006>) |
| 735589 | | 2531025810 | HYUNDAI | Accent (99>2003) |
| 735593 | | 164005B320 | TOYOTA | Hiace |
| 735597 | | 1330S7 | CITROEN | C4 (2004>2010) |
| | | 1330S7 | PEUGEOT | 307 (2005>) |
| 735598 | | 1330T5 | CITROEN | C4 (2004>2010) |
| | | 1330T5 | PEUGEOT | 307 (2005>) |
| 735600 | | 1377541 | FORD | Galaxy CA1 (2006>) |
| | | LR006715 | LAND ROVER | Range Rover Evoque |
| 735606 | | 2531017100 | HYUNDAI | Matrix |
| 735607 | | 214100002R | RENAULT | Mégane III (2008>) |

| Valeo | | OE | | |
|---|---|---|---|---|
| 735608 | | 1330P9 | CITROEN | DS3 |
| | | 1330J7 | PEUGEOT | 407 |
| 736083 | | 1J0121253G | SEAT | Leon I (99>2006) |
| | | 1J0121253G | SKODA | Octavia (2000>2004) |
| | | 1J0121253G | VOLKSWAGEN | Golf IV (97>2003) |
| 810827 | | 1300K5 | PEUGEOT | 205 |
| 810835 | | 7700736827 | RENAULT | Espace (84>91) |
| 810836 | | 1301E5 | CITROEN | XM (89>94) |
| | | 1301E5 | PEUGEOT | 605 (89>94) |
| 810843 | | 7700657109 | RENAULT | Fuego |
| 810851 | | 7700773700 | RENAULT | R11 |
| 810881 | | 1300B0 | PEUGEOT | 504 |
| 810882 | | 1331E0 | PEUGEOT | 505 |
| 810887 | | 7700773288 | RENAULT | R21 |
| 810888 | | 7700778034 | RENAULT | R21 |
| 810889 | | 7700757853 | RENAULT | R25 |
| 810892 | | | PEUGEOT | 205 |
| 810912 | | 7700784039 | RENAULT | R19 |
| 810915 | | 1300N4 | PEUGEOT | 405 (87>92) |
| 810919 | | 1300N6 | PEUGEOT | 405 (87>92) |
| 810924 | | 46519780 | FIAT | Uno Mondo (98>) |
| 810926 | | 6001009077 | RENAULT | Super 5 |
| 810933 | | 7700704654 | RENAULT | R5 |
| 810938 | | 7700773289 | RENAULT | R21 |
| 810949 | | 7610803 | FIAT | Marengo (159) (89>93) |
| | | 71735353 | LANCIA | Dedra |
| 810955 | | 1300N5 | PEUGEOT | 405 (87>92) |
| 810956 | | 90311622 | VOLVO | 440-460-480 |
| 810957 | | 90311630 | VOLVO | 440-460-480 |
| 810965 | | 7549298 | SAAB | 900 (79>93) |
| 810968 | | 86011244 | VOLVO | 240-260 |
| 810970 | | 86011269 | VOLVO | 240-260 |
| 810971 | | 86011251 | VOLVO | 240-260 |
| 810995 | | 7700803753 | RENAULT | Clio (90>98) |
| 811010 | | 0060504387 | ALFA ROMEO | 33 (83>89) |
| 811046 | | 6138599 | FORD | Escort (80>86) |
| 811047 | | 6138600 | FORD | Escort (80>86) |
| 811056 | | 82429172 | LANCIA | Delta (86>93) |
| 811065 | | 7754062 | FIAT | Panda |
| 811066 | | 60805074 | ALFA ROMEO | 164 (87>98) |
| 811068 | | 0060507820 | ALFA ROMEO | 164 (87>92) |
| 811069 | | 7739073 | FIAT | Tempra |
| 811070 | | 7732873 | FIAT | Tempra |
| | | 7732873 | LANCIA | Dedra |
| 811071 | | 0060806046 | ALFA ROMEO | 155 |
| | | 7775153 | FIAT | Tempra |
| | | 46517134 | LANCIA | Dedra |
| 811073 | | 7766965 | FIAT | Coupe |
| | | 71736501 | LANCIA | Dedra |

| Valeo | | OE | | |
|---|---|---|---|---|
| 811075 | | 60809015 | ALFA ROMEO | 145 |
| 811348 | | 93807662 | IVECO | Daily (78>89) |
| 811380 | | 1300G0 | CITROEN | C25 (81>90) |
| | | 7555802 | FIAT | Ducato (81>94) |
| | | 1300G0 | PEUGEOT | J5 |
| 811381 | | 82416664 | LANCIA | Delta (86>93) |
| 811385 | | 7739941 | FIAT | Uno (83>89) |
| 811387 | | 50005580 | FIAT | Uno (83>89) |
| | | 50005580 | INNOCENTI | Elba |
| 811389 | | 60526047 | ALFA ROMEO | 75 |
| 811392 | | 46551216 | AUTOBIANCHI | Y10 |
| | | 46551216 | FIAT | Panda |
| | | 46551216 | LANCIA | Y10 |
| 811397 | | 7754055 | FIAT | Uno (83>95) |
| 812002 | | 95230684 | CITROEN | AX (86>91) |
| 812005 | | 644878 | CITROEN | Xantia |
| 812006 | | 644880 | CITROEN | Xantia |
| 812012 | | 894819031A | AUDI | 80 (86>91) |
| 812013 | | 701819031A | VOLKSWAGEN | Transporter (90>2003) |
| 812014 | | 7701035891 | RENAULT | Safrane |
| 812015 | | 7701032225 | RENAULT | R25 |
| 812016 | | 96090004 | CITROEN | AX (91>98) |
| 812026 | | 5000739631 | RENAULT TRUCKS | C-Range |
| 812027 | | 9620238 | SAAB | 9000 |
| 812028 | | JEF10005 | ROVER | Mini |
| 812029 | | 867819121A | AUDI | 50 |
| 812030 | | 1H1819031B | AUDI | A3 (96>2003) |
| 812031 | | 1H2819031B | AUDI | A3 (96>2003) |
| 812032 | | 7701034539 | RENAULT | R5 |
| 812034 | | 171819031E | AUDI | 80 (72>81) |
| 812035 | | 5010104235 | RENAULT TRUCKS | R-Major |
| 812036 | | 95495316 | CITROEN | BX |
| 812037 | | 644889 | CITROEN | XM |
| 812039 | | BAU5230 | ROVER | Metro |
| 812044 | | 6448C8 | CITROEN | Xantia |
| 812045 | | 7701034291 | RENAULT | Master (80>97) |
| 812047 | | 93156374 | IVECO TRUCKS | 115 |
| 812048 | | 7701039481 | RENAULT | Laguna (94>98) |
| 812049 | | 5011078AA | CHRYSLER | 300M |
| 812053 | | 6114258 | FORD | Fiesta (83>89) |
| 812057 | | 6775553 | FORD | Fiesta (89>95) |
| 812058 | | 6183117 | FORD | Escort (90>94) |
| 812069 | | JEF10002 | ROVER | 200 (89>95) |
| 812070 | | JEF100060 | ROVER | 600 |
| 812071 | | JEM10002 | ROVER | 100 |
| 812072 | | JLM11343 | JAGUAR | XJ (68>73) |
| 812075 | | 93158460 | IVECO TRUCKS | 190 |
| 812077 | | 1806124 | OPEL | Frontera |
| 812081 | | 5893932 | FIAT | Barchetta (95>2003) |



• **New** Nouveau **Nuevo** Novo **Nuovo** Nieuw **Neu** Nowość **Yeni** Новый N□ **Novy**

| Valeo | | OE | | |
|---|---|---|---|---|
| 812084 | | 0028355401 | MERCEDES | 190 (201) |
| 812093 | | 3200712 | VOLVO | 340-360 |
| 812107 | | 2714098B10 | NISSAN | Micra (K11) (92>2002) |
| 812108 | | 5658030101 | NISSAN | Primera (P10) (90>2001) |
| 812110 | | 1618044 | OPEL | Omega A (86>94) |
| 812112 | | 7701042517 | RENAULT | Laguna (94>98) |
| 812113 | | 7701038542 | RENAULT | Laguna (94>98) |
| 812114 | | 644875 | PEUGEOT | 106 (91>96) |
| 812115 | | 644874 | PEUGEOT | 405 (87>96) |
| 812116 | | 6448A7 | CITROEN | Evasion |
| 812117 | | 1843107 | OPEL | Vectra B |
| 812118 | | 1618110 | OPEL | Vectra B |
| 812126 | | 1618248 | OPEL | Omega B (94>) |
| 812128 | | 5001833355 | RENAULT TRUCKS | Premium |
| 812129 | | 1041092 | FORD | Escort (90>94) |
| 812130 | | 5001829118 | RENAULT TRUCKS | AE |
| 812132 | | 98418409 | IVECO TRUCKS | Eurocargo |
| 812133 | | 98430072 | IVECO TRUCKS | Eurostar |
| 812134 | | 0038350001 | MERCEDES | V Class (638/2) |
| 812139 | | 6025170679 | RENAULT | Espace II (91>96) |
| 812141 | | 6448F9 | CITROEN | Jumper (94>2001) |
| 812145 | | 46722095 | FIAT | Barchetta (95>2003) |
| 812146 | | 1806116 | OPEL | Astra F (91>98) |
| 812148 | | 1806108 | OPEL | Corsa A (82>93) |
| 812149 | | 1618020 | OPEL | Corsa B (93>2000) |
| 812150 | | 1806110 | OPEL | Kadett E (84>91) |
| 812154 | | 7701036909 | RENAULT | Twingo (93>) |
| 812156 | | 7754065 | FIAT | Marengo (159) (89>95) |
| 812157 | | 7701204680 | RENAULT | R19 |
| 812161 | | 7701205450 | RENAULT | Megane Scenic (96>2003) |
| 812162 | | 7701205451 | RENAULT | Megane Scenic (96>2003) |
| 812169 | | 7701045552 | RENAULT | Clio II |
| 812170 | | 7701205584 | RENAULT | Master (97>2003) |
| 812176 | | 60779470 | ALFA ROMEO | 145 |
| 812181 | | 6448G9 | PEUGEOT | 406 (95>) |
| 812194 | | 71714180 | FIAT | Marea |
| 812211 | | 46723042 | FIAT | Punto II (99>2005) |
| 812212 | | 6448J6 | PEUGEOT | 607 (2000>2004) |
| 812215 | | 6448J8 | CITROEN | C5 (2001>2004) |
| 812220 | | 64118372783 | BMW | 3 series E46 |
| 812221 | | 6448G3 | CITROEN | Xsara Picasso |
| 812222 | | 1618142 | OPEL | Astra G (98>) |
| 812223 | | 7701205538 | RENAULT | Kangoo (97>2003) |
| 812225 | | 1618222 | OPEL | Corsa C (2000>2006) |
| 812234 | | 6448K9 | CITROEN | C2 |
| 812235 | | 6445PT | CITROEN | C2 |
| 812238 | | 64111373772 | BMW | 3 series E21 |
| 812239 | | 64118351171 | BMW | 5 series E34 |
| 812240 | | 64111393212 | BMW | 3 series E36 |

| Valeo | | OE | | |
|---|---|---|---|---|
| 812245 | | 281265303B | VOLKSWAGEN | LT (75>96) |
| 812247 | | 7701208323 | RENAULT | Megane II |
| 812249 | | 27143AX00 | NISSAN | Micra (K12) (2003>) |
| 812250 | | 27140AX700 | NISSAN | Micra (K12) (2003>) |
| 812251 | | 0038353501 | MERCEDES | Sprinter (95>) |
| 812253 | | 1618260 | OPEL | Signum |
| 812254 | | 1K0819031B | AUDI | A3 (2003>) |
| 812255 | | 8E1820031 | AUDI | A4 (2000>2004) |
| 812256 | | 8E2820031 | AUDI | A4 (2000>2004) |
| 812268 | | JEF100150 | LAND ROVER | Freelander |
| 812272 | | 1011670 | FORD | Fiesta (95>2002) |
| 812273 | | 1062254 | FORD | Focus (98>2004) |
| 812274 | | 1062256 | FORD | Focus (98>2004) |
| 812275 | | 1114283 | FORD | Cougar |
| 812276 | | 7110379 | FORD | Transit (95>99) |
| 812277 | | 7121563 | FORD | Transit (95>99) |
| 812278 | | 46799655 | ALFA ROMEO | 147 (2000>) |
| 812279 | | 60779298 | ALFA ROMEO | 156 (97>2003) |
| 812280 | | 46722928 | FIAT | Idea |
| 812281 | | 46722359 | FIAT | Brava |
| 812283 | | 7078698 | FIAT | Palio |
| 812284 | | 1618134 | OPEL | Astra G (98>) |
| 812285 | | 1618206 | OPEL | Astra G (98>) |
| 812286 | | 8710712340 | TOYOTA | Corolla (80) (83>87) |
| 812287 | | 6025370414 | RENAULT | Espace III (96>2000) |
| 812288 | | 6025370415 | RENAULT | Avantime |
| 812294 | | 64118372523 | BMW | 5 series E34 |
| 812296 | | 64118391363 | BMW | 3 series E21 |
| 812299 | | 0028353101 | MERCEDES | S Class (126) |
| 812303 | | 7685154 | FIAT | Cinquecento |
| 812304 | | 0028355501 | MERCEDES | E Class (124) |
| 812308 | | 7701208381 | RENAULT | Modus |
| 812309 | | 7701060003 | RENAULT | Modus |
| 812318 | | 64118372771 | BMW | 3 series E46 |
| 812319 | | 8Z0819030 | AUDI | A2 |
| 812320 | | 1206926 | FORD | Fiesta (2002>) |
| 812321 | | 2038300161 | MERCEDES | C Class (203) (2000>) |
| 812322 | | 6448K0 | PEUGEOT | 307 (2001>2004) |
| 812323 | | 6Q0819031 | SEAT | Cordoba (2002>) |
| 812324 | | 7291900 | FORD | Galaxy (95>2006) |
| 812326 | | 3402363 | VOLVO | 440-460-480 |
| 812327 | | 91442210 | VOLVO | 850 |
| 812328 | | 9171503 | VOLVO | S60 |
| 812329 | | 46723450 | FIAT | Bravo II (2007>) |
| 812332 | | 4042575 | FORD | Transit (2000>) |
| 812334 | | 7684054 | LANCIA | Y10 |
| 812335 | | 96231949 | DAEWOO | Lanos |
| 812336 | | 77362540 | FIAT | Panda (2003>) |
| 812337 | | 644862 | CITROEN | C25 (81>94) |

| Valeo | | OE | | |
|---|---|---|---|---|
| 812338 | | 6448K3 | PEUGEOT | 307 (2001>2004) |
| 812339 | | 6448K4 | PEUGEOT | 307 (2001>2004) |
| 812340 | | 504026720 | IVECO | Daily IV (1999>) |
| 812341 | | 500344178 | IVECO | Daily IV (1999>) |
| 812342 | | 93930678 | IVECO | Daily II (1989>1996) |
| 812343 | | 3090893 | VOLVO TRUCKS | FH 12 (1993>) |
| 812344 | | 1697358 | VOLVO TRUCKS | FL |
| 812345 | | 1624373 | VOLVO TRUCKS | FL |
| 812346 | | 81619010065 | MAN | L 2000 |
| 812347 | | 0018359201 | MERCEDES | LP |
| 812348 | | 0018358301 | MERCEDES | LP |
| 812349 | | 5000294090 | RENAULT TRUCKS | AE |
| 812350 | | 81619010067 | MAN | F 2000 |
| 812351 | | 81619010064 | MAN | F 90 |
| 812352 | | 81619016166 | MAN | TG-A |
| 812353 | | 0008356601 | MERCEDES | O 302 |
| 812354 | | 0028356801 | MERCEDES | MK |
| 812355 | | 5010104657 | RENAULT - IRISBUS | R312 BUS |
| 812356 | | 0028350801 | MERCEDES | NG |
| 812357 | | 0028350901 | MERCEDES | NG |
| 812358 | | 6448H8 | CITROEN | Jumper (94>2001) |
| 812360 | | 64118373786 | BMW | 3 series E36 Compact |
| 812361 | | 7204831 | FORD | Galaxy (95>2006) |
| 812362 | | 64118373175 | BMW | 7 series E38 |
| 812363 | | 1618288 | OPEL | Corsa D (2006>) |
| 812364 | | 4166487 | FORD | Transit (2000>) |
| 812365 | | 64116906270 | BMW | 7 series E65/E66 |
| 812366 | | 2208300261 | MERCEDES | CL Class (215) |
| 812367 | | 1317081 | FORD | Focus (2004>) |
| 812373 | | 7701208766 | RENAULT | Clio III |
| 812374 | | 6001547484 | DACIA | Logan |
| 812375 | | 7701473279 | NISSAN | Primastar |
| 812378 | | 6448P9 | PEUGEOT | 207 |
| 812379 | | 6448P1 | CITROEN | C1 |
| 812380 | | 6448P2 | CITROEN | C1 |
| 812381 | | 6448P3 | CITROEN | C1 |
| 812382 | | 64113422666 | MINI | MINI (R56) (2006>) |
| 812383 | | 46722587 | FIAT | Seicento |
| 812395 | | 9464420380 | FIAT | Ulysse (2002>) |
| 812396 | | 9712302000 | HYUNDAI | Atos |
| 812399 | | 644851 | PEUGEOT | 205 |
| 812400 | | 46721527 | ALFA ROMEO | 166 |
| 812401 | | 64119128953 | BMW | 1 series E81/E87 |
| 812409 | | 9722122000 | HYUNDAI | Accent |
| 812410 | | 0K30C61A10 | KIA | Rio |
| 812411 | | 0K55261H01 | KIA | Carnival |
| 812412 | | 0K55261H01A | KIA | Carnival |
| 812413 | | 271159831R | RENAULT | Megane III |
| 812414 | | 6448P4 | CITROEN | C1 |

| Valeo | | OE | | |
|---|---|---|---|---|
| 812415 | | 6448Q1 | CITROEN | C1 |
| 812416 | | 6448S4 | PEUGEOT | 308 |
| 812417 | | 6448V6 | PEUGEOT | 308 |
| 812423 | | 7701209524 | RENAULT | Megane II |
| 812424 | | 6448W9 | PEUGEOT | 508 |
| 812426 | | 77365588 | ALFA ROMEO | Giulietta |
| 814000 | | 5048350 | SAAB | 9-5 (2001>2004) |
| 814002 | | 3C0820411C | VOLKSWAGEN | Passat (2005>2010) |
| 814003 | | 7701066110 | RENAULT | Master (2006>) |
| 814004 | | 4F0260403E | AUDI | A6 (2004>) |
| 814006 | | 8200332852 | RENAULT | Laguna II (2005>) |
| 814007 | | 8200332851 | RENAULT | Espace IV (2002>2006) |
| 814008 | | 92100JD200 | NISSAN | Qashqai (2007>2010) |
| 814009 | | 92100JD500 | NISSAN | Qashqai (2007>2010) |
| 814010 | | 92100JD700 | NISSAN | Qashqai (2007>2010) |
| 814011 | | 64509169772 | BMW | 1 series E81 |
| 814012 | | 64539169526 | BMW | 1 series E81 |
| 814051 | | 8200513983 | DACIA | Logan |
| 814061 | | 8200448252 | RENAULT | Twingo III (2007>) |
| 814065 | | 6455FW | CITROEN | C8 |
| 814066 | | 1850114 | OPEL | Corsa C (2003>) |
| 814069 | | 6455EP | CITROEN | Jumper (2006>) |
| 814077 | | 8200741257 | DACIA | Sandero |
| 814080 | | 6455CN | CITROEN | Xsara Picasso |
| 814081 | | 6455EC | CITROEN | Jumper (2002>) |
| 814083 | | 1384859 | FORD | Fiesta (2002>2005) |
| 814085 | | 6455EQ | CITROEN | Jumper (2006>) |
| 814087 | | 1383318 | FORD | Transit (2006>) |
| 814090 | | 6455GY | CITROEN | C5 (2008>) |
| 814094 | | 921100001R | RENAULT | Megane III |
| 814095 | | 6455ET | CITROEN | C2 |
| 814113 | | 64539219843 | BMW | 5 series F10 (2010>) |
| 814155 | | 51786211 | FIAT | 500 Nuova (2007>) |
| 814158 | | 8845047020 | TOYOTA | Prius (2003>2009) |
| 814159 | | 80101SEFE11 | HONDA | Accord (2003>2008) |
| 814165 | | JRW000020 | LAND ROVER | Range Rover (2002>2009) |
| 814167 | | 99657311103 | PORSCHE | 911 Carrera (04>08) |
| 814171 | | 8200774211 | RENAULT | Trafic (2006>) |
| 814172 | | 8200465490 | RENAULT | Trafic (2006>) |
| 814173 | | 6455GZ | CITROEN | C5 (2008>) |
| 814178 | | 8200880551 | DACIA | Duster |
| 814179 | | 921005824R | RENAULT | Master (2010 >) |
| 814184 | | 1437112 | FORD | Galaxy (2006>) |
| 814185 | | 1522067 | FORD | Kuga |
| 814186 | | 1715000154 | MERCEDES | SLK (171) |
| 814187 | | 921000294R | RENAULT | Megane III |
| 814188 | | 921001367R | RENAULT | Fluence électrique |
| 814189 | | 64539218121 | BMW | 1 series |
| 814190 | | 64539218122 | BMW | 3 series |



• **New** Nouveau **Nuevo** Novo **Nuovo** Nieuw **Neu** Nowość **Yeni** Новый N **Novy**

| Valeo | | OE | | |
|---|---|---|---|---|
| 814191 | | 64539218123 | BMW | 1 series |
| 814192 | | 64537618770 | BMW | 5 series |
| 814197 | | 8V6119710FA | FORD | C-Max |
| 814198 | | 51708843 | LANCIA | Lybra |
| 814199 | | C2S31605 | JAGUAR | X-Type |
| 814201 | | 1850136 | OPEL | Astra J (2009>) |
| 814202 | | 1850135 | OPEL | Astra J (2009>) |
| 814203 | | 8846160100 | TOYOTA | Land Cruiser (96>2002) |
| 814204 | | 8846042100 | TOYOTA | RAV 4 (2006>) |
| 814205 | | 8845012290 | TOYOTA | Auris (2006>) |
| 814206 | | 88450B4020 | DAIHATSU | Terios 2 (2006>) |
| 814207 | | 8846044520 | TOYOTA | Avensis Verso (2001>2005) |
| 814208 | | 8845005100 | TOYOTA | Avensis (2003>2008) |
| 814209 | | 8845005120 | TOYOTA | Avensis (2003>2008) |
| 814210 | | 8845002240 | TOYOTA | Corolla (120) (2001>) |
| 814211 | | 884500F110 | TOYOTA | Corolla Verso (2004>2009) |
| 814212 | | 884500F100 | TOYOTA | Corolla Verso (2004>2009) |
| 814213 | | 8845005170 | TOYOTA | Avensis (2003>2008) |
| 814214 | | 7812A171 | MITSUBISHI | L 200 II (K84T) (2006>) |
| 814215 | | F15161480 | MAZDA | RX8 (2003>) |
| 814216 | | BPYK6148ZA | MAZDA | 3 (2003>2006) |
| 814217 | | 80110SNBA41 | HONDA | Civic (FK/FD) (2006>) |
| 814218 | | 8846042070 | TOYOTA | RAV 4 (2000>2005) |
| 814219 | | 9531051K00 | SUZUKI | Splash |
| 814220 | | 8846074010 | TOYOTA | IQ |
| 814221 | | 92110EW80A | NISSAN | Juke |
| 814223 | | 884600D050 | TOYOTA | Yaris (2005>) |
| 814224 | | 884600D060 | TOYOTA | Yaris (2005>) |
| 814225 | | 80110S9A003 | HONDA | CR-V (2002>2006) |
| 814226 | | 8846053030 | LEXUS | IS (2005>) |
| 814227 | | NE5161480C | MAZDA | MX5 (2005>) |
| 814228 | | 9531064J00 | SUZUKI | Grand Vitara (98>2005) |
| 814230 | | 8846160091 | TOYOTA | Land Cruiser (2002>) |
| 814231 | | 92100JG000 | NISSAN | X-Trail (2007>) |
| 814232 | | 80110SWAA01 | HONDA | CR-V (2006>2010) |
| 814233 | | 8846052110 | TOYOTA | Yaris (2005>) |
| 814234 | | 8845012280 | TOYOTA | Auris (JPP150) (2006>) |
| 814235 | | EH4461480A | MAZDA | CX-7 (2007>) |
| 814236 | | 8846135160 | TOYOTA | Land Cruiser (2002>) |
| 814237 | | 9531063J00 | SUZUKI | Swift (2005>) |
| 814238 | | 8846012540 | TOYOTA | Corolla (120) (2001>) |
| 814239 | | LD4761480A | MAZDA | MPV |
| 814240 | | MB657967 | MITSUBISHI | Colt (91>96) |
| 814241 | | 80110SAA003 | HONDA | Jazz (2002>) |
| 814242 | | 80110SEA003 | HONDA | Accord (2003>2008) |
| 814243 | | 80110S5A003 | HONDA | Civic (EP) (2001>) |
| 814244 | | 9531067A50 | SUZUKI | Vitara |
| 814245 | | 8846035130 | TOYOTA | HILUX |
| 814246 | | 8846005010 | TOYOTA | Carina E (92>97) |

| Valeo | | OE | | |
|---|---|---|---|---|
| 814247 | | 8846006061 | TOYOTA | Camry (96>2001) |
| 814248 | | 8846012460 | TOYOTA | Corolla (100) (92>97) |
| 814250 | | 0K01161480C | KIA | Sportage |
| 814251 | | GA5R61480A | MAZDA | MX6 |
| 814252 | | 92101G9800 | NISSAN | Patrol (79>97) |
| 814253 | | B01W61480F | MAZDA | 323 (BA) (94>96) |
| 814254 | | GA7H61480 | MAZDA | 626 (GE) (91>97) |
| 814255 | | 9760622051 | HYUNDAI | Accent (94>99) |
| 814256 | | 921100L710 | NISSAN | Maxima QX |
| 814257 | | BC1M61480A | MAZDA | 323 (BA) (96>98) |
| 814258 | | D20161480B | MAZDA | Demio |
| 814259 | | 73210AC021 | SUBARU | Legacy (94>97) |
| 814260 | | MR513005 | MITSUBISHI | Galant (96>2003) |
| 814261 | | 8846028550 | TOYOTA | Previa (2000>) |
| 814262 | | MR996738 | MITSUBISHI | Space Wagon (98>) |
| 814263 | | 8845002170 | TOYOTA | Corolla Verso (2001>2003) |
| 814264 | | 976062D000 | HYUNDAI | Coupe (2002>) |
| 814265 | | BP4K61480B | MAZDA | 3 (FL) (2006>) |
| 814266 | | LD4761480 | MAZDA | MPV |
| 814267 | | 80100S7A013 | HONDA | Stream |
| 814268 | | 73210FC030 | SUBARU | Forester (97>2002) |
| 814269 | | 8846035280 | TOYOTA | HILUX |
| 814270 | | OK55261460D | KIA | Carnival |
| 814271 | | 8845005140 | TOYOTA | Avensis (2003>2008) |
| 814272 | | MN134204 | MITSUBISHI | Lancer (2003>) |
| 814273 | | MN151100 | MITSUBISHI | Lancer (2003>) |
| 814274 | | GJ5161480B | MAZDA | 626 (GD) (87>92) |
| 814275 | | 9211165Y00 | NISSAN | Sunny (Y10) (90>96) |
| 814276 | | 80100SM1A23 | HONDA | Accord coupe (91>93) |
| 814277 | | 96265216 | DAEWOO | Espero |
| 814278 | | BR7061480 | MAZDA | 323 (BG) (89>94) |
| 814279 | | 8846032090 | TOYOTA | Camry (86>91) |
| 814280 | | 8846160051 | TOYOTA | Land Cruiser (80>96) |
| 814281 | | BB7C61480 | MAZDA | 323 (BF) (85>89) |
| 814282 | | 8846033010 | TOYOTA | Camry (91>96) |
| 814283 | | 8846006060 | TOYOTA | Camry (96>2001) |
| 814284 | | 9211001G61 | NISSAN | Terrano (87>95) |
| 814285 | | 8846042021 | TOYOTA | RAV 4 (94>2000) |
| 814286 | | 8A0260403D | AUDI | 80 (91>95) |
| 814287 | | 64536914033 | BMW | Z4 (2002>2009) |
| 814288 | | 893260403L | AUDI | 80 (91>95) |
| 814289 | | 7286932 | FORD | Scorpio (94>98) |
| 814290 | | 4809129AA | CHRYSLER | Voyager (96>2001) |
| 814291 | | 893260403 | AUDI | 80 (86>91) |
| 814292 | | 82471989 | FIAT | Croma |
| 814293 | | 82487879 | ALFA ROMEO | 166 (98>2003) |
| 814295 | | 443260403F | AUDI | 100 (82>90) |
| 814296 | | 8A0260403AC | AUDI | 80 (91>95) |
| 814298 | | 8846002050 | TOYOTA | Corolla (110) (97>99) |

| Valeo | | OE | | |
|---|---|---|---|---|
| 814300 | | 9211050B00 | NISSAN | Micra (K11) (92>2000) |
| 814302 | | 80110SV1A11 | HONDA | Accord coupe (93>97) |
| 814303 | | MR218428 | MITSUBISHI | Colt (96>) |
| 814304 | | 92110VJ200 | NISSAN | King Cab (D22) |
| 814305 | | 9531060G41 | SUZUKI | Baleno |
| 814306 | | 73210FC000 | SUBARU | Forester (97>2002) |
| 814307 | | 8846052010 | TOYOTA | Yaris (99>2005) |
| 814308 | | 8846035200 | TOYOTA | HILUX |
| 814309 | | 8846052040 | TOYOTA | Yaris (99>2005) |
| 814310 | | 8846050120 | LEXUS | LS 400 (94>2000) |
| 814311 | | 73210FC050 | SUBARU | Forester (97>2002) |
| 814312 | | 73210SA011 | SUBARU | Forester (2002>) |
| 814314 | | 73210AG000 | SUBARU | Legacy (98>2002) |
| 814315 | | 6455FA | CITROEN | C Crosser |
| 814316 | | CB0561480B | MAZDA | Premacy (99>2001) |
| 814317 | | 4382396 | SAAB | 900 (79>93) |
| 816552 | | 7700795175 | RENAULT | Espace II (91>96) |
| 816554 | | 1300L9 | CITROEN | XM (89>94) |
| | | 1300L9 | PEUGEOT | 605 (89>94) |
| 816555 | | 1300N9 | PEUGEOT | 309 (85>89) |
| 816646 | | 93808688 | IVECO | Daily (78>89) |
| 816647 | | 1907918 | IVECO | Daily (89>96) |
| 816649 | | 93822906 | IVECO | Daily (89>96) |
| 816654 | | 7701034767 | RENAULT | Clio (90>98) |
| 816655 | | 7700805486 | RENAULT | Clio (90>98) |
| 816656 | | 7701034768 | RENAULT | Clio (90>98) |
| 816657 | | 7701034770 | RENAULT | Clio (90>98) |
| 816658 | | 7701047886 | RENAULT | Clio (90>98) |
| 816700 | | 1300N8 | PEUGEOT | 309 (85>89) |
| 816703 | | 867121253L | VOLKSWAGEN | Polo (90>94) |
| 816706 | | 95659648 | CITROEN | AX (86>91) |
| 816707 | | 7711521 | AUTOBIANCHI | Y10 |
| | | 71735368 | FIAT | Panda |
| | | 71735368 | LANCIA | Y10 |
| 816710 | | 0060538379 | ALFA ROMEO | 33 (89>94) |
| 816715 | | 1301TG | CITROEN | ZX |
| | | 1301TG | PEUGEOT | 306 (93>97) |
| 816716 | | 9607690980 | CITROEN | Fukang |
| 816756 | | 7701204955 | RENAULT | Safrane |
| 816803 | | 6453V5 | CITROEN | Xantia (93>97) |
| 816835 | | 6455R3 | PEUGEOT | 405 (92>96) |
| 816836 | | 7701040663 | RENAULT | Espace III (96>2000) |
| 816839 | | 7701204731 | RENAULT | Espace III (96>2000) |
| 816850 | | 6455Y6 | CITROEN | XM (89>94) |
| 816851 | | 0384E7 | CITROEN | Evasion (94>98) |
| | | 1472059080 | FIAT | Ulysse (94>98) |
| | | 1472059080 | LANCIA | Zeta |
| | | 0384E7 | PEUGEOT | 806 (94>98) |
| 816852 | | 6455Y3 | CITROEN | Evasion (94>98) |

| Valeo | | OE | | |
|---|---|---|---|---|
| 816863 | | 7700272488 | RENAULT | R19 |
| 816865 | | 7701039742 | RENAULT | Safrane |
| 816866 | | 7700840853 | RENAULT | R21 |
| 816867 | | 7700876215 | RENAULT | Espace III (96>2000) |
| 816889 | | 0384E8 | CITROEN | Xantia (93>97) |
| 816890 | | 9015010701 | MERCEDES | Sprinter (95>) |
| | | 2D0145805D | VOLKSWAGEN | LT II (96>2003) |
| 816891 | | 9015000554 | MERCEDES | Sprinter (95>2006) |
| 816900 | | 2028300870 | MERCEDES | C Class (202) (93>2001) |
| 816902 | | 1618108 | OPEL | Corsa B (93>2000) |
| 816908 | | 6K0820413B | SEAT | Cordoba (93>96) |
| 816910 | | 1H0820413 | VOLKSWAGEN | Golf II Cabriolet (93>98) |
| 816912 | | 7700432391 | RENAULT | Megane (95>99) |
| 816918 | | 0384F4 | PEUGEOT | 406 (95>99) |
| 816919 | | 0384F1 | CITROEN | XM (94>2001) |
| | | 0384F1 | PEUGEOT | 605 (94>99) |
| 816921 | | JRB100310 | ROVER | 25 (99>) |
| 816922 | | 64538373924 | BMW | 7 series E38 |
| 816924 | | 1618109 | OPEL | Tigra (94>2003) |
| 816945 | | 4798015 | CHRYSLER | Voyager (96>2001) |
| 816948 | | 1029057 | FORD | Galaxy (95>2000) |
| 816949 | | 2018300370 | MERCEDES | 190 (201) |
| 816959 | | 4798014 | CHRYSLER | Voyager (96>2001) |
| 816962 | | 5000752789 | RENAULT TRUCKS | AE |
| 816964 | | 6455V0 | CITROEN | Saxo (96>99) |
| 816967 | | 8D0260403C | AUDI | A4 (94>2000) |
| 816973 | | 60610662 | ALFA ROMEO | 145 |
| 816977 | | 6455V5 | PEUGEOT | 106 (96>2003) |
| 816980 | | 5010315281 | RENAULT TRUCKS | Kerax |
| 816981 | | 64531392941 | BMW | 8 series E31 |
| 816984 | | 6455V8 | CITROEN | Berlingo (96>2002) |
| 816985 | | 46440250 | FIAT | Marea |
| 816987 | | 7701205214 | RENAULT | Safrane |
| 816991 | | 5011395AA | CHRYSLER | Stratus |
| 816996 | | 2D0820413C | VOLKSWAGEN | LT II (96>2003) |
| 817011 | | 6388350170 | MERCEDES | V Class (638/2) |
| 817015 | | 4644365 | CHRYSLER | Grand Voyager (91>96) |
| 817022 | | 55115863 | JEEP | Cherokee (77>2001) |
| 817023 | | 55115864 | JEEP | Grand Cherokee (93>99) |
| 817024 | | 1HM820413B | VOLKSWAGEN | Golf III Cabriolet (98>2002) |
| 817042 | | 6455Y2 | CITROEN | Xsara (97>2000) |
| 817061 | | 7701204841 | RENAULT | Safrane |
| 817065 | | 4500908 | OPEL | Movano |
| 817067 | | AWR5796 | LAND ROVER | Freelander |
| 817073 | | 4662589 | CHRYSLER | Voyager (96>2001) |
| 817074 | | 4682591 | CHRYSLER | Grand Voyager (2001>2004) |
| 817075 | | 4758305 | CHRYSLER | 300M |
| 817115 | | 4500847 | OPEL | Movano |
| | | 7701043695 | RENAULT | Master (97>2003) |



• **New** Nouveau **Nuevo** Novo **Nuovo** Nieuw **Neu** Nowość **Yeni** Новый N **Novy**

| Valeo | | OE | | |
|---|---|---|---|---|
| 817115... | | 9161147 | VAUXHALL | Movano |
| 817171 | | 7700414103 | RENAULT | Clio II (98>2001) |
| 817197 | | 7700432392 | RENAULT | Megane (95>99) |
| 817204 | | 0384E5 | CITROEN | XM (94>2001) |
| | | 0384E5 | PEUGEOT | 605 (94>99) |
| 817225 | | 1061104 | FORD | Ka |
| 817229 | | 6455AW | CITROEN | Xsara (97>2000) |
| 817230 | | 6455AV | CITROEN | Xsara (97>2000) |
| 817232 | | 4144369 | FORD | Cougar |
| 817235 | | 2108300470 | MERCEDES | E Class (210) |
| 817238 | | 1124704 | FORD | Mondeo (2000>) |
| 817244 | | 1J0820413N | AUDI | A3 (96>2003) |
| 817245 | | 6K0820411 | SEAT | Cordoba (99>2002) |
| 817246 | | 6X0820413 | SEAT | Arosa |
| 817247 | | 6X0820413A | SEAT | Arosa |
| 817248 | | 64538391647 | BMW | 5 series E39 |
| 817252 | | 2108300570 | MERCEDES | E Class (210) |
| 817253 | | 921102F000 | NISSAN | Primera (P11) (96>2001) |
| 817275 | | 4576039 | SAAB | 9-5 (2001>2004) |
| 817276 | | 4726568 | SAAB | 9-5 (97>2001) |
| 817283 | | 6455X9 | PEUGEOT | 206 |
| 817288 | | 55115918AB | JEEP | Grand Cherokee (93>99) |
| 817372 | | 7D0145805 | VOLKSWAGEN | Transporter (F7D) (96>2003) |
| 817375 | | 6453JA | PEUGEOT | 406 (95>) |
| 817379 | | 5010382644 | RENAULT | Mascott |
| 817380 | | 5010382814 | RENAULT VI | Mascott |
| 817383 | | 64538377614 | BMW | 3 series E46 |
| 817384 | | 46754752 | FIAT | Bravo |
| 817385 | | 46829340 | FIAT | Punto II (99>2003) |
| 817386 | | 46459581 | LANCIA | Lybra |
| 817405 | | 64538377648 | BMW | 3 series E46 |
| 817406 | | 64538378439 | BMW | 7 series E38 |
| 817427 | | 1C0820413A | VOLKSWAGEN | New Beetle (98>2001) |
| 817428 | | 8200106950 | RENAULT | Clio II (98>2001) |
| 817437 | | 0384F3 | CITROEN | C5 (2001>2004) |
| | | 0384F3 | PEUGEOT | 406 (99>) |
| 817438 | | 8N0145805C | AUDI | TT (98>2006) |
| 817445 | | 5017405 | CHRYSLER | PT Cruiser |
| 817446 | | 1638300370 | MERCEDES | M Class (163) |
| 817457 | | 1J0145803A | AUDI | A3 (96>2003) |
| | | 1J0145803T | SEAT | Leon |
| | | 1J0145803T | SKODA | Octavia (2000>2004) |
| | | 1J0145803T | VOLKSWAGEN | Bora |
| 817458 | | 1638300170 | MERCEDES | M Class (163) |
| 817463 | | 46768973 | ALFA ROMEO | 147 (2000>2004) |
| 817464 | | 6453FH | CITROEN | C5 (2001>2004) |
| 817465 | | 6453FP | CITROEN | C5 (2001>2004) |
| 817475 | | 5017621 | CHRYSLER | Sebring |
| 817477 | | 4809267AC | CHRYSLER | Grand Voyager (2001>2004) |

| Valeo | | OE | | |
|---|---|---|---|---|
| 817486 | | 6E0145805B | SEAT | Arosa |
| | | 6E0145805B | VOLKSWAGEN | Lupo |
| 817487 | | 8L9145806B | AUDI | S3 (98>2003) |
| | | 8L9145806B | SEAT | Leon |
| 817488 | | 8L9145805H | AUDI | S3 (98>2003) |
| | | 8L9145805H | SEAT | Leon |
| 817490 | | 8200047162 | RENAULT | Megane (95>99) |
| 817492 | | 2028300770 | MERCEDES | C Class (202) (93>2001) |
| 817493 | | 1086534 | FORD | Focus (98>2001) |
| 817504 | | 1685000454 | MERCEDES | A Class (168) (97>2003) |
| 817505 | | 1850074 | OPEL | Astra G (98>) |
| 817506 | | 1850078 | OPEL | Astra G (98>) |
| 817507 | | 4634937 | SAAB | 900 (93>) |
| 817508 | | 6455CV | CITROEN | Xsara (2000>) |
| 817509 | | 7700434383 | RENAULT | Megane Scenic (96>99) |
| 817524 | | 6455AA | PEUGEOT | 307 (2001>2005) |
| 817526 | | 6455AC | PEUGEOT | 307 (2001>2005) |
| 817527 | | 46790658 | ALFA ROMEO | 147 (2000>2004) |
| 817547 | | 64531490572 | MINI | MINI |
| 817549 | | JRB101070 | LAND ROVER | Freelander |
| 817554 | | 1449600QAA | NISSAN | Primastar (2002>2006) |
| | | 4408078 | OPEL | Vivaro (2001>2006) |
| | | 7700312903 | RENAULT | Trafic (2001>2006) |
| | | 91166035 | VAUXHALL | Vivaro (2001>2006) |
| 817555 | | 1C0145803D | VOLKSWAGEN | New Beetle (2001>2005) |
| 817556 | | 6Q0145804A | SEAT | Cordoba (2002>) |
| | | 6Q0145804A | SKODA | Fabia (99>2004) |
| | | 6Q0145804A | VOLKSWAGEN | Fox |
| 817557 | | 1J0145803N | AUDI | A3 (96>2003) |
| 817558 | | 6Q0145804E | SEAT | Cordoba (2002>) |
| | | 6Q0145804E | SKODA | Fabia (99>2004) |
| | | 6Q0145804E | VOLKSWAGEN | Polo (2001>) |
| 817559 | | 30871579 | VOLVO | S40 |
| 817560 | | CAB311B080 | MITSUBISHI | Carisma (95>99) |
| 817561 | | 64538375513 | BMW | 5 series E39 |
| 817562 | | 2028300970 | MERCEDES | C Class (202) (93>2001) |
| 817563 | | 2028301070 | MERCEDES | C Class (202) (93>2001) |
| 817567 | | 1232914 | FORD | Mondeo (2000>2002) |
| 817568 | | 8200008763 | RENAULT | Laguna II (2001>) |
| 817569 | | 8E0260403B | AUDI | A4 (2000>2004) |
| 817570 | | 8Z0260403D | AUDI | A2 |
| 817575 | | 64536914216 | BMW | X5 |
| 817577 | | 4408646 | OPEL | Vivaro |
| 817578 | | 0384F7 | PEUGEOT | 406 (95>99) |
| 817579 | | 6455AP | CITROEN | C8 |
| 817580 | | 60678468 | LANCIA | Thesis |
| 817582 | | 5072262AA | CHRYSLER | Grand Voyager (2001>2004) |
| 817601 | | 7701049665 | RENAULT | Master (97>2003) |
| 817602 | | 7700436062 | RENAULT | Clio II (2001>2005) |

| Valeo | | OE | | |
|---|---|---|---|---|
| 817603 | | 921109F515 | NISSAN | Primera (P11) (96>2001) |
| 817607 | | 64538378438 | BMW | 5 series E39 |
| 817608 | | 8200115543 | RENAULT | Megane II |
| 817609 | | 1850091 | OPEL | Corsa C (2000>2003) |
| 817610 | | 1850090 | OPEL | Corsa C (2000>2003) |
| 817625 | | 058145805G | AUDI | A4 (94>98) |
| | | 058145805B | VOLKSWAGEN | Passat (96>2000) |
| 817632 | | 0384E4 | CITROEN | Jumper (94>2001) |
| | | 1340934080 | FIAT | Ducato (2002>2006) |
| | | 0384E4 | PEUGEOT | Boxer (94>2001) |
| 817634 | | 3D0145803 | VOLKSWAGEN | Phaeton (2007>) |
| 817635 | | 3D0145804 | VOLKSWAGEN | Phaeton (2007>) |
| 817636 | | 1449600QAB | NISSAN | Primastar (2002>2006) |
| | | 4411898 | OPEL | Vivaro (2001>2006) |
| | | 8200219497 | RENAULT | Trafic (2001>2006) |
| | | 93850451 | VAUXHALL | Vivaro (2001>2006) |
| 817637 | | 4415074 | OPEL | Movano |
| | | 7701057121 | RENAULT | Master (2003>) |
| | | 93179776 | VAUXHALL | Movano |
| 817638 | | 0384G4 | CITROEN | C4 |
| | | 0384G4 | PEUGEOT | 307 (2005>) |
| 817639 | | 0384G6 | CITROEN | C5 (2004>2007) |
| | | 0384G6 | PEUGEOT | 407 |
| 817640 | | 14461AY600 | NISSAN | Micra (K12) (2003>) |
| 817644 | | 4414387 | OPEL | Vivaro |
| 817645 | | 4414580 | OPEL | Vivaro |
| 817646 | | 8200245598 | RENAULT | Clio II (2001>2005) |
| 817647 | | 1850076 | OPEL | Signum |
| 817648 | | 1850077 | OPEL | Signum |
| 817650 | | 0384G0 | CITROEN | C8 |
| | | 1489396080 | FIAT | Ulysse (2002>) |
| | | 1489396080 | LANCIA | Phedra |
| | | 0384G0 | PEUGEOT | 807 |
| 817651 | | 0384G2 | CITROEN | C3 (2002>2005) |
| 817653 | | 1J0145803M | AUDI | A3 (96>2003) |
| | | 1J0145803N | SEAT | Leon |
| | | 1J0145803N | SKODA | Octavia (2000>2004) |
| | | 1J0145803M | VOLKSWAGEN | Bora |
| 817654 | | 2141000QAB | NISSAN | Kubistar |
| | | 8200140970 | RENAULT | Kangoo (2003>) |
| 817655 | | 6455Z1 | CITROEN | Saxo (99>) |
| 817657 | | 1152429 | FORD | Mondeo (2000>2002) |
| 817659 | | 1685000854 | MERCEDES | A Class (168) (97>2003) |
| 817661 | | 8200708130 | RENAULT | Kangoo (2003>) |
| 817662 | | 8200708128 | RENAULT | Kangoo (2003>) |
| 817664 | | 1254203 | FORD | Fiesta (2002>2005) |
| 817665 | | 4B0260403AA | AUDI | A6 (97>2001) |
| 817666 | | 4B0260403T | AUDI | A6 (97>2001) |
| 817667 | | 6455CQ | CITROEN | Xsara (2000>) |

| Valeo | | OE | | |
|---|---|---|---|---|
| 817668 | | 6455AQ | CITROEN | C8 |
| 817669 | | 46745840 | FIAT | Stilo (2001>2004) |
| 817670 | | 1850051 | OPEL | Vectra B (95>99) |
| 817674 | | 8846052020 | TOYOTA | Yaris (99>2005) |
| 817675 | | 9171271 | VOLVO | 850 |
| 817679 | | 3B0260401 | SKODA | Superb |
| 817684 | | 46788049 | FIAT | Punto II (99>2003) |
| 817685 | | 46788052 | FIAT | Punto II (99>2003) |
| 817686 | | 6Q0820411K | SEAT | Cordoba (2002>) |
| 817687 | | 8200137650 | RENAULT | Kangoo (2003>) |
| 817689 | | 4401424 | OPEL | Movano |
| 817697 | | 6302041 | OPEL | Signum |
| | | 24418366 | VAUXHALL | Signum (2003>2005) |
| 817698 | | 1794027010 | TOYOTA | Avensis (2000>2003) |
| 817701 | | 8200182361 | DACIA | Logan |
| 817703 | | 51712975 | FIAT | Punto II (2003>) |
| 817706 | | 0384G5 | CITROEN | Xsara Picasso |
| 817711 | | 12793296 | SAAB | 9-3 (2002>) |
| 817712 | | 12793295 | SAAB | 9-3 (2002>) |
| 817729 | | 6302040 | OPEL | Signum |
| | | 12788019 | SAAB | 9-3 (2002>) |
| | | 24418365 | VAUXHALL | Signum (2003>2005) |
| 817730 | | 51770436 | FIAT | Croma II (2005>2007) |
| | | 6302059 | OPEL | Signum |
| | | 13167338 | VAUXHALL | Signum (2003>2005) |
| 817731 | | 8200033733 | RENAULT | Espace IV (2002>2006) |
| 817732 | | 921106F600 | NISSAN | Micra (K11) (92>2000) |
| 817736 | | 5142489AA | CHRYSLER | Grand Voyager (2004>2008) |
| 817739 | | 5142490AA | CHRYSLER | Grand Voyager (2004>) |
| 817740 | | 6455EY | CITROEN | C5 (2004>) |
| 817741 | | 8E0260403D | AUDI | A4 (2000>2004) |
| 817742 | | 2765000QAF | NISSAN | Interstar |
| 817748 | | 46810017 | ALFA ROMEO | 147 (2000>2004) |
| | | 55197877 | FIAT | Brava |
| | | 46810017 | LANCIA | Lybra |
| 817749 | | 55181418 | FIAT | Doblo (2000>2003) |
| 817750 | | 73500545 | ALFA ROMEO | 147 (2004>) |
| | | 73500545 | FIAT | Bravo II (2007>) |
| 817751 | | 1628KC | CITROEN | C5 (2001>2004) |
| | | 1628KC | PEUGEOT | 406 (99>) |
| 817752 | | 1628LY | CITROEN | C5 (2001>2004) |
| | | 1628LY | PEUGEOT | 607 (2000>2004) |
| 817753 | | 161835 | CITROEN | C4 |
| | | 1233381 | FORD | Focus C-Max (2007>) |
| | | 161835 | PEUGEOT | 307 (2005>) |
| | | 8653691 | VOLVO | C30 |
| 817754 | | 038131513S | AUDI | A4 (2004>) |
| | | 038131513S | SKODA | Superb |
| | | 038131513S | VOLKSWAGEN | Passat (2000>) |



• **New** Nouveau **Nuevo** Novo **Nuovo** Nieuw **Neu** Nowość **Yeni** Новый N **Novy**

| Valeo | | OE | | |
|---|---|---|---|---|
| 817757 | | 0384F8 | PEUGEOT | 406 (99>) |
| 817759 | | 1685000000 | MERCEDES | A Class (168) (97>2003) |
| 817760 | | 2035000000 | MERCEDES | C Class (203) (2000>2003) |
| 817761 | | 028145805 | AUDI | 80 (91>95) |
| 817762 | | 8A0145805B | AUDI | 80 (91>95) |
| 817764 | | 1H0145805B | VOLKSWAGEN | Golf III (91>97) |
| 817765 | | 1E0145805 | VOLKSWAGEN | Golf III Cabriolet (98>2002) |
| 817766 | | 6K0145805 | SEAT | Cordoba (96>99) |
| | | 6K0145805 | VOLKSWAGEN | Polo (94>99) |
| 817767 | | 6K0145805E | SEAT | Cordoba (99>2002) |
| | | 6K0145805C | VOLKSWAGEN | Polo (99>2001) |
| 817777 | | 1K0820411H | AUDI | A3 (2003>2008) |
| 817780 | | 80110S6DG01 | HONDA | Civic (EP) (2001>) |
| 817781 | | 80100SN7E01 | HONDA | Accord (93>95) |
| 817783 | | 80100S84A00 | HONDA | Accord coupe (97>2002) |
| 817790 | | MR513110 | MITSUBISHI | Carisma (99>) |
| 817792 | | 921102M112 | NISSAN | Almera (95>2000) |
| 817794 | | 921102M117 | NISSAN | Almera (95>2000) |
| 817799 | | 7700428315 | RENAULT | Twingo (93>98) |
| 817801 | | 0001632V003 | MCC | Smart - For Two |
| 817802 | | 8845005010 | TOYOTA | Avensis (97>2000) |
| 817803 | | 8845005020 | TOYOTA | Avensis (97>2000) |
| 817805 | | 8845013031 | TOYOTA | Corolla (120) (2001>) |
| 817806 | | 1T0820411E | VOLKSWAGEN | Touran (2003>2006) |
| 817809 | | 1850095 | OPEL | Signum |
| 817818 | | 60668109 | ALFA ROMEO | 147 (2000>2004) |
| 817819 | | 92110BM405 | NISSAN | Almera (2000>2003) |
| 817822 | | 92100BN900 | NISSAN | Almera (2000>2003) |
| 817824 | | 6455FX | CITROEN | C5 (2004>) |
| 817827 | | 8200241088 | DACIA | Logan |
| 817828 | | 8200292773 | RENAULT | Espace IV FL (2006>) |
| 817837 | | 64536918597 | MINI | MINI |
| 817839 | | 1850096 | OPEL | Astra H (2004>) |
| 817840 | | 8D0260403G | AUDI | A4 (94>2000) |
| 817841 | | 4145000054 | MERCEDES | Vaneo (414) |
| 817842 | | 6398350070 | MERCEDES | Viano |
| 817843 | | 1850092 | OPEL | Corsa C (2003>) |
| 817844 | | 1850093 | OPEL | Corsa C (2003>) |
| 817845 | | 0384H5 | CITROEN | C4 |
| | | 0384H5 | PEUGEOT | 307 (2005>) |
| 817846 | | 1850097 | OPEL | Astra H (2004>) |
| 817847 | | 1850099 | OPEL | Astra H (2004>) |
| 817848 | | 2035000554 | MERCEDES | C Class (203) (2000>2003) |
| 817849 | | 2035001354 | MERCEDES | C Class (203) (2000>2003) |
| 817850 | | 64509122825 | BMW | 5 series E60 |
| 817851 | | 64509122827 | BMW | 5 series E60 |
| 817852 | | 1850083 | OPEL | Signum |
| 817853 | | 1850084 | OPEL | Signum |
| 817854 | | 0384G9 | CITROEN | C5 (2004>2007) |

| Valeo | | OE | | |
|---|---|---|---|---|
| 817861 | | 60686738 | ALFA ROMEO | 156 (2003>) |
| 817862 | | 51715999 | ALFA ROMEO | 147 (2000>2004) |
| 817865 | | 4B0145805A | AUDI | A6 (2001>2004) |
| 817867 | | 8E0145805N | AUDI | A4 (2000>2004) |
| 817869 | | 8E0145805P | AUDI | A4 (2000>2004) |
| 817870 | | 8E0145806C | AUDI | A4 (2000>2004) |
| 817872 | | 8Z0145805B | AUDI | A2 |
| 817873 | | 17512243345 | BMW | 5 series E34 |
| 817874 | | 17512246795 | BMW | 3 series E46 |
| 817875 | | 17512245512 | BMW | 3 series E36 |
| 817876 | | 17512246031 | BMW | 5 series E39 |
| 817877 | | 17512247359 | BMW | 5 series E39 |
| 817879 | | 46745841 | FIAT | Stilo (2001>2004) |
| 817881 | | 46440215 | FIAT | Brava |
| 817882 | | 46836770 | FIAT | Idea (2003>2007) |
| | | 46836770 | LANCIA | Musa (2004>2006) |
| 817888 | | 1227171 | FORD | Focus (2001>2003) |
| 817891 | | 4522847 | FORD | Transit (2000>) |
| 817901 | | 46444726 | LANCIA | Lybra |
| 817905 | | 2105001300 | MERCEDES | E Class (210) |
| 817907 | | 2105002000 | MERCEDES | E Class (210) |
| 817911 | | 2105002100 | MERCEDES | E Class (210) |
| 817916 | | 1302413 | OPEL | Astra G (98>) |
| | | 9192587 | VAUXHALL | Astra IV (98>) |
| 817923 | | 8200252209 | RENAULT | Clio II (2001>) |
| 817924 | | 7701045349 | RENAULT | Espace III (96>2000) |
| 817925 | | 6025312322 | RENAULT | Avantime |
| 817926 | | 8200008761 | RENAULT | Espace IV (2002>2006) |
| 817927 | | 8200075810 | RENAULT | Espace IV (2002>2006) |
| 817931 | | 00003007V005000000 | MCC | Fortwo (98>2006) |
| 817936 | | 1109138 | FORD | Galaxy (2000>) |
| | | 7M0145805 | SEAT | Alhambra |
| | | 7M0145805 | VOLKSWAGEN | Sharan (95>2000) |
| 817937 | | 701145805A | VOLKSWAGEN | Transporter (F70) (90>96) |
| 817941 | | 93822907 | IVECO | Daily (89>96) |
| 817994 | | 9065010101 | MERCEDES | Sprinter II (2006>) |
| 817997 | | 4B0260403S | AUDI | A6 (97>2001) |
| 817998 | | 6302066 | OPEL | Signum B (2005>) |
| | | 12800599 | SAAB | 9-3 (2002>) |
| | | 12800599 | VAUXHALL | Vectra (2005>) |
| 817999 | | 8200471888 | RENAULT | Clio III (2005>) |
| 818000 | | 6455CH | PEUGEOT | 206 |
| 818001 | | 6455CJ | PEUGEOT | 206 |
| 818002 | | 8200325004 | RENAULT | Megane II |
| 818003 | | 2115001154 | MERCEDES | CLS (2004>2010) |
| 818004 | | 1108838 | FORD | Galaxy (2000>) |
| 818005 | | 51767143 | FIAT | Panda (2003>) |
| 818006 | | 46799862 | FIAT | Punto II (99>2003) |
| 818007 | | 46547675 | FIAT | Multipla (98>2003) |

| Valeo | | OE | | |
|---|---|---|---|---|
| 818008 | | 7701045346 | RENAULT | Laguna (98>2000) |
| 818009 | | 46527737 | FIAT | Brava |
| 818013 | | 6455EF | CITROEN | C1 |
| 818014 | | 6455EE | CITROEN | C1 |
| 818015 | | 6455EK | CITROEN | C3 (2002>2005) |
| 818017 | | 46821270 | FIAT | Punto II (99>2003) |
| 818018 | | 6455CG | CITROEN | Jumper (2002>) |
| 818019 | | 46532988 | FIAT | Brava |
| 818020 | | 51708909 | FIAT | Idea |
| 818021 | | 46820833 | FIAT | Idea |
| 818023 | | C2S5302 | JAGUAR | X-Type |
| 818024 | | 55036473 | JEEP | Grand Cherokee (93>99) |
| 818025 | | JRB100790 | LAND ROVER | Discovery (98>2004) |
| 818027 | | 6025313367 | RENAULT | Avantime |
| 818028 | | 6025310510 | RENAULT | Espace III (96>2000) |
| 818029 | | 6025313325 | RENAULT | Espace III (96>2000) |
| 818030 | | 6025306732 | RENAULT | Espace III (96>2000) |
| 818031 | | JRB100190 | ROVER | 200 (89>95) |
| 818032 | | 8846044350 | TOYOTA | Picnic (96>2001) |
| 818033 | | 81619200018 | MAN | TG-A |
| 818034 | | 9425000054 | MERCEDES | Actros 1996 |
| 818035 | | 9705000054 | MERCEDES | Atego I |
| 818036 | | 99487944 | IVECO | Daily (99>) |
| 818037 | | 504022601 | IVECO | Daily (99>) |
| 818038 | | 8189330 | IVECO TRUCKS | Eurocargo |
| 818039 | | 8157212 | VOLVO TRUCKS | FL |
| 818040 | | 81619200012 | MAN | F 2000 |
| 818041 | | 81619206011 | MAN | F 90 |
| 818042 | | 81619206018 | MAN | F 90 |
| 818043 | | 81619200011 | MAN | L 2000 |
| 818044 | | 81619206026 | MAN | M 2000 |
| 818046 | | 1335552 | FORD | Focus (2004>) |
| 818047 | | 1850073 | OPEL | Astra G (98>) |
| 818050 | | 4041973 | FORD | Transit (2000>) |
| 818070 | | 80110S10003 | HONDA | CR-V (97>2002) |
| 818081 | | MB813733 | MITSUBISHI | Galant (92>96) |
| 818084 | | B01A61480 | MAZDA | 323 (BA) (94>96) |
| 818085 | | GE4T61480B | MAZDA | 626 (GF) (97>99) |
| 818086 | | BK2K61480B | MAZDA | 323 (BJ) (98>2000) |
| 818087 | | B25F61480B | MAZDA | 323 (BJ) (98>2000) |
| 818088 | | BJ3A61480C | MAZDA | 323 (BJ) (98>2000) |
| 818090 | | GJYA6148ZA | MAZDA | 6 (2002>2005) |
| 818092 | | C10061480 | MAZDA | Premacy (99>2001) |
| 818101 | | 73210AC050 | SUBARU | Legacy (94>97) |
| 818103 | | 8846035090 | TOYOTA | 4 Runner (130) |
| 818104 | | 8846020470 | TOYOTA | Celica (93>99) |
| 818105 | | 8846044030 | TOYOTA | Picnic (96>2001) |
| 818107 | | 8846012480 | TOYOTA | Corolla (110) (97>99) |
| 818114 | | 1850098 | OPEL | Astra H (2004>) |

| Valeo | | OE | | |
|---|---|---|---|---|
| 818116 | | 504080822 | IVECO TRUCKS | Eurocargo Tector Restyling (2003>) |
| 818118 | | 1850089 | OPEL | Corsa C (2000>2003) |
| 818162 | | 51782753 | FIAT | Panda (2003>) |
| 818165 | | 8200443897 | RENAULT | Clio III (2005>) |
| 818166 | | 8200468911 | RENAULT | Clio III (2005>) |
| 818168 | | 1850111 | OPEL | Astra H (2004>) |
| 818170 | | 6455GK | CITROEN | C4 |
| 818171 | | 6455CX | CITROEN | C4 |
| 818172 | | 5010315372 | RENAULT TRUCKS | Magnum |
| 818173 | | 9065000054 | MERCEDES | Sprinter (2006>) |
| 818175 | | 12804660 | SAAB | 9-3 (2002>) |
| 818187 | | 60694767 | ALFA ROMEO | 159 |
| 818190 | | 8E0260403R | AUDI | A4 (2004>) |
| 818191 | | 6455T3 | CITROEN | Jumper (94>2001) |
| 818192 | | 55700408 | FIAT | Bravo II (2007>) |
| 818193 | | 6455GA | CITROEN | Nemo |
| 818194 | | 1334653 | FORD | Fiesta (2005>) |
| 818195 | | 1363775 | FORD | Fiesta (2005>) |
| 818205 | | 1698300761 | MERCEDES | A Class (169) (2004>) |
| 818213 | | 1K0145803F | AUDI | A3 (2003>2008) |
| | | 1K0145803F | SEAT | Altea |
| | | 1K0145803Q | SKODA | Octavia (2004>) |
| | | 1K0145803Q | VOLKSWAGEN | Golf Plus (2005>) |
| 818225 | | 4164696 | FORD | Transit (2006>) |
| 818226 | | 0384N9 | PEUGEOT | 308 |
| 818227 | | 1440Q9 | CITROEN | C5 (2008>) |
| 818229 | | 51718679 | FIAT | Albea |
| 818239 | | 1429406 | FORD | Mondeo III (2007>) |
| 818240 | | 1433631 | FORD | Galaxy CA1 (2006>) |
| 818241 | | 1722905 | FORD | Fiesta (2008>) |
| 818244 | | 0384P5 | CITROEN | C5 (2008>) |
| 818245 | | 1674066 | FORD | Focus II FL |
| 818246 | | 1429405 | FORD | Focus II (2007>) |
| 818249 | | LR009802 | LAND ROVER | Freelander 2 (2006>) |
| 818250 | | 144613211R | RENAULT | TWINGO III (FL) |
| 818251 | | 144618748R | RENAULT | CLIO III |
| 818252 | | 17517823570 | BMW | X3 (2010>) |
| 818253 | | 17517593845 | BMW | X3 (2010>) |
| 818254 | | 17517823571 | BMW | X3 (2010>) |
| 818259 | | 17517600530 | BMW | 1 series F20 |
| 818260 | | 17517600531 | BMW | 1 series F20 |
| 818263 | | 17517618809 | BMW | 1 series F20 |
| 818264 | | 14461EM00A | NISSAN | Tiida (C11X) (2007>) |
| 818272 | | 7H0145804B | VOLKSWAGEN | Transporter (7J/7H)(2003>2009) |
| 818273 | | 17517795823 | BMW | 5 series E60 |
| 818276 | | 2045000500 | MERCEDES | C Class (204) (2007>) |
| 818701 | | 6302048 | OPEL | Signum |
| | | 13108570 | VAUXHALL | Signum (2003>2005) |
| 818711 | | 46849068 | FIAT | Doblo (2004>2005) |



• **New** Nouveau **Nuevo** Novo **Nuovo** Nieuw **Neu** Nowość **Yeni** Новый N **Novy**

| Valeo | | OE | | |
|---|---|---|---|---|
| 818712 | | 51718953 | FIAT | Doblo (2000>2003) |
| 818713 | | 11651515368 | MINI | MINI (2001>) |
| 818714 | | 17517788755 | MINI | MINI (2001>) |
| 818715 | | 17517793370 | BMW | 3 series E46 |
| 818716 | | 17517786351 | BMW | 3 series E46 |
| 818717 | | 1353523 | FORD | Focus C-Max (2007>) |
| 818720 | | 3B0145805H | SKODA | Superb |
| | | 3B0145805H | VOLKSWAGEN | Passat (2000>) |
| 818721 | | 51749913 | FIAT | Croma II (2005>2007) |
| 818722 | | 51770417 | FIAT | Croma II (2005>2007) |
| | | 6302065 | OPEL | Signum B (2005>) |
| | | 13205149 | VAUXHALL | Signum (2003>2005) |
| 818724 | | 504084140 | IVECO | Daily (2006>) |
| 818726 | | 46831804 | FIAT | Idea (2003>2007) |
| 818727 | | 8200115540 | RENAULT | Mégane II |
| 818728 | | 1302113 | OPEL | Corsa C (2000>2003) |
| 818730 | | 0002490V007000000 | MCC | Fortwo (98>2006) |
| 818732 | | 2E0145804 | VOLKSWAGEN | Crafter |
| 818757 | | 8E0145805S | AUDI | A4 (2000>2004) |
| 818769 | | 0384K0 | CITROEN | C4 |
| | | 0384K0 | PEUGEOT | 307 (2005>) |
| 818771 | | 4416946 | OPEL | Vivaro (2006>) |
| | | 8200411160 | RENAULT | Trafic II (2006>) |
| | | 93854162 | VAUXHALL | Vivaro (2006>) |
| 818772 | | 8200301884 | RENAULT | Espace IV FL (2006>) |
| 818794 | | 60692222 | ALFA ROMEO | 159 |
| 818795 | | 1K0145803E | AUDI | A3 (2003>2008) |
| | | 1K0145803A | SEAT | Altea |
| | | 1K0145803S | SKODA | Octavia (2004>) |
| | | 1K0145803S | VOLKSWAGEN | Eos |
| 818796 | | 17517787446 | BMW | 5 series E60 |
| 818797 | | 1337624 | FORD | Fiesta (2002>2005) |
| 818800 | | 4522532 | FORD | Transit (2000>) |
| 818802 | | 4522846 | FORD | Transit (2000>) |
| 818806 | | 1695000000 | MERCEDES | A Class (169) (2004>2008) |
| 818807 | | 6395010301 | MERCEDES | Viano |
| 818808 | | 6395010201 | MERCEDES | Viano |
| 818809 | | 1300410 | OPEL | Corsa C (2003>) |
| | | 93177425 | VAUXHALL | Corsa II (2003>) |
| 818814 | | 95511080300 | PORSCHE | Cayenne |
| | | 7L0145803A | VOLKSWAGEN | Touareg (2002>2006) |
| 818815 | | 95511080400 | PORSCHE | Cayenne |
| | | 7L0145804A | VOLKSWAGEN | Touareg (2002>2006) |
| 818817 | | 12804713 | SAAB | 9-3 (2002>) |
| 818818 | | 12765753 | SAAB | 9-3 (2002>) |
| 818820 | | 8200221885 | RENAULT | Kangoo (2003>) |
| 818822 | | 0384H1 | PEUGEOT | 206 |
| 818823 | | 55702237 | FIAT | Grande Punto |
| 818824 | | 55700635 | FIAT | Grande Punto |

| Valeo | | OE | | |
|---|---|---|---|---|
| 818825 | | 8E0145806F | AUDI | A4 (2000>2004) |
| 818826 | | FTP8030 | LAND ROVER | Defender 90 - 110 |
| 818827 | | 059145805 | AUDI | A4 (94>98) |
| | | 059145805 | SKODA | Superb |
| | | 059145805 | VOLKSWAGEN | Passat (2000>) |
| 818828 | | 059145806 | AUDI | A4 (94>98) |
| | | 059145806 | VOLKSWAGEN | Passat (2000>) |
| 818829 | | 6Q0145804G | SEAT | Cordoba (2002>) |
| | | 6Q0145804G | SKODA | Fabia II (2007>) |
| 818830 | | 51782907 | FIAT | Croma II (2005>2007) |
| 818835 | | 8200369311 | RENAULT | Twingo III (2007>) |
| 818836 | | 0384K5 | PEUGEOT | 308 |
| 818837 | | 0384L4 | CITROEN | Berlingo (B9) (2008>) |
| | | 0384L4 | PEUGEOT | 308 |
| 818838 | | 03C145749B | AUDI | A3 (2003>2008) |
| | | 03C145749B | SEAT | Altea |
| | | 03C145749B | SKODA | Superb II (2008>) |
| | | 03C145749B | VOLKSWAGEN | Golf VI (2008>) |
| 818840 | | 12773072 | SAAB | 9-3 (2002>) |
| 818841 | | 1440H9 | PEUGEOT | 308 |
| 818852 | | 144619U21A | NISSAN | Note (2005>2007) |
| 818853 | | 0384K8 | CITROEN | C5 (2008>) |
| 818866 | | 0384L9 | CITROEN | Berlingo (B9) (2008>) |
| | | 0384L9 | PEUGEOT | Partner (B9) (2008>) |
| 818869 | | 144960023R | RENAULT | Scenic III |
| 818870 | | 144960022R | RENAULT | Mégane III (2009>) |
| 818878 | | 144960006R | RENAULT | Mégane III (2009>) |
| 818891 | | 0384H0 | CITROEN | C5 (2004>2007) |
| 818892 | | 0384H4 | CITROEN | C8 |
| | | 0384H4 | PEUGEOT | 807 |
| 818895 | | 0384J8 | PEUGEOT | 607 (2004>) |
| 818898 | | 1K0145803T | SKODA | Octavia (2004>) |
| | | 1K0145803T | VOLKSWAGEN | Golf V (2003>) |
| 818899 | | 1K0145803G | SEAT | Octavia (2004>) |
| | | 1K0145803G | SKODA | Octavia (2004>) |
| | | 3C0145805P | VOLKSWAGEN | Passat CC |
| | | 3C0145805P | VOLKSWAGEN | Tiguan |
| 818984 | | 3981637 | VOLVO TRUCKS | FM-Series |
| 818985 | | 41214450 | IVECO TRUCKS | Stralis |
| 818986 | | 1629115 | DAF | XF95-Series |
| 818987 | | 3980841 | VOLVO TRUCKS | FH12-Series |
| 818988 | | 1446258 | SCANIA | Series -P,G,R,T |
| 819123 | | 1640063120 | TOYOTA | Camry (82>86) |
| 819151 | | 1417980 | FORD | Capri III |
| 819176 | | 6160271 | FORD | Transit (86>91) |
| 819193 | | 19010PM4004 | HONDA | Civic III (87>91) |
| 819201 | | 2015002903 | MERCEDES | 200/300 (124) |
| 819219 | | 2140005A00 | NISSAN | Cherry (N12) (82>86) |
| 819240 | | 6078971 | FORD | Capri II |

| Valeo | | OE | | |
|---|---|---|---|---|
| 819259 | | 811121253F | AUDI | 80 (81>86) |
| 819260 | | 893121251 | AUDI | 80 (81>86) |
| 819320 | | 6065788 | FORD | Transit (78>85) |
| 819368 | | 2015004603 | MERCEDES | 200/300 (124) |
| 819376 | | 1245002403 | MERCEDES | 200/300 (124) |
| 819377 | | 1245009003 | MERCEDES | E Class (124) |
| 819378 | | 1265013303 | MERCEDES | S Class (126) |
| 819379 | | 1265003503 | MERCEDES | 200/300 (123) |
| 819383 | | 2015005303 | MERCEDES | 190 (201) |
| 819387 | | 1245009803 | MERCEDES | E Class (124) |
| 819388 | | 1300051 | OPEL | Corsa A (82>93) |
| | | 90298560 | VAUXHALL | Nova |
| 819389 | | 1300081 | OPEL | Corsa A (82>93) |
| 819395 | | 17111707563 | BMW | 3 series E30 |
| 819397 | | 17111712823 | BMW | 3 series E30 |
| 819412 | | 17111737760 | BMW | 5 series E34 |
| 819413 | | 17111719309 | BMW | 5 series E34 |
| 819414 | | 17111178215 | BMW | 5 series E28 |
| 819418 | | 17112242138 | BMW | 5 series E34 |
| 819428 | | 96001830 | CITROEN | XM (89>94) |
| | | 1301C4 | PEUGEOT | 605 (89>94) |
| 819431 | | 6025107990 | RENAULT | Espace II (91>96) |
| 881769 | | 37H7216 | ROVER | Mini |
| 883053 | | 7585721 | FIAT | Panda |
| | | SE141117000A | SEAT | Marbella |
| 883282 | | 7701349387 | RENAULT | R5 |
| 883428 | | 5882355 | FIAT | 127 |
| 883463 | | 7701348798 | RENAULT | R4 |
| 883464 | | 95606691 | CITROEN | Visa |
| 883468 | | 75515461 | CITROEN | Visa |
| 883520 | | 75513460 | CITROEN | CX |
| 883674 | | 644854 | PEUGEOT | 505 |
| 883715 | | 95606692 | CITROEN | Visa |
| 883720 | | 321121253BM | VOLKSWAGEN | Derby (81>84) |
| 883727 | | 1L0121253P | SEAT | Toledo (91>98) |
| | | 321121253AL | VOLKSWAGEN | Golf I (74>83) |
| 883729 | | 7700725010 | RENAULT | R11 |
| 883737 | | 644855 | PEUGEOT | 504 |
| 883739 | | 7704000112 | RENAULT | Trafic (80>2001) |
| 883751 | | 1302189 | OPEL | Ascona C (81>88) |
| | | 90128036 | VAUXHALL | Astra I (80>84) |
| 883764 | | 130551 | CITROEN | C25 (81>90) |
| | | 5969174 | FIAT | Ducato (81>94) |
| | | 130551 | PEUGEOT | J5 |
| 883765 | | 7707251 | ALFA ROMEO | AR6 |
| | | ZF05931556 | CITROEN | C25 (81>90) |
| | | 7707251 | FIAT | Ducato (81>94) |
| | | 1300F7 | PEUGEOT | J5 |
| 883767 | | 1302014 | OPEL | Corsa A (82>93) |

| Valeo | | OE | | |
|---|---|---|---|---|
| 883767... | | 90136828 | VAUXHALL | Nova |
| 883771 | | 1302015 | OPEL | Ascona C (81>88) |
| | | 90136753 | VAUXHALL | Nova |
| 883773 | | 95495038 | CITROEN | BX |
| 883774 | | 95495037 | CITROEN | BX |
| 883787 | | 93802646 | ALFA ROMEO | AR8 |
| | | 93807802 | IVECO | Daily (78>89) |
| 883790 | | 7701027078 | RENAULT | Super 5 |
| 883799 | | 82397785 | AUTOBIANCHI | A112 |
| 883806 | | 7566876 | FIAT | Regata |
| 883811 | | 7739938 | FIAT | Uno (83>89) |
| 883812 | | 7739942 | FIAT | Uno (83>89) |
| 883813 | | 7739937 | FIAT | Uno (83>89) |
| 883818 | | 867121253F | SEAT | Terra |
| | | 867121253E | VOLKSWAGEN | Derby (81>84) |
| 883819 | | 171121253CJ | VOLKSWAGEN | Derby (81>84) |
| 883820 | | 191121253L | VOLKSWAGEN | Corrado |
| 883825 | | 7678729 | FIAT | Uno (83>89) |
| 883849 | | 191121253 | VOLKSWAGEN | Golf II (83>91) |
| 883851 | | 7700757854 | RENAULT | Espace (84>91) |
| 883852 | | 7700757930 | RENAULT | Super 5 |
| 883856 | | 1302049 | OPEL | Kadett E (84>91) |
| 883857 | | 1302074 | OPEL | Kadett E (84>91) |
| | | 90180560 | VAUXHALL | Astra II (84>91) |
| 883858 | | 1302077 | OPEL | Kadett E (84>91) |
| | | 90180561 | VAUXHALL | Belmont |
| 883860 | | 1245004903 | MERCEDES | E Class (124) |
| 883863 | | 893121251F | AUDI | 4000 |
| 883864 | | 321121253BQ | VOLKSWAGEN | Passat (73>82) |
| 883866 | | 96011831 | CITROEN | AX (86>91) |
| 883869 | | 353121253AA | VOLKSWAGEN | Passat (88>93) |
| 883870 | | 353121253AC | VOLKSWAGEN | Passat (88>93) |
| 883871 | | 353121253F | VOLKSWAGEN | Passat (88>93) |
| 883875 | | 7701034769 | RENAULT | Clio (90>98) |
| 883876 | | 2015001903 | MERCEDES | 190 (201) |
| 883877 | | 90264491 | OPEL | Vectra A (88>95) |
| | | 90264491 | VAUXHALL | Cavalier III (88>95) |
| 883878 | | 1300088 | OPEL | Vectra A (88>95) |
| | | 90323474 | VAUXHALL | Cavalier III (88>95) |
| 883880 | | 1302057 | OPEL | Kadett E (84>91) |
| | | 90351829 | VAUXHALL | Astra II (84>91) |
| 883881 | | 1300100 | OPEL | Kadett E (84>91) |
| | | 90352138 | VAUXHALL | Astra II (84>91) |
| 883920 | | 1300016 | OPEL | Ascona C (81>88) |
| | | 90298318 | VAUXHALL | Nova |
| 883921 | | SE021117002C | SEAT | Ibiza (84>93) |
| 883954 | | 6122462 | FORD | Fiesta (76>83) |
| 883956 | | 6134546 | FORD | Fiesta (83>89) |
| 883958 | | SE021117002A | SEAT | Ibiza (84>93) |



• **New** Nouveau **Nuevo** Novo **Nuovo** Nieuw **Neu** Nowość **Yeni** Новый N **Novy**

| Valeo | | OE | | |
|---|---|---|---|---|
| **883959** | | 7702146438 | **RENAULT** | R11 |
| **883965** | | 6448G2 | **PEUGEOT** | 205 |
| **883976** | | 644877 | **PEUGEOT** | 405 (87>96) |
| **883982** | | 64111384725 | **BMW** | 5 series E34 |

| Valeo | | OE | |
|---|---|---|---|

## 696001 MF1079

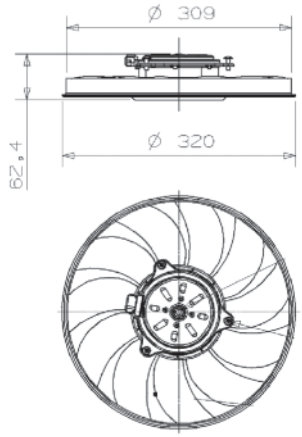


| | | |
|---|---|---|
| OPEL 1341365<br>VAUXHALL 24418347 | 220 W | |

## 696012 FS1456 320 & 380MM

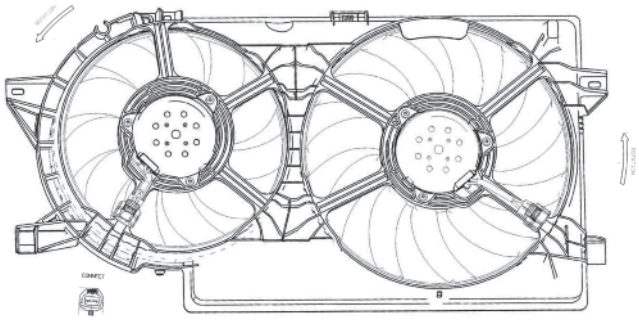

| | | |
|---|---|---|
| CHRYSLER 5142995AA | M1:350<br>M2:430 W<br>3050<br>2700rpm | |

## 696002 MF1085

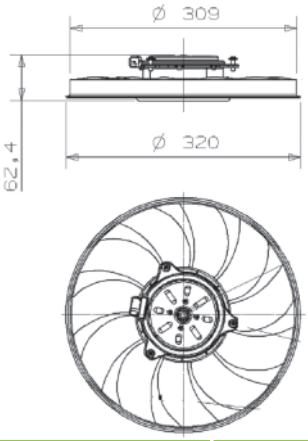


| | | |
|---|---|---|
| SAAB 12801550 | 220 W | |

## 696013

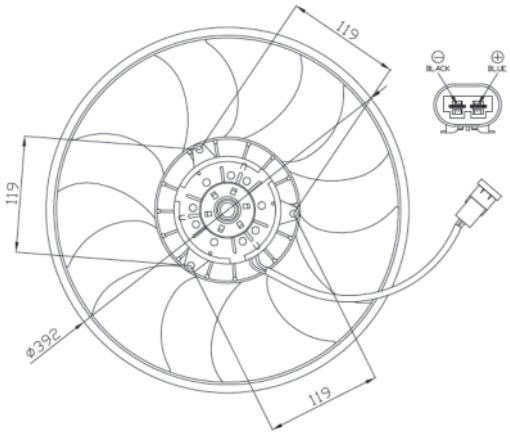


| | | |
|---|---|---|
| RENAULT 7701070217 | 320 W<br>2525 rpm | |

## 696003 MF1086

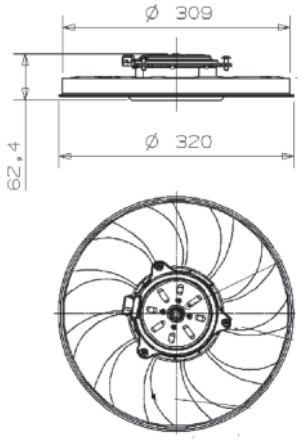


| | | |
|---|---|---|
| SAAB 12801549 | 250 W | |

## 696017 MF1126

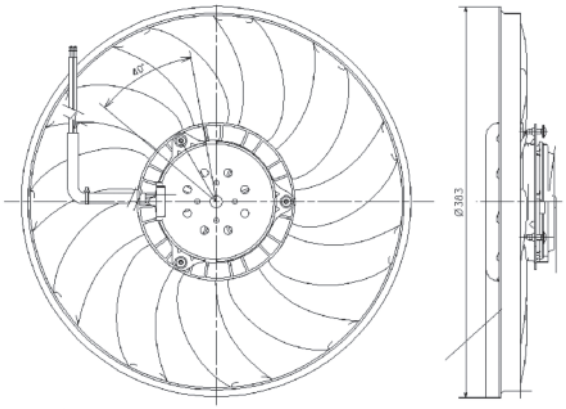


| | | |
|---|---|---|
| AUDI 4F0959455 | 400 W | |

## 696018 MF1125

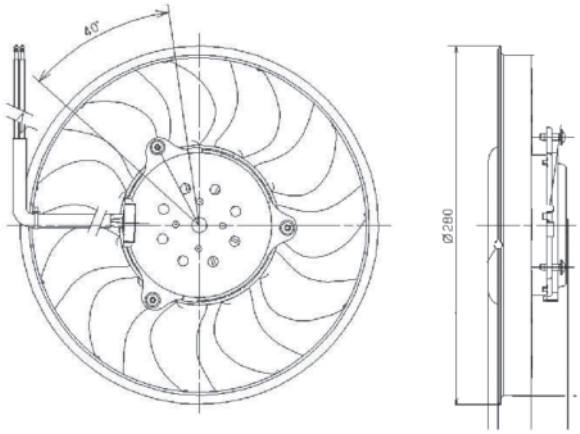


| | | | |
|---|---|---|---|
| AUDI | 4F0959455A | 200 W | |

## 696019 MF1077

Picture not available
Image non disponible
Imagen no disponible
Immagine non disponibile
Nicht verfügbares Bild
Brak zdjęcia
Картина недоступна

| | | | |
|---|---|---|---|
| SEAT | 6Q0959455AF | | |
| SKODA | 6Q0959455AF | | |
| VOLKSWAGEN | 6Q0959455AF | | |

## 696020 FS1220 320 & 320MM

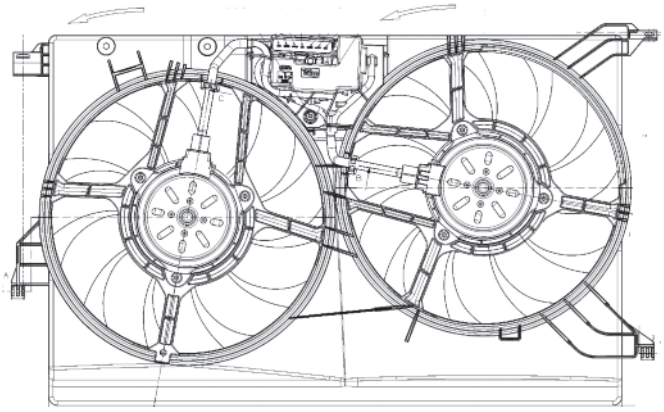

| | | | |
|---|---|---|---|
| FIAT | 51770406 | M1:270 W<br>M2:180 W<br>2520<br>2230rpm | |

## 696022 FS1443

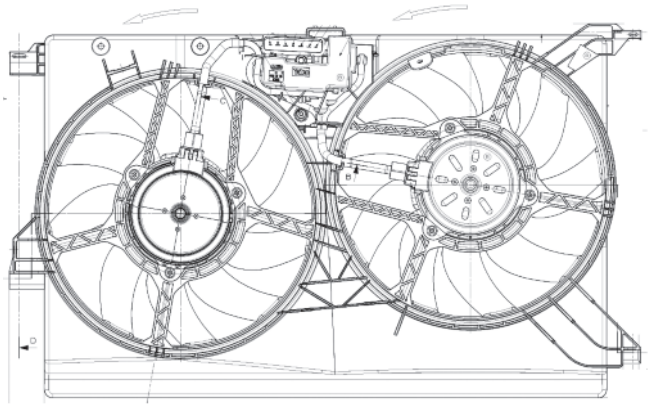

| | | | |
|---|---|---|---|
| FIAT | 51770418 | | |

## 696023 FS1554 320 & 320MM

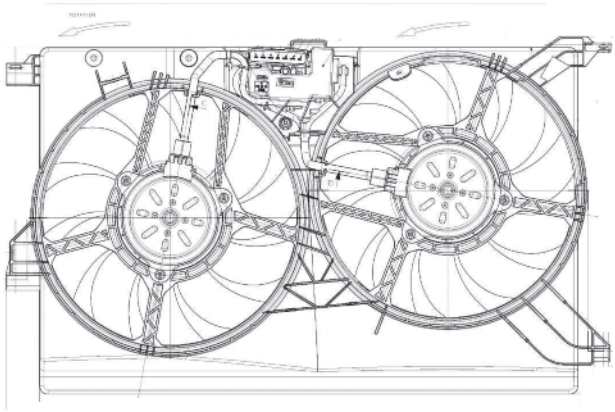

| | | | |
|---|---|---|---|
| FIAT | 51770412 | M1:270<br>M2:180 W<br>2520<br>2230rpm | |

## 696024 MF1078

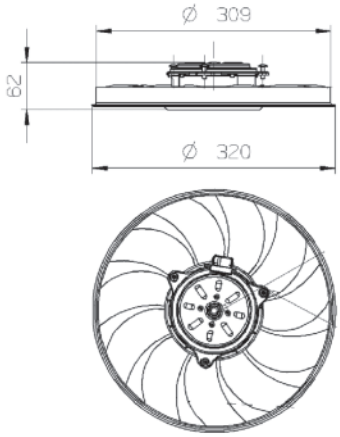


| | | | |
|---|---|---|---|
| OPEL | 1341364 | 300 W | |
| VAUXHALL | 24418346 | | |

## 696025 MF1029

Picture not available
Image non disponible
Imagen no disponible
Immagine non disponibile
Nicht verfügbares Bild
Brak zdjęcia
Картина недоступна

| | | | |
|---|---|---|---|
| OPEL | 1341366 | | |
| VAUXHALL | 24419326 | | |

## 696028 MF1075

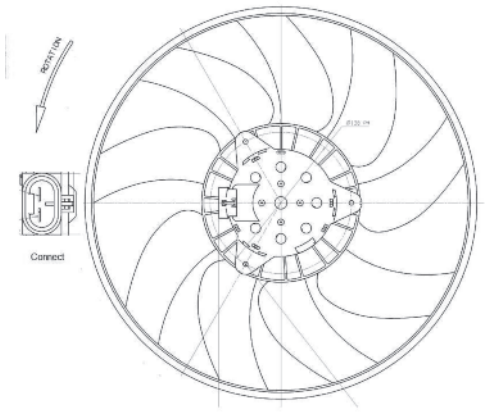


| | | | |
|---|---|---|---|
| OPEL | 1341370 | 450 | |
| VAUXHALL | 24453597 | | |
| | | 3900 rpm | |

## 696026 MF1083

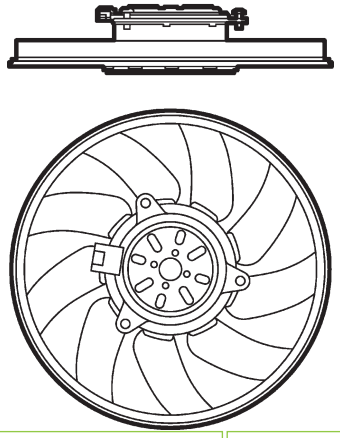

| | | | |
|---|---|---|---|
| OPEL | 1341368 | | |
| SAAB | 13114368 | | |
| VAUXHALL | 13114368 | | |

## 696029 MF1076

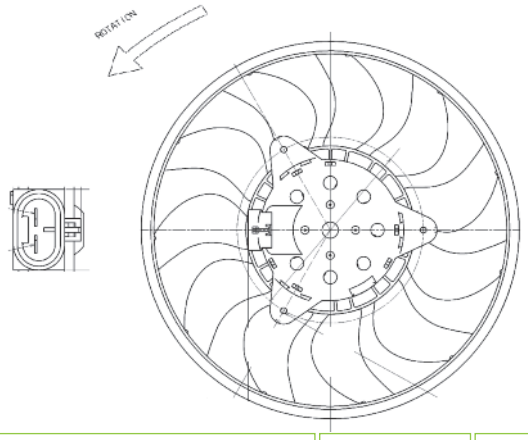


| | | | |
|---|---|---|---|
| OPEL | 1341371 | 570 | |
| VAUXHALL | 24453598 | | |
| | | 2600 rpm | |

## 696027 MF1084

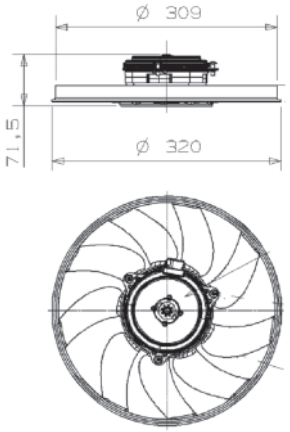


| | | | |
|---|---|---|---|
| OPEL | 1341369 | 350 W | |
| SAAB | 13114369 | | |
| VAUXHALL | 13114369 | | |

## 696030 MF1089

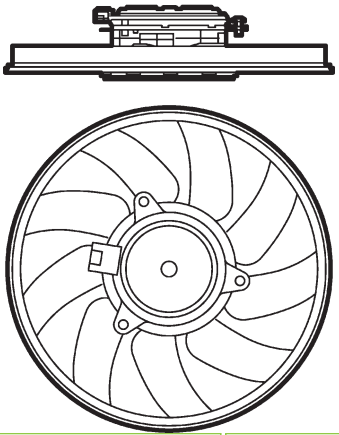

| | | | |
|---|---|---|---|
| OPEL | 1341383 | | |
| SAAB | 13182322 | | |
| VAUXHALL | 13182322 | | |

## 696031

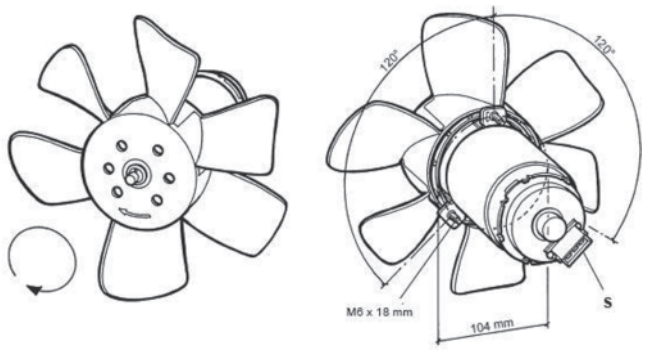


| | | | |
|---|---|---|---|
| AUDI | 165959455L | 100/60 W | |
| SEAT | 165959455L | | |
| VOLKSWAGEN | 165959455L | | |
| | | 1950/1450 rpm | |

## 696038

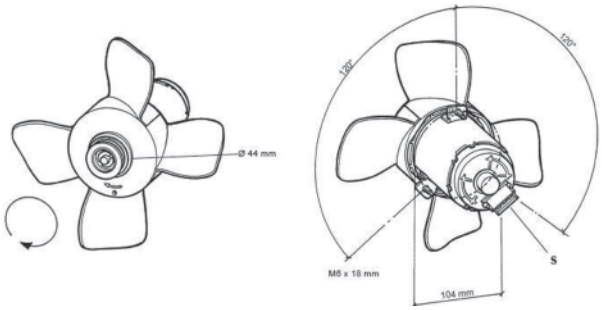


| | | | |
|---|---|---|---|
| AUDI | 327959455A | 150/80 W | |
| VOLKSWAGEN | 327959455A | | |
| | | 2400/1600 rpm | |

## 696032

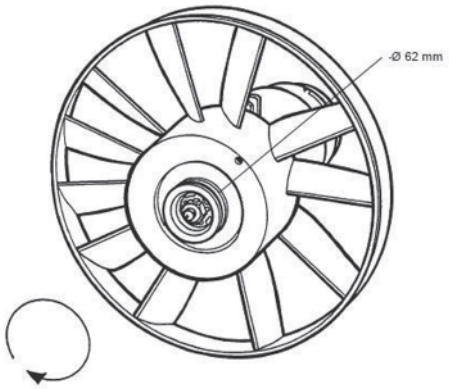


| | | | |
|---|---|---|---|
| VOLKSWAGEN | 1H0959455AD | 350/250/150 W | |
| | | 2800/2500/1800 rpm | |

## 696039

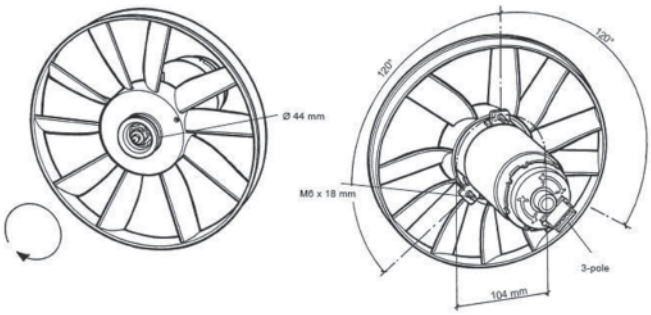


| | | | |
|---|---|---|---|
| SEAT | 357959455F | 250/80 W | |
| VOLKSWAGEN | 357959455F | | |
| | | 2830/1650 rpm | |

## 696035

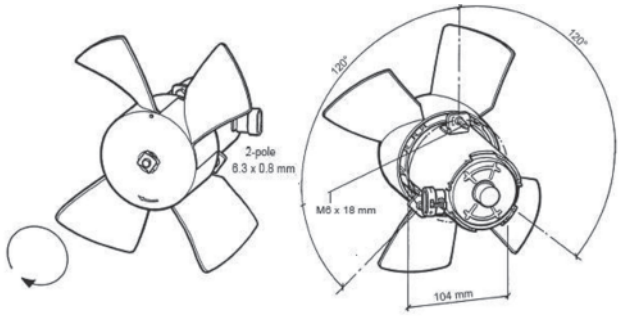


| | | | |
|---|---|---|---|
| OPEL | 1341244 | 150 W | |
| VAUXHALL | 22061461 | | |
| | | 2600 rpm | |

## 696041

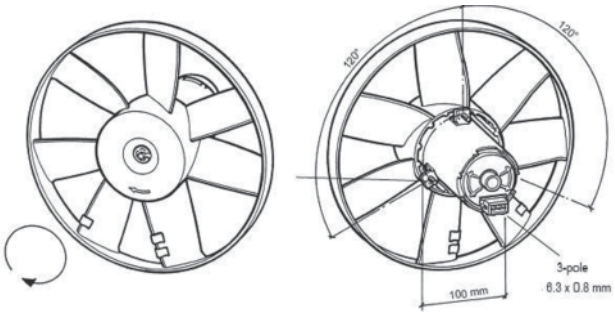


| | | | |
|---|---|---|---|
| FORD | 7223405 | 240/85 W | |
| SEAT | 6N0959455D | | |
| VOLKSWAGEN | 6N0959455D | | |
| | | 2600/1600 rpm | |

## 696042

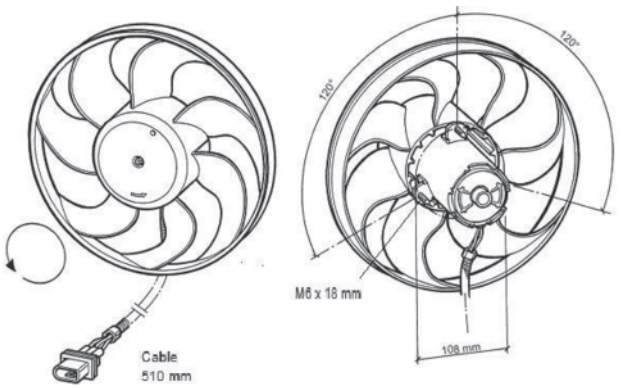


| | | | |
|---|---|---|---|
| AUDI | 6X0959455A | 250/150 W | |
| SEAT | 6X0959455F | | |
| SKODA | 6X0959455A | | |
| VOLKSWAGEN | 6X0959455F | | |
| | | 2600/1600 rpm | |

## 696058

| | | | |
|---|---|---|---|
| BMW | 64541392913 | 280/125 W | |
| | | 2105/1325 rpm | |

## 696043

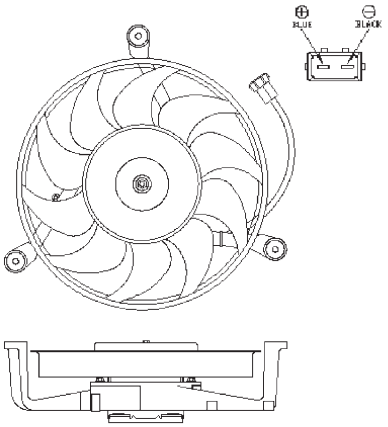


| | | | |
|---|---|---|---|
| VOLKSWAGEN | 701959455AM | 205 W | |
| | | 2625 rpm | |

## 696062 280 MM

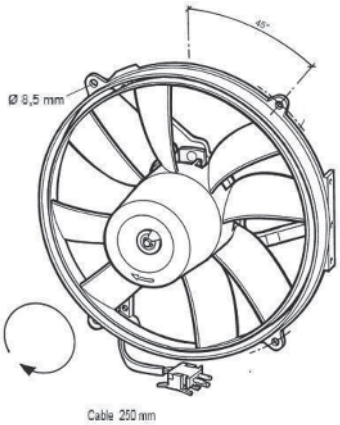


| | | | |
|---|---|---|---|
| MERCEDES | 0015001293 | | |
| | | 3000 rpm | |

## 696056

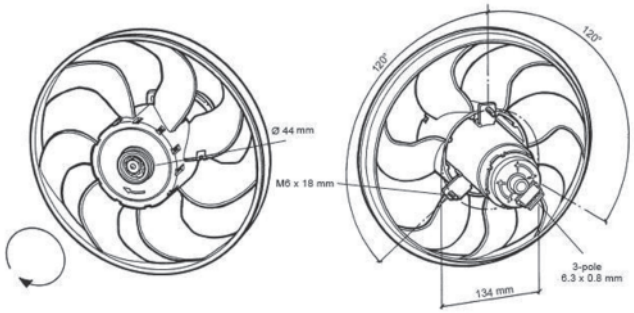


| | | | |
|---|---|---|---|
| VOLKSWAGEN | 3A0959455B | 250/80 W | |
| | | 2635/1250 rpm | |

## 696063 280 MM

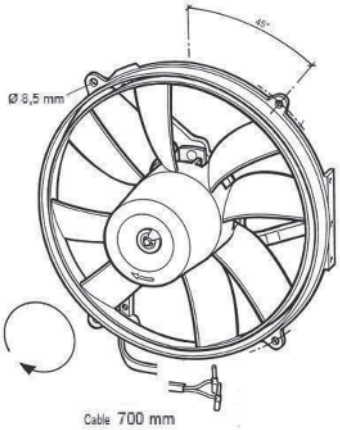


| | | | |
|---|---|---|---|
| MERCEDES | 0015001393 | | |
| | | 3000 rpm | |

## 696069

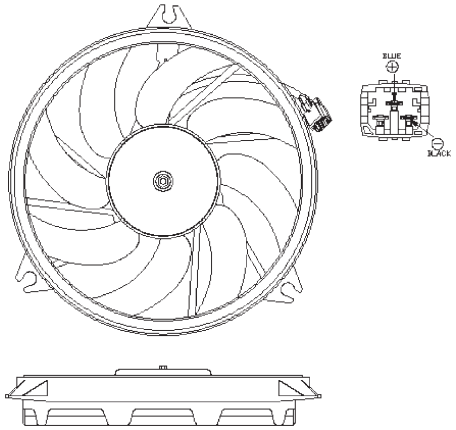


| | | |
|---|---|---|
| PEUGEOT 1253C5 | 125 W | |
| | 1890 rpm | |

## 696073

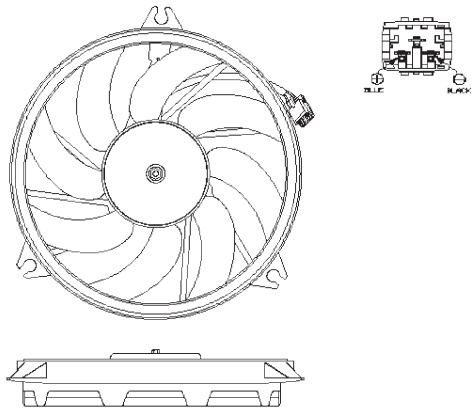


| | | |
|---|---|---|
| PEUGEOT 125391 | 125 W | |
| | 1900 rpm | |

## 696070

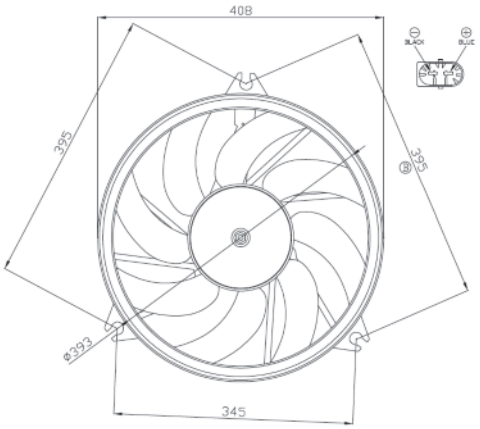


| | | |
|---|---|---|
| PEUGEOT 1253C7 | 220 W | |
| | 2250 rpm | |

## 696074

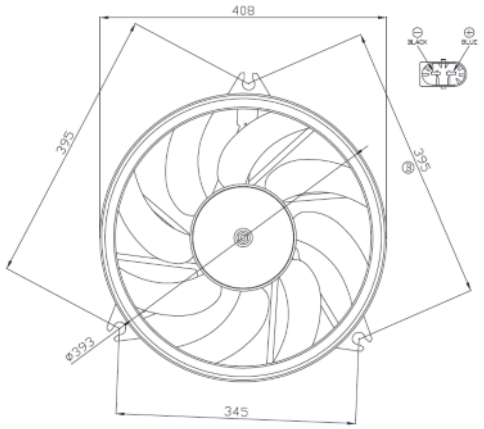


| | | |
|---|---|---|
| PEUGEOT 125392 | 220 W | |
| | 2250 rpm | |

## 696071

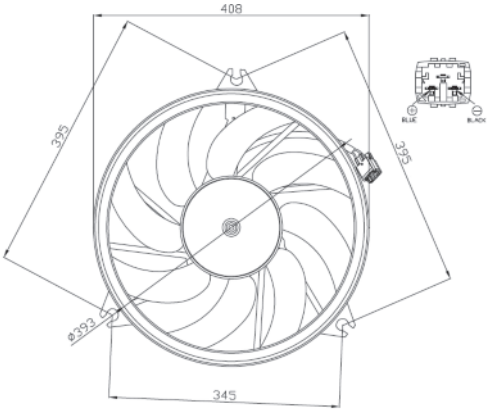


| | | |
|---|---|---|
| PEUGEOT 1253C9 | 125 W | |
| | 1890 rpm | |

## 696078

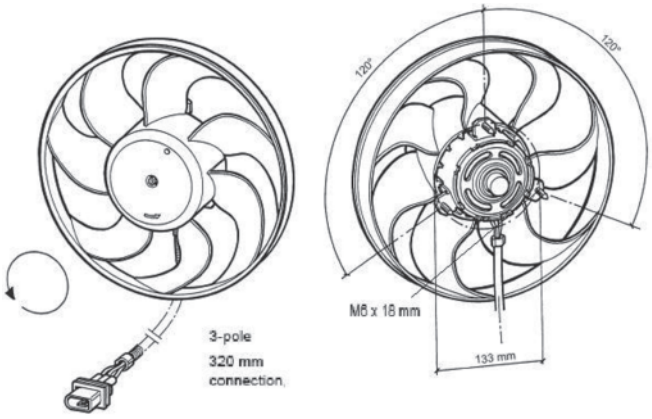


| | | |
|---|---|---|
| SEAT 6X0959455C<br>SKODA 6X0959455C<br>VOLKSWAGEN 6X0959455C | 210 / 160 W | |
| | 2600/1500 rpm | |

## 696079 MF1087

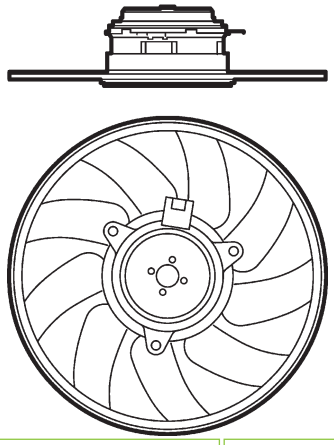

| | | | |
|---|---|---|---|
| SAAB | 13167336 | | |
| VAUXHALL | 13167336 | | |

## 696082 MF1129

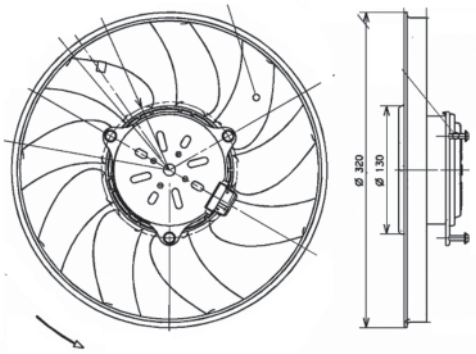


| | | | |
|---|---|---|---|
| MERCEDES | 9065000393 | 310 W | |
| VOLKSWAGEN | 2E0959455 | | |
| | | 2750 rpm | |

## 696080 MF1088

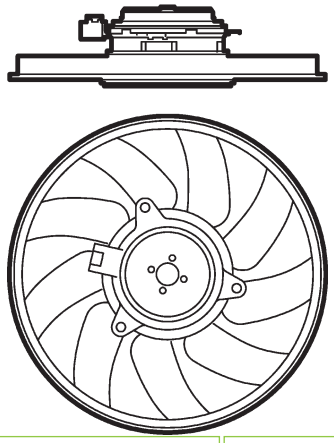

| | | | |
|---|---|---|---|
| OPEL | 1341380 | | |
| SAAB | 13167337 | | |
| VAUXHALL | 13167337 | | |

## 696083 MF1130

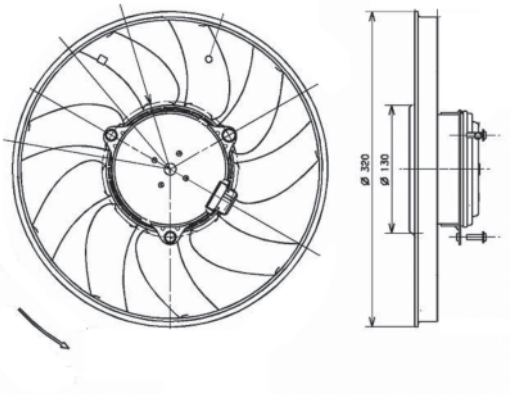


| | | | |
|---|---|---|---|
| MERCEDES | 9065000493 | 350 W | |
| VOLKSWAGEN | 2E0959455A | | |
| | | 3100 rpm | |

## 696081 FS1434

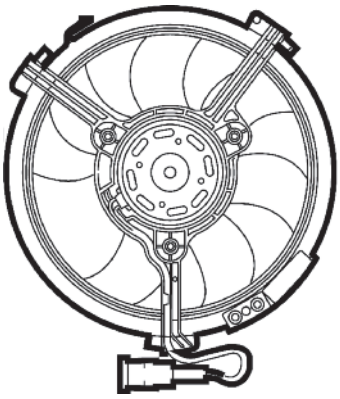

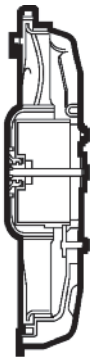

| | | | |
|---|---|---|---|
| RENAULT | 7701208196 | | |

## 696085 FS1455 320 & 320MM

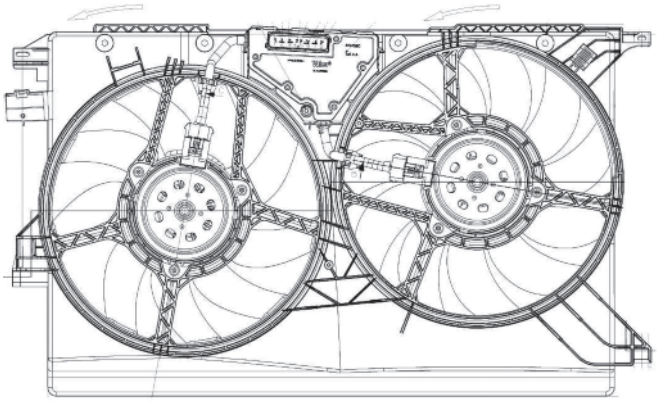

| | | | |
|---|---|---|---|
| FIAT | 71740487 | M1:480 | |
| | | M2:480 | |
| | | 3500 rpm | |

## 696091 FS1572

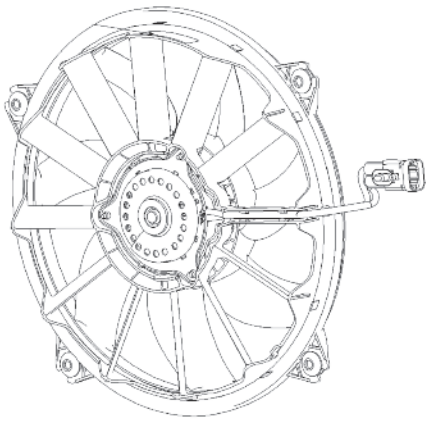

| | | |
|---|---|---|
| CITROEN 1253K2<br>PEUGEOT 1253K4 | 500 W<br>2900 rpm | |

## 696100

Picture not available
Image non disponible
Imagen no disponible
Immagine non disponibile
Nicht verfügbares Bild
Brak zdjęcia
Картина недоступна

| | | |
|---|---|---|
| FIAT 46559851 | | |

## 696095

Picture not available
Image non disponible
Imagen no disponible
Immagine non disponibile
Nicht verfügbares Bild
Brak zdjęcia
Картина недоступна

| | | |
|---|---|---|
| FIAT 46542852<br>LANCIA 46542854 | | |

## 696101

Picture not available
Image non disponible
Imagen no disponible
Immagine non disponibile
Nicht verfügbares Bild
Brak zdjęcia
Картина недоступна

| | | |
|---|---|---|
| CITROEN<br>FIAT<br>PEUGEOT | | |

## 696098

Picture not available
Image non disponible
Imagen no disponible
Immagine non disponibile
Nicht verfügbares Bild
Brak zdjęcia
Картина недоступна

| | | |
|---|---|---|
| FIAT 46550400 | | |

## 696104

Picture not available
Image non disponible
Imagen no disponible
Immagine non disponibile
Nicht verfügbares Bild
Brak zdjęcia
Картина недоступна

| | | |
|---|---|---|
| FIAT 51738360<br>LANCIA 51708405 | | |

## 696106

Picture not available
Image non disponible
Imagen no disponible
Immagine non disponibile
Nicht verfügbares Bild
Brak zdjęcia
Картина недоступна

| | |
|---|---|
| FIAT | 51738357 |
| LANCIA | 46745045 |

## 696111

Picture not available
Image non disponible
Imagen no disponible
Immagine non disponibile
Nicht verfügbares Bild
Brak zdjęcia
Картина недоступна

| | |
|---|---|
| ALFA ROMEO | 60657849 |

## 696108

Picture not available
Image non disponible
Imagen no disponible
Immagine non disponibile
Nicht verfügbares Bild
Brak zdjęcia
Картина недоступна

| | |
|---|---|
| ALFA ROMEO | 51702461 |

## 696113

Picture not available
Image non disponible
Imagen no disponible
Immagine non disponibile
Nicht verfügbares Bild
Brak zdjęcia
Картина недоступна

| | |
|---|---|
| ALFA ROMEO | 60694104 |

## 696109

Picture not available
Image non disponible
Imagen no disponible
Immagine non disponibile
Nicht verfügbares Bild
Brak zdjęcia
Картина недоступна

| | |
|---|---|
| ALFA ROMEO | 60692418 |

## 696118 415 MM

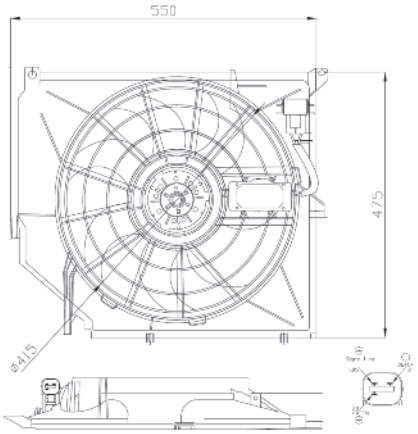


| | |
|---|---|
| BMW | 17117525508 |

970 / 2400
rpm

## 696119

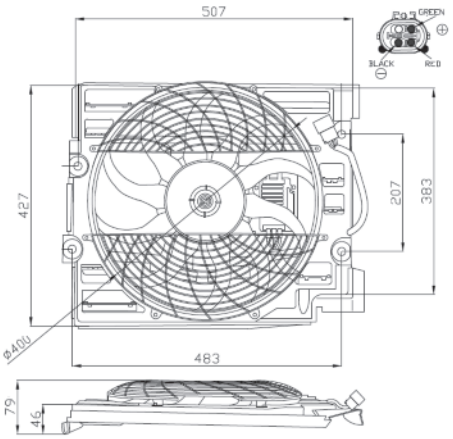


| | | |
|---|---|---|
| BMW 64546922555 | | |
| | 980/2430 rpm | |

## 696123 390 MM

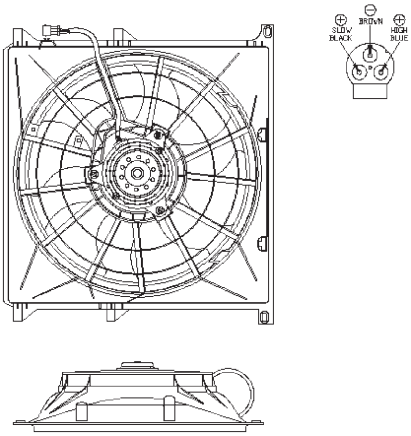


| | | |
|---|---|---|
| BMW 64508372039 | | |
| | 2350 / 1630 rpm | |

## 696120 400 MM

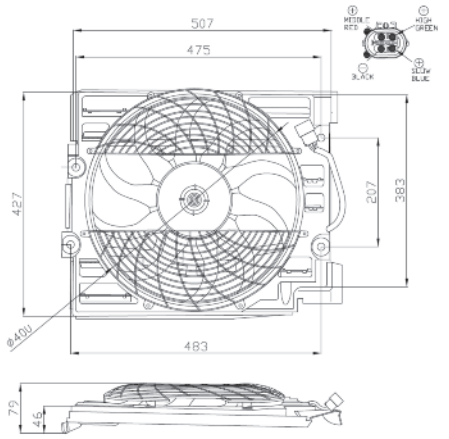


| | | |
|---|---|---|
| BMW 64548380780 | | |
| | 1400 / 1940 / 2490 rpm | |

## 696129 365 MM

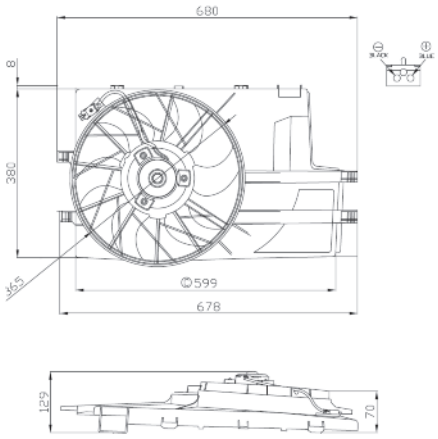


| | | |
|---|---|---|
| MERCEDES 1685000293 | | |
| | 1970 rpm | |

## 696121 415 MM

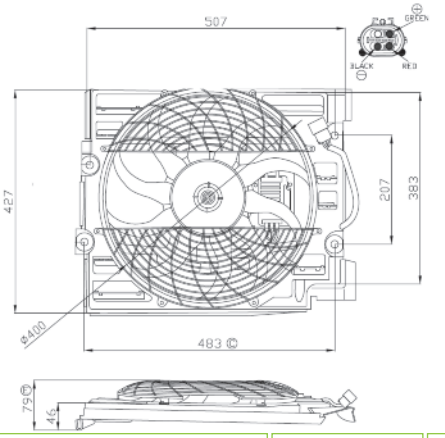


| | | |
|---|---|---|
| BMW 64546921395 | M1:390 W | |
| | 830 / 2400 rpm | |

## 696130 365 MM

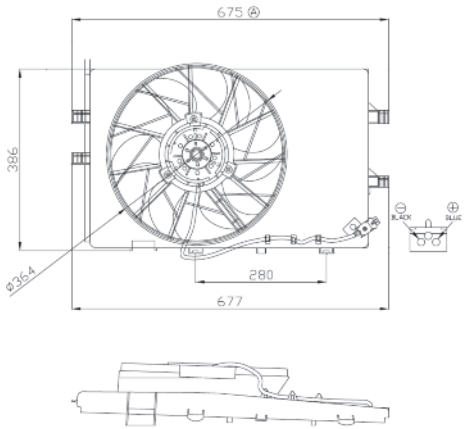


| | | |
|---|---|---|
| MERCEDES 1685000593 | | |
| | 2840 rpm | |

## 696132

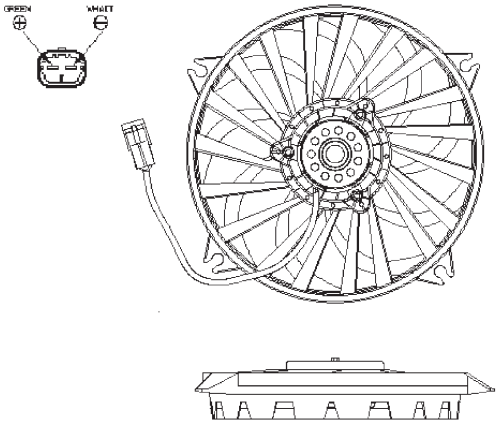


| | | |
|---|---|---|
| CITROEN 1253K1<br>FIAT 1400821280<br>LANCIA 9635494380<br>PEUGEOT 1253K1 | 350 W | |
| | 2000<br>rpm | |

## 696135

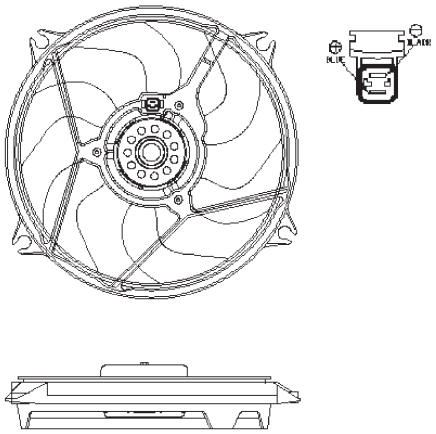


| | | |
|---|---|---|
| CITROEN 125390 | 300 W | |
| | 2000<br>rpm | |

## 696133

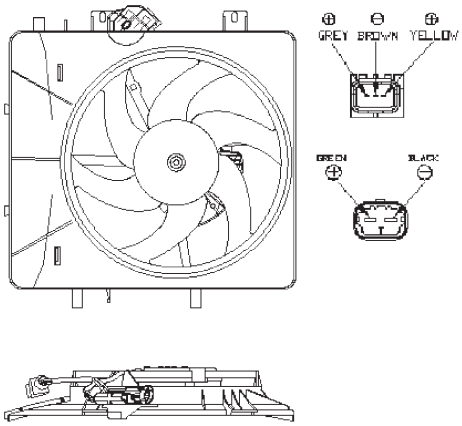


| | | |
|---|---|---|
| CITROEN 1253C6 | 175 / 45 W | |
| | 2685 / 1250<br>rpm | |

## 696136

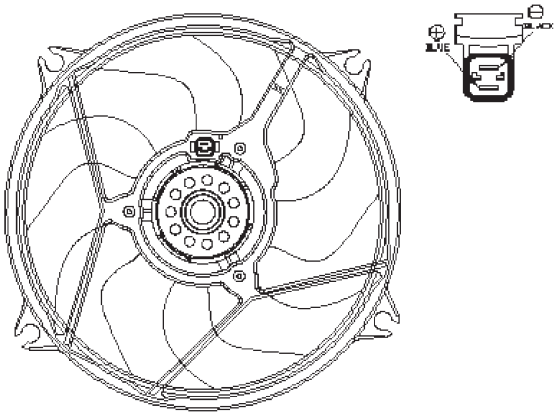


| | | |
|---|---|---|
| CITROEN 125395 | 400 W | |
| | 2260<br>rpm | |

## 696134

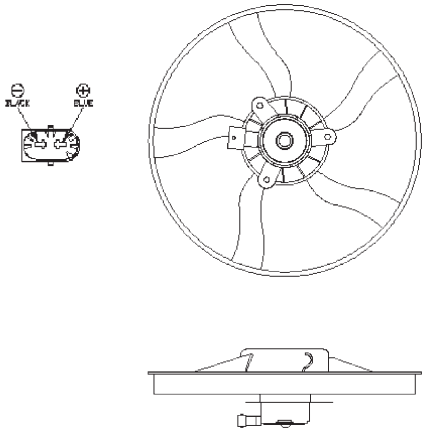


| | | |
|---|---|---|
| CITROEN 125396 | 90 W | |
| | 1890 rpm | |

## 696137

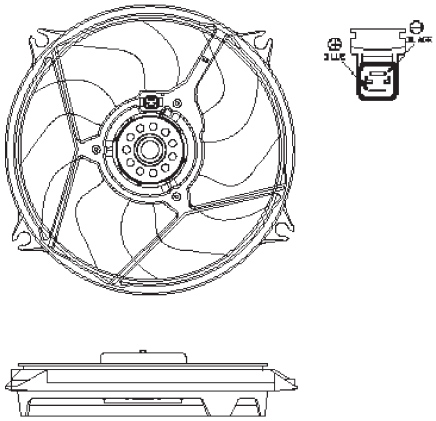


| | | |
|---|---|---|
| CITROEN 1253C8<br>PEUGEOT 1253C8 | 340 W | |
| | 2450<br>rpm | |

## 696138

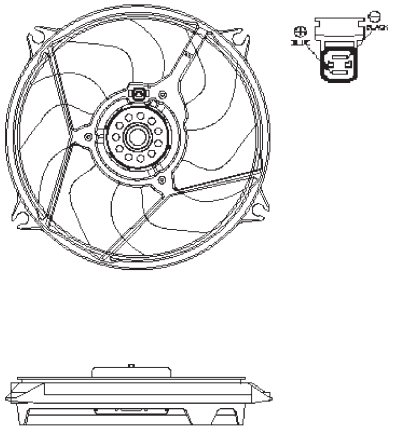


| | | |
|---|---|---|
| CITROEN 1250F8<br>PEUGEOT 1250F8 | 500 W | |
| | 2450<br>rpm | |

## 696141

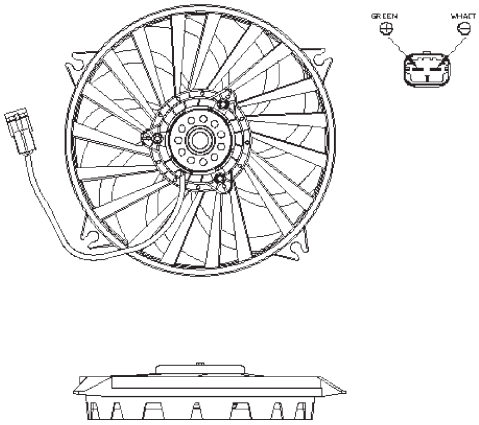


| | | |
|---|---|---|
| CITROEN 1250G1 | 200 W | |
| | 1740 rpm | |

## 696139

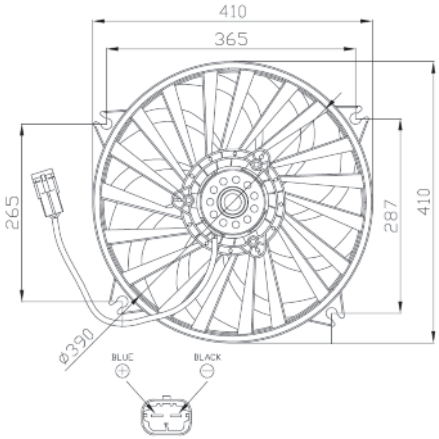


| | | |
|---|---|---|
| CITROEN 1250G5<br>FIAT 9635466180<br>LANCIA 9635466180<br>PEUGEOT 1250G5 | 260 W | |
| | 2040<br>rpm | |

## 696142

Picture not available
Image non disponible
Imagen no disponible
Immagine non disponibile
Nicht verfügbares Bild
Brak zdjęcia
Картина недоступна

| | | |
|---|---|---|
| CITROEN 1250G7<br>PEUGEOT 1250G7 | | |
| | | |

## 696140

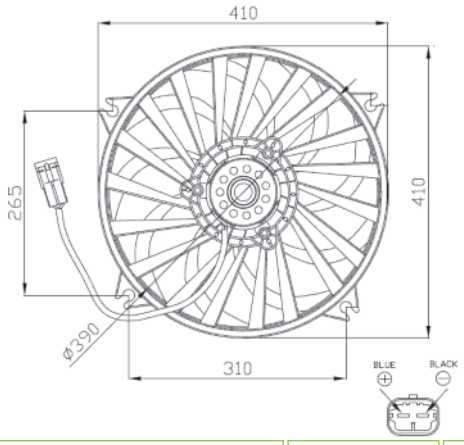


| | | |
|---|---|---|
| CITROEN 1250G4 | 260 W | |
| | 2040<br>rpm | |

## 696149 300 & 300MM

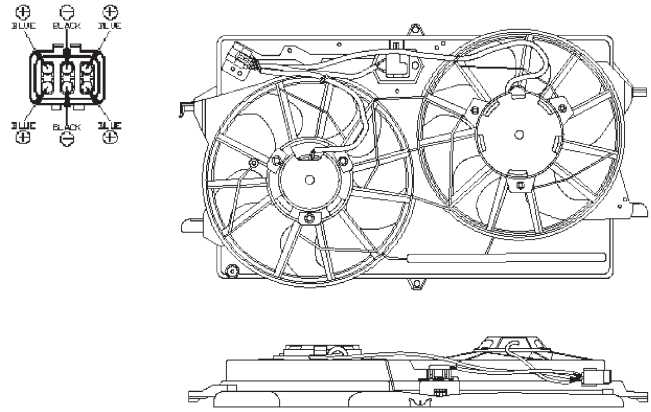


| | | |
|---|---|---|
| FORD 1107126 | M1:110 W<br>M2:190 W | |
| | 2500<br>3000rpm | |

## 696150 — 300 & 300MM

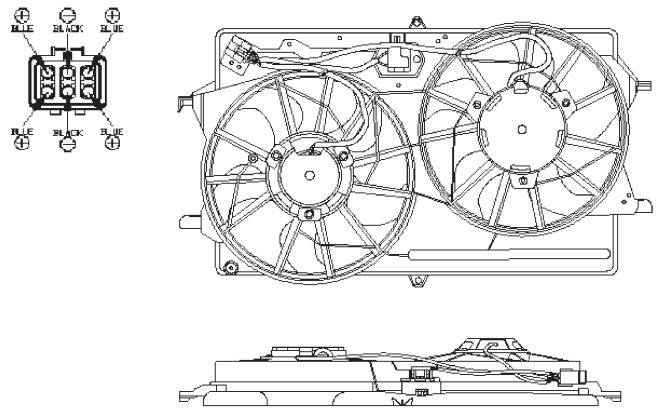


| | | |
|---|---|---|
| FORD 1075126 | M1:110 W<br>M2:200 W | |
| | 2660<br>3200rpm | |

## 696153 — 300 & 300MM

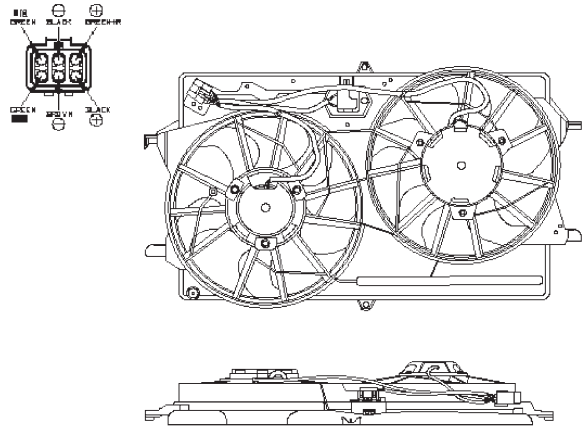


| | | |
|---|---|---|
| FORD 1075132 | M1:110 W<br>M2:130 W | |
| | 2410<br>2680rpm | |

## 696151 — 375 MM

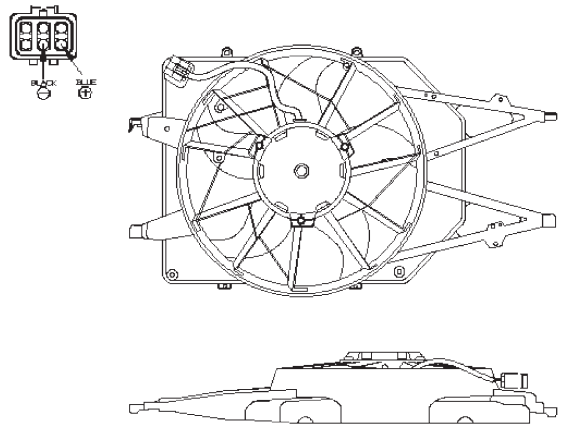


| | | |
|---|---|---|
| FORD 1075127 | | |
| | 2300<br>rpm | |

## 696154 — 300 & 300MM

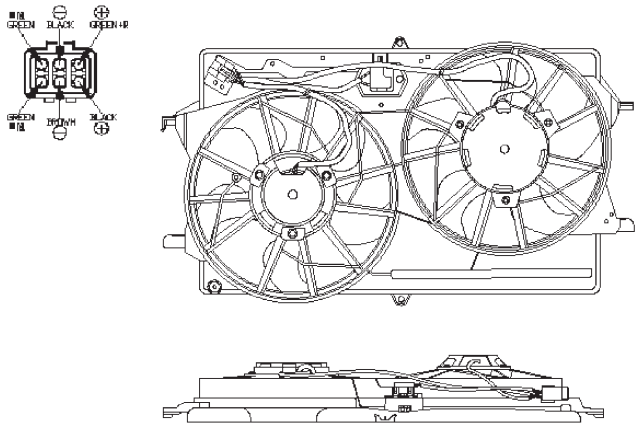


| | | |
|---|---|---|
| FORD 1075130 | M1:90 W<br>M2:90 W | |
| | 110<br>100rpm | |

## 696152 — 375 MM

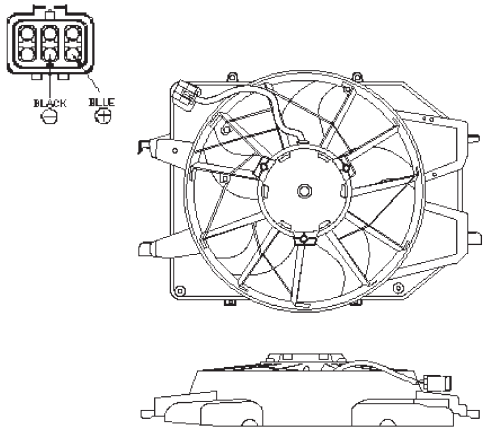


| | | |
|---|---|---|
| FORD 1075135 | | |
| | 2350<br>rpm | |

## 696157 — 320 MM

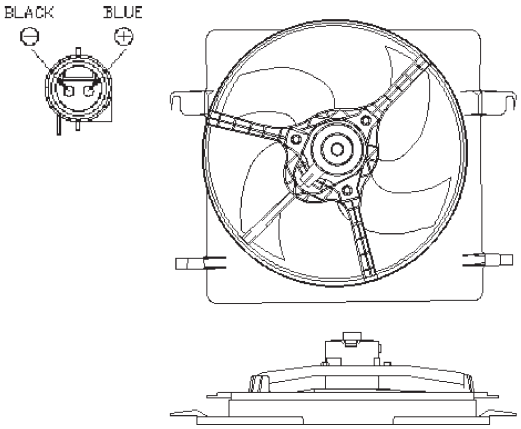


| | | |
|---|---|---|
| FORD 1088845 | | |
| | 1930 rpm | |

## 696158 — 365 MM

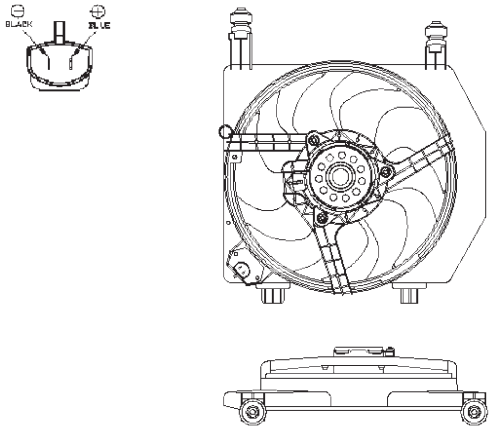


| | | |
|---|---|---|
| FORD 1020914 | | |
| | 2200 rpm | |

## 696172 — 280 MM

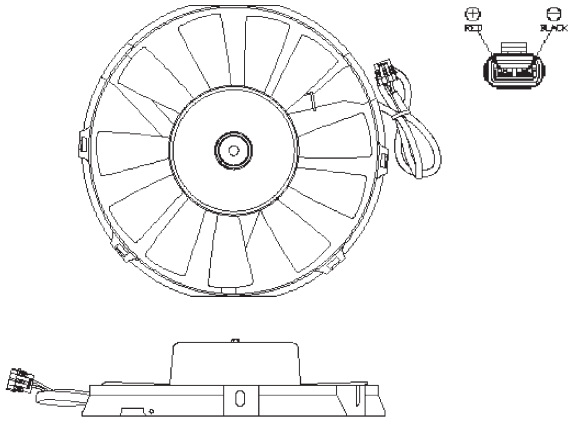


| | | |
|---|---|---|
| OPEL 1845039<br>VAUXHALL 90510210 | M1:90 W | |
| | 2340 rpm | |

## 696159 — 365& MM

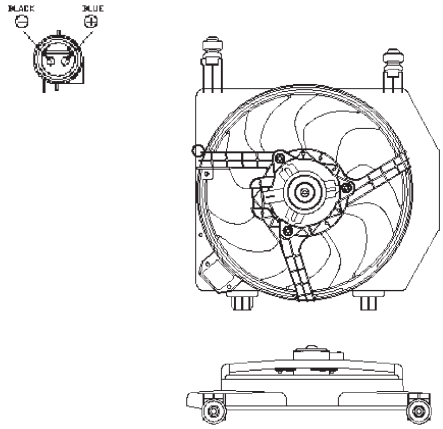


| | | |
|---|---|---|
| FORD 1020917 | | |
| | 1300 rpm | |

## 696173

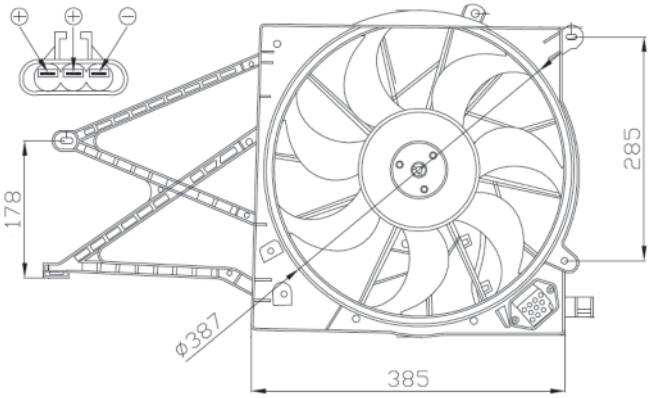


| | | |
|---|---|---|
| OPEL 1341344<br>VAUXHALL 90570739 | 215 / 140 W | |
| | 2220 / 1760 rpm | |

## 696160 — 365 MM

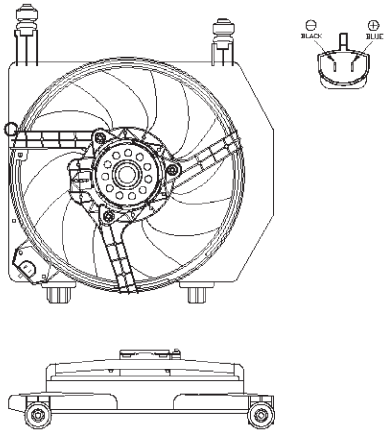


| | | |
|---|---|---|
| FORD 1020254 | | |
| | 2220 rpm | |

## 696174

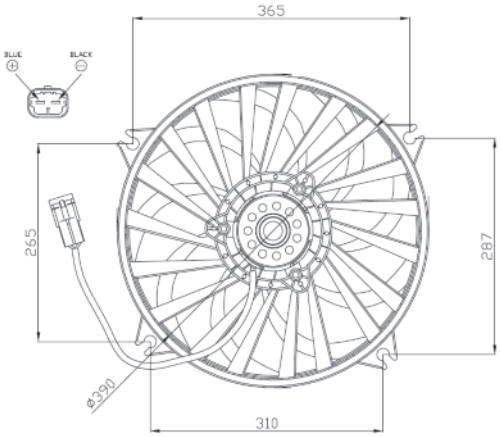


| | | |
|---|---|---|
| PEUGEOT 1250G0 | 350 | |
| | 2160 rpm | |

## 696177

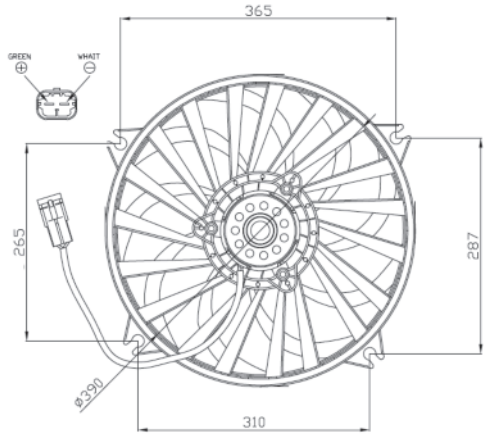


| | | |
|---|---|---|
| CITROEN 1253A9<br>PEUGEOT 1253A9 | 330 W | |
| | 2130<br>rpm | |

## 696189

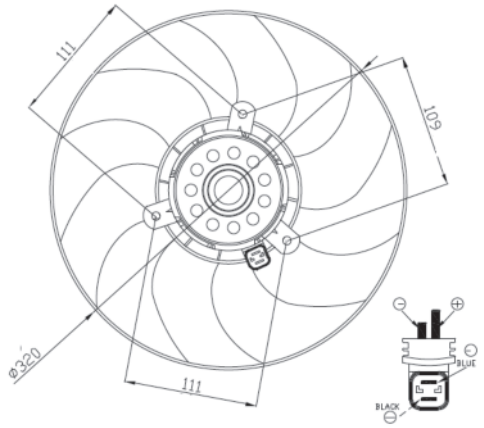


| | | |
|---|---|---|
| PEUGEOT 125378 | 180 W | |
| | 2650<br>rpm | |

## 696179

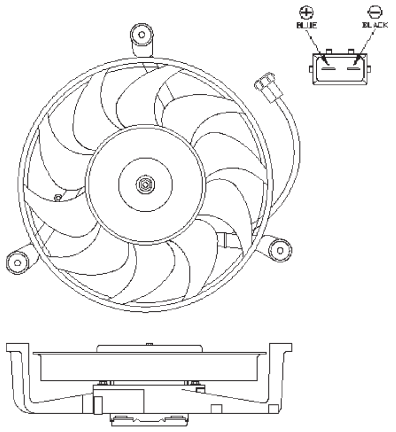


| | | |
|---|---|---|
| VOLKSWAGEN 701959455J | 200 | |
| | 2620<br>rpm | |

## 696190

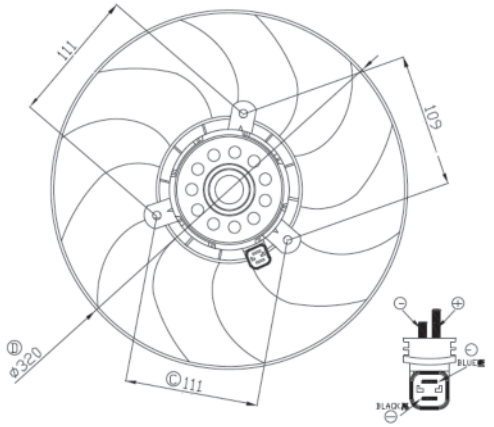


| | | |
|---|---|---|
| CITROEN 1253A3<br>PEUGEOT 1253A3 | 180 W | |
| | 2650<br>rpm | |

## 696188

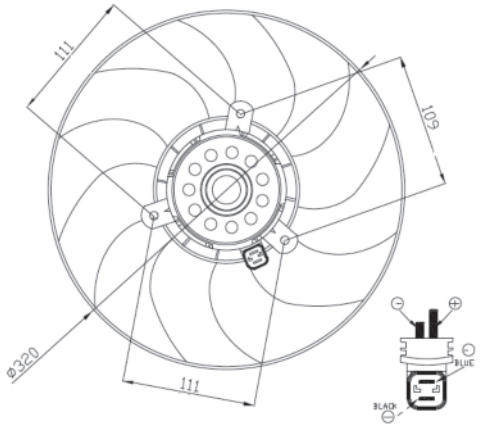


| | | |
|---|---|---|
| CITROEN 125361<br>PEUGEOT 125361 | 180 W | |
| | 2650<br>rpm | |

## 696191

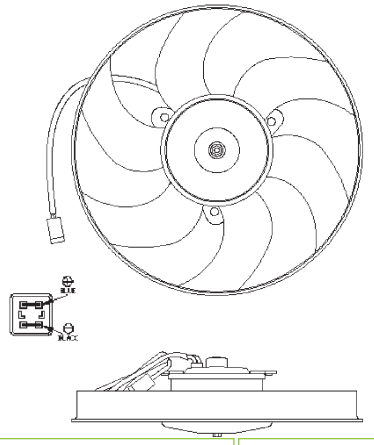


| | | |
|---|---|---|
| PEUGEOT 125377 | 160 W | |
| | 2100<br>rpm | |

## 696196

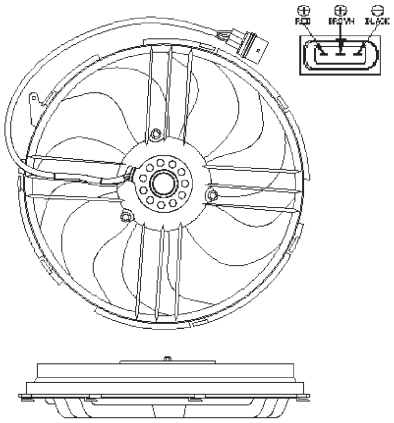


| | | |
|---|---|---|
| SEAT 6N0959453P<br>VOLKSWAGEN 6N0959453P | 290 / 110 W | |
| | 2700 / 1500<br>rpm | |

## 696211 320 MM

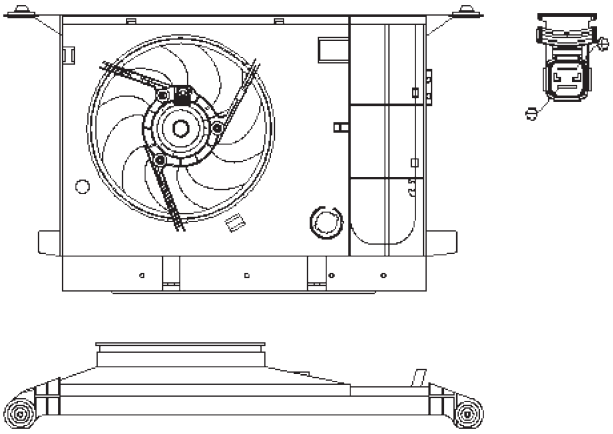

| | | |
|---|---|---|
| CITROEN | M1:120 W | |
| | 2250<br>rpm | |

## 696197 315 MM

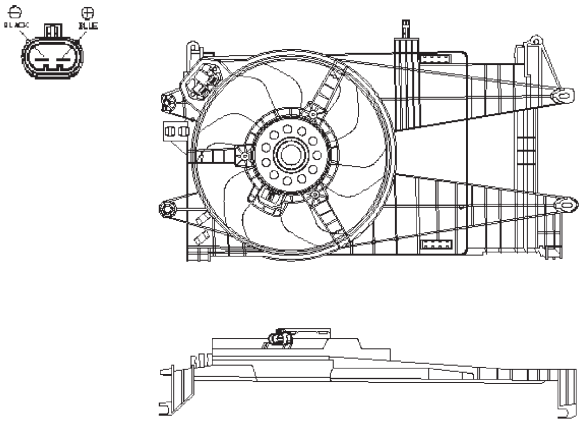


| | | |
|---|---|---|
| FIAT 46841314 | | |
| | 3500<br>rpm | |

## 696212 320 & 320MM

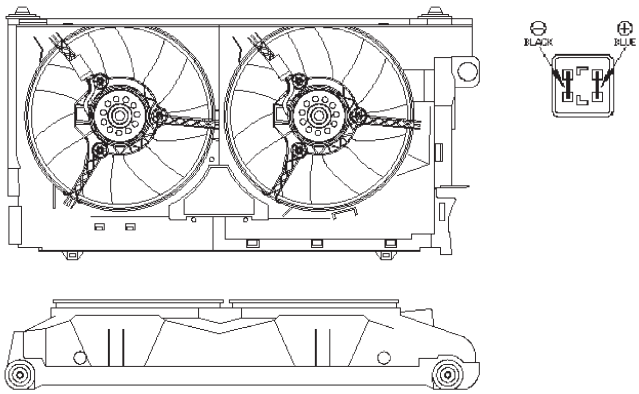


| | | |
|---|---|---|
| CITROEN<br>PEUGEOT | M1:140 W<br>M2:140 W | |
| | 2400<br>2400rpm | |

## 696210

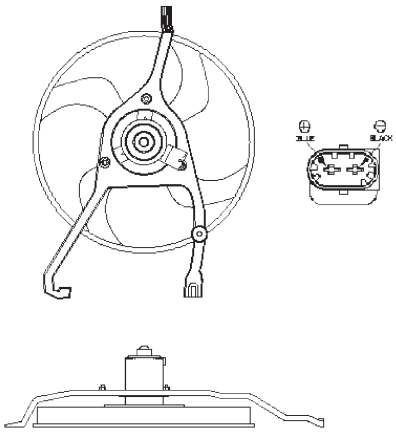


| | | |
|---|---|---|
| CITROEN 1253C4<br>PEUGEOT 1253C4 | 80 W | |
| | 2030<br>rpm | |

## 696213 320 & 320MM

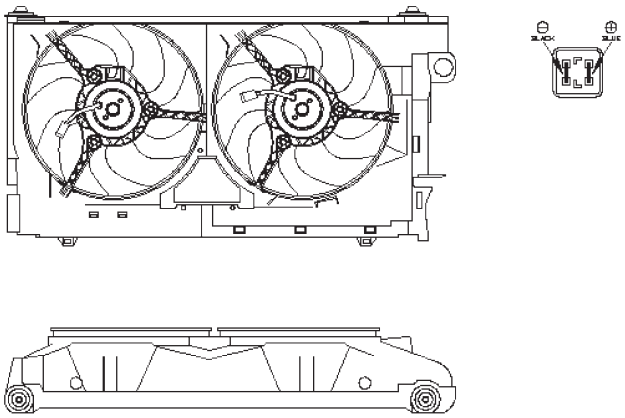


| | | |
|---|---|---|
| CITROEN<br>PEUGEOT | M1:200 W<br>M2:200 W | |
| | 2430<br>2430rpm | |

## 696214 — 335 & 335MM

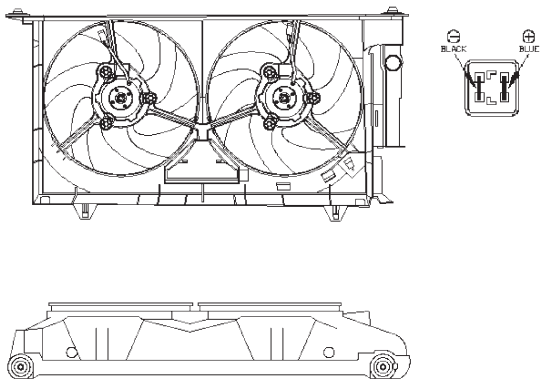


| | | |
|---|---|---|
| CITROEN<br>PEUGEOT | M1:130 W<br>M2:140 W | |
| | 2100<br>2200rpm | |

## 696217 — 380 MM

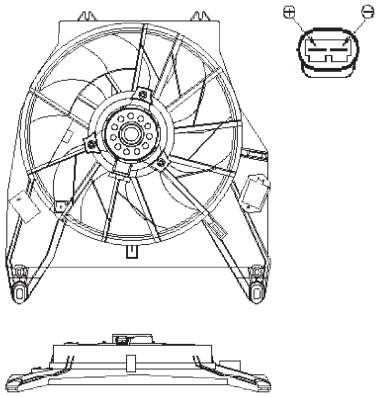

| | | |
|---|---|---|
| RENAULT | | |
| | 2200<br>rpm | |

## 696215 — 380 MM

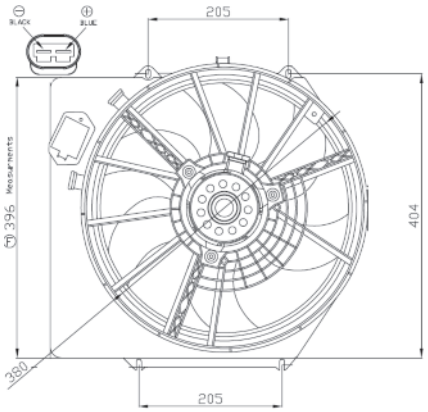


| | | |
|---|---|---|
| RENAULT | M1:165 W | |
| | 2160<br>rpm | |

## 696229 — FS2031

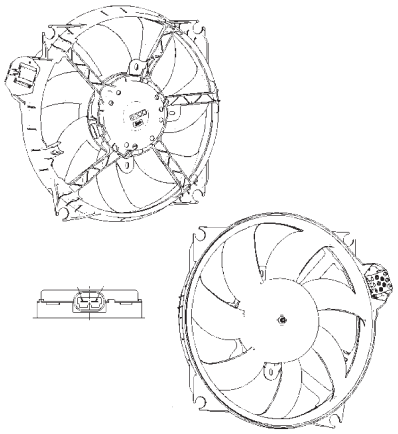

| | | |
|---|---|---|
| RENAULT 214810028R | 105 / 410 W | |
| | 1170 / 2600 rpm | |

## 696216 — 295 MM

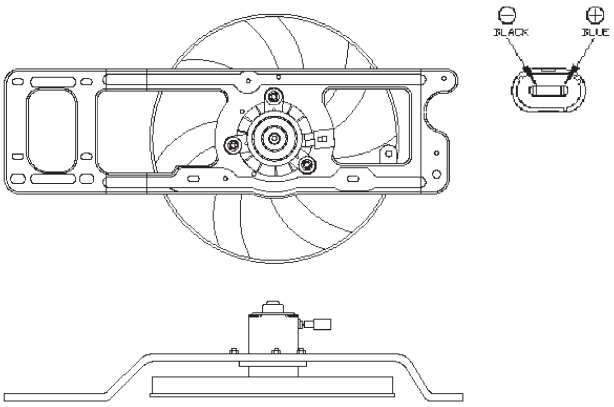


| | | |
|---|---|---|
| RENAULT | | |
| | 2360<br>rpm | |

## 696238 — FS1576

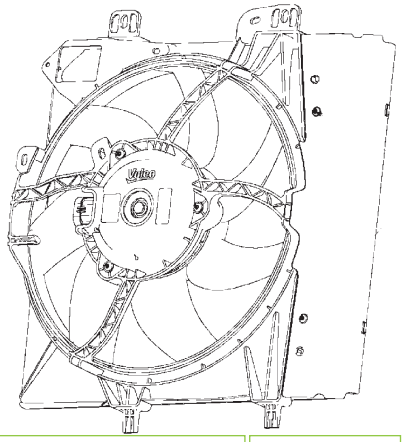

| | | |
|---|---|---|
| CITROEN 1253H6<br>PEUGEOT 1253H6 | | |
| | 2400<br>rpm | |

## 696240 MF2000

Picture not available
Image non disponible
Imagen no disponible
Immagine non disponibile
Nicht verfügbares Bild
Brak zdjęcia
Картина недоступна

| | |
|---|---|
| AUDI | 8K0959455C |

## 696243 MF2005

Picture not available
Image non disponible
Imagen no disponible
Immagine non disponibile
Nicht verfügbares Bild
Brak zdjęcia
Картина недоступна

| | |
|---|---|
| AUDI | 4F0959455M |

## 696241 MF2001

Picture not available
Image non disponible
Imagen no disponible
Immagine non disponibile
Nicht verfügbares Bild
Brak zdjęcia
Картина недоступна

| | |
|---|---|
| AUDI | 8K0959455A |

## 696273

Picture not available
Image non disponible
Imagen no disponible
Immagine non disponibile
Nicht verfügbares Bild
Brak zdjęcia
Картина недоступна

| | |
|---|---|
| BMW | 17427543282 |

## 696242 MF2004

Picture not available
Image non disponible
Imagen no disponible
Immagine non disponibile
Nicht verfügbares Bild
Brak zdjęcia
Картина недоступна

| | |
|---|---|
| AUDI | 4F0959455N |

## 696274

Picture not available
Image non disponible
Imagen no disponible
Immagine non disponibile
Nicht verfügbares Bild
Brak zdjęcia
Картина недоступна

| | |
|---|---|
| BMW | 17427563259 |

## 696275

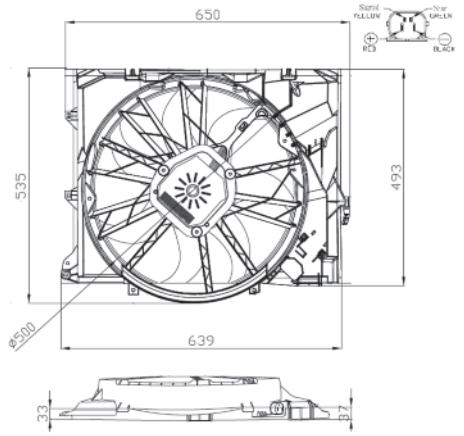


| | | |
|---|---|---|
| BMW 17427562080 | | |
| | | |

## 696278

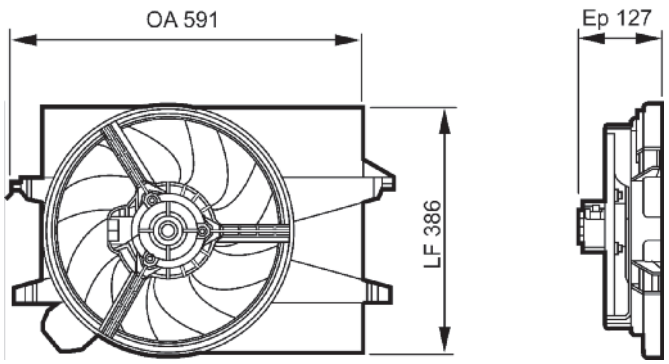


| | | |
|---|---|---|
| FORD 1337585 | | |
| | 1330 rpm | |

## 696276 365 MM

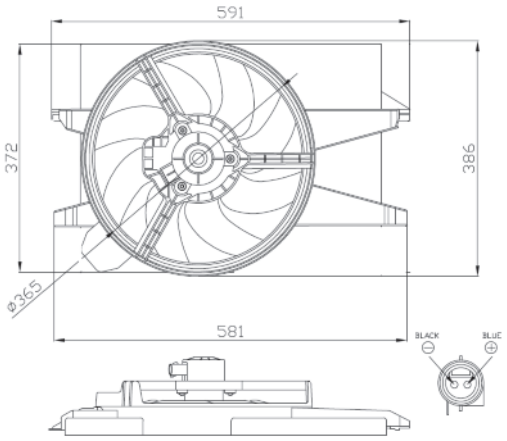


| | | |
|---|---|---|
| FORD 1366100 | | |
| | 2000 rpm | |

## 696280

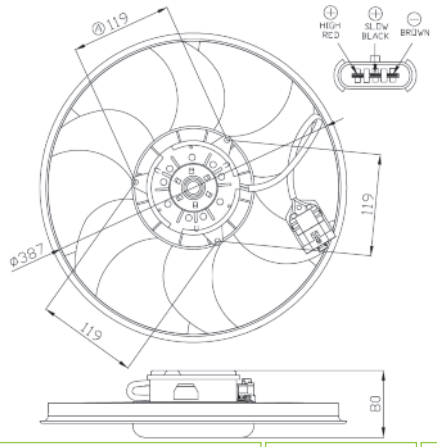


| | | |
|---|---|---|
| OPEL 1341346<br>VAUXHALL 24431828 | 210 W | |
| | 1875 / 2375 rpm | |

## 696277

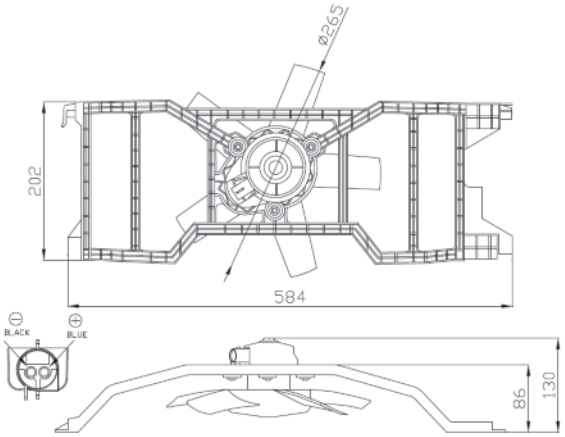


| | | |
|---|---|---|
| FORD 1337582 | | |
| | 2100 rpm | |

## 696281

Picture not available
Image non disponible
Imagen no disponible
Immagine non disponibile
Nicht verfügbares Bild
Brak zdjęcia
Картина недоступна

| | | |
|---|---|---|
| OPEL 1341219<br>VAUXHALL 22061171 | | |
| | | |

## 696282

Picture not available
Image non disponible
Imagen no disponible
Immagine non disponibile
Nicht verfügbares Bild
Brak zdjęcia
Картина недоступна

| | | | |
|---|---|---|---|
| OPEL | 1341352 | | |
| VAUXHALL | 24445190 | | |

## 696285

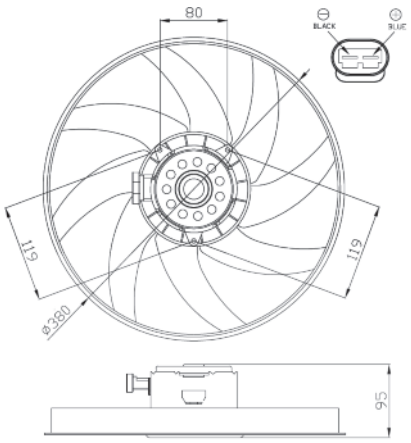


| | | | |
|---|---|---|---|
| RENAULT | 7701469149 | 240 W | |
| | | 1950 rpm | |

## 696283

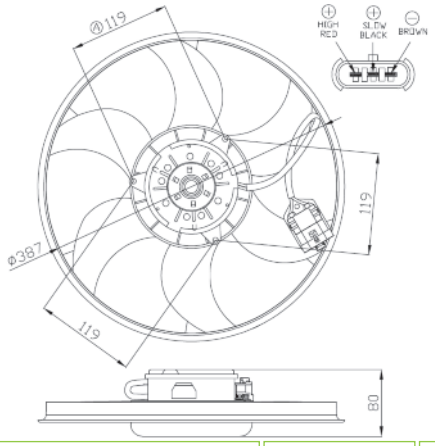


| | | | |
|---|---|---|---|
| OPEL | 1341331 | 160 W | |
| VAUXHALL | 9158007 | | |
| | | 2280 rpm | |

## 696286

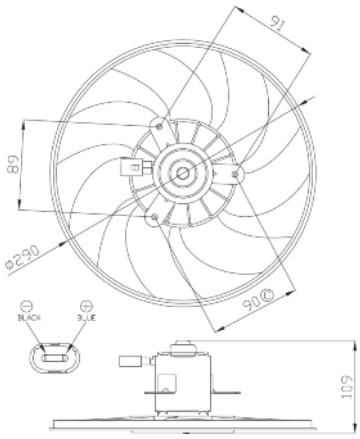


| | | | |
|---|---|---|---|
| RENAULT | 7701051492 | 50 W | |
| | | 2150 rpm | |

## 696284

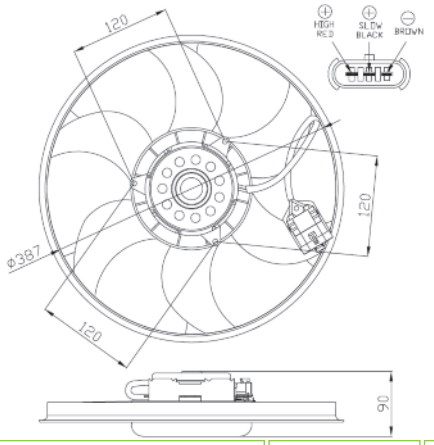


| | | | |
|---|---|---|---|
| OPEL | 1341334 | 260 W | |
| VAUXHALL | 9129965 | | |
| | | 1940 / 2510 rpm | |

## 696287

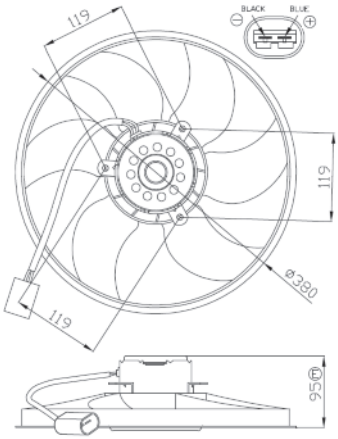


| | | | |
|---|---|---|---|
| RENAULT | 7701054966 | 140 W | |
| | | 2070 rpm | |

## 696288

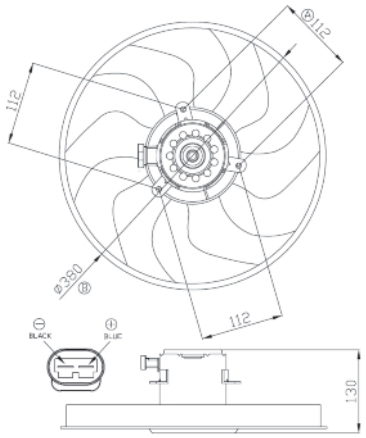


| | | |
|---|---|---|
| RENAUL | 7701050192 | 380 W |
| | | 2600 rpm |

## 696345 FS1595

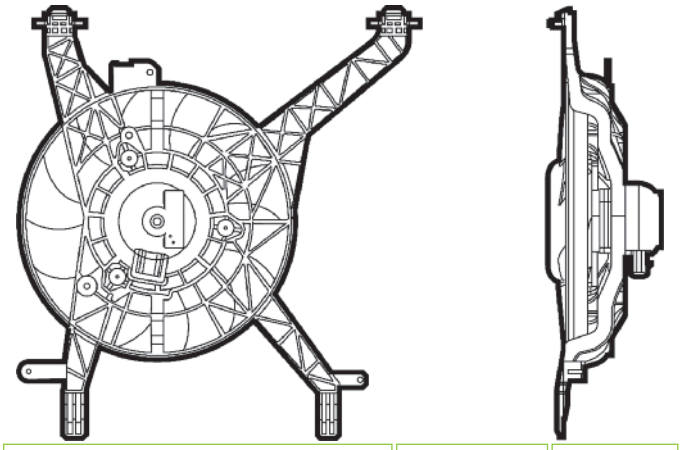

| | | |
|---|---|---|
| FORD | 1541277 | |

## 696335 FS1593

Picture not available
Image non disponible
Imagen no disponible
Immagine non disponibile
Nicht verfügbares Bild
Brak zdjęcia
Картина недоступна

| | | |
|---|---|---|
| FIAT | 51792329 | |

## 696346 FS1600

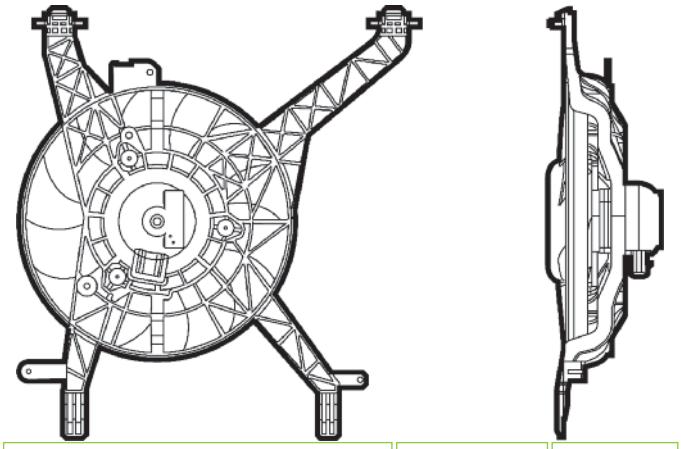

| | | |
|---|---|---|
| FORD | 1557574 | |

## 696344 FS1596

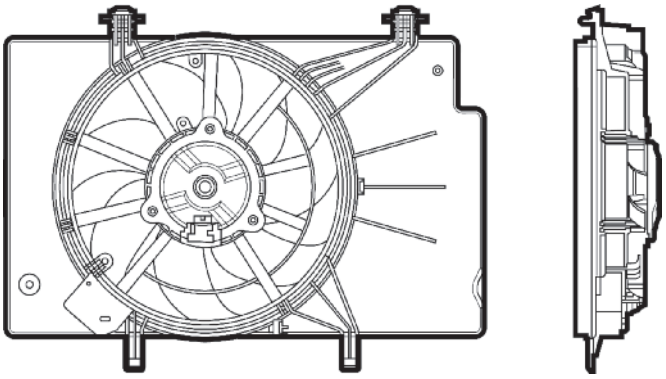

| | | |
|---|---|---|
| FORD | 1557572 | |

## 696355

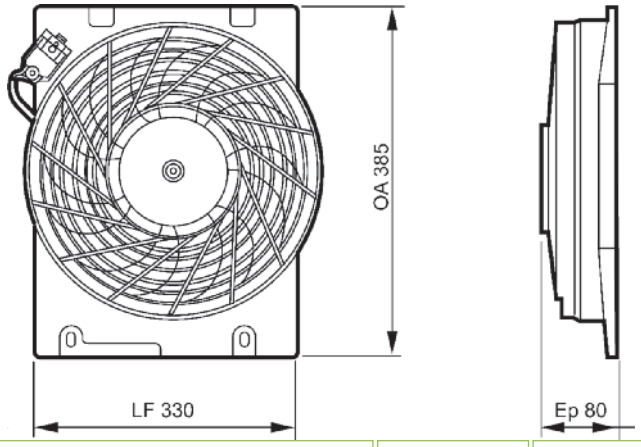


| | | |
|---|---|---|
| OPEL | 1341347 | |

## 696362

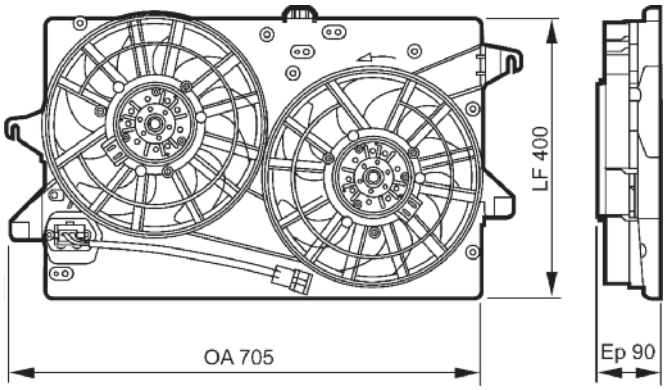


| | | |
|---|---|---|
| FORD 1152920 | | |
| | 2426/2426 rpm | |

## 696365

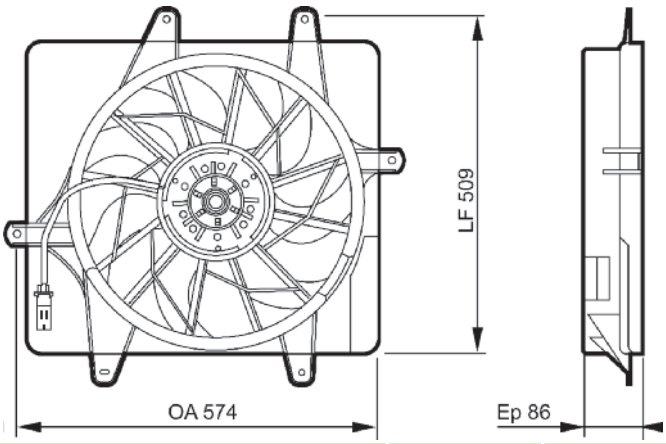


| | | |
|---|---|---|
| CHRYSLER 5017407 | | |
| | 1978 rpm | |

## 696363

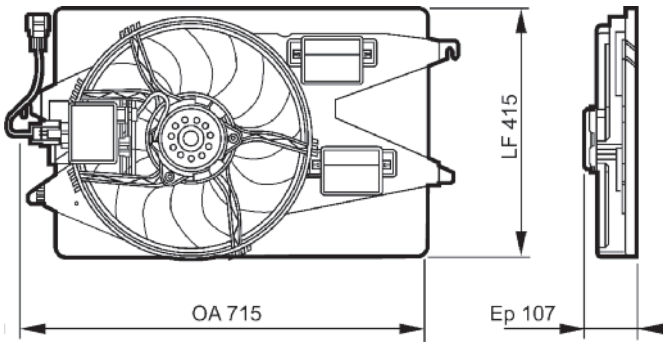


| | | |
|---|---|---|
| FORD 1331402 | | |
| | 1550/3036 rpm | |

## 696367

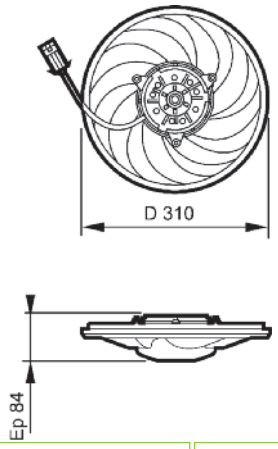


| | | |
|---|---|---|
| OPEL 1341332 | | |
| | 2697 rpm | |

## 696364

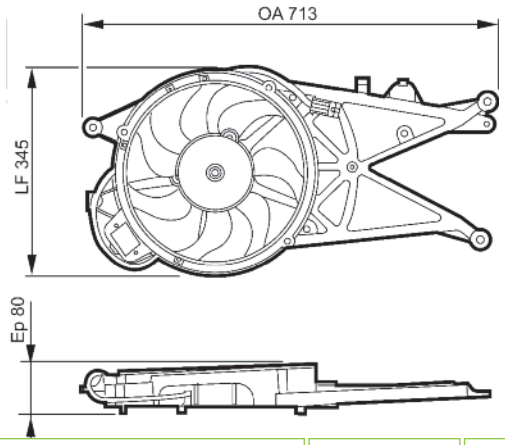


| | | |
|---|---|---|
| OPEL | | |
| | 2528 rpm | |

## 696368

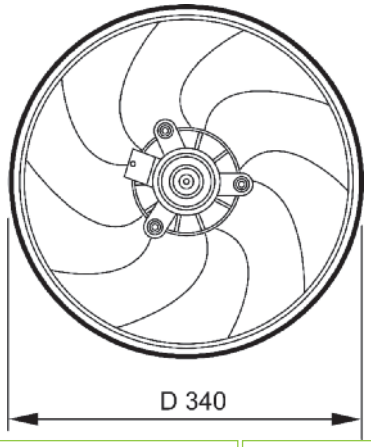


| | | |
|---|---|---|
| PEUGEOT 125383 | | |
| | 1605 rpm | |

## 696369

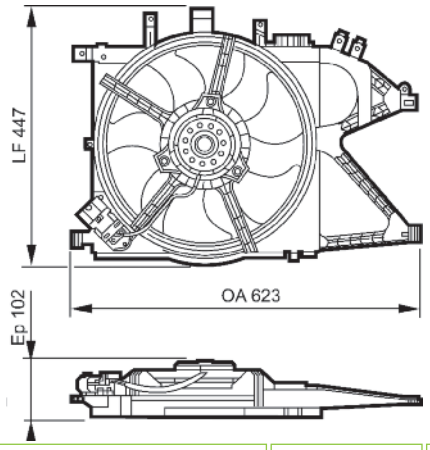


| | | |
|---|---|---|
| VAUXHALL 24421234 | | |
| | rpm | |

## 696374

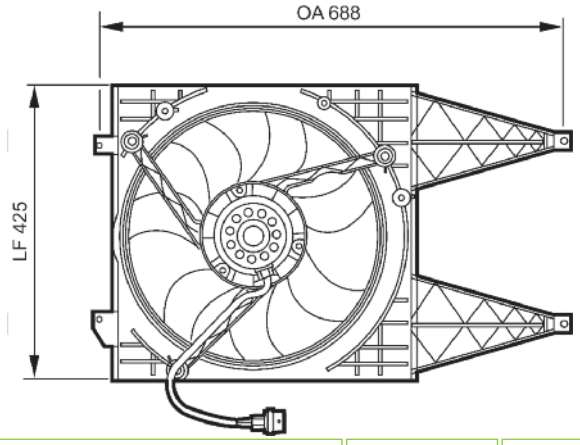


| | | |
|---|---|---|
| OPEL 6341158 | | |
| | 2225 rpm | |

## 696370

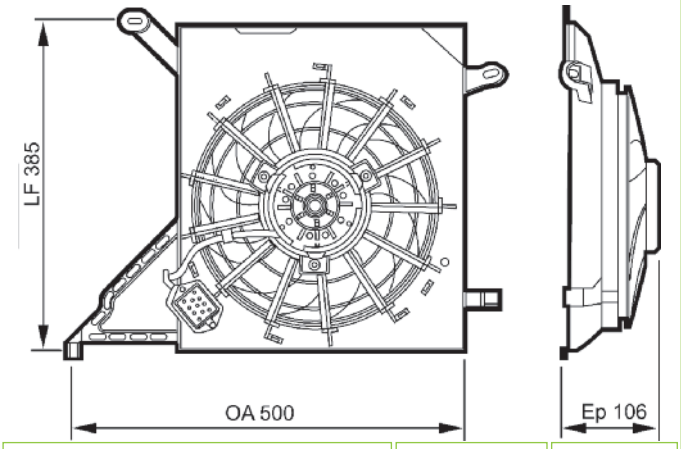


| | | |
|---|---|---|
| OPEL 1341348 | | |
| | 2178/2908 rpm | |

## 696375

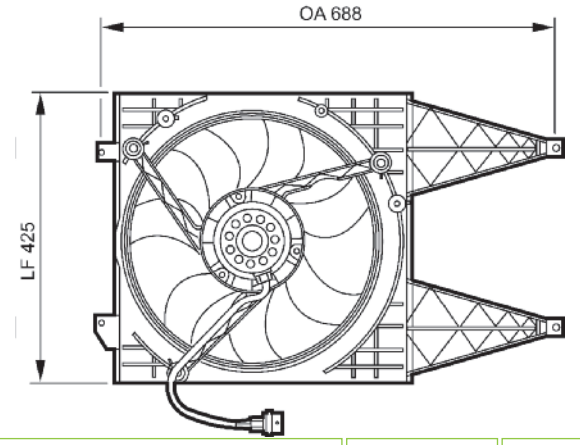


| | | |
|---|---|---|
| SEAT 6Q0959455D<br>SKODA 6Q0959455D<br>VOLKSWAGEN 6Q0959455D | | |
| | 1107/2329 rpm | |

## 696373

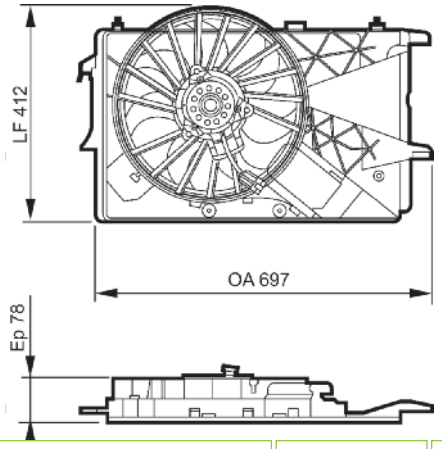


| | | |
|---|---|---|
| OPEL 6341156 | | |
| | 2556 rpm | |

## 696376

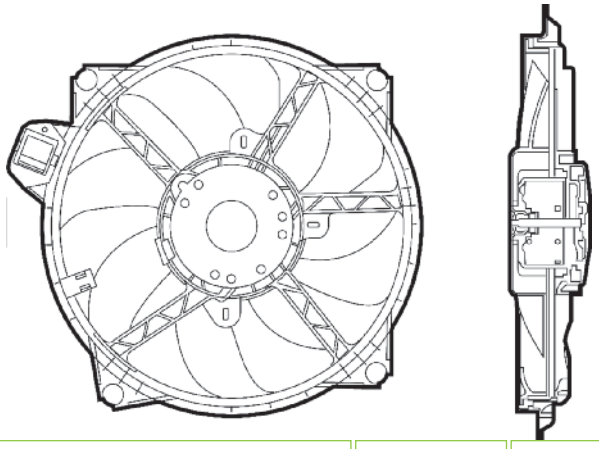

| | | |
|---|---|---|
| RENAULT 214810898R | | |
| | | |

## 696377

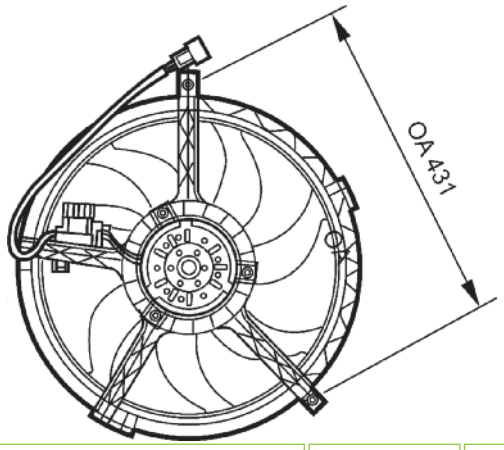


| | | |
|---|---|---|
| MINI 17422752632 | | |
| | 1964/2524 rpm | |

## 696378

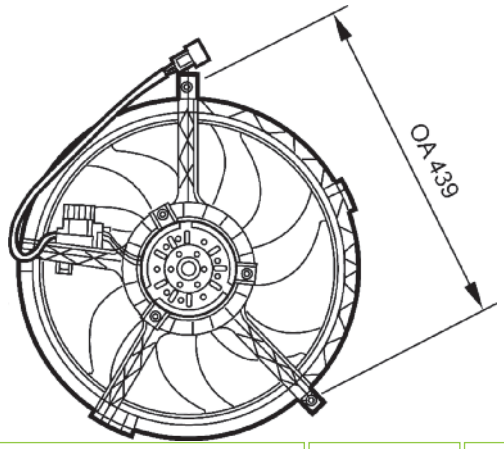


| | | |
|---|---|---|
| MINI 17427535100 | | |
| | 1964/2524 rpm | |

## 696379

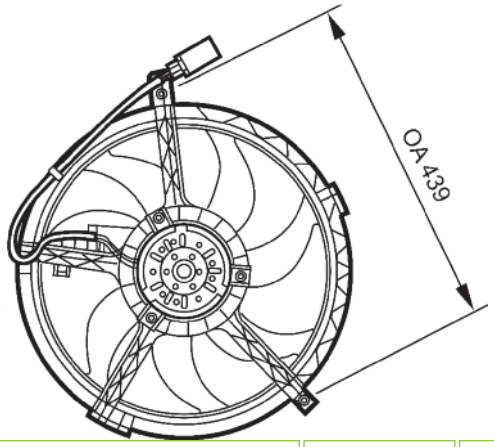


| | | |
|---|---|---|
| MINI 17422754854 | | |
| | 2131 rpm | |

## 696380

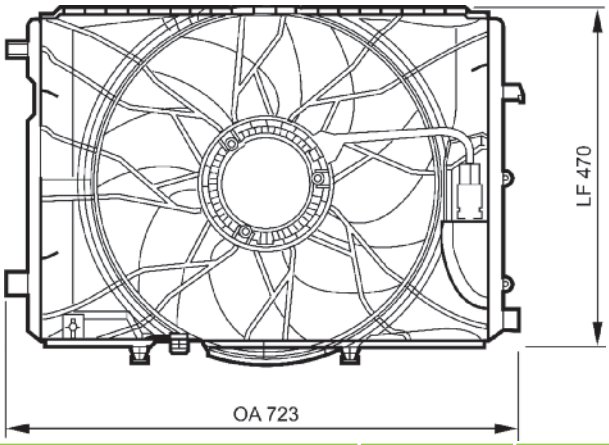


| | | |
|---|---|---|
| MERCEDES 2045000293 | | |
| | 598/2319 rpm | |

## 696381

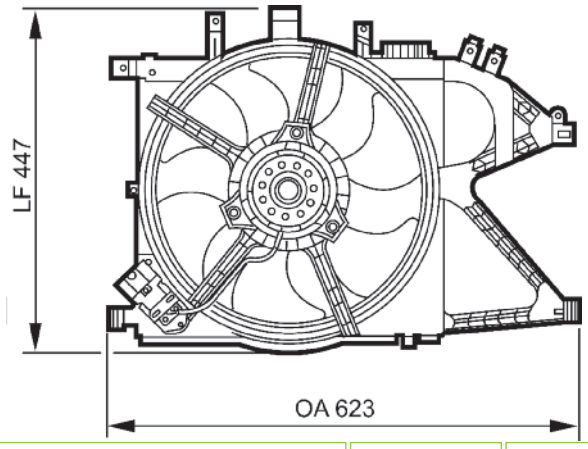


| | | |
|---|---|---|
| OPEL 1314446<br>VAUXHALL 24445185 | | |
| | 2277 rpm | |

## 696382

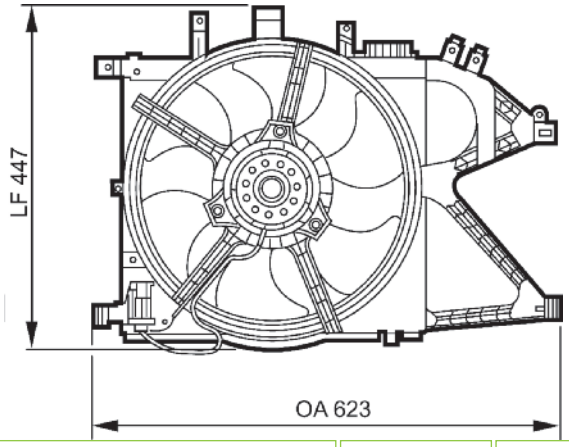


| | | |
|---|---|---|
| OPEL 1314443<br>VAUXHALL 24445183 | | |
| | 2277 rpm | |

## 696383

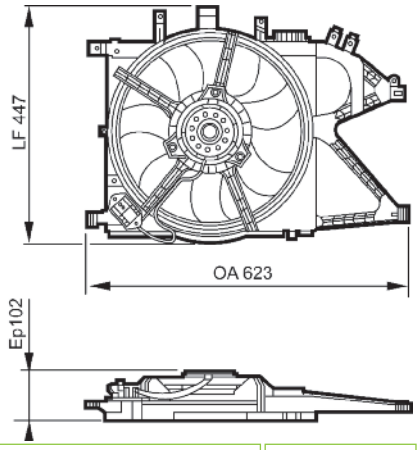


| | | |
|---|---|---|
| VAUXHALL 24402524 | | |
| | 1865/2350 rpm | |

## 696386

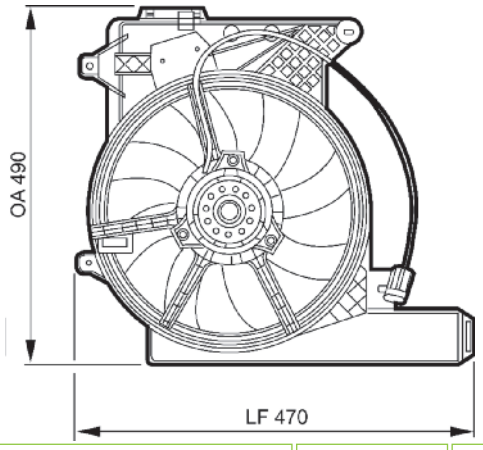


| | | |
|---|---|---|
| OPEL 1314557 | | |
| | 3041 rpm | |

## 696384

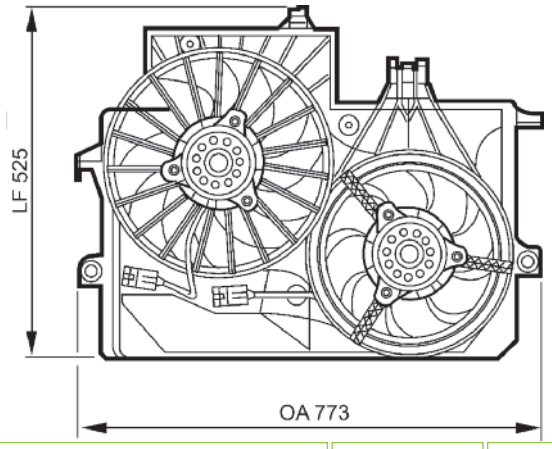


| | | |
|---|---|---|
| OPEL 6341162 | | |
| | 3075/2920 rpm | |

## 696387

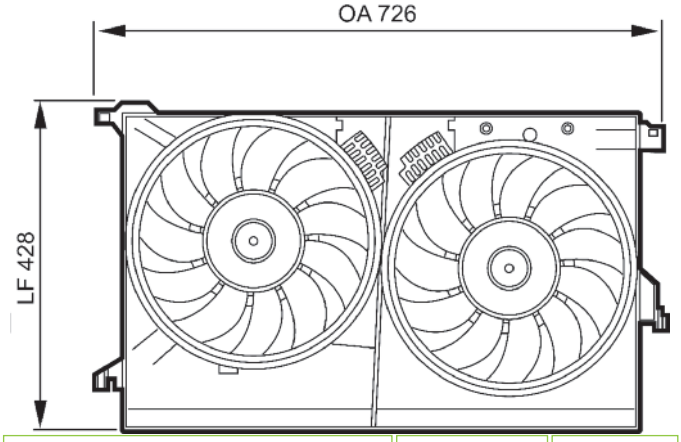


| | | |
|---|---|---|
| SAAB 24410993<br>VAUXHALL 24410993 | | |
| | 2697/2451 rpm | |

## 696385

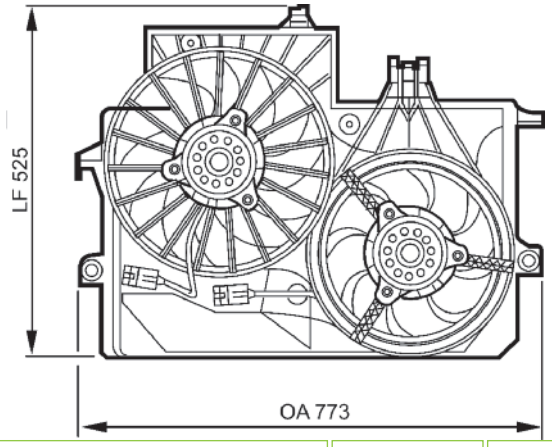


| | | |
|---|---|---|
| OPEL 1314966 | | |
| | rpm | |

## 696388

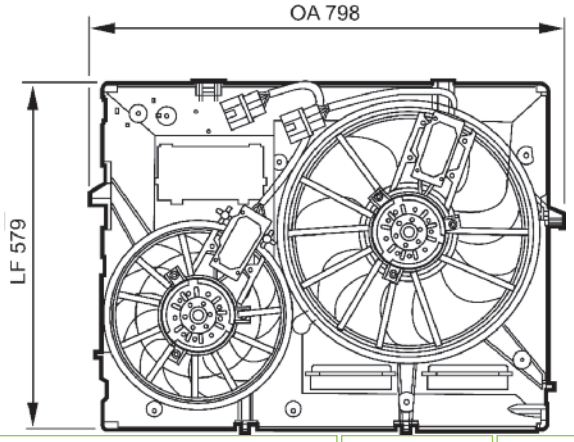


| | | |
|---|---|---|
| VOLKSWAGEN 7L0121207D | | |
| | rpm | |

## 696389

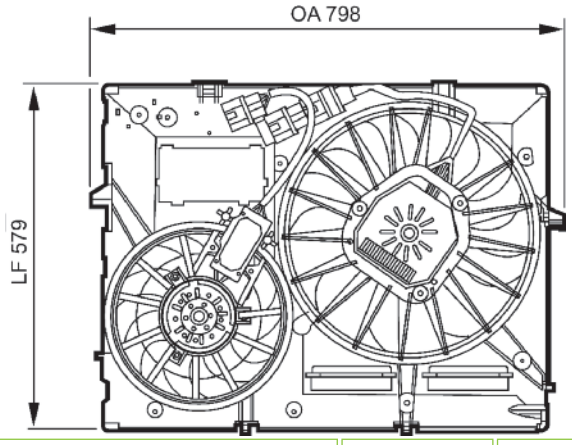


| | | |
|---|---|---|
| VOLKSWAGEN 7L0121207E | | |
| | rpm | |

## 698007

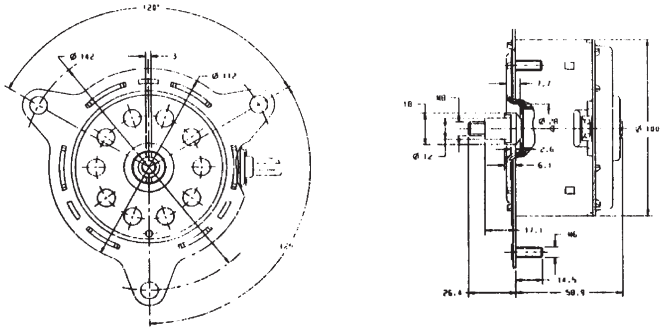

| | | |
|---|---|---|
| RENAULT 7700789732 | | |
| | | |

## 698004

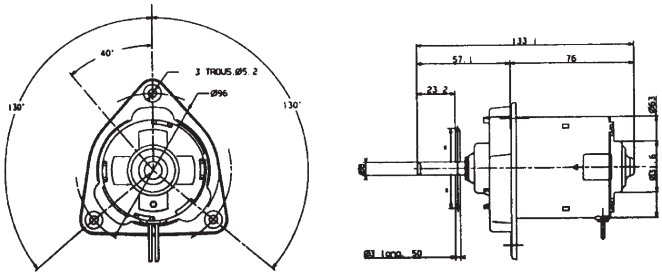


| | | |
|---|---|---|
| RENAULT 7700828623 | 130 W | |
| | 3000 rpm | |

## 698015

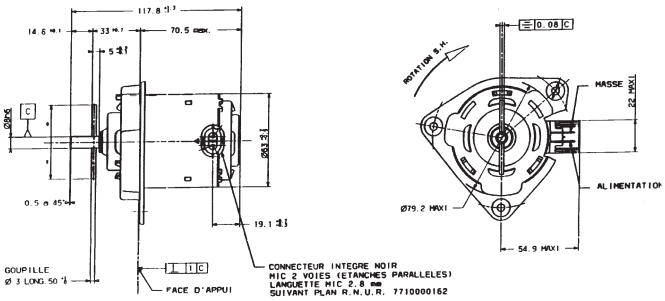


| | | |
|---|---|---|
| RENAULT 7701036722 | 95 | |
| | | |

## 698005

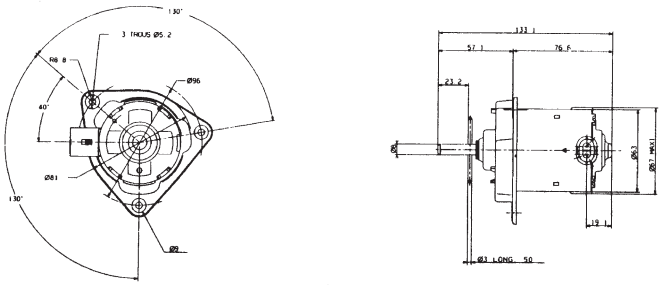


| | | |
|---|---|---|
| RENAULT 7700828624 | 130 | |
| | 3000 rpm | |

## 698084

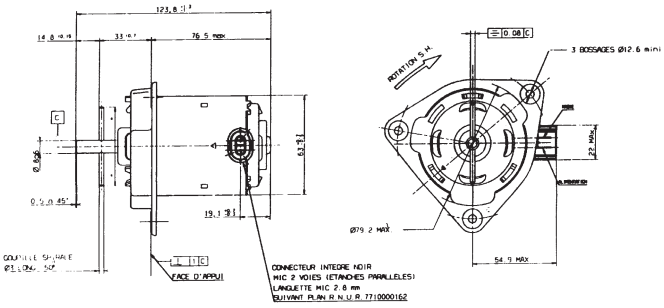


| | | |
|---|---|---|
| RENAULT 7701038405 | 130 | |
| | 3000 rpm | |

## 698085

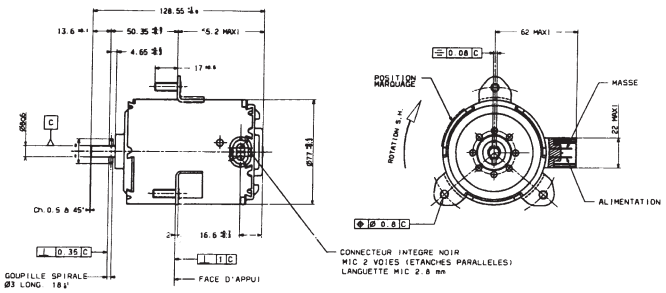


| | | |
|---|---|---|
| RENAULT 7701035695 | 65 | |

## 698178 FS1121

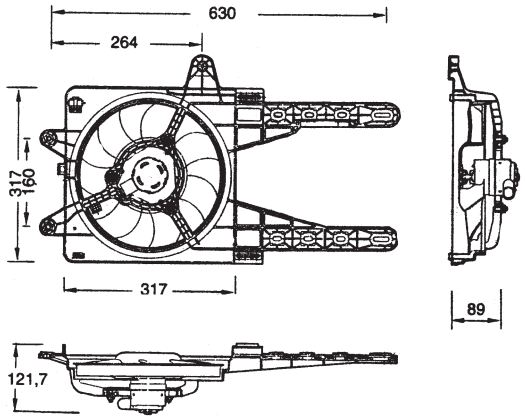


| | | |
|---|---|---|
| FIAT 46465018<br>LANCIA 46465018 | | |

## 698086

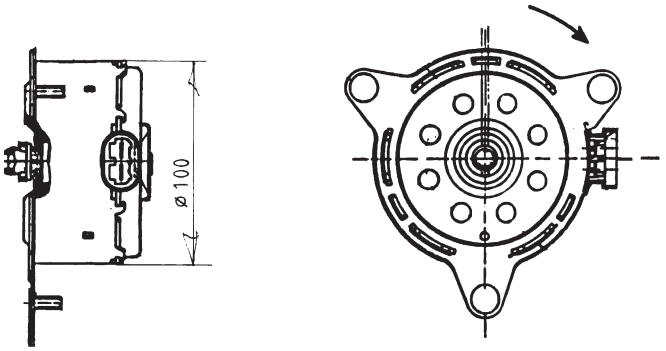


| | | |
|---|---|---|
| RENAULT 7700818904 | 200 W | |

## 698179 FS1120

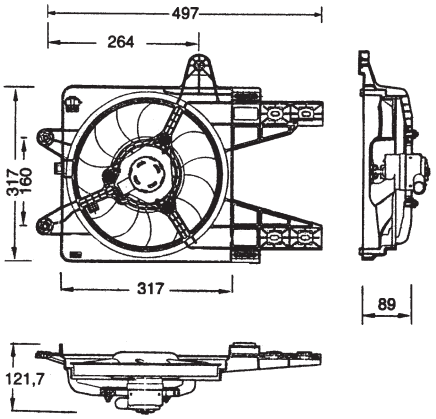


| | | |
|---|---|---|
| FIAT 7741200<br>LANCIA 7741200 | | |

## 698155 FS1149

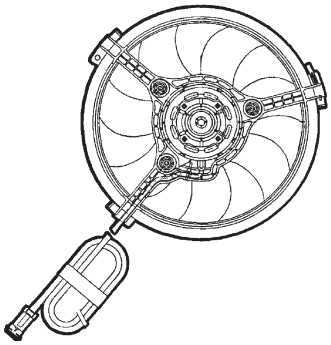

| | | |
|---|---|---|
| AUDI 8D0959455C<br>FORD 1011638<br>SEAT 8D0959455C<br>VOLKSWAGEN 8D0959455C | 340 W<br>3450 rpm | |

## 698180 FS1129

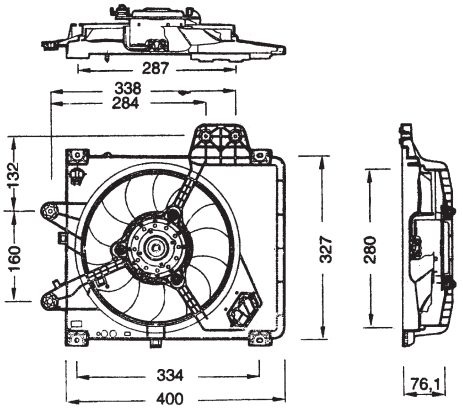


| | | |
|---|---|---|
| FIAT 46442937 | | |

## 698301

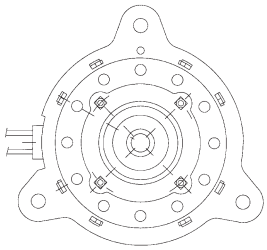

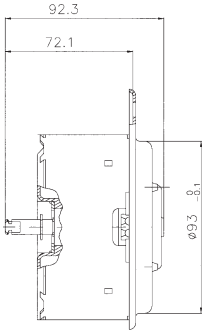


| | | |
|---|---|---|
| CITROEN 125315<br>PEUGEOT 1250C3 | 230 W | |

## 698304

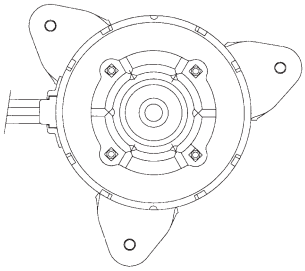

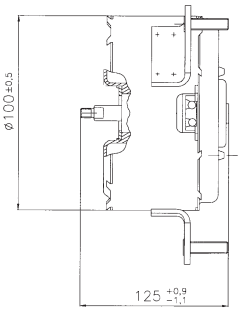


| | | |
|---|---|---|
| CITROEN 125331<br>PEUGEOT 125331 | 120 W | |

## 698302

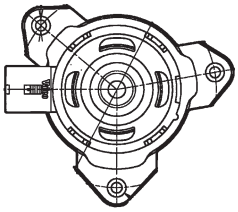

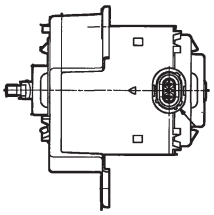

| | | |
|---|---|---|
| RENAULT 7701050677 | 93<br>2200 rpm | |

## 698305

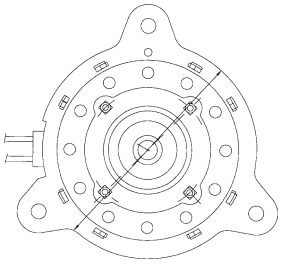

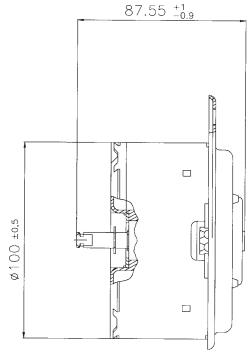


| | | |
|---|---|---|
| CITROEN 125333<br>PEUGEOT 1250E6 | 200 W | |

## 698303

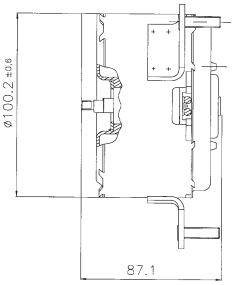


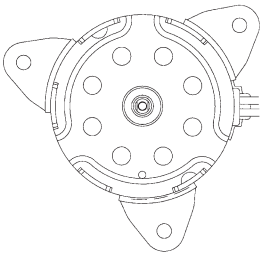

| | | |
|---|---|---|
| CITROEN 125329<br>PEUGEOT 125329 | 310 W | |

## 698312

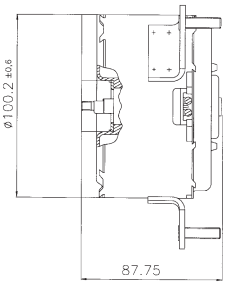


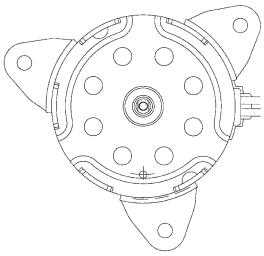

| | | |
|---|---|---|
| CITROEN 95668984 | | |

## 698313

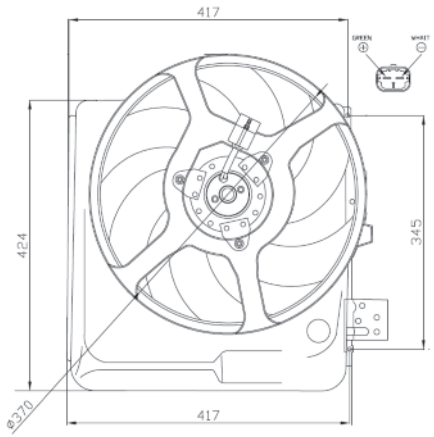


| | | |
|---|---|---|
| RENAULT 7700784652 | 220 W | |
| | 2135 rpm | |

## 698321 FS1036 300 & 300MM

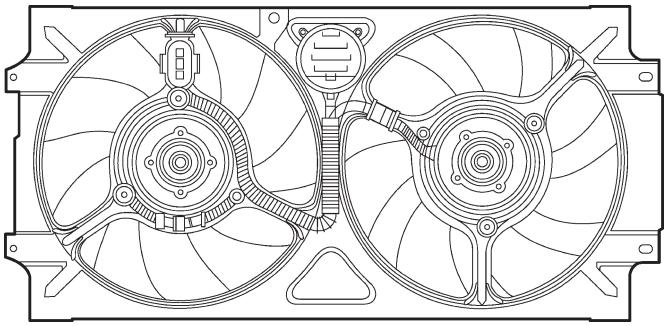

| | | |
|---|---|---|
| SEAT 6K0121191A | | |
| | 2600<br>3000rpm | |

## 698316

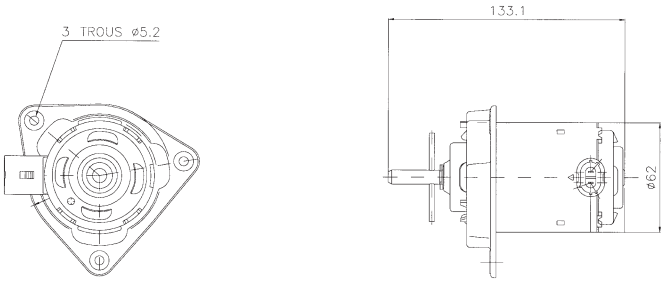


| | | |
|---|---|---|
| RENAULT 7701041302 | 117 | |
| | 2700 rpm | |

## 698342

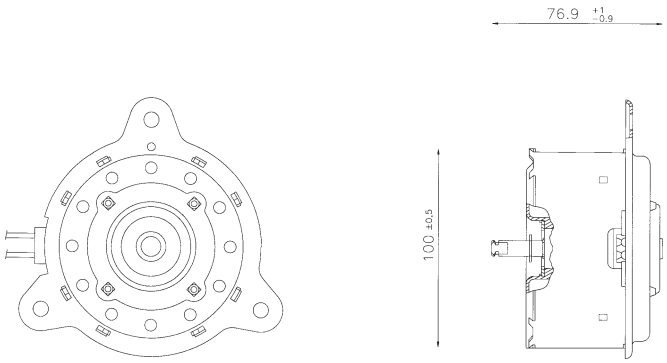


| | | |
|---|---|---|
| CITROEN 95593547 | | |
| | | |

## 698317

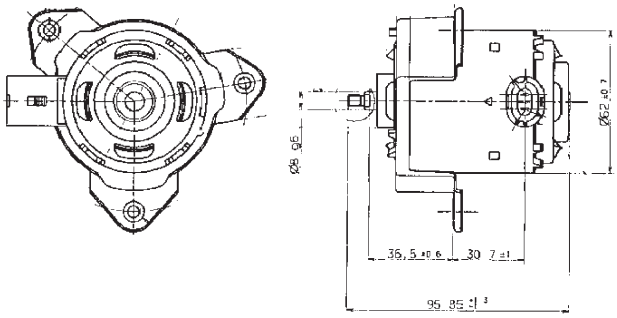


| | | |
|---|---|---|
| RENAULT 7701042440 | 93 | |
| | 2200 rpm | |

## 698343

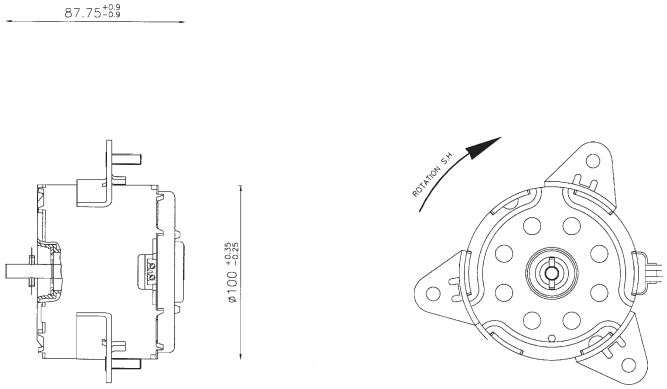


| | | |
|---|---|---|
| CITROEN 95668985 | | |
| | | |

## 698344 FS1055

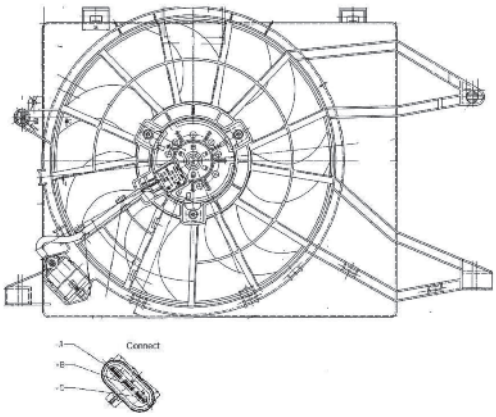


| | | | |
|---|---|---|---|
| OPEL | 1341314 | 320/210 W | |
| VAUXHALL | 9118169 | | |
| | | 2600/1840 rpm | |

## 698357

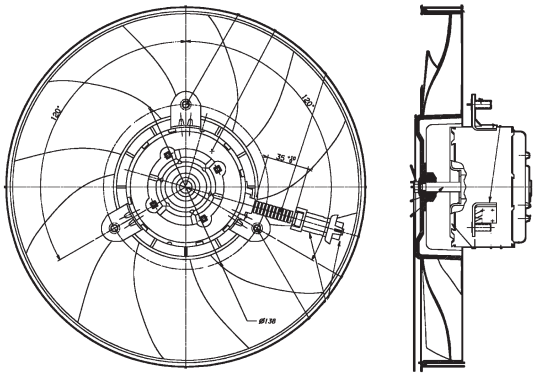

| | | | |
|---|---|---|---|
| SEAT | 6K0959455A | | |
| VOLKSWAGEN | 6K0959455A | | |
| | | 3000 rpm | |

## 698350 MF1012

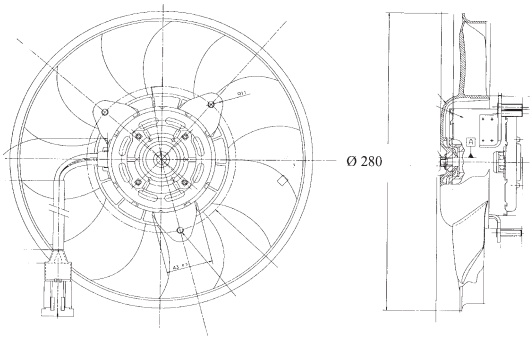


| | | | |
|---|---|---|---|
| RENAULT | 7701043673 | 350 W | |
| | | 3400 rpm | |

## 698358

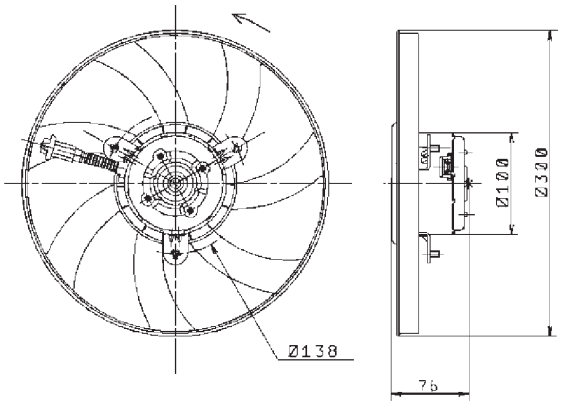


| | | | |
|---|---|---|---|
| SEAT | 6K0959455B | | |
| VOLKSWAGEN | 6K0959455B | | |
| | | 2600 rpm | |

## 698356

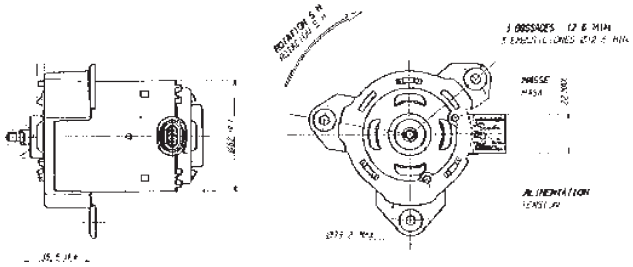

| | | | |
|---|---|---|---|
| RENAULT | 7701045215 | 182 | |
| | | 3050 rpm | |

## 698359

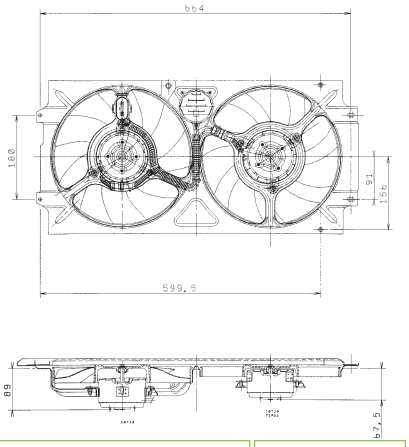


| | | | |
|---|---|---|---|
| SEAT | 6K0959455D | | |
| VOLKSWAGEN | 6K0959455D | | |
| | | 2750 rpm | |

## 698360

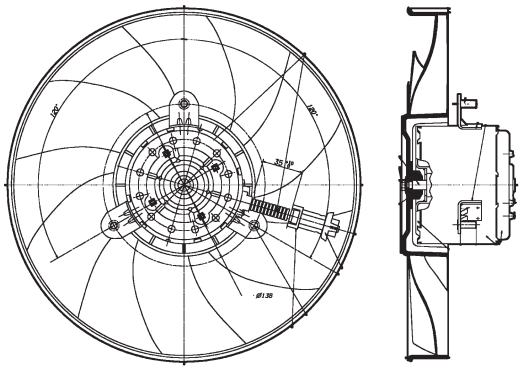

| | | | |
|---|---|---|---|
| SEAT | 6K0959455C | | |
| VOLKSWAGEN | 6K0959455C | | |
| | | 3300 rpm | |

## 698370

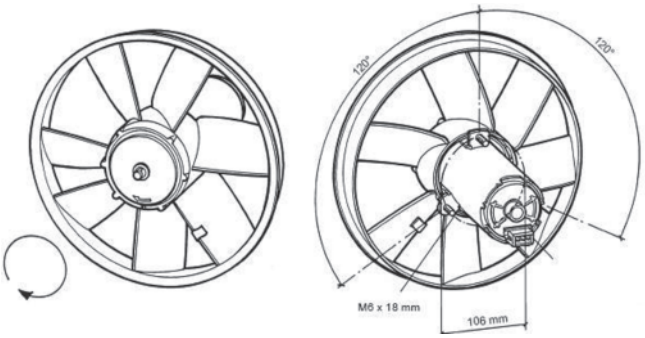


| | | | |
|---|---|---|---|
| VOLKSWAGEN | 1H0959455 | 78/126 W | |
| | | 1400/1850 rpm | |

## 698367

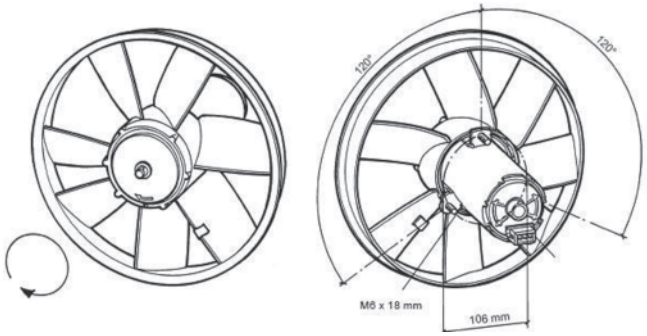


| | | | |
|---|---|---|---|
| SEAT | 1H0959455D | 260/110 W | |
| VOLKSWAGEN | 1H0959455D | | |
| | | 2500/1450 rpm | |

## 698373

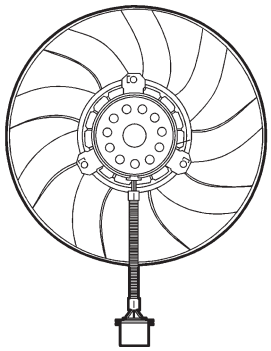

| | | | |
|---|---|---|---|
| AUDI | 1J0959455M | 60 / 220 W | |
| SEAT | 1J0959455M | | |
| SKODA | 1J0959455M | | |
| VOLKSWAGEN | 1J0959455M | | |
| | | 1400 / 2100 rpm | |

## 698368

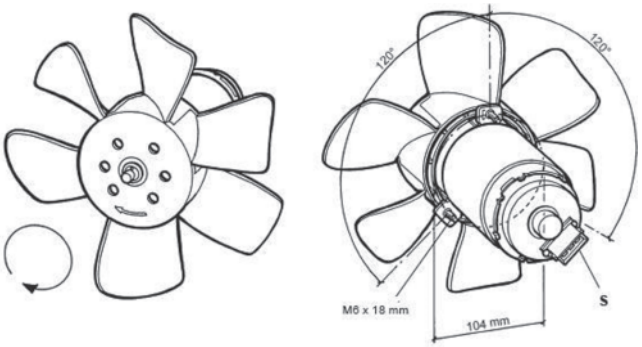


| | | | |
|---|---|---|---|
| AUDI | 165959455T | 200/60 W | |
| SEAT | 165959455T | | |
| VOLKSWAGEN | 165959455T | | |
| | | 2400/1450 rpm | |

## 698375

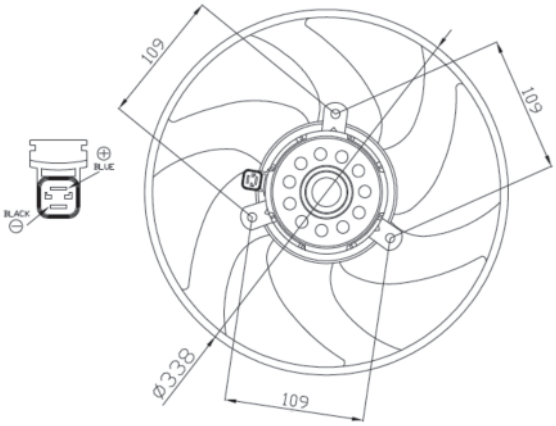


| | | | |
|---|---|---|---|
| CITROEN | 1250F0 | 200 W | |
| PEUGEOT | 1250F0 | | |
| | | 2460 rpm | |

## 698412 MF1080

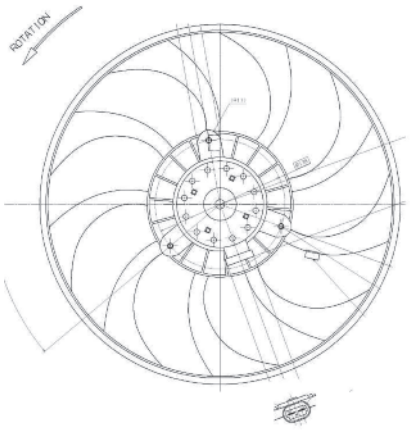


| | | | |
|---|---|---|---|
| OPEL | 4415731 | 430 W | |
| RENAULT | 7701059544 | | |
| VAUXHALL | 9111573 | | |
| | | 2400 rpm | |

## 698483 FS1248

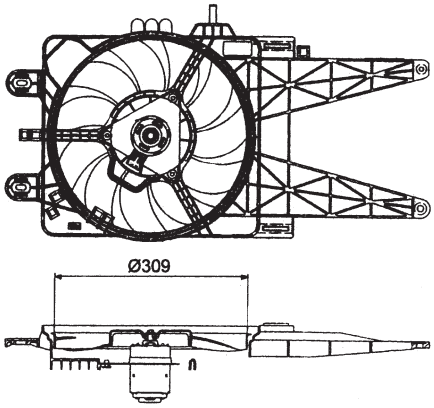


| | | | |
|---|---|---|---|
| FIAT | 46785738 | | |

## 698424 MF1131

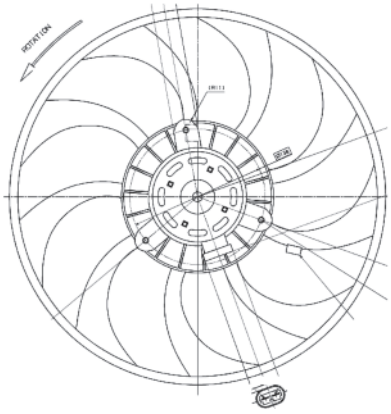


| | | | |
|---|---|---|---|
| OPEL | 4501134 | 430 W | |
| RENAULT | 7701046205 | | |
| VAUXHALL | 9161434 | | |
| | | 2400 rpm | |

## 698484 FS1411

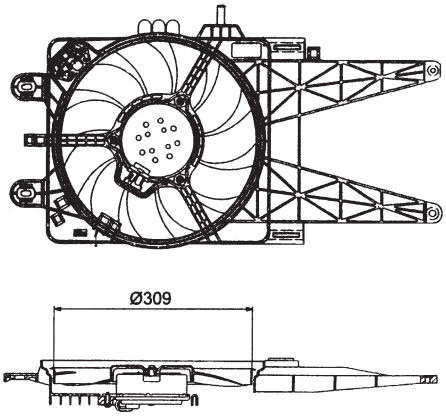


| | | | |
|---|---|---|---|
| FIAT | 51742164 | | |

## 698444

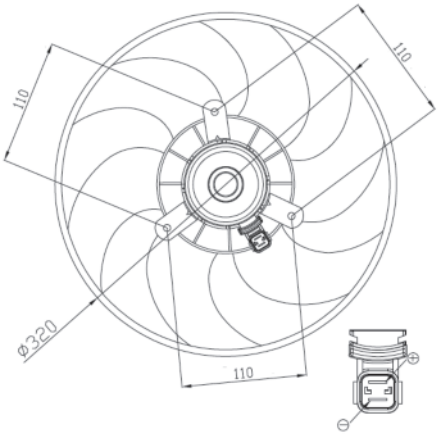


| | | | |
|---|---|---|---|
| CITROEN | 125363 | 130 W | |
| PEUGEOT | 125363 | | |
| | | 2160 rpm | |

## 698493

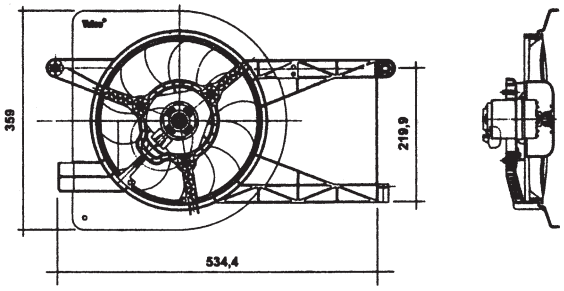


| | | | |
|---|---|---|---|
| FORD | 1092378 | | |

## 698528

Picture not available
Image non disponible
Imagen no disponible
Immagine non disponibile
Nicht verfügbares Bild
Brak zdjęcia
Картина недоступна

| | | | |
|---|---|---|---|
| SEAT | 6K0959455AA | | |
| VOLKSWAGEN | 6K0959455AA | | |

## 698562 FS107

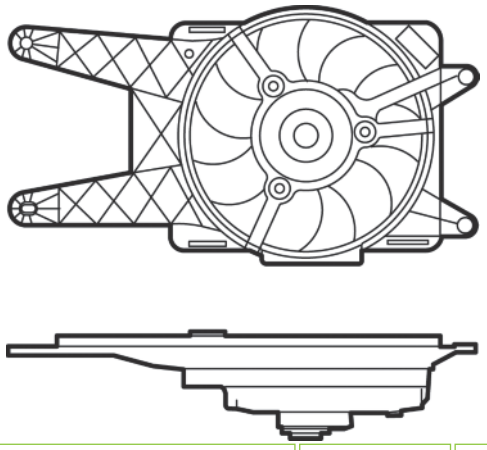

| | | | |
|---|---|---|---|
| FIAT | 46789792 | | |

## 698542 FS1452

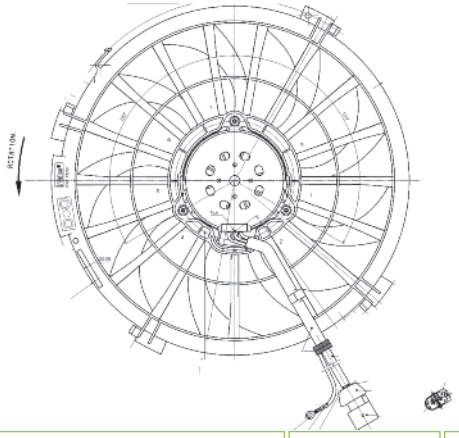

| | | | |
|---|---|---|---|
| CITROEN | 125394 | 420 W | |
| PEUGEOT | 125394 | | |
| | | 2400 rpm | |

## 698609 MF1123

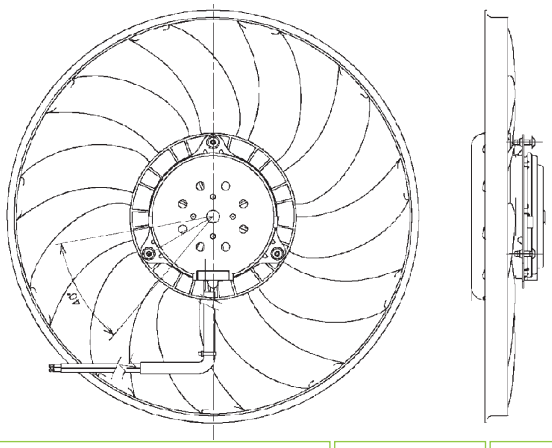

| | | | |
|---|---|---|---|
| AUDI | 8E0959455A | 300 W | |

## 698552 FS1207

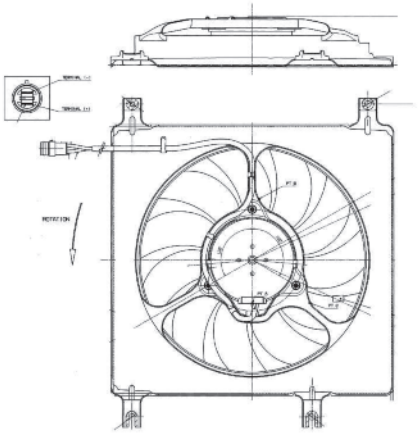

| | | | |
|---|---|---|---|
| OPEL | 09204168 | | |
| VAUXHALL | 09204168 | | |

## 698610 MF1124

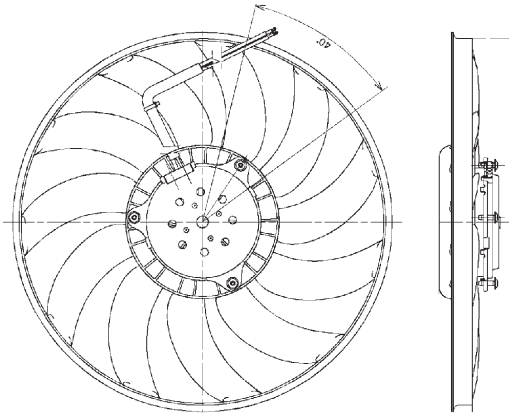

| | | | |
|---|---|---|---|
| AUDI | 8E0959455 | 300 W | |

## 698611 MF1121

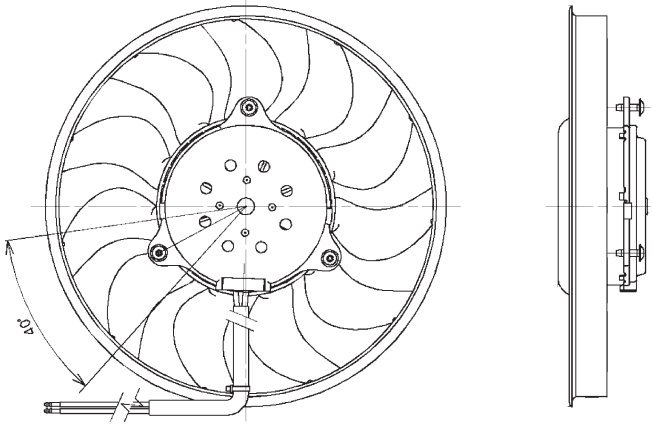


| | | |
|---|---|---|
| AUDI 8E0959455B | 250 W | |

## 698786 FS1391

Picture not available
Image non disponible
Imagen no disponible
Immagine non disponibile
Nicht verfügbares Bild
Brak zdjęcia
Картина недоступна

| | | |
|---|---|---|
| FIAT 46799410 | | |

## 698612 MF1122

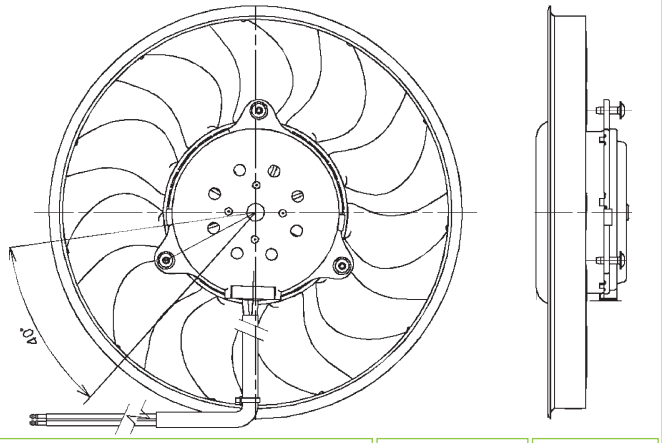


| | | |
|---|---|---|
| AUDI 8E0959455C | 250 W | |

## 698844 MF1028

Picture not available
Image non disponible
Imagen no disponible
Immagine non disponibile
Nicht verfügbares Bild
Brak zdjęcia
Картина недоступна

| | | |
|---|---|---|
| OPEL 1341362<br>SAAB 24410988<br>VAUXHALL 24410988 | | |

## 698669

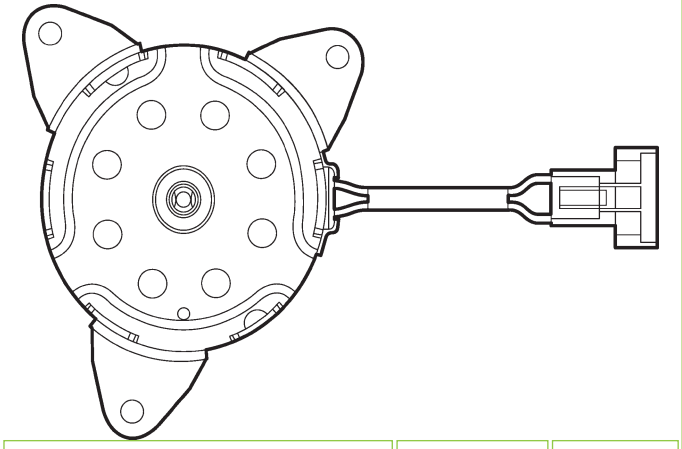

| | | |
|---|---|---|
| ROVER JRM100060 | 200 | |

## 730015 RM1753 CBS

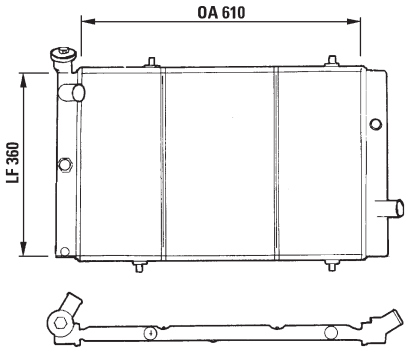


| | | |
|---|---|---|
| PEUGEOT 1300G2 | 610x360x24 | 32mm L |
| | | 32mm L |

## 730018 CBS

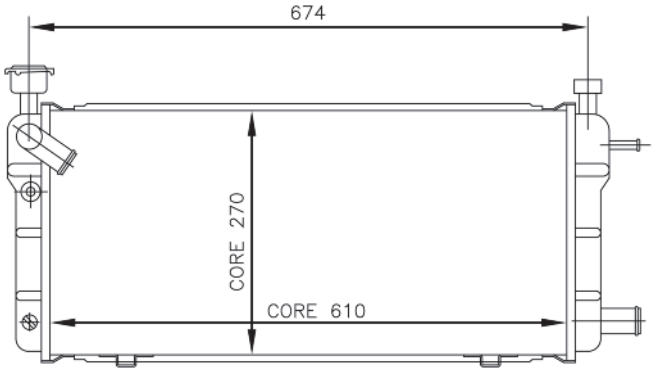


| | | | |
|---|---|---|---|
| PEUGEOT | 133035 | 610x270x35 | 32mm L |
| | | - | 32mm L |

## 730071 CBS

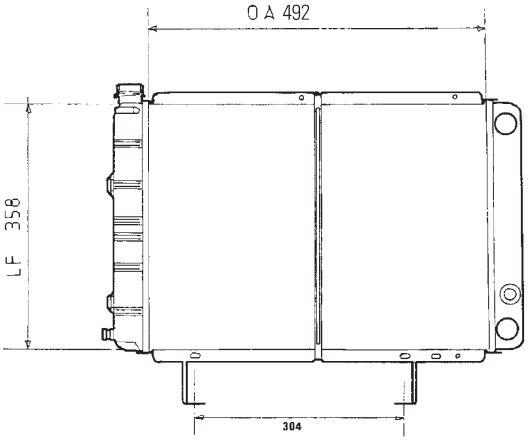


| | | | |
|---|---|---|---|
| PEUGEOT | 1300E1 | 492x358x38 | 40mm L |
| | | + | 40mm QC |

## 730040 RM2006 ALM

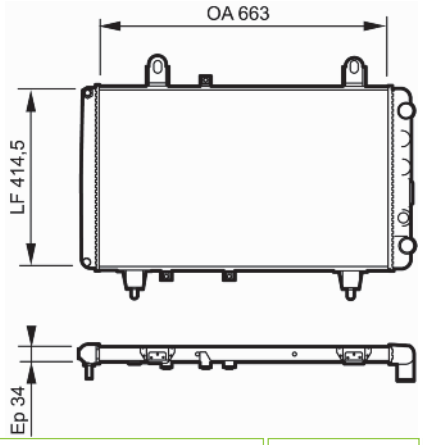


| | | | |
|---|---|---|---|
| ARO | 1300K3 | 663x390x34 | 38mm L |
| CITROEN | 1300J9 | | |
| FIAT | 5981189 | | |
| PEUGEOT | 1300J9 | | |
| | | - | 38mm L |

## 730110 CBS

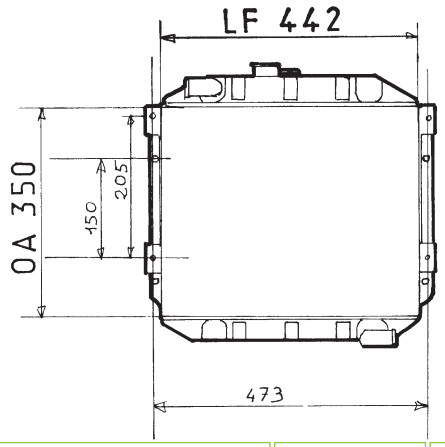


| | | | |
|---|---|---|---|
| FORD | 6084481 | 350x442x31 | 32mm L |
| | | - | 32mm L |

## 730055 RM1165 ALM

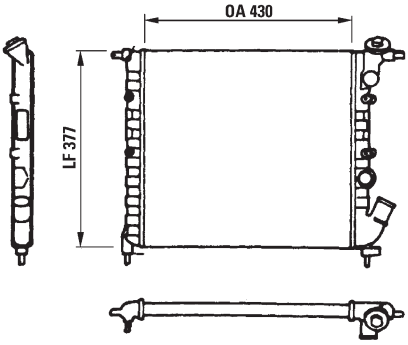


| | | | |
|---|---|---|---|
| RENAULT | 7701047887 | 430x377,5x32 | 32mm L |
| | | - | 32mm L |

## 730116 CBS

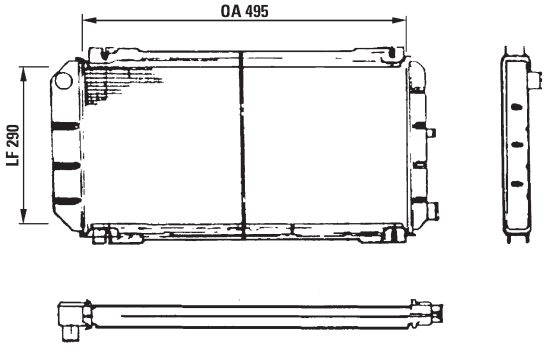


| | | | |
|---|---|---|---|
| FORD | 6160667 | 495x290x34 | 32mm L |
| | | - | 32mm L |

## 730117 RM1139 ALM

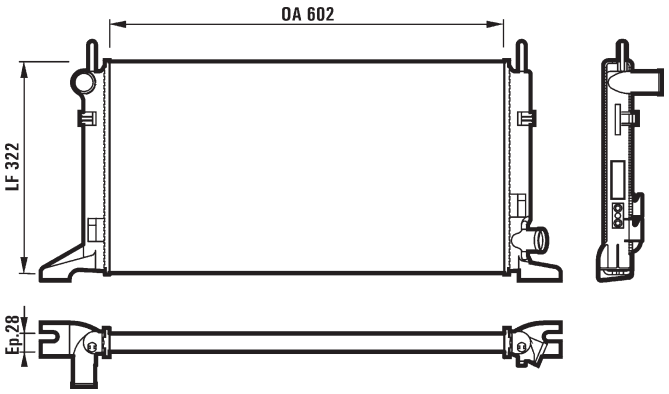


| | | |
|---|---|---|
| FORD 1643537 | 602x322x28 | L |
| | | L |

## 730125 RM1760 ALM

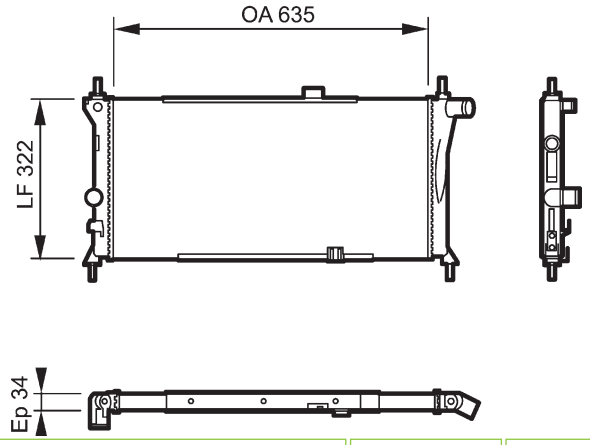


| | | |
|---|---|---|
| OPEL 1300126<br>VAUXHALL 90442550 | 635x322x34 | 35mm L |
| | | 35mm L |

## 730119 RM1146 ALM

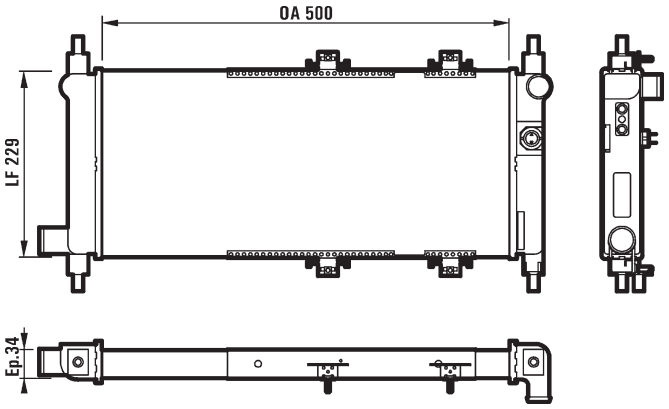


| | | |
|---|---|---|
| ROVER GRD105 | 500x229,5x34 | 32mm L |
| | | 32mm L |

## 730140 CBS

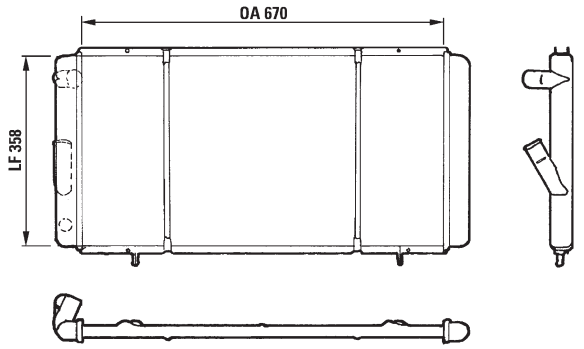


| | | |
|---|---|---|
| RENAULT 7700785734 | 670x358x24 | 32mm L |
| | | 32mm L |

## 730124 RM1732 ALM

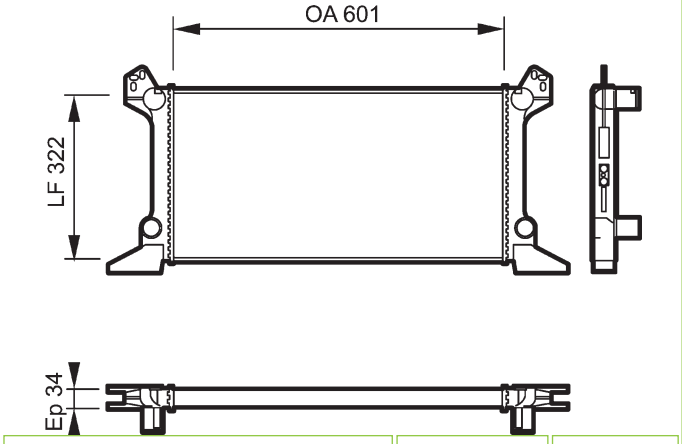


| | | |
|---|---|---|
| FORD 6160274 | 601x322x34 | 38mm L |
| | | 38mm L |

## 730168 CBS

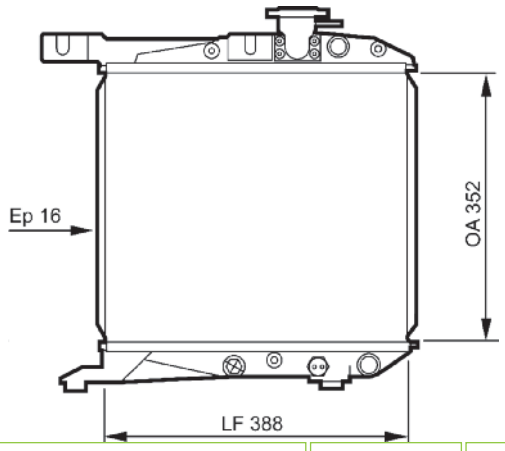


| | | |
|---|---|---|
| HONDA 19010PE0033<br>ROVER GRD124 | 352x388x16 | 30mm L |
| | | 30mm L |

## 730172 CBS

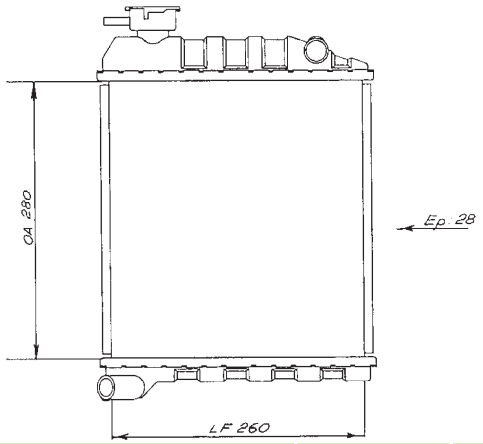


| | | |
|---|---|---|
| ROVER GRD110 | 270x265x40 | 28mm L |
| | | 28mm L |

## 730182 CBS

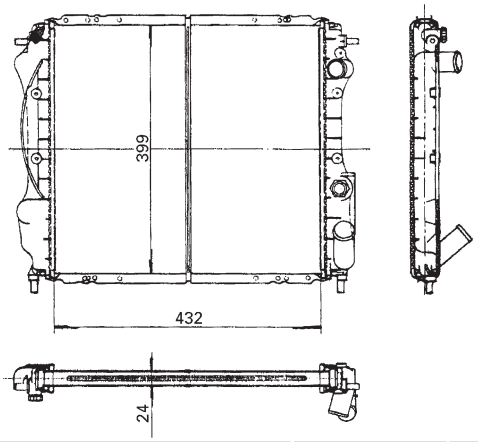


| | | |
|---|---|---|
| RENAULT 7700806576 | 432x399x24 | L |
| | | L |

## 730180 RA1506 CBS

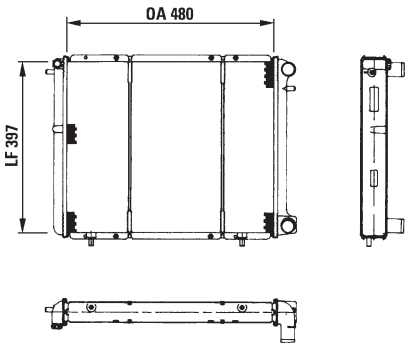


| | | |
|---|---|---|
| RENAULT 7700790964 | 480x396,7x47 | 32mm L |
| | | 32mm L |

## 730183 RA1505 ALB

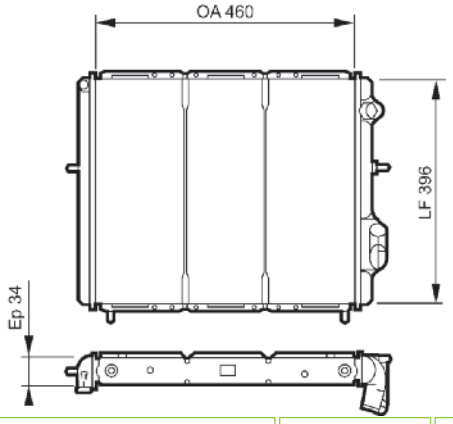


| | | |
|---|---|---|
| RENAULT 7700804240 | 460x396x34 | 32mm L |
| | | 32mm L |

## 730181 CBS

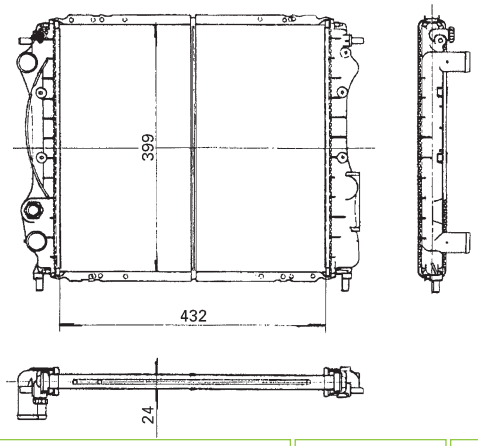


| | | |
|---|---|---|
| RENAULT 7700806575 | 432x399x24 | L |
| | | L |

## 730184 RA1510 ALB

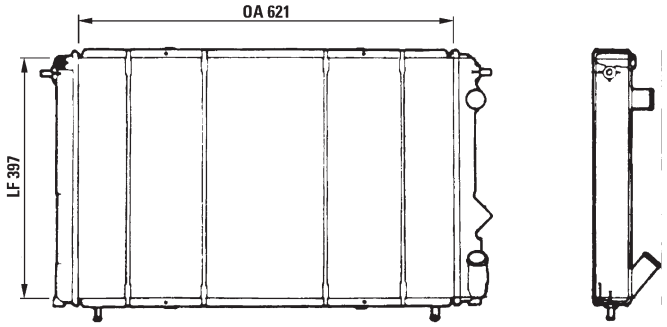


| | | |
|---|---|---|
| RENAULT 6025101338 | 621x396x34 | 32mm L |
| | | 32mm L |

## 730185 CBS

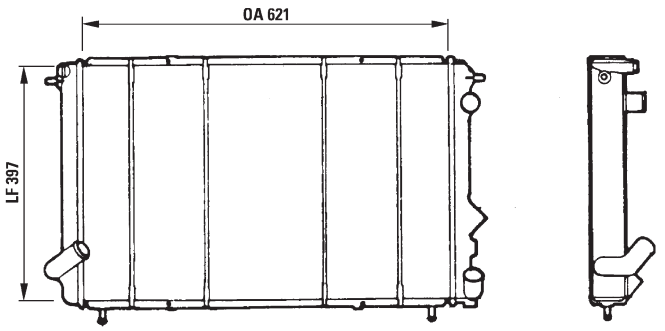


| | | |
|---|---|---|
| RENAUTH 6025101341 | 621x397x47 | 32mm L |
| | | 32mm L |

## 730317 ALM

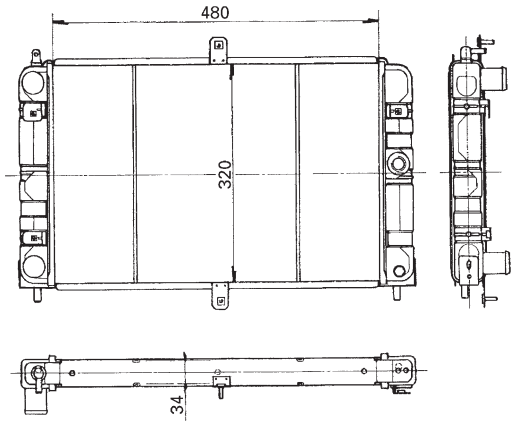


| | | |
|---|---|---|
| LADA 21081301012 | 480x341x34 | 32mm L |
| | | 32mm L |

## 730309 RM1764 ALM

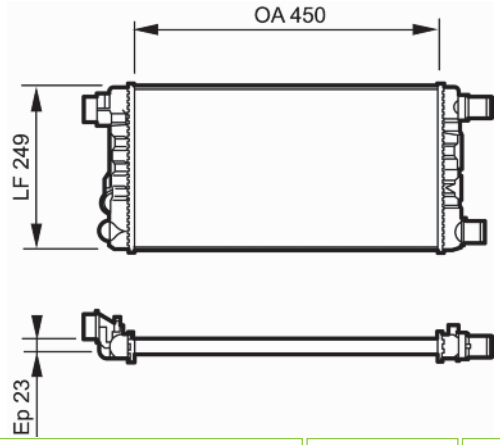


| | | |
|---|---|---|
| FIAT 46475456 | 450x248x23 | 32mm L |
| | | 32mm L |

## 730319 RA2053 ALB

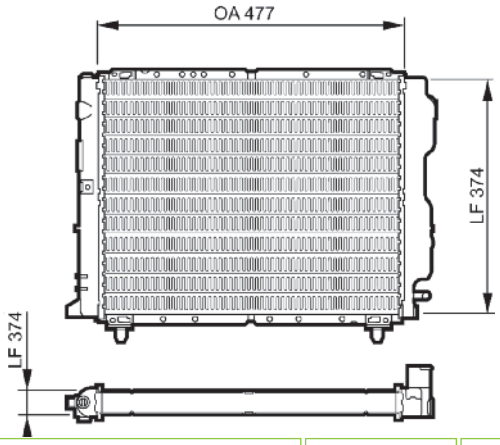


| | | |
|---|---|---|
| LANCIA 82440378 | 477x374x34 | 35.5mm L |
| | | 35.5mm L |

## 730316 CBS

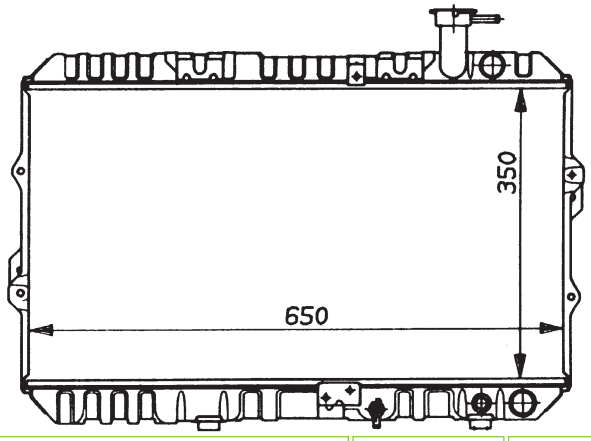


| | | |
|---|---|---|
| HONDA 19010PE1013 | 350x650x17 | 28mm L |
| | | 28mm L |

## 730334 CBS

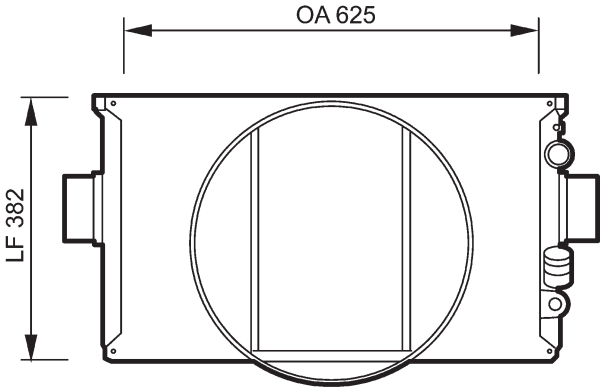


Ep 36

| | | |
|---|---|---|
| IVECO 93813747 | 625x382x36 | |
| | | |

## 730344 RAB023 CBS

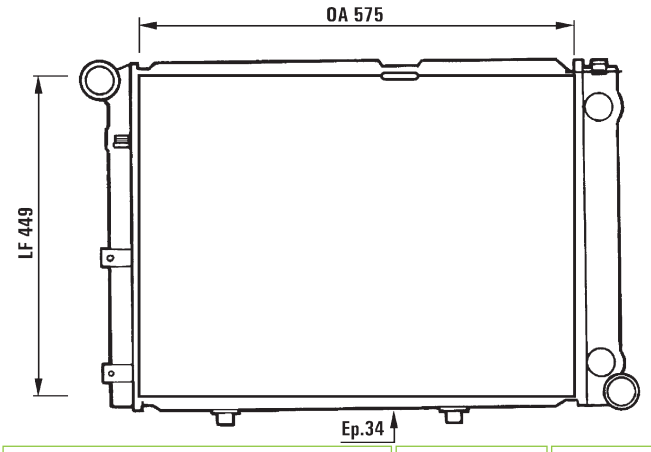


| | | |
|---|---|---|
| MERCEDES 2015004303 | 575x449x34 | 35mm L |
| | + | 35mm L |

## 730349 RC1101 CBS

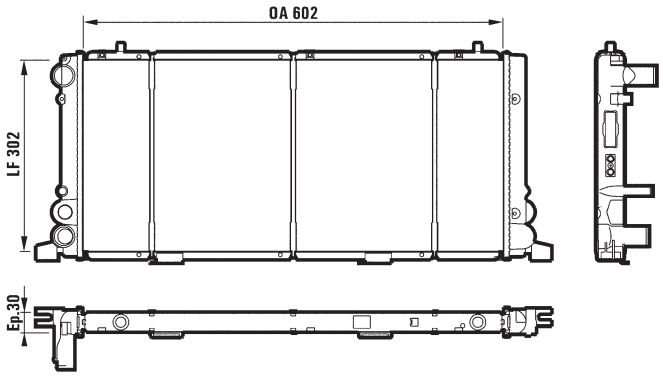


| | | |
|---|---|---|
| AUDI 443121253E | 602x302x30 | 32mm L |
| | - | 32mm L |

## 730360 TA607 ALM

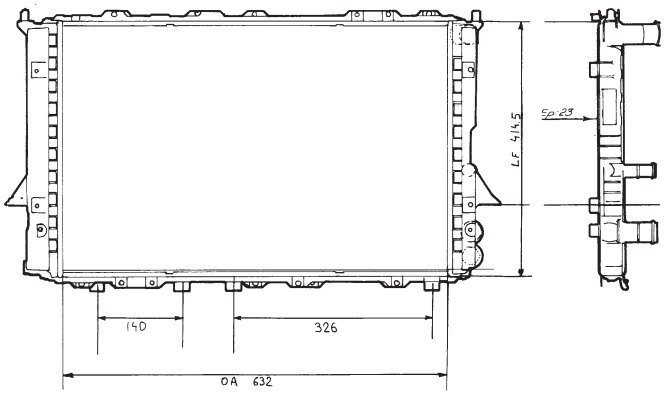


| | | |
|---|---|---|
| AUDI 4A0121251E | 632x414x23 | 32mm L |
| | - | 32mm L |

## 730361 TA608 ALM

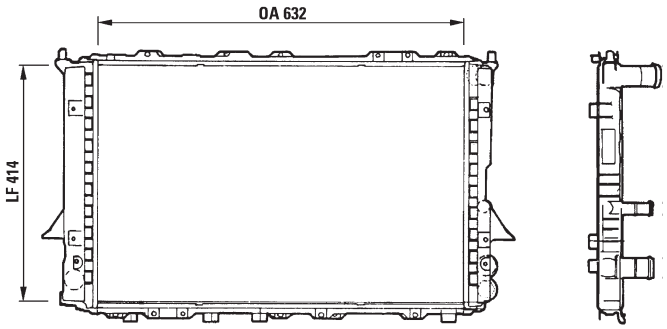


| | | |
|---|---|---|
| AUDI 4A0121251A | 632x414x34 | 32mm L |
| | - | 32mm L |

## 730362 TA609 ALM

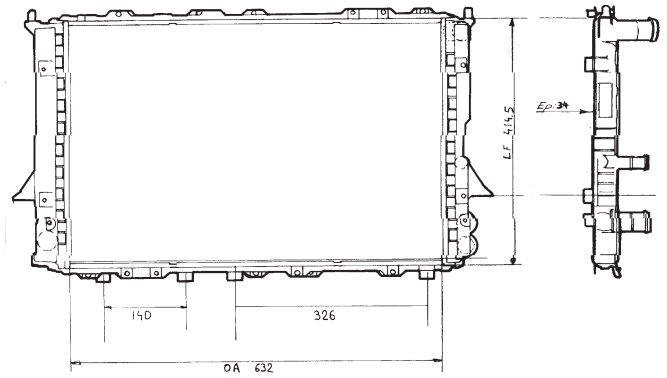


| | | |
|---|---|---|
| AUDI 4A0121251H | 632x414x34 | 32mm L |
| | - | 32mm L |

## 730363 TA891 ALM

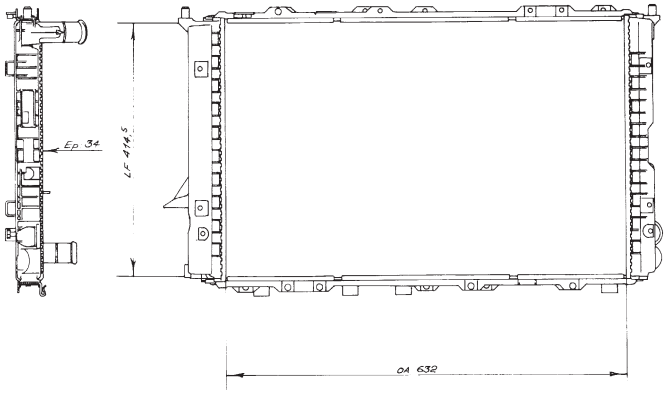


| | | |
|---|---|---|
| AUDI 4A0121251K | 632x414x34 | 32mm L |
| | - | 32mm L |

## 730365 RAB032 ALM

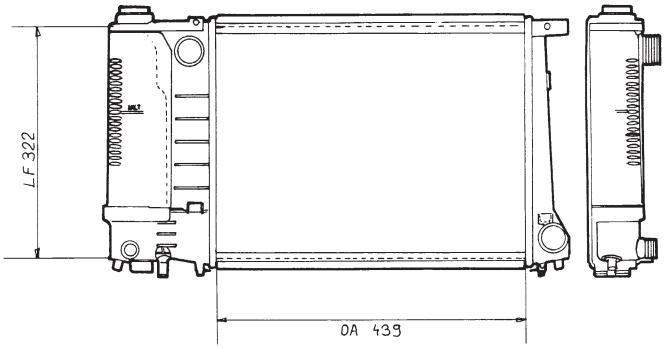


| | | |
|---|---|---|
| BMW 17111712982 | 439x322x34 | 40mm L |
| | - | 40mm L |

## 730372 TA519 ALM

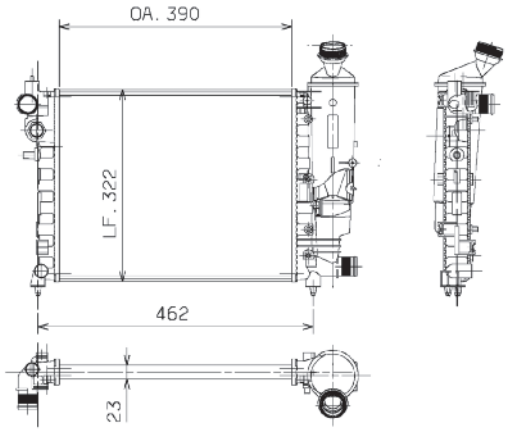


| | | |
|---|---|---|
| PEUGEOT 1301B0 | 390x322x23 | 32mm L |
| | - | 32mm L |

## 730368 RA662 ALB

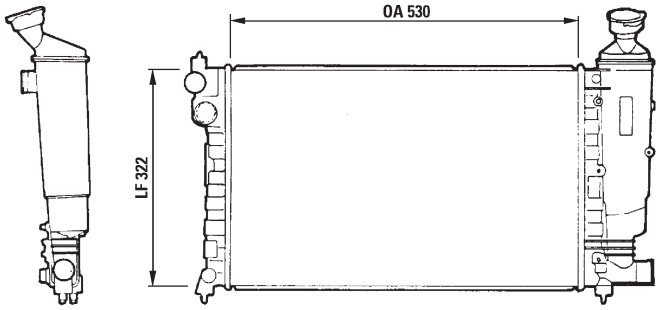


| | | |
|---|---|---|
| PEUGEOT 1301D0 | 530x322x26, 5 | 32mm L |
| | - | 32mm L |

## 730375 CBS

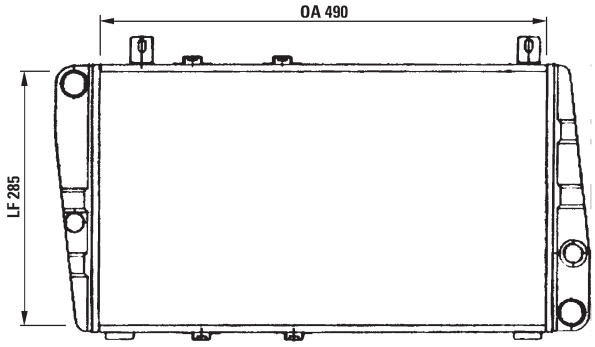


| | | |
|---|---|---|
| SKODA 113610500 | 490x285x34 | 30mm L |
| | - | 30mm L |

## 730370 TA407 ALM

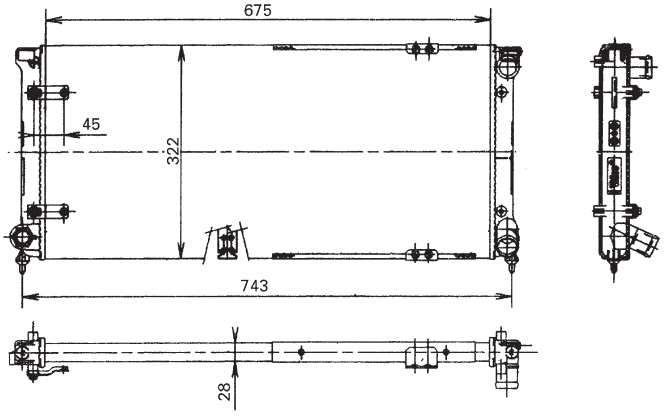


| | | |
|---|---|---|
| SEAT 1L0121251 | 675x322x28 | 32mm L |
| | - | 32mm L |

## 730395 RM1743 CBS

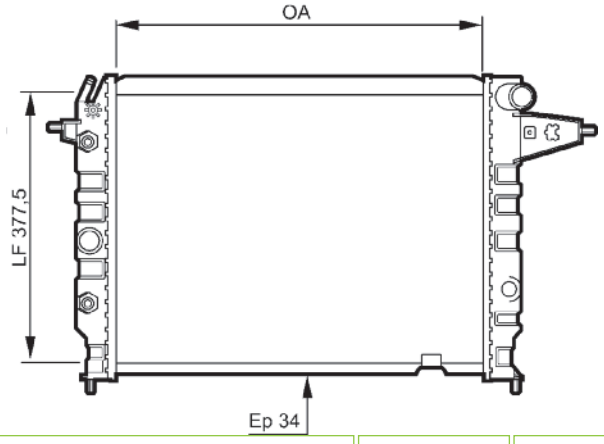


| | | |
|---|---|---|
| OPEL 1300122<br>VAUXHALL 90443466 | 540x377,5x34 | 34mm L |
| | + | 34mm L |

## 730396 RM1507 ALB

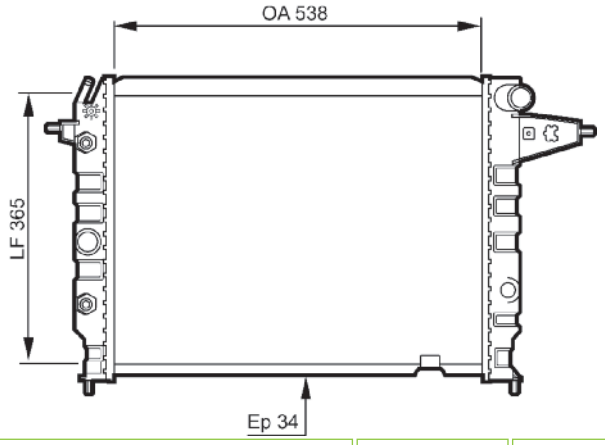


| | | |
|---|---|---|
| OPEL 1300084<br>VAUXHALL 3096385 | 538x365x34 | 34mm L |
| | | 34mm L |

## 730406 CBS

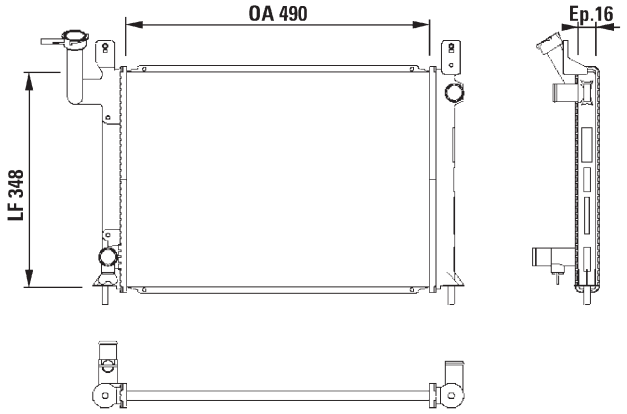


| | | |
|---|---|---|
| NISSAN 2141077A00 | 490x348x16 | 28mm L |
| | | 28mm L |

## 730397 CBS

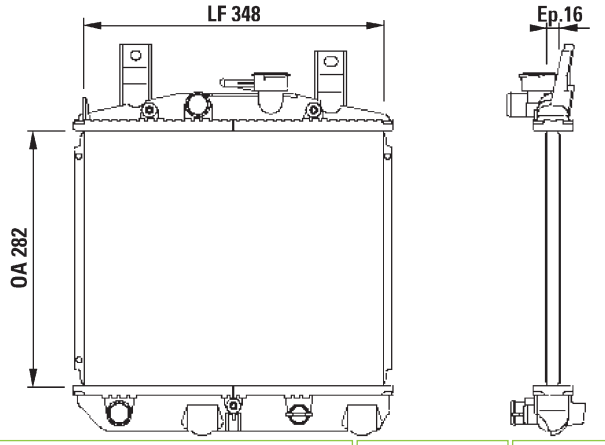


| | | |
|---|---|---|
| DAIHATSU 1640087218000 | 282x348x16 | 25mm L |
| | | 25mm L |

## 730407 CBS

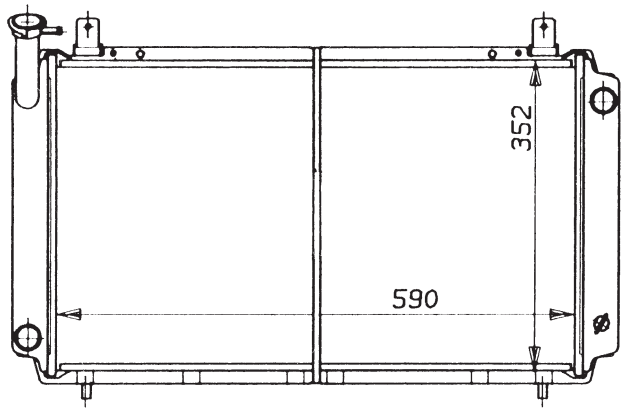


| | | |
|---|---|---|
| NISSAN 2141083A00 | 500x349x16 | 28mm L |
| | | 28mm L |

## 730404 CBS

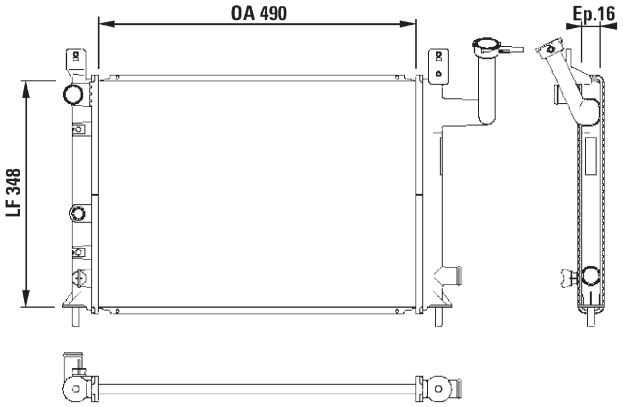


| | | |
|---|---|---|
| NISSAN 2141050A11 | 490x348x16 | 28mm L |
| | | 28mm L |

## 730408 CBS

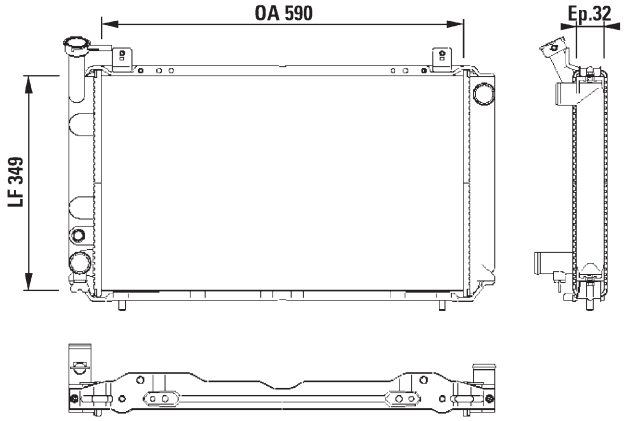


| | | |
|---|---|---|
| NISSAN 2141054A00 | 590x349x32 | 35mm L |
| | | 35mm L |

## 730417 CBS

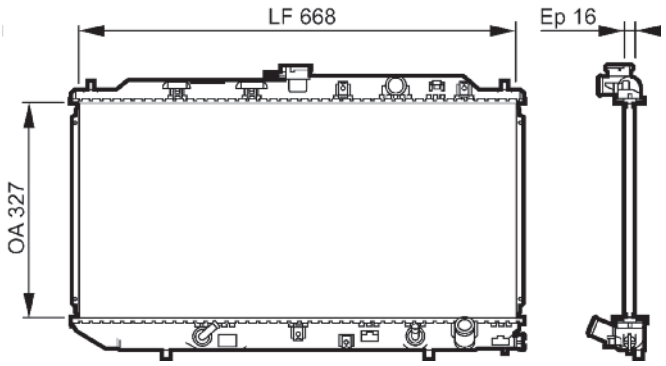


| | | | |
|---|---|---|---|
| HONDA | 19010PM3901 | 327x668x16 | 28mm L |
| | | + | 28mm L |

## 730429 CBS

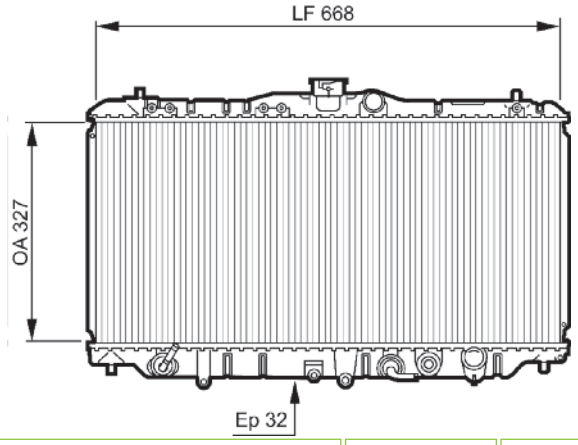


| | | | |
|---|---|---|---|
| HONDA | 19010PK3A54 | 327x668x32 | 32mm L |
| | | + | 32mm L |

## 730423 CBS

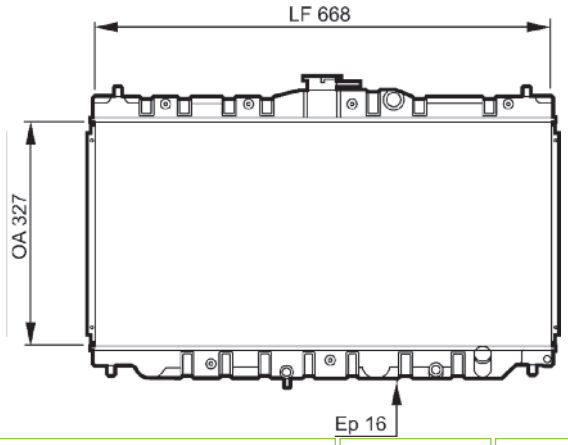


| | | | |
|---|---|---|---|
| HONDA | 19010PH1635 | 327x688x16 | 28mm L |
| | | - | 28mm L |

## 730430 CBS

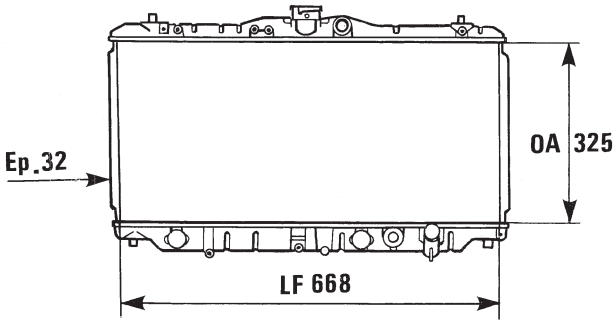


| | | | |
|---|---|---|---|
| HONDA | 19010PK2752 | 325x668x32 | 32mm L |
| | | - | 32mm L |

## 730424 CBS

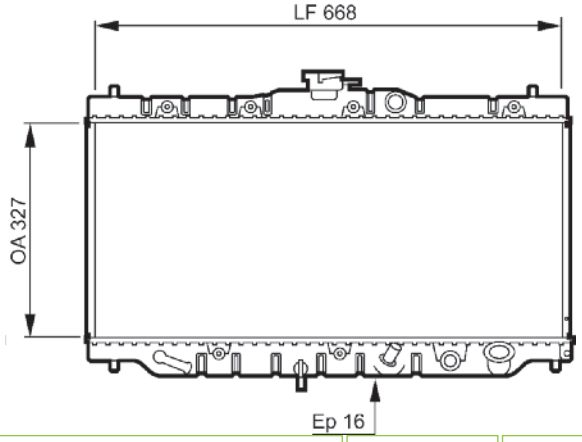


| | | | |
|---|---|---|---|
| HONDA | 19010PH4A12 | 327x668x16 | 28mm L |
| | | + | 28mm L |

## 730436 CBS

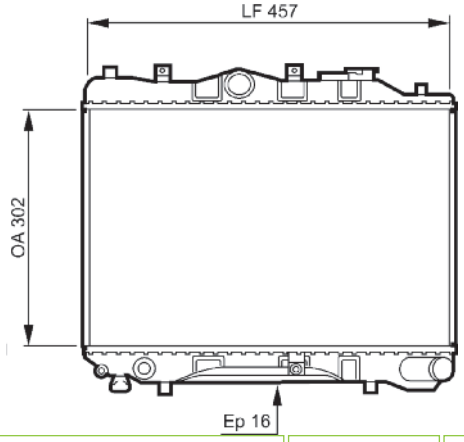


| | | | |
|---|---|---|---|
| MAZDA | E35615200A | 302x457x16 | 35mm L |
| | | - | 35mm L |

## 730437 CBS

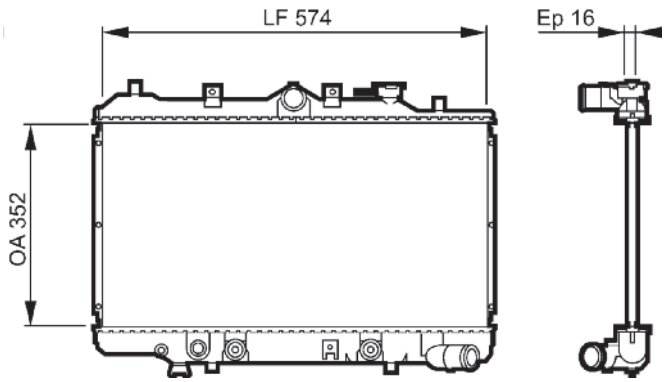


| | | |
|---|---|---|
| MAZDA B31615200 | 352x574x16 | 35mm L |
| | + | 35mm L |

## 730454 CBS

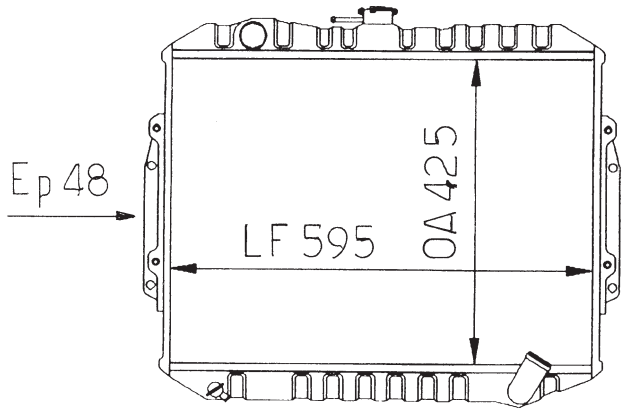


| | | |
|---|---|---|
| MITSUBISHI MB356156 | 425x595x48 | 35mm L |
| | - | 35mm L |

## 730440 CBS

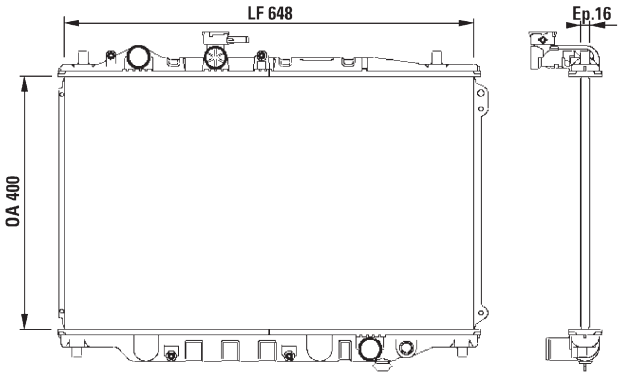


| | | |
|---|---|---|
| MAZDA F8C115200 | 400x648x16 | 35mm L |
| | - | 35mm L |

## 730456 CBS

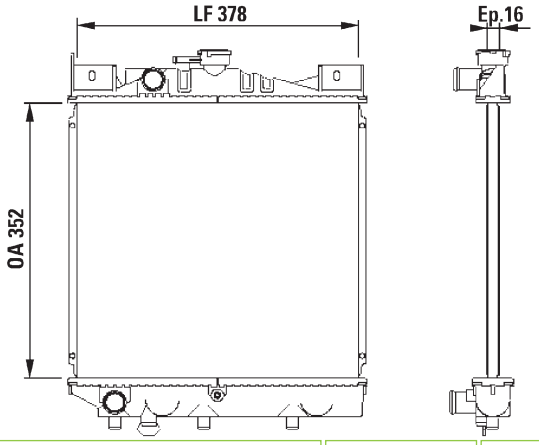


| | | |
|---|---|---|
| SUZUKI 1770082022 | 352x378x16 | |
| | - | 28mm L |

## 730449 ALB

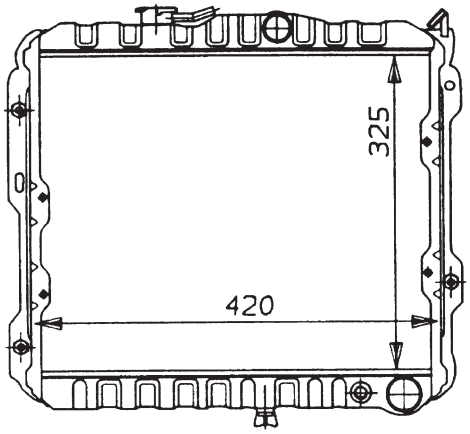


| | | |
|---|---|---|
| MITSUBISHI MB222073 | 325x420x16 | 28mm L |
| | - | 35mm L |

## 730468 CBS

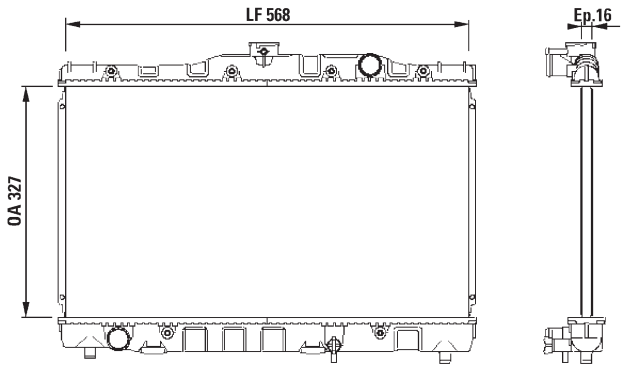


| | | |
|---|---|---|
| TOYOTA 1640014060 | 327x568x16 | 31mm L |
| | - | 31mm L |

## 730469 CBS

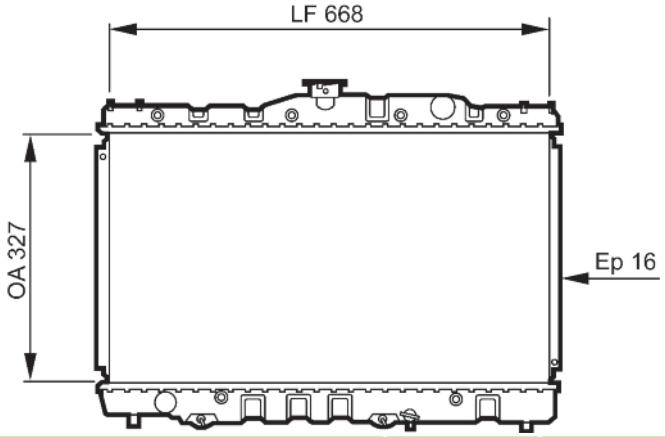


| | | |
|---|---|---|
| TOYOTA 1640015200 | 327x668x16 | 31mm L |
| + | | 31mm L |

## 730483 TA821 ALM

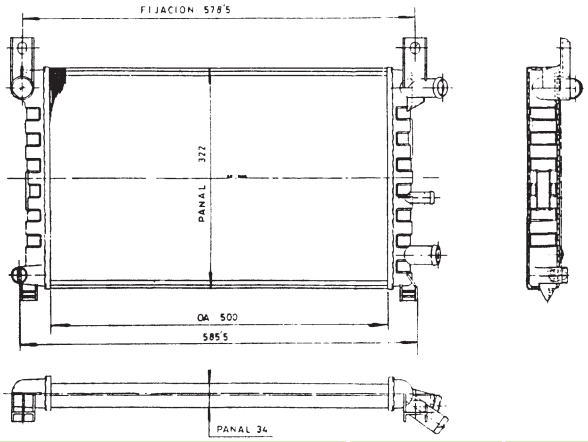


| | | |
|---|---|---|
| FORD 1654321 | 500x322x34 | 25mm L |
| - | | 27mm L |

## 730470 CBS

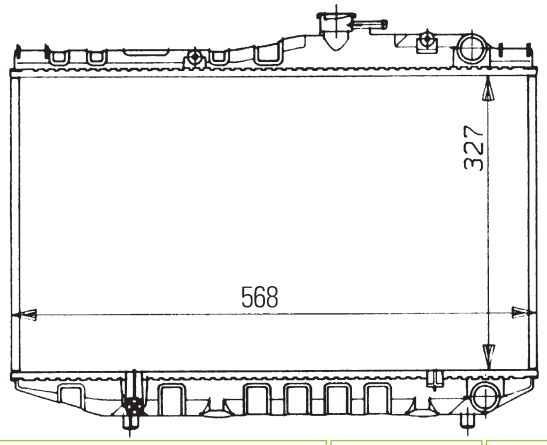


| | | |
|---|---|---|
| TOYOTA 1640015210 | 327x568x16 | 31mm L |
| - | | 31mm L |

## 730484 TA822 ALM

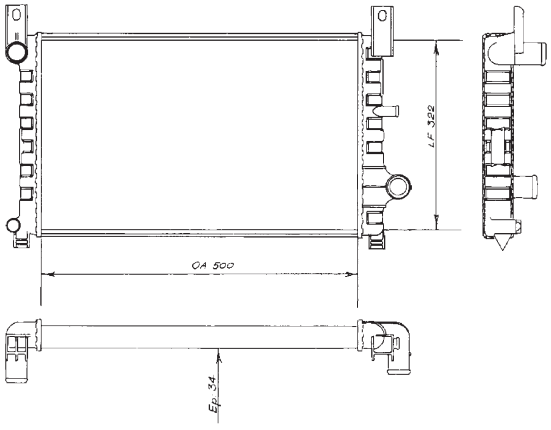


| | | |
|---|---|---|
| FORD 7138824 | 500x322x34 | 35mm L |
| - | | 35mm L |

## 730471 CBS

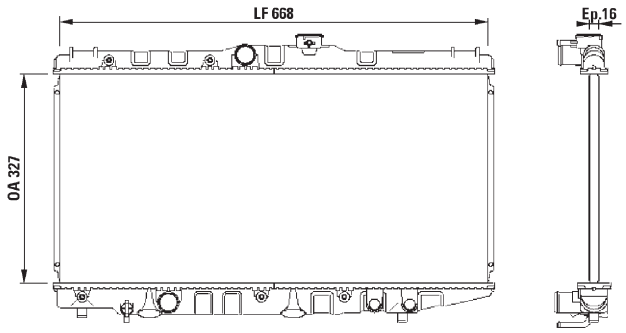


| | | |
|---|---|---|
| TOYOTA 1640016330 | 327x668x16 | 31mm L |
| - | | 31mm L |

## 730491 TA625 ALM

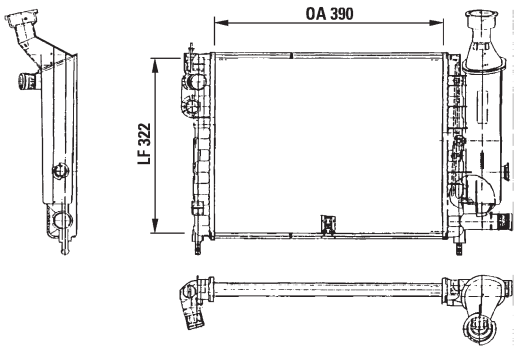


| | | |
|---|---|---|
| CITROEN 96082116 | 390x322x23 | 28mm L |
| - | | 28mm L |

## 730498 RA824 ALB

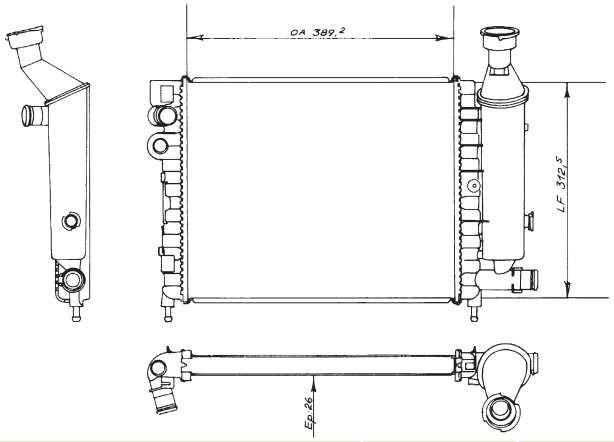


| | | |
|---|---|---|
| CITROEN 96140587 | 389x312,5x26, 5 | 28mm L |
| | | 28mm L |

## 730503 TA650 ALM

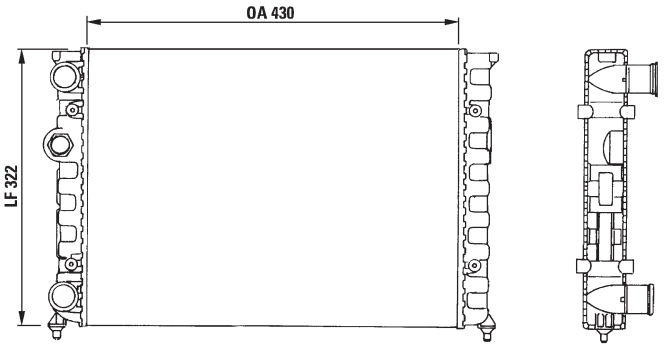


| | | |
|---|---|---|
| VOLKSWAGEN 6N0121253B | 430x322x34 | 32mm L |
| | | 32mm L |

## 730499 TA664 ALM

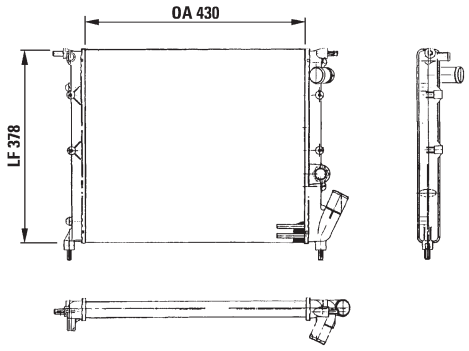


| | | |
|---|---|---|
| RENAULT 7701047888 | 430x377,5x32 | 32mm L |
| | | 32mm L |

## 730504 TA881 ALM

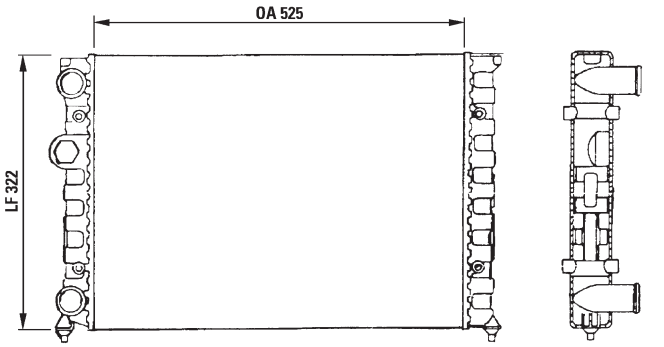


| | | |
|---|---|---|
| VOLKSWAGEN 6N0121253 | 525x322x34 | 32mm L |
| | | 32mm L |

## 730502 RAB004 ALB

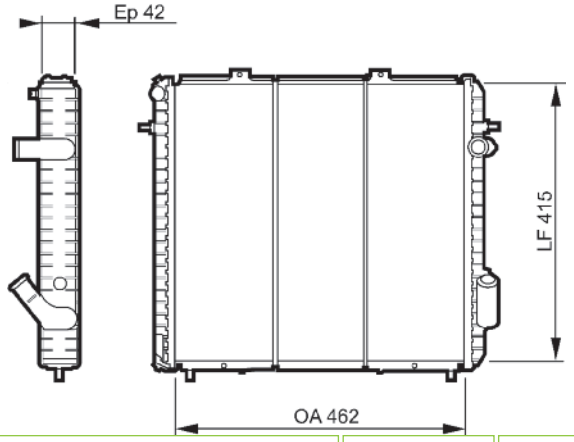


| | | |
|---|---|---|
| RENAULT 6006000712 | 462x415x42 | 32mm L |
| | | 32mm L |

## 730505 TA651 ALM

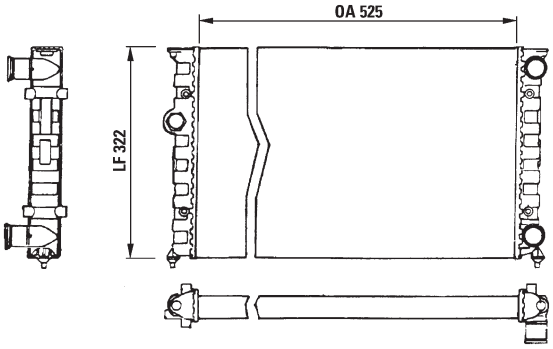


| | | |
|---|---|---|
| VOLKSWAGEN 1H0121253R | 525x322x34 | 32mm L |
| | | 32mm L |

## 730507 RM1516 ALM

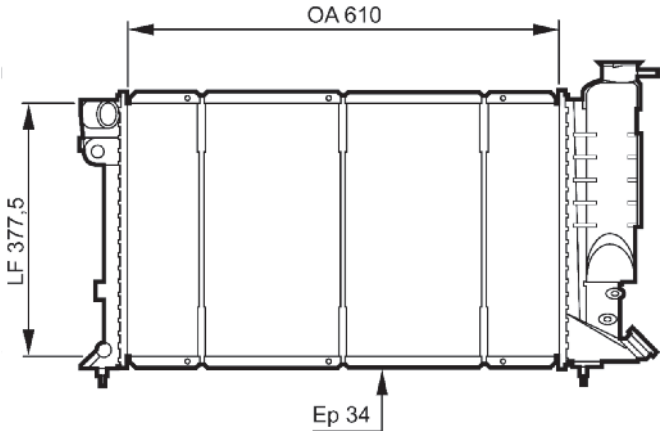


| | | | |
|---|---|---|---|
| CITROEN 96050671 | 610x377,5x34 | 40mm L | |
| | | 40mm QC | |

## 730508 RM1722 ALM

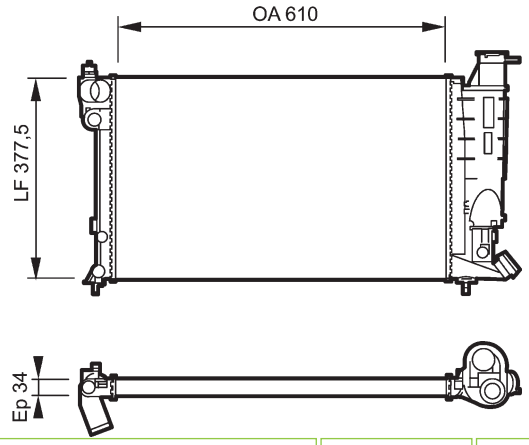


| | | | |
|---|---|---|---|
| CITROEN 96055582 | 610x377,5x34 | 40mm L | |
| | | 40mm QC | |

## 730510 RA779 ALB

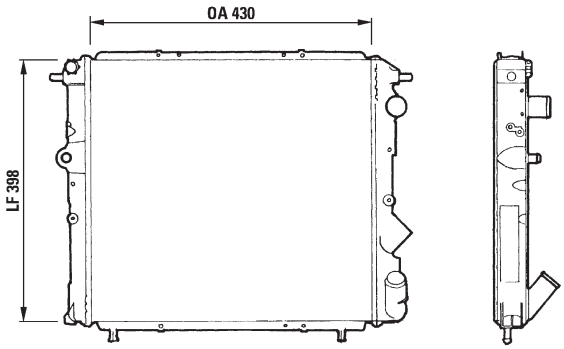


| | | | |
|---|---|---|---|
| RENAULT 7700811808 | 430x398x34, 5 | 32mm L | |
| | | 32mm L | |

## 730511 CBS

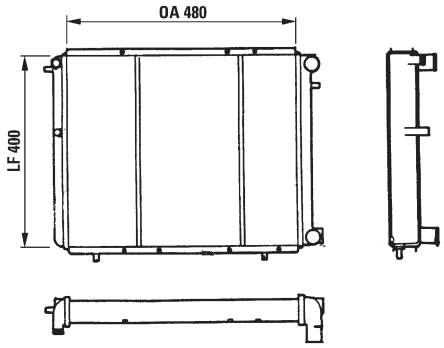


| | | | |
|---|---|---|---|
| RENAULT 7700272527 | 480x400x47 | L | |
| | | L | |

## 730512 TA672 ALM

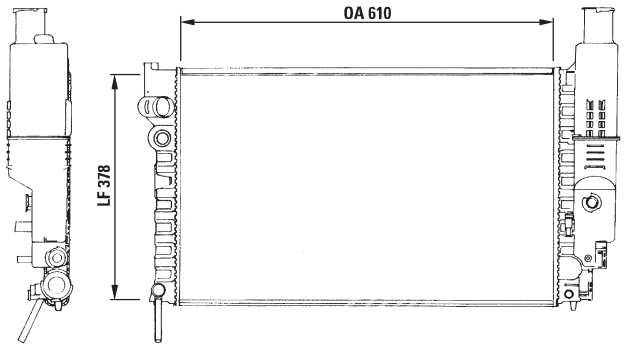


| | | | |
|---|---|---|---|
| PEUGEOT 1301F8 | 610x377,5x23 | 32mm L | |
| | | 32mm L | |

## 730515 RM1024 ALM

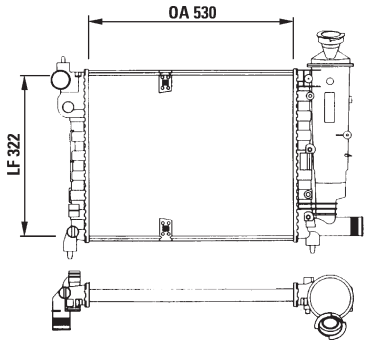


| | | | |
|---|---|---|---|
| PEUGEOT 1301V8 | 530x322x23 | 32mm L | |
| | | 32mm L | |

## 730519 RM162 ALM

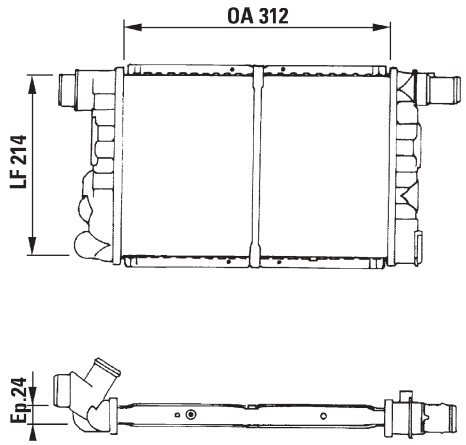


| | | |
|---|---|---|
| FIAT 46521746 | 312x214x34 | |
| | - | |

## 730520 RM161 ALM

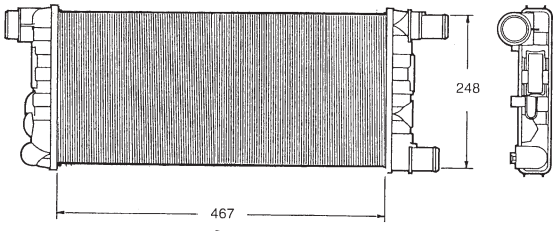


| | | |
|---|---|---|
| FIAT 46783702 | 467x248x34 | |
| | - | |

## 730534 CBS

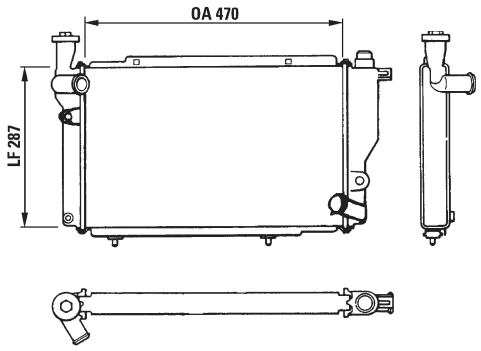


| | | |
|---|---|---|
| PEUGEOT 133034 | 470x287x38 | 32mm L |
| | - | 32mm L |

## 730540 TA633 ALM

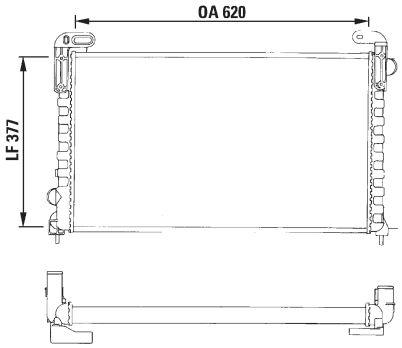


| | | |
|---|---|---|
| RENAULT 7701035718 | 620x377,5x34 | 32mm L |
| | - | 32mm L |

## 730542 RM1737 ALM

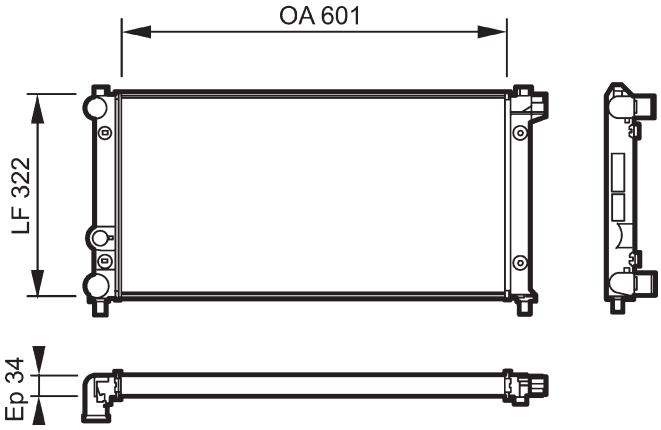


| | | |
|---|---|---|
| SEAT SE021117002B | 601x322x34 | 32mm L |
| | - | 32mm L |

## 730548 RA2001 ALB

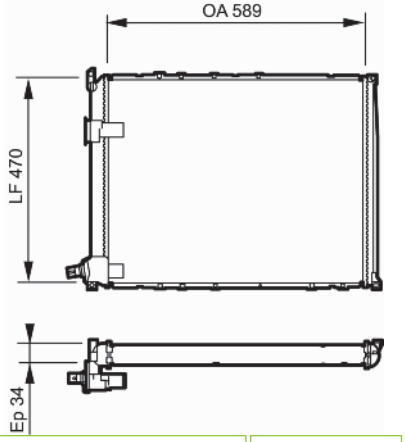


| | | |
|---|---|---|
| RENAULT 7701352201 | 589x470x34 | 32mm L |
| | - | 32mm L |

## 730549 RA821 ALB

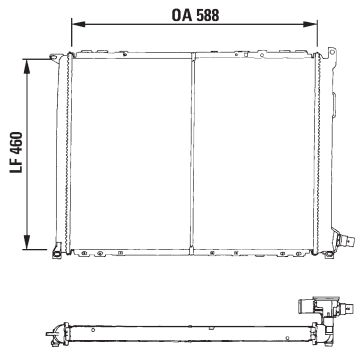


| | | |
|---|---|---|
| RENAULT 7701352204 | 588x460x34, 5 | 32mm L |
| | | 32mm L |

## 730565 RM1174 ALM

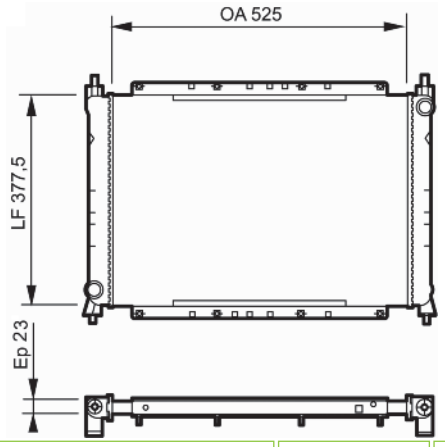


| | | |
|---|---|---|
| HONDA 19010SK4E00<br>ROVER GRD125 | 525x377,5x23 | 28mm L |
| | | 28mm L |

## 730551 RM1166 ALM

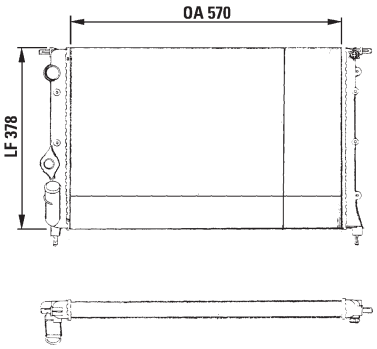


| | | |
|---|---|---|
| RENAULT 7701047889 | 570x378x23 | 32mm L |
| | | 32mm L |

## 730569 TA876 ALM

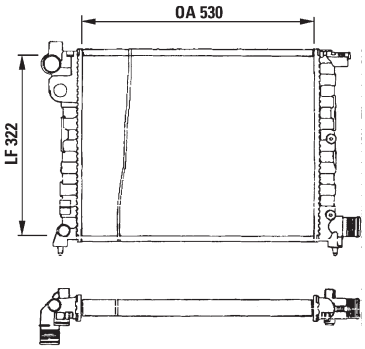


| | | |
|---|---|---|
| PEUGEOT 1301L5 | 530x322x23 | 32mm L |
| | | 32mm L |

## 730563 CBS

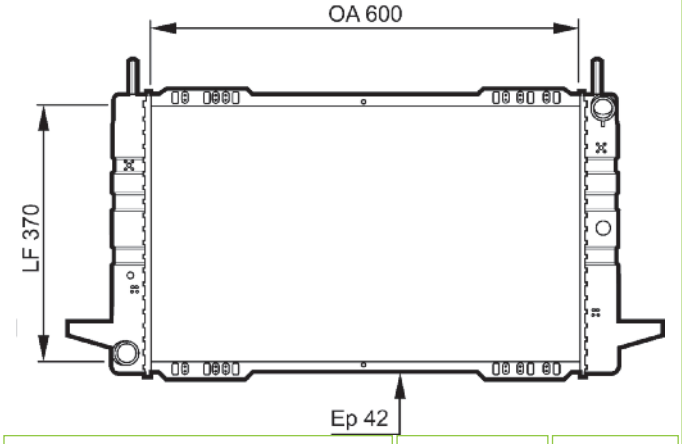


| | | |
|---|---|---|
| FORD 7139160 | 600x370x42 | L |
| | | L |

## 730572 TA643 ALM

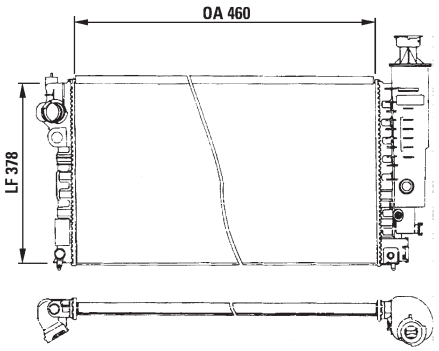


| | | |
|---|---|---|
| PEUGEOT 1301E6 | 460x377,5x23 | QC |
| | | QC |

## 730575 TA878 ALM

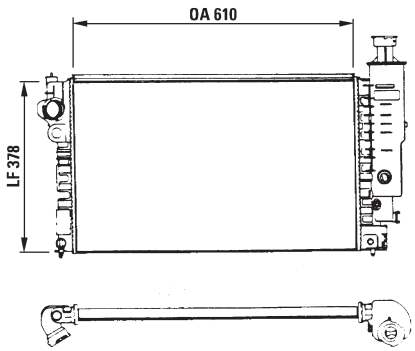


| | | |
|---|---|---|
| PEUGEOT 1301JQ | 610x377,5x23 | QC |
| | | QC |

## 730590 CBS

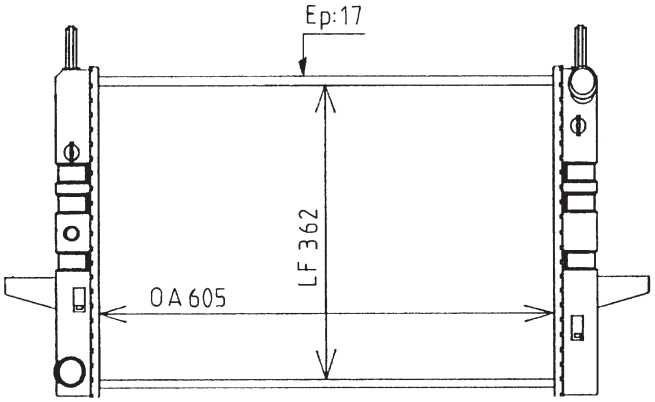


| | | |
|---|---|---|
| FORD 6186886 | 605x362x17 | 34mm L |
| | | 34mm L |

## 730577 RM001 ALM

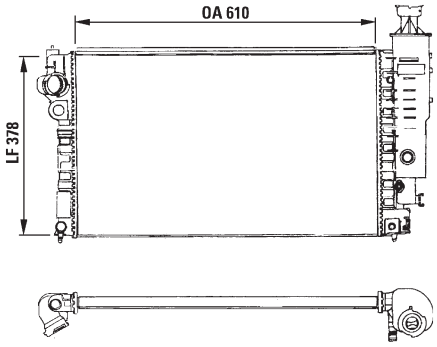


| | | |
|---|---|---|
| PEUGEOT 1301G8 | 610x377,5x23 | QC |
| | | QC |

## 730591 CBS

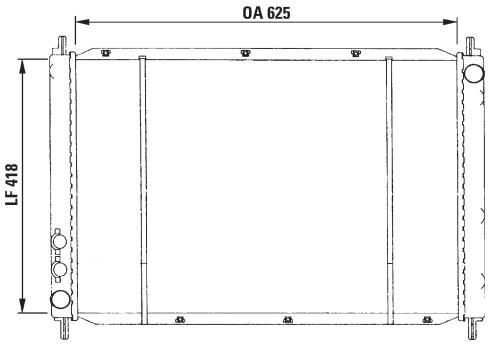


| | | |
|---|---|---|
| HONDA 19010PN7750<br>ROVER GRD135 | 625x418x17 | 32mm L |
| | | 32mm L |

## 730589 CBS

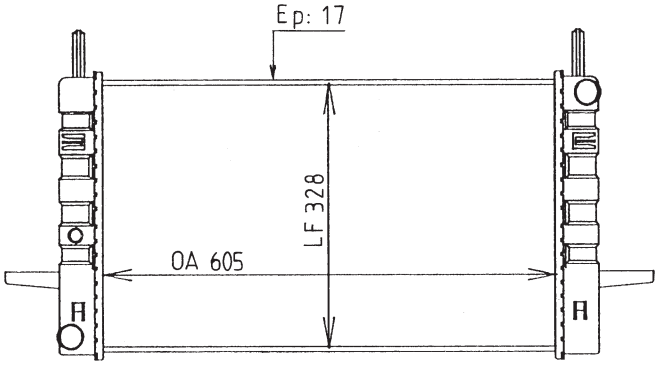


| | | |
|---|---|---|
| FORD 1106758 | 605x328x17 | 35mm L |
| | | 34mm L |

## 730595 RM1149 ALM

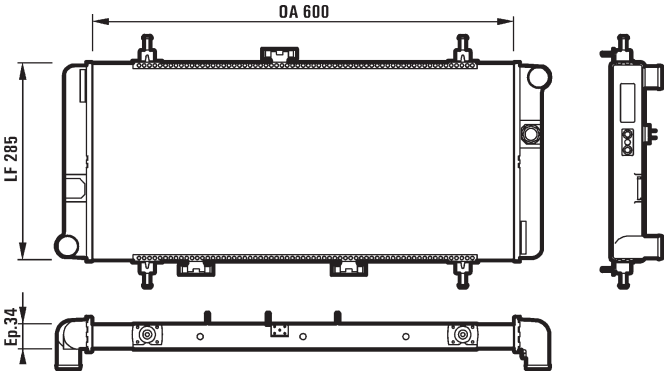


| | | |
|---|---|---|
| ROVER GRD133 | 600x285x34 | 32mm L |
| | | 32mm L |

## 730629 TA676 ALM

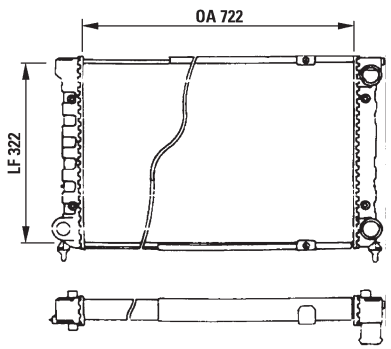


| | | |
|---|---|---|
| VOLKSWAGEN 357121253AB | 722x322x34 | 32mm L |
| | | 32mm L |

## 730633 TA656 ALM

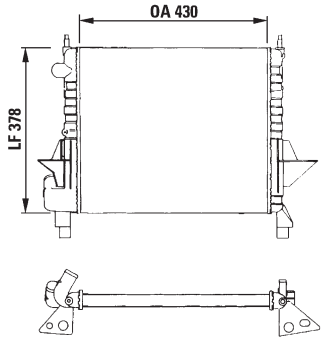


| | | |
|---|---|---|
| RENAULT 7701036152 | 430x377,5x28 | 32mm L |
| | | 32mm L |

## 730630 RM007 ALM

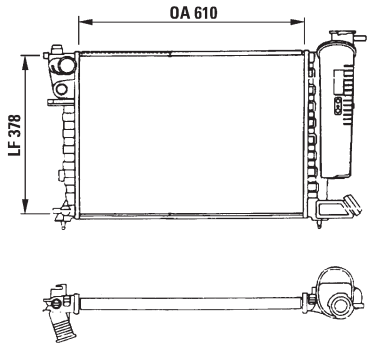


| | | |
|---|---|---|
| CITROEN 1301TH<br>PEUGEOT 1331CS | 610x377,5x23 | 40mm L |
| | | 40mm QC |

## 730634 RM1752 CBS

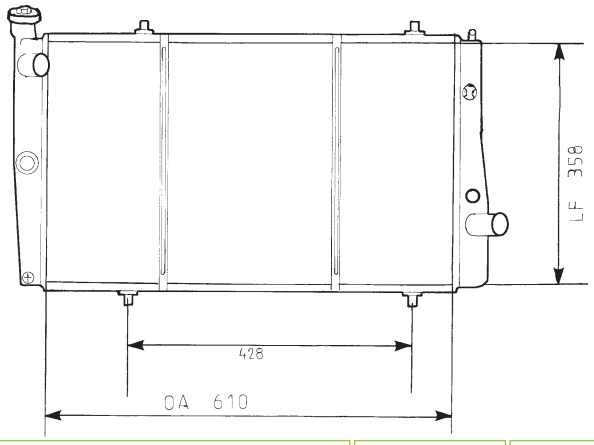


| | | |
|---|---|---|
| LADA 212151301012<br>PEUGEOT 1301R7 | 610x358x24 | 32mm L |
| | | 32mm L |

## 730632 TA828 ALM

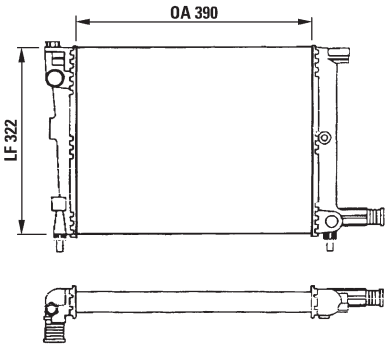


| | | |
|---|---|---|
| CITROEN 96172131 | 390x322x32 | L |
| | | L |

## 730635 CBS

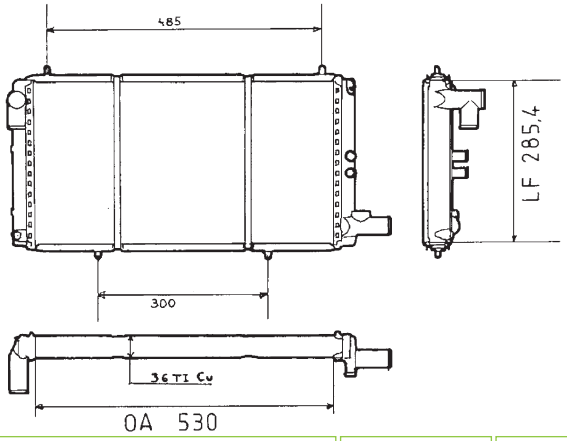


| | | |
|---|---|---|
| CITROEN 95636832 | 530x286x36 | 32mm L |
| | | 32mm L |

## 730838 RA2040 ALB

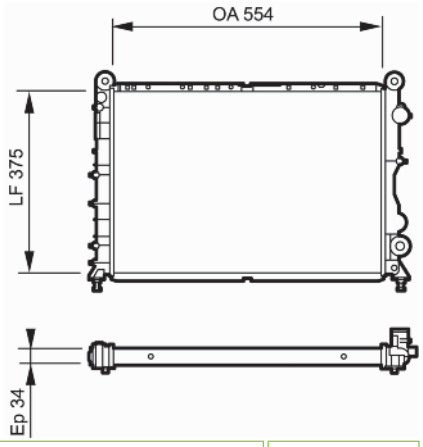


| | | |
|---|---|---|
| FIAT 82461146<br>LANCIA 82461146 | 554x374,2x35 | 35mm L |
| | | 35mm L |

## 730883 CBS

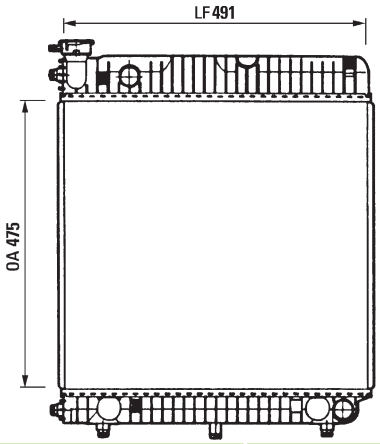


| | | |
|---|---|---|
| MERCEDES 6015008103 | 475x491x34 | 35mm L |
| | | 35mm L |

## 730856 RM1731 ALM

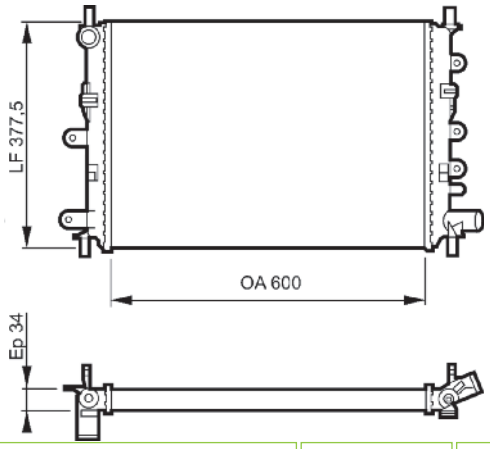


| | | |
|---|---|---|
| FORD 6912233 | 600x377,5x34 | 35mm L |
| | | 35mm L |

## 730897 CBS

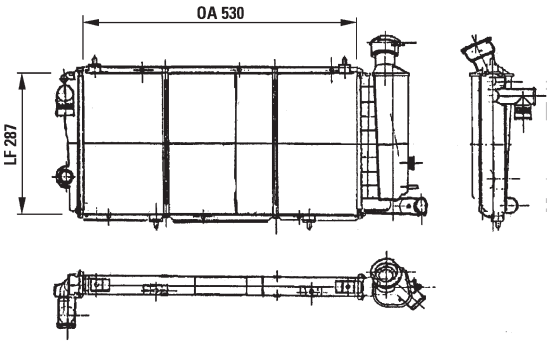


| | | |
|---|---|---|
| CITROEN 96148094 | 530x287x35 | 32mm L |
| | | 32mm L |

## 730857 RM1100 ALM

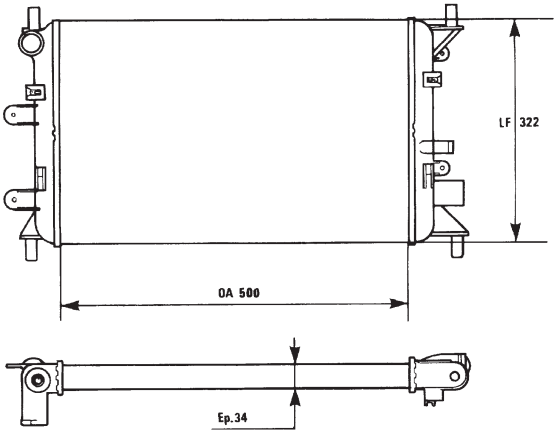


| | | |
|---|---|---|
| FORD 6912232 | 500x322x34 | 35mm L |
| | | 35mm L |

## 730898 CBS

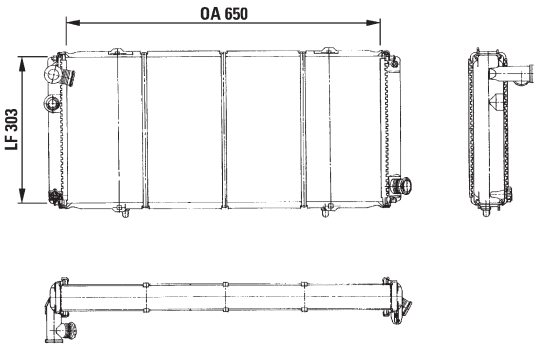


| | | |
|---|---|---|
| PEUGEOT 1301C1 | 650x303x55 | 32mm L |
| | | 32mm L |

## 730927 RM002 ALM

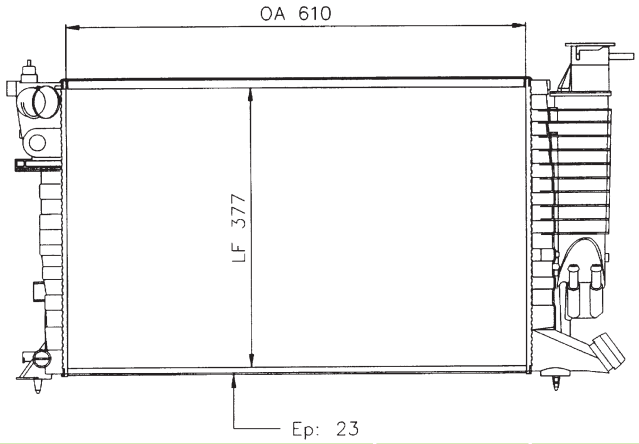


| | | | |
|---|---|---|---|
| CITROEN 1331RY<br>PEUGEOT 1331RY | 610x377,5x23 | 40mm L | |
| | – | 40mm QC | |

## 730945 TA823 ALM

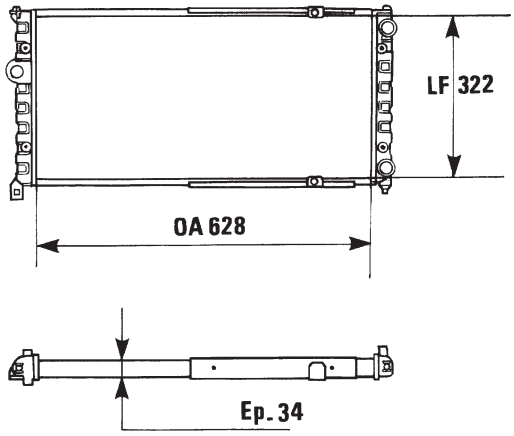


| | | | |
|---|---|---|---|
| SEAT 6K0121253A<br>VOLKSWAGEN 6K0121253A | 628x322x34 | 32mm L | |
| | – | 32mm L | |

## 730934 TA890 ALM

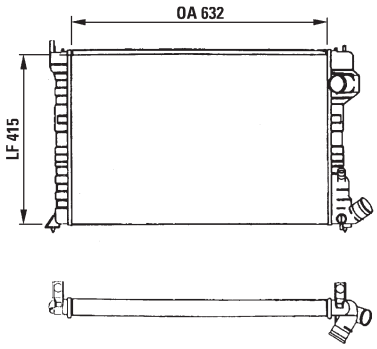


| | | | |
|---|---|---|---|
| CITROEN 133002<br>PEUGEOT 133002 | 632x414,5x34 | 40mm L | |
| | – | 40mm L | |

## 730946 TA824 ALM

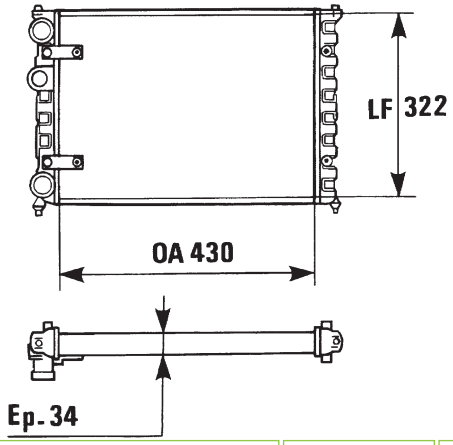


| | | | |
|---|---|---|---|
| SEAT 6K0121253J<br>VOLKSWAGEN 6K0121253J | 430x322x34 | 32mm L | |
| | – | 32mm L | |

## 730944 CBS

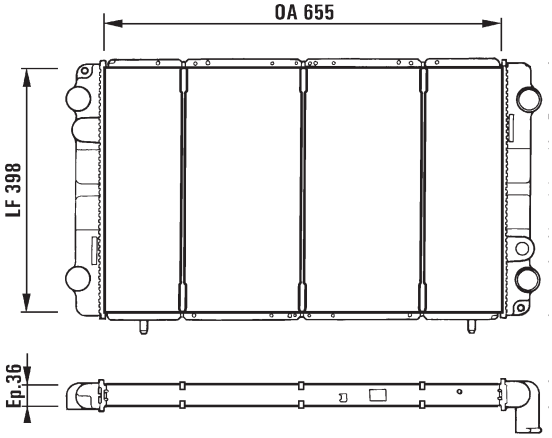


| | | | |
|---|---|---|---|
| OPEL 4401893<br>RENAULT 7700741216<br>VAUXHALL 9109893 | 655x398x36 | 37mm L | |
| | – | 37mm L | |

## 730947 RM1091 ALM

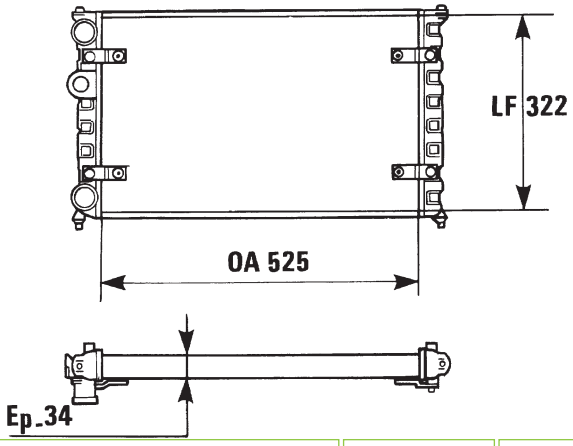


| | | | |
|---|---|---|---|
| SEAT 6K0121253K<br>VOLKSWAGEN 6K0121253K | 525x322x23 | 32mm L | |
| | – | 32mm L | |

## 730948 TA827 ALM

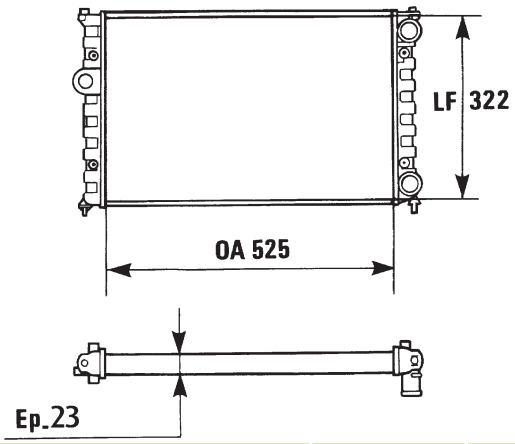


| | | |
|---|---|---|
| SEAT 6K0121253S<br>VOLKSWAGEN 6K0121253S | 525x322x23 | 32mm L |
| | - | 32mm L |

## 730955 RM1032 ALM

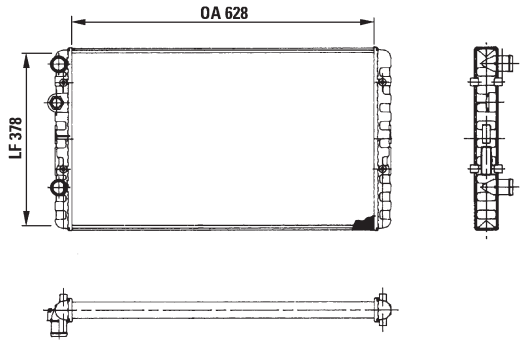


| | | |
|---|---|---|
| VOLKSWAGEN 1H0121253BE | 628x377,5x34 | 32mm L |
| | - | 32mm L |

## 730953 CBS

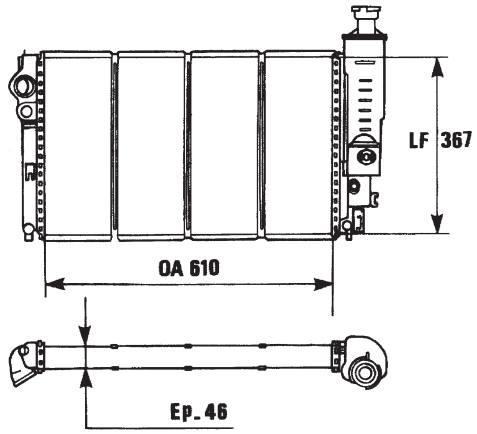


| | | |
|---|---|---|
| PEUGEOT 1301JL | 610x367x46 | 45mm QC |
| | + | 45mm QC |

## 730956 RM1033 ALM

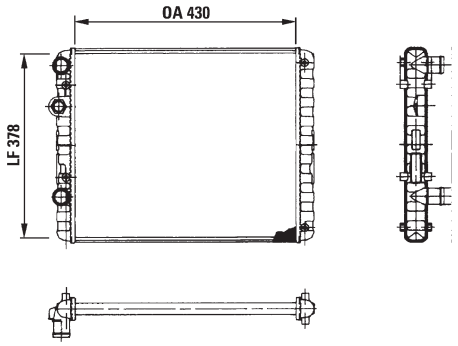


| | | |
|---|---|---|
| SEAT 6N0121253K<br>VOLKSWAGEN 6N0121253K | 430x377,5x23 | 32mm L |
| | - | 32mm L |

## 730954 RM1034 ALM

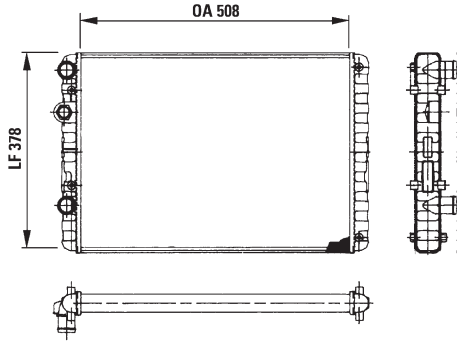


| | | |
|---|---|---|
| SEAT 6N0121253AK<br>VOLKSWAGEN 6N0121253AK | 508x377,5x34 | 32mm L |
| | - | 32mm L |

## 730957 TA663 ALM

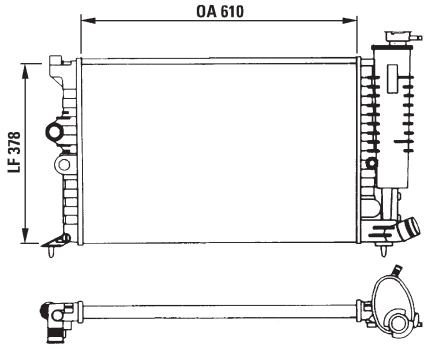


| | | |
|---|---|---|
| CITROEN 96104142 | 610x377,5x23 | L |
| | - | L |

## 730958 RA002 ALB

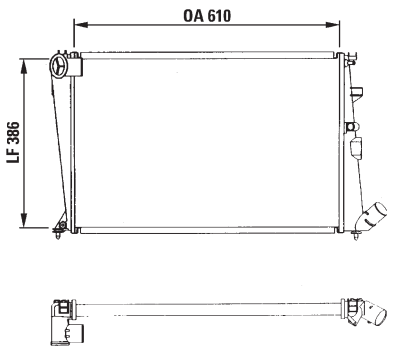


| | | |
|---|---|---|
| CITROEN 1301M7 | 610x386x26, 5 | 40mm L |
| | | 40mm L |

## 730969 CBS

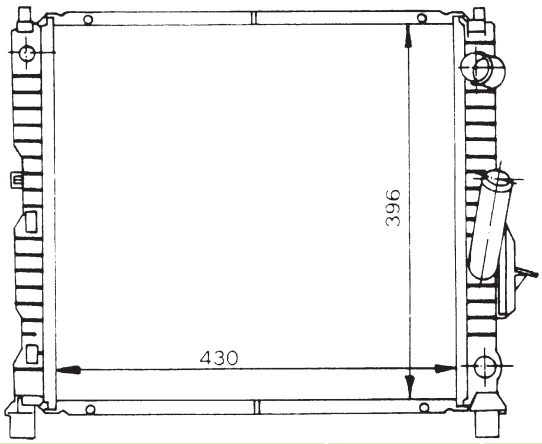


| | | |
|---|---|---|
| RENAULT 7701038688 | 430x396x23 | 32mm L |
| | | 32mm L |

## 730960 TA662 ALM

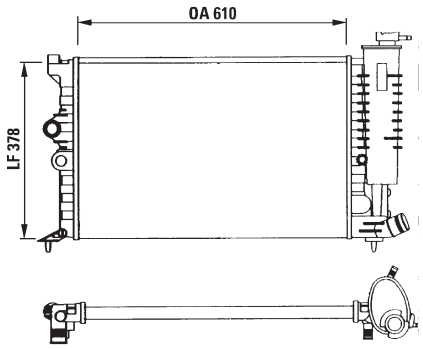


| | | |
|---|---|---|
| CITROEN 96107231 | 610x377,5x23 | 32mm L |
| | | 32mm L |

## 730970 CBS

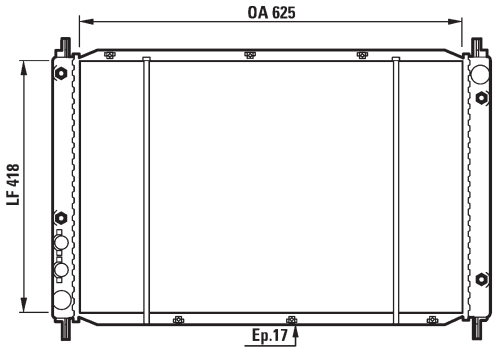


| | | |
|---|---|---|
| HONDA 19010PN7762<br>ROVER GRD138 | 625x418x17 | 32mm L |
| | | 32mm L |

## 730968 CBS

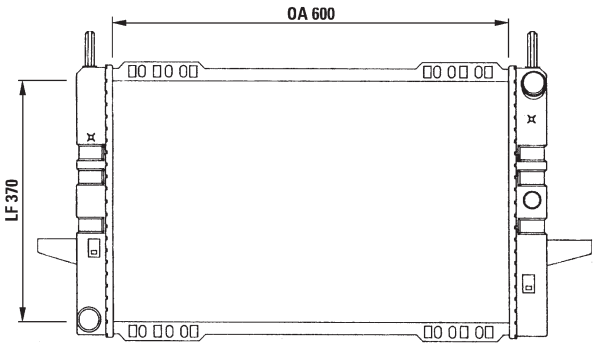


| | | |
|---|---|---|
| FORD 6165438 | 600x370x39 | 34mm L |
| | | 34mm L |

## 730971 TA884 ALM

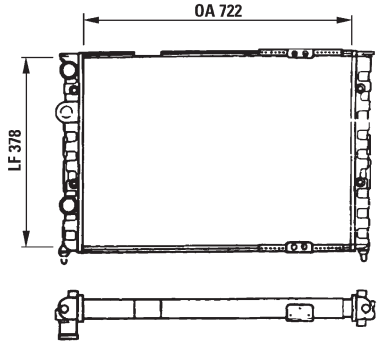


| | | |
|---|---|---|
| VOLKSWAGEN 357121251B | 722x377,5x34 | 32mm L |
| | | 32mm L |

## 730972 TA900 ALM

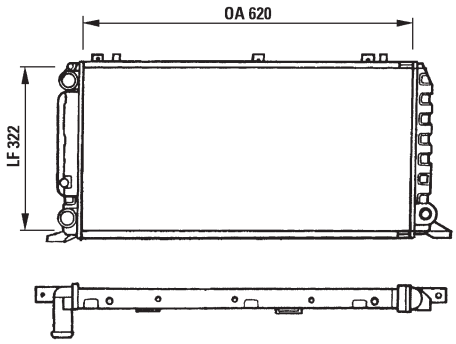


| | | | |
|---|---|---|---|
| AUDI | 893121251H | 620x322x34 | 32mm L |
| | | | 32mm L |

## 730976 RM136 ALM

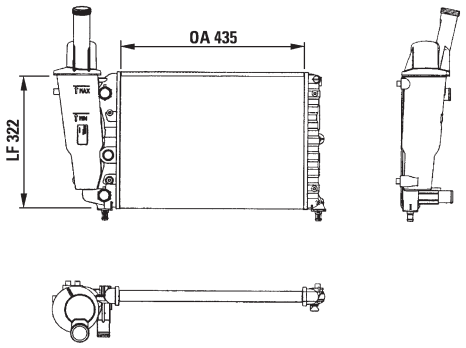


| | | | |
|---|---|---|---|
| FIAT | 46465015 | 435x322x23 | |
| LANCIA | 46465015 | | |

## 730973 RA1509 ALB

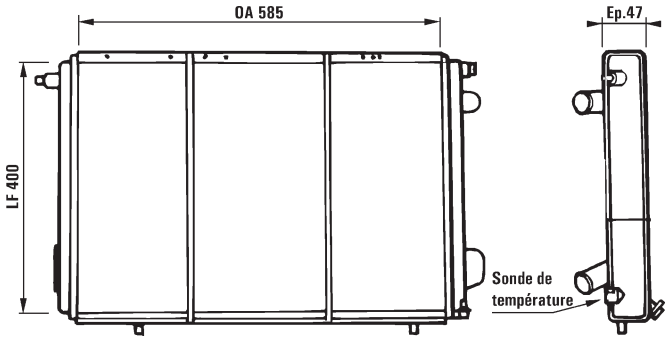


| | | | |
|---|---|---|---|
| ARO | 6001025340 | 585x396x34 | L |
| RENAULT | 6001025340 | | L |

## 730980 RM2027 ALM

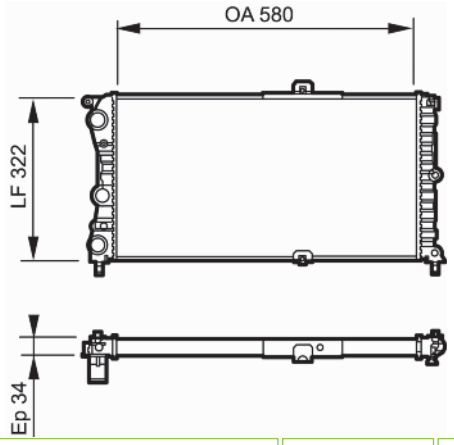


| | | | |
|---|---|---|---|
| FIAT | 7721579 | 580x322x34 | 32mm L |
| | | | 32mm L |

## 730975 RM1005 ALM

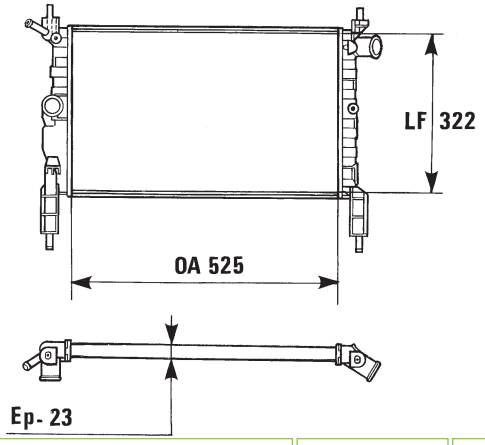


| | | | |
|---|---|---|---|
| OPEL | 1300154 | 525x322x23 | 34mm L |
| VAUXHALL | 90467723 | | 34mm L |

## 730981 RM2028 ALM

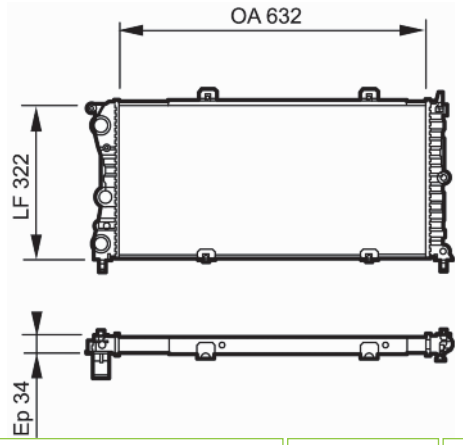


| | | | |
|---|---|---|---|
| FIAT | 71735351 | 632x322x34 | 35mm L |
| | | | 35mm L |

## 730982 RM1749 ALM

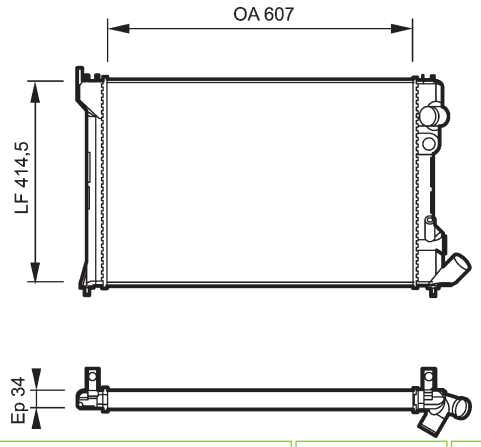


| | | |
|---|---|---|
| CITROEN 1301FY | 607x414,5x34 | 36mm L |
| | | 36mm L |

## 730985 RM1515 ALM

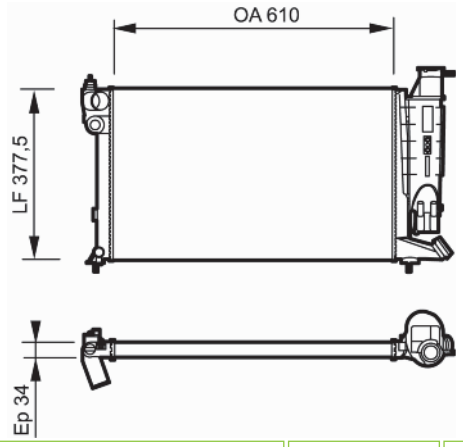


| | | |
|---|---|---|
| CITROEN 1301TK<br>PEUGEOT 1301TK | 610x377,5x34 | 40mm L |
| | | 40mm QC |

## 730983 RM1721 ALM

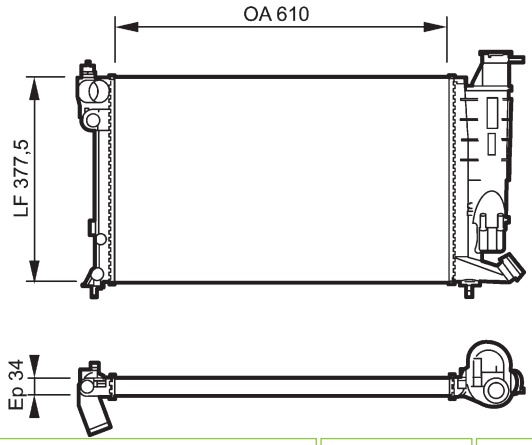


| | | |
|---|---|---|
| CITROEN 1301TL<br>PEUGEOT 1301TL | 610x377,5x34 | 40mm L |
| | | 40mm QC |

## 730990 TA362 ALM

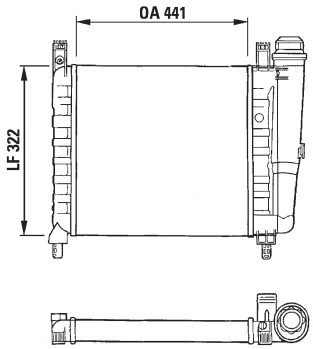


| | | |
|---|---|---|
| FIAT 7652127<br>INNOCENTI 7652127 | 441x322x42 | 35mm L |
| | | 35mm L |

## 730984 RM1514 ALM

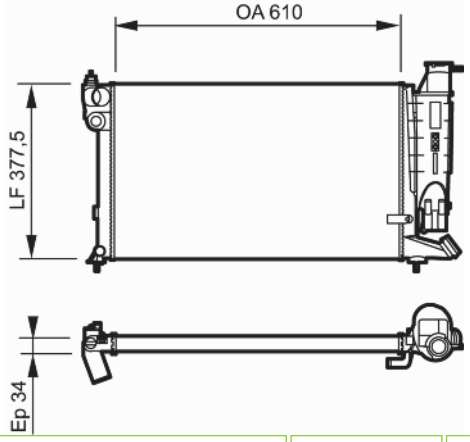


| | | |
|---|---|---|
| PEUGEOT 1301M0 | 610x377,5x34 | 40mm L |
| | | 40mm QC |

## 730991 TA683 ALM

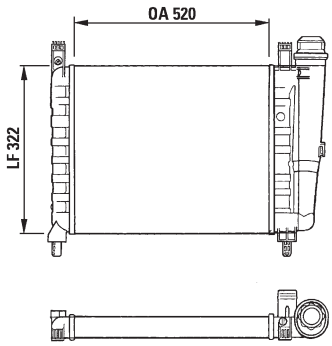


| | | |
|---|---|---|
| FIAT 7685063<br>INNOCENTI 7685063 | 520x322x42 | 35mm L |
| | | 35mm L |

## 730993 RM1506 ALM

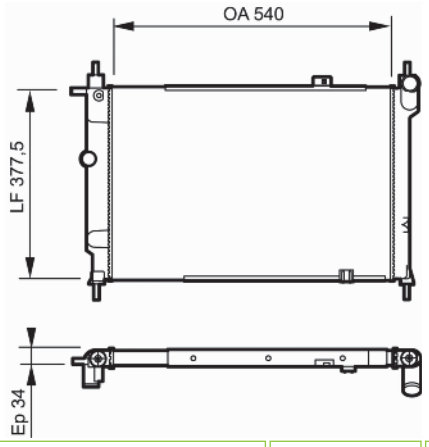


| | | |
|---|---|---|
| OPEL 1300134<br>VAUXHALL 52455043 | 540x377,5x34 | 34mm L |
| | - | 34mm L |

## 730997 RM173 ALM

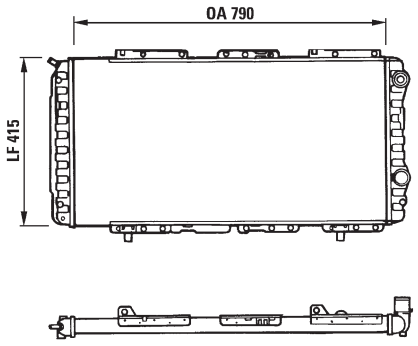


| | | |
|---|---|---|
| CITROEN 1301N3<br>FIAT 1324816080<br>PEUGEOT 1301N3 | 790x414,5x34 | 38mm L |
| | - | 38mm L |

## 730994 RM1742 ALM

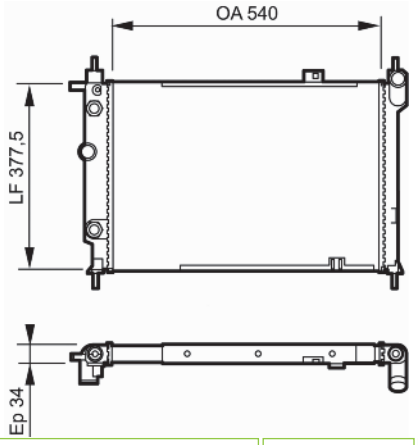


| | | |
|---|---|---|
| OPEL 1300132<br>VAUXHALL 90443392 | 540x377,5x34 | 34mm L |
| | + | 34mm L |

## 730999 RAB053 CBS

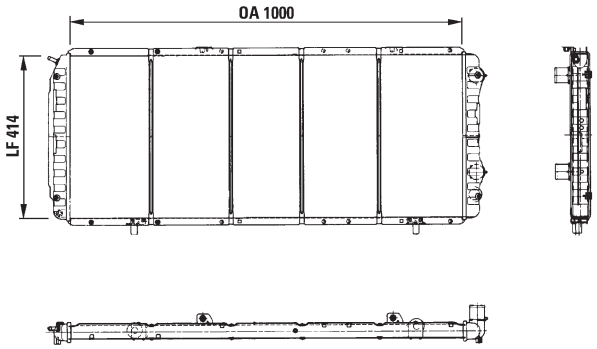


| | | |
|---|---|---|
| CITROEN 1301N6<br>FIAT 1311521080<br>PEUGEOT 1301N6 | 1000x414x35 | 38mm L |
| | - | 38mm L |

## 730995 RM1763 CBS

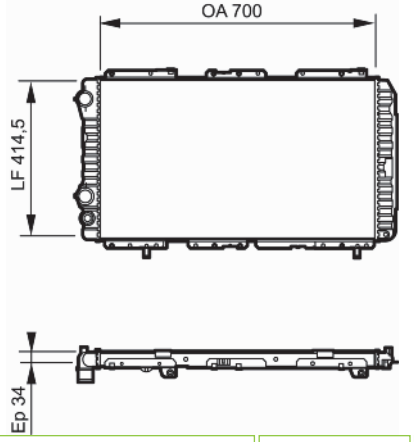


| | | |
|---|---|---|
| FIAT 1307393080<br>PEUGEOT 1301JK | 700x414,5x34 | 38mm L |
| | - | 38mm L |

## 731005 TA885 ALM

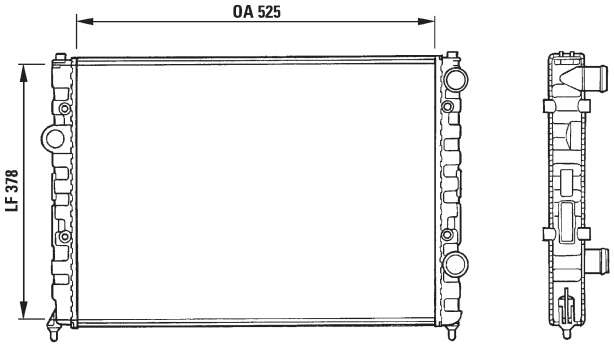


| | | |
|---|---|---|
| VOLKSWAGEN 3A0121253 | 525x377,5x34 | 32mm L |
| | - | 32mm L |

## 731006 TA886 ALM

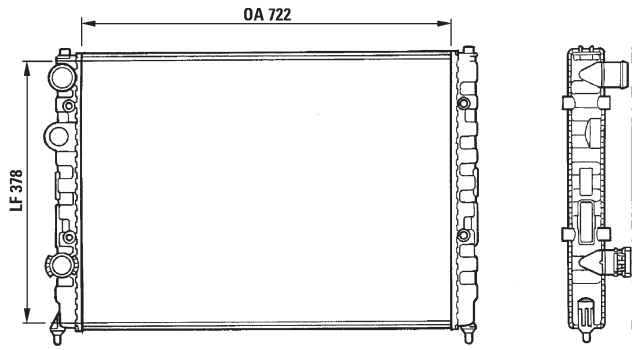


| | | |
|---|---|---|
| VOLKSWAGEN 3A0121253T | 722x377,5x34 | 32mm L |
| | | 32mm L |

## 731007 RM1035 ALM

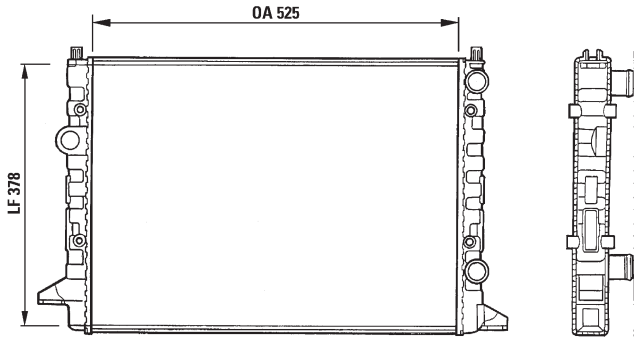


| | | |
|---|---|---|
| VOLKSWAGEN 3A0121253AA | 525x377,5x34 | 32mm L |
| | | 32mm L |

## 731008 RM1036 ALM

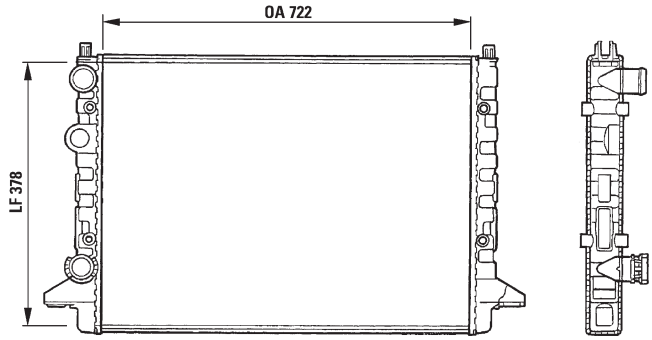


| | | |
|---|---|---|
| VOLKSWAGEN 3A0121253AB | 722x377,5x34 | 32mm L |
| | | 32mm L |

## 731009 RM1010 ALM

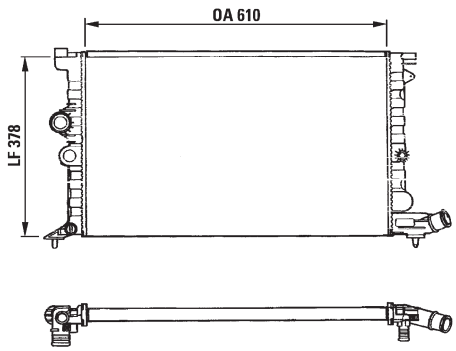


| | | |
|---|---|---|
| CITROEN 1301N9 | 610x377,5x23 | 32mm L |
| | | 32mm L |

## 731010 RM1011 ALM

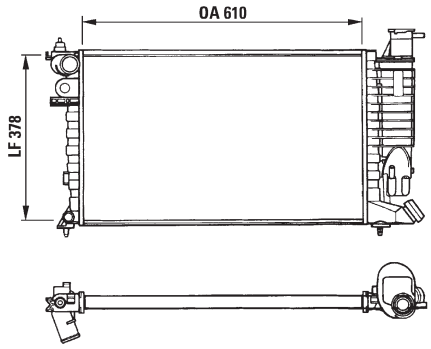


| | | |
|---|---|---|
| CITROEN 1331X2<br>PEUGEOT 1301JV | 610x377,5x23 | 40mm L |
| | | 40mm QC |

## 731011 ALB

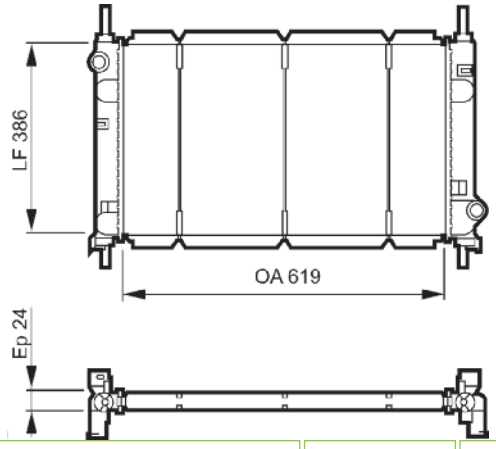


| | | |
|---|---|---|
| FORD 1029616 | 619x386x24 | 34mm L |
| | | 34mm L |

## 731012 RM1081 ALM

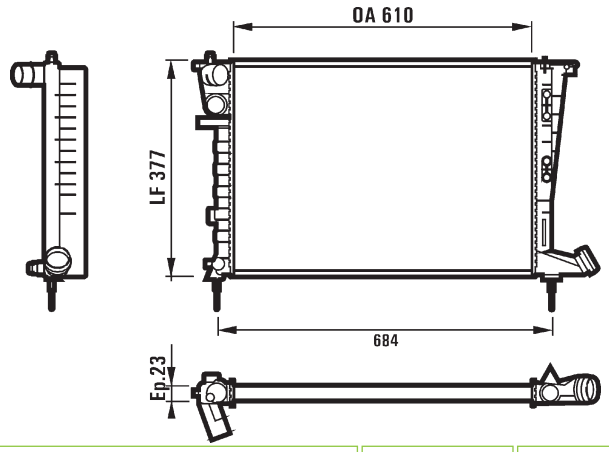


| | | |
|---|---|---|
| CITROEN 1301S0 | 610x377,5x23 | L |
| | - | OC |

## 731020 CBS

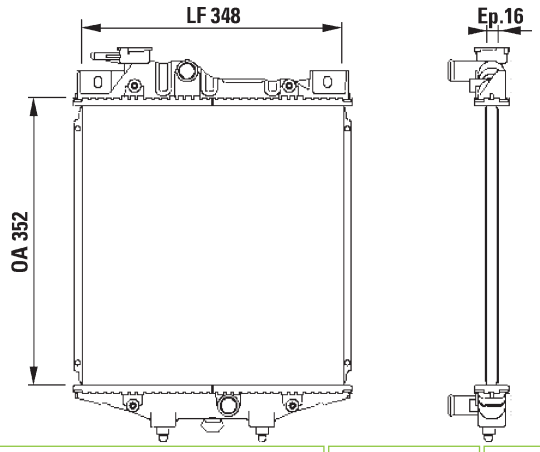


| | | |
|---|---|---|
| DAIHATSU 1640087768000 | 352x348x16 | 25mm L |
| | - | 25mm L |

## 731013 RM1082 ALM

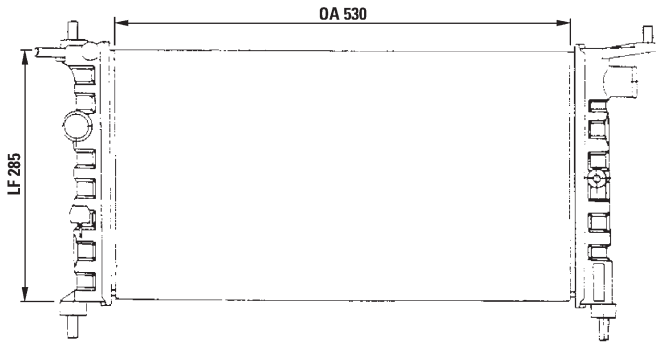


| | | |
|---|---|---|
| OPEL 1300149<br>VAUXHALL 90410047 | 530x285x28 | 34mm L |
| | - | 34mm L |

## 731022 RM1744 ALM

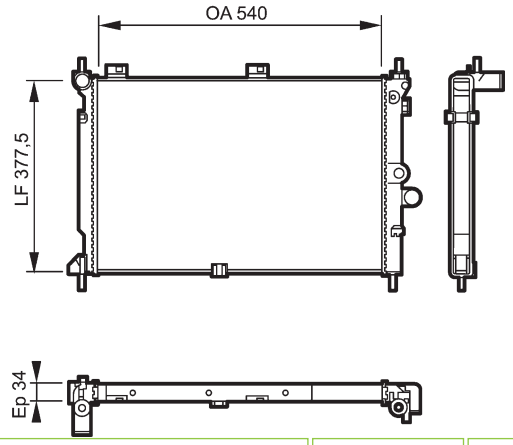


| | | |
|---|---|---|
| OPEL 1300103<br>VAUXHALL 90353025 | 540x377,5x34 | 34mm L |
| | - | 34mm L |

## 731019 CBS

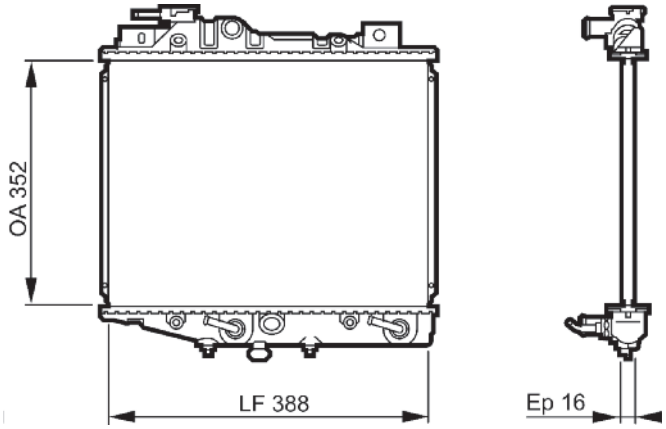


| | | |
|---|---|---|
| DAIHATSU 1640087F07000 | 352x388x16 | 25mm L |
| | + | 25mm L |

## 731025 RM1044 ALM

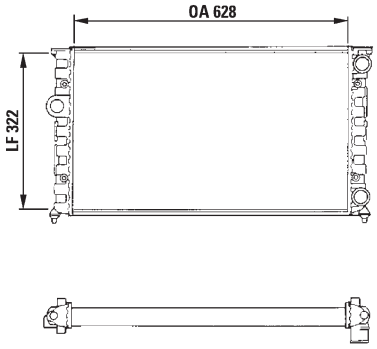


| | | |
|---|---|---|
| SEAT 1H0121253D<br>VOLKSWAGEN 1H0121253D | 628x322x34 | 32mm L |
| | - | 32mm L |

## 731032 RM1348 ALM

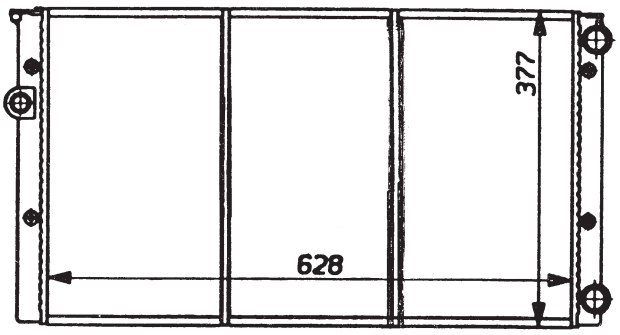


| | | | |
|---|---|---|---|
| VOLKSWAGEN | 1H0121253BA | 628x377.5x34 | 32mm L |
| | | - | 32mm L |

## 731054 CBS

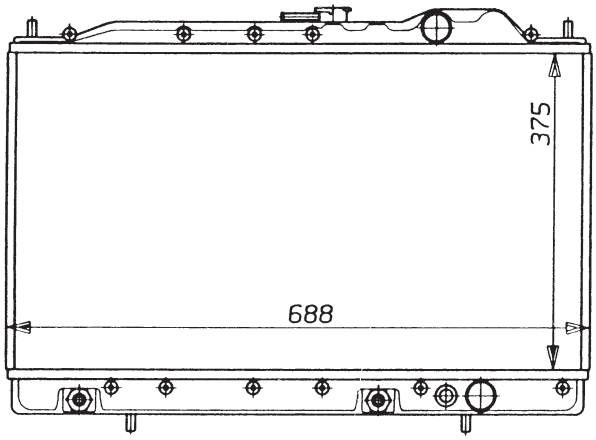


| | | | |
|---|---|---|---|
| MITSUBISHI | MB660472 | 377x688x32 | 35mm L |
| | | + | 35mm L |

## 731036 CBS

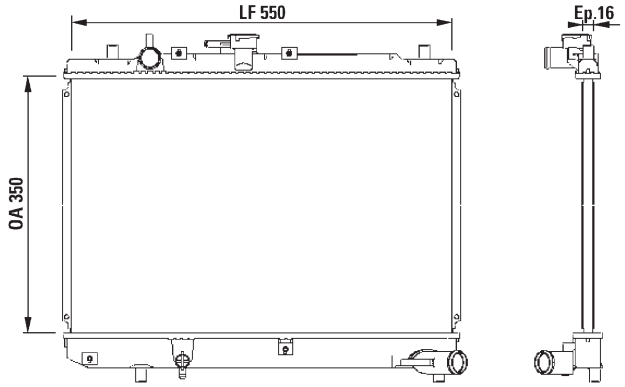


| | | | |
|---|---|---|---|
| MAZDA | B3C715200D | 350x550x16 | 28mm L |
| | | - | 31mm L |

## 731056 CBS

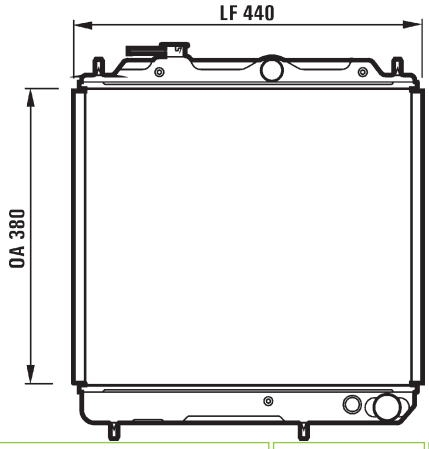


| | | | |
|---|---|---|---|
| MITSUBISHI | MB356521 | 380x440x17 | L |
| | | - | L |

## 731042 CBS

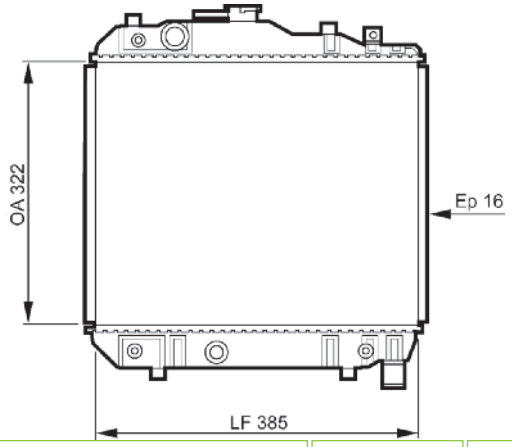


| | | | |
|---|---|---|---|
| MAZDA | B10215200 | 322x385x16 | 28mm L |
| | | - | 28mm L |

## 731072 CBS

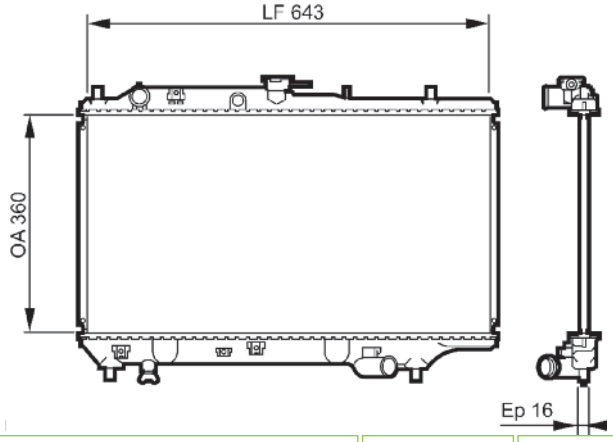


| | | | |
|---|---|---|---|
| MAZDA | B63F15200D | 360x643x25 | 31mm L |
| | | - | 31mm L |

## 731073 ALB

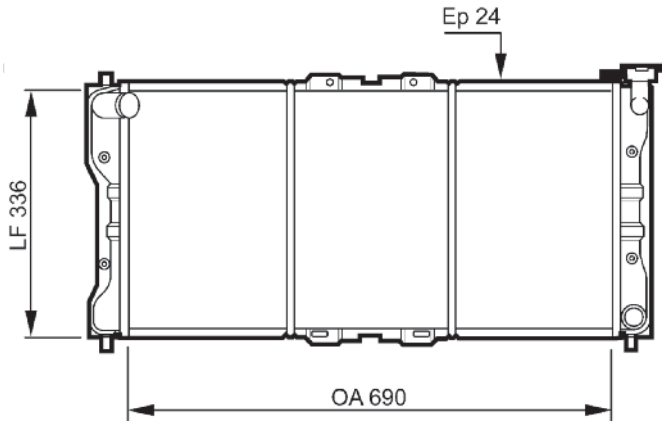


| | | |
|---|---|---|
| FORD USA 3396901<br>MAZDA FS1915200E | 690x336x24 | 35mm L |
| | - | 35mm L |

## 731083 CBS

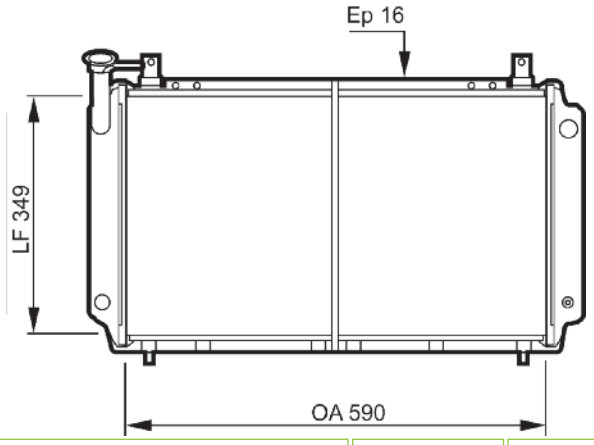


| | | |
|---|---|---|
| NISSAN 2146078A00 | 590x349x16 | 28mm L |
| | + | 28mm L |

## 731076 CBS

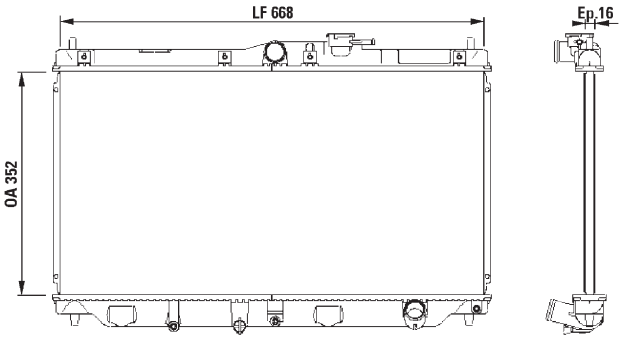


| | | |
|---|---|---|
| HONDA 19010PT0013<br>MG PCC113540<br>ROVER PCC113540 | 352x668x16 | 32mm L |
| | - | 32mm L |

## 731085 CBS

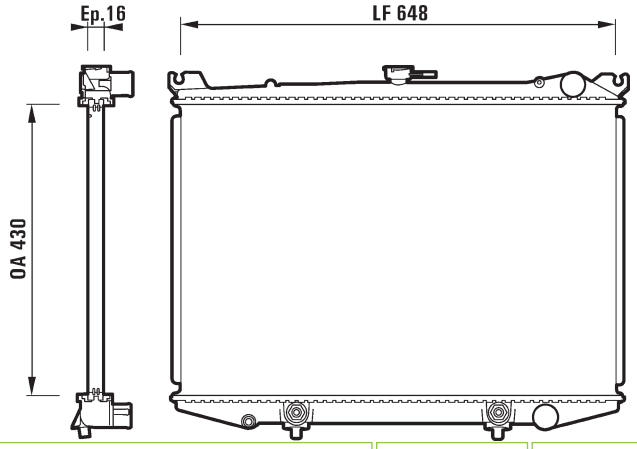


| | | |
|---|---|---|
| NISSAN 2140015G01 | 430x648x16 | 35mm L |
| | - | 35mm L |

## 731082 CBS

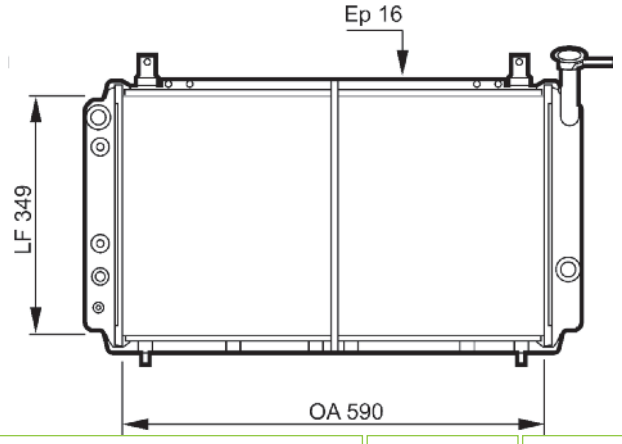


| | | |
|---|---|---|
| NISSAN 2146052A00 | 590x349x16 | 28mm L |
| | + | 28mm L |

## 731087 CBS

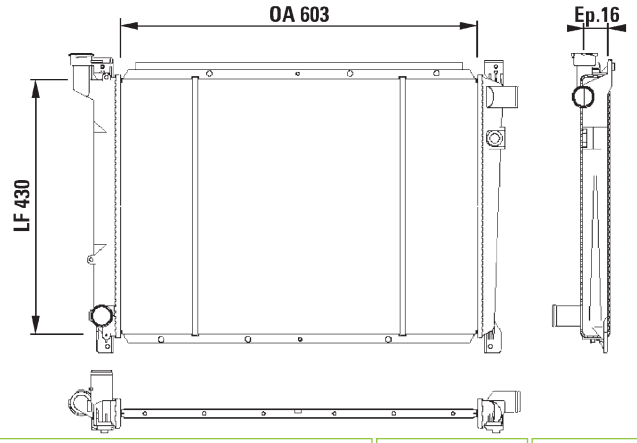


| | | |
|---|---|---|
| NISSAN 21410Q9001 | 603x430x16 | 35mm L |
| | - | 35mm L |

## 731090 ALB

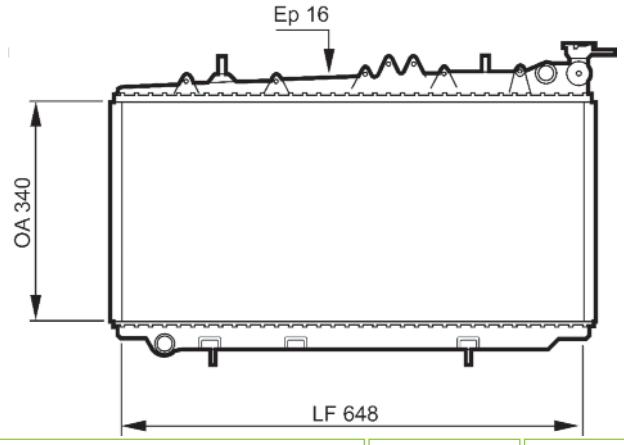


| | | |
|---|---|---|
| NISSAN 2141070J01 | 340x648x16 | 35mm L |
| | - | 35mm L |

## 731098 CBS

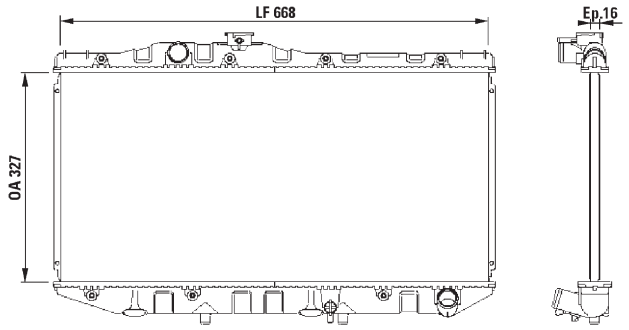


| | | |
|---|---|---|
| TOYOTA 1640074120 | 327x668x16 | 31mm L |
| | - | 31mm L |

## 731095 CBS

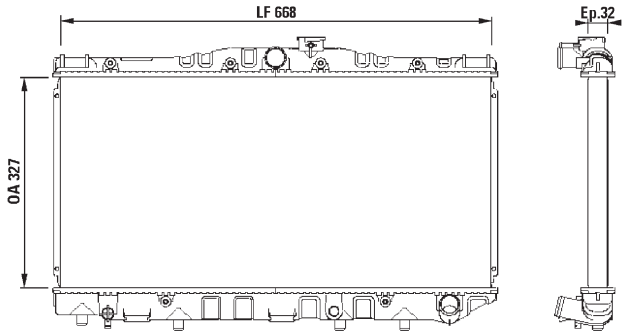


| | | |
|---|---|---|
| TOYOTA 1640064120 | 327x668x32 | 31mm L |
| | - | 31mm L |

## 731100 ALB

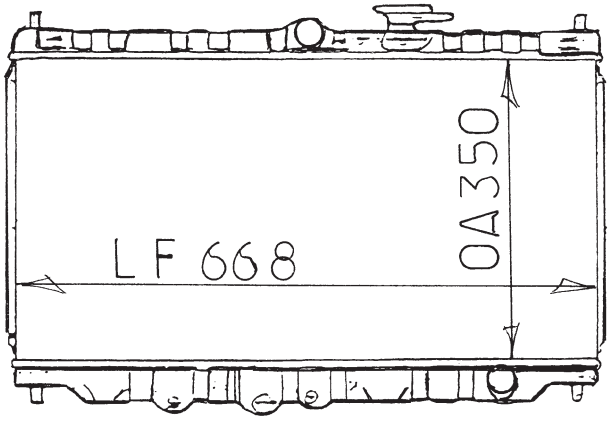


| | | |
|---|---|---|
| ROVER GRD169 | 350x668x24 | 34mm L |
| | + | 34mm L |

## 731097 CBS

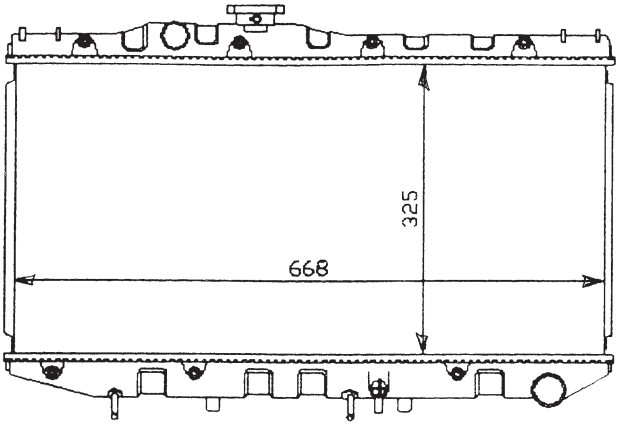


| | | |
|---|---|---|
| TOYOTA 1640074450 | 325x668x16 | 31mm L |
| | + | 31mm L |

## 731105 CBS

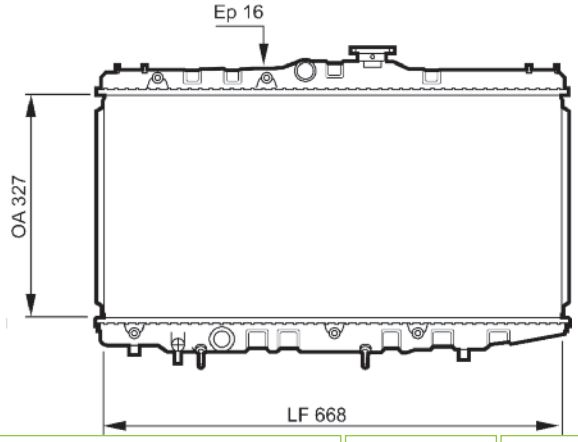


| | | |
|---|---|---|
| TOYOTA 1640016200 | 327x668x16 | 31mm L |
| | + | 31mm L |

## 731106 CBS

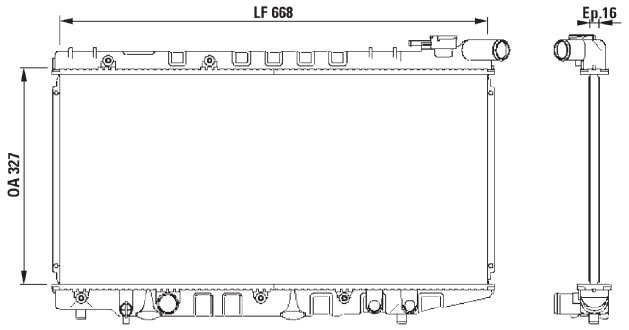


| | | |
|---|---|---|
| TOYOTA 1640016130 | 327x668x16 | 31mm L |
| | - | 31mm L |

## 731115 CBS

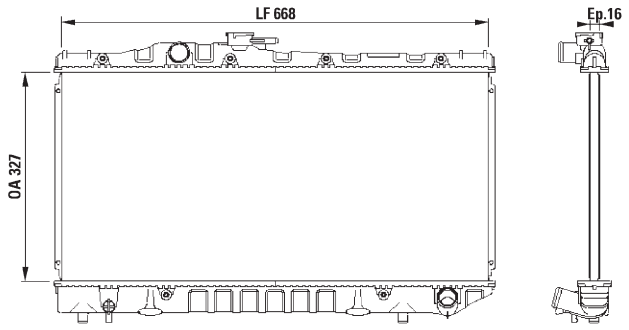


| | | |
|---|---|---|
| TOYOTA 1640074060 | 327x668x16 | 31mm L |
| | - | 31mm L |

## 731110 CBS

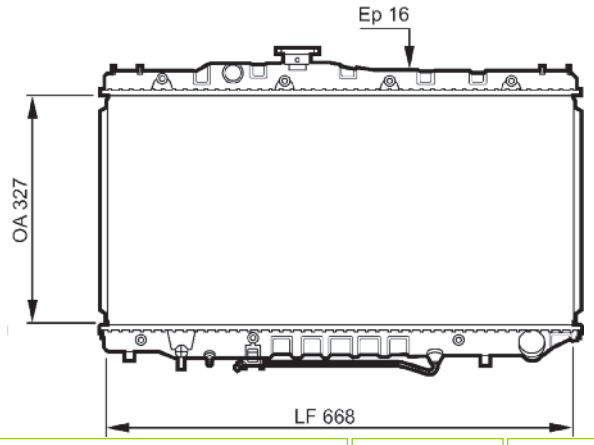


| | | |
|---|---|---|
| TOYOTA 1640074350 | 327x668x16 | 31mm L |
| | + | 31mm L |

## 731119 CBS

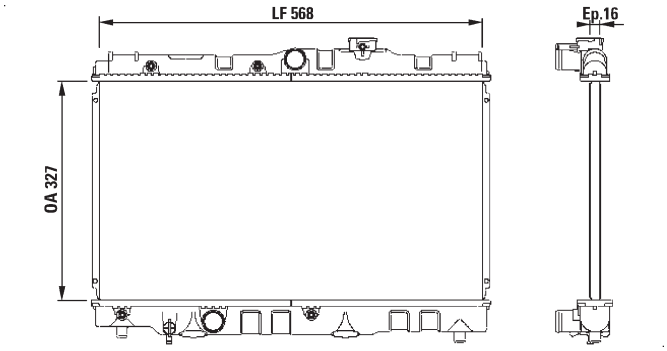


| | | |
|---|---|---|
| TOYOTA 1640011170 | 327x568x16 | 32mm L |
| | - | 32mm L |

## 731114 CBS

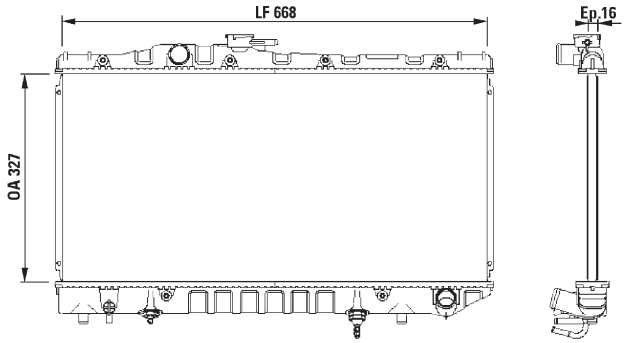


| | | |
|---|---|---|
| TOYOTA 1640074070 | 327x668x16 | 31mm L |
| | + | 31mm L |

## 731122 CBS

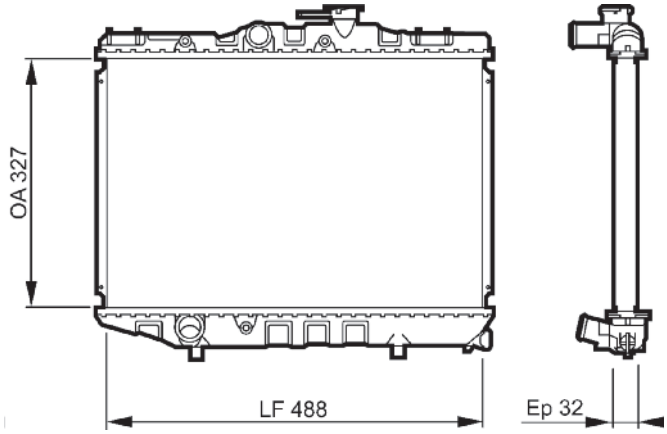


| | | |
|---|---|---|
| TOYOTA 1640055030 | 327x488x32 | 31mm L |
| | - | 31mm L |

## 731124 CBS

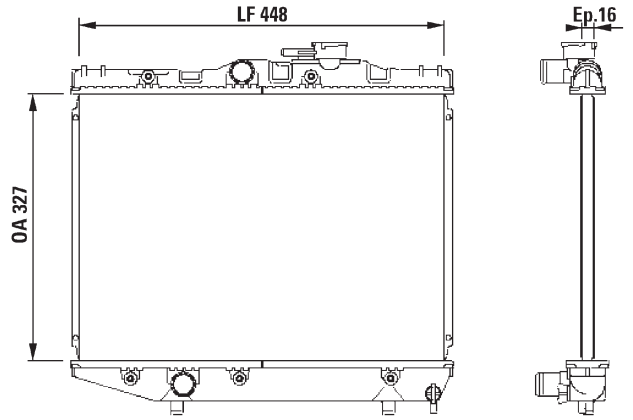


| | | | |
|---|---|---|---|
| TOYOTA | 1640010011 | 327x448x16 | 28mm L |
| | | - | 28mm L |

## 731129 RA1513 ALB

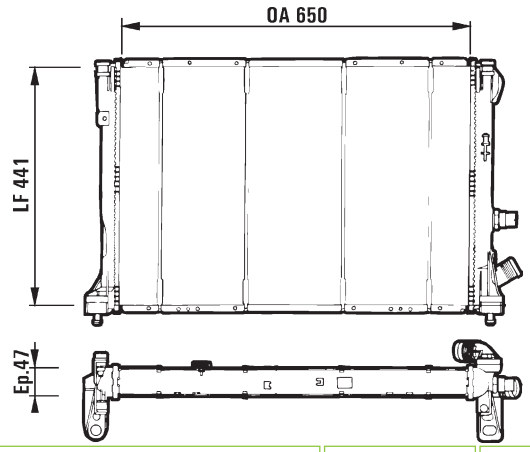


| | | | |
|---|---|---|---|
| RENAULT | 7701040662 | 650x442x34 | 32mm L |
| | | - | 32mm L |

## 731127 RM1043 ALM

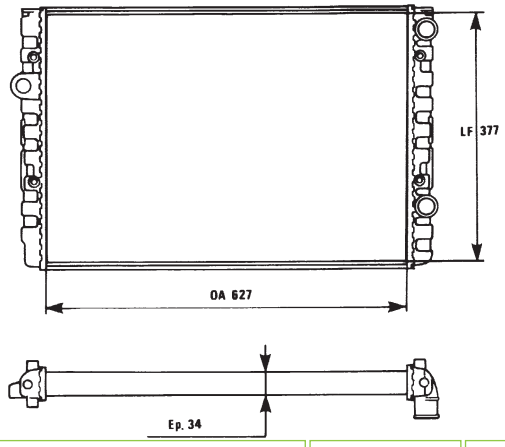


| | | | |
|---|---|---|---|
| VOLKSWAGEN | 1H0121253BC | 628x377,5x34 | 32mm L |
| | | - | 32mm L |

## 731134 ALB

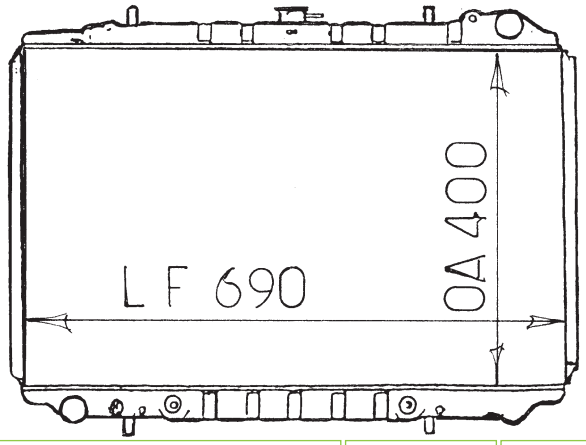


| | | | |
|---|---|---|---|
| NISSAN | 2146085E01 | 400x691x25 | 35mm L |
| | | + | 35mm L |

## 731128 TA668 ALM

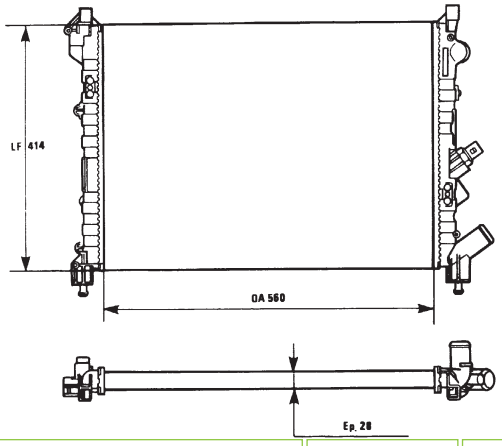


| | | | |
|---|---|---|---|
| RENAULT | 7701038237 | 560x414,5x28 | 32mm L |
| | | - | 32mm L |

## 731139 ALB

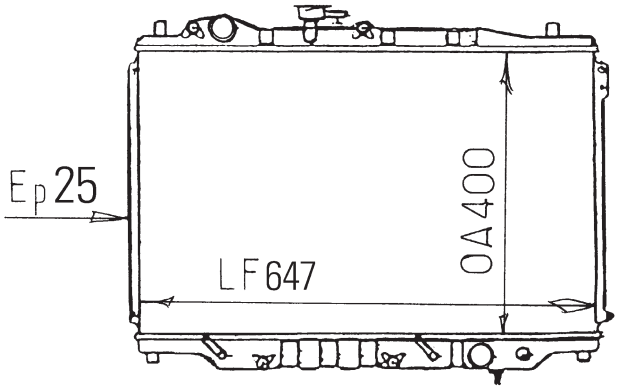


| | | | |
|---|---|---|---|
| MAZDA | FE4K15200A | 400x647x25 | 36mm L |
| | | + | 36mm L |

## 731142 CBS

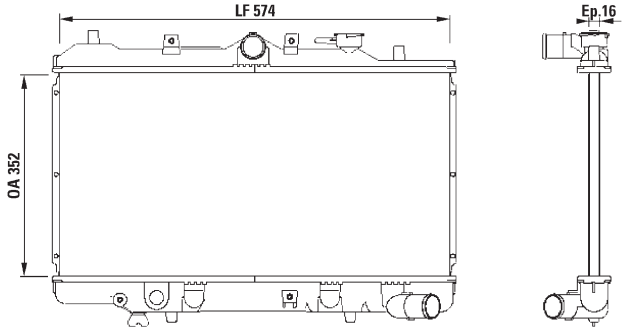


| | | |
|---|---|---|
| MAZDA B63115200A | 352x574x16 | 35mm L |
| | | 35mm L |

## 731161 RC1049 CBS

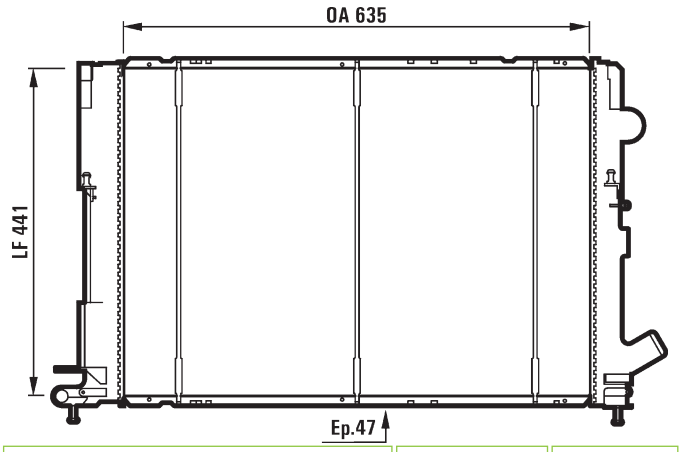


| | | |
|---|---|---|
| RENAULT 7700876214 | 635x441x47 | 32mm L |
| | | 32mm L |

## 731147 CBS

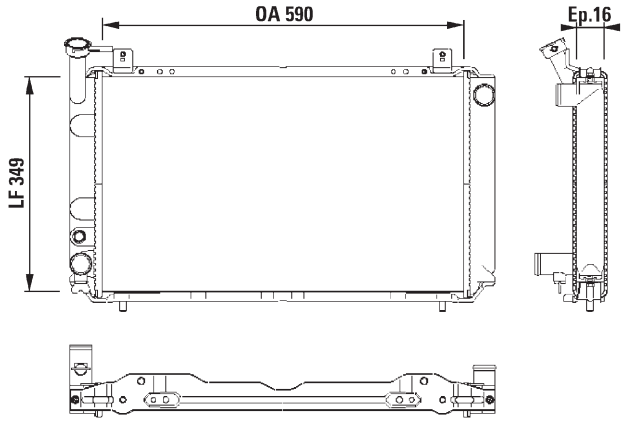


| | | |
|---|---|---|
| NISSAN 2141058A00 | 590x349x16 | 35mm L |
| | | 35mm L |

## 731162 ALB

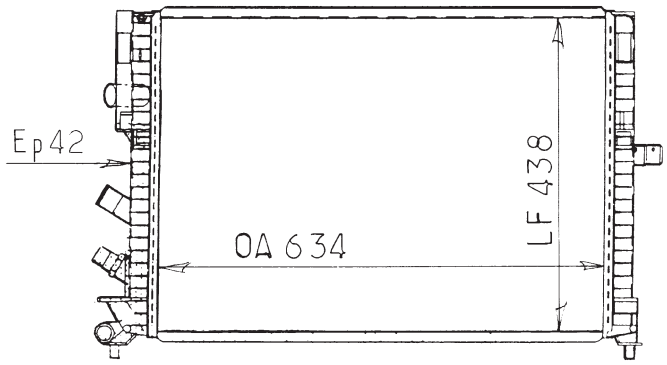


| | | |
|---|---|---|
| RENAULT 7701038220 | 634x438x42 | 32mm L |
| | | 32mm L |

## 731153 CBS

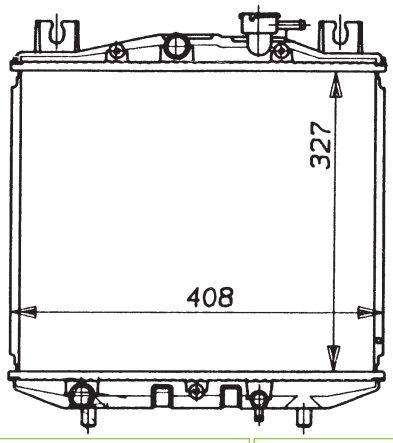


| | | |
|---|---|---|
| SUBARU 745111740 | 327x408x16 | 26mm L |
| | | 26mm L |

## 731165 RM1592 ALM

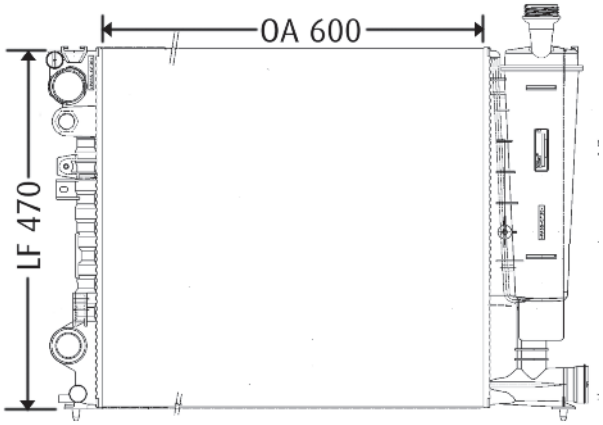


| | | |
|---|---|---|
| CITROEN 1301P1<br>FIAT 1485799080<br>LANCIA 1485799080<br>PEUGEOT 133073 | 600x470x23 | QC |
| | | QC |

## 731166 RM1591 ALM

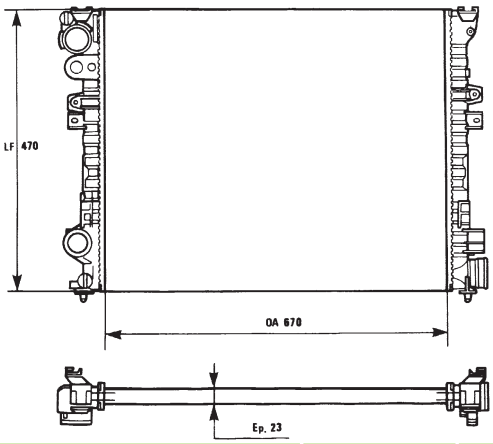


| | | | |
|---|---|---|---|
| CITROEN 1301P2<br>FIAT 1473910080<br>LANCIA 1475060080<br>PEUGEOT 1301P2 | 670x470x23 | QC | |
| | - | QC | |

## 731173 CBS

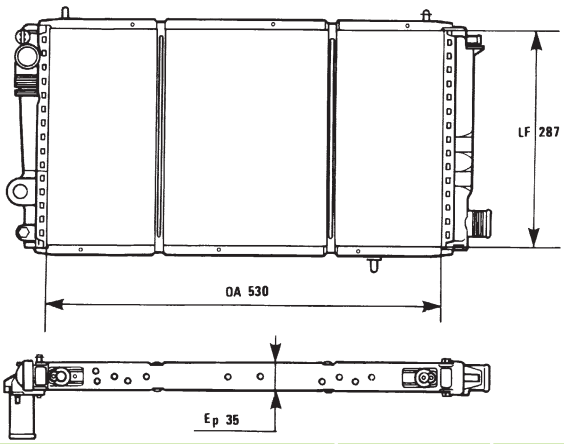


| | | | |
|---|---|---|---|
| CITROEN 1330K6 | 530x287x35 | 32mm L | |
| | - | 32mm L | |

## 731168 RM1746 ALM

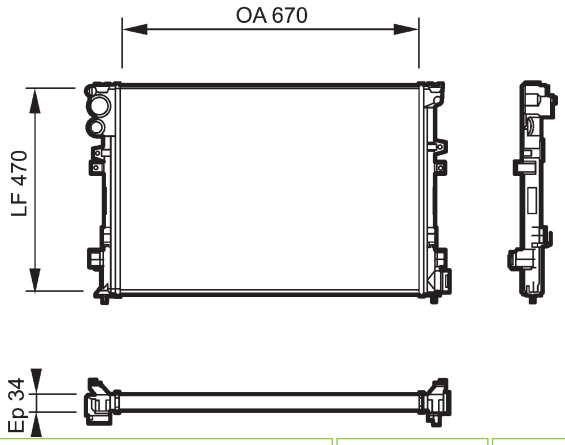


| | | | |
|---|---|---|---|
| CITROEN 1301Y7<br>FIAT 1475845080<br>LANCIA 1475845080<br>PEUGEOT 1301Y7 | 670x470x34 | 42mm QC | |
| | - | 42mm QC | |

## 731174 RM1490 ALM

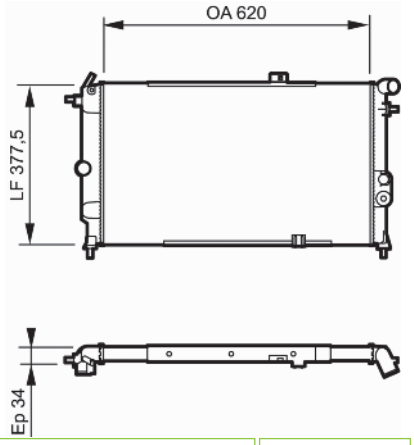


| | | | |
|---|---|---|---|
| OPEL 1300135<br>VAUXHALL 52455192 | 620x377,5x34 | 34mm L | |
| | - | 34mm L | |

## 731170 RM1745 ALM

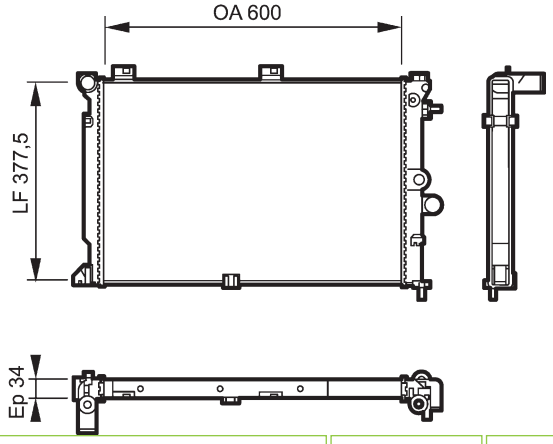


| | | | |
|---|---|---|---|
| OPEL 1300104<br>VAUXHALL 90353027 | 600x377,5x34 | 34mm L | |
| | - | 34mm L | |

## 731175 RM1491 ALM

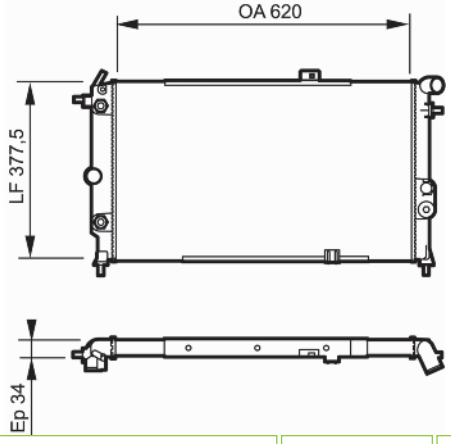


| | | | |
|---|---|---|---|
| OPEL 1300133<br>VAUXHALL 90443463 | 620x377,5x34 | 34mm L | |
| | + | 34mm L | |

## 731176 RM1513 ALM

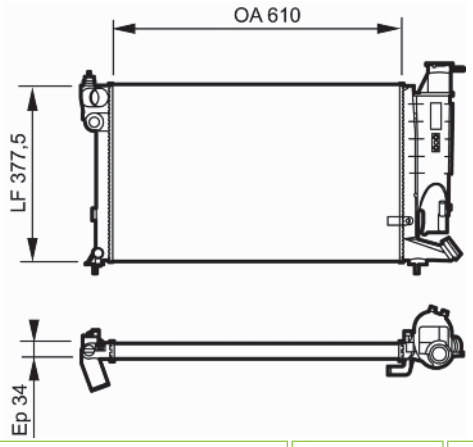


| | | |
|---|---|---|
| CITROEN 1301KG<br>PEUGEOT 1301L7 | 610x377,5x34 | 40mm L |
| | - | 40mm QC |

## 731179 RAB003 ALB

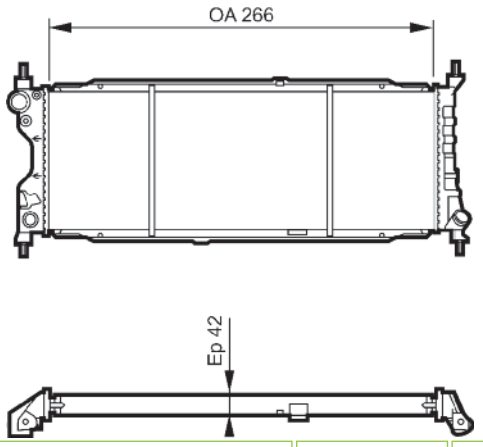


| | | |
|---|---|---|
| OPEL 1300151<br>VAUXHALL 90410049 | 650x266x42 | 35mm L |
| | - | 35mm L |

## 731177 RM1726 ALM

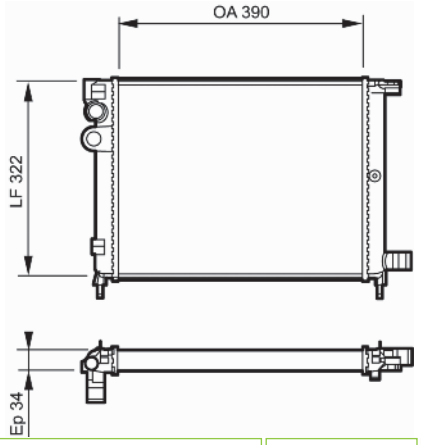


| | | |
|---|---|---|
| CITROEN 1301V4 | 390x322x34 | 28mm L |
| | - | 28mm L |

## 731180 RM1520 ALM

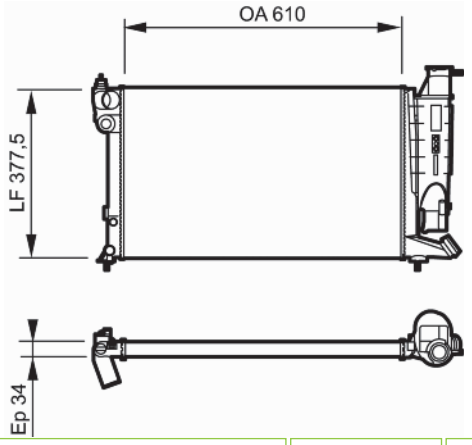


| | | |
|---|---|---|
| CITROEN 1301X0 | 610x377,5x34 | 40mm L |
| | - | 40mm QC |

## 731178 ALM

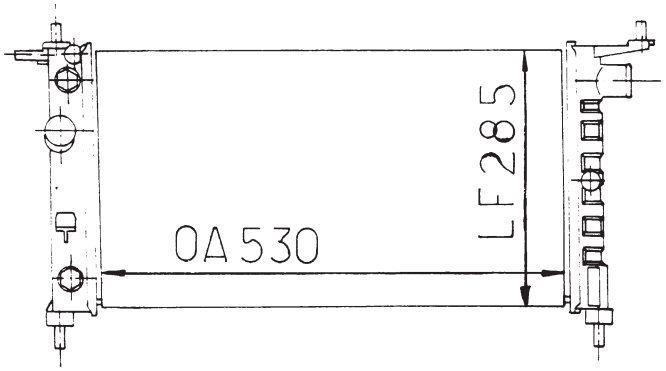


| | | |
|---|---|---|
| OPEL 1300150<br>VAUXHALL 90410048 | 530x285x26 | 34mm L |
| | + | 34mm L |

## 731181 RM1517 ALM

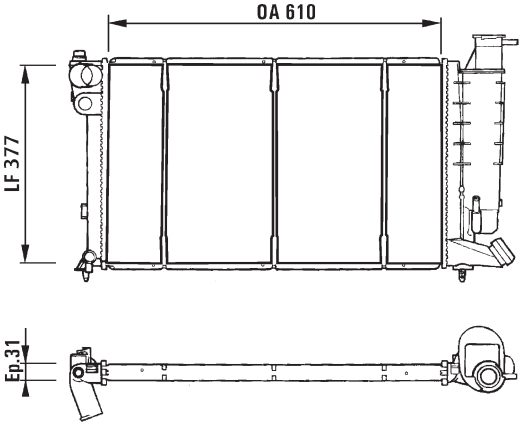


| | | |
|---|---|---|
| CITROEN 1301JY<br>PEUGEOT 1301JY | 610x377,5x34 | 40mm L |
| | - | 40mm QC |

## 731185 CBS

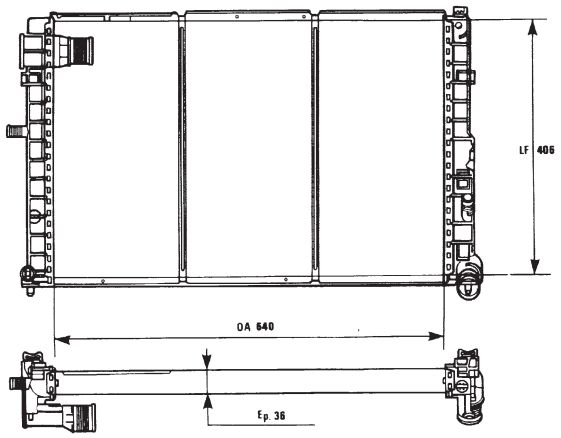


| | | |
|---|---|---|
| CITROEN 1301TF<br>PEUGEOT 1301TF | 640x406x36 | 40mm L |
| | | 40mm L |

## 731196 CBS

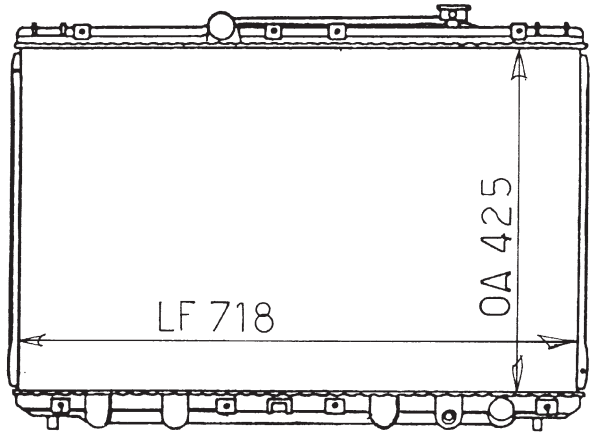


| | | |
|---|---|---|
| TOYOTA 1640074750 | 425x718x16 | 31mm L |
| | | 31mm L |

## 731186 RM1518 ALM

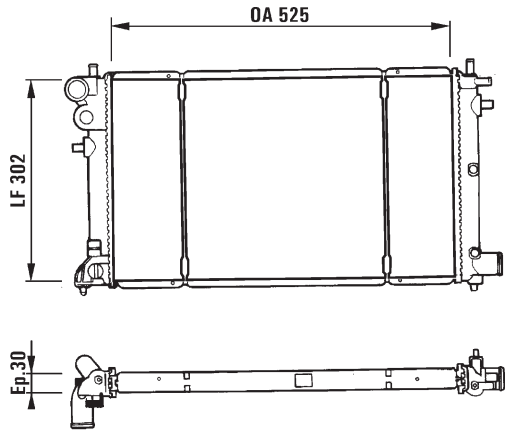


| | | |
|---|---|---|
| PEUGEOT 133005 | 525x322x34 | 32mm L |
| | | 32mm L |

## 731199 CBS

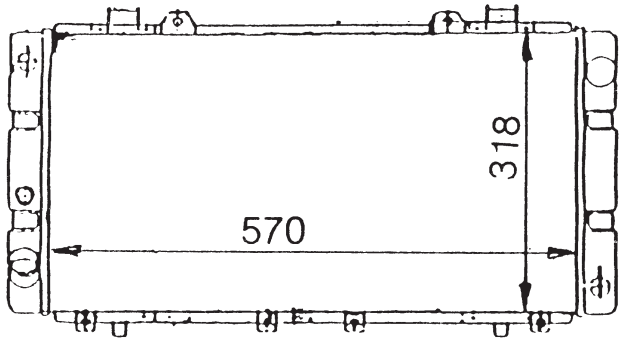


| | | |
|---|---|---|
| TOYOTA 1640016120 | 570x318x33 | 32mm L |
| | | 32mm L |

## 731193 CBS

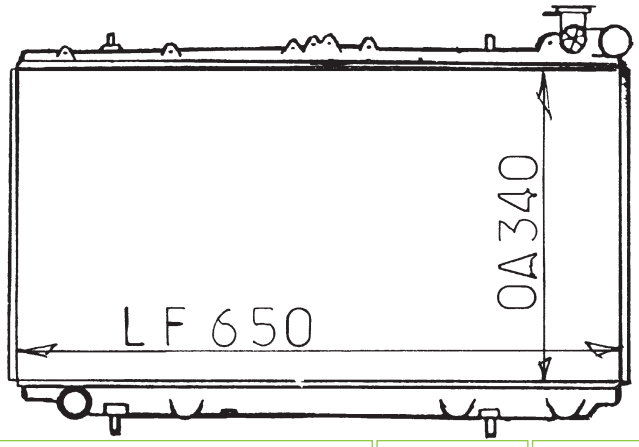


| | | |
|---|---|---|
| NISSAN 2141072J20 | 340x650x21 | 35mm L |
| | | 35mm L |

## 731202 CBS

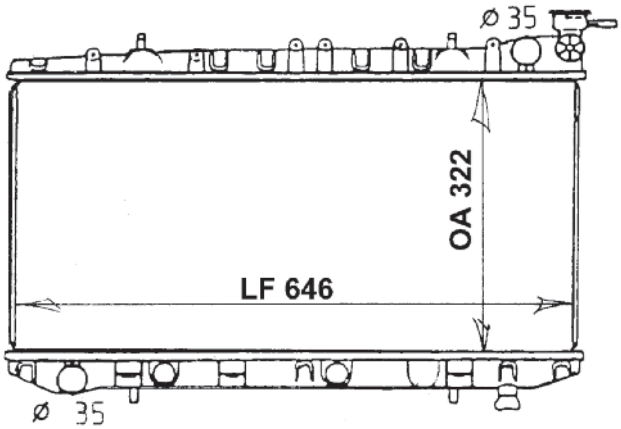


| | | |
|---|---|---|
| NISSAN 2141059Y01 | 322x646x25 | 35mm L |
| | | 35mm L |

## 731210 CBS

Picture not available
Image non disponible
Imagen no disponible
Immagine non disponibile
Nicht verfügbares Bild
Brak zdjęcia
Картина недоступна

| | | | |
|---|---|---|---|
| ROVER | PCC10040 | 521x380x22 | 28mm L |
| | | | 28mm L |

## 731217 CBS

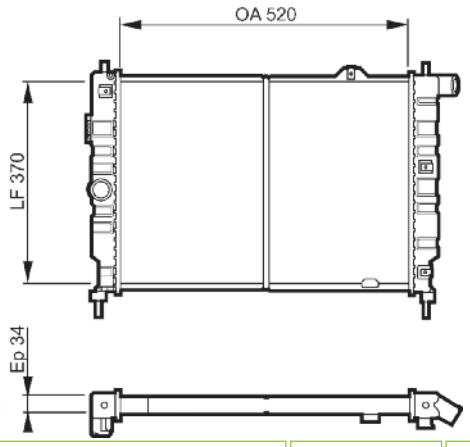


| | | | |
|---|---|---|---|
| OPEL<br>VAUXHALL | 1300050<br>90442621 | 520x370x34 | 34mm L |
| | | | 34mm L |

## 731211 CBS

Picture not available
Image non disponible
Imagen no disponible
Immagine non disponibile
Nicht verfügbares Bild
Brak zdjęcia
Картина недоступна

| | | | |
|---|---|---|---|
| ROVER | GRD143 | 400x380x28 | |
| | | | |

## 731235 CBS

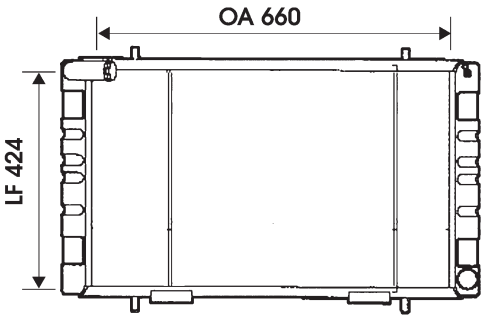


| | | | |
|---|---|---|---|
| LAND ROVER | NRC6889 | 660x424x50 | 35mm L |
| | | | 35mm L |

## 731215 CBS

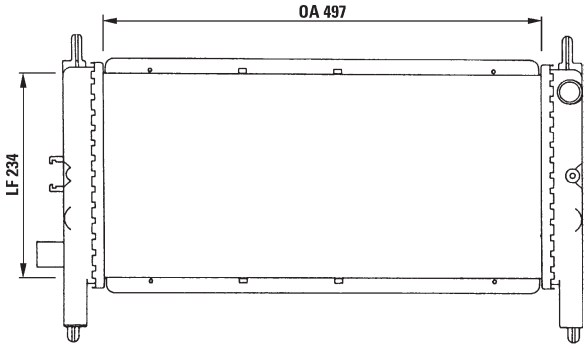


| | | | |
|---|---|---|---|
| ROVER | GRD979 | 497x234x16 | 28mm L |
| | | | 28mm L |

## 731236 CBS

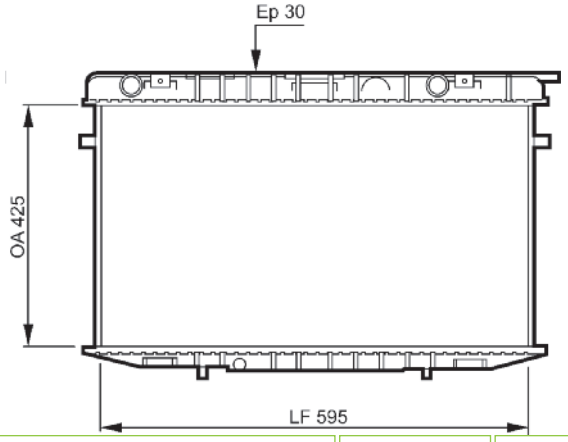


| | | | |
|---|---|---|---|
| OPEL<br>VAUXHALL | 1302058<br>91147724 | 425x595x30 | 34mm L |
| | | | 34mm L |

## 731237 RAB026 ALB

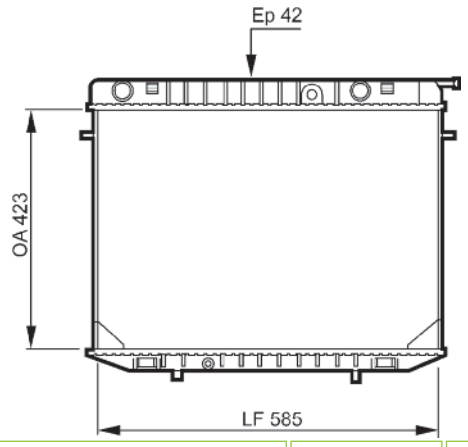


| | | |
|---|---|---|
| OPEL 6302003<br>VAUXHALL 91146914 | 423x585x42 | 34mm L |
| – | | 34mm L |

## 731251 RM2029 ALM

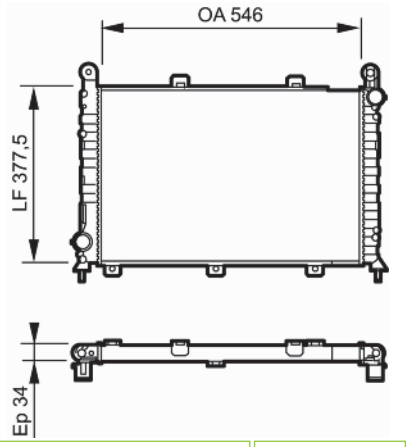


| | | |
|---|---|---|
| ALFA ROMEO 71735411 | 546x377,5x34 | 32mm L |
| – | | 32mm L |

## 731243 CBS

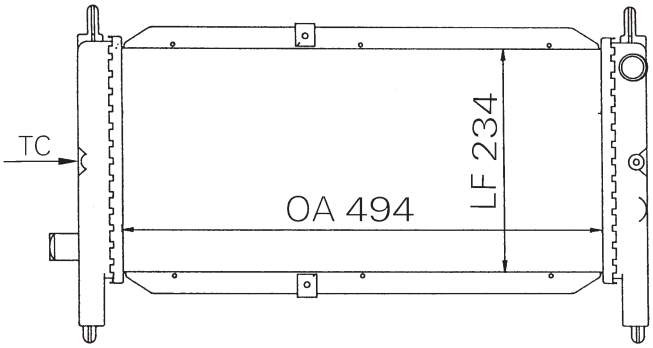


| | | |
|---|---|---|
| ROVER GRD166 | 494x234x19 | 28mm L |
| – | | 28mm L |

## 731257 RAB028 CBS

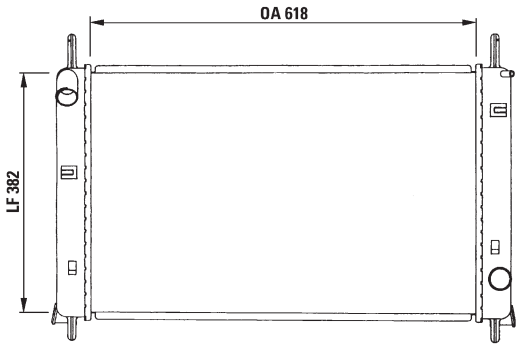


| | | |
|---|---|---|
| FORD 1024051 | 618x382x39 | 34mm L |
| – | | 34mm L |

## 731248 CBS

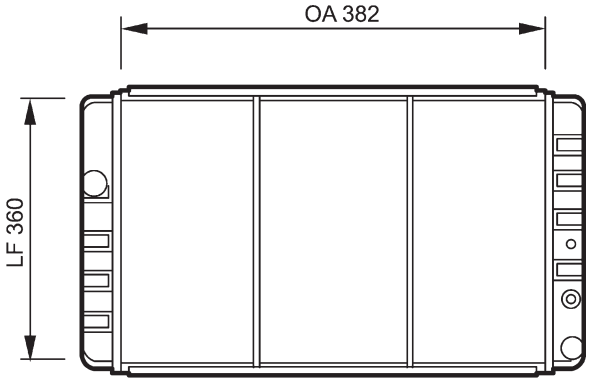


Ep 34

| | | |
|---|---|---|
| VOLVO 32119828 | 382x360x34 | 32mm L |
| – | | 32mm L |

## 731264 RM1131 ALM

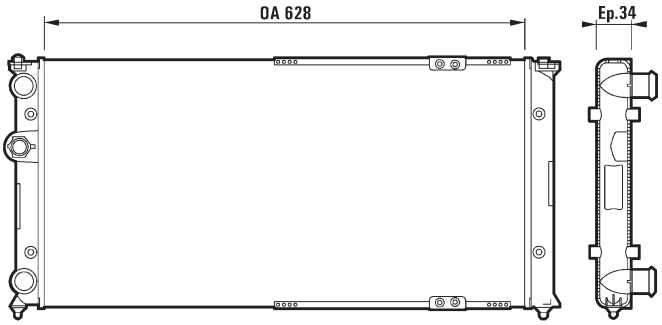


| | | |
|---|---|---|
| SEAT 6K0121253T | 628x322x34 | L |
| – | | L |

## 731265 RM1086 ALM

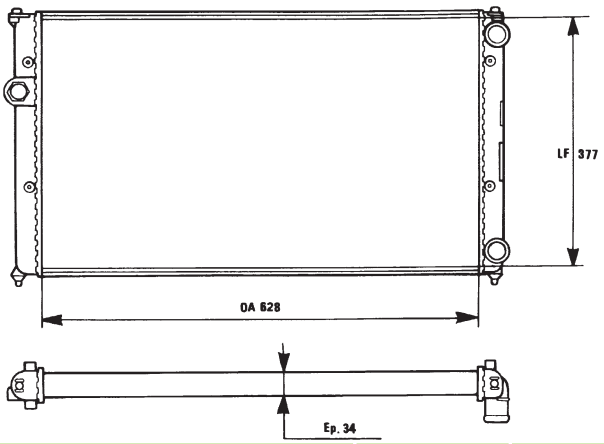


| | | | |
|---|---|---|---|
| SEAT 1H0121253P<br>VOLKSWAGEN 1H0121253P | 628x377,5x34 | 32mm L | |
| | - | 32mm L | |

## 731268 RM1084 ALM

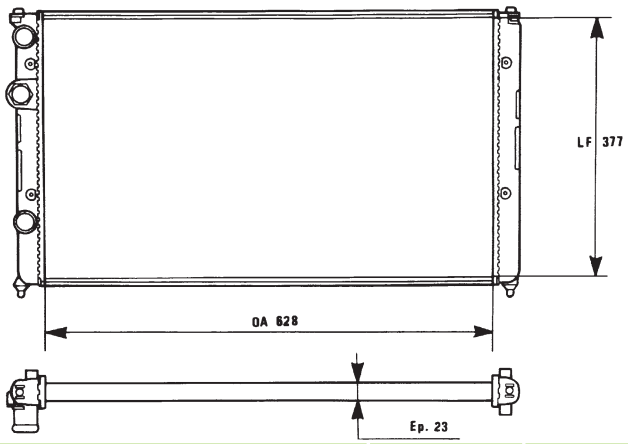


| | | | |
|---|---|---|---|
| SEAT 1HM121253D<br>VOLKSWAGEN 1HM121253D | 628x377,5x23 | 32mm L | |
| | - | 32mm L | |

## 731266 RM1085 ALM

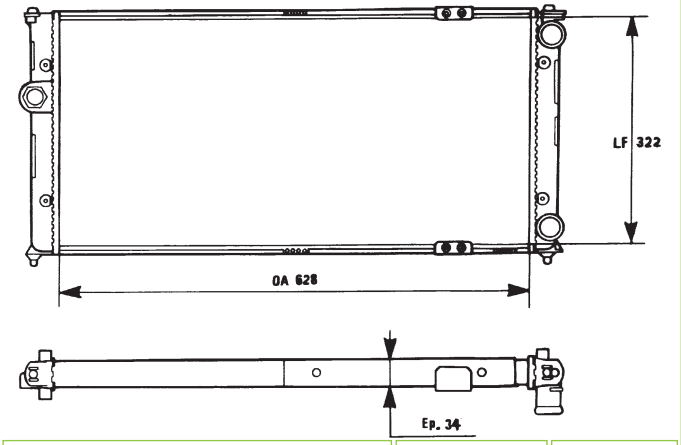


| | | | |
|---|---|---|---|
| SEAT 6K0121253G<br>VOLKSWAGEN 6K0121253G | 628x322x34 | 32mm L | |
| | - | 32mm L | |

## 731269 RM1088 ALM

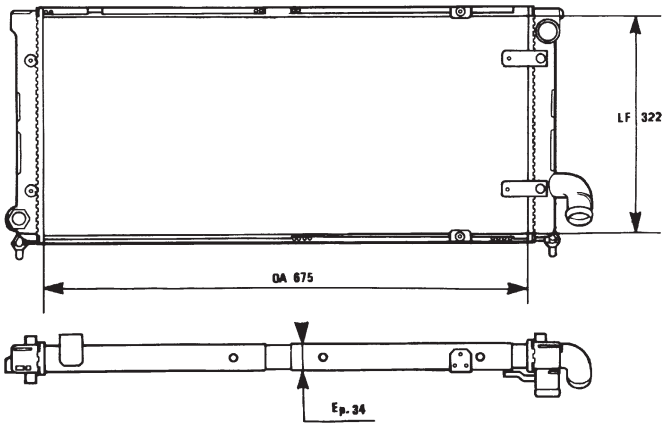


| | | | |
|---|---|---|---|
| SEAT 1L0121253F | 675x322x34 | 32mm L | |
| | - | 32mm L | |

## 731267 RM1132 ALM

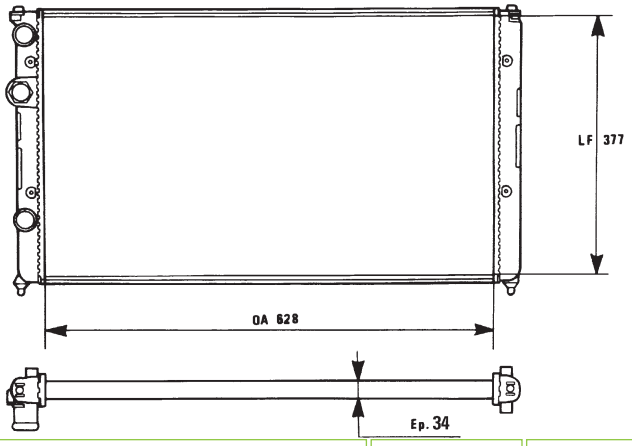


| | | | |
|---|---|---|---|
| SEAT 1H0121253L<br>VOLKSWAGEN 1H0121253CB | 628x377,5x34 | 32mm L | |
| | - | 32mm L | |

## 731270 RM1089 ALM

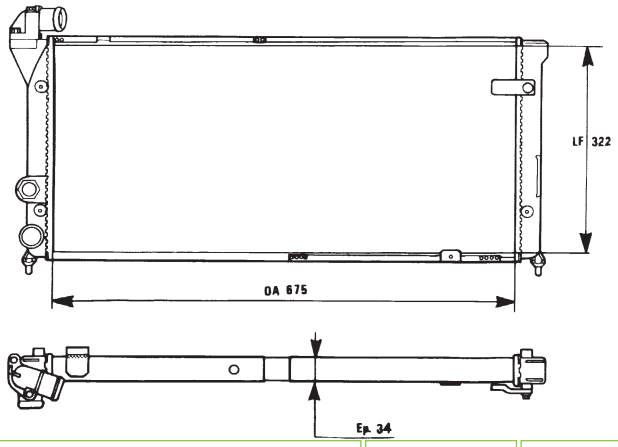


| | | | |
|---|---|---|---|
| SEAT 1L0121251E | 675x322x34 | 32mm L | |
| | - | 32mm L | |

## 731271 RM1087 ALM

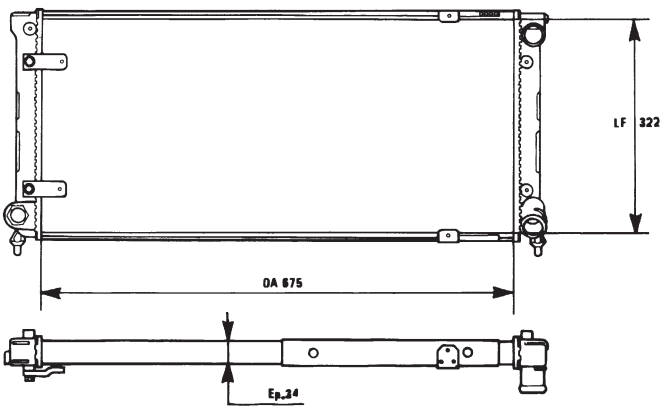


| | | |
|---|---|---|
| SEAT 1L0121253E | 675x322x34 | 32mm L |
| | | 32mm L |

## 731281 TA817 ALB

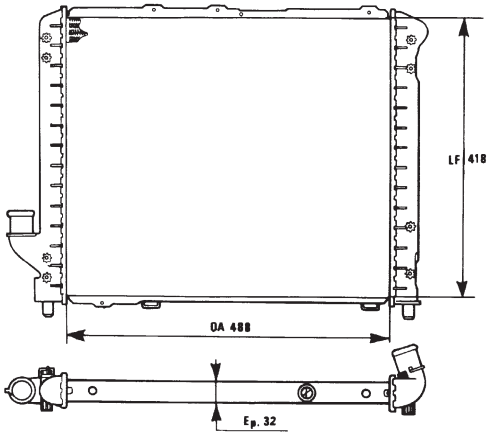


| | | |
|---|---|---|
| LANCIA 7799061 | 488x418x32 | 35mm L |
| | | 35mm L |

## 731276 TA812 ALB

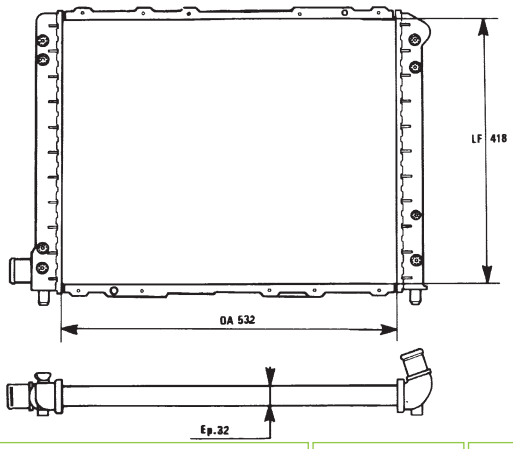


| | | |
|---|---|---|
| LANCIA 82458169 | 532x418x32 | 35mm L |
| | | 35mm L |

## 731282 RM106 ALM

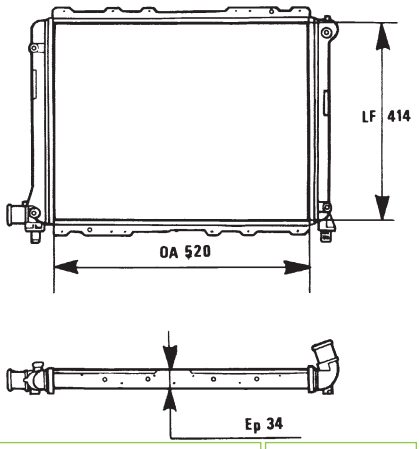


| | | |
|---|---|---|
| LANCIA 7785927 | 520x414x34 | 35mm L |
| | | 35mm L |

## 731278 TA814 ALB

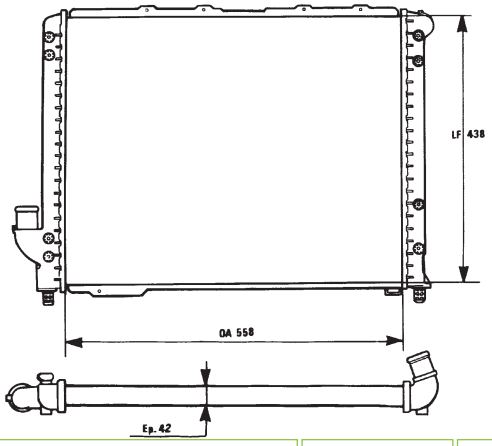


| | | |
|---|---|---|
| ALFA ROMEO 82489087<br>LANCIA 82489087 | 558x438x42 | L |
| | | L |

## 731283 RM1766 ALM

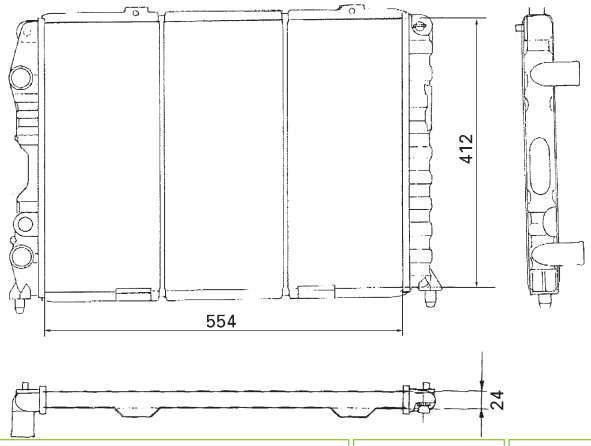


| | | |
|---|---|---|
| ALFA ROMEO 60690407 | 554x414,5x34 | 35mm L |
| | | 35mm L |

## 731287 ALB

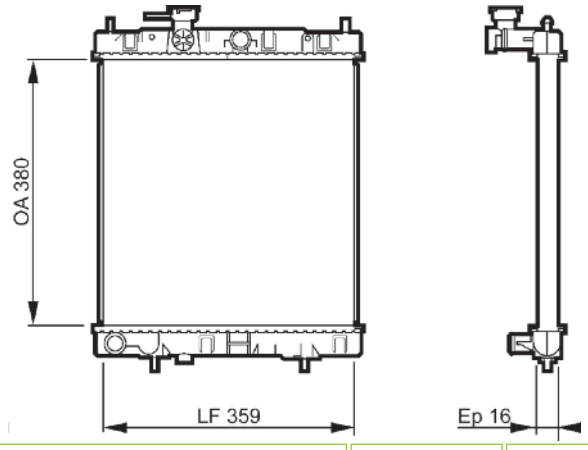


| | | |
|---|---|---|
| NISSAN 2146097B00 | 380x359x16 | 35mm L |
| | - | 35mm L |

## 731293 RM1369 ALM

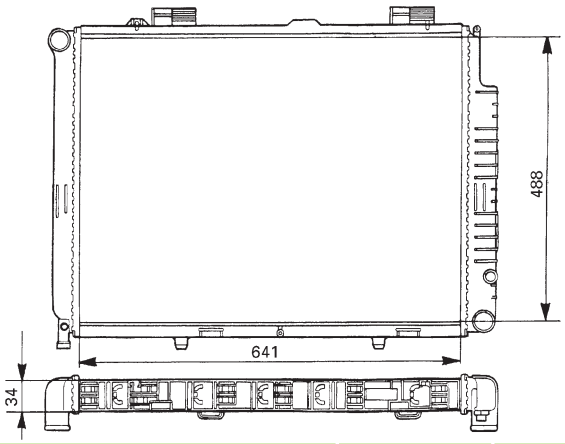


| | | |
|---|---|---|
| MERCEDES 2105000803 | 641x488,5x34 | 38mm L |
| | - | 38mm L |

## 731289 RM1750 ALM

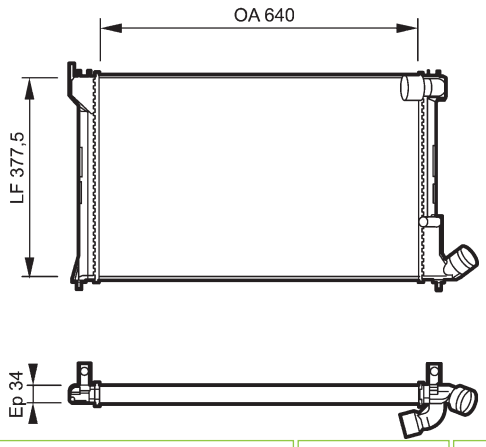


| | | |
|---|---|---|
| CITROEN 1301Z8<br>PEUGEOT 1301Z8 | 640x414,5x34 | QC |
| | - | QC |

## 731294 RM1370 ALM

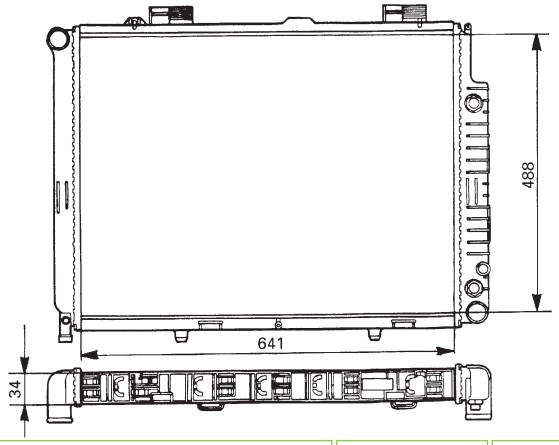


| | | |
|---|---|---|
| MERCEDES 2105002803 | 641x488,5x34 | 38mm L |
| | + | 38mm L |

## 731292 RM1368 ALM

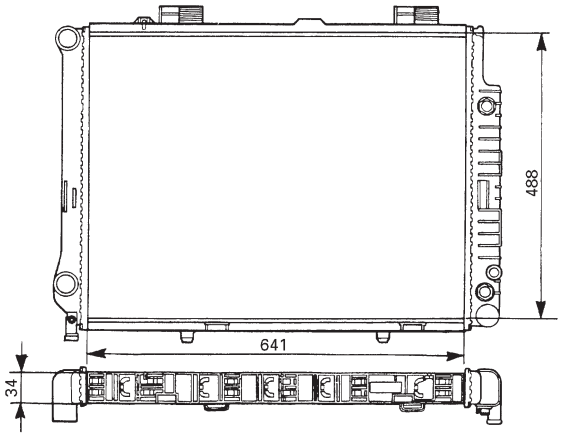


| | | |
|---|---|---|
| MERCEDES 2105000903 | 641x488,5x34 | 38mm L |
| | + | 38mm L |

## 731295 RM1098 ALM

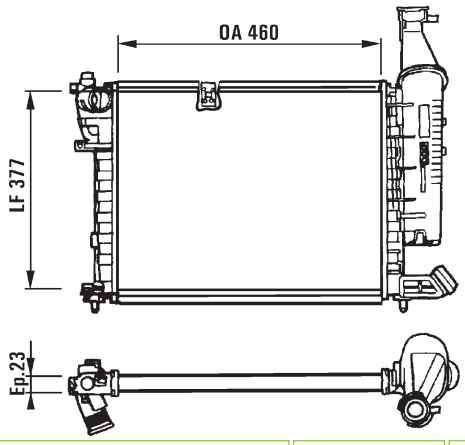


| | | |
|---|---|---|
| PEUGEOT 133007 | 460x377,5x23 | 40mm L |
| | - | 40mm QC |

## 731296 RM1097 ALM

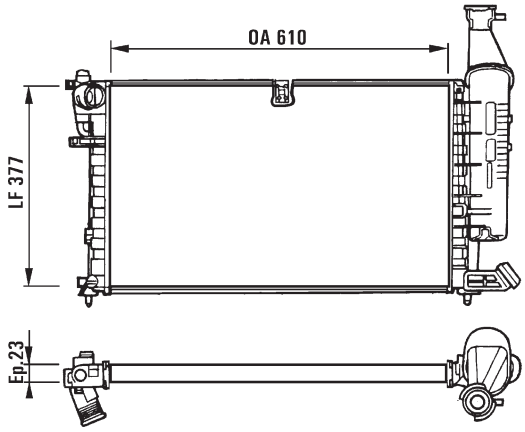


| | | |
|---|---|---|
| PEUGEOT 133008 | 610x377,5x23 | 40mm L |
| | | 40mm QC |

## 731299 CBS

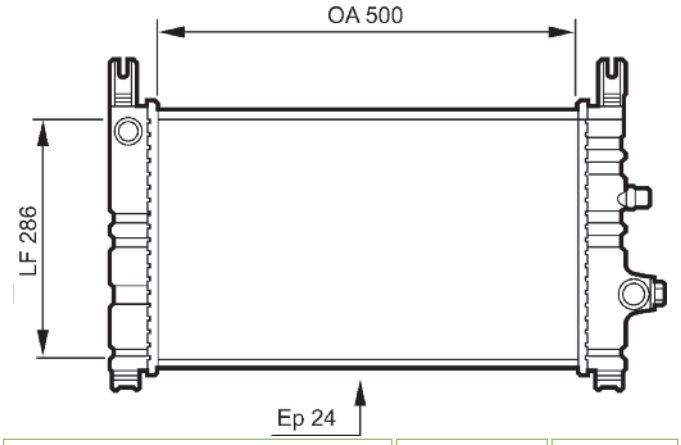


| | | |
|---|---|---|
| FORD 7138825 | 500x286x24 | |
| | | |

## 731297 RM1751 ALM

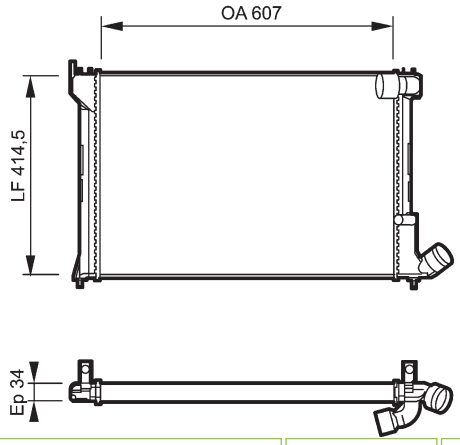


| | | |
|---|---|---|
| CITROEN 1301GL | 607x414,5x34 | 42mm QC |
| | | 42mm QC |

## 731300 CBS

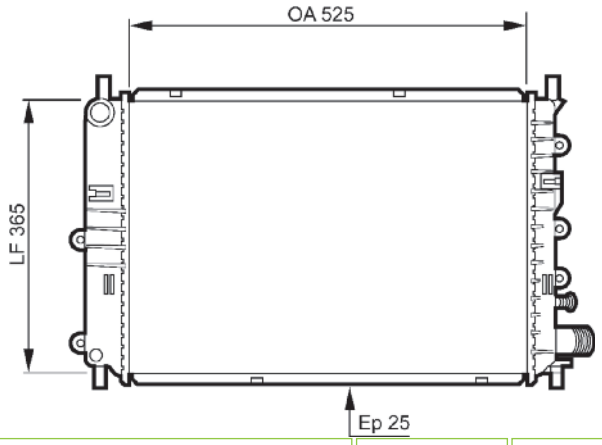


| | | |
|---|---|---|
| FORD 6792788 | 525x365x25 | 35mm L |
| | | 35mm L |

## 731298 RM1102 ALM

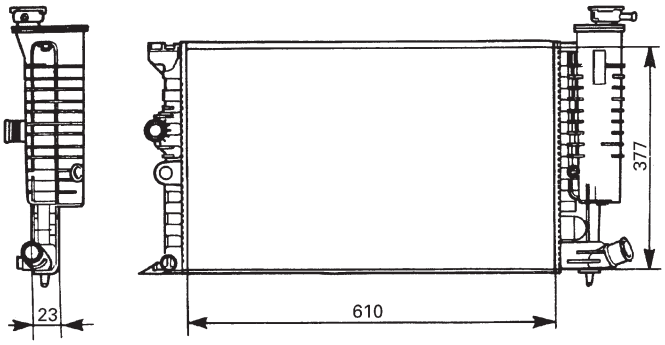


| | | |
|---|---|---|
| CITROEN 1301GG<br>PEUGEOT 1301GG | 610x377,5x23 | 32mm L |
| | | 32mm L |

## 731302 RM167 ALM

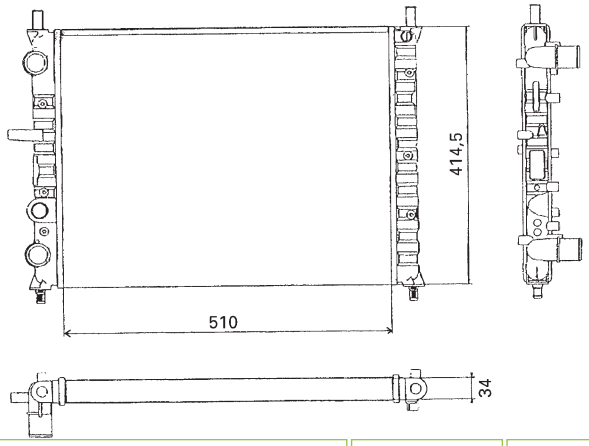


| | | |
|---|---|---|
| FIAT 7767440 | 510x414,5x34 | 35mm L |
| | | 35mm L |

## 731303 RM168 ALM

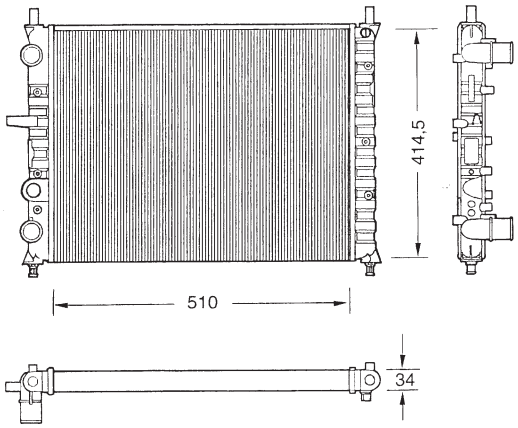


| | | |
|---|---|---|
| FIAT 46736953 | 510x414,5x34 | 35mm L |
| | - | 35mm L |

## 731372 ALB

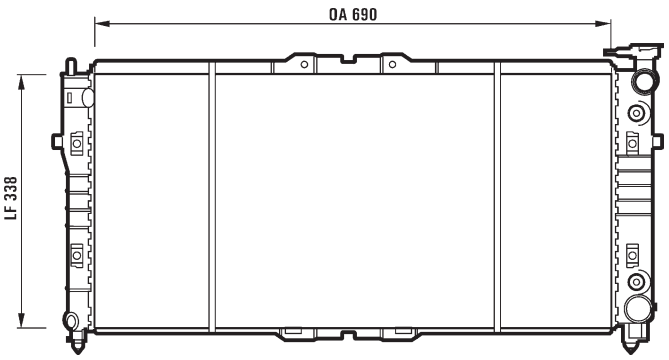


| | | |
|---|---|---|
| MAZDA FS2015200F | 690x385x16 | 35mm L |
| | + | 35mm L |

## 731304 RM116 ALM

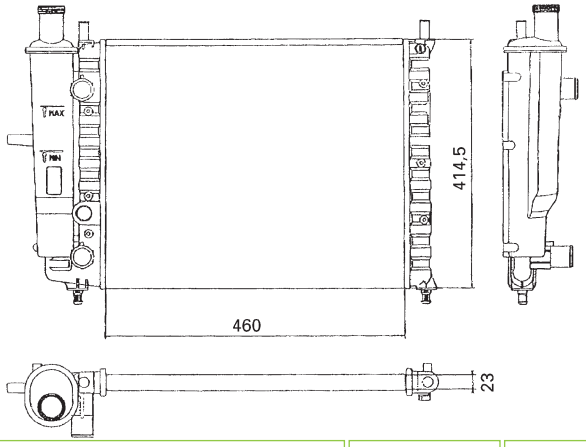


| | | |
|---|---|---|
| FIAT 46736955 | 460x414x23 | L |
| | - | L |

## 731374 RM127 ALM

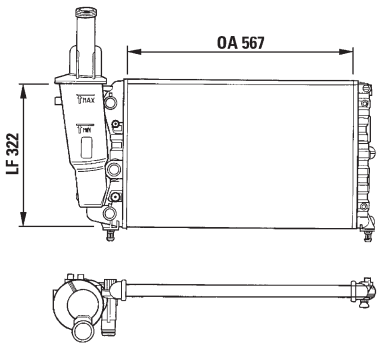


| | | |
|---|---|---|
| FIAT 46430837<br>LANCIA 46430837 | 322x567x23 | 32mm L |
| | - | 32mm L |

## 731306 RM2005 ALM

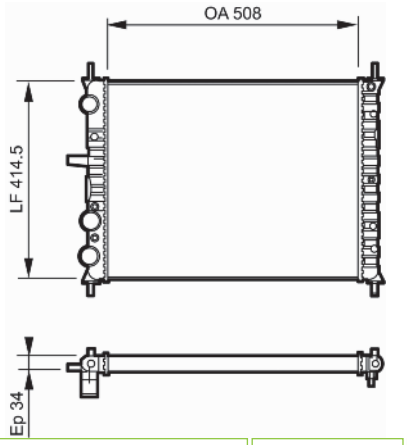


| | | |
|---|---|---|
| FIAT 7767815 | 508x414,5x34 | 35mm L |
| | - | 35mm L |

## 731375 RM134 ALM

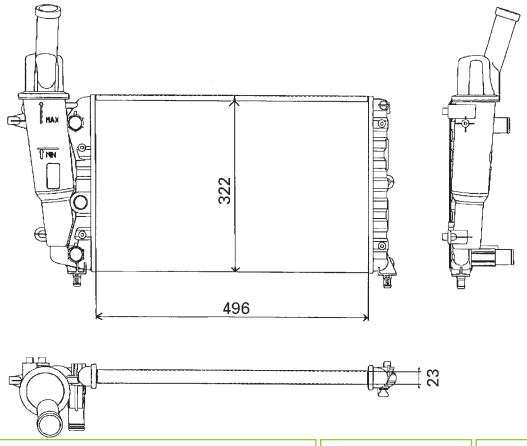


| | | |
|---|---|---|
| LANCIA 46451997 | 496x322x23 | 28mm L |
| | - | 28mm L |

## 731378 RM1019 ALM

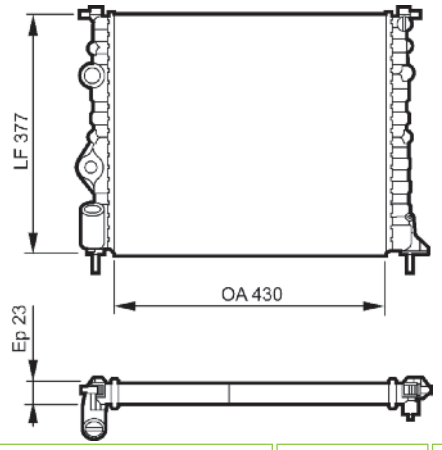


| | | |
|---|---|---|
| DACIA 7700838134<br>NISSAN 2140000QAZ<br>RENAULT 7700838134 | 430x377,5x23 | 32mm L |
| | | 32mm L |

## 731379 RM1020 ALM

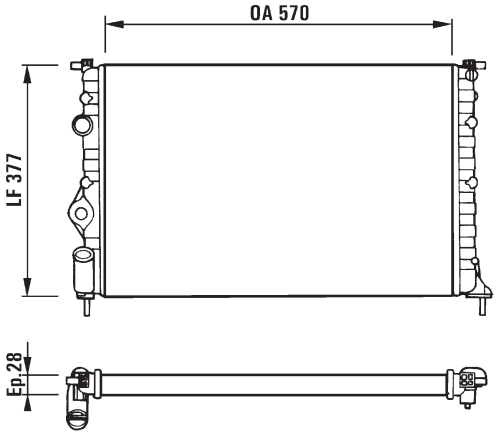


| | | |
|---|---|---|
| RENAULT 7700838135 | 570x377,5x28 | 32mm L |
| | | 32mm L |

## 731380 RA1008 ALB

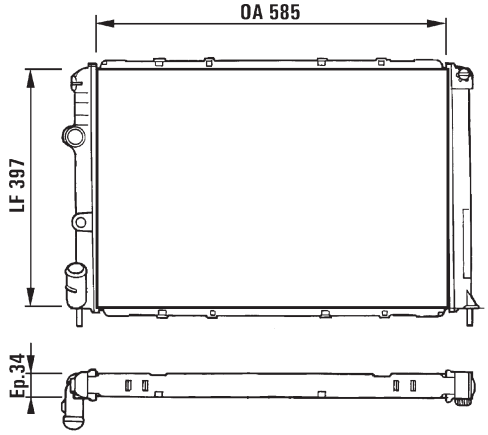


| | | |
|---|---|---|
| RENAULT 7701352605 | 585x397,5x34, 5 | 32mm L |
| | | 32mm L |

## 731381 RM1028 ALM

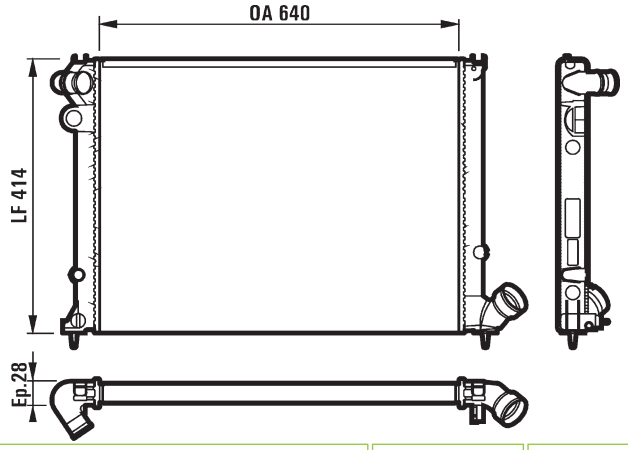


| | | |
|---|---|---|
| PEUGEOT 1301GA | 640x414x28 | 32mm L |
| | | QC |

## 731382 RM1105 ALM

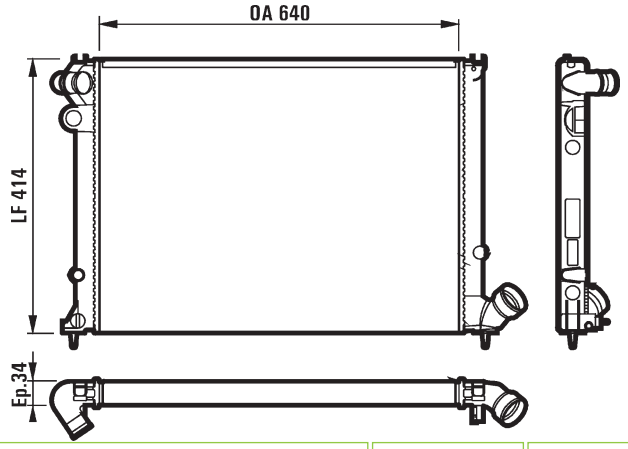


| | | |
|---|---|---|
| PEUGEOT 1301GE | 640x414x34 | 40mm L |
| | | 40mm QC |

## 731383 RM1027 ALM

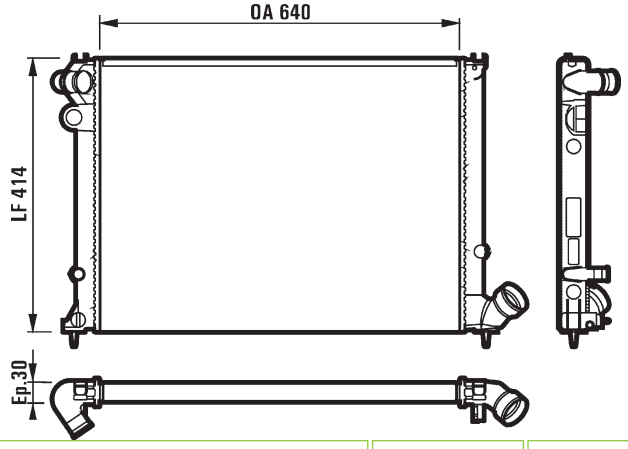


| | | |
|---|---|---|
| PEUGEOT 1301FN | 640x414x30 | 40mm L |
| | | 40mm QC |

## 731384 RM1101 ALM

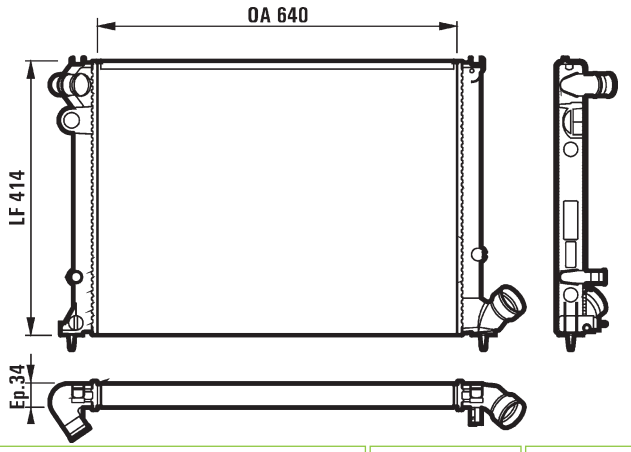


| | | |
|---|---|---|
| PEUGEOT 1301FP | 640x414x34 | 40mm L |
| | | 40mm QC |

## 731387 RM1041 ALM

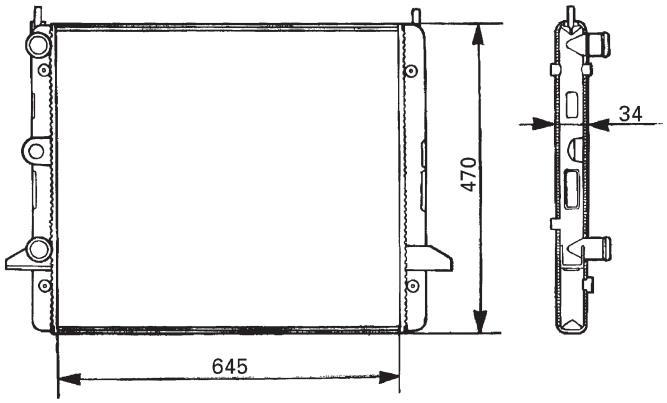


| | | |
|---|---|---|
| FORD 1022614<br>VOLKSWAGEN 7M0121253D | 645x470x34 | 32mm L |
| | | 32mm L |

## 731385 RM1039 ALM

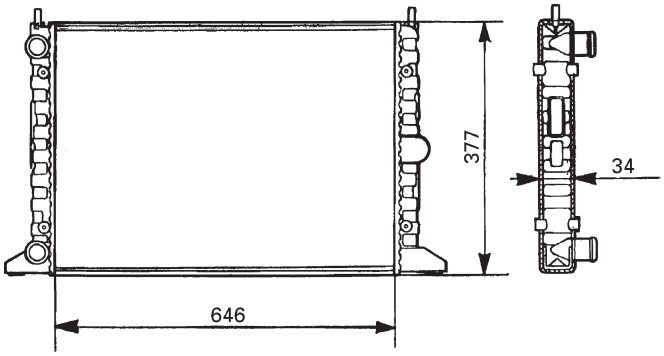


| | | |
|---|---|---|
| FORD 7258109 | 646x377x34 | 32mm L |
| | | 32mm L |

## 731389 RM1725 ALM

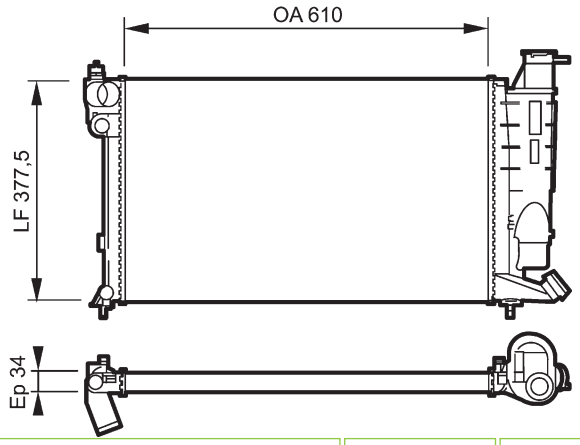


| | | |
|---|---|---|
| CITROEN 133003<br>PEUGEOT 133003 | 610x377,5x34 | 40mm L |
| | | 40mm QC |

## 731386 RM1040 ALM

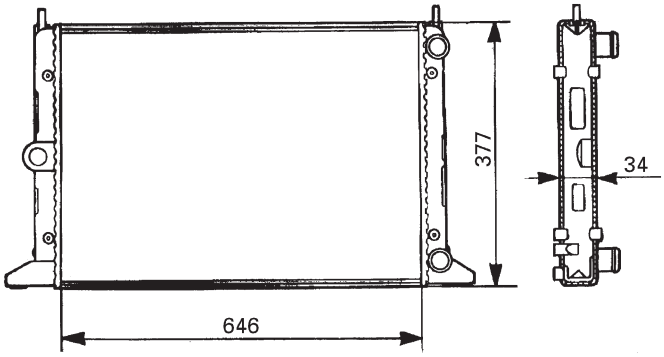


| | | |
|---|---|---|
| FORD 7258107<br>SEAT 7M0121253B<br>VOLKSWAGEN 7M0121253B | 646x377x34 | 32mm L |
| | | 32mm L |

## 731391 RM1723 ALM

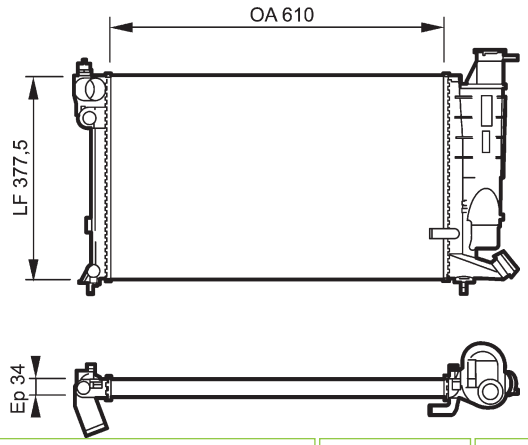


| | | |
|---|---|---|
| CITROEN 1331H9<br>PEUGEOT 1331H9 | 610x377,5x34 | 40mm L |
| | | 40mm QC |

## 731393 RM1058 ALM

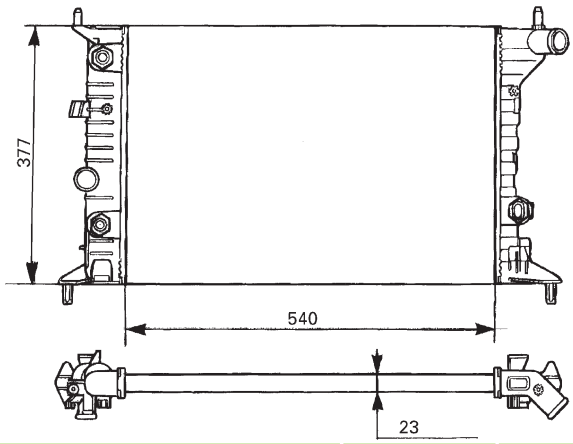


| | | |
|---|---|---|
| OPEL 1300158<br>VAUXHALL 90499823 | 540x377x23 | 34mm L |
| + | | 34mm L |

## 731409 CBS

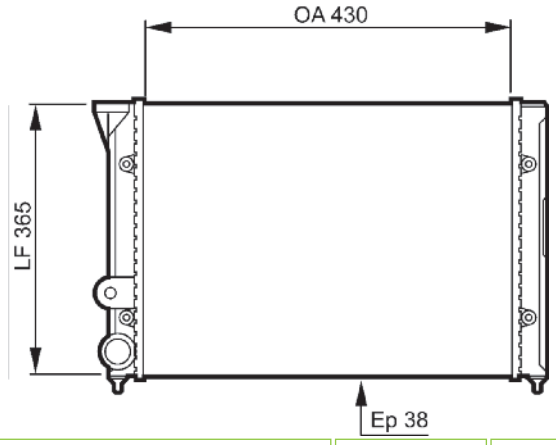


| | | |
|---|---|---|
| ROVER PCC103980 | 280x367x54 | L |
| - | | L |

## 731401 ALB

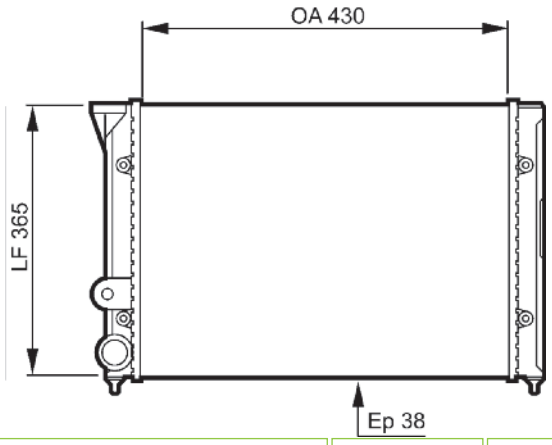


| | | |
|---|---|---|
| VOLKSWAGEN 535121251B | 427x322x38 | 38mm QC |
| - | | 38mm QC |

## 731411 CBS

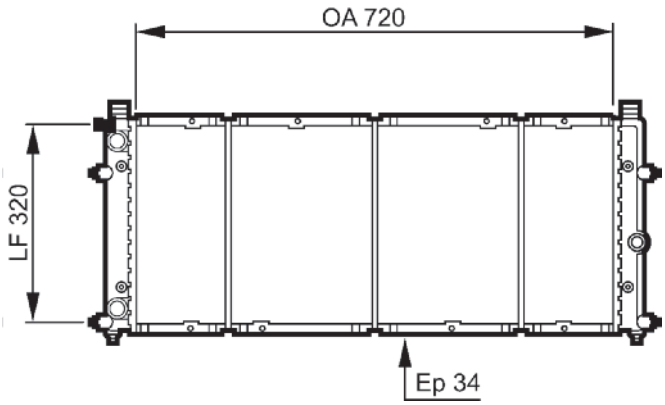


| | | |
|---|---|---|
| VOLKSWAGEN 701121253B | 720x320x34 | 32mm L |
| - | | 32mm L |

## 731406 CBS

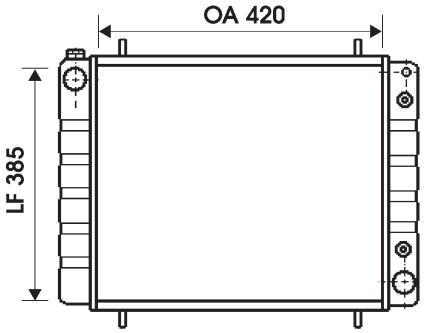


| | | |
|---|---|---|
| LAND ROVER BTP1823 | 420x385x51 | 35mm L |
| + | | 35mm L |

## 731412 CBS

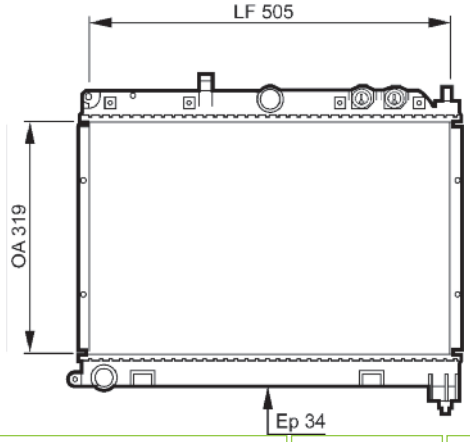


| | | |
|---|---|---|
| ROVER GRD922 | 319x505x34 | 32mm L |
| - | | 32mm L |

## 731417 CBS

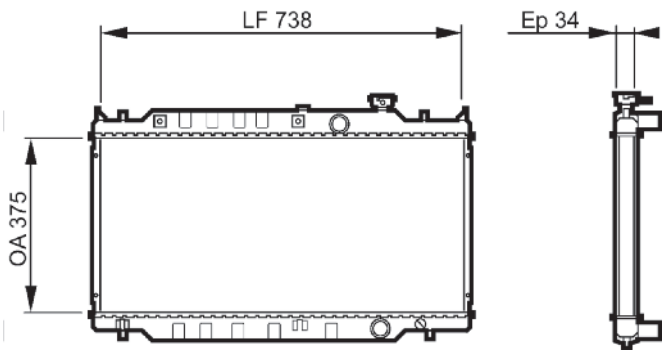


| | | |
|---|---|---|
| MAZDA RFG215200B | 375x738x34 | 35mm L |
| | - | 35mm L |

## 731428 ALB

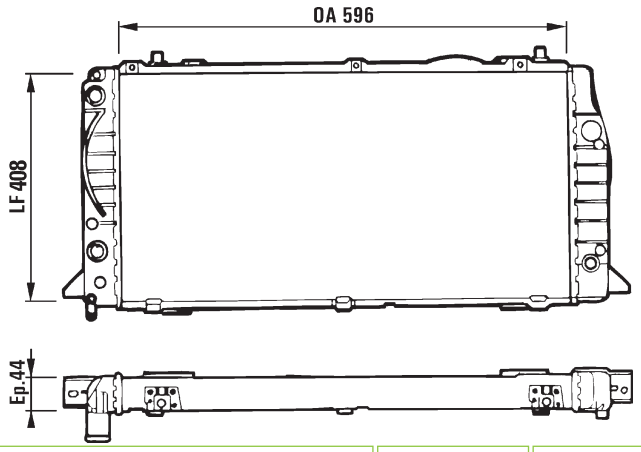


| | | |
|---|---|---|
| AUDI 8A0121251A | 596x358x44 | 32mm L |
| | + | 32mm L |

## 731421 RAB014 ALB

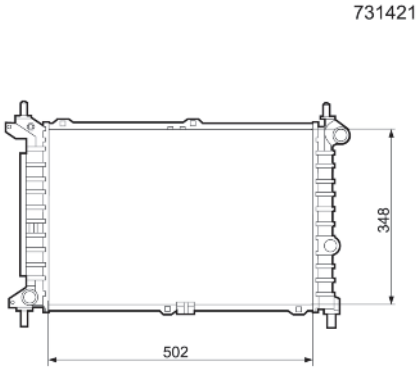


| | | |
|---|---|---|
| OPEL 6302011<br>VAUXHALL 90510645 | 502x348x42 | 34mm L |
| | - | 34mm L |

## 731429 ALB

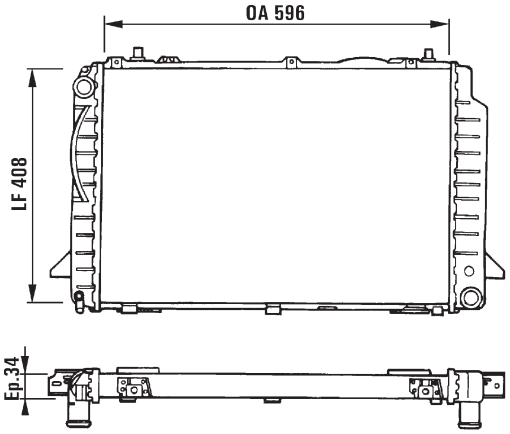


| | | |
|---|---|---|
| AUDI 8A0121251B | 596x408x34 | 32mm L |
| | - | 32mm L |

## 731422 ALB

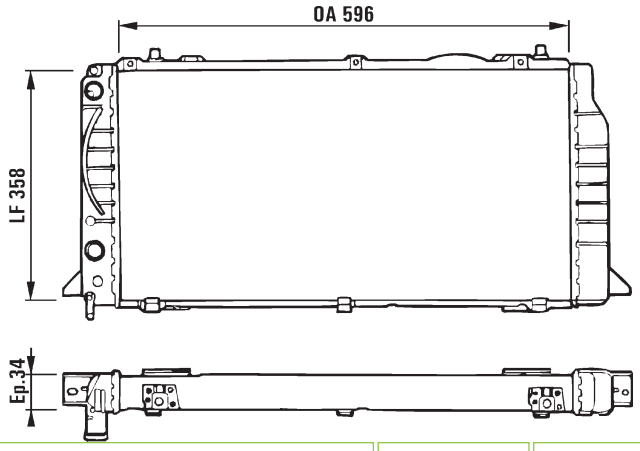


| | | |
|---|---|---|
| AUDI 8A0121251 | 596x358x34 | 32mm L |
| | - | 32mm L |

## 731430 ALB

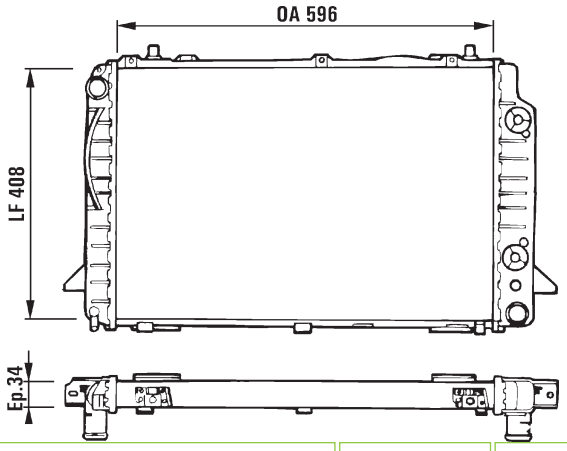


| | | |
|---|---|---|
| AUDI 8A0121251C | 596x408x34 | 32mm L |
| | + | 32mm L |

## 731434 RAB029 ALB

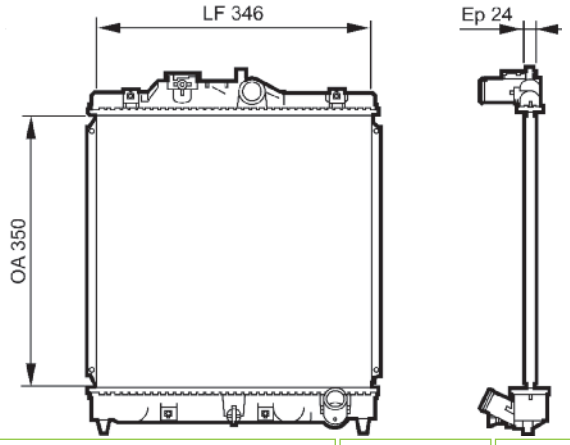


| | | | |
|---|---|---|---|
| HONDA | 19010P1KE01 | 350x346x24 | 28mm L |
| | | | 28mm L |

## 731441 RAB027 ALB

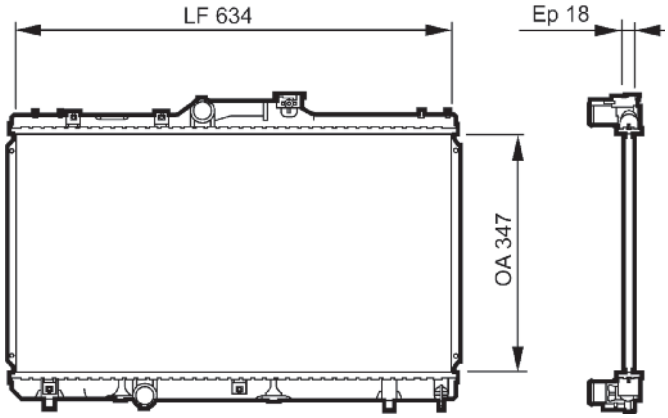


| | | | |
|---|---|---|---|
| TOYOTA | 1640016530 | 347x634x18 | 32mm L |
| | | | 32mm L |

## 731437 ALB

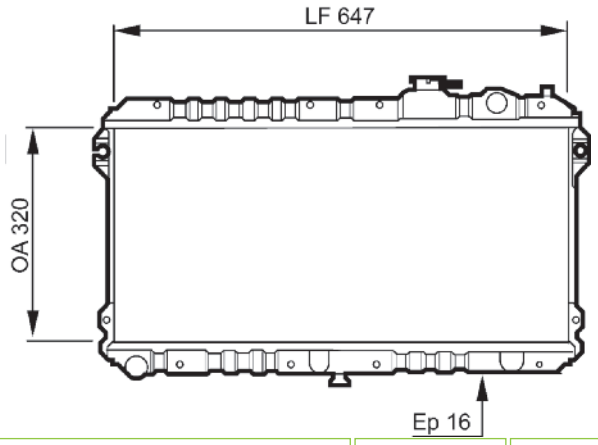


| | | | |
|---|---|---|---|
| MAZDA | BPE815200 | 320x647x16 | 31mm L |
| | | | 31mm L |

## 731451 ALB

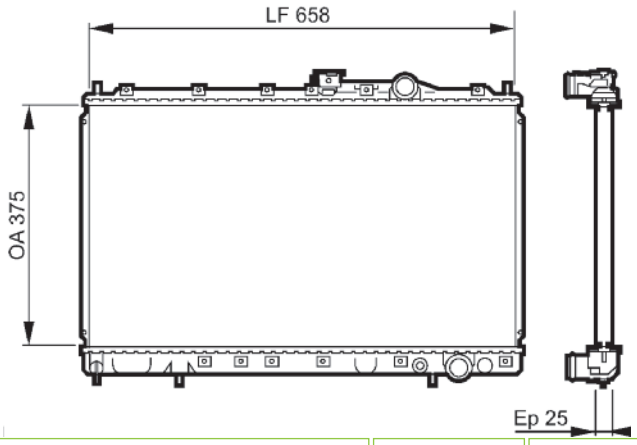


| | | | |
|---|---|---|---|
| MITSUBISHI | MB660566 | 375x658x25 | 35mm L |
| | | | 35mm L |

## 731438 ALB

731438

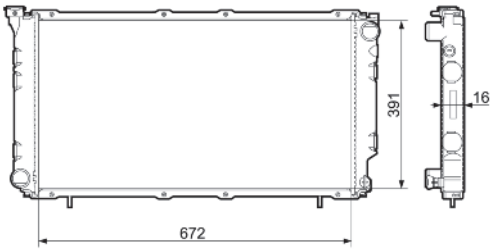


| | | | |
|---|---|---|---|
| SUBARU | 45199AA220 | 672x391x16 | 38mm L |
| | | | 38mm L |

## 731456 CBS

731456

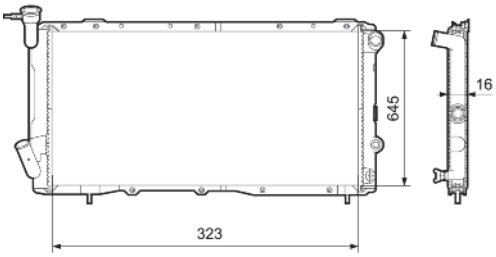


| | | | |
|---|---|---|---|
| SUBARU | 45111GA650 | 645x323x16 | 30mm L |
| | | | 30mm L |

## 731458 ALB

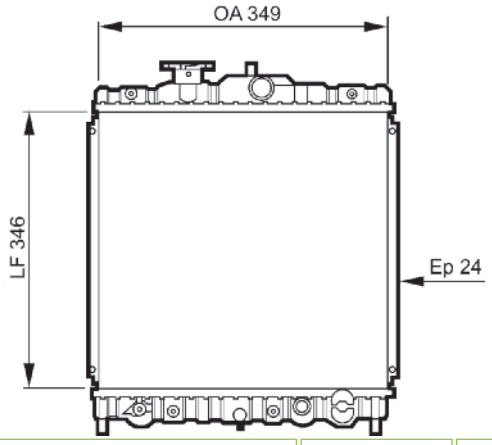


| | | |
|---|---|---|
| HONDA 19010P1KE51 | 349x346x24 | 28mm L |
| | + | 28mm L |

## 731459 ALB

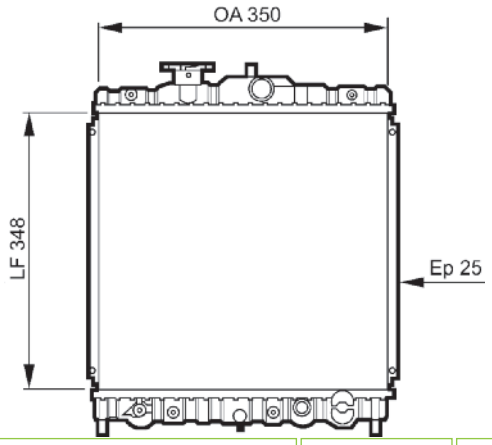


| | | |
|---|---|---|
| HONDA 19010P28G52 | 350x348x25 | 28mm L |
| | + | 28mm L |

## 731461 ALB

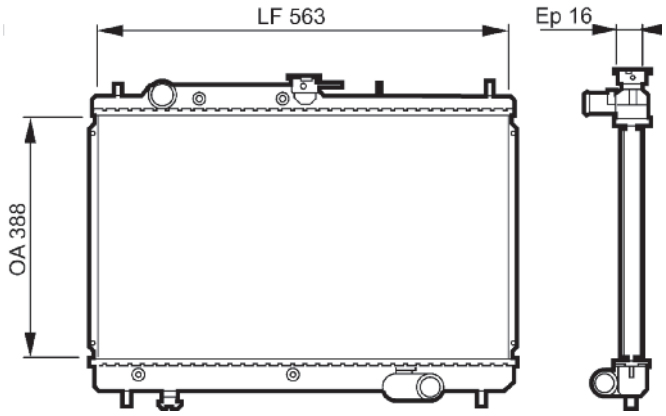


| | | |
|---|---|---|
| MAZDA B61S15200C | 388x563x16 | 32mm L |
| | - | 32mm L |

## 731462 ALB

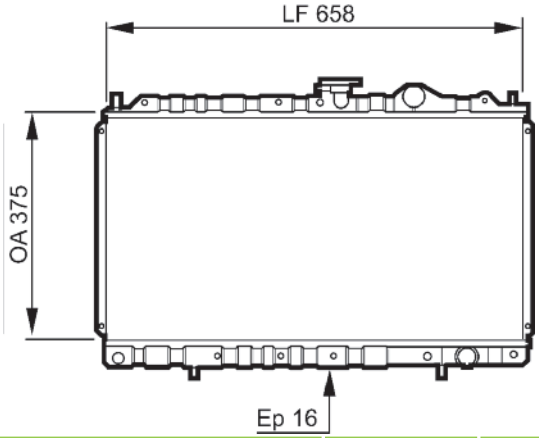


| | | |
|---|---|---|
| MITSUBISHI MB660213 | 375x658x16 | 35mm L |
| | - | 35mm L |

## 731463 CBS

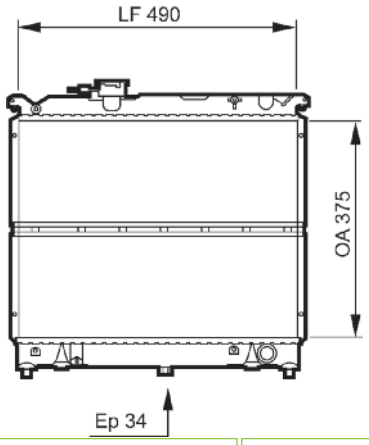


| | | |
|---|---|---|
| SUZUKI 1770060A11 | 375x490x34 | 28mm L |
| | + | 28mm L |

## 731464 CBS

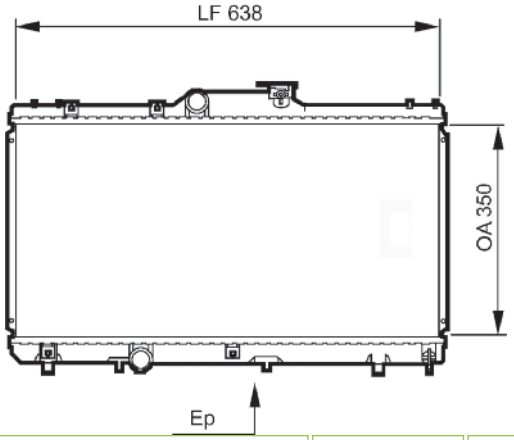


| | | |
|---|---|---|
| TOYOTA 1640015501 | 350x638x16 | 31mm L |
| | + | 31mm L |

## 731466

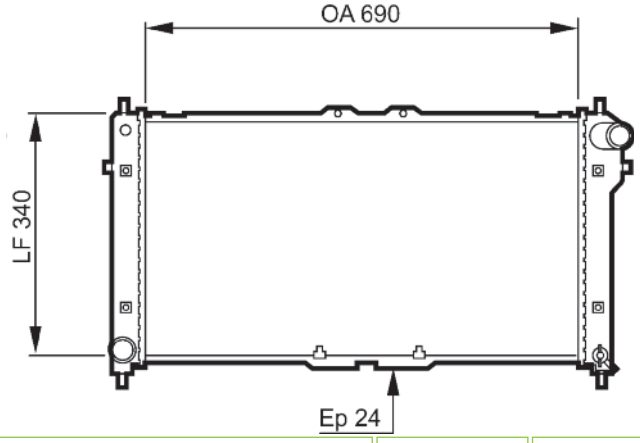


| | | | |
|---|---|---|---|
| MAZDA | KL1915200F | 690x340x24 | 35mm L |
| | | - | 35mm L |

## 731471 ALB

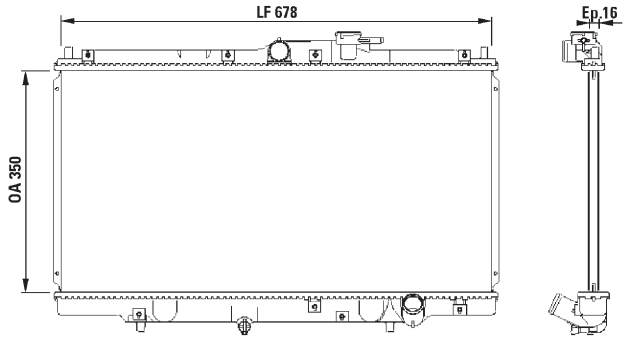


| | | | |
|---|---|---|---|
| HONDA | 19010P45G01 | 350x678x16 | 32mm L |
| | | - | 32mm L |

## 731467 CBS

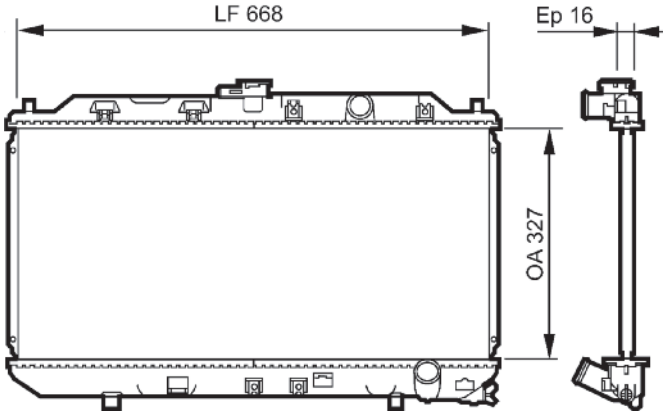


| | | | |
|---|---|---|---|
| HONDA | 19010PG7305 | 327x668x16 | 32mm L |
| | | - | 32mm L |

## 731472 ALB

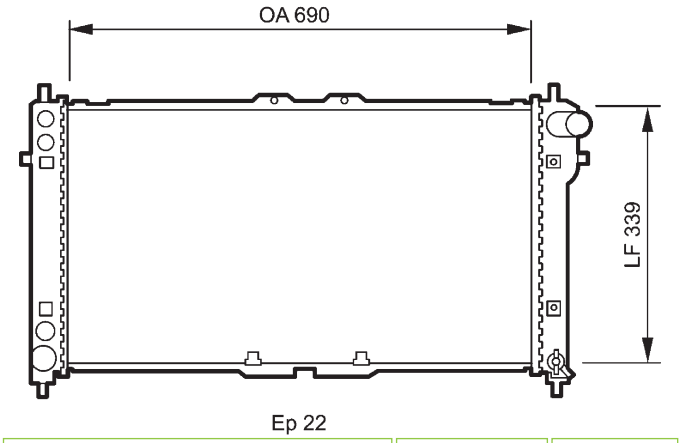


| | | | |
|---|---|---|---|
| MAZDA | KL2015200G | 690x339x22 | 35mm L |
| | | + | 35mm L |

## 731469 ALB

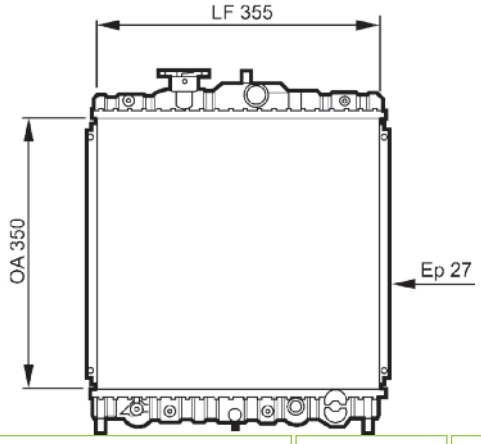


| | | | |
|---|---|---|---|
| HONDA | 19010P30G03 | 350x355x27 | 32mm L |
| | | - | 32mm L |

## 731474 ALB

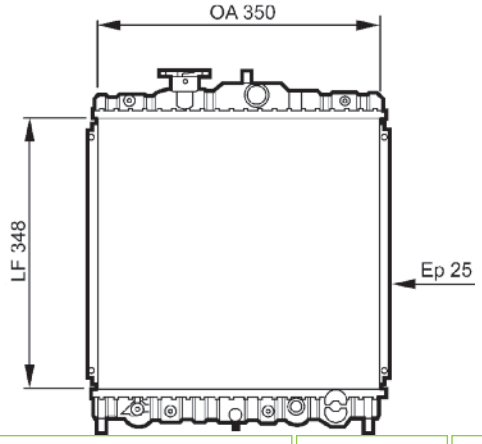


| | | | |
|---|---|---|---|
| HONDA | 19010P2FA51 | 350x348x25 | 32mm L |
| | | + | 32mm L |

## 731477 CBS

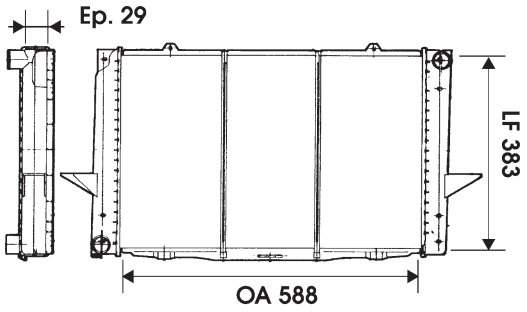


| | | |
|---|---|---|
| VOLVO 86013539 | 588x383x29 | 37mm L |
| | + | 37mm L |

## 731492 CBS

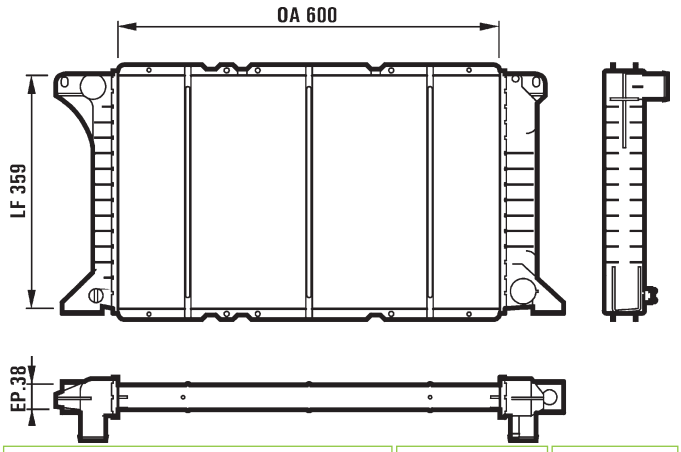


| | | |
|---|---|---|
| FORD 6912241 | 600x359x34 | 38mm L |
| | - | 38mm L |

## 731486 CBS

Picture not available
Image non disponible
Imagen no disponible
Immagine non disponibile
Nicht verfügbares Bild
Brak zdjęcia
Картина недоступна

| | | |
|---|---|---|
| BEDFORD 91123003<br>G.M.E. 91123003<br>VAUXHALL 91123003 | 240x495 | |
| | - | |

## 731498 RM1107 ALM

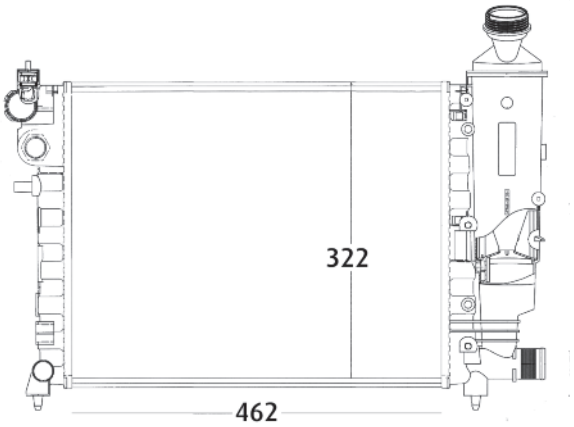


| | | |
|---|---|---|
| CITROEN 1301SQ<br>LADA SD210801301012<br>PEUGEOT 1301SQ | 390x322x23 | 32mm L |
| | - | 32mm L |

## 731491 CBS

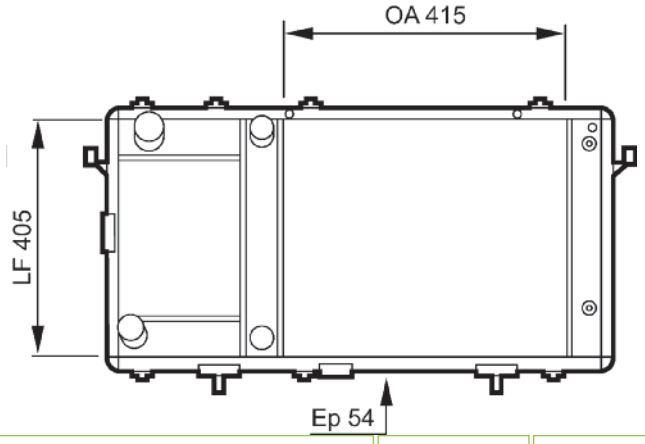


| | | |
|---|---|---|
| LAND ROVER ESR3275 | 415x405x54 | 35mm L |
| | + | 35mm L |

## 731501 ALB

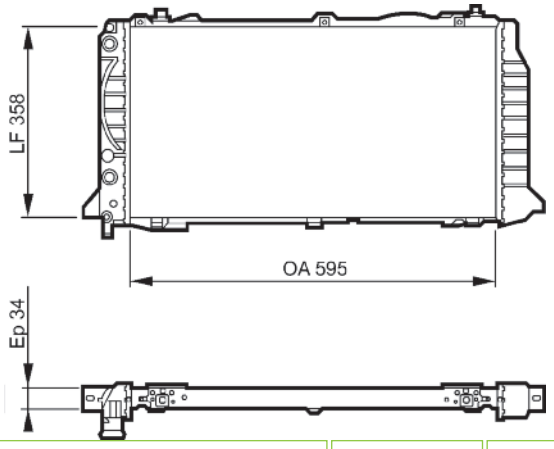


| | | |
|---|---|---|
| AUDI 893121251AA | 595x358x34 | 32mm L |
| | - | 32mm L |

## 731503 ALB

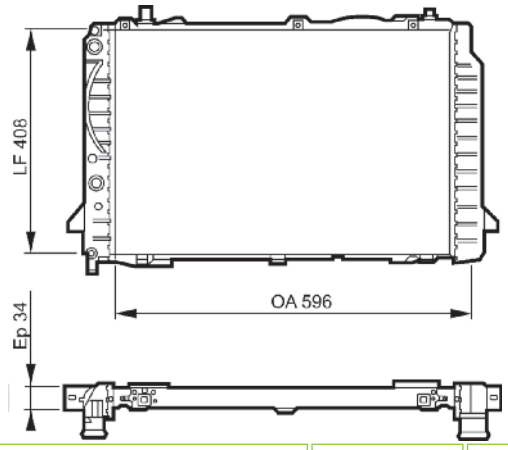


| | | | |
|---|---|---|---|
| AUDI 8A0121251E | 596x408x34 | 32mm L | |
| | - | 32mm L | |

## 731509 RAB016 ALB

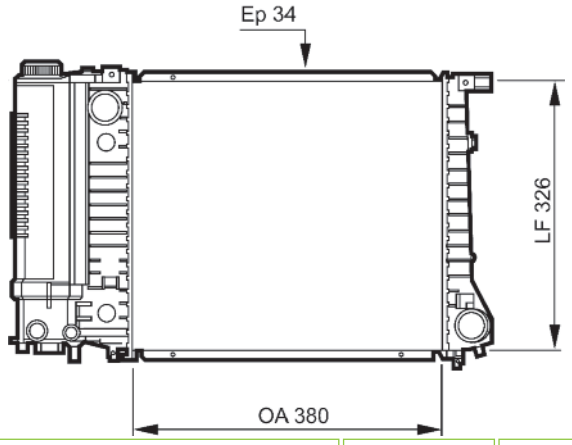


| | | | |
|---|---|---|---|
| BMW 17111719024 | 380x326x34 | 42mm L | |
| | - | 42mm L | |

## 731505 ALB

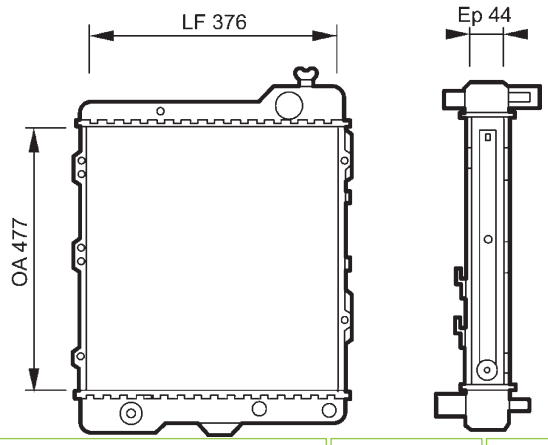


| | | | |
|---|---|---|---|
| AUDI 893121251G | 477x376x44 | 32mm L | |
| | - | 32mm L | |

## 731512 ALB

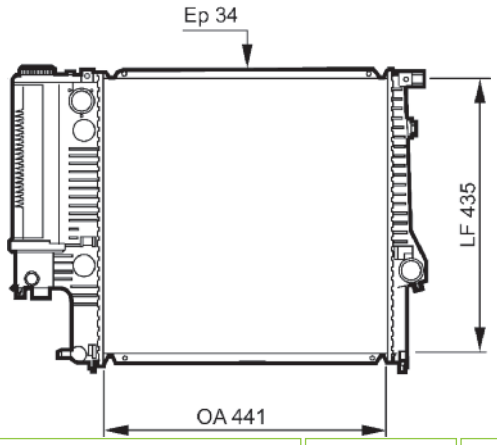


| | | | |
|---|---|---|---|
| BMW 17111723898 | 441x435x34 | 40mm L | |
| | - | 40mm L | |

## 731508 RAB017 ALB

731508

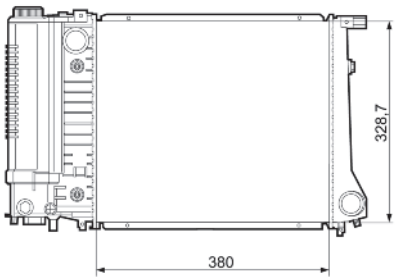


| | | | |
|---|---|---|---|
| BMW 17111712977 | 380x327x30 | 42mm L | |
| | + | 42mm L | |

## 731514 ALB

731514

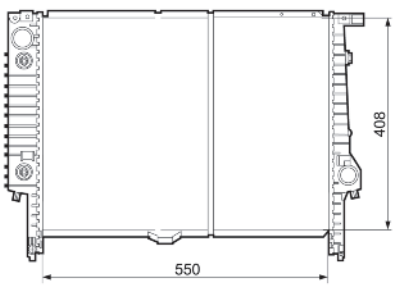


| | | | |
|---|---|---|---|
| BMW 17112244647 | 550x408x42 | 40mm L | |
| | - | 40mm L | |

## 731520 RAB045 ALB

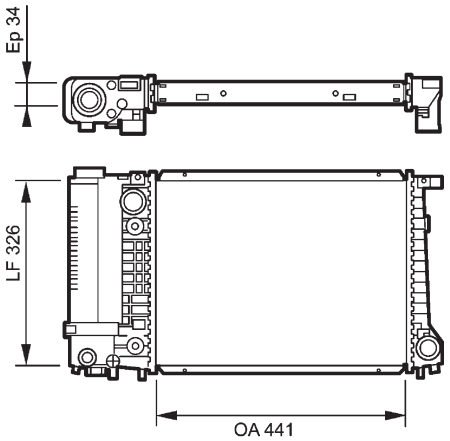


| | | |
|---|---|---|
| BMW 17111109986 | 441x326x34 | 40mm L |
| | + | 40mm L |

## 731526 RM1108 ALM

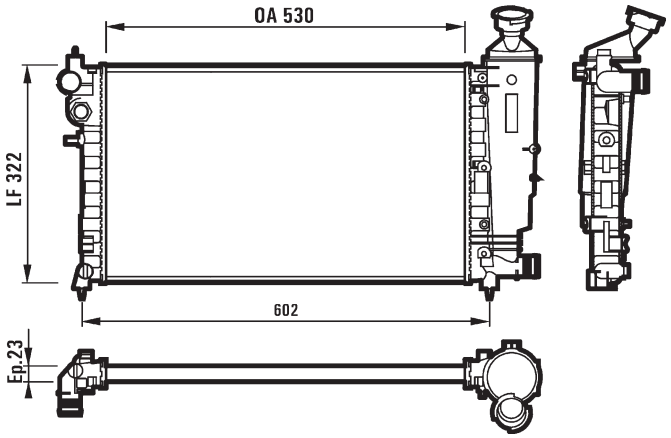


| | | |
|---|---|---|
| CITROEN 1331HQ<br>PEUGEOT 133029 | 530x322x23 | 32mm L |
| | - | 32mm L |

## 731523 ALB

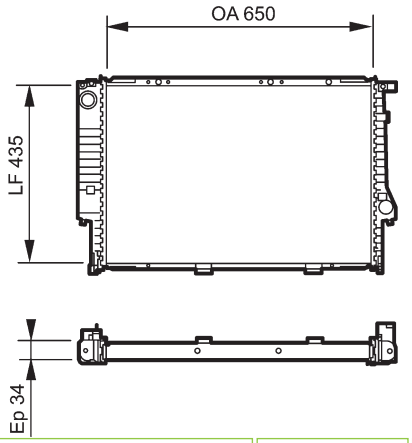


| | | |
|---|---|---|
| BMW 17111702453 | 650x435x34 | 40mm L |
| | - | 40mm L |

## 731527 RM1350 ALM

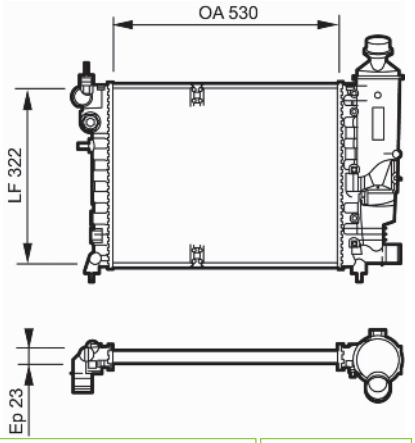


| | | |
|---|---|---|
| CITROEN 1301SX<br>PEUGEOT 1301HX | 530x322x23 | 32mm L |
| | - | 32mm L |

## 731525 RM1061 ALM

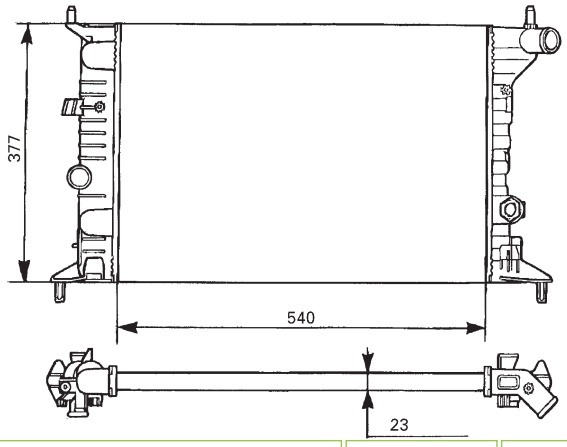


| | | |
|---|---|---|
| OPEL 90528302 | 540x377x23 | 34mm L |
| | - | 34mm L |

## 731528 RM1351 ALM

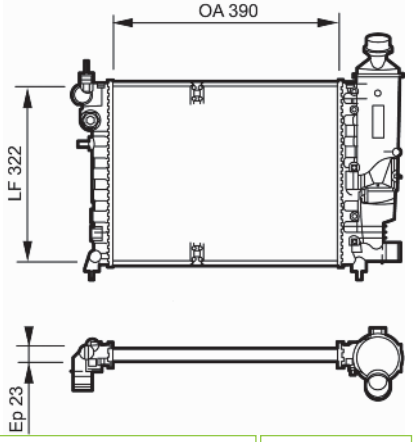


| | | |
|---|---|---|
| CITROEN 1301TA<br>PEUGEOT 1301TA | 390x322x23 | 32mm L |
| | - | 32mm L |

## 731529 RA2000 ALB

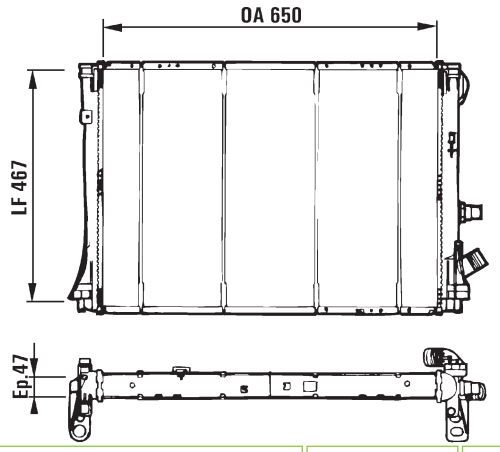


| | | |
|---|---|---|
| RENAULT 7701041957 | 650x470x34 | 32mm L |
| | | 32mm L |

## 731537 RM1059 ALM

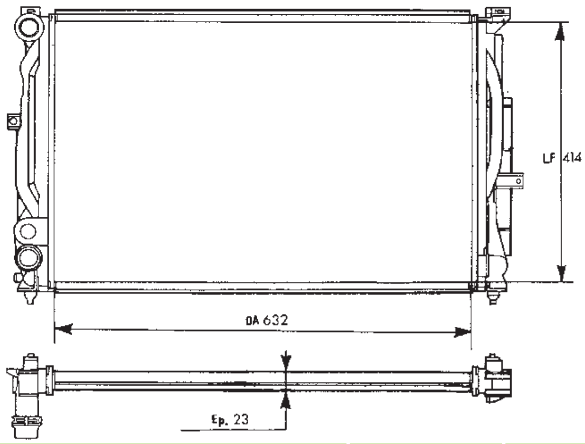


| | | |
|---|---|---|
| AUDI 8D0121251Q<br>VOLKSWAGEN 8D0121251Q | 632x414x23 | 32mm QC |
| | | 32mm QC |

## 731530 RC1094 ALB

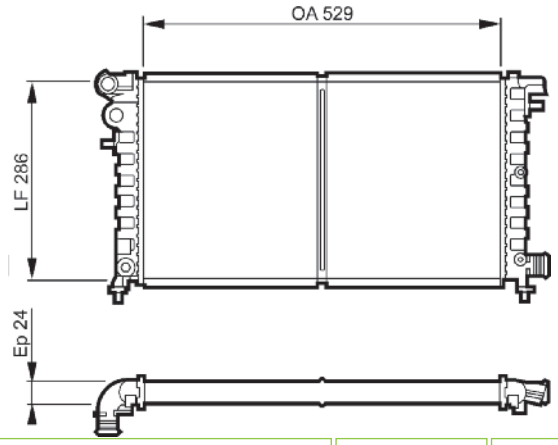


| | | |
|---|---|---|
| CITROEN 133092<br>CITROEN 133092<br>PEUGEOT 133092<br>PEUGEOT 133092 | 529x286x24 | 32mm L |
| | | 32mm L |

## 731538 RA1507 ALB

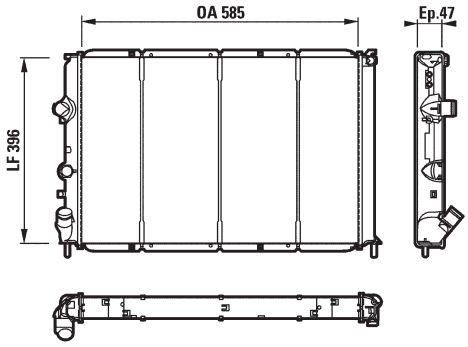


| | | |
|---|---|---|
| RENAULT 7701352606 | 585x396x34 | 32mm L |
| | | 32mm L |

## 731531 RC1061 ALB

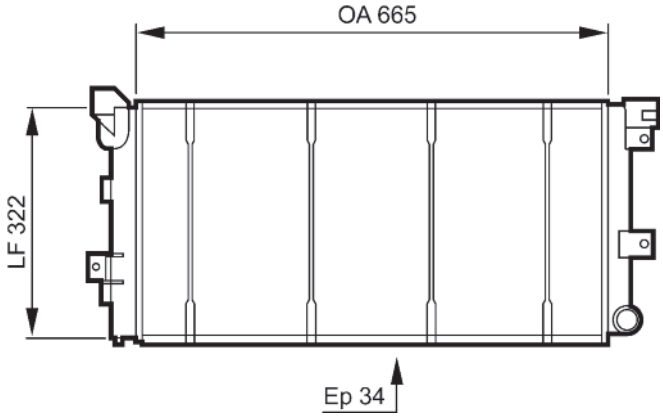


| | | |
|---|---|---|
| CHRYSLER 4798013 | 665x322x34 | 35mm L |
| | | 35mm L |

## 731550 RM1143 ALM

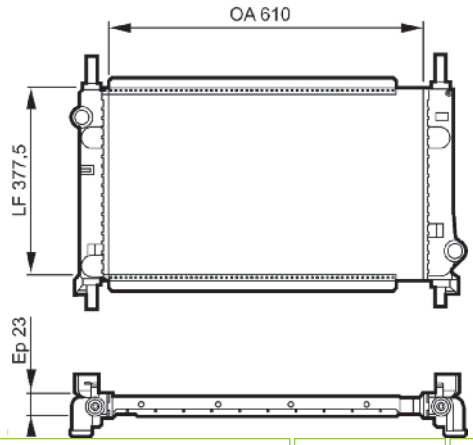


| | | |
|---|---|---|
| FORD 1086946 | 610x377,5x23 | 34mm L |
| | | 34mm L |

## 731551 RM1141 ALM

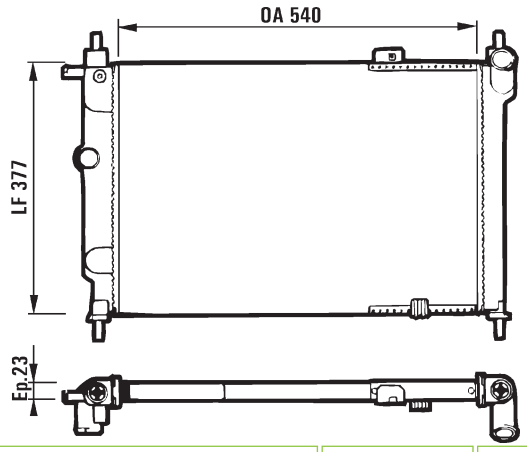


| | | |
|---|---|---|
| OPEL OPELRAR001 | 540x377,5x23 | 34mm L |
| | | 34mm L |

## 731559 RM174 ALM

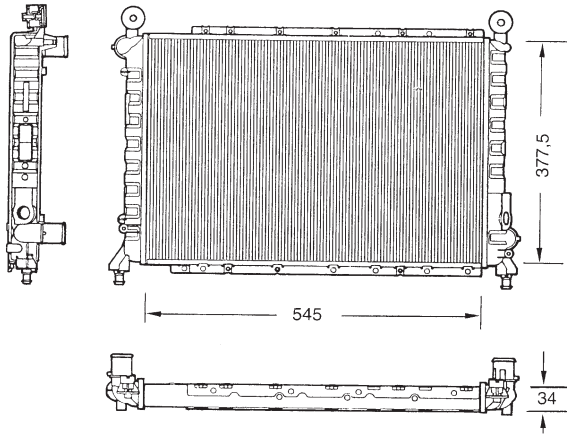


| | | |
|---|---|---|
| ALFA ROMEO 0060620437 | 545x377,5x34 | 35mm L |
| | | 35mm L |

## 731552 RM1112 ALM

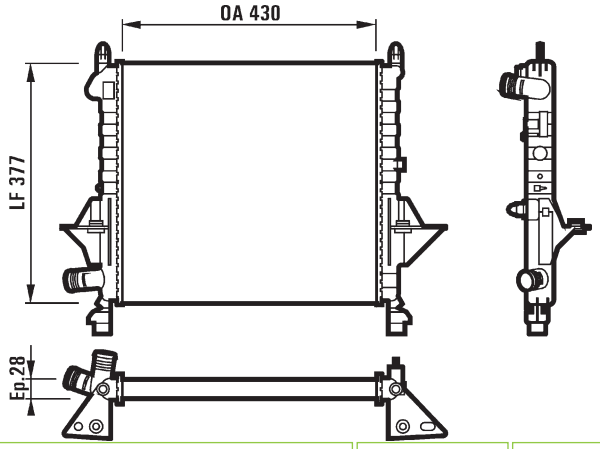


| | | |
|---|---|---|
| RENAULT 7701042436 | 430x377x28 | 32mm L |
| | | 32mm L |

## 731561 RM187 ALM

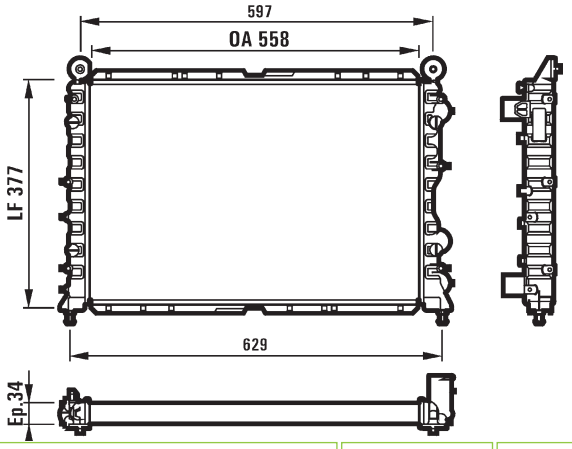


| | | |
|---|---|---|
| ALFA ROMEO 0060625330 | 558x377,5x34 | 32mm L |
| | | 32mm L |

## 731558 RM137 ALM

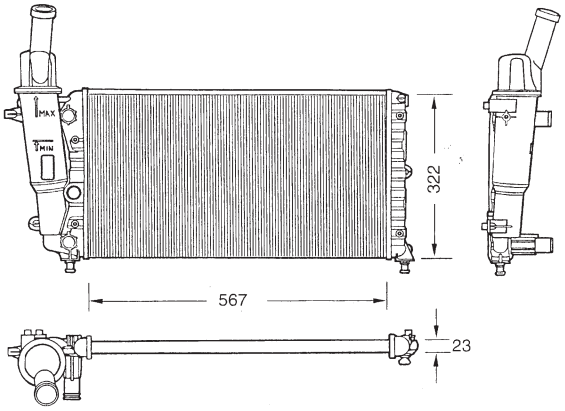


| | | |
|---|---|---|
| FIAT 46465017 | 567x322x23 | 31mm L |
| | | 31mm L |

## 731562 RM138 ALM

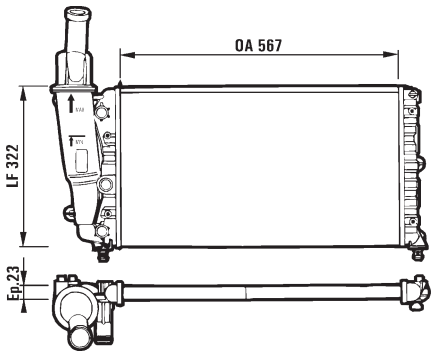


| | | |
|---|---|---|
| FIAT 46465021<br>LANCIA 46465021 | 567x322x23 | 28mm L |
| | | 28mm L |

## 731565 ALB

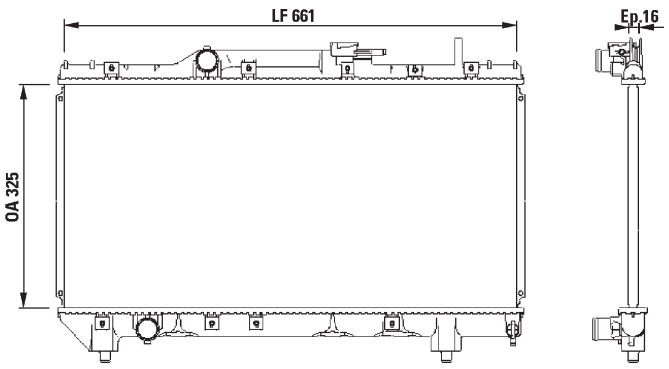


| | | |
|---|---|---|
| TOYOTA 1640016470 | 325x661x16 | 31mm L |
| | | 31mm L |

## 731568 CBS

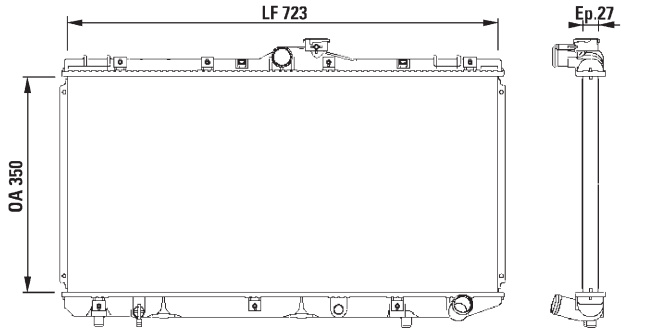


| | | |
|---|---|---|
| TOYOTA 1640064651 | 350x723x27 | 31mm L |
| | | 31mm L |

## 731569 CBS

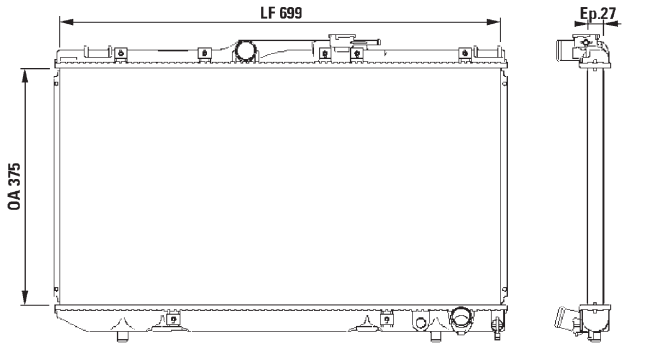


| | | |
|---|---|---|
| TOYOTA 1640064731 | 375x699x27 | 31mm L |
| | | 31mm L |

## 731570 RM1083 ALM

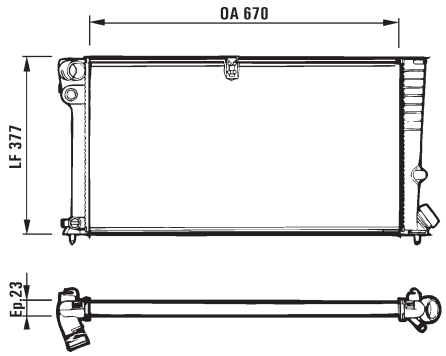


| | | |
|---|---|---|
| CITROEN 133056<br>PEUGEOT 133056 | 670x377,5x23 | 40mm L |
| | | 40mm QC |

## 731572 RM141 ALM

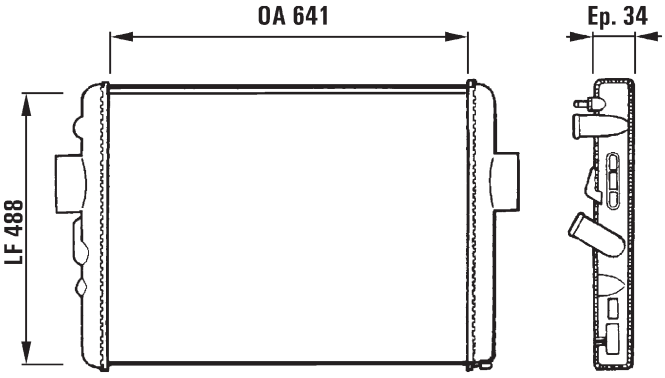


| | | |
|---|---|---|
| IVECO 93825378 | 641x488x34 | 38mm L |
| | | 38mm L |

## 731574 RM1026 ALM

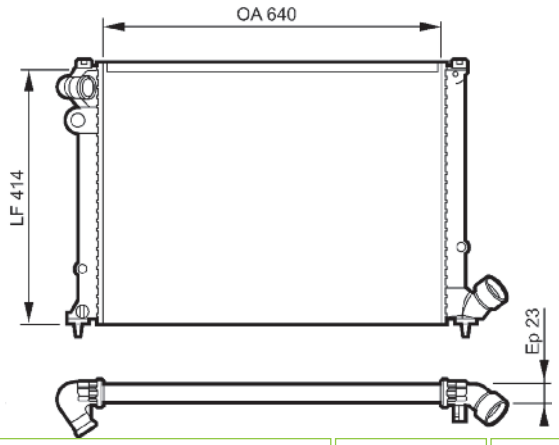


| | | |
|---|---|---|
| PEUGEOT 133014 | 640x414x23 | 32mm L |
| | | 32mm QC |

## 731575 RM1030 ALM

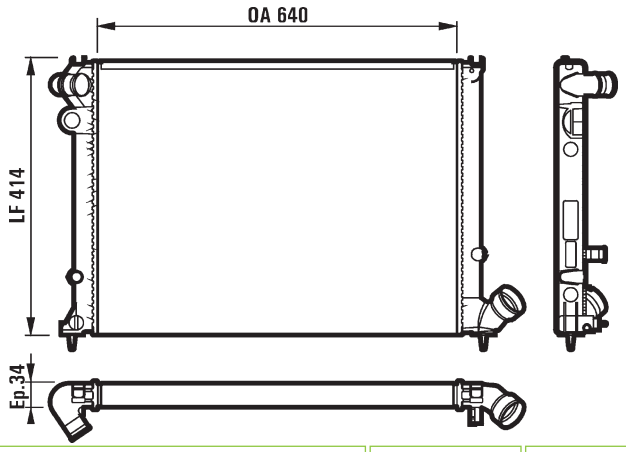


| | | |
|---|---|---|
| PEUGEOT 133015 | 640x414x34 | 32mm L |
| | | 32mm QC |

## 731592 RM164 ALM

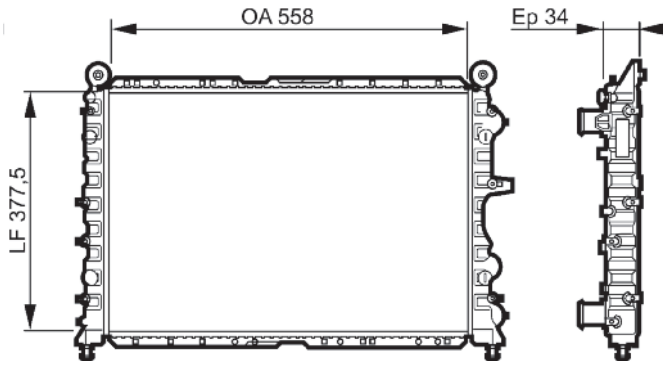


| | | |
|---|---|---|
| FIAT 71735370<br>LANCIA 46551214 | 558x377,5x34 | 35mm L |
| | | 35mm L |

## 731586 CBS

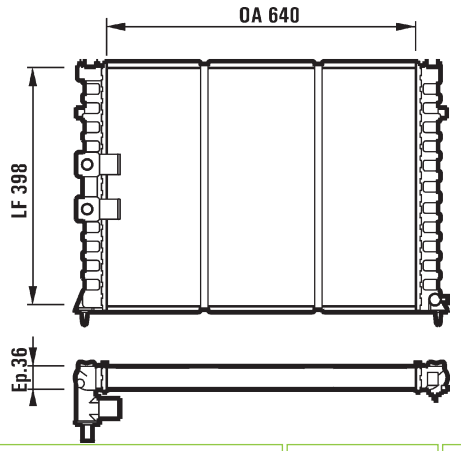


| | | |
|---|---|---|
| PEUGEOT 133027 | 398x640x36 | 36mm L |
| | | 36mm L |

## 731593 RA2047 CBS

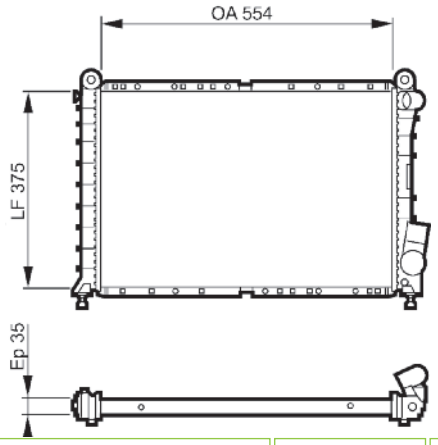


| | | |
|---|---|---|
| FIAT 71735354 | 554x375x35 | 35mm L |
| | | 35mm L |

## 731591 RM165 ALM

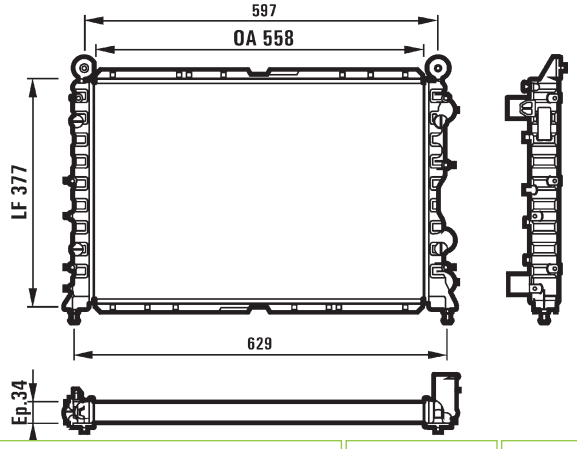


| | | |
|---|---|---|
| ALFA ROMEO 71736177 | 558x377x34 | 35mm L |
| | | 35mm L |

## 731594 RM1735 ALM

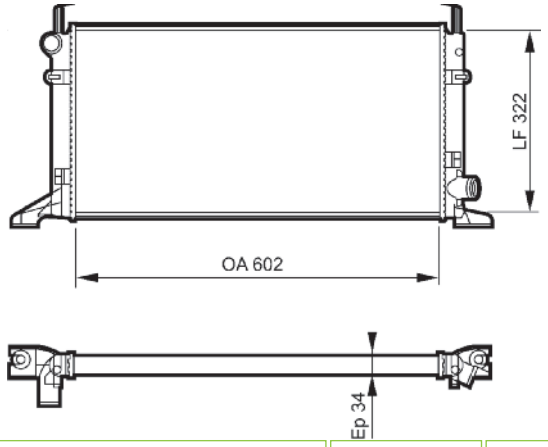


| | | |
|---|---|---|
| FORD 6148704 | 601x322x34 | 34mm L |
| | | 34mm L |

## 731595 RM1736 ALM

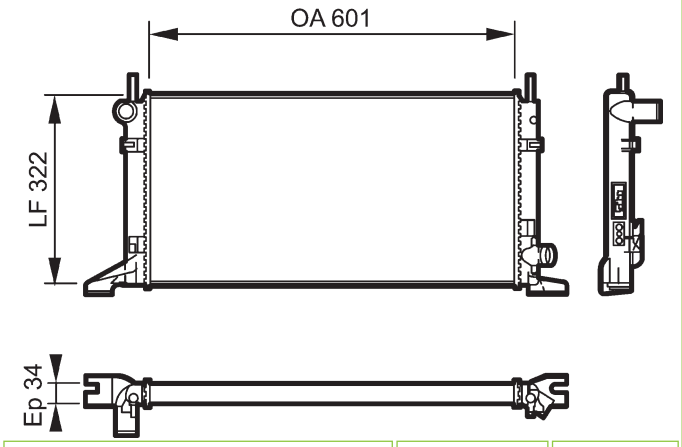


| | | |
|---|---|---|
| FORD 6525326 | 601x322x34 | 34mm L |
| | | 34mm L |

## 731607 RM1045 ALM

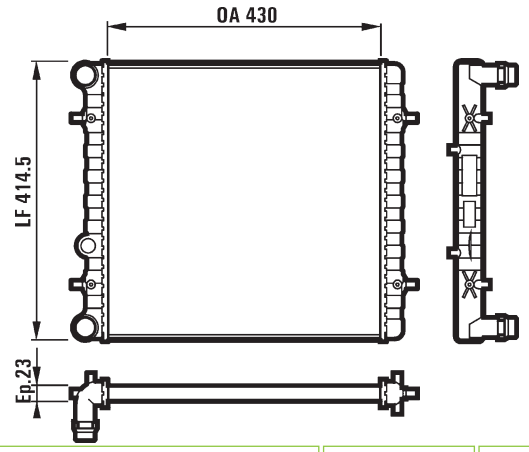


| | | |
|---|---|---|
| SEAT 1J0121253G<br>SKODA 1J0121253G<br>VOLKSWAGEN 1J0121253G | 430x414x23 | 32mm QC |
| | | 32mm QC |

## 731605 RM1182 ALM

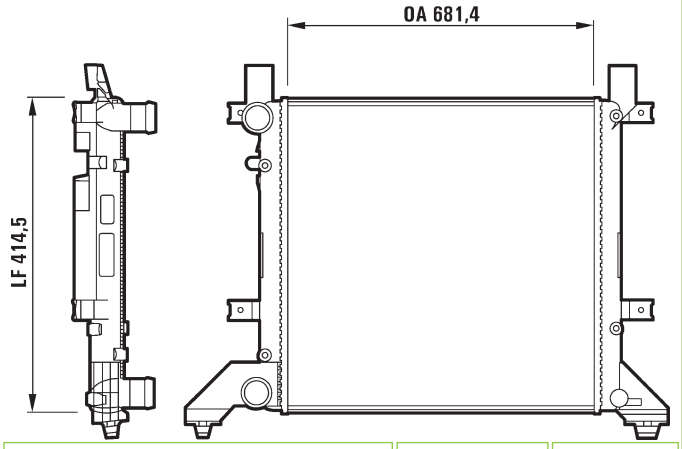


| | | |
|---|---|---|
| VOLKSWAGEN 2D0121253B | 682x414.5 | 38mm L |
| | | 38mm L |

## 731611 RM1759 ALM

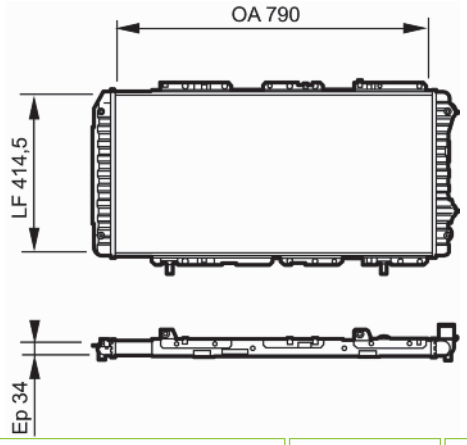


| | | |
|---|---|---|
| CITROEN 133098<br>CITROEN 133098<br>FIAT 1341514080<br>FIAT 1341514080<br>PEUGEOT 133097<br>PEUGEOT 133097 | 790x414,5x34 | 38mm L |
| | | 38mm L |

## 731606 RM1185 ALM

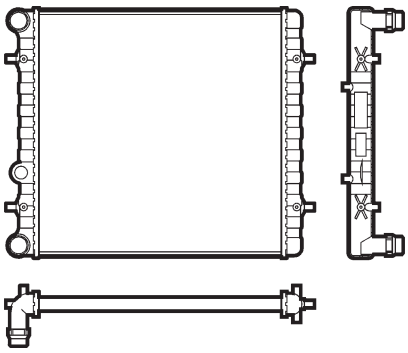

| | | |
|---|---|---|
| AUDI 1J0121253P<br>SEAT 1J0121253AD<br>SKODA 1J0121253AD<br>VOLKSWAGEN 1J0121253AD | 650x414,5x34 | 32mm QC |
| | | 32mm QC |

## 731616 RM1042 ALM

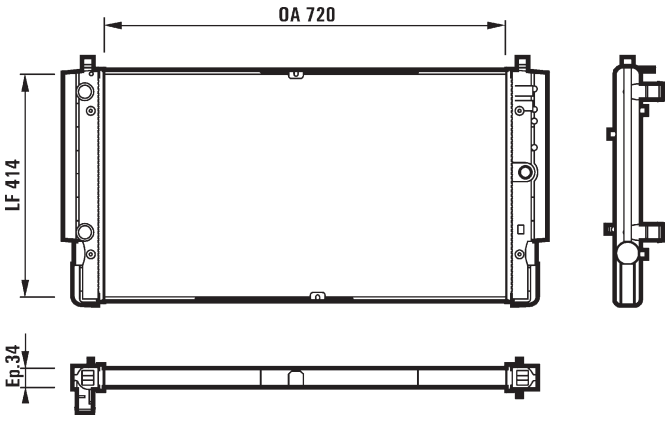


| | | |
|---|---|---|
| VOLKSWAGEN 7D0121253 | 720x414x34 | 32mm L |
| | | 32mm L |

## 731617 6TA093A ALM

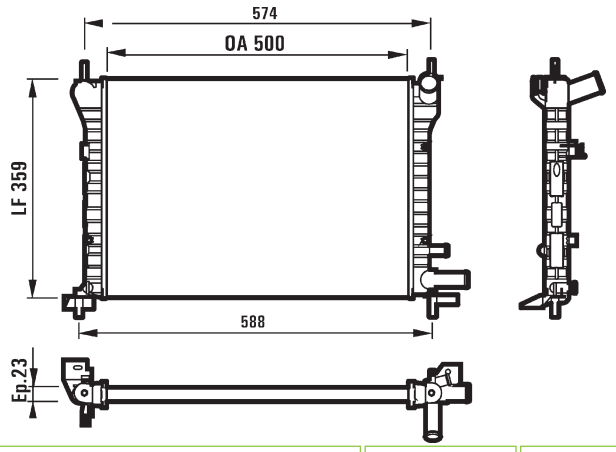


| | | |
|---|---|---|
| FORD 1001856<br>MAZDA 1E0315200A | 500x359x23 | 27mm L |
| - | | 27mm L |

## 731625 CBS

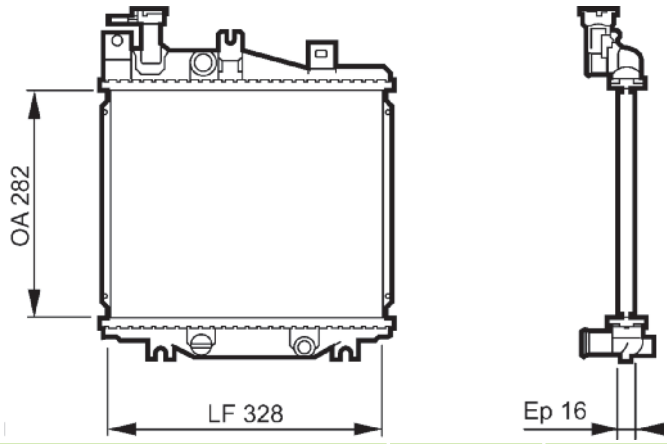


| | | |
|---|---|---|
| DAIHATSU 1640087752000 | 282x328x16 | 25mm L |
| - | | 25mm L |

## 731620 ALB

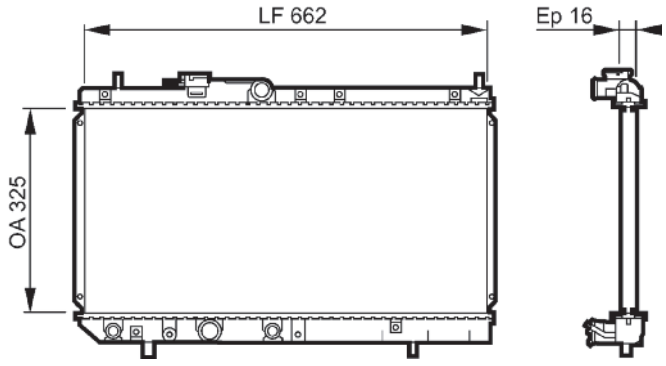


| | | |
|---|---|---|
| DAIHATSU 1640087F42000 | 325x662x16 | 32mm L |
| - | | 32mm L |

## 731629 ALB

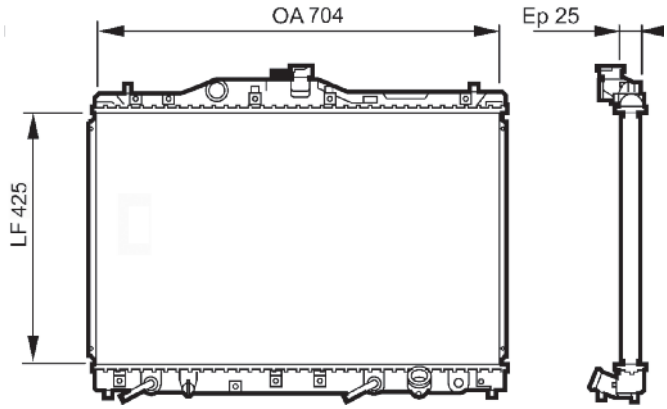


| | | |
|---|---|---|
| HONDA 19010PY3902 | 425x704x25 | 32mm L |
| + | | 32mm L |

## 731623 CBS

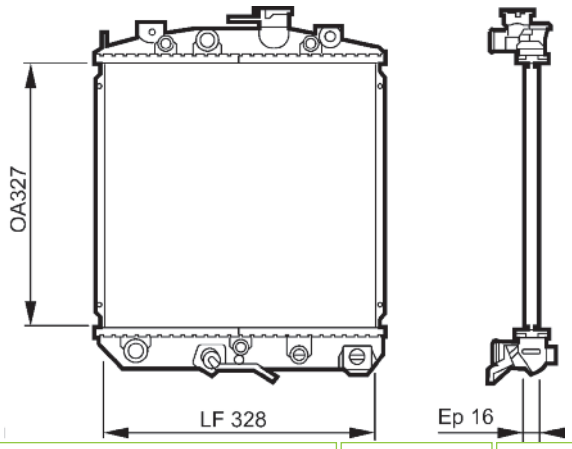


| | | |
|---|---|---|
| DAIHATSU 1640087226000 | 327x328x16 | 25mm L |
| + | | 25mm L |

## 731630 CBS

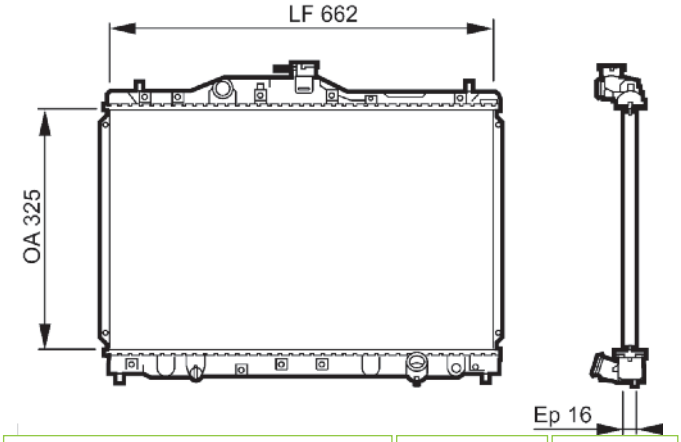


| | | |
|---|---|---|
| HONDA 19010PY3A02 | 425x704x25 | 32mm L |
| - | | 32mm L |

## 731634 CBS

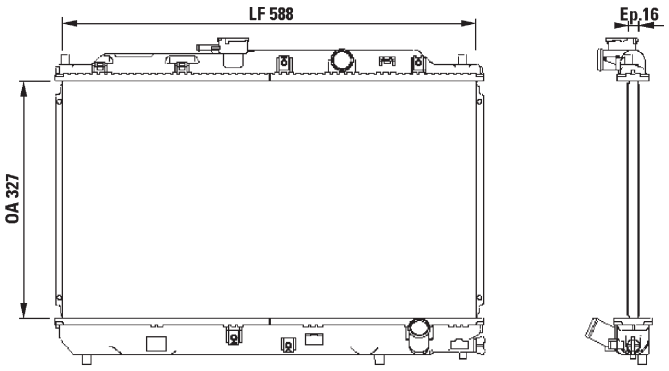


| | | |
|---|---|---|
| HONDA 19010PM8A02 | 327x588x16 | 28mm L |
| - | | 28mm L |

## 731639 CBS

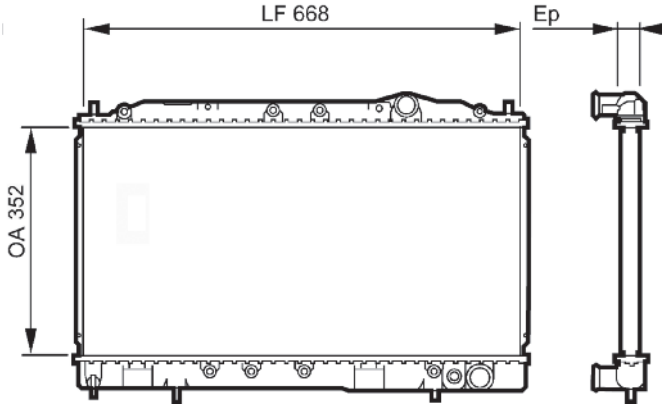


| | | |
|---|---|---|
| MITSUBISHI MB538509 | 352x668x32 | 35mm L |
| - | | 35mm L |

## 731635 CBS

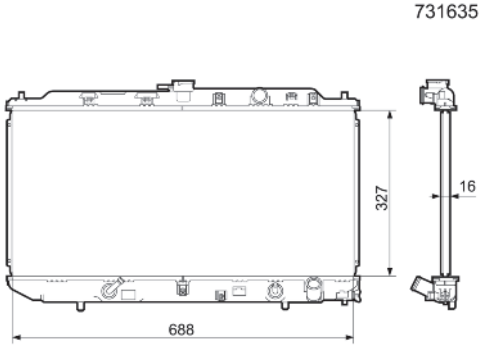


| | | |
|---|---|---|
| HONDA 19010PM5405 | 327x688x16 | 28mm L |
| + | | 28mm L |

## 731641 CBS

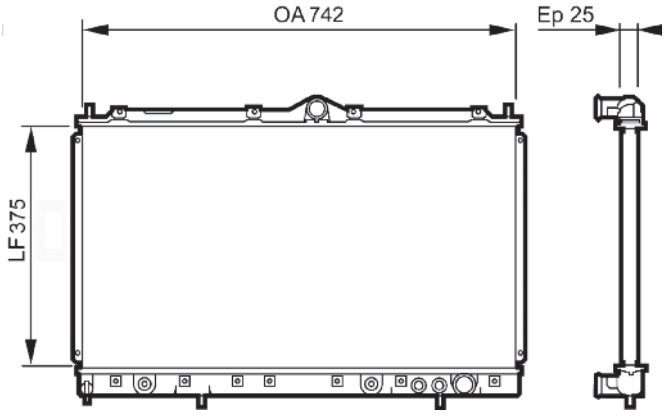


| | | |
|---|---|---|
| MITSUBISHI MB605455 | 375x742x25 | 35mm L |
| - | | 35mm L |

## 731638 CBS

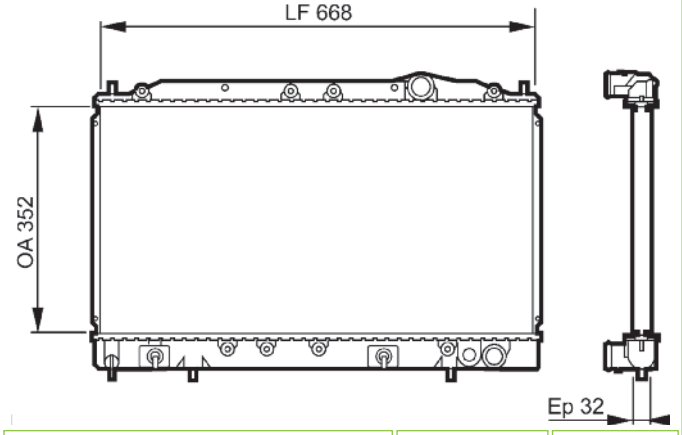


| | | |
|---|---|---|
| MITSUBISHI MB538506 | 352x668x32 | 35mm L |
| + | | 35mm L |

## 731642 CBS

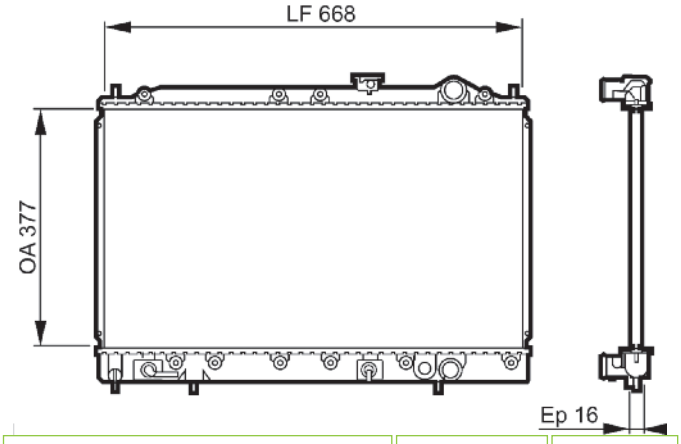


| | | |
|---|---|---|
| MITSUBISHI MB538548 | 377x668x16 | 28mm L |
| + | | 35mm L |

## 731646 CBS

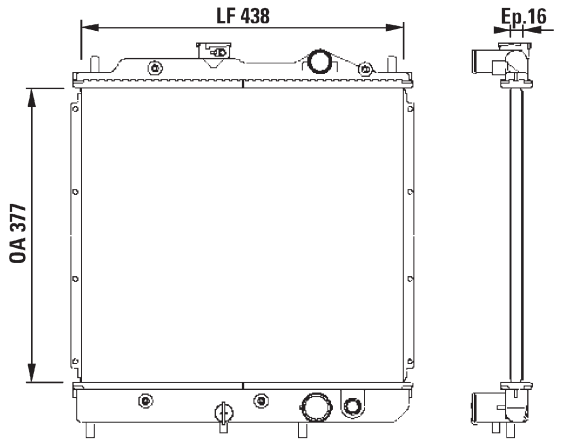


| | | |
|---|---|---|
| MITSUBISHI MB660364 | 377x438x16 | 29mm L |
| | - | 36mm L |

## 731649 CBS

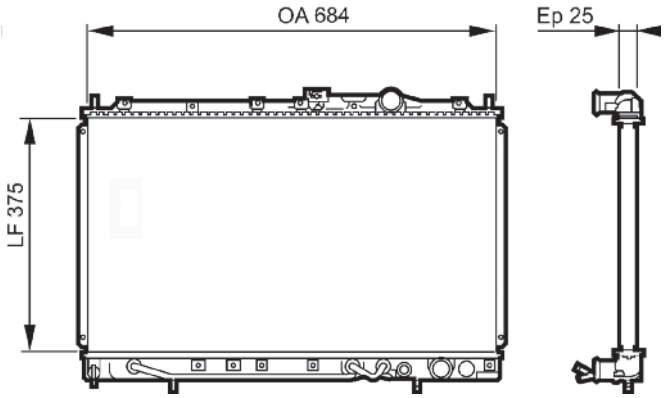


| | | |
|---|---|---|
| MITSUBISHI MB890506 | 375x684x25 | 35mm L |
| | + | 35mm L |

## 731647 CBS

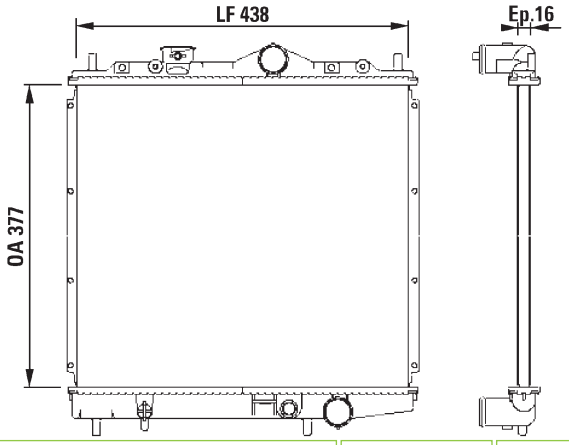


| | | |
|---|---|---|
| MITSUBISHI MB660558 | 377x438x16 | 35mm L |
| | - | 35mm L |

## 731654 CBS

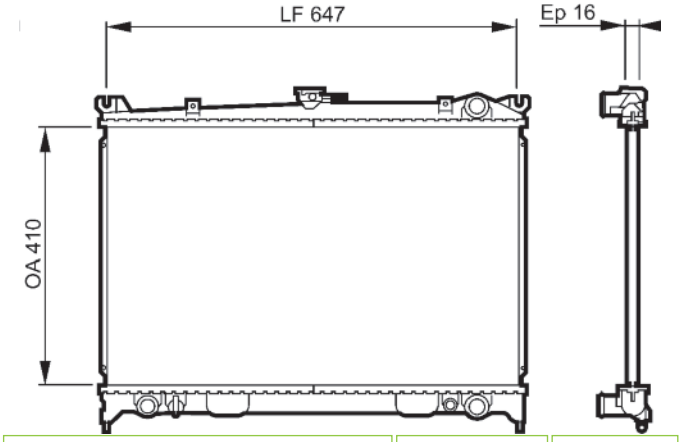


| | | |
|---|---|---|
| NISSAN 2141055S00 | 410x647x16 | 35mm L |
| | - | 35mm L |

## 731648 ALB

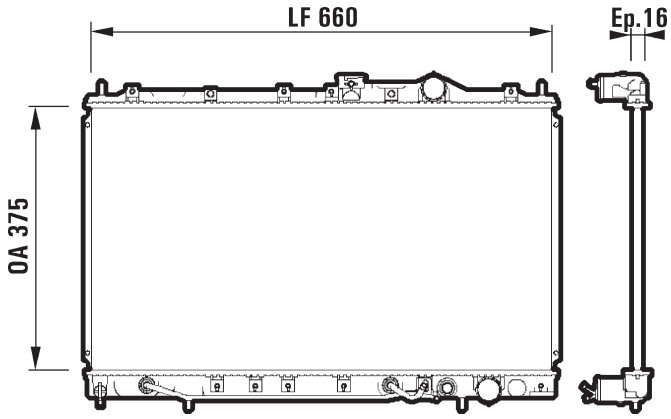


| | | |
|---|---|---|
| MITSUBISHI MB660561 | 375x660x16 | 35mm L |
| | + | 35mm L |

## 731656 ALB

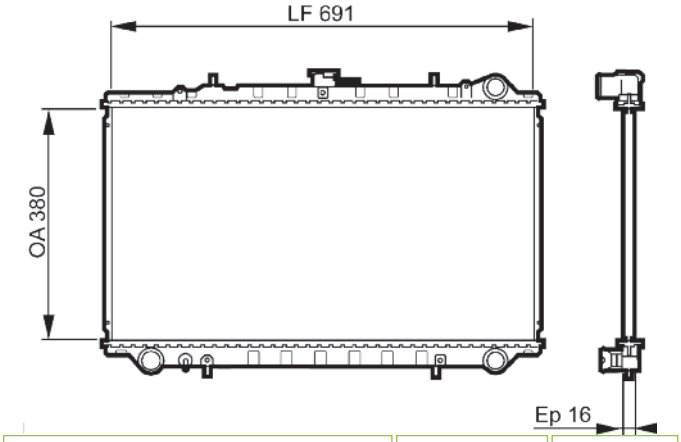


| | | |
|---|---|---|
| NISSAN 2141051E00 | 380x691x16 | 35mm L |
| | - | 35mm L |

## 731657 ALB

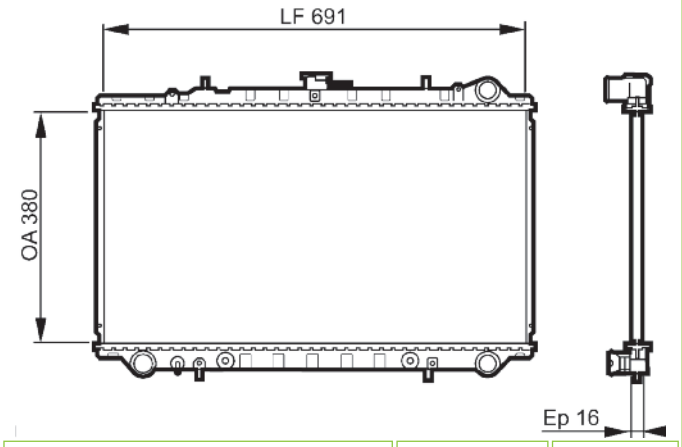


| | | |
|---|---|---|
| NISSAN 2146044R01 | 380x691x16 | 35mm L |
| | + | 35mm L |

## 731662 ALB

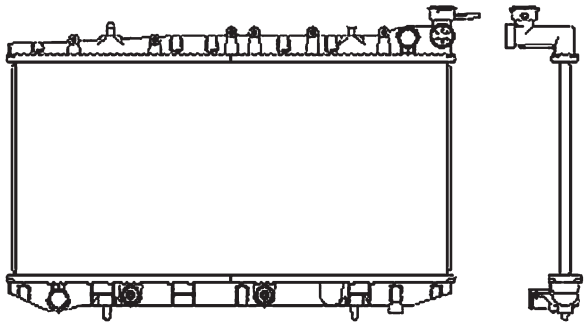

| | | |
|---|---|---|
| NISSAN 2146065Y02 | 320x647x16 | 28mm L |
| | + | 28mm L |

## 731659 ALB

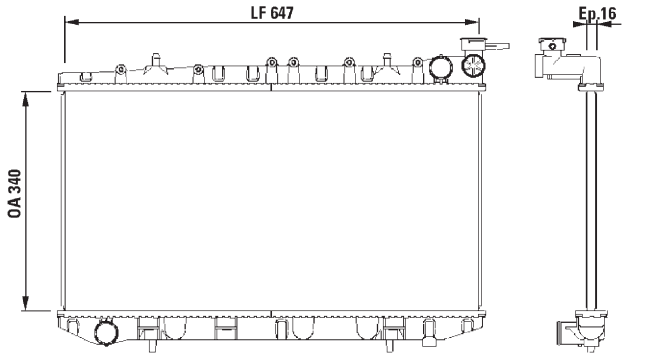


| | | |
|---|---|---|
| NISSAN 2141053J00 | 340x647x16 | 35mm L |
| | - | 35mm L |

## 731664 ALB

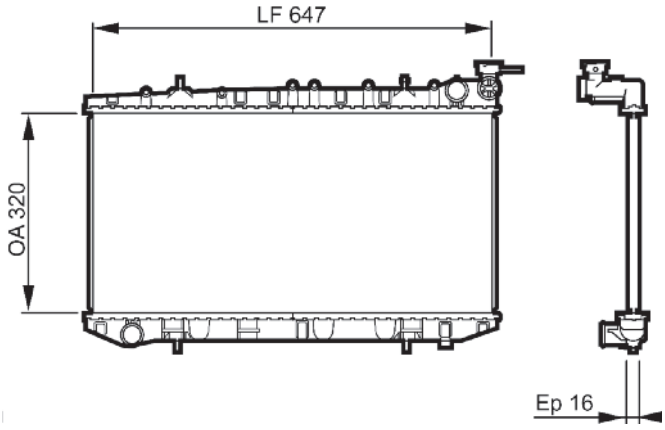


| | | |
|---|---|---|
| NISSAN 2141062C01 | 320x647x16 | 35mm L |
| | - | 35mm L |

## 731661 CBS

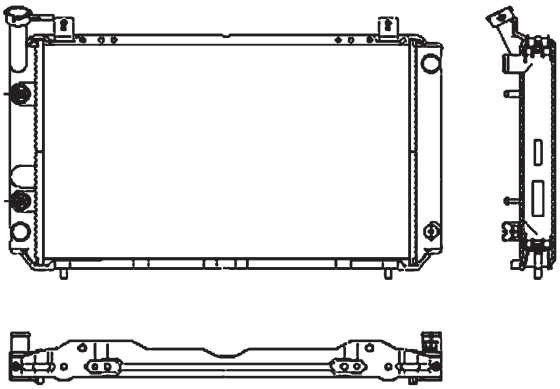

| | | |
|---|---|---|
| NISSAN 2146083A00 | 590x349x32 | 28mm L |
| | + | 28mm L |

## 731665 ALB

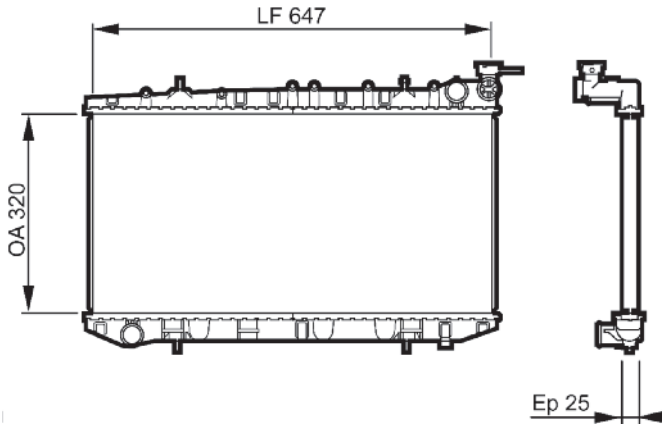


| | | |
|---|---|---|
| NISSAN 2141057Y02 | 320x647x25 | |
| | + | 35mm L |

## 731670 ALB

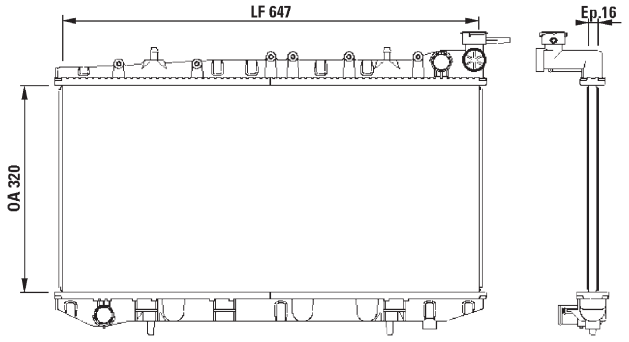


| | | |
|---|---|---|
| NISSAN 2141062Y02 | 320x647x16 | 28mm L |
| | - | 28mm L |

## 731677 ALB

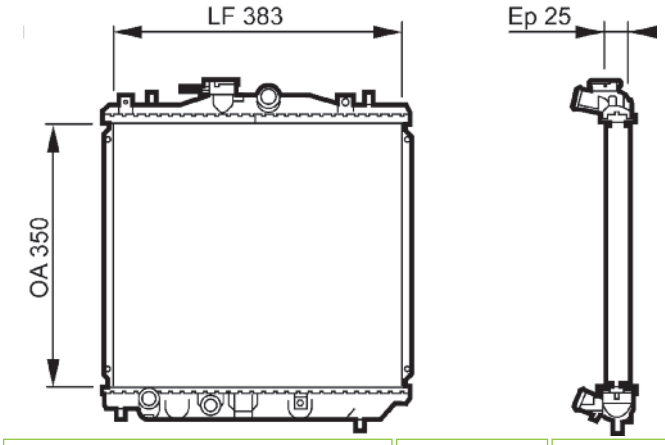


| | | |
|---|---|---|
| SUBARU 45199KA261 | 350x383x25 | 25mm L |
| | - | 25mm L |

## 731674 ALB

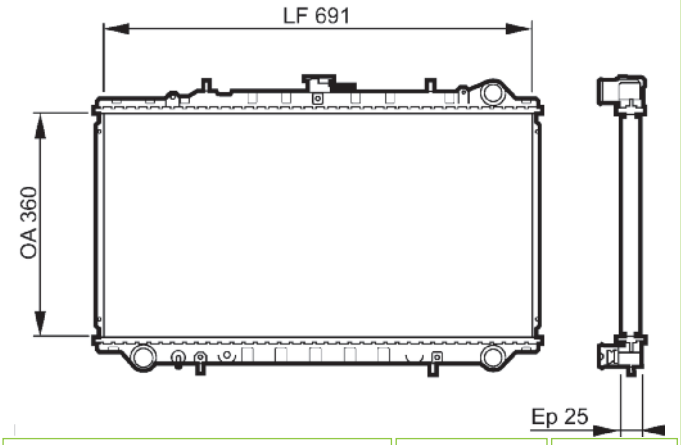


| | | |
|---|---|---|
| NISSAN 2141074N00 | 360x691x25 | 35mm L |
| | - | 35mm L |

## 731678 ALB

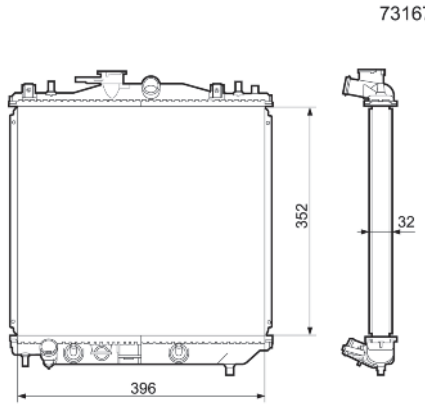


| | | |
|---|---|---|
| SUBARU 45199KA271 | 352x396x32 | 25mm L |
| | + | 25mm L |

## 731675 ALB

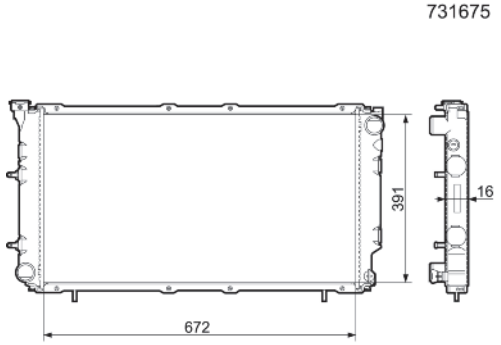


| | | |
|---|---|---|
| SUBARU 45199AA090 | 672x391x16 | 38mm L |
| | + | 38mm L |

## 731682 ALB

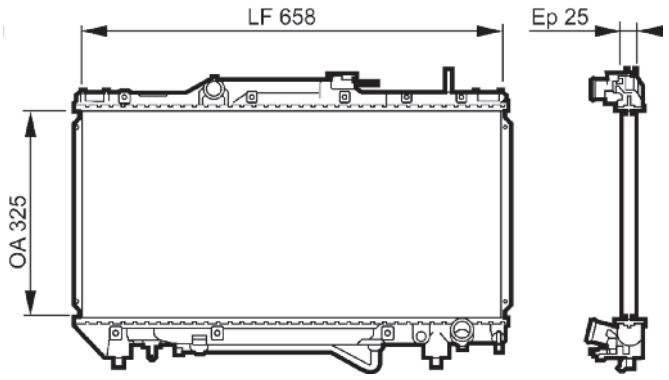


| | | |
|---|---|---|
| TOYOTA 1640074810 | 325x658x25 | 31mm L |
| | + | 31mm L |

## 731684 ALB

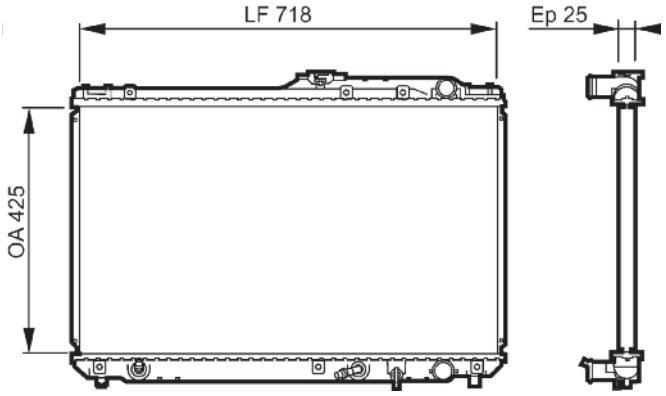


| | | |
|---|---|---|
| TOYOTA 1640062100 | 425x718x25 | 34mm L |
| | + | 34mm L |

## 731694 ALB

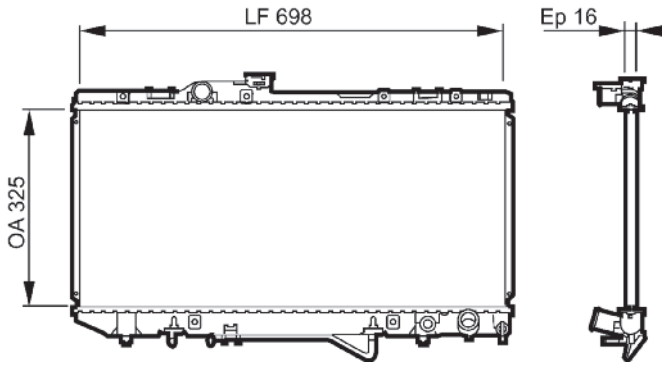


| | | |
|---|---|---|
| TOYOTA 1640074550 | 325x698x16 | 31mm L |
| | + | 31mm L |

## 731685 ALB

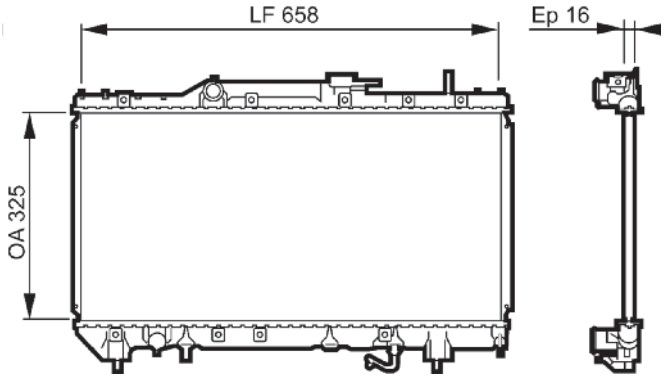


| | | |
|---|---|---|
| TOYOTA 1640016481 | 325x658x16 | 31mm L |
| | + | 31mm L |

## 731696 ALB

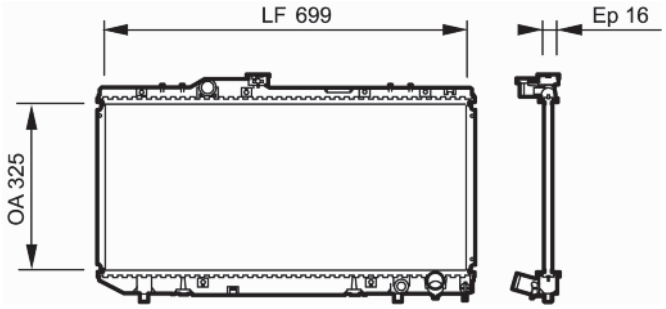


| | | |
|---|---|---|
| TOYOTA 1640074540 | 325x699x16 | 31mm L |
| | - | 31mm L |

## 731688 CBS

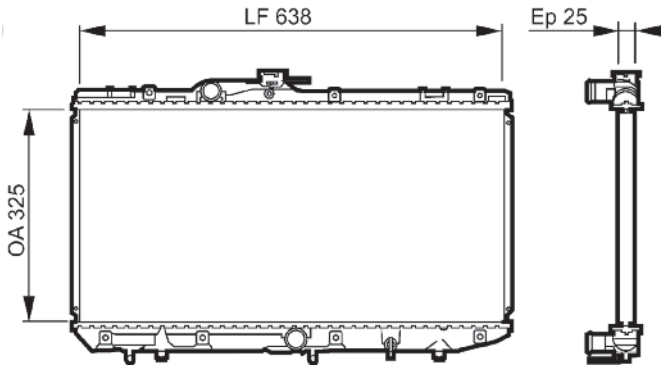


| | | |
|---|---|---|
| TOYOTA 164001B020 | 325x638x25 | 28mm L |
| | + | 28mm L |

## 731698 ALB

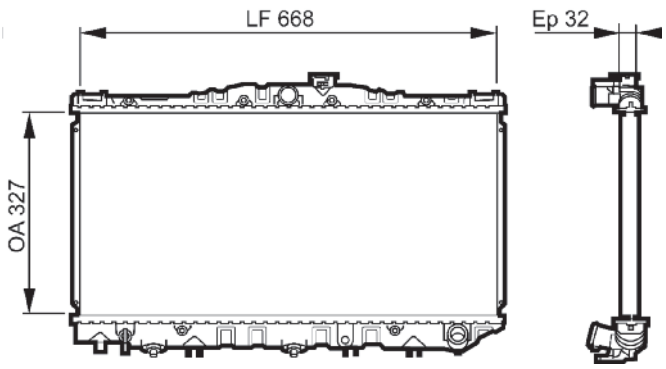


| | | |
|---|---|---|
| TOYOTA 1640064160 | 327x668x32 | 31mm L |
| | + | 31mm L |

## 731713 ALB

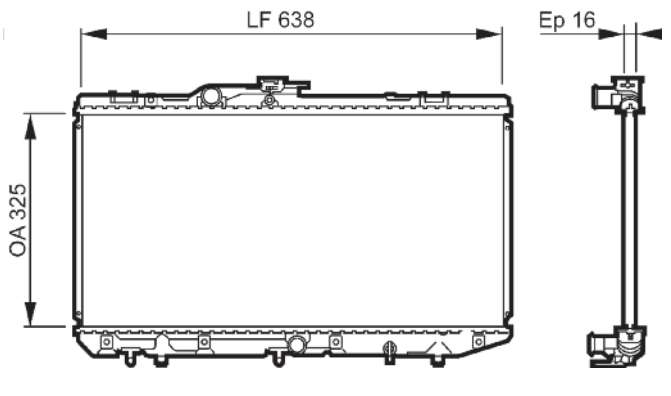


| | | |
|---|---|---|
| TOYOTA 1640011340 | 325x638x16 | 28mm L |
| + | | 28mm L |

## 731716 CBS

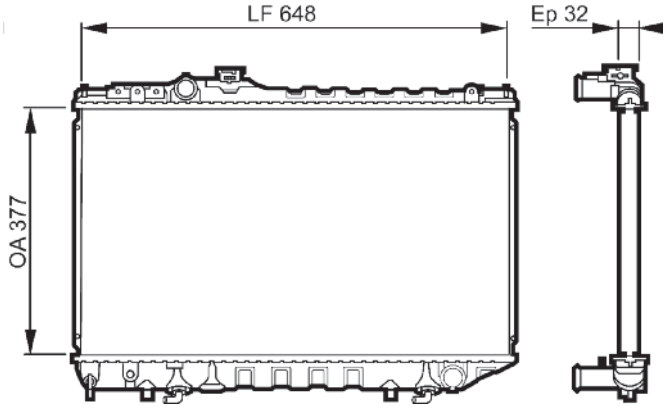


| | | |
|---|---|---|
| TOYOTA 1640042130 | 377x648x32 | 34mm L |
| - | | 34mm L |

## 731714 ALB

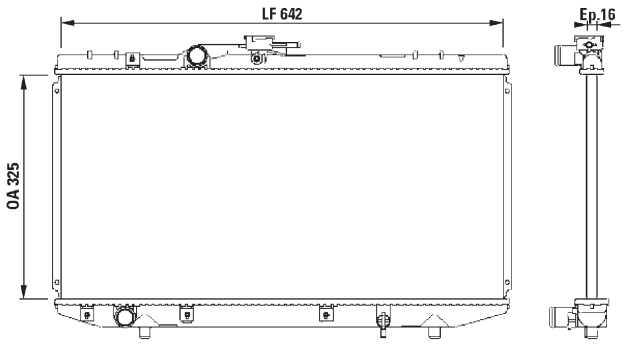


| | | |
|---|---|---|
| TOYOTA 1640011320 | 325x642x16 | 28mm L |
| - | | 28mm L |

## 731717 CBS

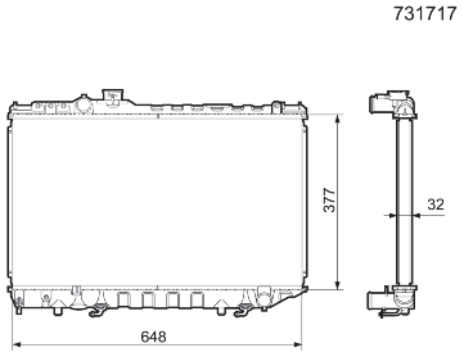


| | | |
|---|---|---|
| TOYOTA 1640042121 | 377x648x32 | 34mm L |
| + | | 34mm L |

## 731715 CBS

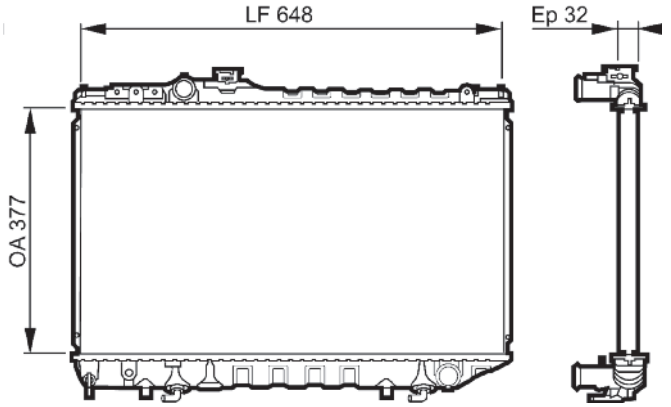


| | | |
|---|---|---|
| TOYOTA 1640042141 | 377x648x32 | 34mm L |
| + | | 34mm L |

## 731725 ALB

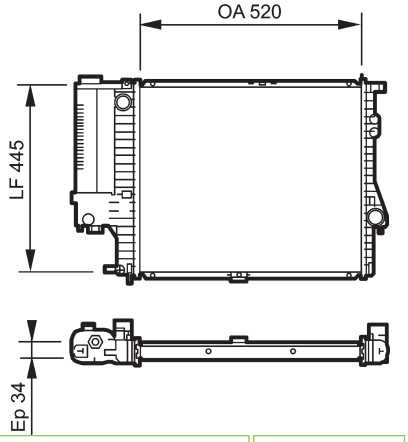


| | | |
|---|---|---|
| BMW 17111740698 | 520x445x34 | 41mm |
| - | | 41mm |

## 731728 RM1135 ALM

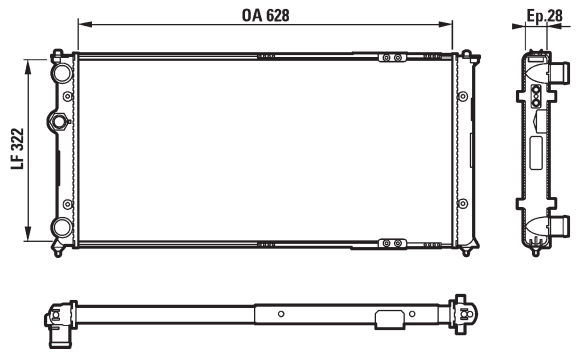


| | | | |
|---|---|---|---|
| SEAT 6K0121253AC<br>VOLKSWAGEN 6K0121253AC | 628x322x28 | 31mm L | |
| | | 31mm L | |

## 731736 RM1170 ALM

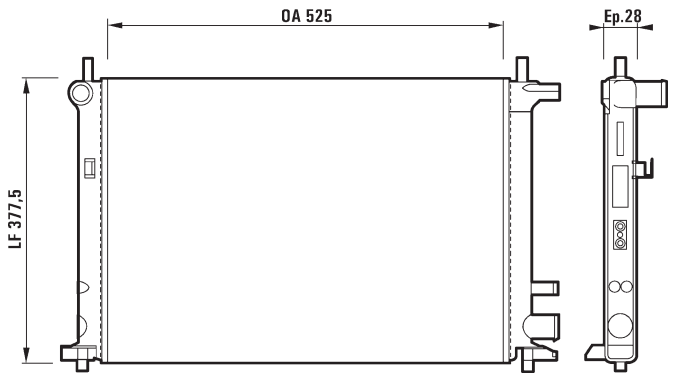


| | | | |
|---|---|---|---|
| FORD 1001859<br>MAZDA 1E0515200A | 525x377,5x28 | 33mm L | |
| | | 33mm L | |

## 731734 6TA089A ALM

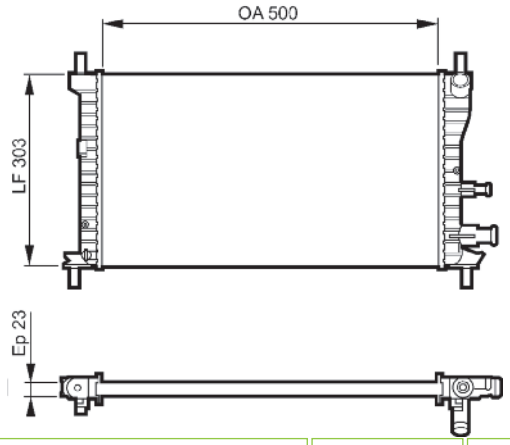


| | | | |
|---|---|---|---|
| FORD 1001855<br>MAZDA 1E0415200 | 500x303x23 | 27mm L | |
| | | 27mm L | |

## 731738 ALB

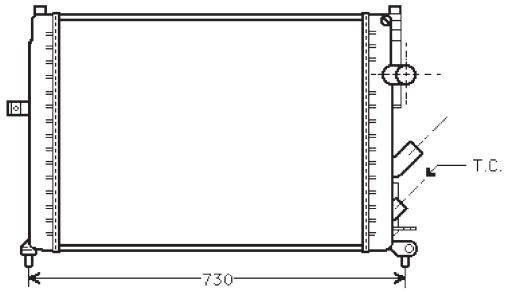


| | | | |
|---|---|---|---|
| RENAULT 7700876213 | 634x438x42 | L | |
| | | L | |

## 731735 RM1168 ALM

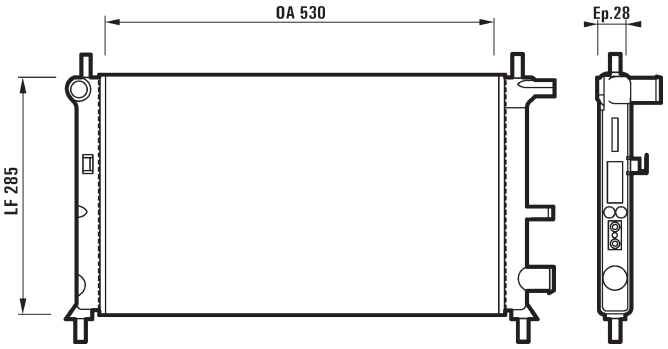


| | | | |
|---|---|---|---|
| FORD 1001857<br>MAZDA 1E1015200B | 530x285x28 | 33mm L | |
| | | 33mm L | |

## 731741 CBS

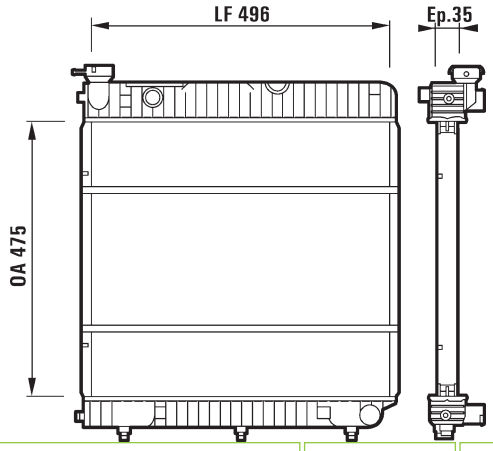


| | | | |
|---|---|---|---|
| MERCEDES 6015007803 | 475x496x35 | L | |
| | | L | |

## 731743 RM1734 ALM

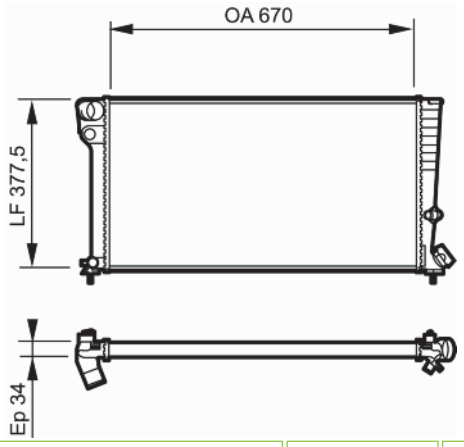


| | | | |
|---|---|---|---|
| CITROEN 133024<br>PEUGEOT 1331Q7 | 670x377,5x34 | 40mm L | |
| | - | 40mm QC | |

## 731744 RM1118 ALM

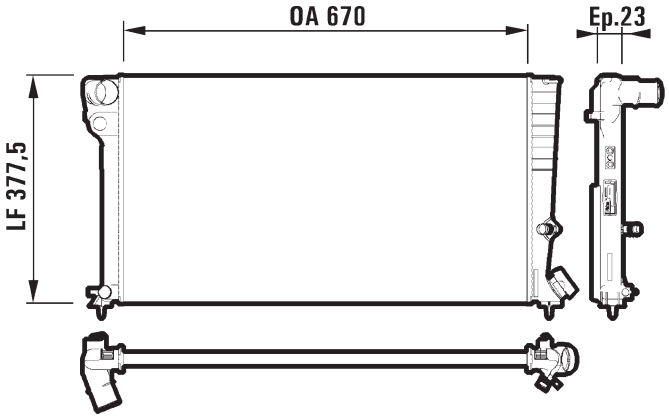


| | | | |
|---|---|---|---|
| CITROEN 133023<br>PEUGEOT 133023 | 670x377x23 | 40mm L | |
| | - | 40mm QC | |

## 731749 ALB

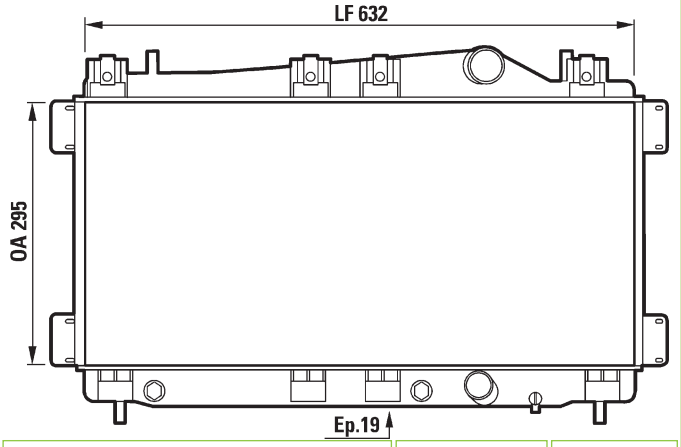


| | | | |
|---|---|---|---|
| CHRYSLER 4546902 | 295x632x19 | 32mm L | |
| | - | 32mm L | |

## 731755 ALM

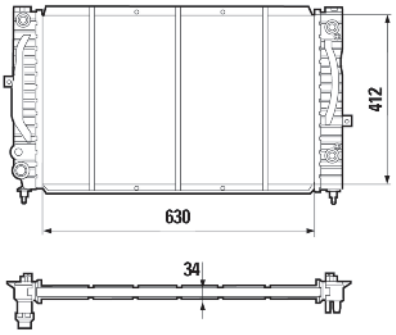


| | | | |
|---|---|---|---|
| AUDI 8D0121251M<br>SKODA 8D0121251BC<br>VOLKSWAGEN 8D0121251M | 630x412,3x34 | 32mm QC | |
| | + | 32mm QC | |

## 731756 ALM

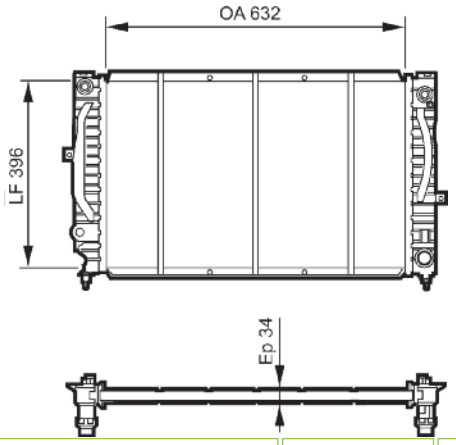


| | | | |
|---|---|---|---|
| AUDI 8D0121251N<br>SKODA 8D0121251N<br>VOLKSWAGEN 8D0121251N | 632x396x34 | 32mm QC | |
| | - | 32mm QC | |

## 731757 ALM

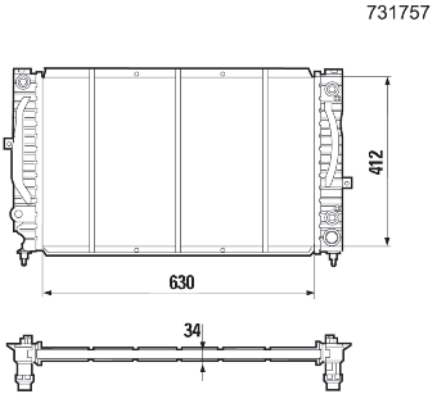


| | | | |
|---|---|---|---|
| AUDI 8D0121251L<br>SKODA 8D0121251BB<br>VOLKSWAGEN 8D0121251L | 630x412x34 | 32mm QC | |
| | + | 32mm QC | |

## 731760 ALB

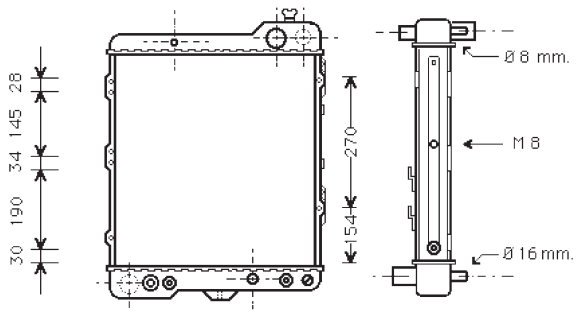


| | | |
|---|---|---|
| AUDI 893121251N | 475x375x40 | 32mm L |
| + | | 32mm L |

## 731782 CBS

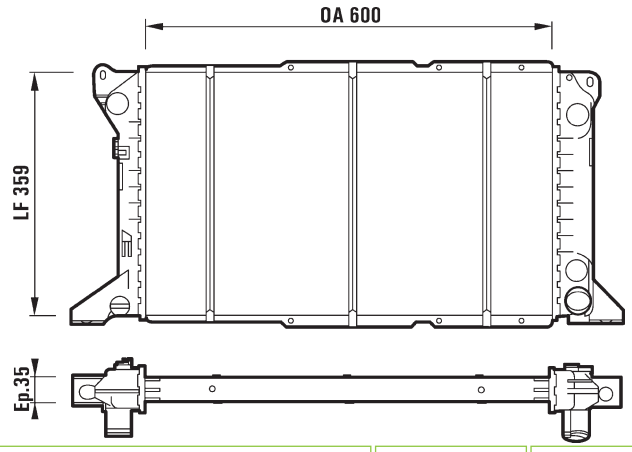


| | | |
|---|---|---|
| FORD 7242485 | 600x359x35 | L |
| - | | L |

## 731766 ALB

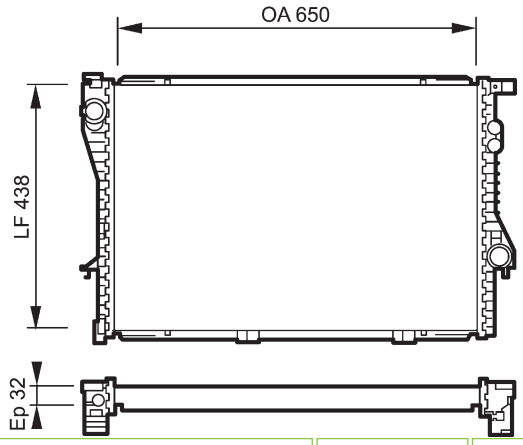


| | | |
|---|---|---|
| BMW 17112246012 | 650x438x32 | 40mm L |
| - | | 40mm L |

## 731785 ALB

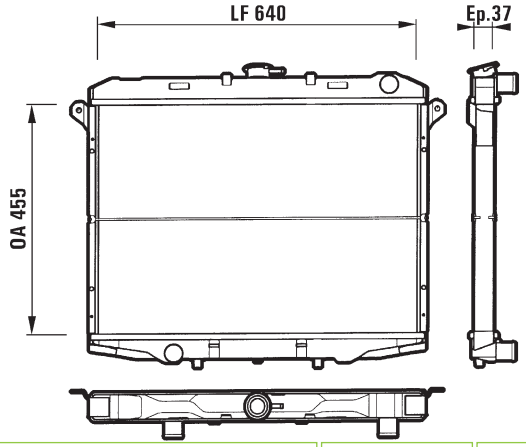


| | | |
|---|---|---|
| FORD 1958982<br>NISSAN 214107F000 | 500x655x27 | 35mm L |
| - | | 35mm L |

## 731779 CBS

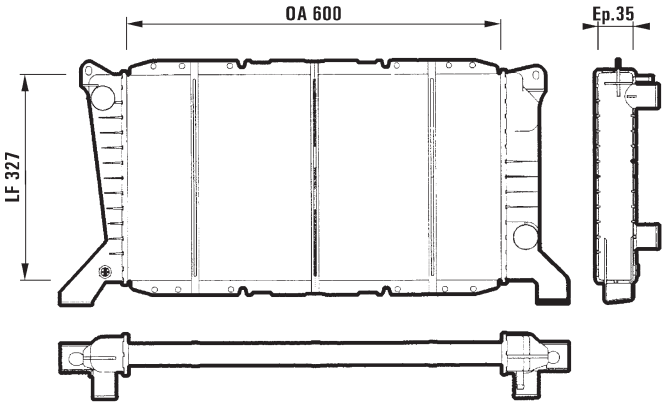


| | | |
|---|---|---|
| FORD 7242486 | 600x327x35 | 38mm L |
| - | | 38mm L |

## 731786 ALB

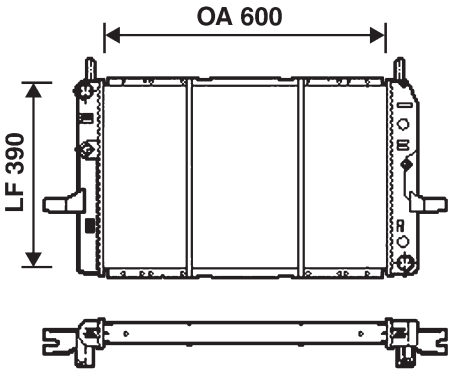


| | | |
|---|---|---|
| FORD 1659344 | 600x390x42 | |
| - | | |

## 731804 ALM

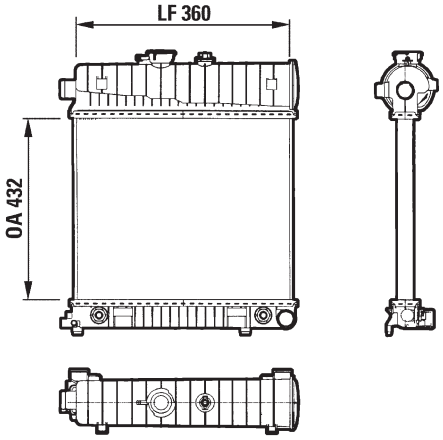


| | | |
|---|---|---|
| MERCEDES 2025006103 | 360x432x33 | L |
| | + | L |

## 731811 CBS

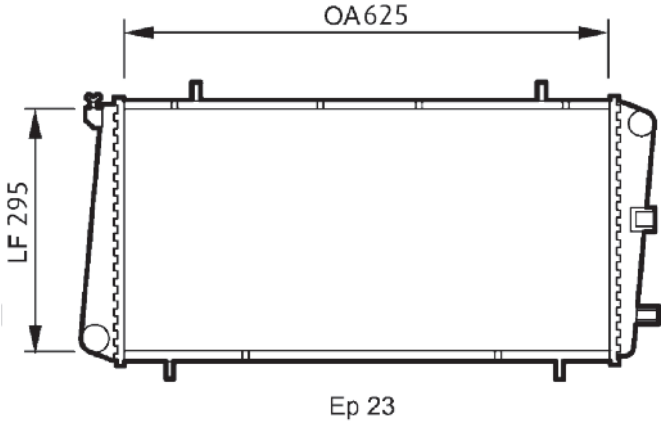


| | | |
|---|---|---|
| MG PCC105740 | 625x295x23 | 32mm L |
| | - | 32mm L |

## 731805 ALB

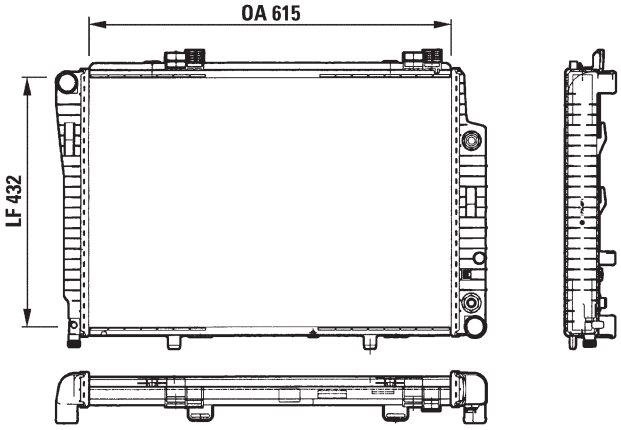


| | | |
|---|---|---|
| MERCEDES 2025002203 | 615x432x42 | 36mm L |
| | + | 36mm L |

## 731815 RM1340 ALM

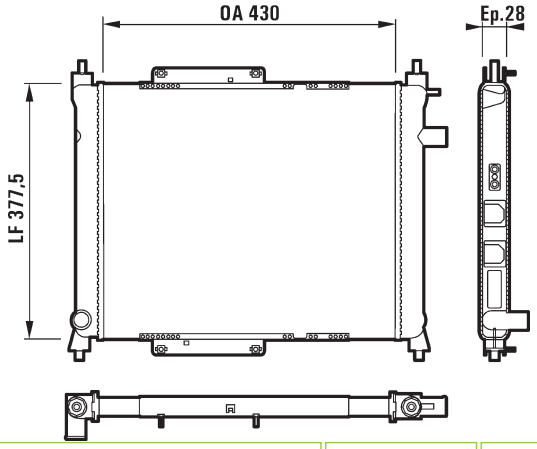


| | | |
|---|---|---|
| MG PCC001480<br>ROVER GRD938 | 430x377,5x28 | 28mm L |
| | - | 28mm L |

## 731808 ALB

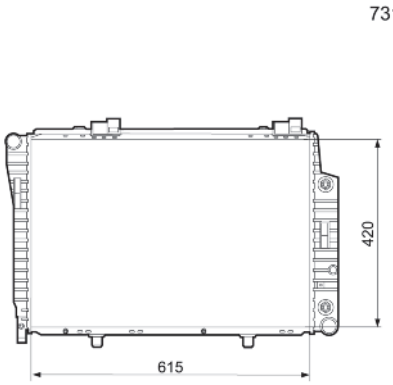


| | | |
|---|---|---|
| MERCEDES 2025003203 | 615x422x42 | 36mm L |
| | + | 36mm L |

## 731816 RM1342 ALM

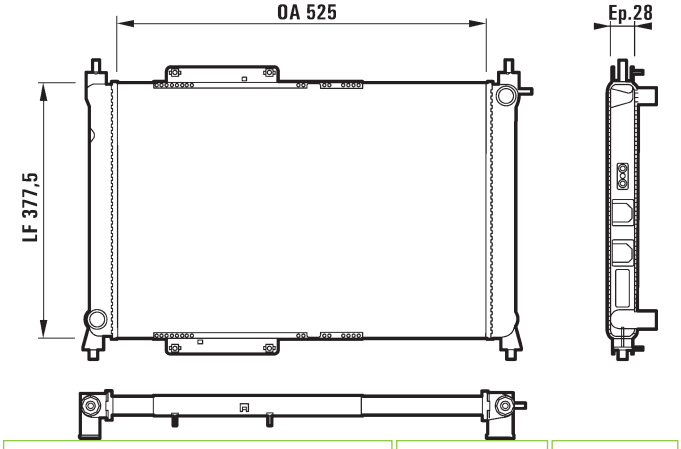


| | | |
|---|---|---|
| ROVER PCC104670 | 525x377,5x28 | 28mm L |
| | - | 28mm L |

## 731817 CBS

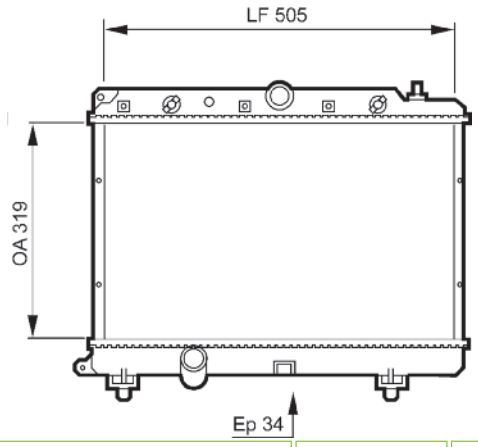


| | | |
|---|---|---|
| ROVER PCC104680 | 319x505x34 | 32mm L |
| - | | 32mm L |

## 731828 CBS

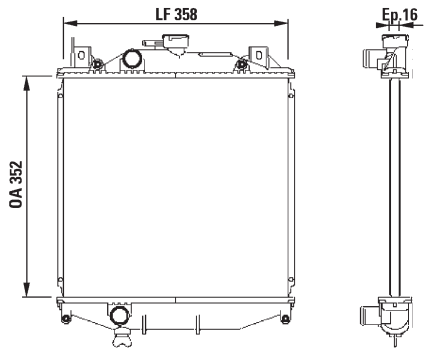


| | | |
|---|---|---|
| SUZUKI 1770060B22 | 352x358x16 | 28mm L |
| - | | 28mm L |

## 731818 RM1341 ALM

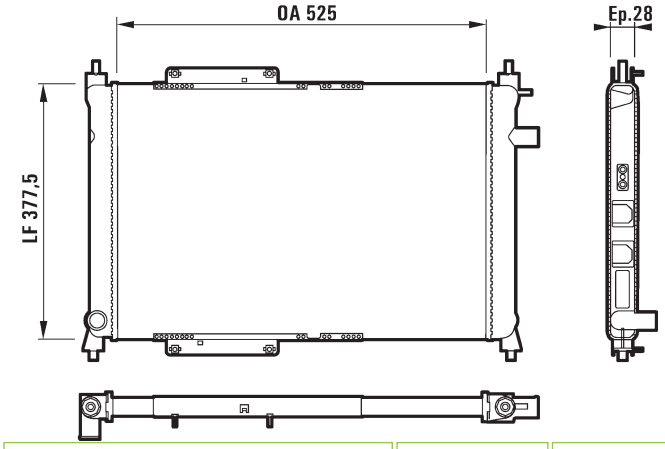


| | | |
|---|---|---|
| MG PCC107410<br>ROVER GRD1074 | 525x377,5x28 | 28mm L |
| - | | 28mm L |

## 731830 ALB

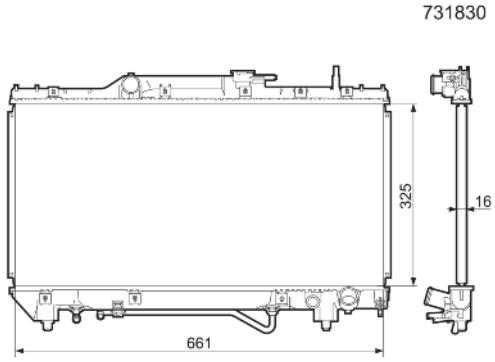


| | | |
|---|---|---|
| TOYOTA 1640074790 | 325x661x16 | 31mm L |
| + | | 31mm L |

## 731820 CBS

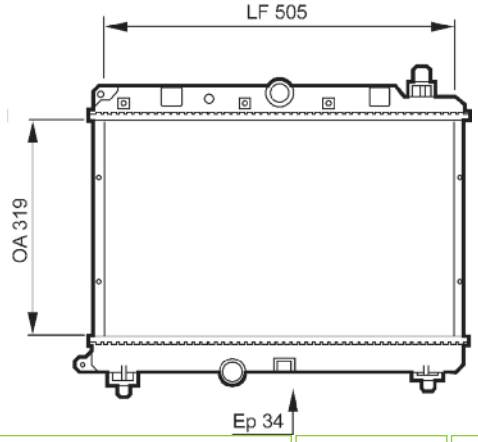


| | | |
|---|---|---|
| ROVER GRD932 | 319x505x34 | 32mm L |
| - | | 32mm L |

## 731831 ALB

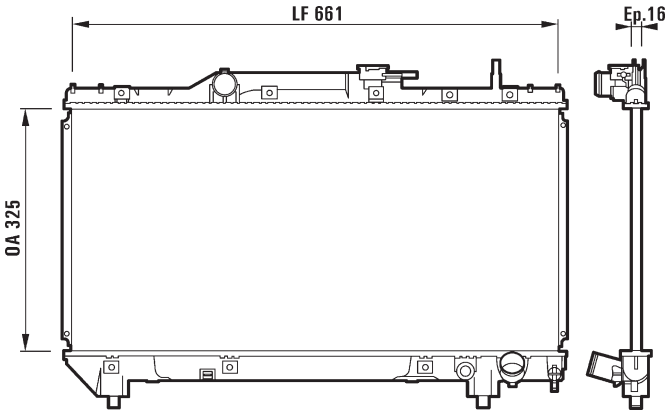


| | | |
|---|---|---|
| TOYOTA 1640074840 | 325x661x16 | 31mm L |
| - | | 31mm L |

## 731833 CBS

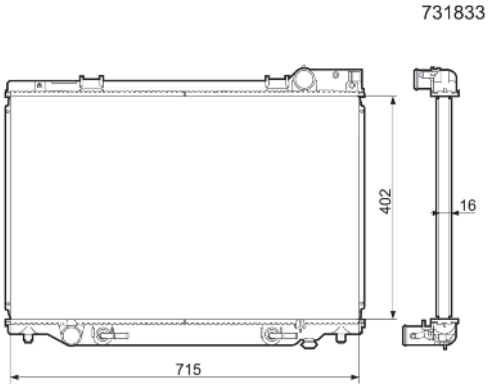


| | | |
|---|---|---|
| TOYOTA 1640076062 | 402x715x16 | 38mm L |
| | + | 38mm L |

## 731840 CBS

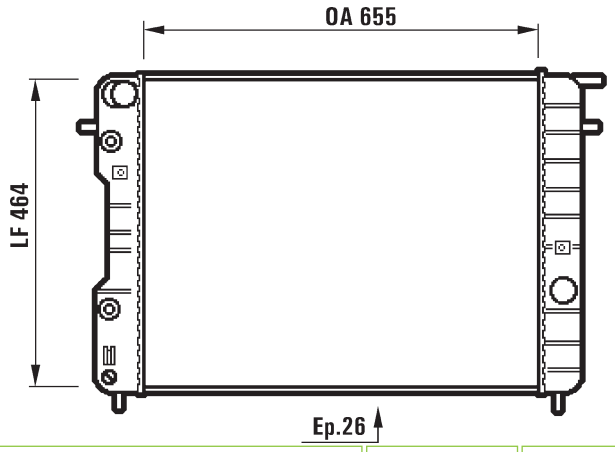


| | | |
|---|---|---|
| OPEL 6302007<br>VAUXHALL 52463046 | 655x464x26 | 34mm L |
| | + | 34mm L |

## 731837 ALB

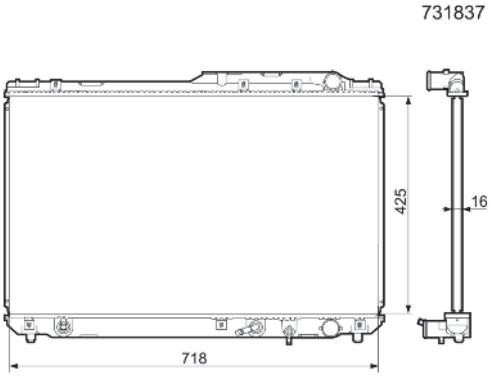


| | | |
|---|---|---|
| TOYOTA 1640062150 | 425x718x16 | |
| | + | 34mm L |

## 731843 ALB

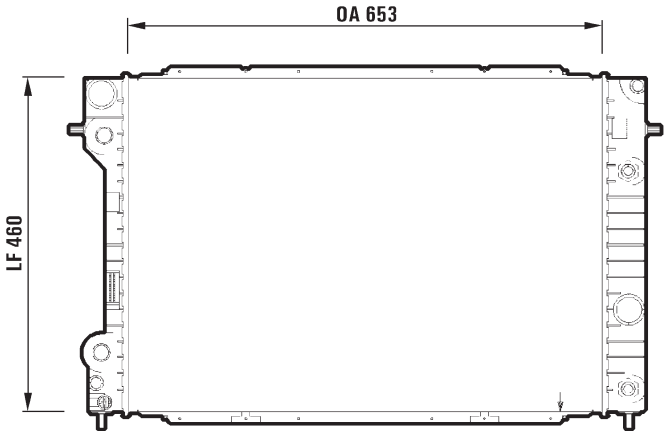


| | | |
|---|---|---|
| OPEL 6302004<br>VAUXHALL 52463054 | 653x460 | 40mm L |
| | + | 40mm L |

## 731839 ALB

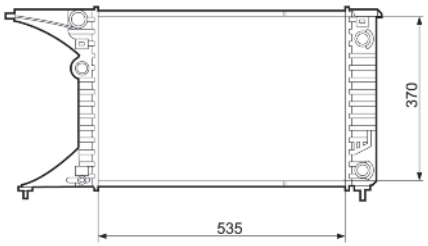


| | | |
|---|---|---|
| OPEL 52463043<br>VAUXHALL 52463044 | 535x370x28 | 34mm L |
| | + | 34mm L |

## 731846 RA1485 ALB

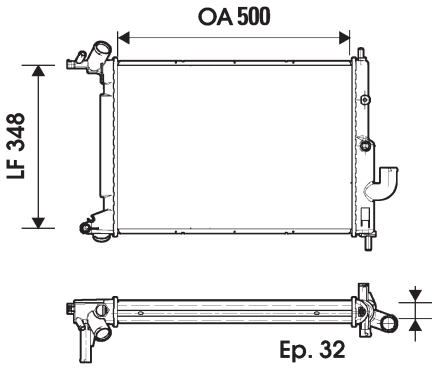


| | | |
|---|---|---|
| OPEL 1300184<br>VAUXHALL 52488365 | 500x348x32 | 34mm L |
| | - | 34mm L |

## 731847 RM1352 ALM

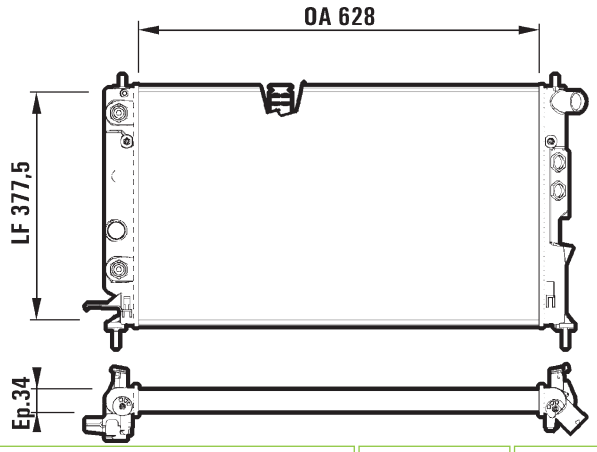


| | | | |
|---|---|---|---|
| OPEL | 1300182 | 628x377,5x34 | 34mm L |
| | | + | 34mm L |

## 731866 CBS

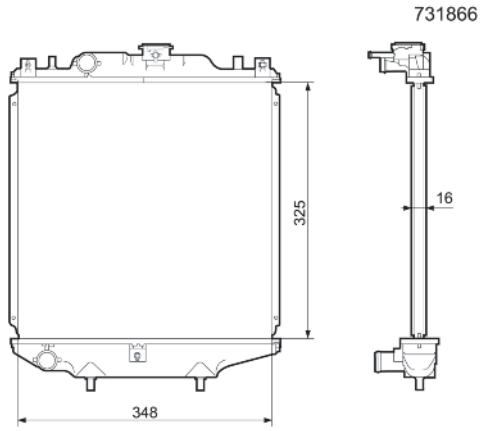


| | | | |
|---|---|---|---|
| SUZUKI | 17700M72F20 | 325x348x16 | 25mm L |
| | | - | 25mm L |

## 731856 CBS

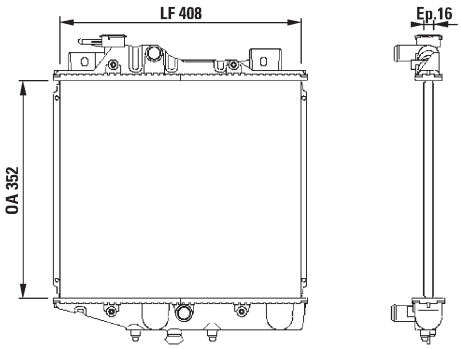


| | | | |
|---|---|---|---|
| DAIHATSU | 1640087770000 | 352x408x16 | 25mm L |
| | | - | 25mm L |

## 731910 RA1109 ALB

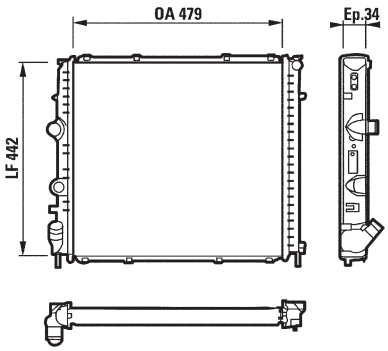


| | | | |
|---|---|---|---|
| RENAULT | 7701352898 | 479x442,2x34 | 32mm L |
| | | - | 32mm L |

## 731857 CBS

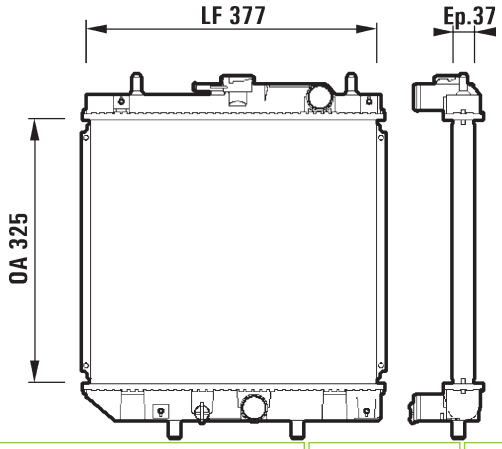


| | | | |
|---|---|---|---|
| DAIHATSU | 1640087F48000 | 325x377x37 | 32mm L |
| | | - | 32mm L |

## 731972 CBS

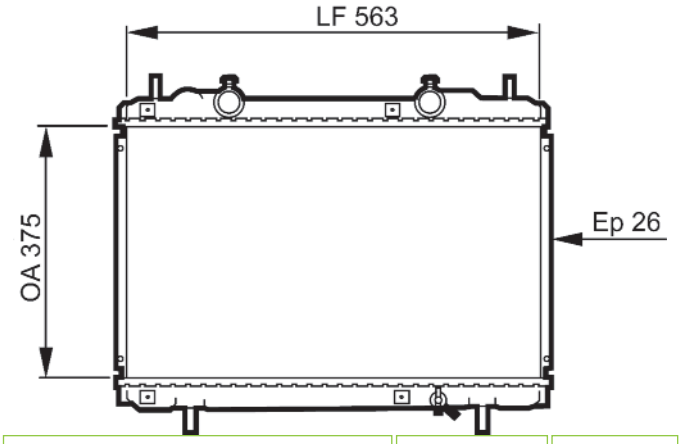


| | | | |
|---|---|---|---|
| FIAT | 46759742 | 375x563x26 | 35mm L |
| | | - | 35mm L |

## 731974 ALB

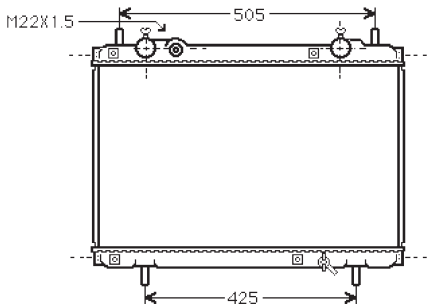


| | | |
|---|---|---|
| FIAT 71736178 | 375x563x42 | 35mm L |
| | | 35mm L |

## 731977 CBS

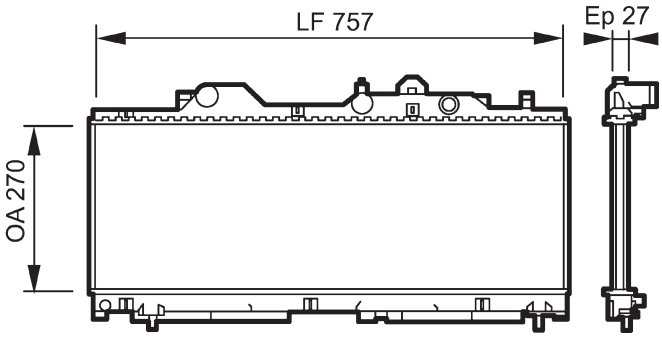


| | | |
|---|---|---|
| FIAT 46723249 | 270x757x27 | 35mm L |
| | | 35mm L |

## 731975 CBS

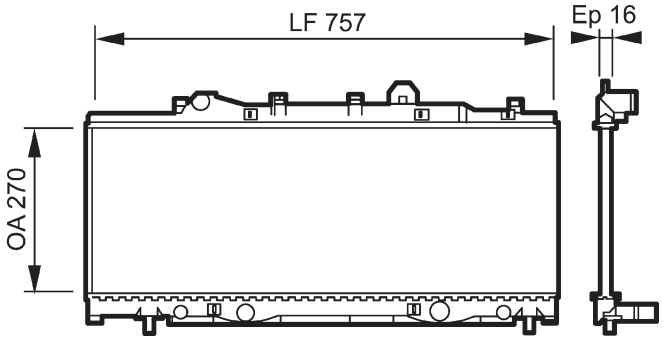


| | | |
|---|---|---|
| FIAT 7760959 | 270x757x16 | 35mm L |
| | | 35mm L |

## 731978 CBS

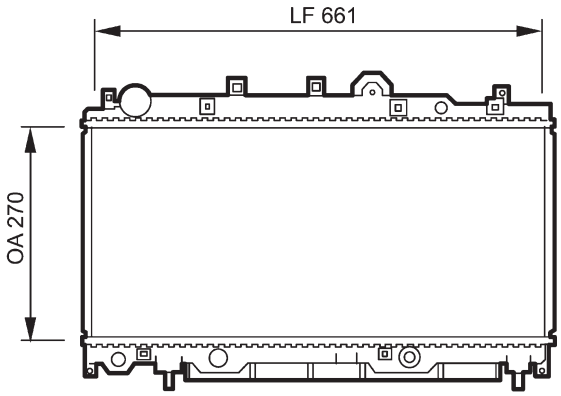


Ep 27

| | | |
|---|---|---|
| FIAT 7794871<br>LANCIA 7794871 | 270x661x27 | 28mm L |
| | | 28mm L |

## 731976 CBS

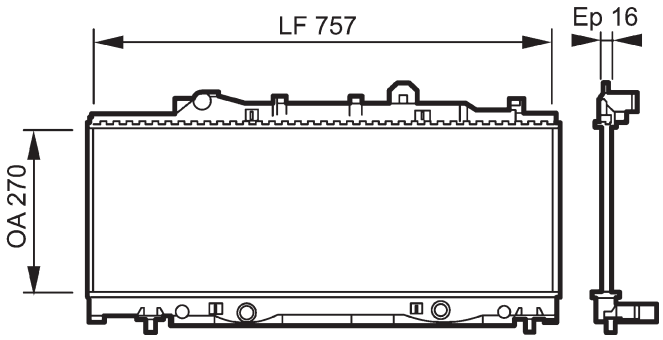


| | | |
|---|---|---|
| FIAT 7783504 | 270x757x16 | 35mm L |
| | | 35mm L |

## 731979 CBS

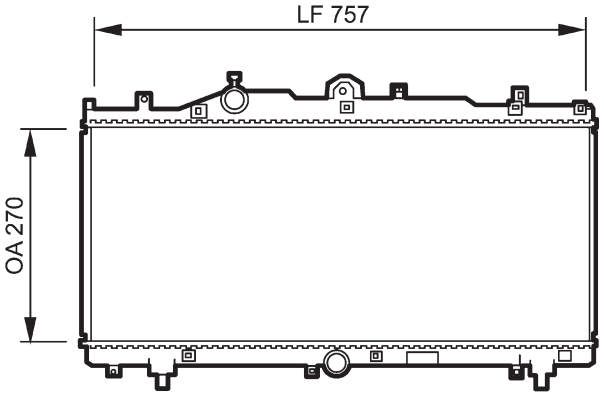


Ep 27

| | | |
|---|---|---|
| FIAT 46773321 | 270x757x27 | 35mm L |
| | | 35mm L |

## 731980 CBS

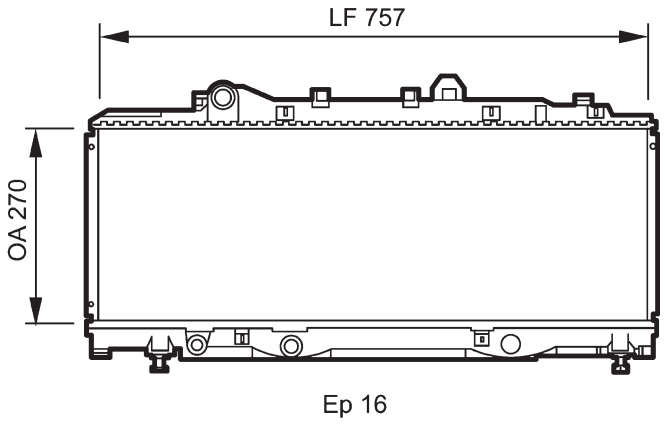


| | | |
|---|---|---|
| LANCIA 7785122 | 270x757x16 | 28mm L |
| | | 28mm L |

## 732003 RM1169 ALM

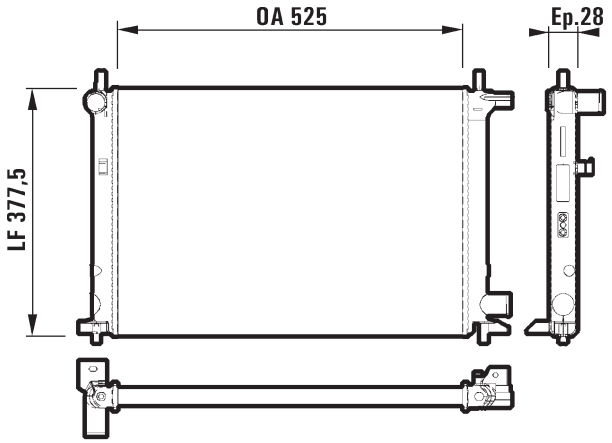


| | | |
|---|---|---|
| FORD 1042588<br>MAZDA 1E1615200A | 525x377,5x28 | 33mm L |
| | | 33mm L |

## 731981 RM1156 ALM

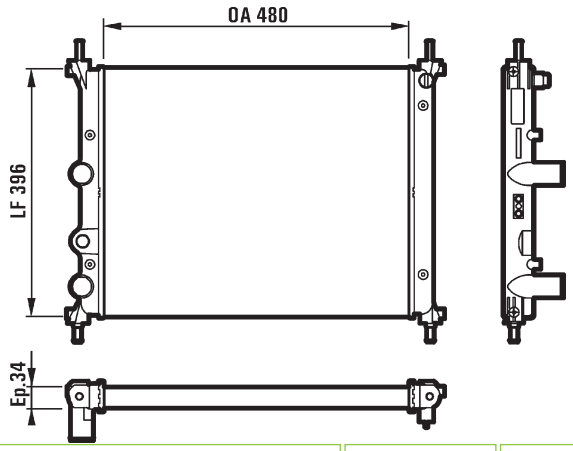


| | | |
|---|---|---|
| FIAT 46420484 | 480x396x34 | 35mm L |
| | | 35mm L |

## 732004 6TA075A ALM

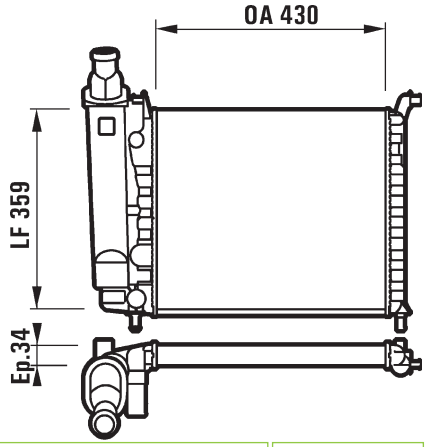


| | | |
|---|---|---|
| FIAT 46449096 | 430x359x34 | L |
| | | L |

## 731992 ALM

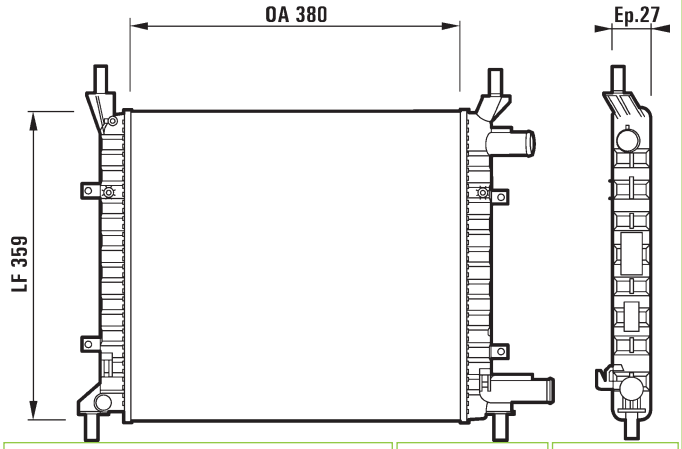


| | | |
|---|---|---|
| FORD 1056616 | 380x359x27 | 27mm L |
| | | 27mm L |

## 732005 6TA076A ALM

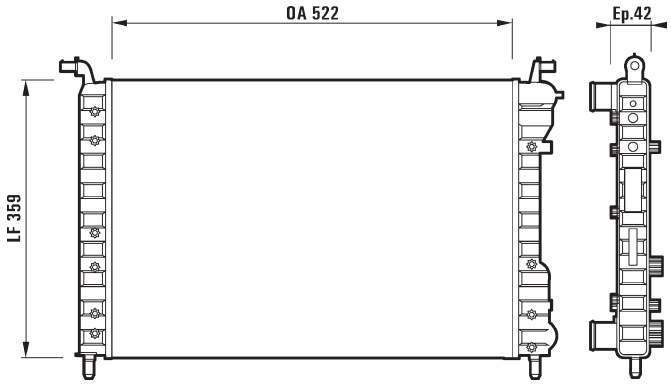


| | | |
|---|---|---|
| FIAT 46750718 | 522x359x42 | 35mm L |
| | | 35mm L |

## 732006 6TA077A ALM

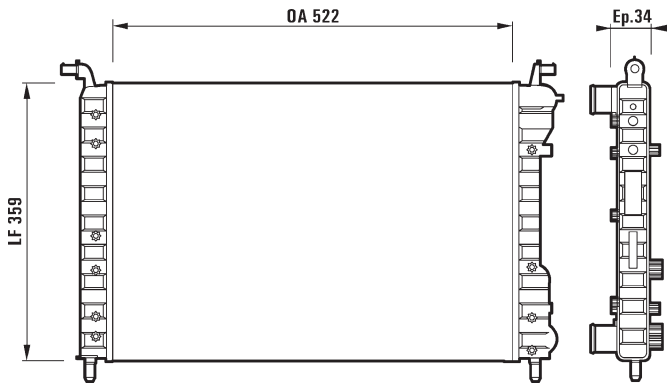


| | | |
|---|---|---|
| FIAT 46449104 | 522x359x34 | 35mm L |
| | | 35mm L |

## 732012 RM196 ALM

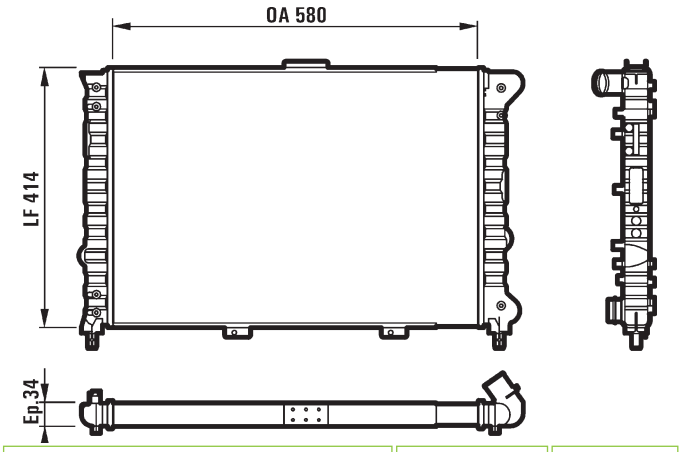


| | | |
|---|---|---|
| ALFA ROMEO 60663071 | 580x414,5x34 | 35mm L |
| | | 35mm QC |

## 732007 ALB

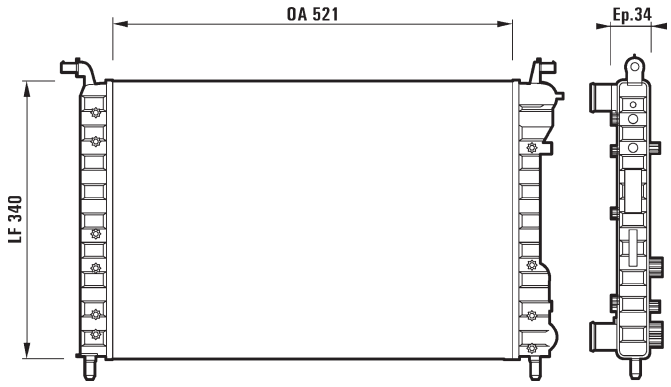


| | | |
|---|---|---|
| FIAT 46417050 | 521x340x34 | 35mm L |
| | | 35mm L |

## 732013 RA2004 ALB

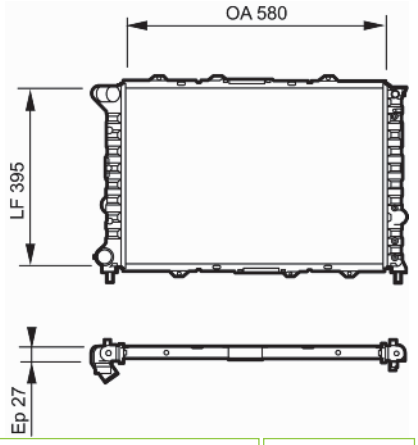


| | | |
|---|---|---|
| ALFA ROMEO 60690404 | 580x395x27 | 35mm L |
| | | 35mm QC |

## 732011 RM197 ALM

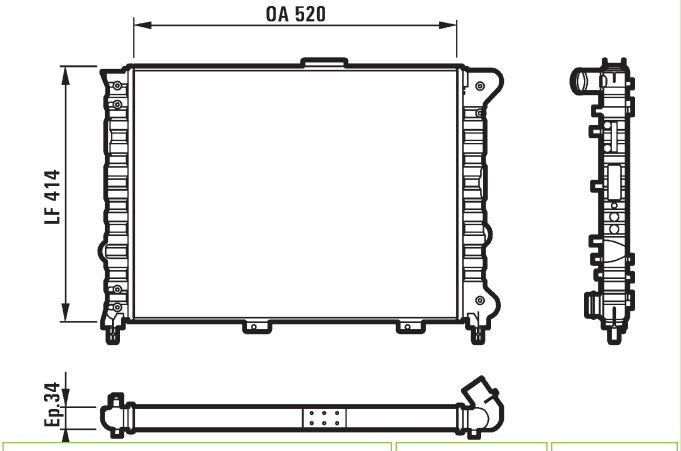


| | | |
|---|---|---|
| ALFA ROMEO 60663070 | 520x414,5x34 | 35mm L |
| | | 35mm L |

## 732032 ALB

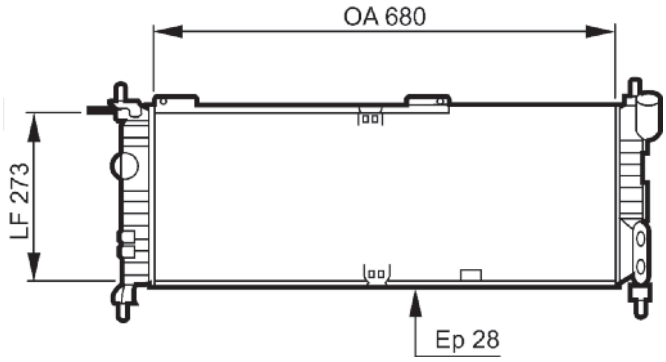


| | | |
|---|---|---|
| OPEL 1300152<br>VAUXHALL 52459323 | 680x273x28 | 34mm L |
| | | 34mm L |

## 732050 RAB052 CBS

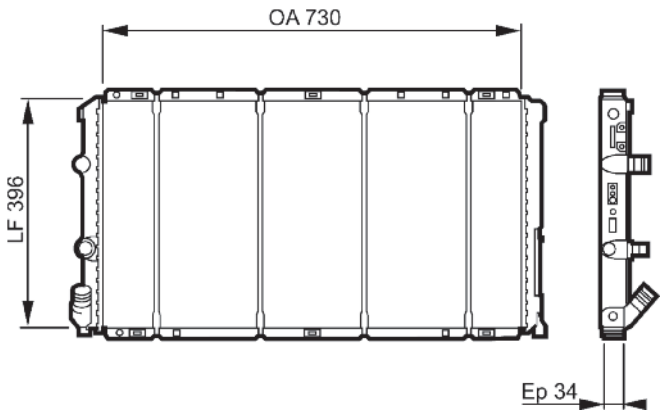


| | | |
|---|---|---|
| OPEL 4501137<br>RENAULT 7701046210<br>VAUXHALL 9161437 | 730x396x34 | 32mm L |
| | - | 32mm L |

## 732051 RM1125 ALM

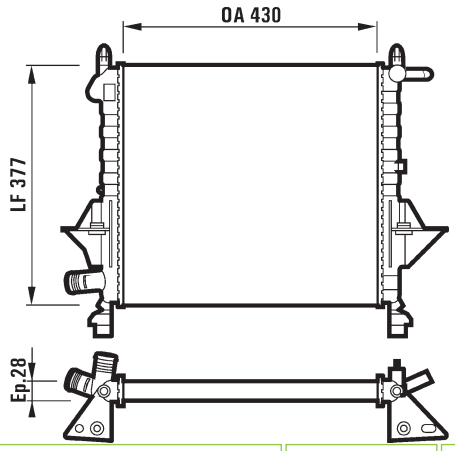


| | | |
|---|---|---|
| RENAULT 7701045212 | 430x377,5x28 | 32mm L |
| | - | 32mm L |

## 732063 RA1025 ALB

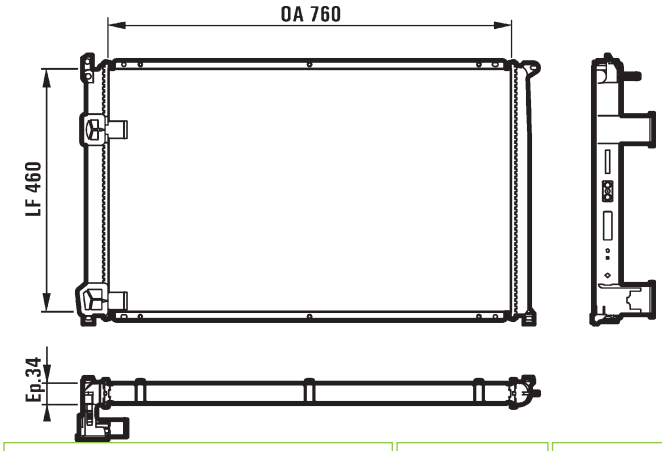


| | | |
|---|---|---|
| RENAULT RENARAR002 | 760x460x34 | |
| | - | |

## 732071 RA1508 ALB

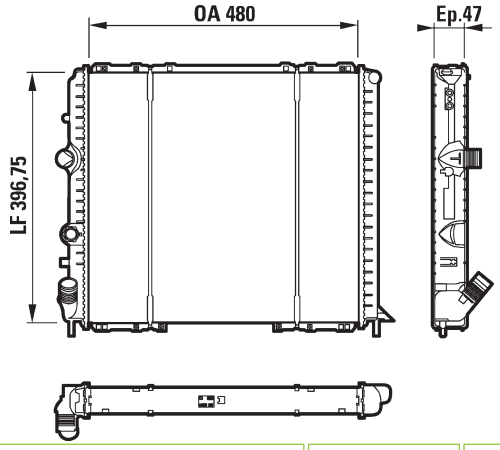


| | | |
|---|---|---|
| RENAULT 7700836304 | 480x396x34 | 32mm L |
| | - | 32mm L |

## 732072 RC1005 CBS

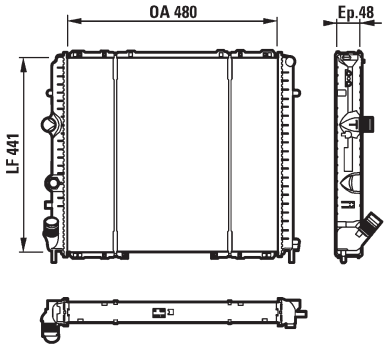


| | | |
|---|---|---|
| RENAULT 8200330848 | 480x441x47 | 32mm L |
| | - | 32mm L |

## 732090 ALB

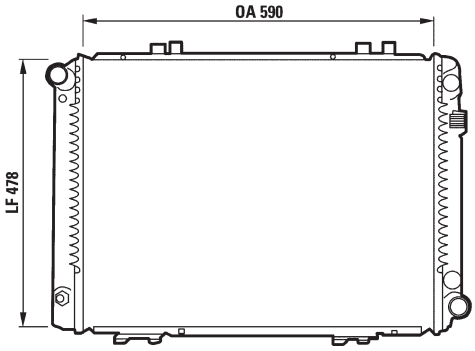


| | | |
|---|---|---|
| MERCEDES 2015009103 | 590x478x42 | 36mm L |
| | + | 36mm L |

## 732099 RAB031 ALB

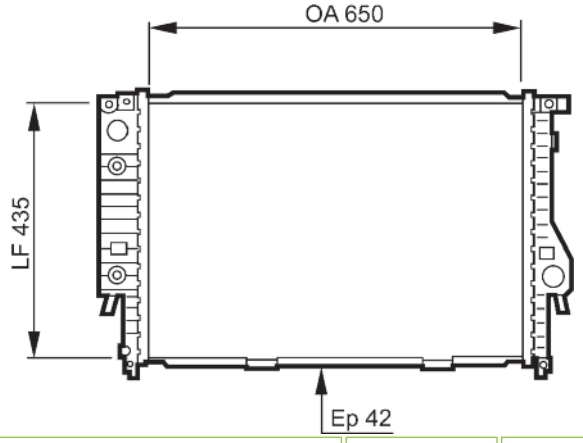


| | | |
|---|---|---|
| BMW 17111712267 | 650x435x42 | 40mm L |
| | + | 40mm L |

## 732123 RA1490 ALB

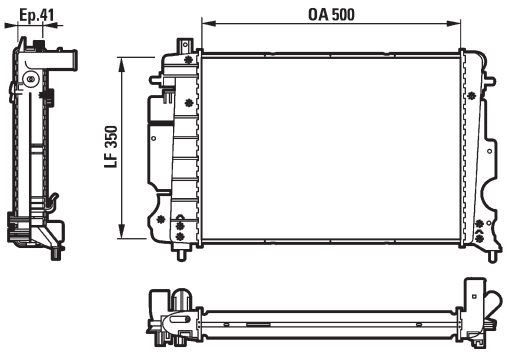


| | | |
|---|---|---|
| SAAB 4729596 | 500x350x42 | 35mm L |
| | - | 35mm L |

## 732120 RA1460 ALB

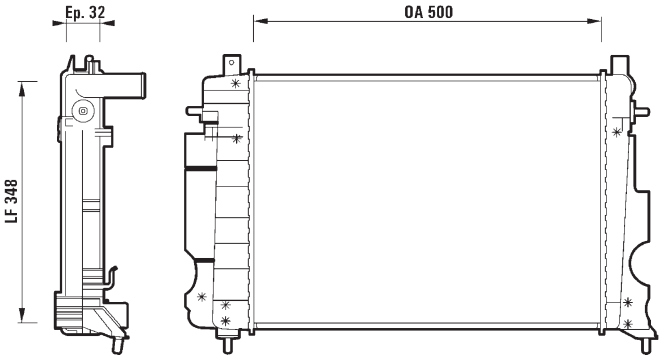


| | | |
|---|---|---|
| SAAB 4729562 | 500x348,2x32 | 35mm L |
| | - | 35mm L |

## 732147 ALB

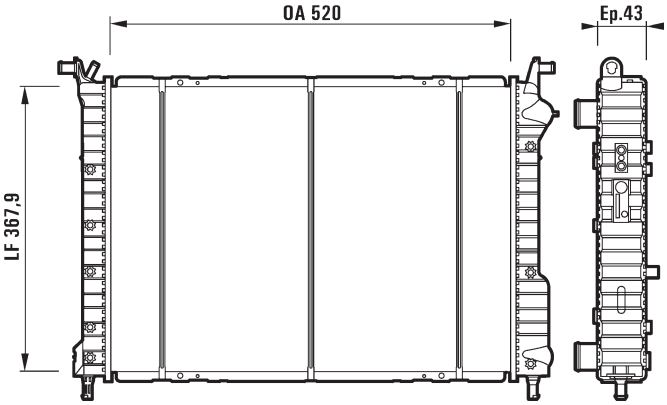


| | | |
|---|---|---|
| FIAT 46453389 | 520x367,9x43 | 35mm L |
| | - | 35mm L |

## 732122 RA1489 ALB

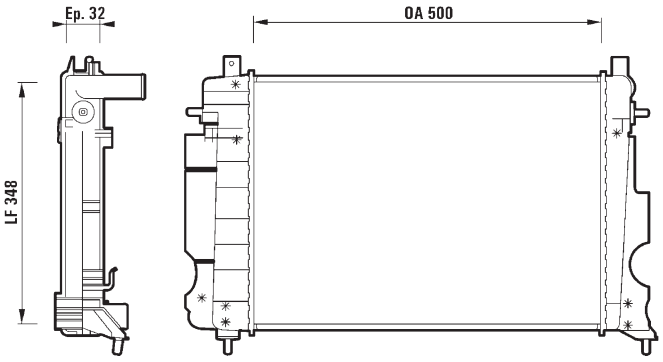


| | | |
|---|---|---|
| SAAB 4729588 | 500x347x32 | 35mm L |
| | - | 35mm L |

## 732175 RM2052 ALM

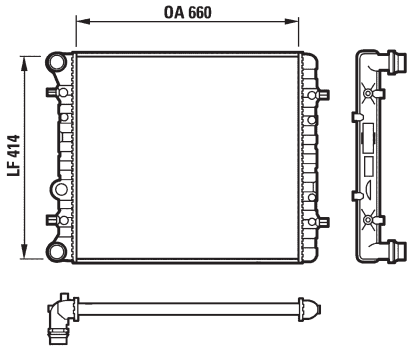


| | | |
|---|---|---|
| AUDI 1J0121253N<br>SEAT 1J0121253N<br>SKODA 1J0121253N<br>VOLKSWAGEN 1J0121253N | 650x414,5x23 | |
| | - | |

## 732177 RM1186 ALM

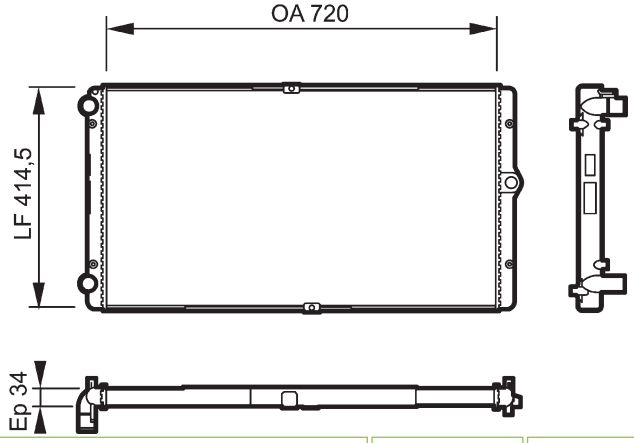


| | | |
|---|---|---|
| VOLKSWAGEN 7D0121253A | 720x414,5x34 | 31mm L |
| | - | 31mm L |

## 732218 RM163 ALM

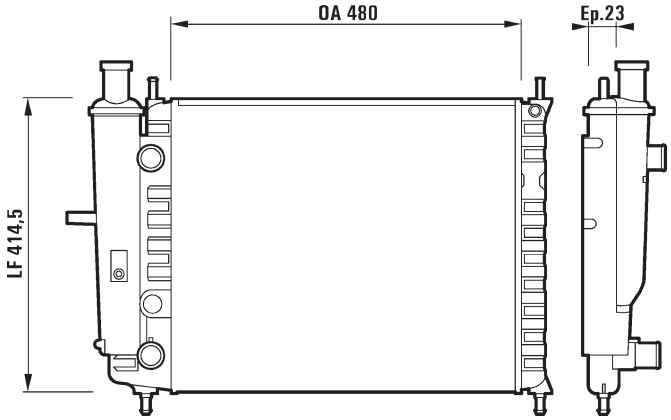


| | | |
|---|---|---|
| FIAT 46480388 | 480x414,5x23 | 35mm L |
| | - | 35mm L |

## 732198 ALB

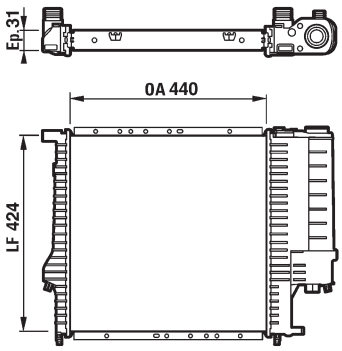


| | | |
|---|---|---|
| BMW 17111728905 | 440x424x31 | 40mm L |
| | + | 40mm L |

## 732248 RA2034 ALB

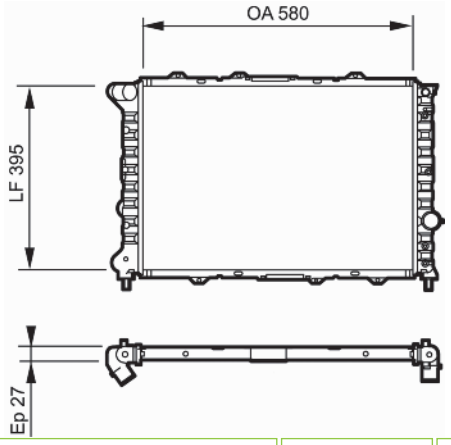


| | | |
|---|---|---|
| ALFA ROMEO 60690405 | 580x394,2x24 | 35mm L |
| | - | 35mm L |

## 732199 ALB

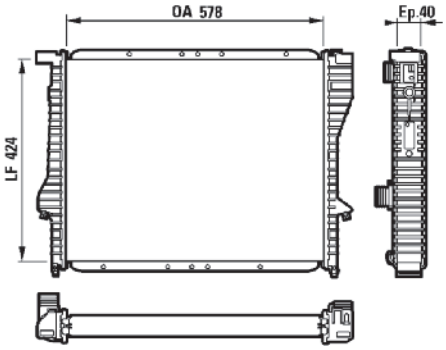


| | | |
|---|---|---|
| BMW 17101715319 | 578x424x40 | 38mm QC |
| | - | 38mm QC |

## 732312 ALB

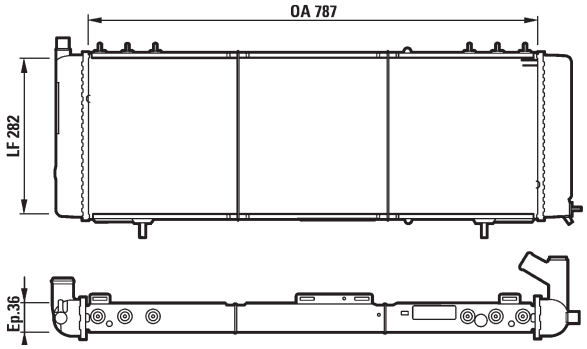


| | | |
|---|---|---|
| JEEP 52029100 | 787x282x36 | 32mm L |
| | - | 38mm L |

## 732315 ALB

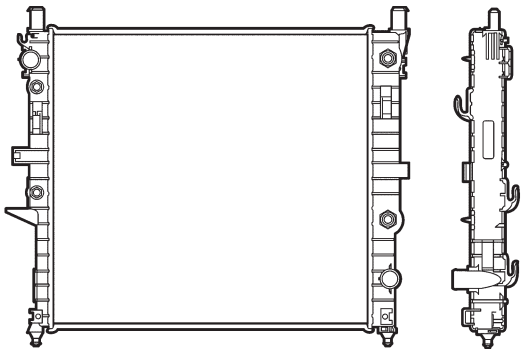

| | | |
|---|---|---|
| MERCEDES 1635002204 | 610x546x32 | 36mm L |
| | + | 36mm L |

## 732323 CBS

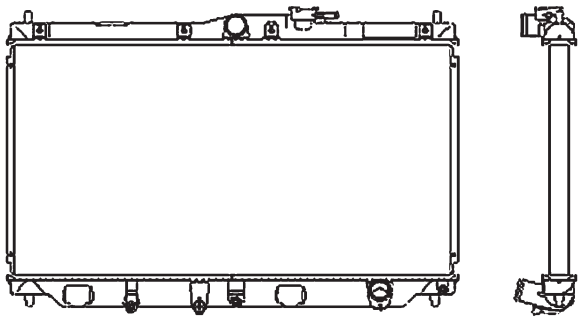

| | | |
|---|---|---|
| HONDA 19010PT1003<br>ROVER GRD168 | 352x668x32 | 32mm L |
| | - | 32mm L |

## 732316 RM1122 ALM

732316

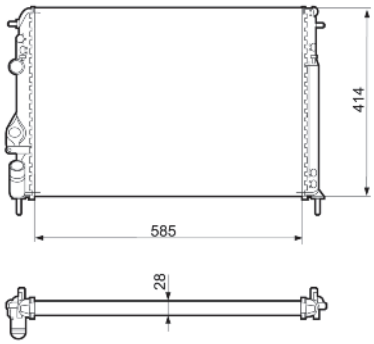


| | | |
|---|---|---|
| RENAULT 7700425842 | 585x414,5x23 | 32mm L |
| | - | 32mm L |

## 732325 CBS

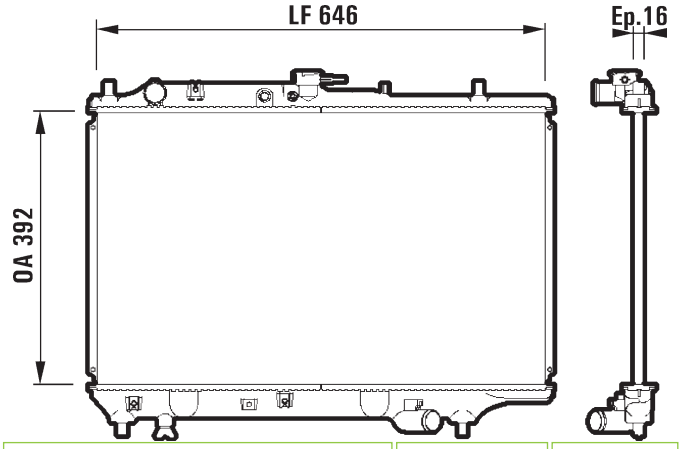


| | | |
|---|---|---|
| MAZDA B6S715200D | 392x646x16 | 31mm L |
| | - | 31mm L |

## 732317 RM1145 ALM

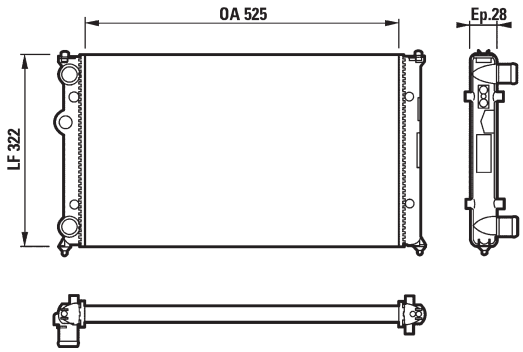


| | | |
|---|---|---|
| SEAT 6K0121253AD | 525x322x28 | 32mm L |
| | - | 32mm L |

## 732326 CBS

732326

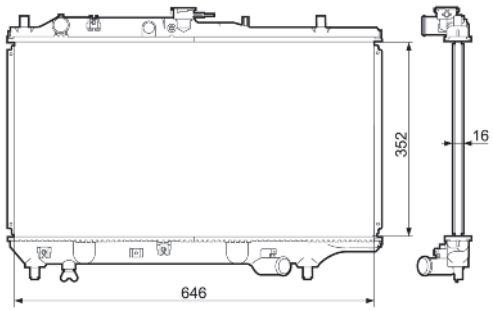


| | | |
|---|---|---|
| MAZDA B55715200B | 352x646x16 | 31mm L |
| | - | 31mm L |

## 732327 ALB

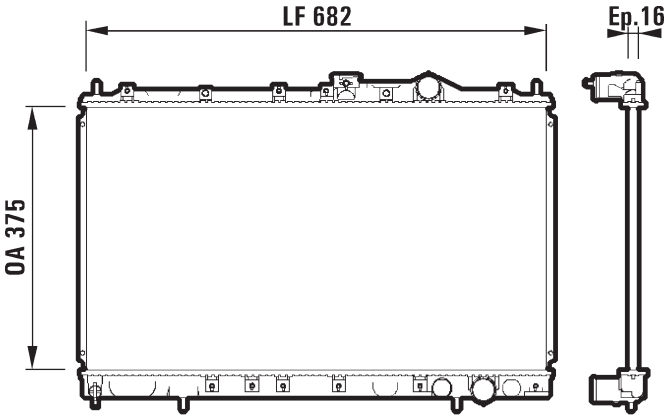


| | | |
|---|---|---|
| MITSUBISHI MB924972 | 375x682x16 | 35mm L |
| - | | 35mm L |

## 732346 ALB

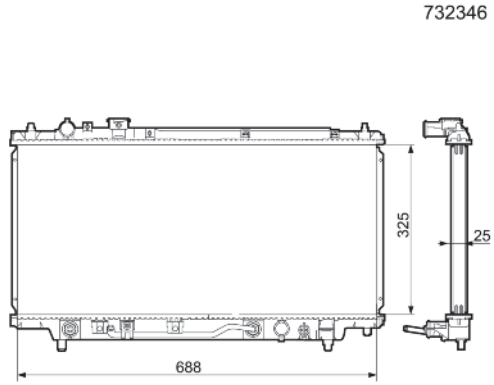


| | | |
|---|---|---|
| MAZDA BPE715200 | 325x688x25 | 28mm L |
| + | | 28mm L |

## 732338 ALM

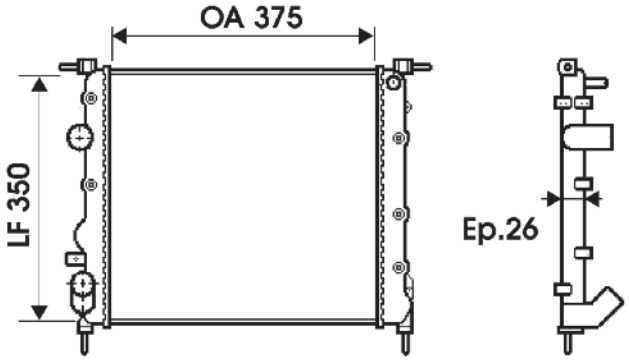


| | | |
|---|---|---|
| RENAULT 7700430647 | 375x350x26 | 32mm L |
| - | | 32mm L |

## 732347 RM1353 ALM

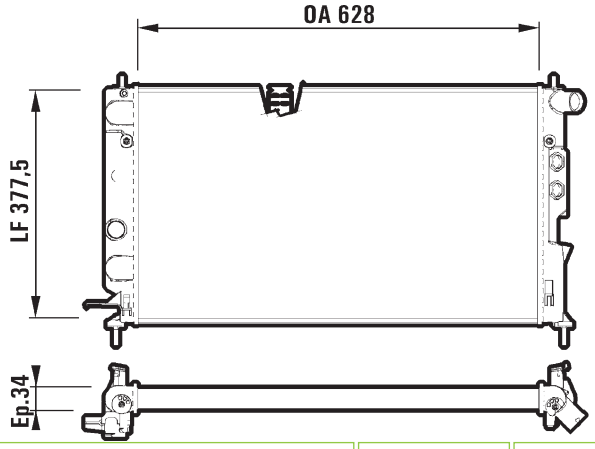


| | | |
|---|---|---|
| OPEL 1300185<br>VAUXHALL 52479098 | 628x377,5x34 | 34mm L |
| - | | 34mm L |

## 732345 ALB

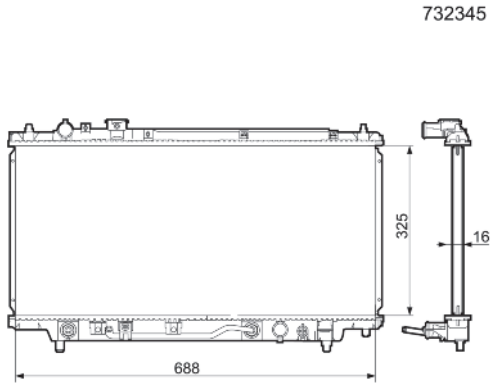


| | | |
|---|---|---|
| MAZDA B6FN15200 | 325x688x16 | 28mm L |
| + | | 28mm L |

## 732348 RM1356 ALM

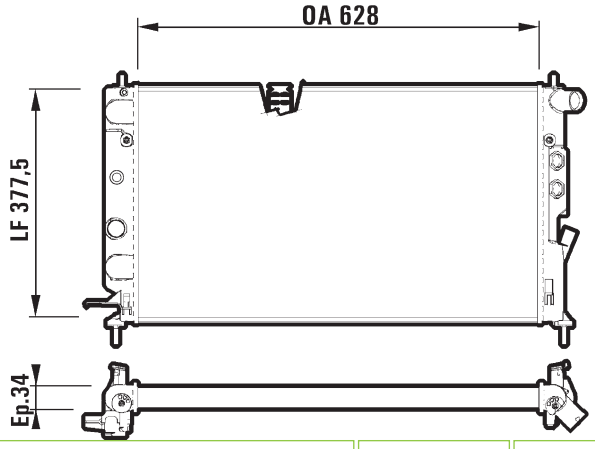


| | | |
|---|---|---|
| OPEL 1300181<br>VAUXHALL 52479100 | 628x377,5x34 | 34mm L |
| - | | 34mm L |

## 732349 RA1486 ALB

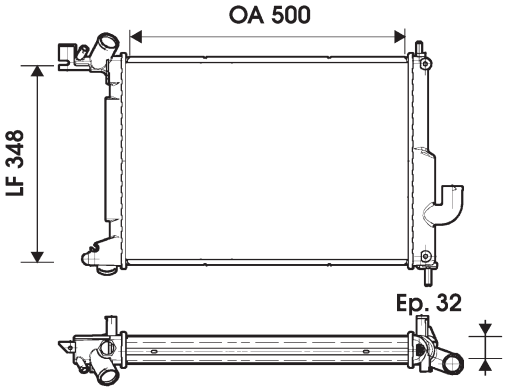


| | | | |
|---|---|---|---|
| OPEL 1300178<br>VAUXHALL 52479093 | 500x348x32 | 34mm L | |
| | - | 34mm L | |

## 732366 ALB

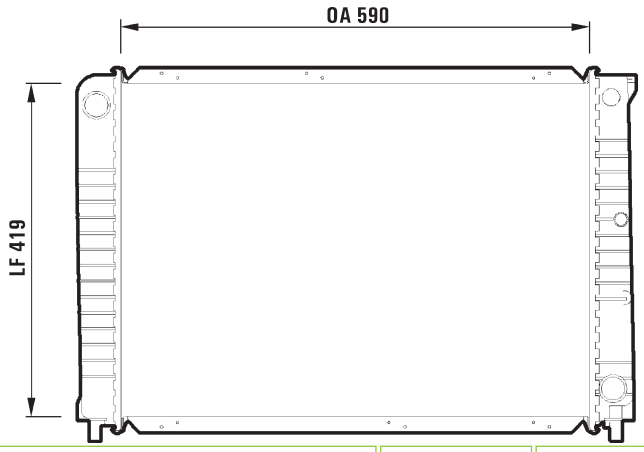


| | | | |
|---|---|---|---|
| VOLVO 86038544 | 590x419 | 34mm L | |
| | - | 34mm L | |

## 732361 RM1754 ALM

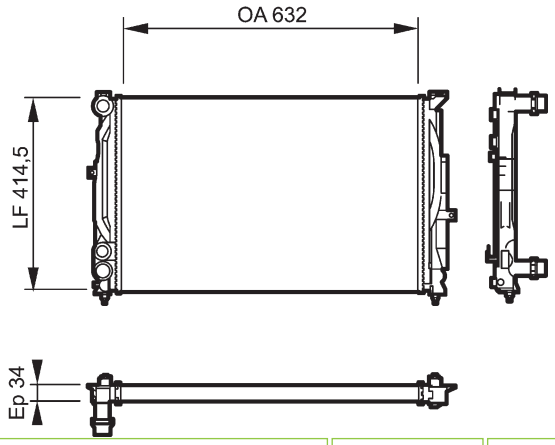


| | | | |
|---|---|---|---|
| AUDI 8D0121251P<br>SKODA 8D0121251P<br>VOLKSWAGEN 8D0121251P | 632x414,5x34 | 32mm QC | |
| | - | 32mm QC | |

## 732368 ALB

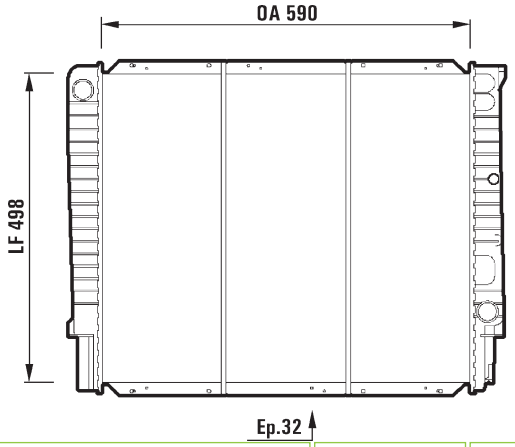


| | | | |
|---|---|---|---|
| VOLVO 86038528 | 590x498x32 | 34mm L | |
| | - | 34mm L | |

## 732365 CBS

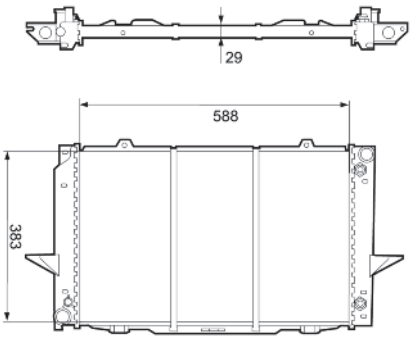


| | | | |
|---|---|---|---|
| VOLVO 8602566 | 588x383x29 | 37mm L | |
| | + | 37mm L | |

## 732369 ALB

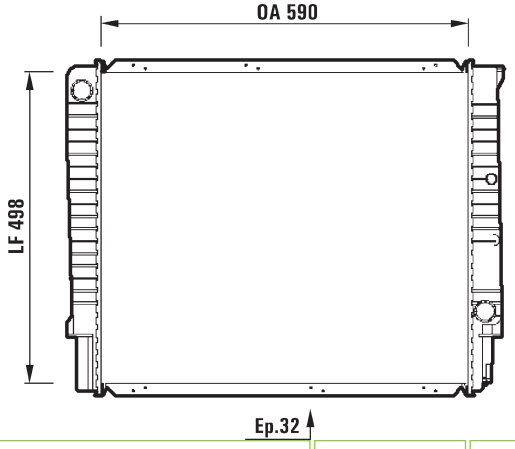


| | | | |
|---|---|---|---|
| VOLVO 13785902 | 590x498x32 | 34mm L | |
| | - | 34mm L | |

## 732372 ALB

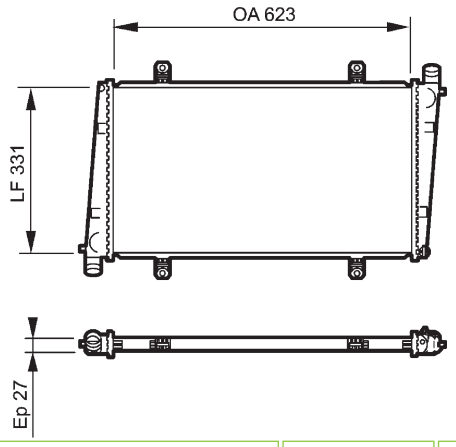


| | | |
|---|---|---|
| VOLVO 8602117 | 623x331x27 | 32mm L |
| | | 32mm L |

## 732396 RA1162 ALB

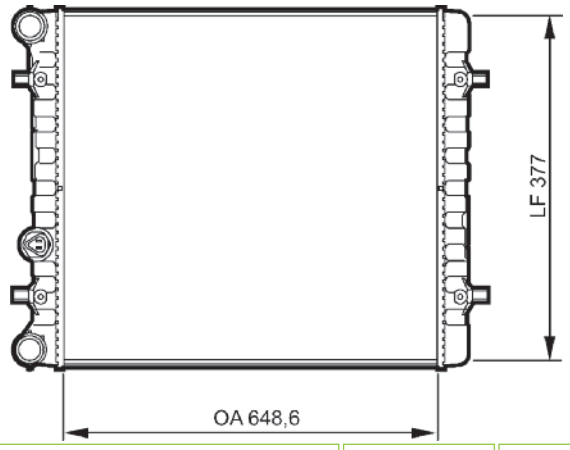


| | | |
|---|---|---|
| VOLKSWAGEN 1C0121253A | 648,6x377x34 | 32mm L |
| | | 32mm L |

## 732387 RA1123 ALB

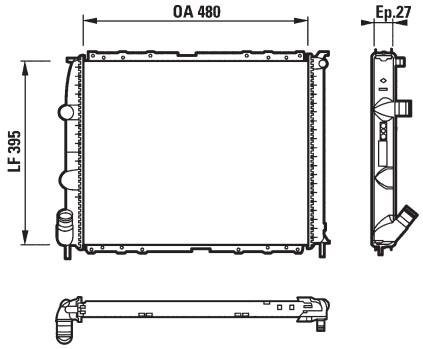


| | | |
|---|---|---|
| RENAULT 7700430648 | 480x395,2x27 | 32mm L |
| | | 32mm L |

## 732397 RM1194 ALM

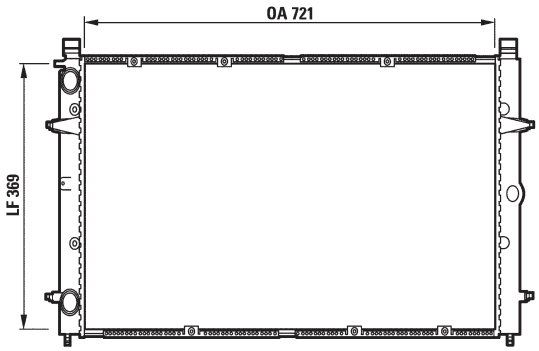


| | | |
|---|---|---|
| VOLKSWAGEN 701121253K | 720x377,5x34 | 32mm L |
| | | 32mm L |

## 732389 RM1219 ALM

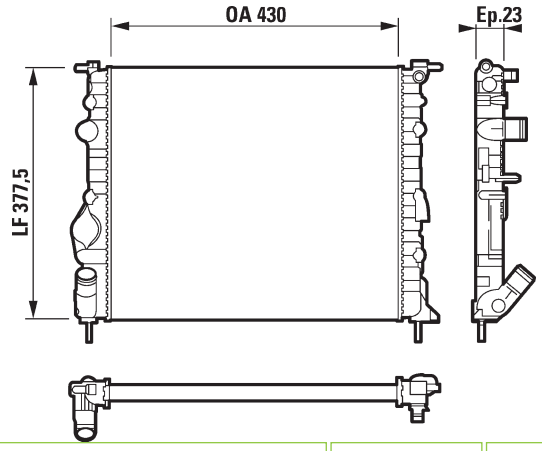


| | | |
|---|---|---|
| NISSAN 2140000QAV<br>RENAULT 7700314382 | 430x377,5x23 | 32mm L |
| | | 32mm L |

## 732399 ALB

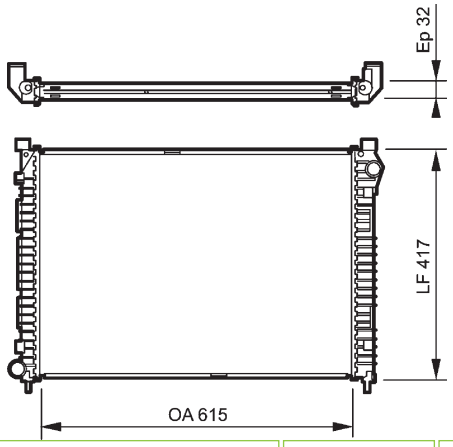


| | | |
|---|---|---|
| LAND ROVER ESR4197 | 615x417x32 | 32mm L |
| | | 32mm L |

## 732400 ALB

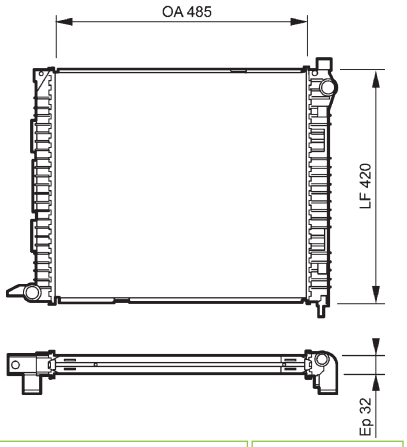


| | | |
|---|---|---|
| LAND ROVER ESR4199 | 485x420x32 | 32mm L |
| | | 32mm L |

## 732410 CBS

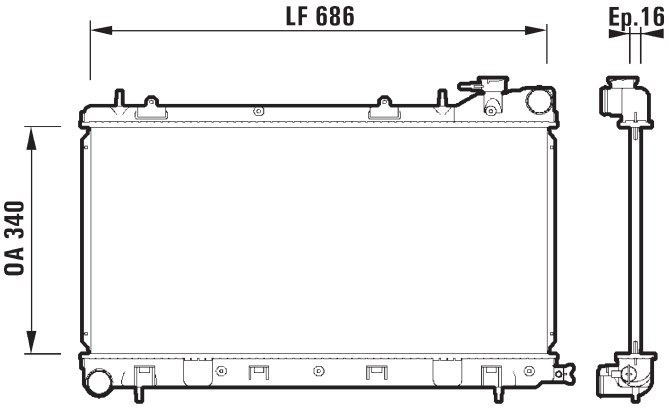


| | | |
|---|---|---|
| SUBARU 45199FC371 | 340x686x16 | 38mm L |
| | | 38mm L |

## 732402 ALB

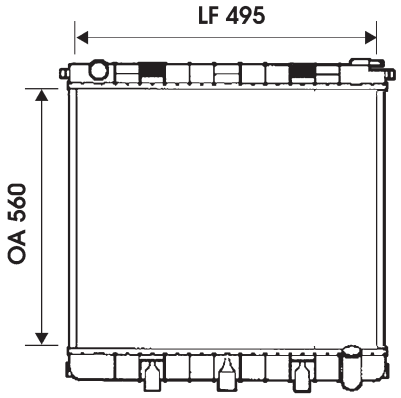


| | | |
|---|---|---|
| LAND ROVER ESR2269 | 495x560x41 | 35mm L |
| | | 35mm L |

## 732413 ALB

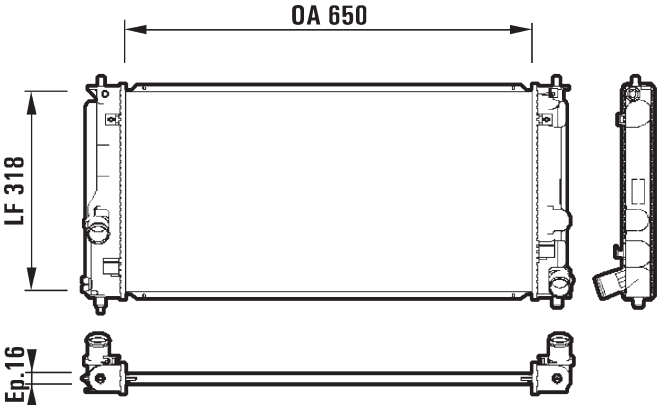


| | | |
|---|---|---|
| TOYOTA 1640022060 | 650x318x16 | 34mm L |
| | | 34mm L |

## 732405 ALB

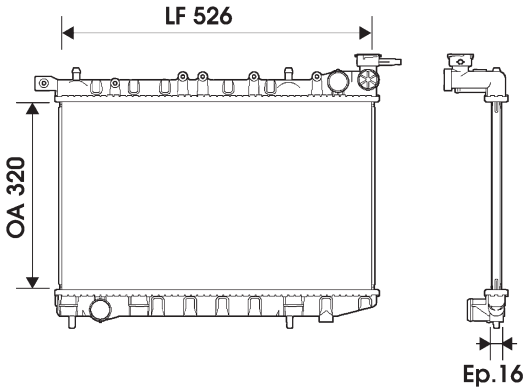


| | | |
|---|---|---|
| NISSAN 214100M100 | 320x526x16 | 35mm L |
| | | 35mm L |

## 732415 ALB

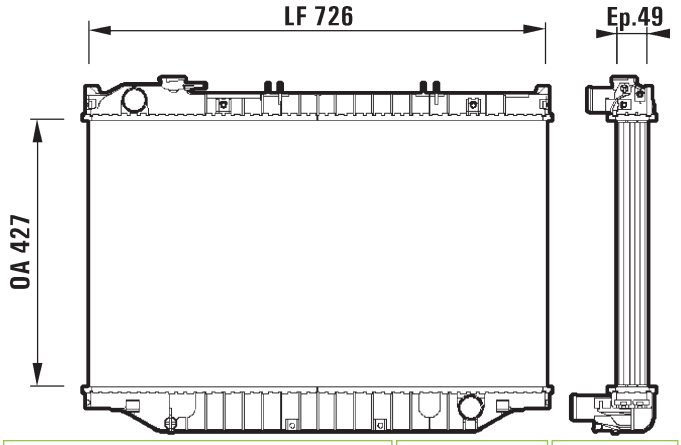


| | | |
|---|---|---|
| TOYOTA 1640017020 | 427x726x49 | 38mm L |
| | | 38mm L |

## 732416 CBS

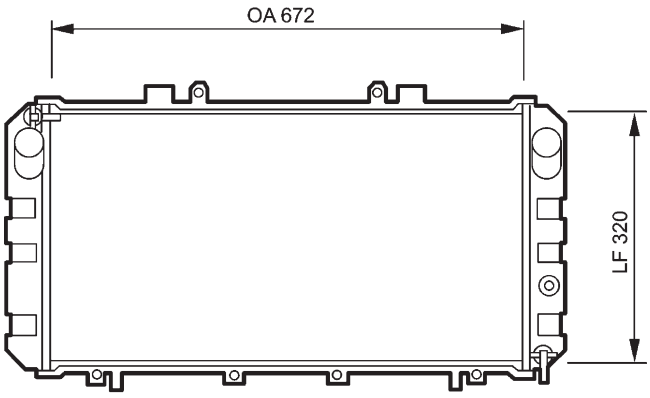


Ep 36

| | | |
|---|---|---|
| TOYOTA 1640074600 | 672x320x36 | L |
| | | L |

## 732421 RM1512 ALM

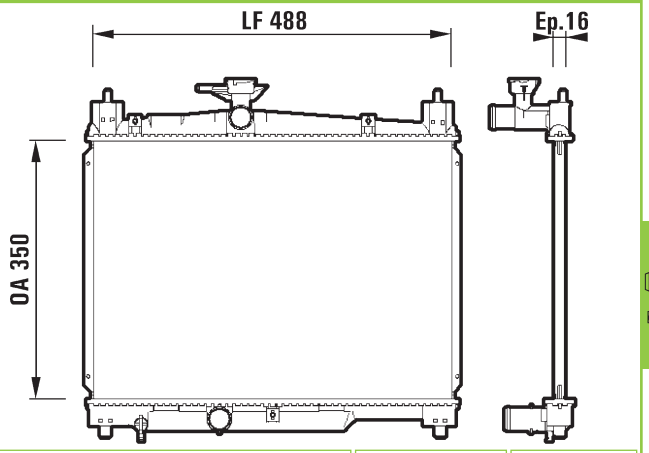


| | | |
|---|---|---|
| TOYOTA 164000J010 | 350x470x34 | 31mm L |
| | | 31mm L |

## 732417 CBS

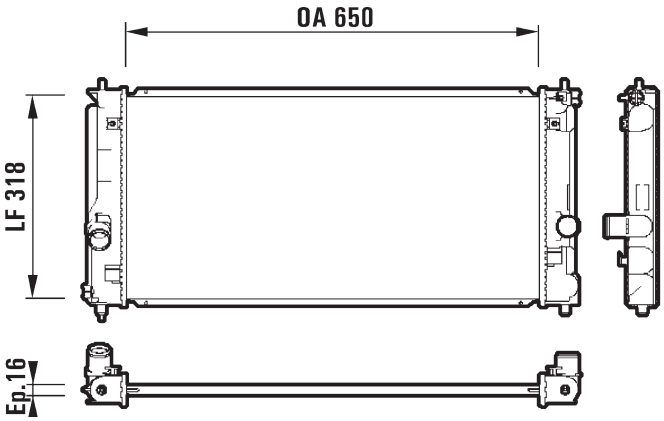


| | | |
|---|---|---|
| TOYOTA 1640022110 | 650x318x16 | |
| | | 34mm L |

## 732426 ALB

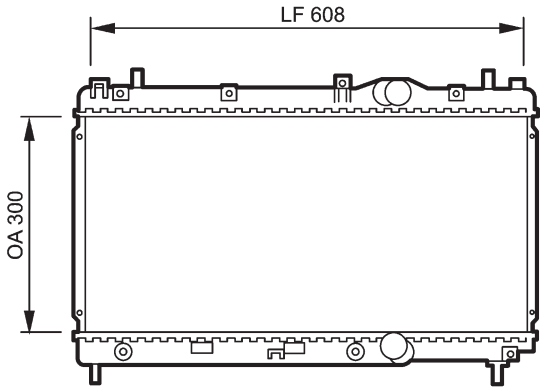


Ep 16

| | | |
|---|---|---|
| CHRYSLER 4740097 | 300x608x16 | 31mm L |
| | | 32mm L |

## 732420 ALB

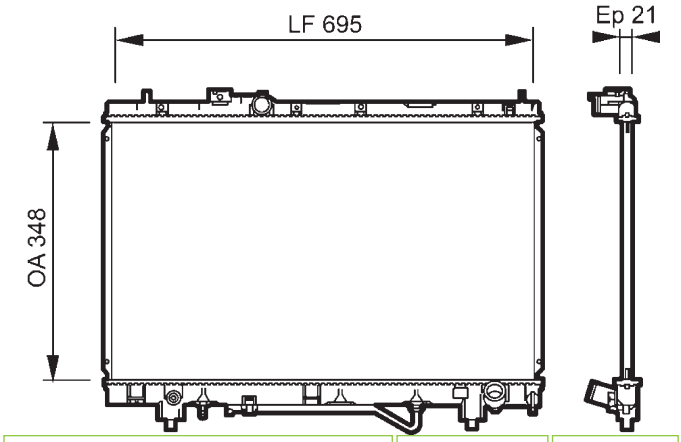


| | | |
|---|---|---|
| TOYOTA 164007A282 | 348x695x21 | 31mm L |
| | | 31mm L |

## 732427 RA1164 ALB

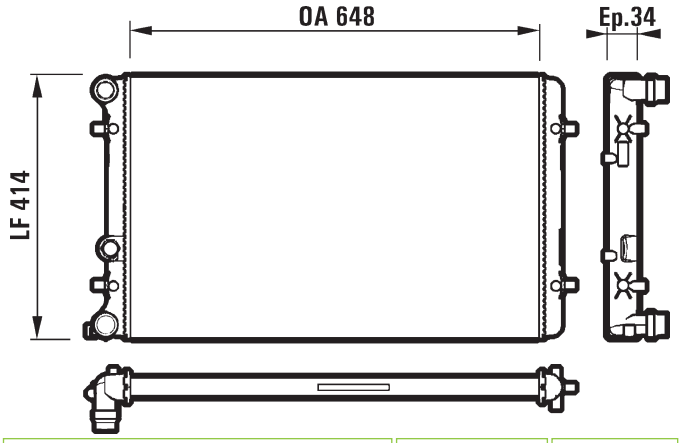


| | | |
|---|---|---|
| AUDI 1J0121253S<br>SEAT 1J0121253S<br>VOLKSWAGEN 1J0121253S | 648,6x414x34 | 32mm QC |
| | | 32mm QC |

## 732435 CBS

732435

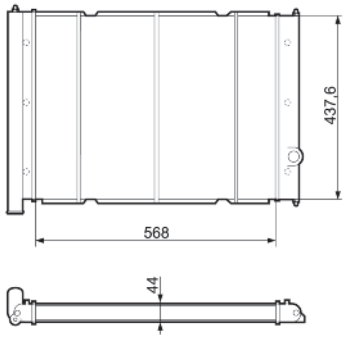


| | | |
|---|---|---|
| VOLKSWAGEN 068121253E | 568x437,6x44 | 32mm L |
| | | 32mm L |

## 732438 CBS

732438

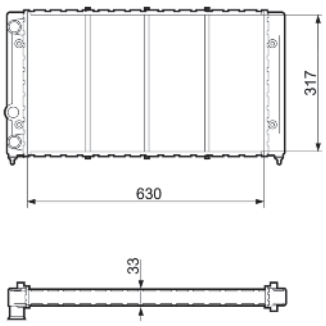


| | | |
|---|---|---|
| VOLKSWAGEN 353121253N | 630x317x33 | 32mm L |
| | | 32mm L |

## 732436 ALM

732436

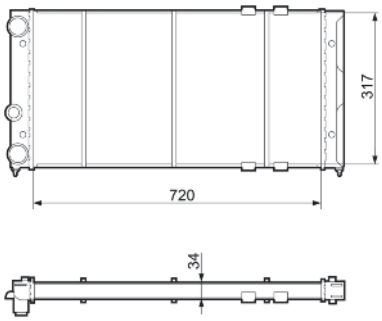


| | | |
|---|---|---|
| VOLKSWAGEN 353121253R | 720x317x34 | 32mm L |
| | | 32mm L |

## 732442 CBS

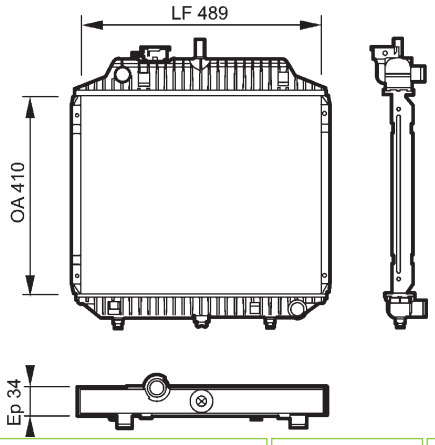


| | | |
|---|---|---|
| MERCEDES 6315000502 | 410x489x34 | L |
| | | L |

## 732437 ALM

732437

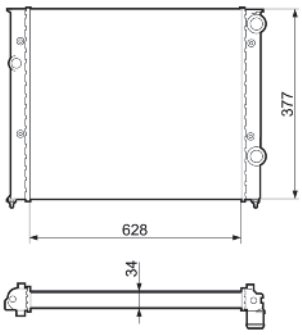


| | | |
|---|---|---|
| VOLKSWAGEN 1H0121253AE | 628x377x34 | 32mm L |
| | | 32mm L |

## 732446 ALB

732446

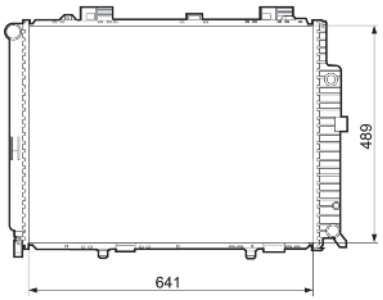


| | | |
|---|---|---|
| MERCEDES 2105001203 | 641x489x42 | 38mm L |
| | | 38mm L |

## 732447 ALB

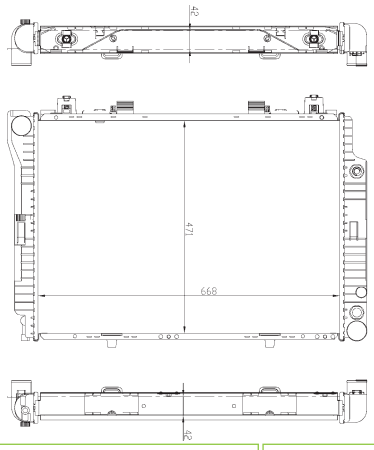


| | | |
|---|---|---|
| MERCESDES 1405002303 | 668x471x42 | 43mm L |
| + | | 43mm L |

## 732454 ALB

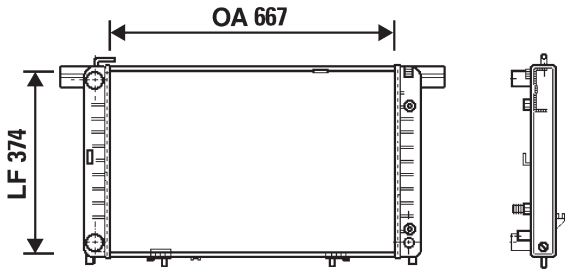


| | | |
|---|---|---|
| MERCEDES 1295000703 | 667x374x42 | 36mm L |
| - | | 36mm L |

## 732450 ALB

732450

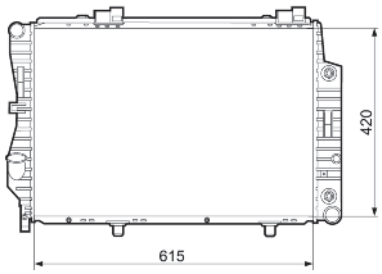


| | | |
|---|---|---|
| MERCEDES 2025004103 | 615x420x42 | 36mm L |
| + | | 36mm L |

## 732456 ALB

732456

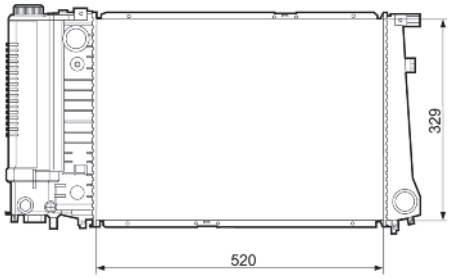


| | | |
|---|---|---|
| BMW 17111723941 | 520x329x33 | 40mm L |
| + | | 40mm L |

## 732451 ALB

732451

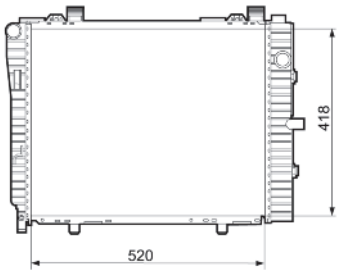


| | | |
|---|---|---|
| MERCEDES 2025005203 | 520x418x34 | 38mm L |
| - | | 38mm L |

## 732458 ALB

732458

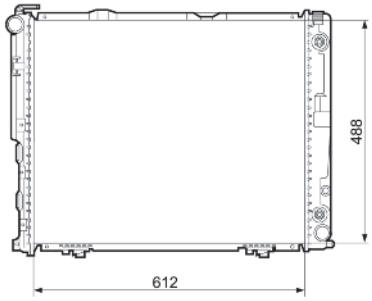


| | | |
|---|---|---|
| MERCEDES 1245001402 | 612x488x42 | 36mm L |
| - | | 36mm L |

## 732459 ALB

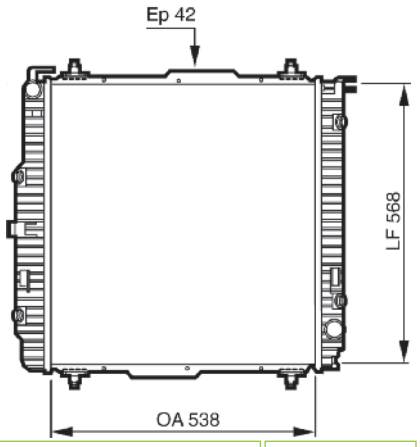


| | | |
|---|---|---|
| MERCEDES 4635001200 | 538x568x42 | L |
| | | L |

## 732471 ALB

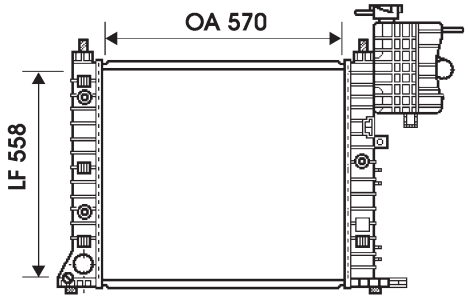


| | | |
|---|---|---|
| MERCEDES 6385012001 | 558x570x42 | 42mm L |
| | | 42mm L |

## 732460 RAB024 ALB

732460

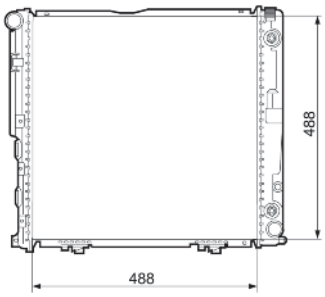


| | | |
|---|---|---|
| MERCEDES 1245006303 | 488x488x42 | 36mm L |
| | | 36mm L |

## 732472 ALB

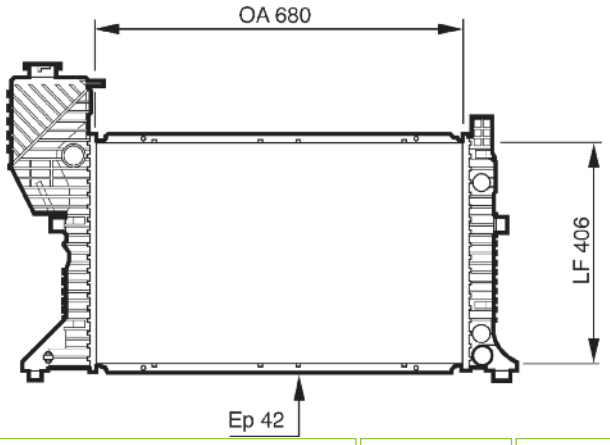


| | | |
|---|---|---|
| MERCEDES 9015003400 | 680x406x42 | 42mm L |
| | | 42mm L |

## 732462 RAB030 ALB

732462

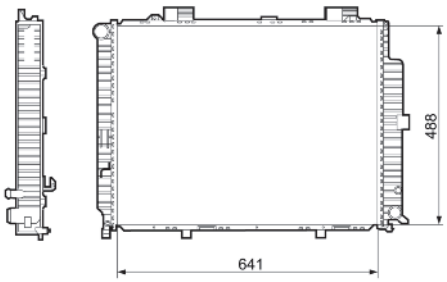


| | | |
|---|---|---|
| MERCEDES 2105003203 | 641x488x42 | 38mm L |
| | | 38mm L |

## 732474 ALB

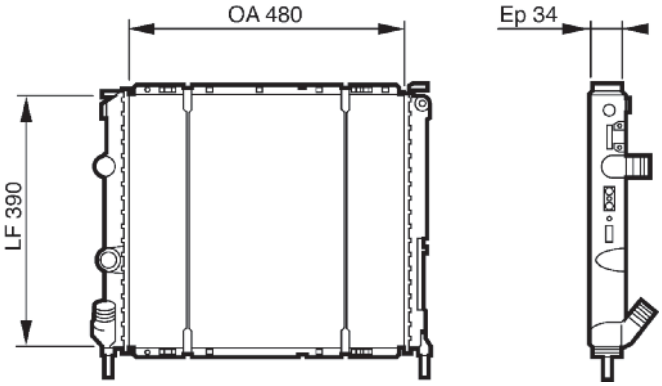


| | | |
|---|---|---|
| RENAULT 7700417175 | 480x390x34 | |
| | | L |

## 732475 CBS

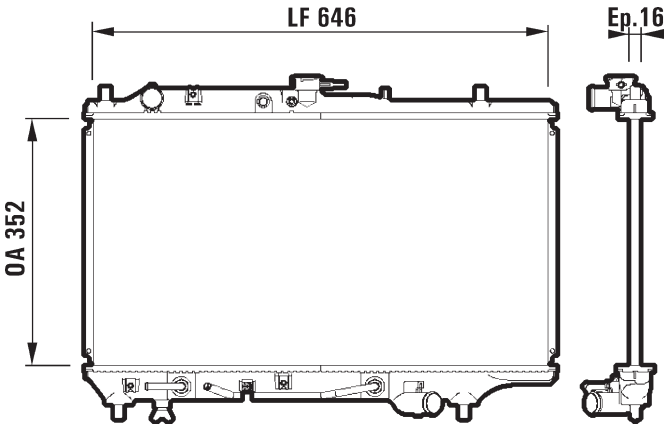


| | | | |
|---|---|---|---|
| MAZDA | B54715200A | 352x646x16 | 31mm L |
| | | + | 31mm L |

## 732483 ALB

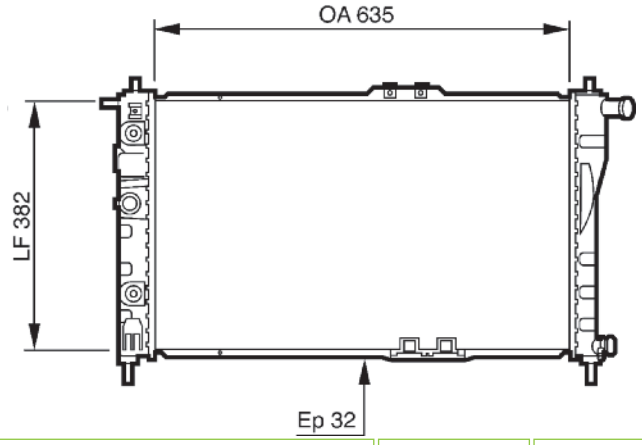


| | | | |
|---|---|---|---|
| DAEWOO | 96144847 | 635x382x32 | 35mm L |
| | | - | 35mm L |

## 732476 CBS

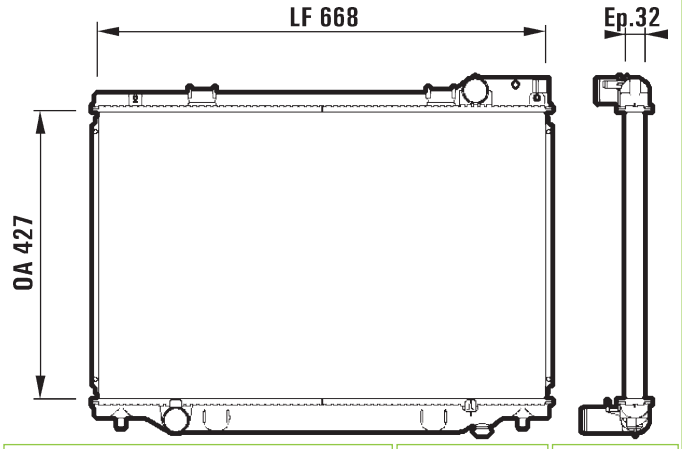


| | | | |
|---|---|---|---|
| TOYOTA | 1640076092 | 427x668x32 | 38mm L |
| | | - | 38mm L |

## 732484 CBS

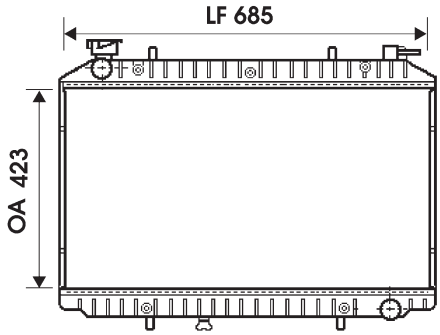


| | | | |
|---|---|---|---|
| NISSAN | 214109C101 | 423x685x24 | 35mm L |
| | | - | 35mm L |

## 732479 ALM

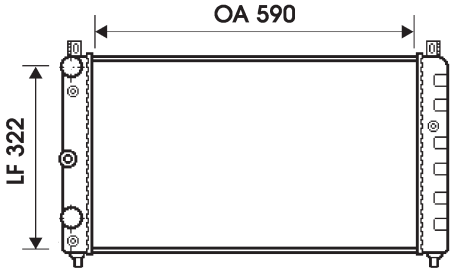


| | | | |
|---|---|---|---|
| SKODA | 6U0121253A | 590x322x34 | 32mm L |
| VOLKSWAGEN | 6U0121253A | | |
| | | - | 32mm L |

## 732487 ALB

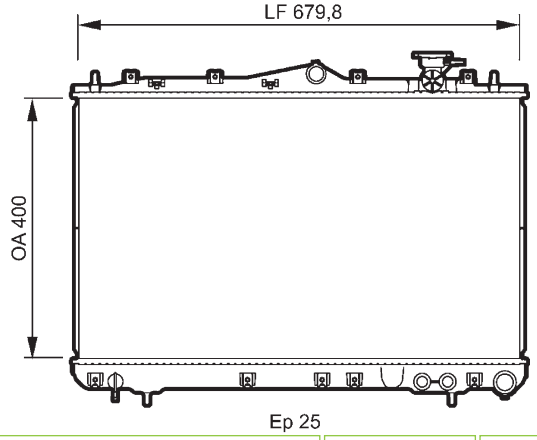


| | | | |
|---|---|---|---|
| HYUNDAI | 2531034000 | 400x679,8x25 | 35mm L |
| | | - | 35mm L |

## 732488 CBS

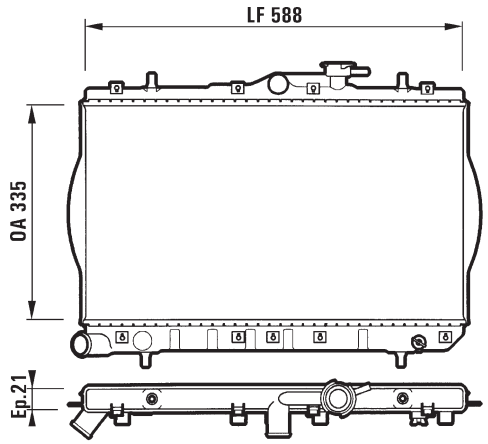


| | | |
|---|---|---|
| HYUNDAI 2531022025 | 335x588x21 | 33mm L |
| | | 33mm L |

## 732505 RM199 ALM

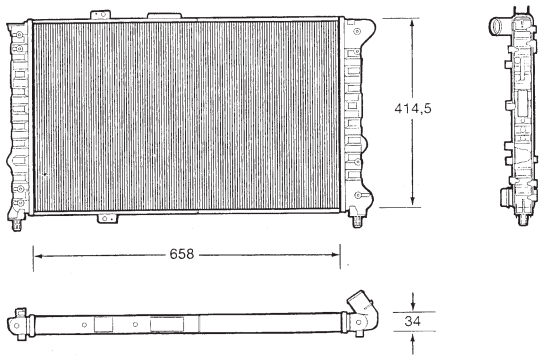


| | | |
|---|---|---|
| ALFA ROMEO 60663808 | 658x414,5x34 | 35mm L |
| | | 35mm L |

## 732497 CBS

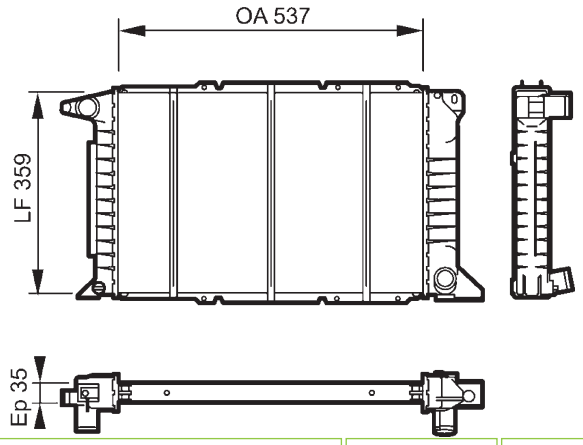


| | | |
|---|---|---|
| FORD 1023920 | 537x359x35 | 38mm L |
| | | 38mm L |

## 732517 RM1126 ALM

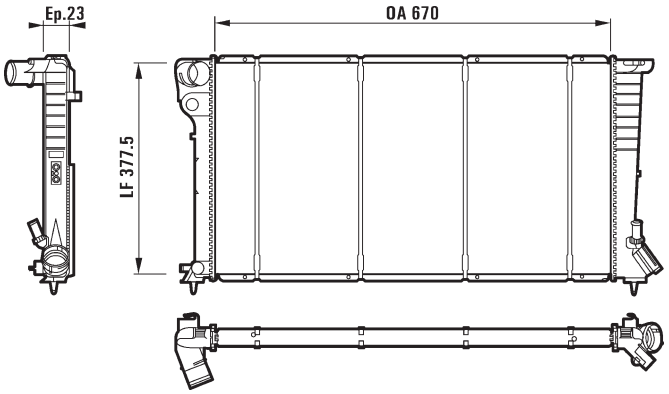


| | | |
|---|---|---|
| CITROEN 133041<br>PEUGEOT 133041 | 670x377,5x23 | 40mm L |
| | | 40mm QC |

## 732503 RM201 ALM

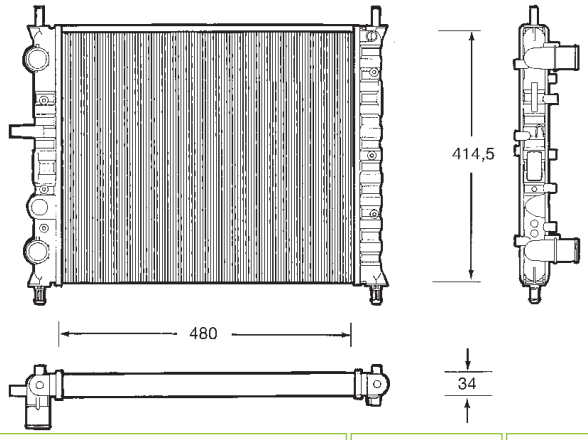


| | | |
|---|---|---|
| FIAT 46737569 | 480x414x34 | 35mm L |
| | | 35mm L |

## 732518 CBS

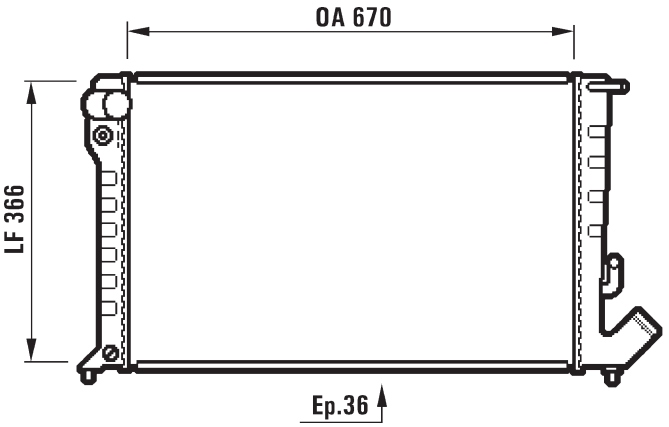


| | | |
|---|---|---|
| CITROEN 133055<br>PEUGEOT 133055 | 670x366x36 | 40mm L |
| | | 40mm QC |

## 732520 CBS

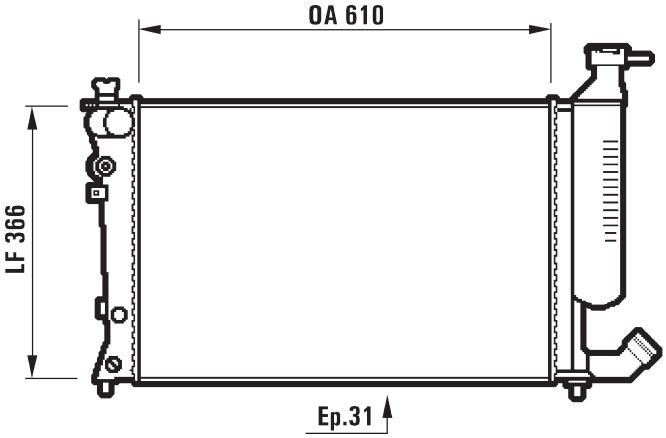


| | | | |
|---|---|---|---|
| CITROEN 133046<br>PEUGEOT 133049 | 610x366x31 | 40mm L | |
| | | 40mm QC | |

## 732525 ALB

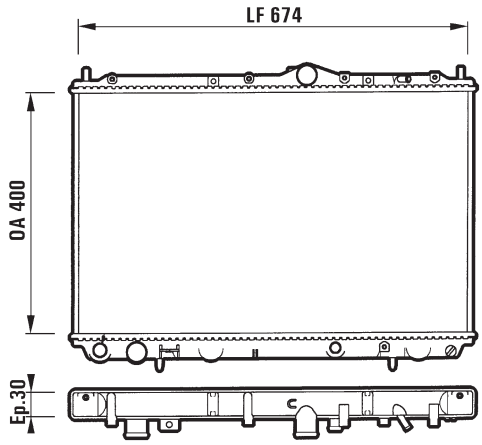


| | | | |
|---|---|---|---|
| MITSUBISHI MR187415<br>VOLVO 86021078 | 400x674x30 | 35mm L | |
| | | 35mm L | |

## 732523 RM1382 ALM

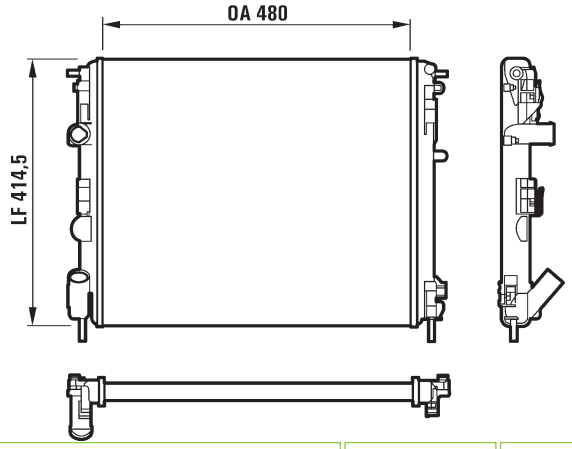


| | | | |
|---|---|---|---|
| NISSAN 2140000QAY<br>RENAULT 8200164413 | 480x414,5x28 | 32mm L | |
| | | 32mm L | |

## 732528 ALB

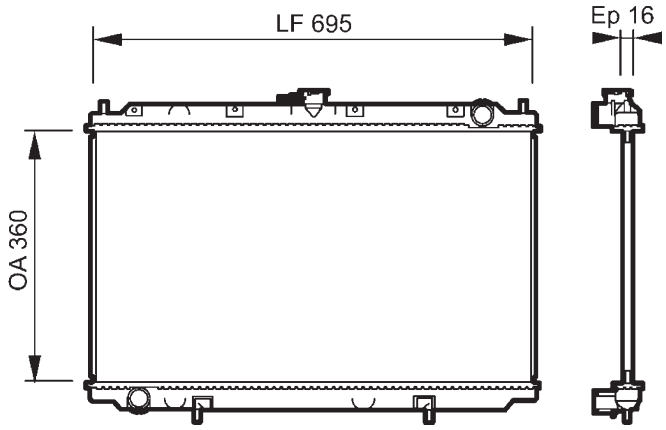


| | | | |
|---|---|---|---|
| NISSAN 214109F500 | 360x665x16 | 35mm L | |
| | | 35mm L | |

## 732524 ALB

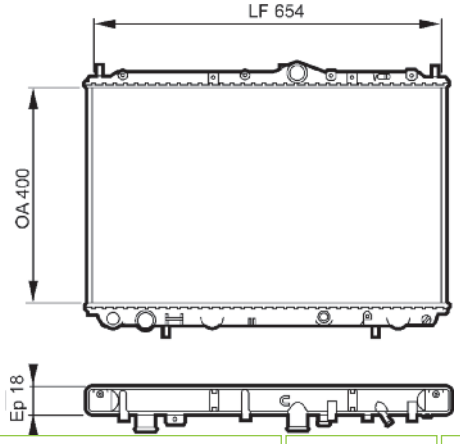


| | | | |
|---|---|---|---|
| MITSUBISHI MR299522<br>VOLVO 86020658 | 400x654x18 | 35mm L | |
| | | 35mm L | |

## 732529 ALB

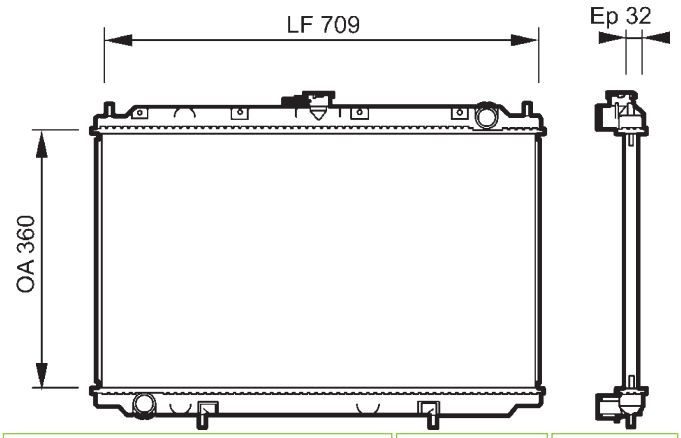


| | | | |
|---|---|---|---|
| NISSAN 214102F600 | 360x709x32 | 35mm L | |
| | | 35mm L | |

## 732534 RM1130 ALM

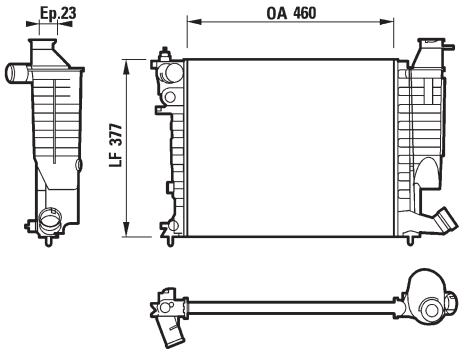


| | | |
|---|---|---|
| CITROEN 133051<br>PEUGEOT 133051 | 460x377,5x23 | 40mm L |
| | | 40mm QC |

## 732535 RM1213 ALM

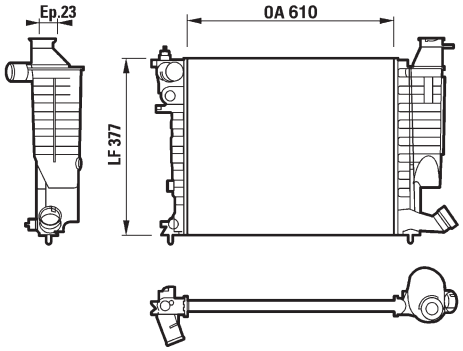


| | | |
|---|---|---|
| CITROEN 133045<br>PEUGEOT 133045 | 610x377,5x23 | 40mm L |
| | | 40mm QC |

## 732538 CBS

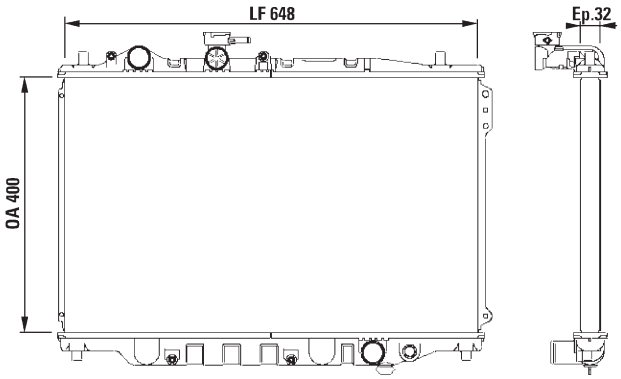


| | | |
|---|---|---|
| MAZDA FE4515200 | 400x648x32 | 35mm L |
| | | 35mm L |

## 732539 CBS

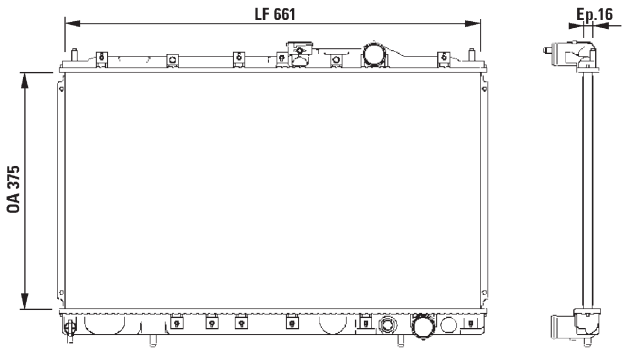


| | | |
|---|---|---|
| MITSUBISHI MB660562 | 375x661x16 | 35mm L |
| | | 35mm L |

## 732540 CBS

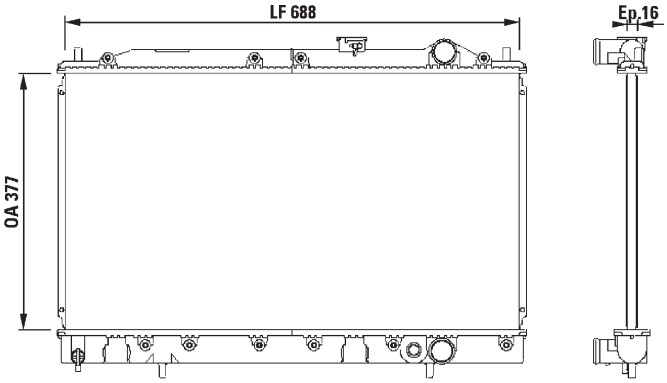


| | | |
|---|---|---|
| MITSUBISHI MB538543 | 377x688x16 | 28mm L |
| | | 35mm L |

## 732542 CBS

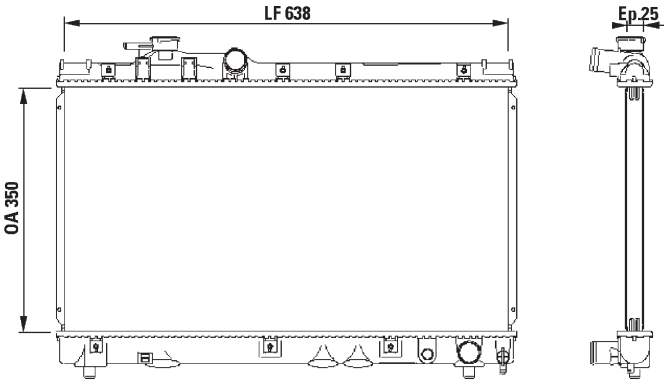


| | | |
|---|---|---|
| TOYOTA 164007A080 | 350x638x25 | 31mm L |
| | | 31mm L |

## 732543 CBS

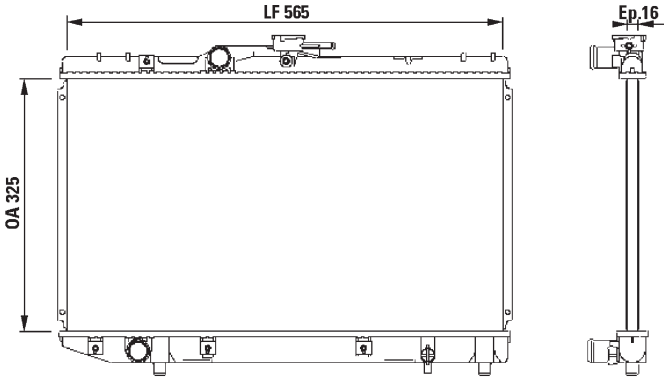


| | | |
|---|---|---|
| TOYOTA 1640011350 | 325x565x16 | 28mm L |
| - | | 28mm L |

## 732549 RM1180 ALM

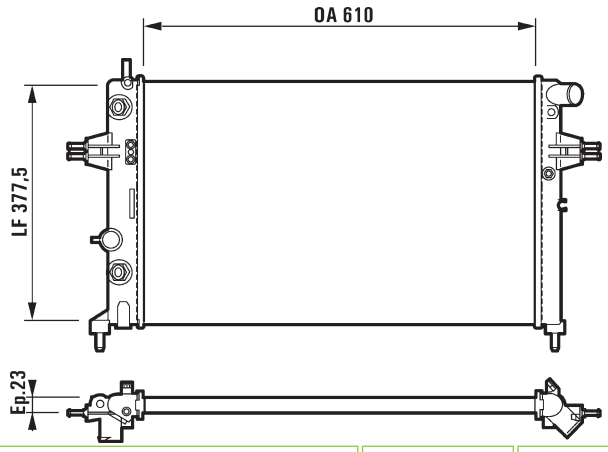


| | | |
|---|---|---|
| OPEL 1300257<br>VAUXHALL 93177121 | 610x377,5x23 | 35mm L |
| + | | 35mm L |

## 732544 ALB

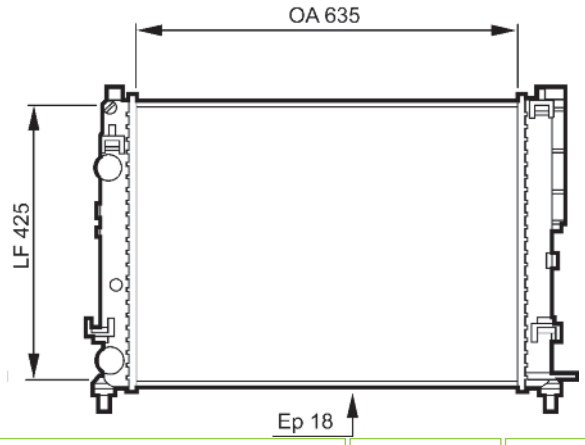


| | | |
|---|---|---|
| RENAULT 7701049754 | 635x425x18 | 32mm L |
| - | | 32mm L |

## 732550 RC1159 CBS

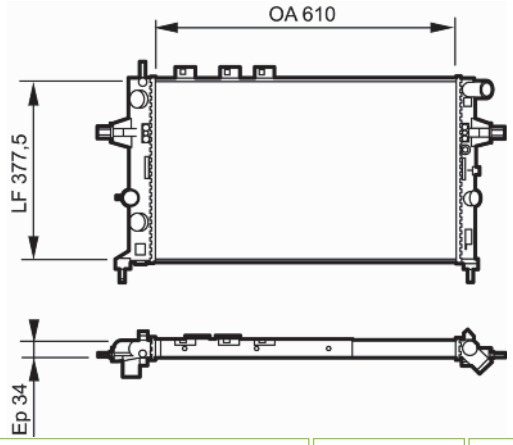


| | | |
|---|---|---|
| OPEL 1300215<br>VAUXHALL 9193268 | 610x377x34 | 34mm L |
| - | | 34mm L |

## 732548 RM1774 ALM

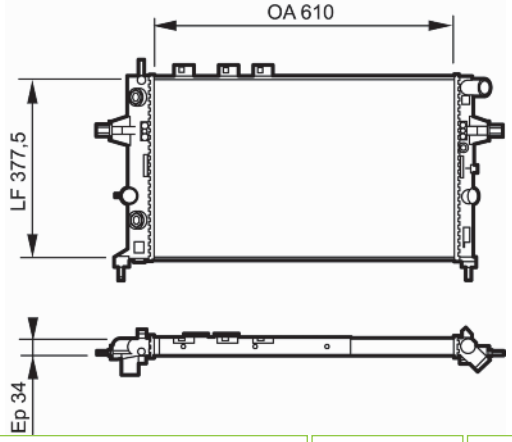


| | | |
|---|---|---|
| OPEL 1300241<br>VAUXHALL 9201018 | 610x377,5x34 | 35mm L |
| + | | 35mm L |

## 732551 RM1179 ALM

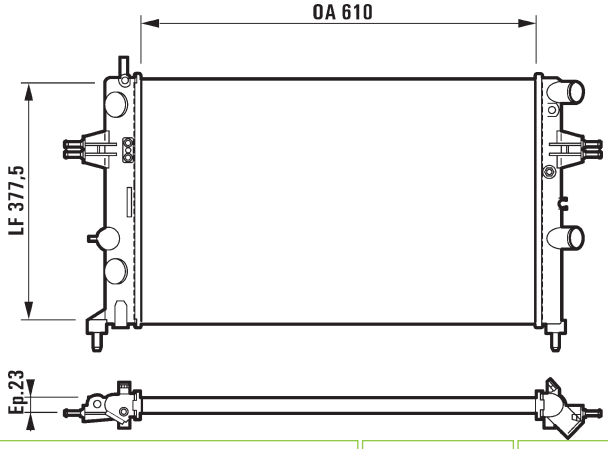


| | | |
|---|---|---|
| OPEL 1300212<br>VAUXHALL 9193264 | 610x377,5x23 | L |
| - | | L |

## 732552 ALB

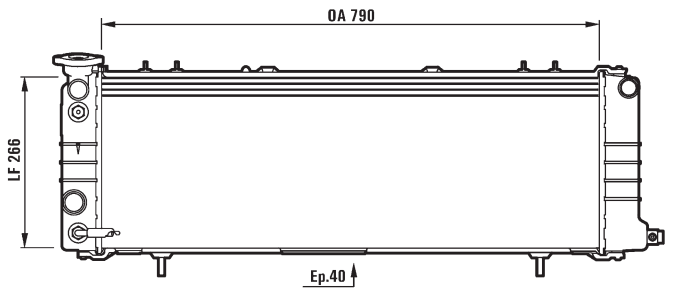


| | | | |
|---|---|---|---|
| JEEP | 52029046 | 790x266x40 | 32mm L |
| | | + | 38mm L |

## 732561 CBS

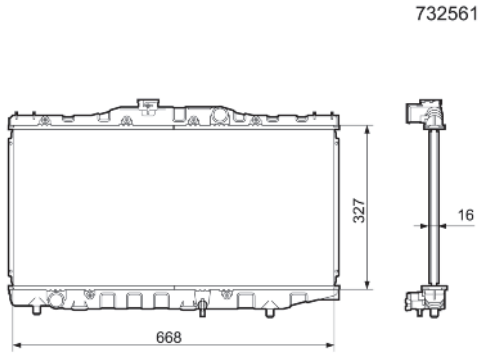


| | | | |
|---|---|---|---|
| TOYOTA | 1640015190 | 327x668x16 | 31mm L |
| | | - | 31mm L |

## 732557 RM205 ALM

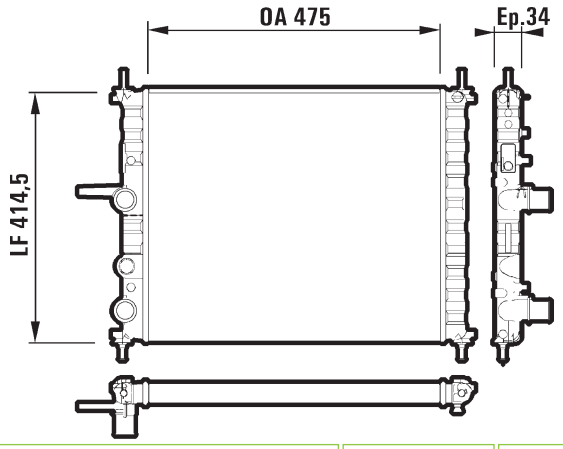


| | | | |
|---|---|---|---|
| FIAT | 71736183 | 475x414,5x34 | 35mm L |
| | | - | 35mm L |

## 732563 RM1157 ALM

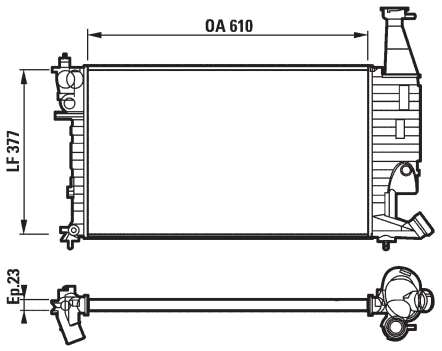


| | | | |
|---|---|---|---|
| CITROEN<br>PEUGEOT | 133303<br>133303 | 610x377x23 | 40mm L |
| | | - | 40mm QC |

## 732559 RM1129 ALM

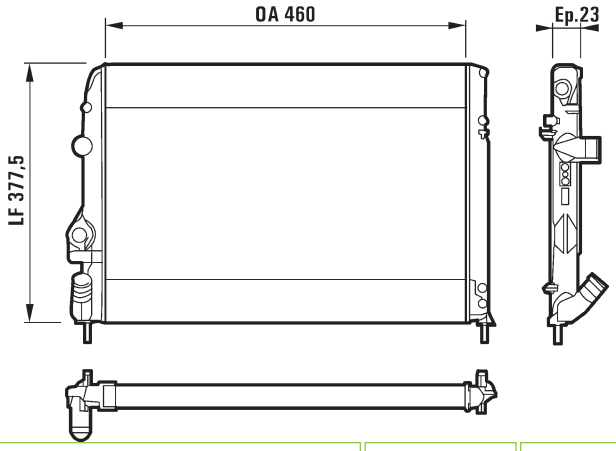


| | | | |
|---|---|---|---|
| RENAULT | 7700429769 | 585x377,5x34 | 32mm L |
| | | - | 32mm L |

## 732564 RM1158 ALM

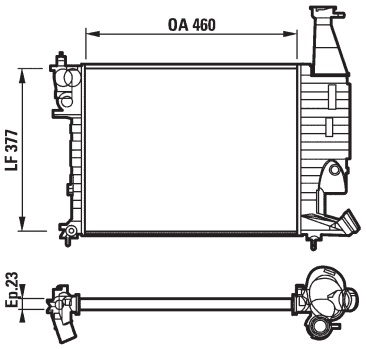


| | | | |
|---|---|---|---|
| CITROEN<br>PEUGEOT | 1331CP<br>133052 | 460x377x23 | 40mm L |
| | | - | 40mm QC |

## 732565 RM1740 ALM

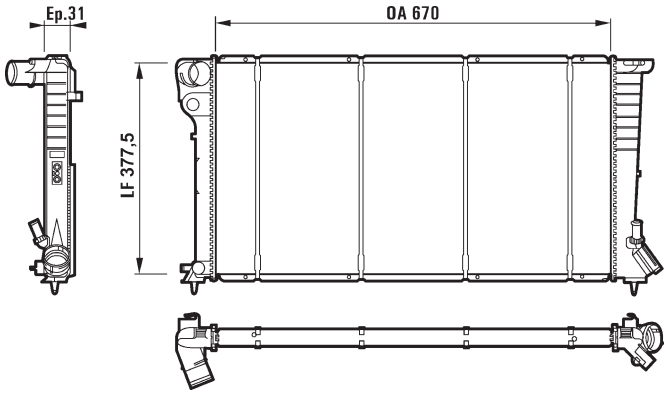


| | | |
|---|---|---|
| CITROEN 133057<br>PEUGEOT 133057 | 670x377,5x34 | 40mm L |
| | | 40mm QC |

## 732570 RA1122 ALB

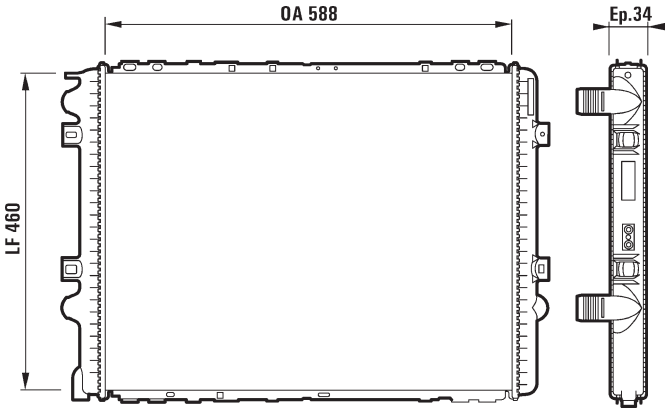


| | | |
|---|---|---|
| RENAULT VI 5010435102 | 588x460x34 | 37mm L |
| | | 37mm L |

## 732567 RA1107 ALB

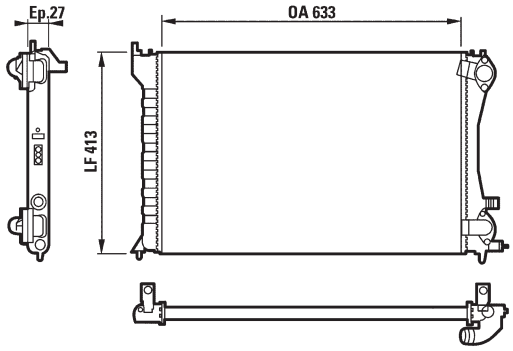


| | | |
|---|---|---|
| PEUGEOT 133044 | 633x413,7x27 | 32mm L |
| | | 32mm L |

## 732577 RM1733 ALM

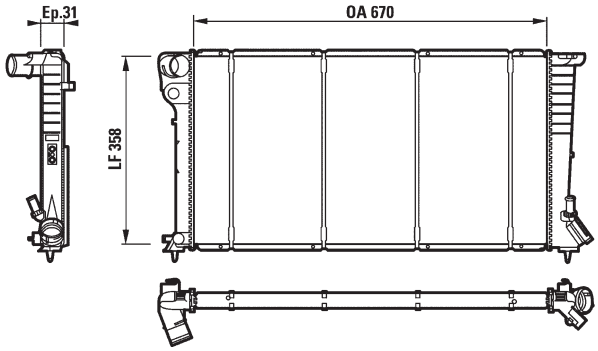


| | | |
|---|---|---|
| CITROEN 1331CW<br>PEUGEOT 1331CW | 670x377,5x34 | 40mm L |
| | | 40mm QC |

## 732569 RA1105 ALB

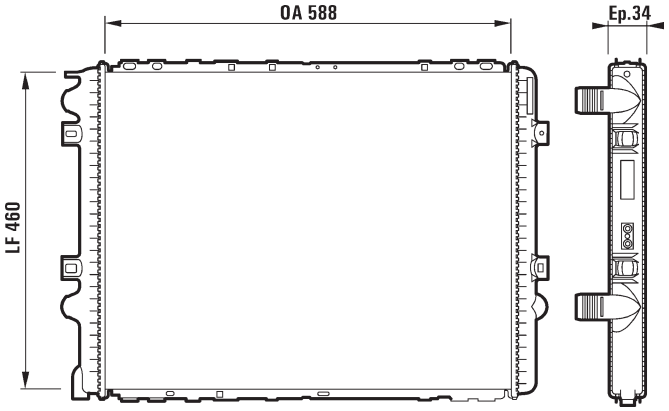


| | | |
|---|---|---|
| RENAULT VI 5010382645 | 588x460x34 | 32mm L |
| | | 32mm L |

## 732578 RM212 ALM

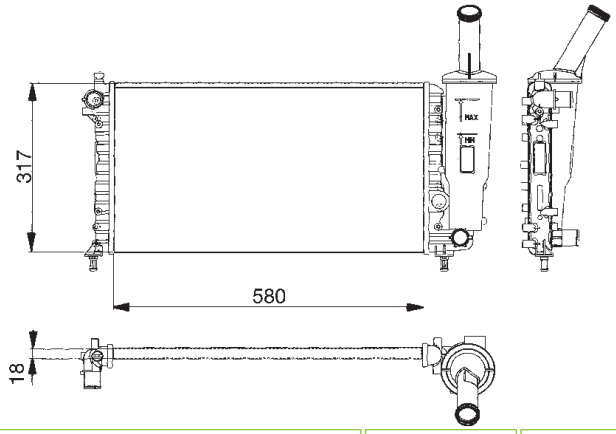


| | | |
|---|---|---|
| FIAT 46778148 | 580x317x18 | 30mm L |
| | | 30mm L |

## 732580 RM203 ALM

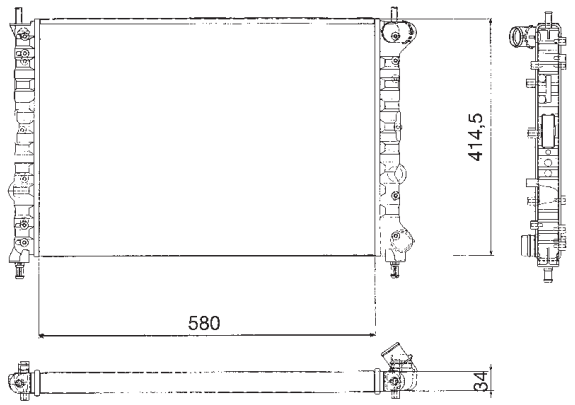


| | | |
|---|---|---|
| LANCIA 46544775 | 580x414,5x34 | 35mm L |
| | | 35mm QC |

## 732587 ALB

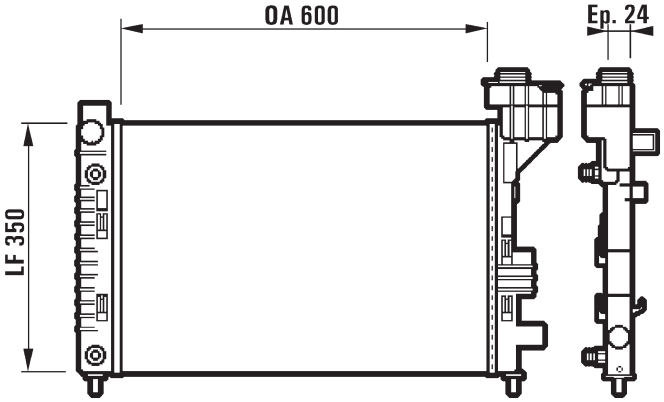


| | | |
|---|---|---|
| MERCEDES 1685000602 | 600x350x24 | 32mm L |
| | | 32mm L |

## 732582 RA1191 ALB

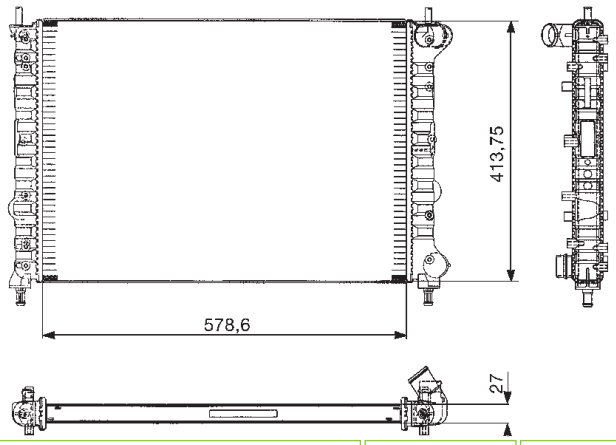


| | | |
|---|---|---|
| LANCIA 46544780 | 578,6x413,7x27 | 35mm L |
| | | 35mm QC |

## 732588 ALB

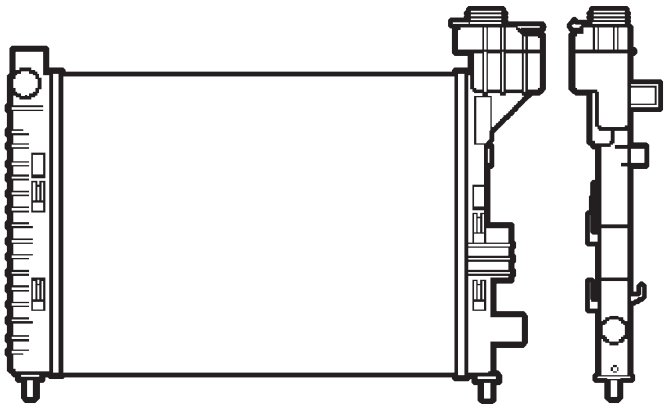

| | | |
|---|---|---|
| MERCEDES 1685000002 | 400x375x26 | 32mm L |
| | | 32mm L |

## 732584 ALB

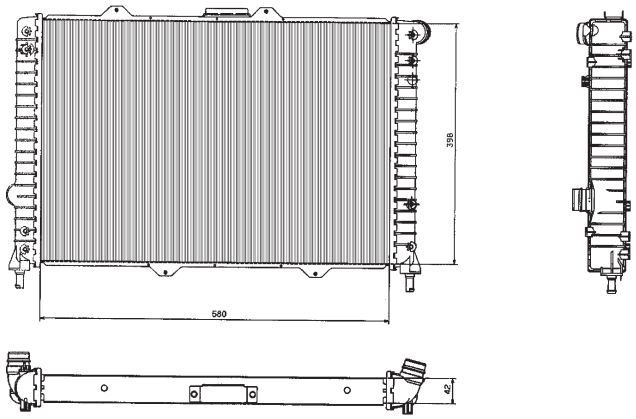


| | | |
|---|---|---|
| LANCIA 46753255 | 580x398x42 | 35mm QC |
| | | 35mm QC |

## 732589 ALB

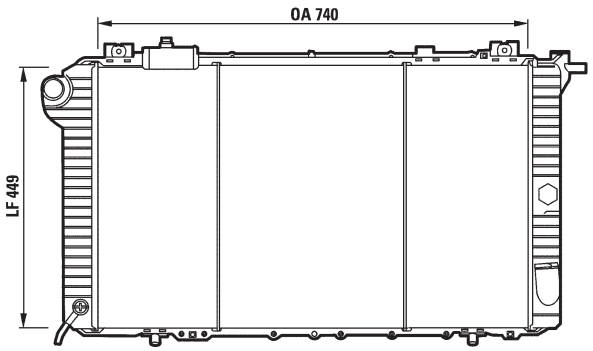


| | | |
|---|---|---|
| NISSAN 21400G9806 | 740x449x40 | L |
| | | L |

## 732591 ALB

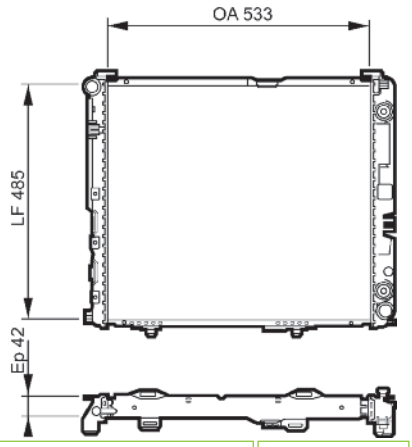


| | | |
|---|---|---|
| MERCEDES 1245002002 | 533x485x42 | 35mm L |
| + | | 35mm L |

## 732596 CBS

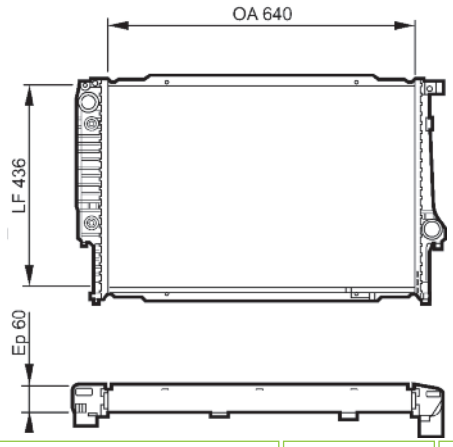


| | | |
|---|---|---|
| NISSAN 21400C8200 | 640x436x60 | L |
| - | | L |

## 732592 ALB

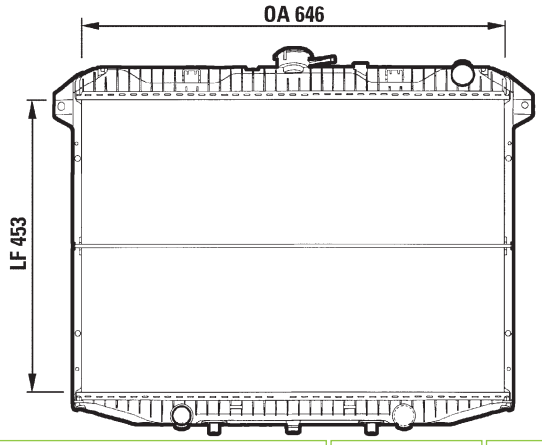


| | | |
|---|---|---|
| FORD 1953239<br>NISSAN 214100F121 | 453x646x40 | L |
| - | | L |

## 732598 RA1197 ALB

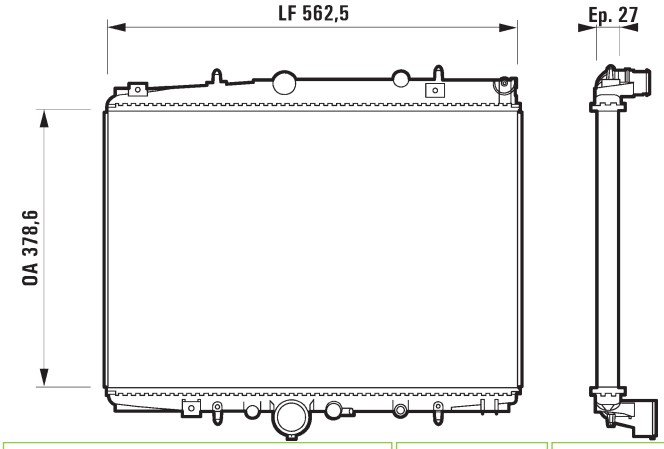


| | | |
|---|---|---|
| CITROEN 1331FT<br>PEUGEOT 1331FT | 379x562,5x27 | 32mm L |
| - | | 42mm QC |

## 732593 RAB018 ALB

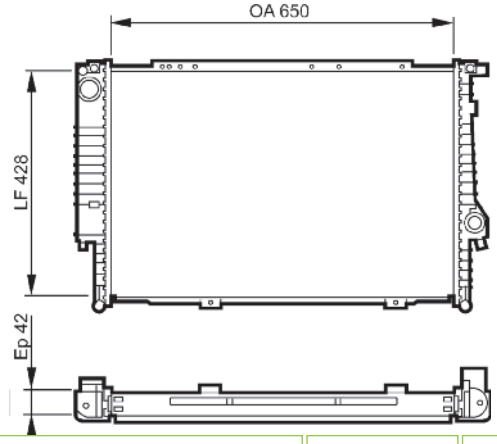


| | | |
|---|---|---|
| BMW 17112244542 | 650x428x42 | 40mm L |
| - | | 40mm L |

## 732599 RA1117 ALB

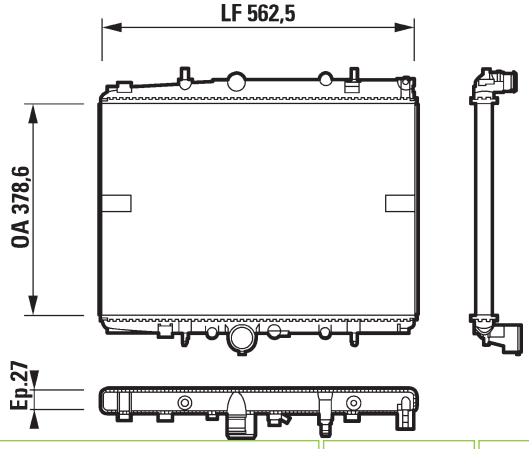


| | | |
|---|---|---|
| PEUGEOT 1331EE | 378,6x562,5x27 | 32mm L |
| - | | 42mm QC |

## 732600 RA1198 ALB

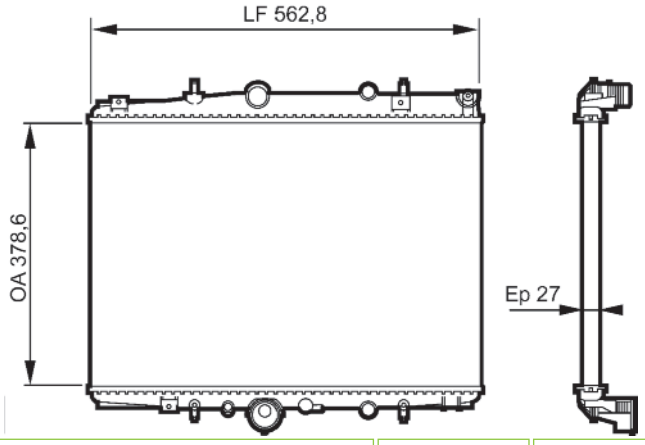


| | | |
|---|---|---|
| CITROEN 133091 | 379x562,5x27 | 32mm L |
| | - | 32mm L |

## 732608 CBS

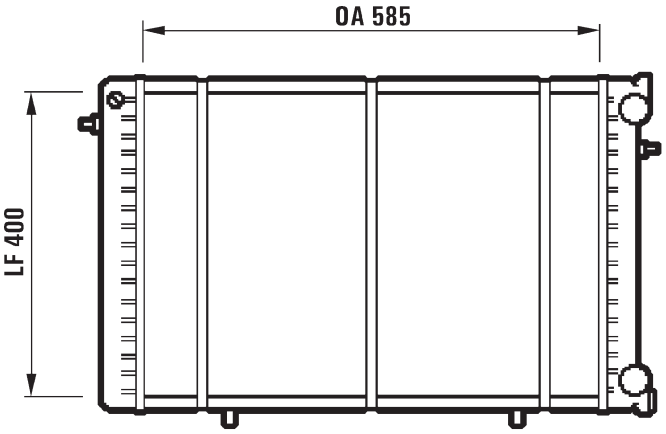


| | | |
|---|---|---|
| RENAULT 6006004494 | 585x400x45 | 32mm L |
| | - | 32mm L |

## 732606 ALB

732606

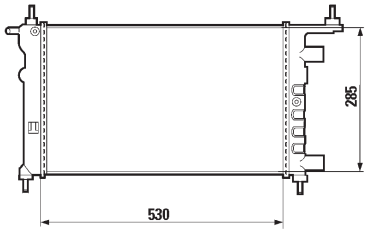


| | | |
|---|---|---|
| OPEL 1300173<br>VAUXHALL 90531547 | 530x285x26 | 34mm L |
| | - | 34mm L |

## 732612 ALB

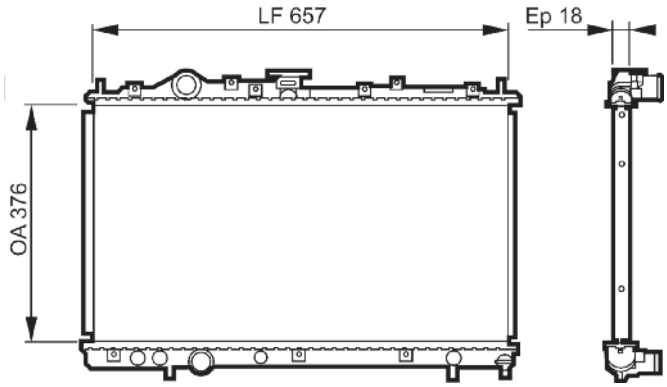


| | | |
|---|---|---|
| MITSUBISHI MR299618 | 376x657x18 | 35mm L |
| | - | 35mm L |

## 732607 ALM

732607

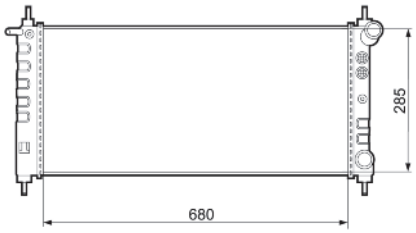


| | | |
|---|---|---|
| OPEL 1300205<br>VAUXHALL 9180595 | 680x285x26 | 34mm L |
| | - | 34mm L |

## 732613 ALB

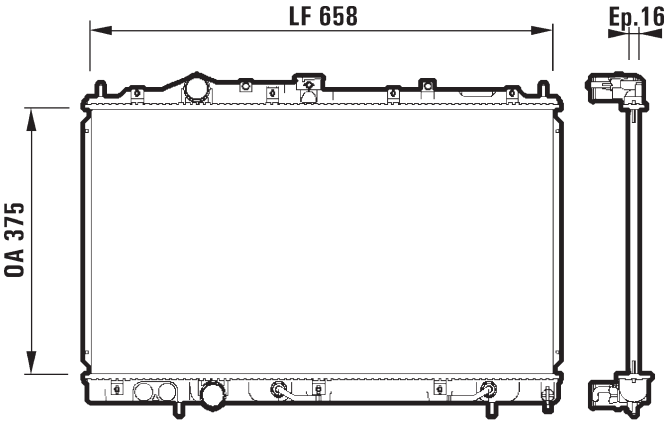


| | | |
|---|---|---|
| MITSUBISHI MR299619 | 375x658x16 | 35mm L |
| | + | 35mm L |

## 732614 ALB

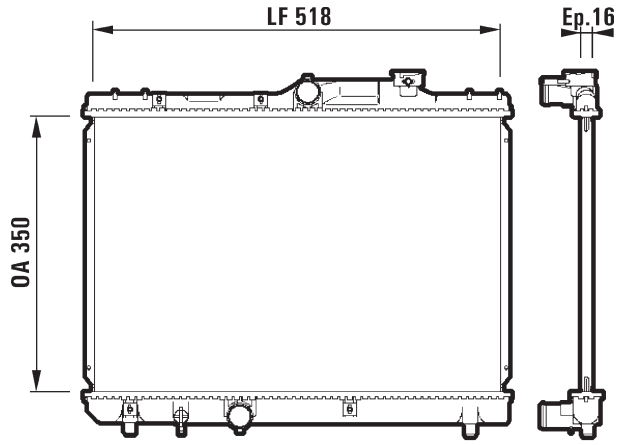


| | | |
|---|---|---|
| TOYOTA 1640016790 | 350x518x16 | |
| + | | 31mm L |

## 732620 RA1119 ALB

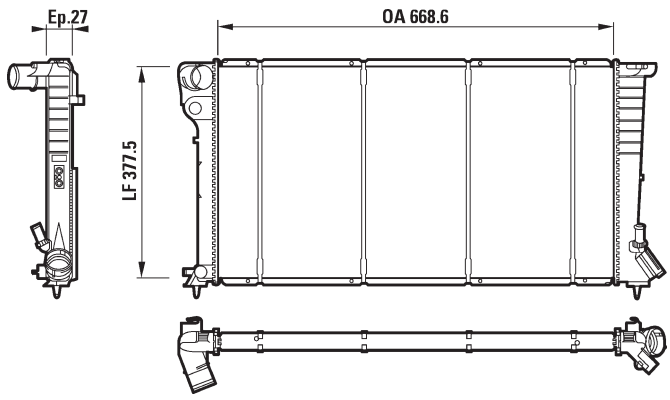


| | | |
|---|---|---|
| CITROEN 133058<br>PEUGEOT 133058 | 668,8x377,5x27 | 40mm L |
| - | | 40mm QC |

## 732617 RA1108 ALB

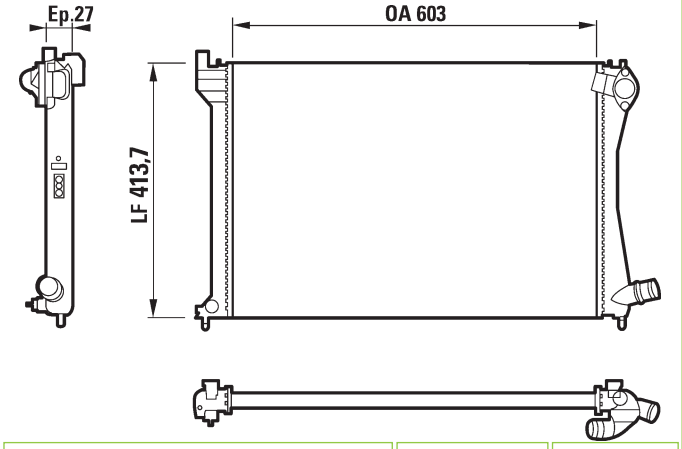


| | | |
|---|---|---|
| CITROEN 133070 | 603x413,7x27 | 32mm L |
| - | | 32mm L |

## 732621 RM1128 ALM

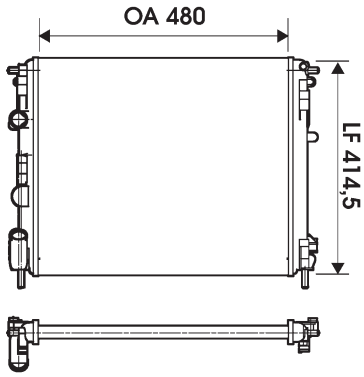


| | | |
|---|---|---|
| DACIA 7700428082<br>NISSAN 2140000QAX<br>RENAULT 7700428082 | 480x414,5x23 | 32mm L |
| - | | 32mm L |

## 732618 RA1106 ALB

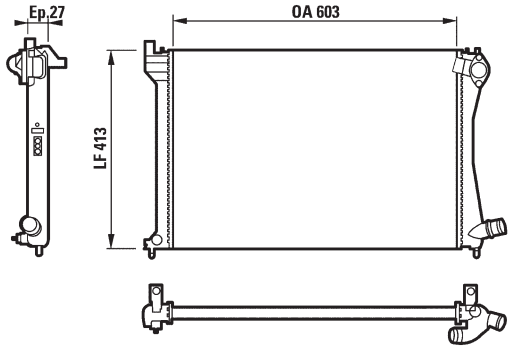


| | | |
|---|---|---|
| CITROEN 133043 | 603x413,7x27 | 32mm L |
| - | | 32mm L |

## 732623 RC156 CBS

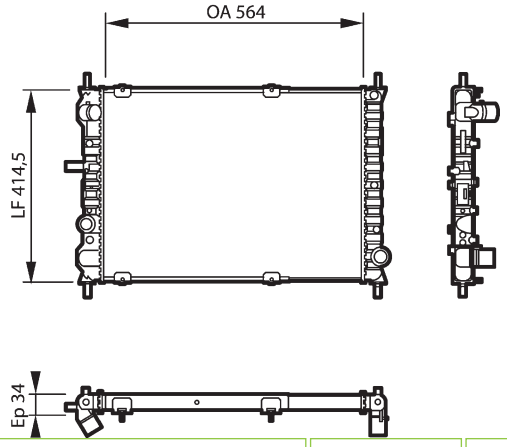


| | | |
|---|---|---|
| FIAT 46547089 | 554x414,5x34 | 35mm L |
| - | | 35mm L |

## 732625 ALB

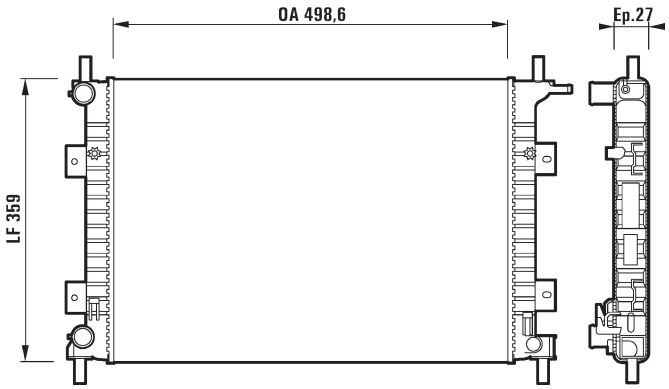


| | | |
|---|---|---|
| FORD 1092370 | 498,6x359x27 | |
| | | L |

## 732687 RM1428 ALM

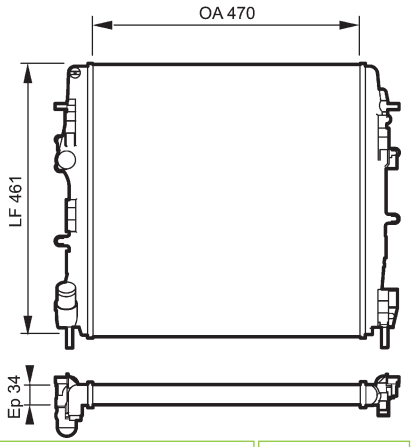


| | | |
|---|---|---|
| RENAULT 8200240818 | 461x470x34 | 32mm L |
| | | 32mm L |

## 732626 6TA100A ALM

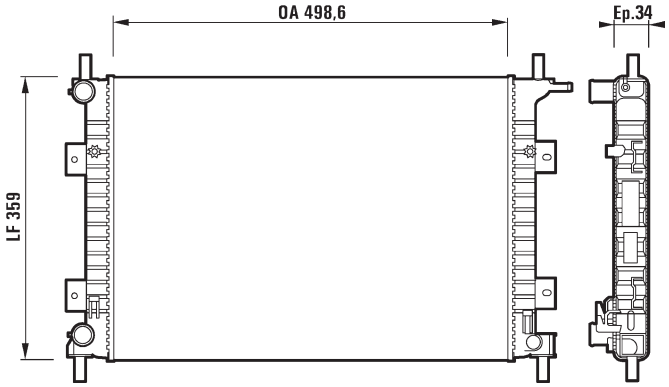


| | | |
|---|---|---|
| FORD 1092360 | 500x359x23 | |
| | | L |

## 732692 RA1298 ALB

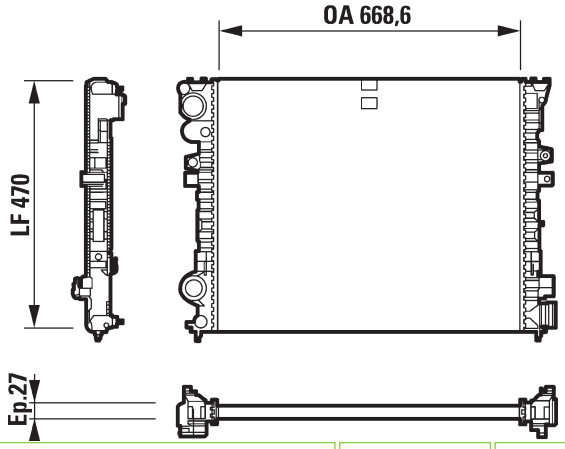


| | | |
|---|---|---|
| CITROEN 1330E3<br>FIAT 1489463080<br>LANCIA 1482543080<br>PEUGEOT 1330E3 | 669x470x27 | 42mm QC |
| | | 42mm QC |

## 732685 RM2024 ALM

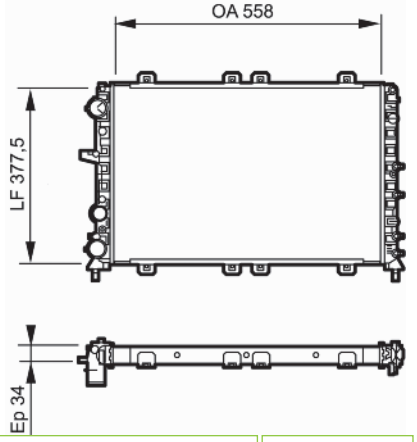


| | | |
|---|---|---|
| FIAT 50010242 | 558x377,5x34 | 35mm L |
| | | 35mm L |

## 732694 RA1044 ALB

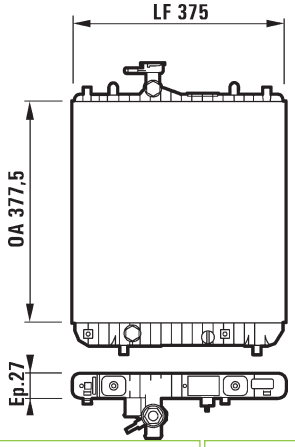


| | | |
|---|---|---|
| OPEL 1300220<br>VAUXHALL 9208632 | 375x377,5x27 | 28mm L |
| | | 28mm L |

## 732696 RA2038 ALB

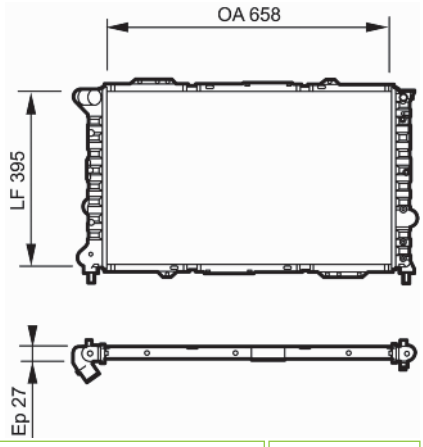


| | | |
|---|---|---|
| ALFA ROMEO 60690408 | 658x395x27 | 35mm L |
| - | | 35mm L |

## 732705 RM213 ALM

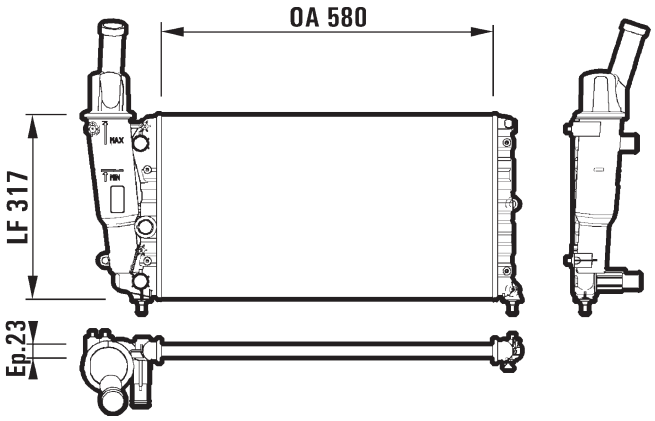


| | | |
|---|---|---|
| FIAT 46407450 | 580x317x23 | 28mm L |
| - | | 28mm L |

## 732698 RM1151 ALM

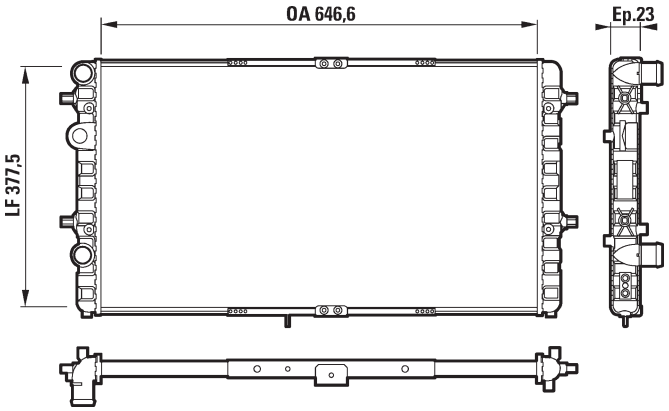


| | | |
|---|---|---|
| SEAT 6K0121253AG | 647x377x23 | |
| - | | L |

## 732706 ALB

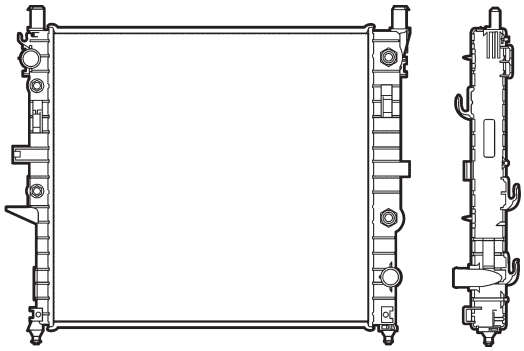

| | | |
|---|---|---|
| MERCEDES 1635000303 | 610x544x40 | 36mm L |
| + | | 36mm L |

## 732704 ALB

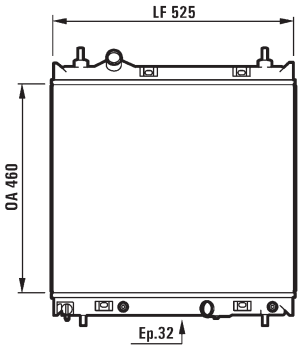


| | | |
|---|---|---|
| CHRYSLER 5017404AB | 460x525x32 | 32mm L |
| + | | 34mm L |

## 732710 RM1159 ALM

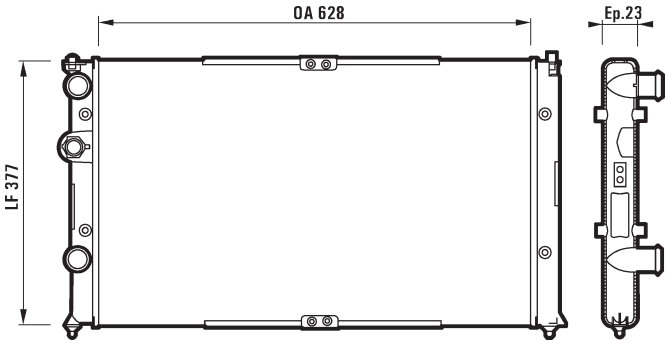


| | | |
|---|---|---|
| SEAT 6K0121253AS<br>VOLKSWAGEN 6K0121253AS | 628x377,5x23 | |
| - | | L |

## 732713 ALB

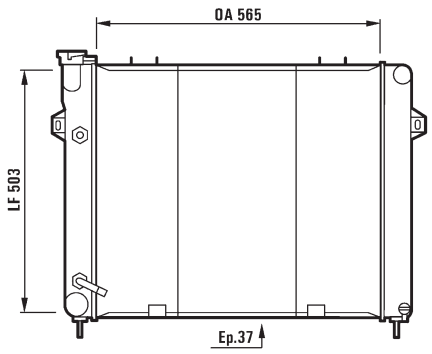


| | | |
|---|---|---|
| JEEP 52028379 | 565x503x37 | L |
| | + | L |

## 732719 RA1037 ALB

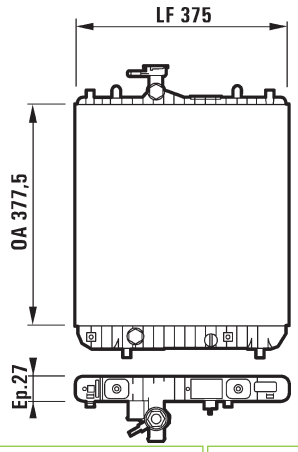


| | | |
|---|---|---|
| SUZUKI 1770083E00 | 375x377,5x27 | 28mm L |
| | - | 28mm L |

## 732717 RA1292 ALM

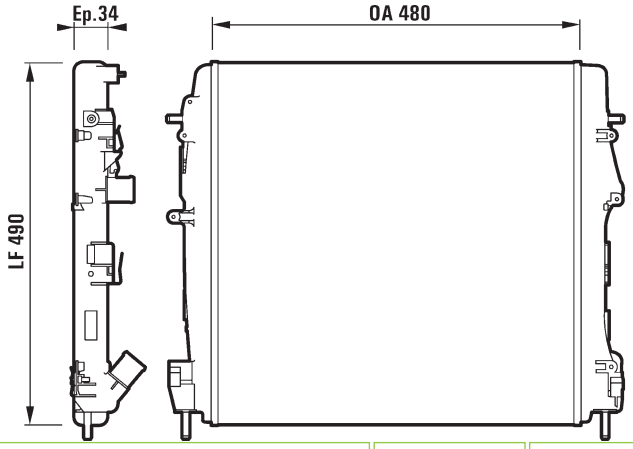


| | | |
|---|---|---|
| NISSAN 2140000QAA<br>RENAULT 8200072713 | 460x470x27 | 32mm L |
| | - | 32mm L |

## 732720 RM1224 ALM

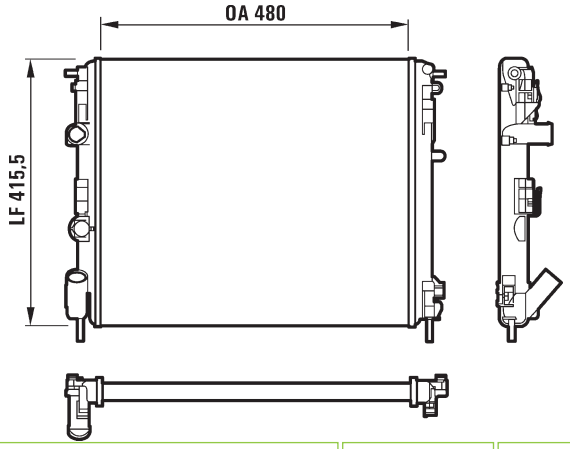


| | | |
|---|---|---|
| RENAULT 7700428658 | 480x414,5x28 | |
| | - | L |

## 732718 RM1473 ALM

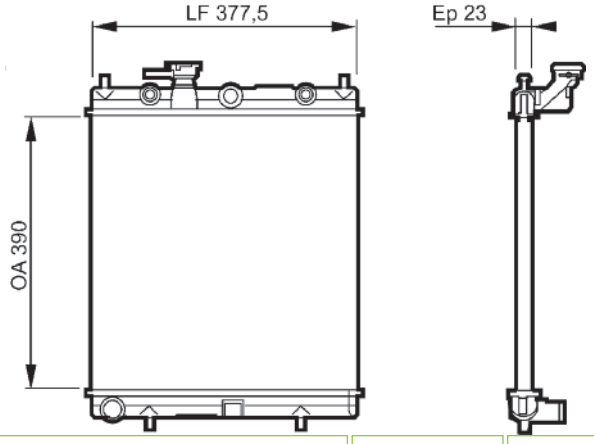


| | | |
|---|---|---|
| NISSAN 214106F600 | 390x377,5x23 | 28mm L |
| | - | 28mm L |

## 732721 RM1444 ALM

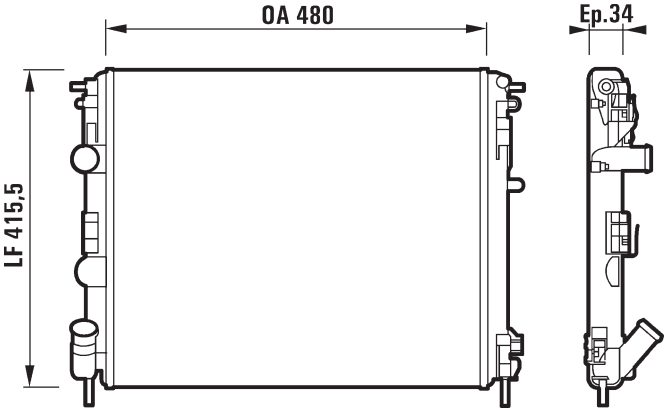


| | | |
|---|---|---|
| DACIA 8200343476<br>RENAULT 8200343476 | 480x414,5x34 | 32mm L |
| | - | 32mm L |

## 732722 ALB

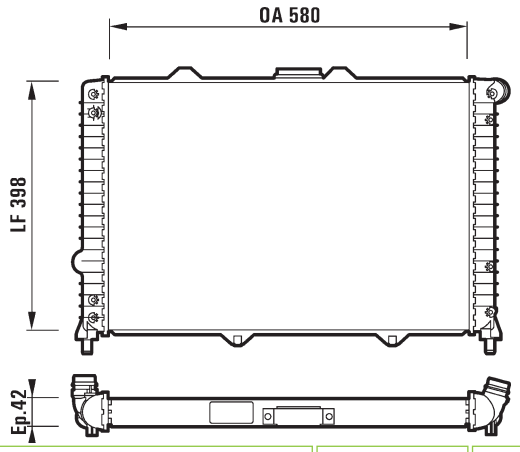


| | | |
|---|---|---|
| ALFA ROMEO 60690283 | 580x398x42 | 35mm L |
| | | 35mm L |

## 732726 ALB

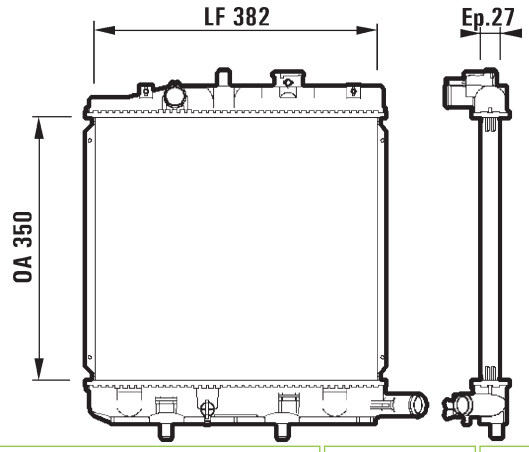


| | | |
|---|---|---|
| MAZDA B5C715200A | 350x382x27 | 28mm L |
| | | 28mm L |

## 732723 RM1177 ALM

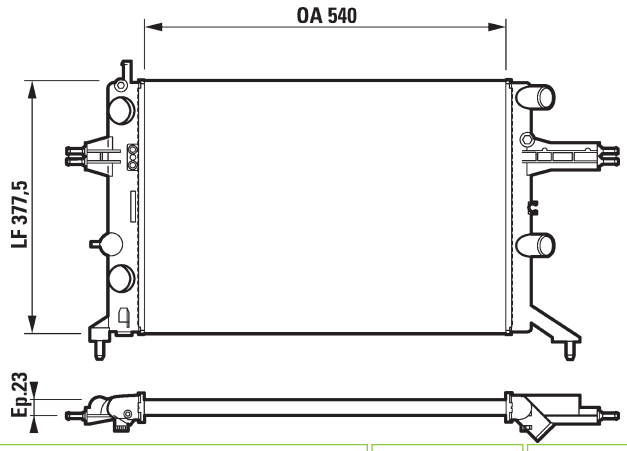


| | | |
|---|---|---|
| OPEL 1300211<br>VAUXHALL 90570723 | 540x377,5x23 | 34mm L |
| | | 34mm L |

## 732729 RM1336 ALM

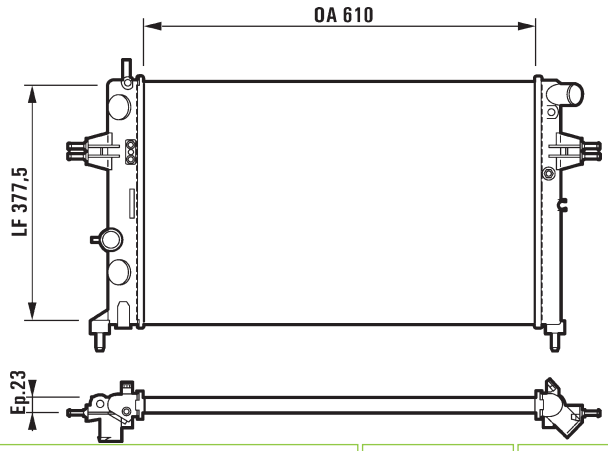


| | | |
|---|---|---|
| OPEL OPELRAR003<br>VAUXHALL 9193265 | 610x377,5x23 | 34mm L |
| | | 34mm L |

## 732724 RM1178 ALM

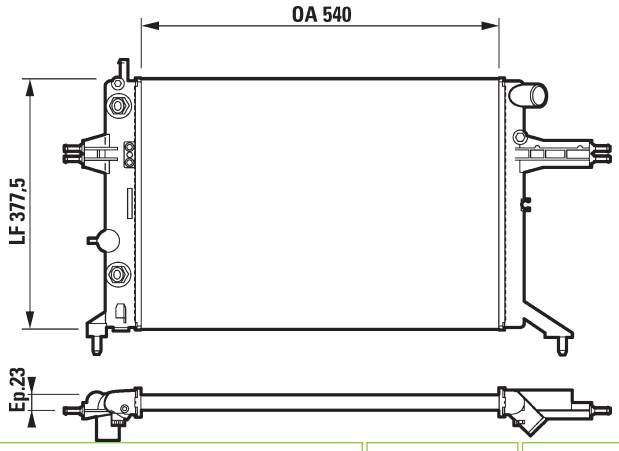


| | | |
|---|---|---|
| OPEL 90570725<br>VAUXHALL 90570726 | 540x377,5x23 | 35mm L |
| | | 35mm L |

## 732730 RA1199 ALB

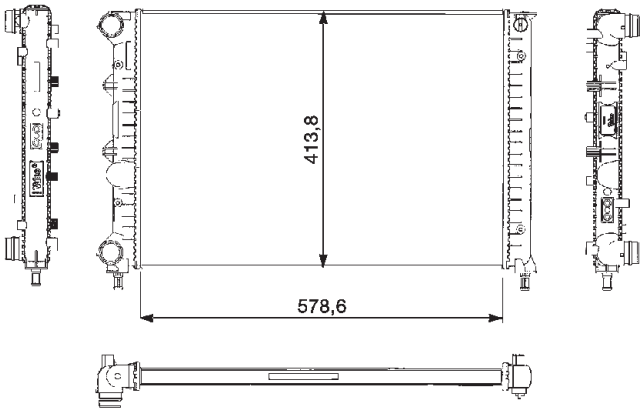


| | | |
|---|---|---|
| ALFA ROMEO 46743394 | 578,6x413,75x26 | 35mm QC |
| | | 35mm QC |

## 732731 RM1338 ALM

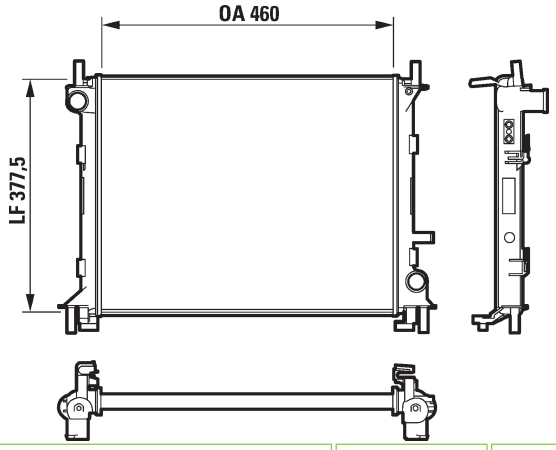


| | | |
|---|---|---|
| FORD 1132658 | 460x377,5x23 | 34mm L |
| | - | 34mm L |

## 732736 ALB

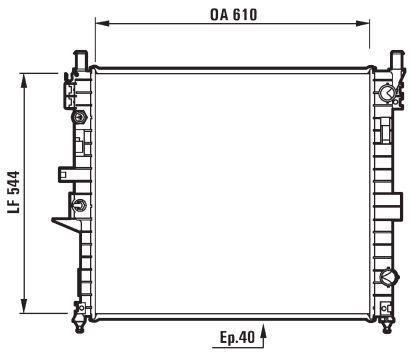


| | | |
|---|---|---|
| MERCEDES 1635000103 | 610x544x40 | 36mm L |
| | + | 36mm L |

## 732732 RM1339 ALM

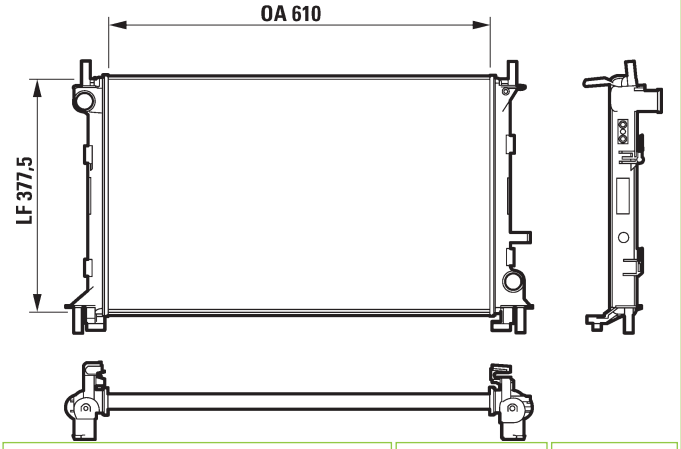


| | | |
|---|---|---|
| FORD 1132655 | 610x377,5x23 | 34mm L |
| | - | 34mm L |

## 732737 RA1287 ALB

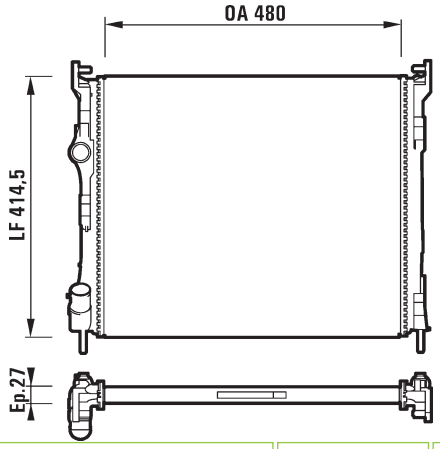


| | | |
|---|---|---|
| RENAULT 7700436916 | 480x414,7x27 | 32mm L |
| | - | 32mm L |

## 732735 RC1157 ALM

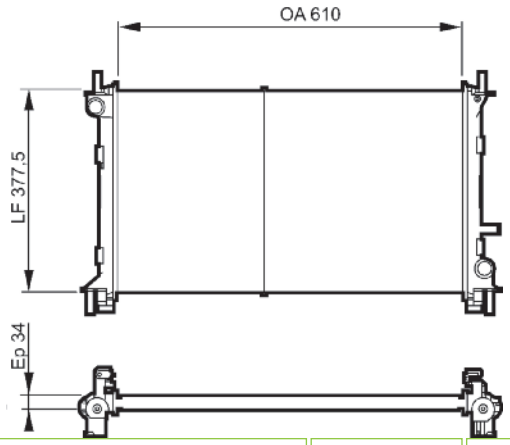


| | | |
|---|---|---|
| FORD 1091934 | 610x377,5x34 | 33mm L |
| | - | 33mm L |

## 732740 RA1299 ALB

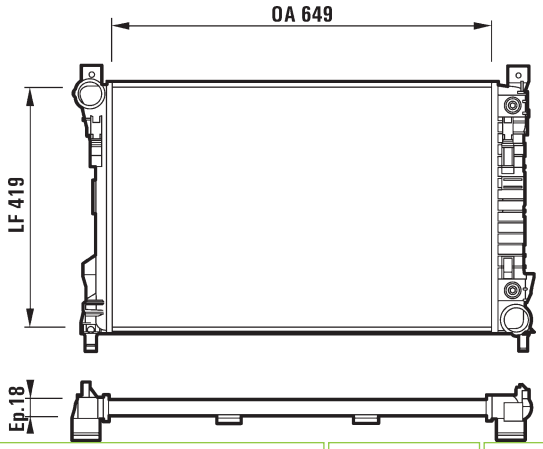


| | | |
|---|---|---|
| MERCEDES 2035001103 | 649,4x414x27 | |
| | - | |

## 732741 RA1035 ALB

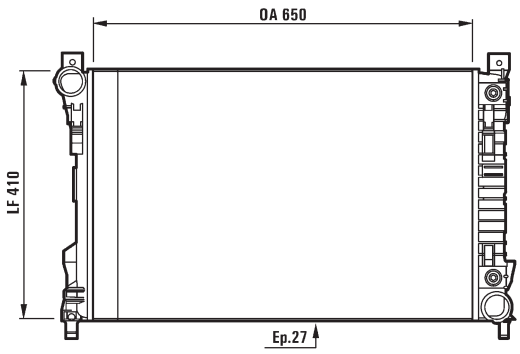


| | | |
|---|---|---|
| MERCEDES 2035001003 | 649,4x414x27 | 44mm QC |
| - | | 44mm QC |

## 732748 CBS

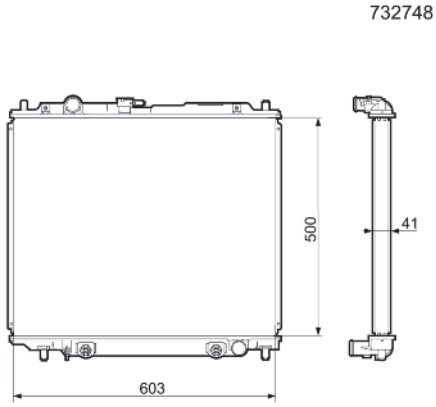


| | | |
|---|---|---|
| MITSUBISHI MB890957 | 500x603x41 | 35mm L |
| + | | 35mm L |

## 732742 RA1322 ALB

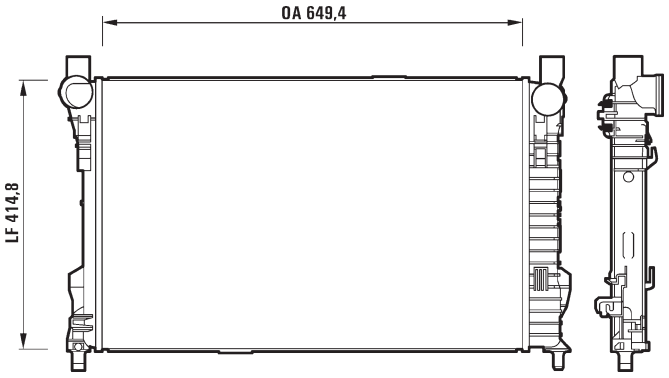


| | | |
|---|---|---|
| MERCEDES 2035000803 | 649x414x34 | 44mm QC |
| + | | 44mm QC |

## 732750 CBS

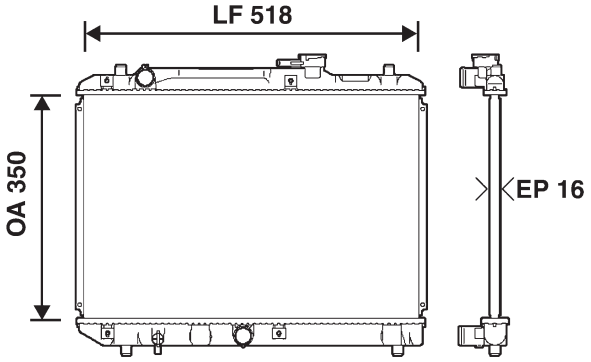


| | | |
|---|---|---|
| SUZUKI 1770060G01 | 350x526x16 | 28mm L |
| - | | 28mm L |

## 732743 RA1415 ALB

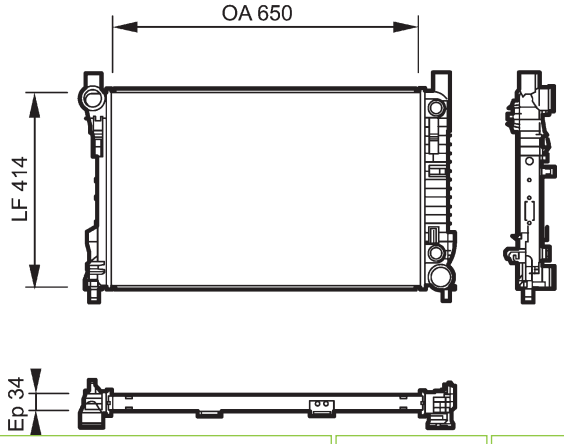


| | | |
|---|---|---|
| MERCEDES 2035003903 | 649,4x414,5x34 | 44mm QC |
| + | | 44mm QC |

## 732753 ALB

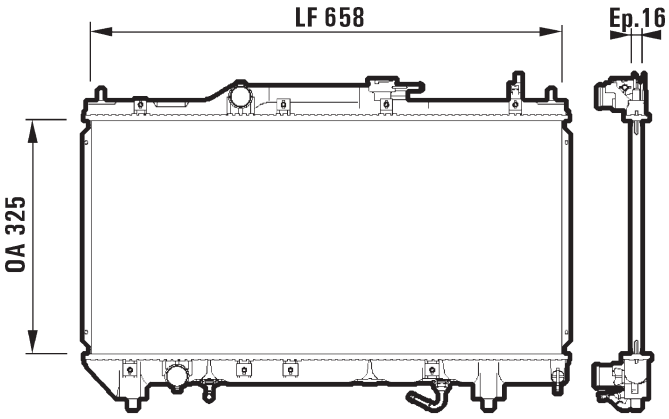


| | | |
|---|---|---|
| TOYOTA 1640002280 | 325x658x16 | 31mm L |
| + | | 31mm L |

## 732754 ALB

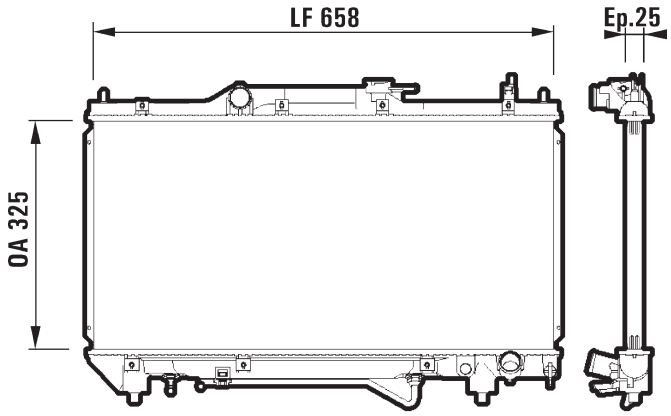


| | | |
|---|---|---|
| TOYOTA 1640003190 | 325x658x25 | 31mm L |
| | + | 31mm L |

## 732765 3TA118A ALM

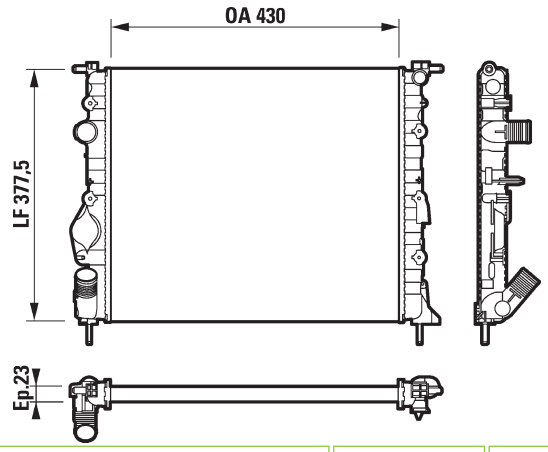


| | | |
|---|---|---|
| RENAULT 8200049077 | 430x377,5x23 | L |
| | - | L |

## 732759 RM1173 ALM

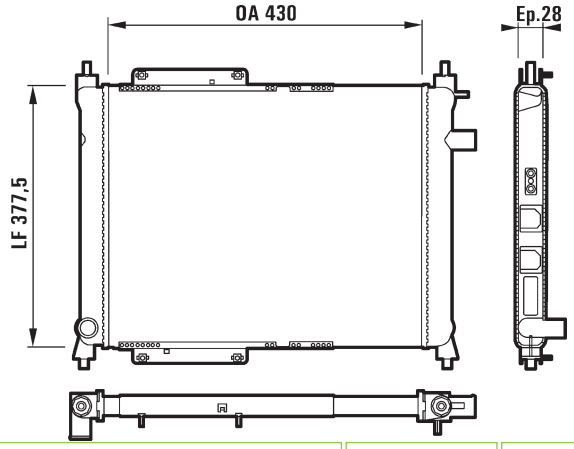


| | | |
|---|---|---|
| ROVER GRD162 | 430x377,5x28 | 28mm L |
| | - | 28mm L |

## 732780 CBS

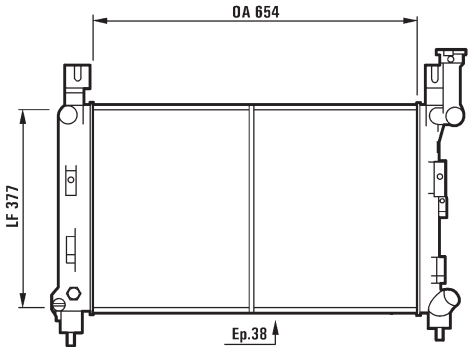


| | | |
|---|---|---|
| CHRYSLER 4644266 | 654x377x38 | 33mm L |
| | + | 40mm L |

## 732761 RM1231 ALM

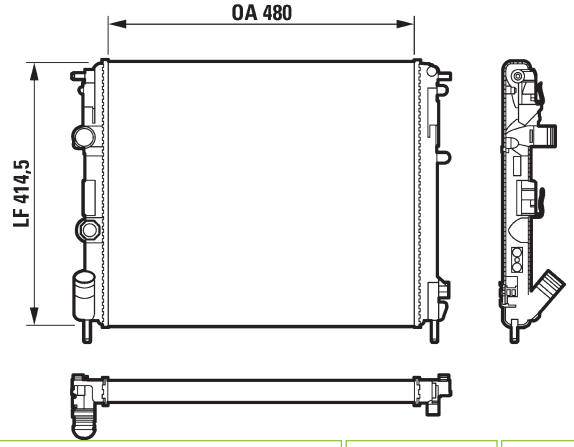


| | | |
|---|---|---|
| RENAULT 8200049080 | 480x414,5x34 | 32mm L |
| | - | 32mm L |

## 732782 CBS

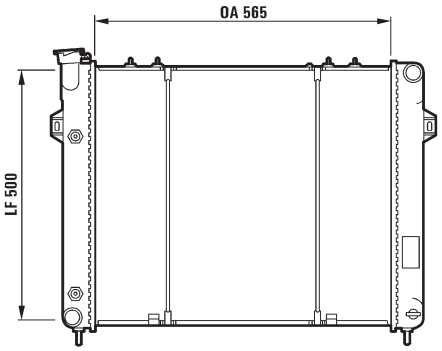


| | | |
|---|---|---|
| JEEP 52079597AB | 565x503x37 | L |
| | + | L |

## 732785 RA1036 ALB

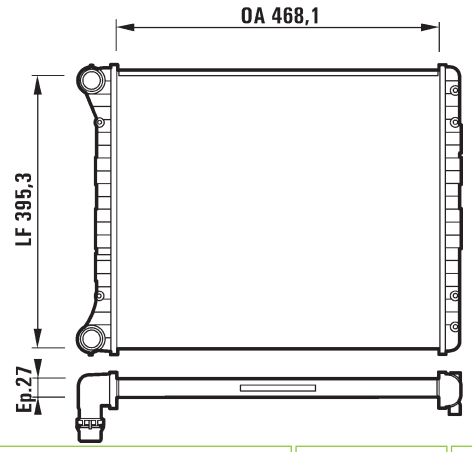


| | | |
|---|---|---|
| AUDI 8Z0121251D | 468x395,3x27 | 32mm QC |
| | | 32mm QC |

## 732788 RM190 ALM

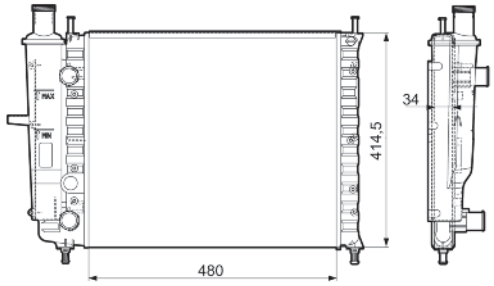


| | | |
|---|---|---|
| FIAT 46534995 | 480x414,5x34 | 35mm L |
| | | 35mm L |

## 732786 RA1170 ALB

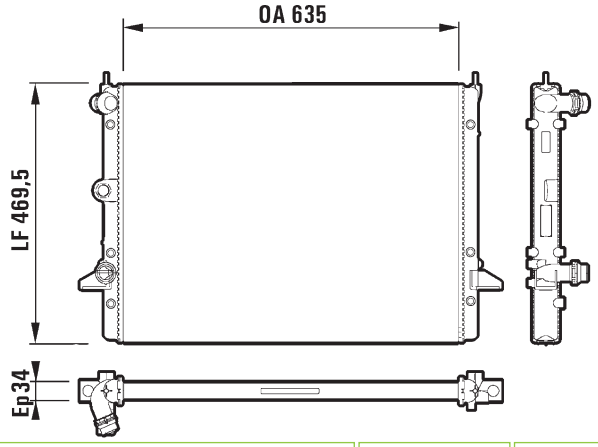


| | | |
|---|---|---|
| FORD 1108999<br>SEAT 7M3121253A<br>VOLKSWAGEN 7M3121253A | 635x469,5x34 | 32mm QC |
| | | 32mm QC |

## 732789 RM209 ALM

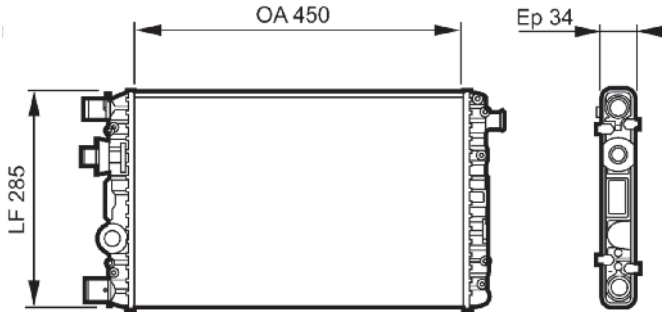


| | | |
|---|---|---|
| FIAT 46558704 | 450x285x34 | 30mm L |
| | | 30mm L |

## 732787 RC140 CBS

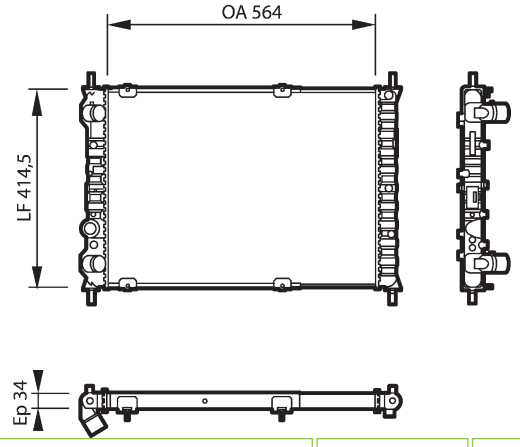


| | | |
|---|---|---|
| FIAT 46518233 | 554x414,5x34 | 35mm L |
| | | 35mm L |

## 732790 RA1168 ALB

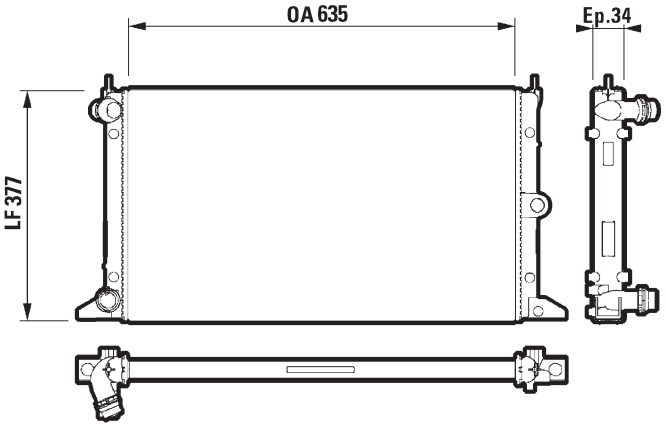


| | | |
|---|---|---|
| FORD 1109113<br>SEAT 7M3121253B<br>VOLKSWAGEN 7M3121253B | 635x377x34 | 32mm QC |
| | | 32mm QC |

## 732791 RA1169 ALB

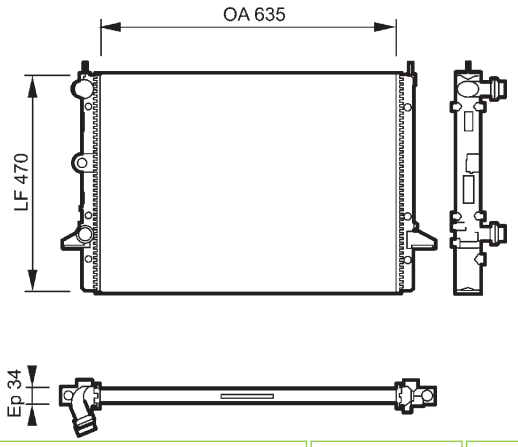


| | | |
|---|---|---|
| FORD 1109232 | 635x470x34 | 32mm QC |
| | | 32mm QC |

## 732795 RM1343 ALM

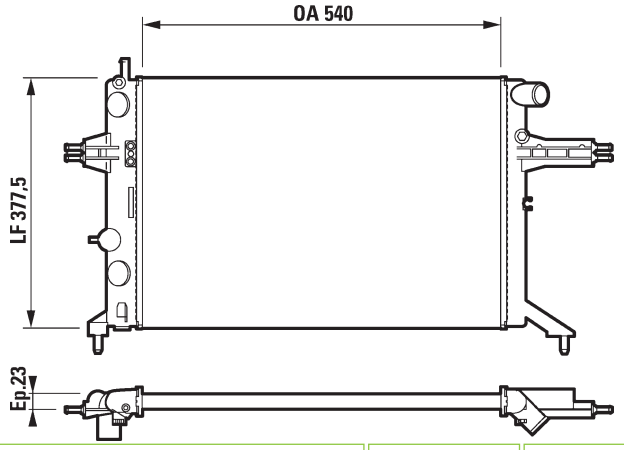


| | | |
|---|---|---|
| OPEL 93277988<br>VAUXHALL VAUXRAR001 | 540x377,5x23 | 34mm L |
| | | 34mm L |

## 732792 RM214 ALM

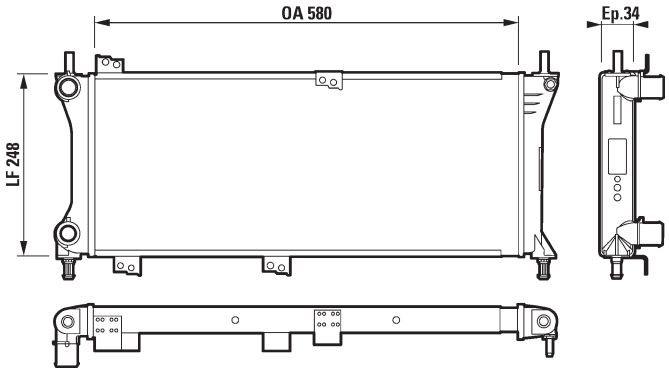


| | | |
|---|---|---|
| FIAT 46777410 | 580x248x34 | 30mm L |
| | | 30mm L |

## 732797 RM1193 ALM

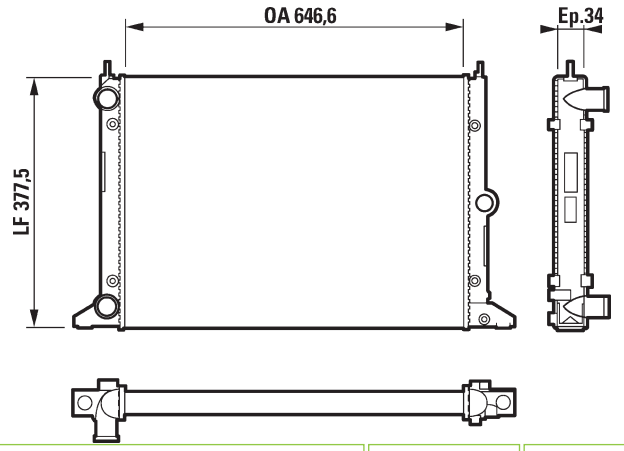


| | | |
|---|---|---|
| SEAT 7M0121253K<br>VOLKSWAGEN 7M0121253K | 646,6x377,5x34 | 32mm L |
| | | 32mm L |

## 732794 RM1255 ALM

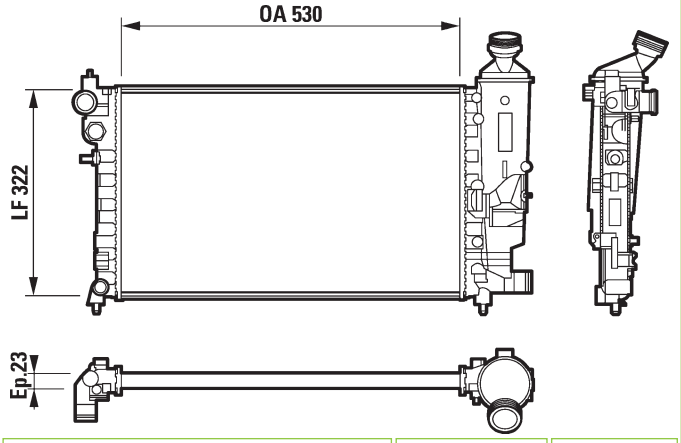


| | | |
|---|---|---|
| PEUGEOT 133087 | 530x322x23 | 32mm L |
| | | 32mm L |

## 732798 RA1200 ALB

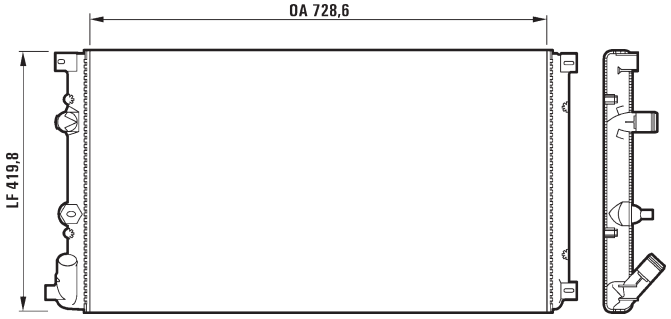


| | | |
|---|---|---|
| OPEL 4403216<br>RENAULT 7701049664<br>VAUXHALL 9111216 | 728x414,5x27 | 32mm L |
| | | 32mm L |

## 732807 RM1371 ALM

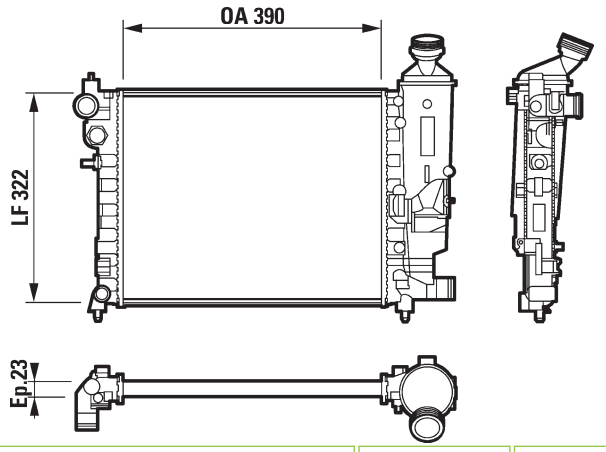


| | | |
|---|---|---|
| CITROEN 1330A6 | 390x322x23 | 32mm L |
| | | 32mm L |

## 732817 RM1430 ALM

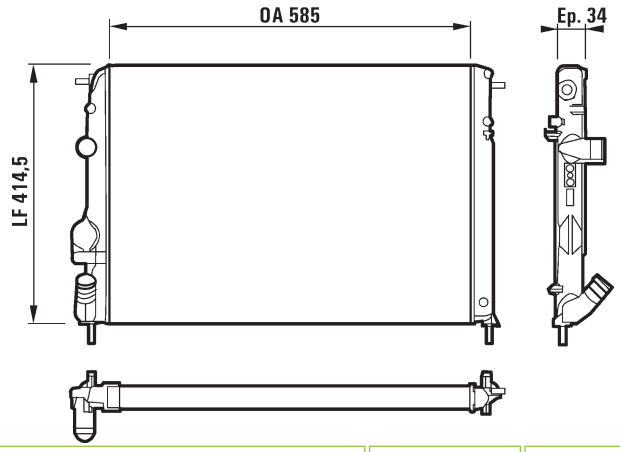


| | | |
|---|---|---|
| DACIA 8200189288<br>RENAULT 8200189288 | 585x414,5x34 | 32mm L |
| | | 32mm L |

## 732811 RM1264 ALM

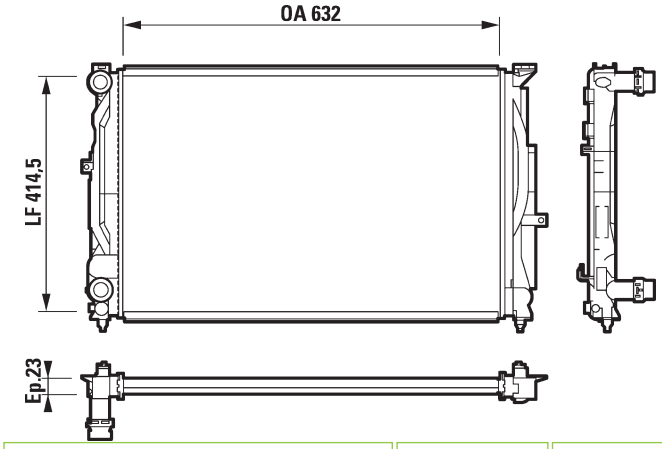


| | | |
|---|---|---|
| AUDI 8D0121251BA | 632x414,5x23 | 32mm QC |
| | | 32mm QC |

## 732819 CBS

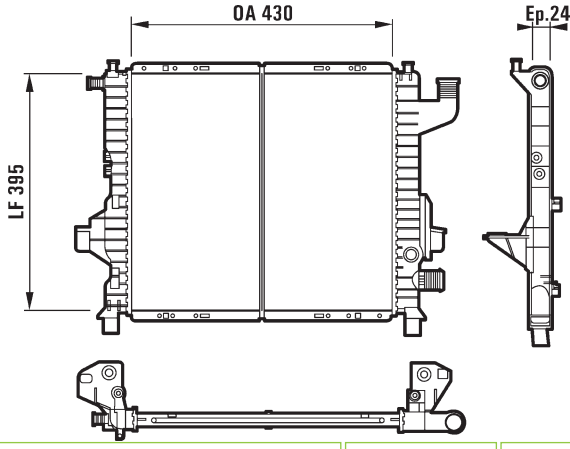


| | | |
|---|---|---|
| RENAULT 7701045211 | 430x395x24 | 32mm L |
| | | 32mm L |

## 732812 RM172 ALM

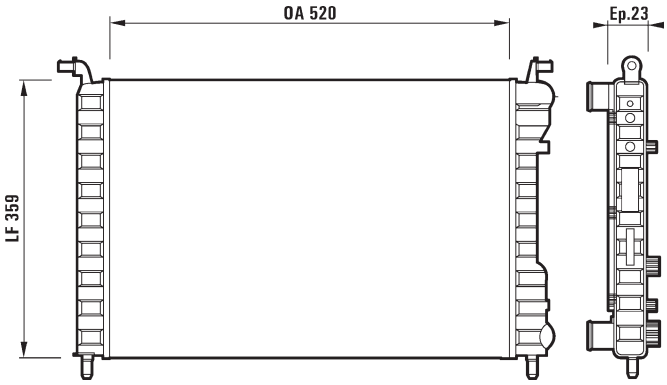


| | | |
|---|---|---|
| FIAT 46750717 | 520x359x23 | L |
| | | L |

## 732824 RM1361 ALM

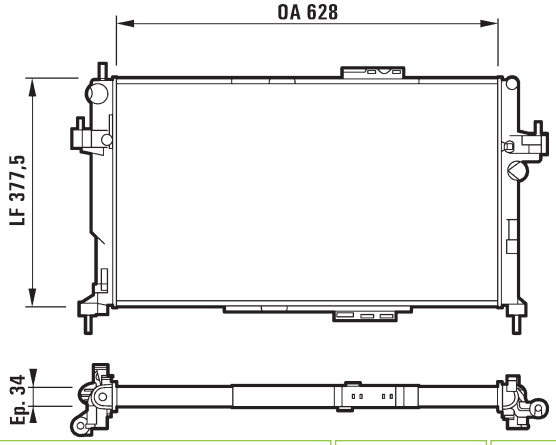


| | | |
|---|---|---|
| OPEL 1300233<br>VAUXHALL 9196694 | 628x377,5x34 | 34mm L |
| | | 34mm L |

## 732825 RM1357 ALM

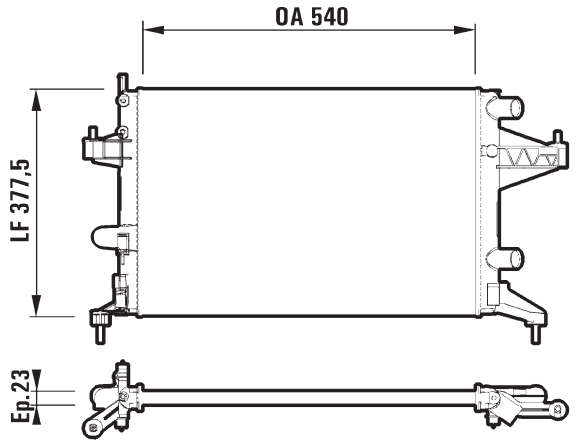


| | | |
|---|---|---|
| OPEL 1300236<br>VAUXHALL 9201955 | 540x377,5x23 | 34mm L |
| | - | 34mm L |

## 732826 RM1358 ALM

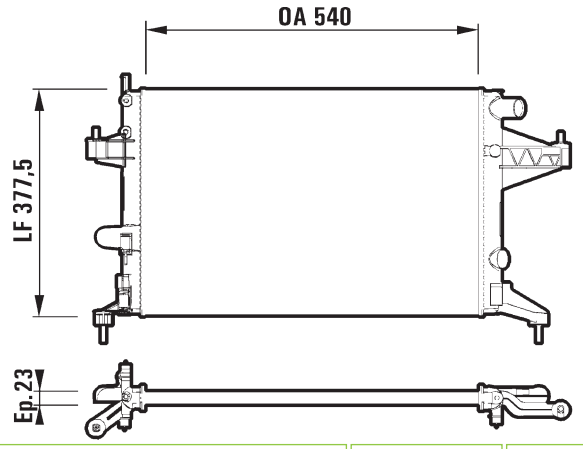


| | | |
|---|---|---|
| OPEL 1300237<br>VAUXHALL 9201956 | 540x377,5x23 | 34mm L |
| | - | 34mm L |

## 732827 RM1365 ALM

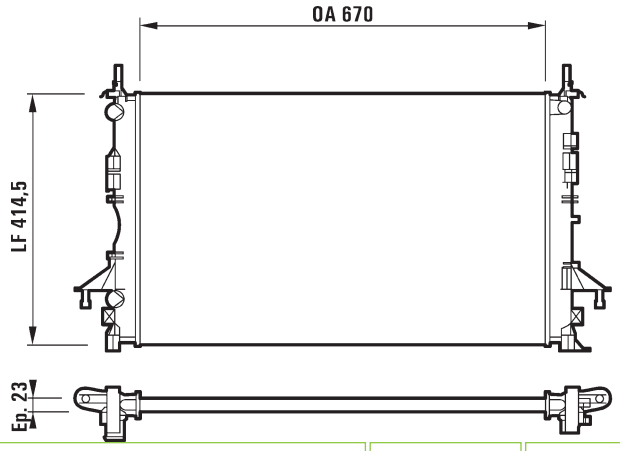


| | | |
|---|---|---|
| RENAULT 8200008764 | 670x414,5x23 | 32mm L |
| | - | 32mm L |

## 732828 RM1471 ALM

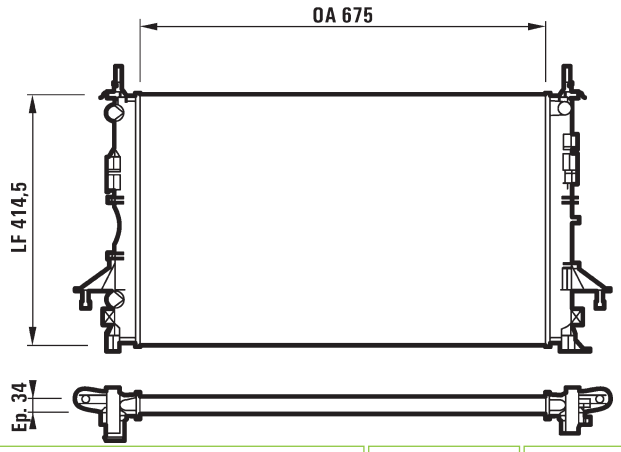


| | | |
|---|---|---|
| RENAULT 8200302463 | 675x414,5x34 | 32mm L |
| | - | 32mm L |

## 732830 RM1250 ALM

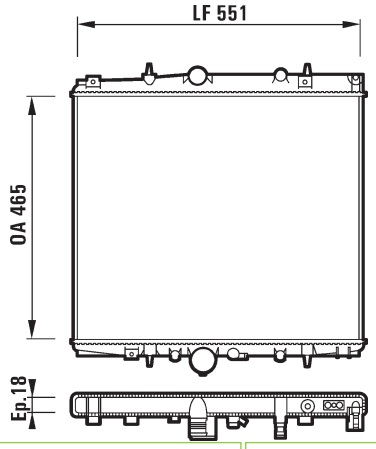


| | | |
|---|---|---|
| CITROEN 1330A4<br>FIAT 9641728080<br>LANCIA 9641728080<br>PEUGEOT 1330A4 | 465x551,3x18 | 32mm L |
| | - | 42mm QC |

## 732831 RM1253 ALM

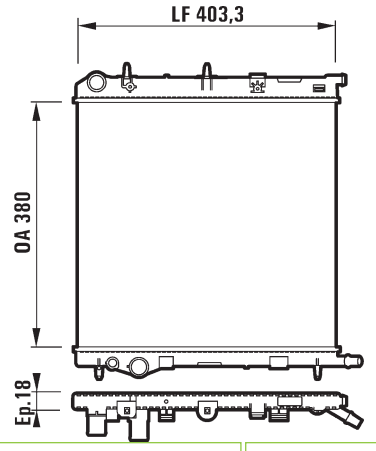


| | | |
|---|---|---|
| CITROEN 1330C2<br>PEUGEOT 1330C2 | 380x403,3x18 | 28mm L |
| | - | 28mm L |

## 732839 RM1068 ALM

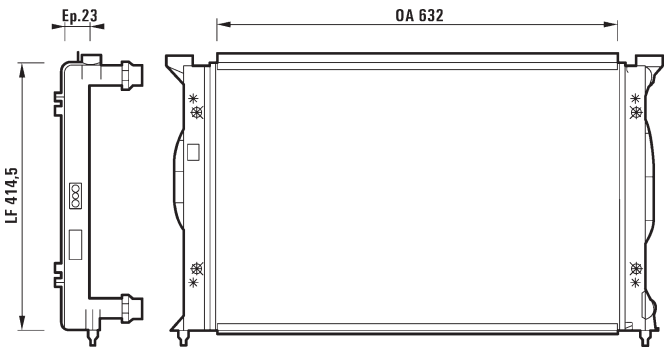


| | | |
|---|---|---|
| AUDI 8E0121251 | 632x414,5x23 | |
| | | 32mm QC |

## 732849 RA1041 ALB

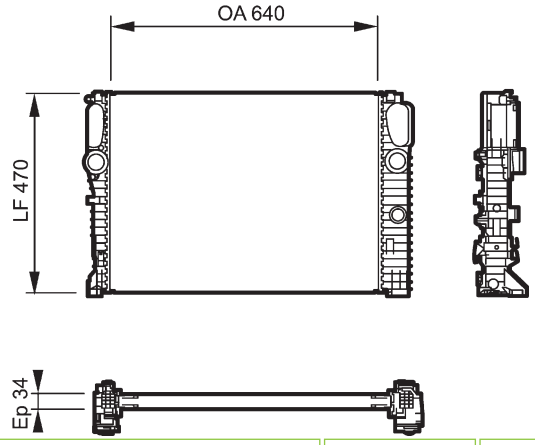


| | | |
|---|---|---|
| MERCEDES 2115003402 | 640x470x34 | |

## 732845 RM1196 ALM

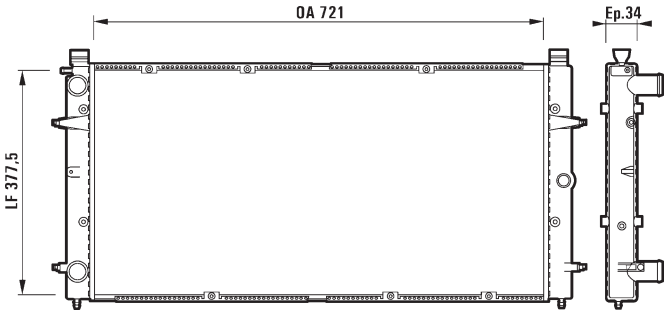


| | | |
|---|---|---|
| VOLKSWAGEN 701121253M | 721x377,5x34 | 32mm L |
| | | 32mm L |

## 732851 RM216 ALM

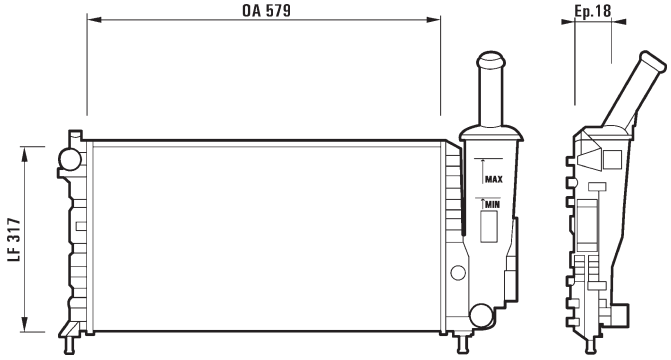


| | | |
|---|---|---|
| FIAT 46827082 | 579x317x18 | 30mm L |
| | | 30mm L |

## 732846 RA1127 ALB

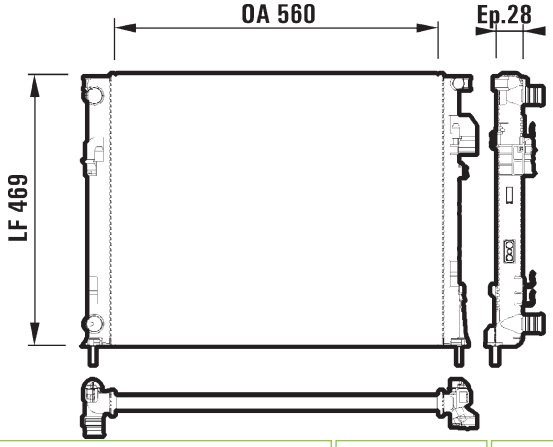


| | | |
|---|---|---|
| NISSAN 2140000QAS<br>OPEL 4408645<br>RENAULT 7700312899<br>VAUXHALL 91166001 | 560x469x27 | 32mm L |
| | | 32mm L |

## 732853 RM1263 ALM

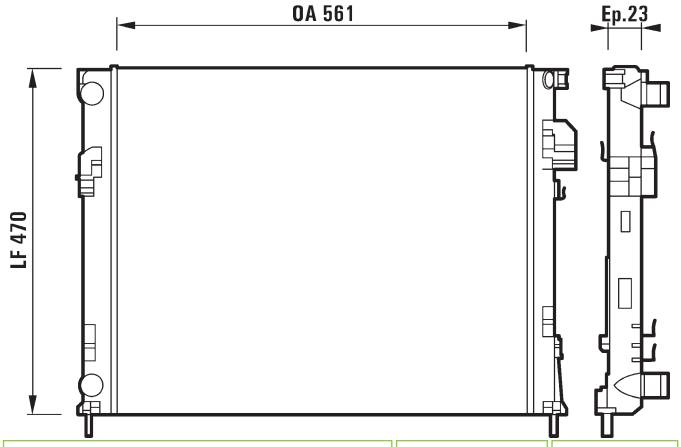


| | | |
|---|---|---|
| NISSAN 2140000QAN<br>OPEL 4414161<br>RENAULT 8200073817<br>VAUXHALL 91166000 | 561x470x23 | 32mm L |
| | | 32mm L |

## 732854 RM1525 ALM

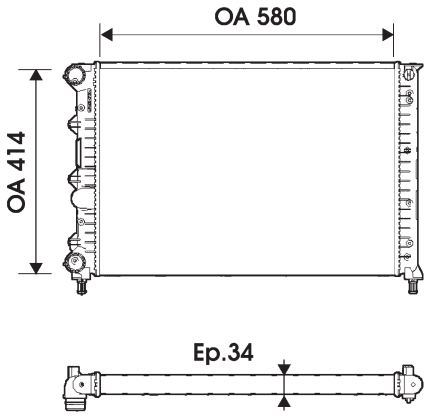


| | | |
|---|---|---|
| ALFA ROMEO 51702463 | 580x414x34 | |
| | | QC |

## 732863 RM1474 ALM

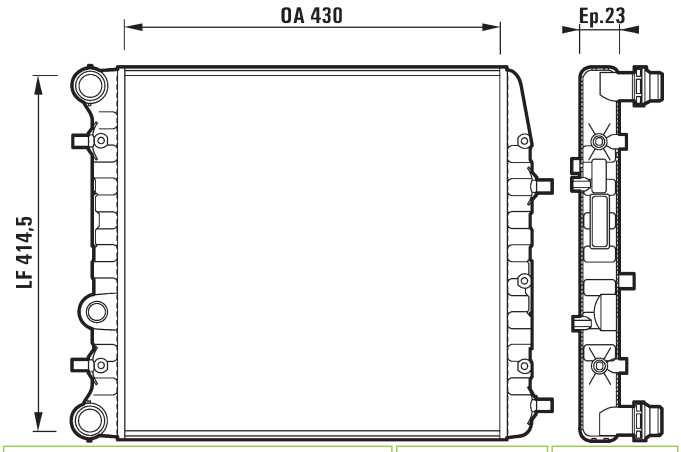


| | | |
|---|---|---|
| SEAT 6Q0121253K<br>SKODA 6Q0121253J<br>VOLKSWAGEN 6Q0121253K | 430x414,5x23 | 32mm L |
| | | 32mm L |

## 732855 RA1414 ALB

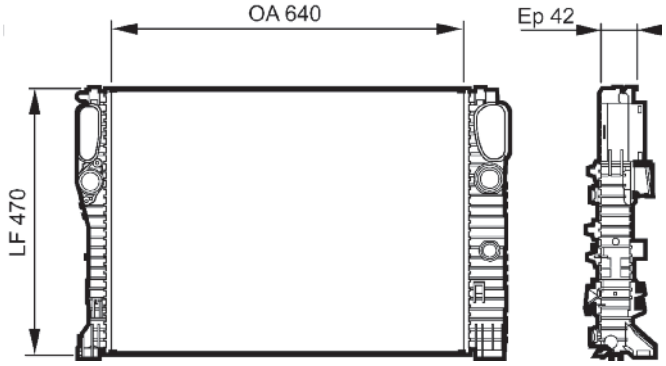


| | | |
|---|---|---|
| MERCEDES 2115003202 | 640x470x42 | |
| | | |

## 732864 6TA114C ALM

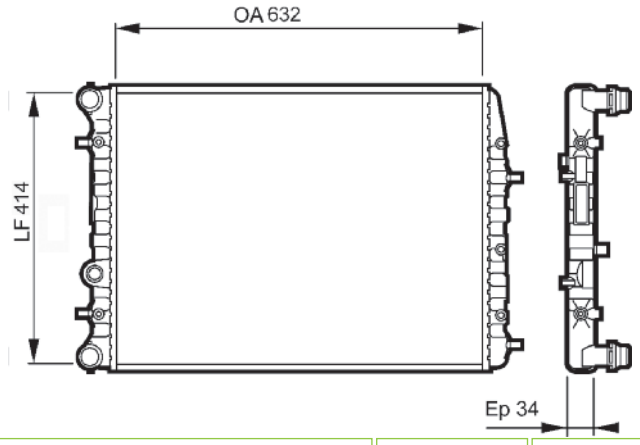


| | | |
|---|---|---|
| SEAT 6Q0121253R<br>SKODA 6Q0121253R<br>VOLKSWAGEN 6Q0121253R | 632x414,5x34 | 32mm QC |
| | | 32mm QC |

## 732862 RM1475 ALM

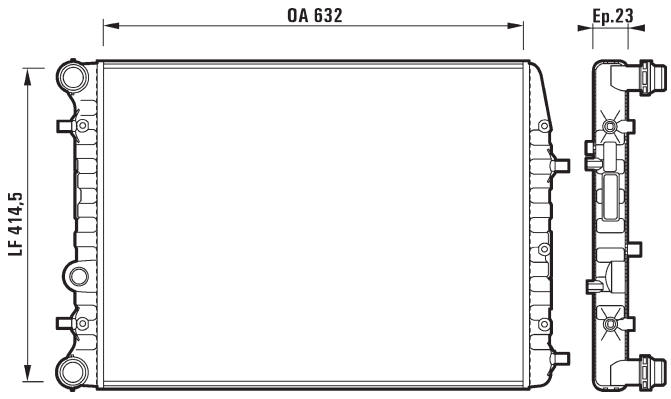


| | | |
|---|---|---|
| SEAT 6Q0121253Q<br>SKODA 6Q0121253Q<br>VOLKSWAGEN 6Q0121253Q | 632x414,5x23 | 32mm QC |
| | | 32mm QC |

## 732866 RM1431 ALM

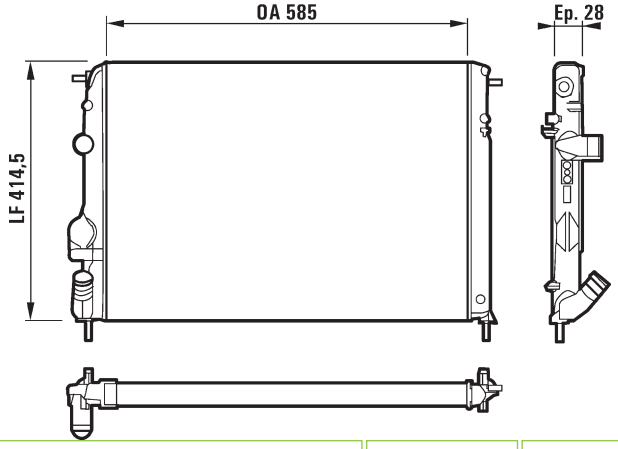


| | | |
|---|---|---|
| RENAULT 8200189286 | 585x414,5x23 | 32mm L |
| | | 32mm L |

## 732867 RA1215 ALB

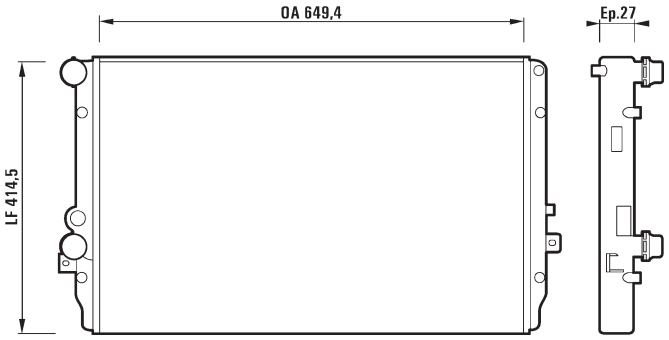


| | | | |
|---|---|---|---|
| SEAT 1J0121253AC<br>VOLKSWAGEN 1J0121253AC | 648,6x414,5x34 | 32mm QC | |
| | | 32mm QC | |

## 732873 RM1261 ALM

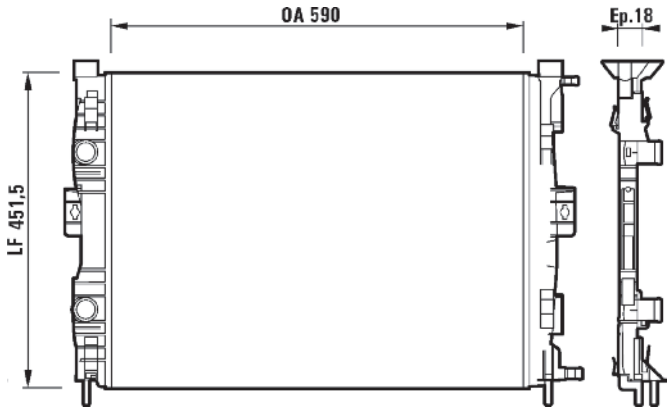


| | | | |
|---|---|---|---|
| RENAULT 8200115541 | 590x451,5x18 | 32mm L | |
| | | 32mm L | |

## 732870 RM1441 ALM

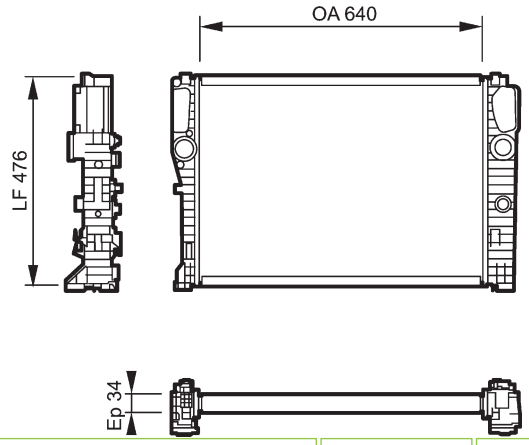


| | | | |
|---|---|---|---|
| MERCEDES 2115002302 | 640x476x34 | | |
| | | QC | |

## 732874 RM1262 ALM

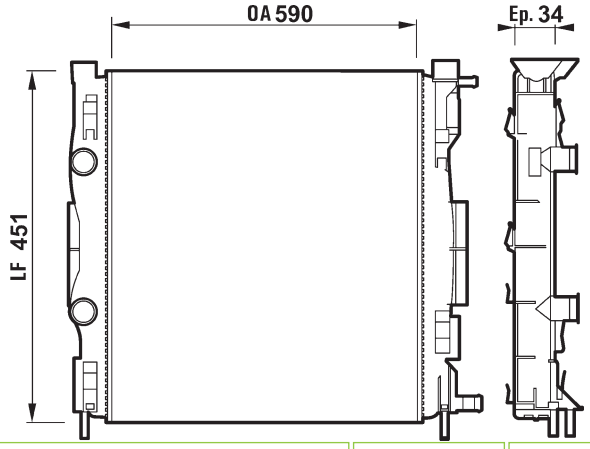


| | | | |
|---|---|---|---|
| RENAULT 8200115542 | 590x451,5x34 | 32mm L | |
| | | 32mm L | |

## 732872 RM1425 ALM

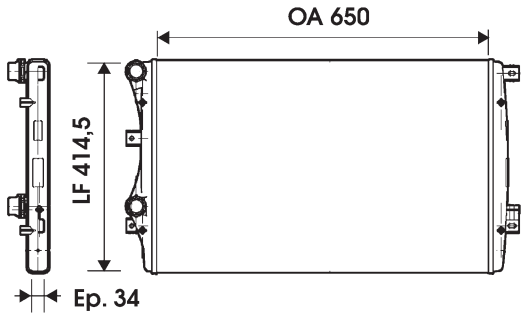


| | | | |
|---|---|---|---|
| AUDI 1K0121253AA<br>SEAT 1K0121253AA<br>SKODA 1K0121253H<br>VOLKSWAGEN 1K0121253AA | 650x414,5x34 | 32mm QC | |
| | | 32mm QC | |

## 732876 RA1218 ALB

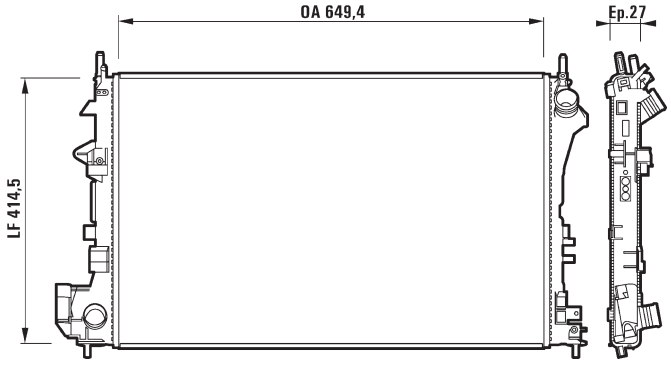


| | | | |
|---|---|---|---|
| OPEL 1300245<br>SAAB 24418341<br>VAUXHALL 24418341 | 650x414,5x27 | 34mm L | |
| | | 34mm L | |

## 732877 RA1220 ALB

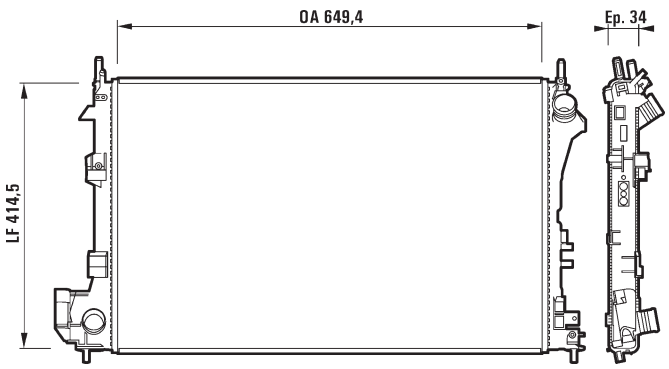


| | | | |
|---|---|---|---|
| FIAT | 51770410 | 650x414,5x34 | 34mm L |
| OPEL | 1300246 | | |
| VAUXHALL | 24418343 | | |
| | | - | 34mm L |

## 732878 RA1281 ALB

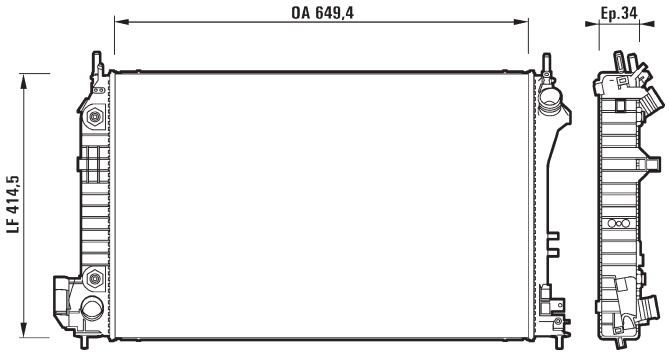


| | | | |
|---|---|---|---|
| FIAT | 51770411 | 650x414,5x34 | 34mm L |
| OPEL | 1300247 | | |
| VAUXHALL | 24418344 | | |
| | | + | 34mm L |

## 732879 RM1620 ALM

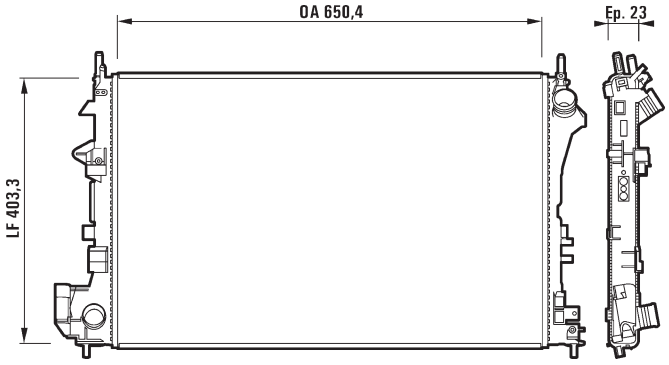


| | | | |
|---|---|---|---|
| OPEL | 1300244 | 649,4x403,3x18 | 34mm L |
| SAAB | 24418338 | | |
| VAUXHALL | 24418338 | | |
| | | - | 34mm L |

## 732880 RA1206 ALB

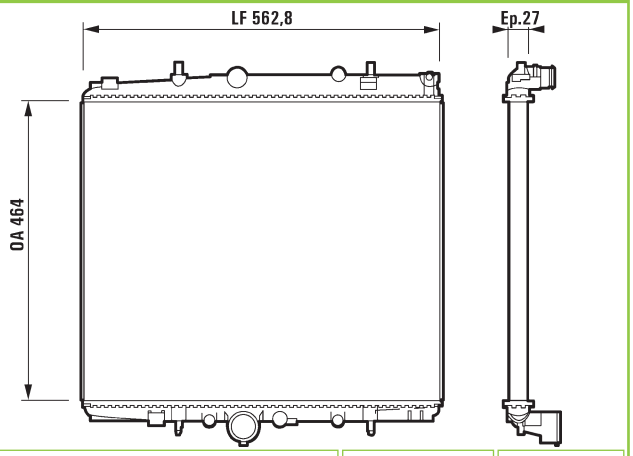


| | | | |
|---|---|---|---|
| CITROEN | 1330A5 | 464x562,8x27 | QC |
| FIAT | 9641728180 | | |
| PEUGEOT | 1330A5 | | |
| | | - | QC |

## 732881 RA1285 ALB

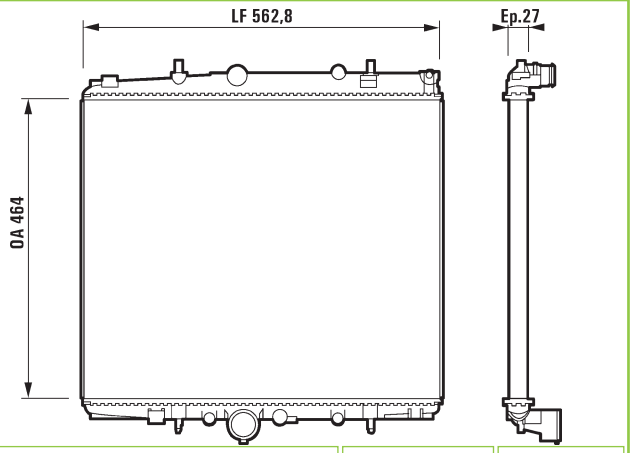


| | | | |
|---|---|---|---|
| CITROEN | 1330E7 | 464x562,8x27 | 32mm L |
| FIAT | 9641728380 | | |
| LANCIA | 9641728380 | | |
| PEUGEOT | 1330E7 | | |
| | | - | 40mm QC |

## 732882 RM1372 ALM

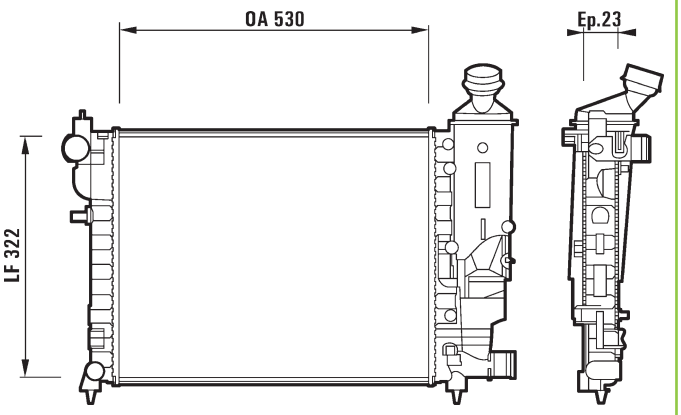


| | | | |
|---|---|---|---|
| PEUGEOT | 1330A7 | 530x322x23 | 32mm L |
| | | - | 32mm L |

## 732883 RA1196 ALB

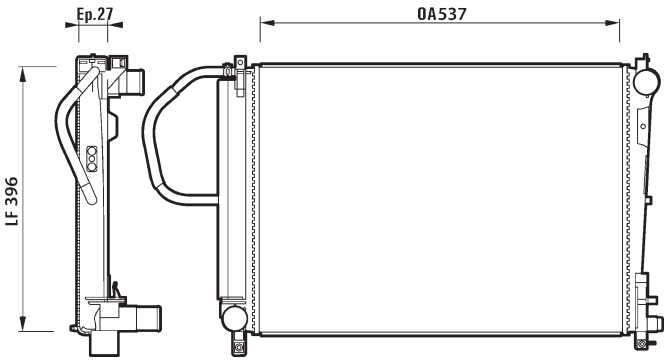


| | | |
|---|---|---|
| CHRYSLER 5072260AA | 537x396x27 | 35mm L |
| | | 35mm L |

## 732887 RM1453 ALM

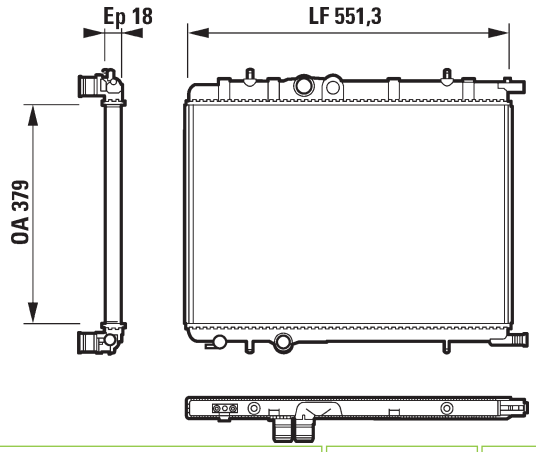


| | | |
|---|---|---|
| CITROEN 1330J3 | 380x551,3x18 | 32mm L |
| | | 32mm L |

## 732885 RM1450 ALM

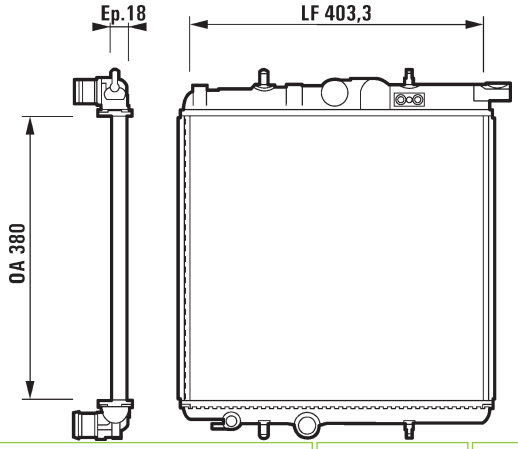


| | | |
|---|---|---|
| PEUGEOT 1330H2 | 380x403,3x18 | 32mm L |
| | | 32mm L |

## 732888 RA1330 ALB

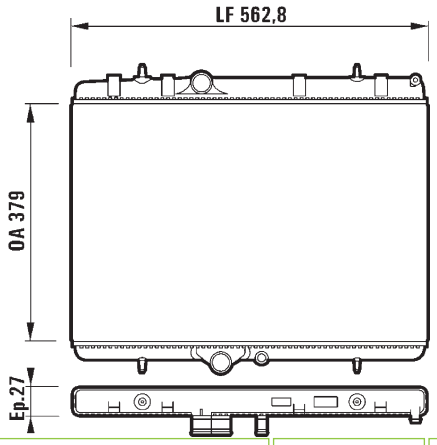


| | | |
|---|---|---|
| CITROEN 1330H0 | 378,6x562,8x27 | |
| | | 32mm L |

## 732886 RM1455 ALM

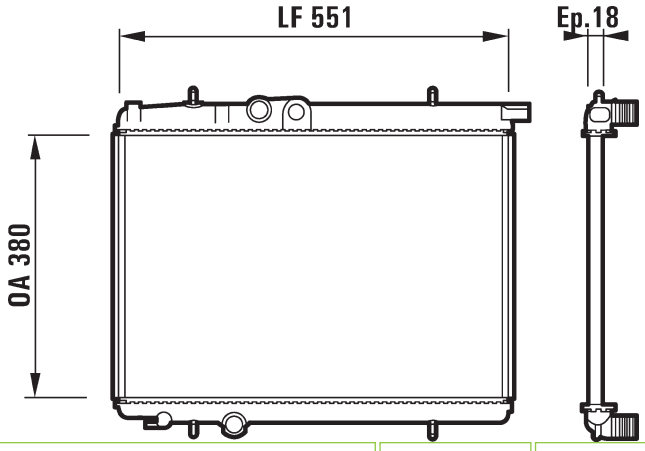


| | | |
|---|---|---|
| PEUGEOT 1330H5<br>PEUGEOT 1330H5 | 380x551,3x18 | 32mm L |
| | | 32mm L |

## 732890 RA1325 ALB

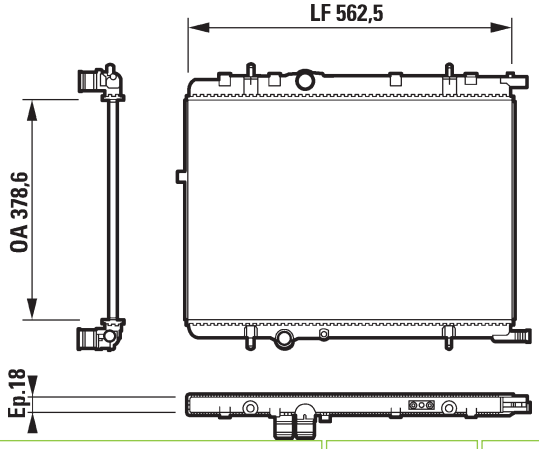


| | | |
|---|---|---|
| CITROEN 1330G3<br>PEUGEOT 1330G3 | 378x562,5x18 | 32mm L |
| | | 32mm L |

## 732891 RA1326 ALB

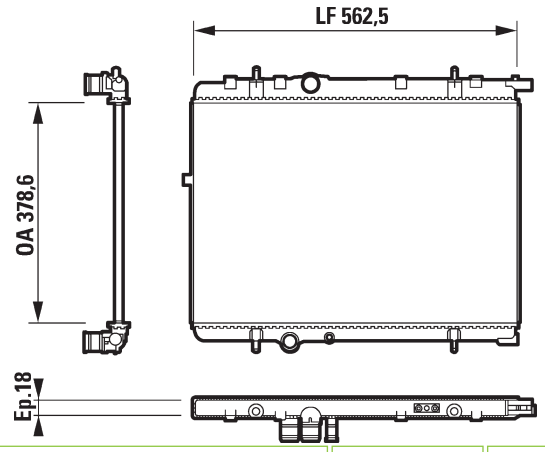


| | | | |
|---|---|---|---|
| CITROEN 1330G4<br>PEUGEOT 1330G4 | 378x562,5x18 | 32mm L | |
| | - | 32mm L | |

## 732894 RA1329 ALB

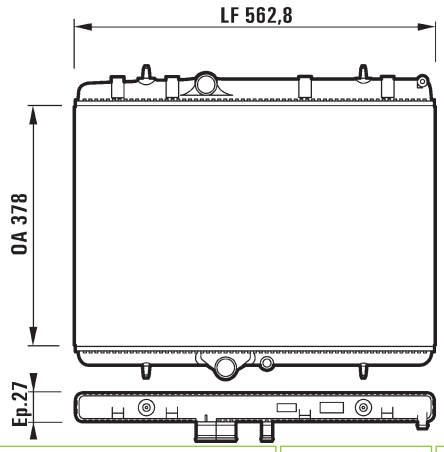


| | | | |
|---|---|---|---|
| CITROEN 1330G9<br>PEUGEOT 1330G9 | 378x562,8x27 | 32mm L | |
| | - | 32mm L | |

## 732892 RA1327 ALB

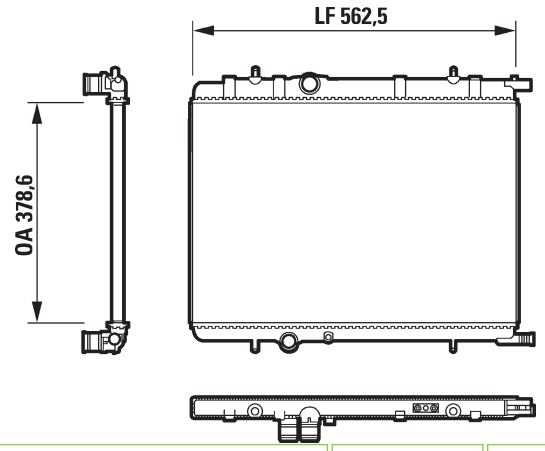


| | | | |
|---|---|---|---|
| CITROEN 1330F4<br>PEUGEOT 1330F4 | 378x562,8x27 | 32mm L | |
| | - | 32mm L | |

## 732895 RA1332 ALB

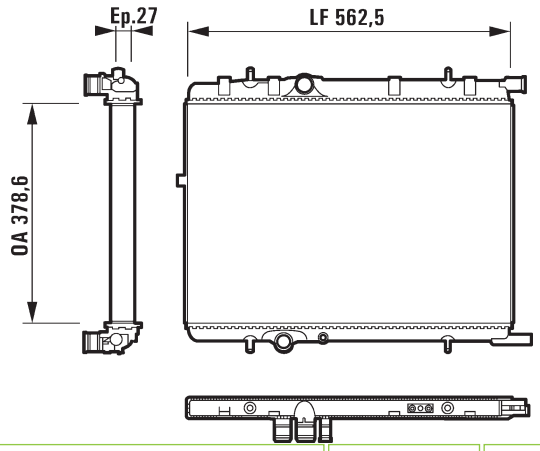


| | | | |
|---|---|---|---|
| CITROEN 133096<br>PEUGEOT 1330F7 | 378x562,8x27 | 32mm L | |
| | - | 32mm L | |

## 732893 RA1328 ALB

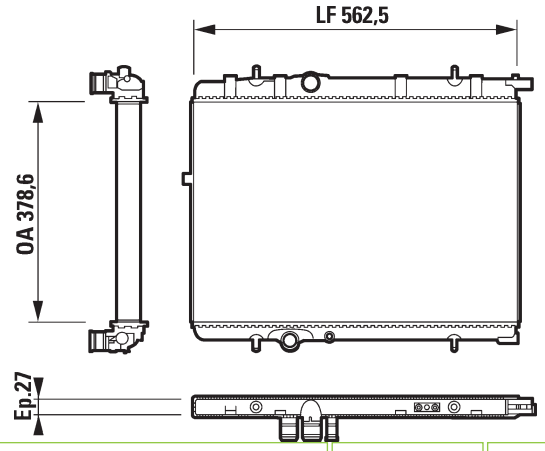


| | | | |
|---|---|---|---|
| CITROEN 1330F6<br>PEUGEOT 1330F6 | 378x562,8x27 | 32mm L | |
| | - | 32mm L | |

## 732896 RA1333 ALB

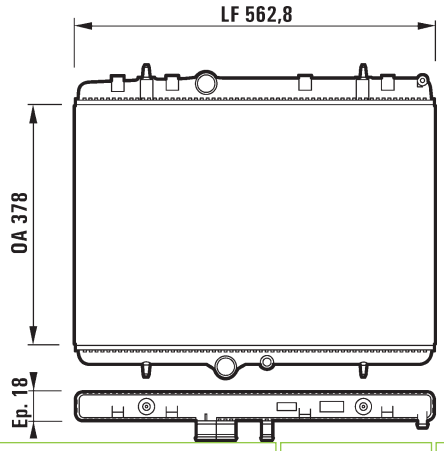


| | | | |
|---|---|---|---|
| PEUGEOT 1330G8 | 378x562,8x18 | 32mm L | |
| | - | 32mm L | |

## 732897 ALM

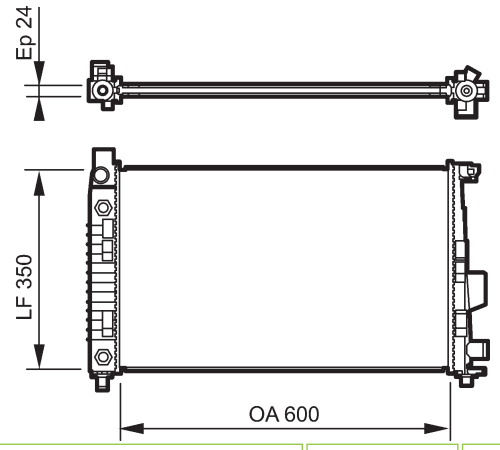


| | | |
|---|---|---|
| MERCEDES 1685001602 | 600x355x24 | 32mm L |
| | | 32mm L |

## 732903 RM1268 ALM

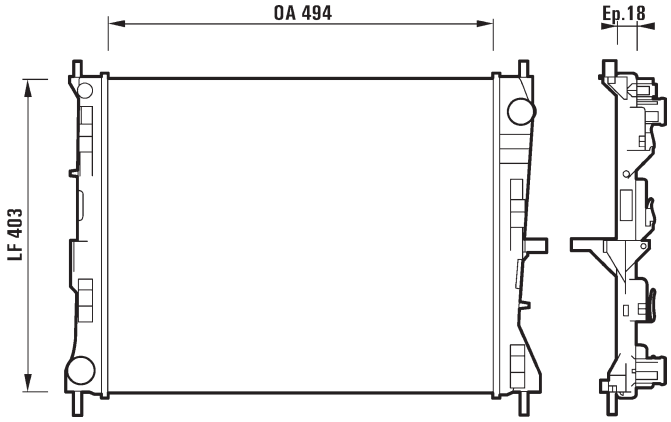


| | | |
|---|---|---|
| NISSAN 21410AY602<br>RENAULT 8200138738 | 494x403x18 | 32mm L |
| | | 32mm L |

## 732900 RA1323 ALB

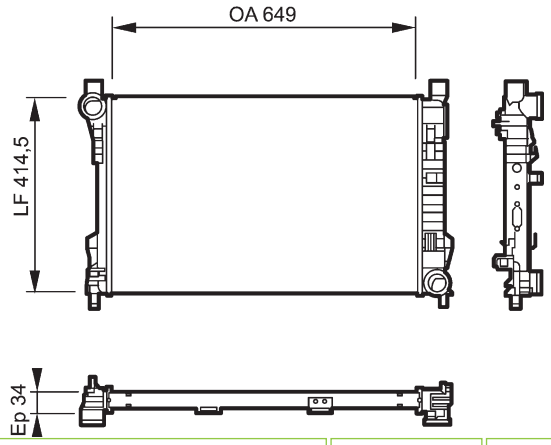


| | | |
|---|---|---|
| MERCEDES 2035002303 | 649x414,5x34 | |
| | | 42mm QC |

## 732904 RA1334 ALB

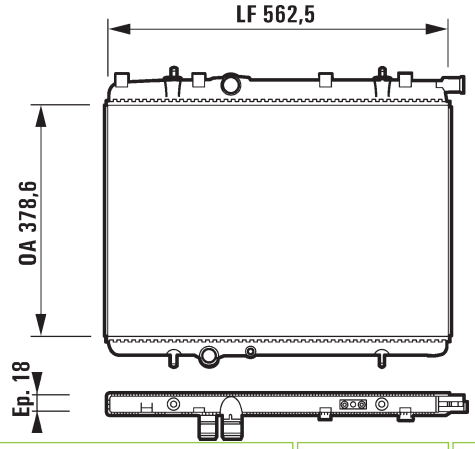


| | | |
|---|---|---|
| PEUGEOT 1330G0 | 379x562,5x18 | 32mm L |
| | | 32mm L |

## 732902 RM1267 ALM

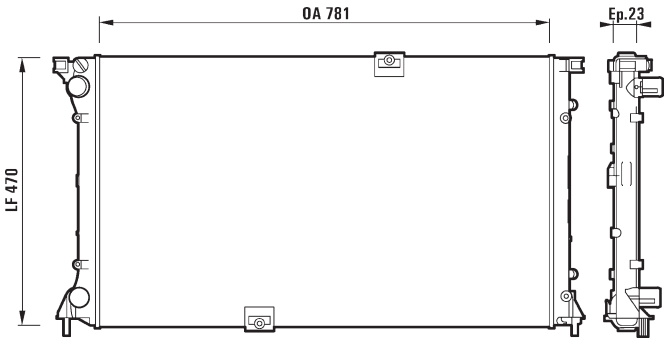


| | | |
|---|---|---|
| NISSAN 2140000QAT<br>OPEL 4414578<br>RENAULT 8200297815<br>VAUXHALL 93852185 | 781,4x470x23 | 32mm L |
| | | 32mm L |

## 732906 RA1336 ALB

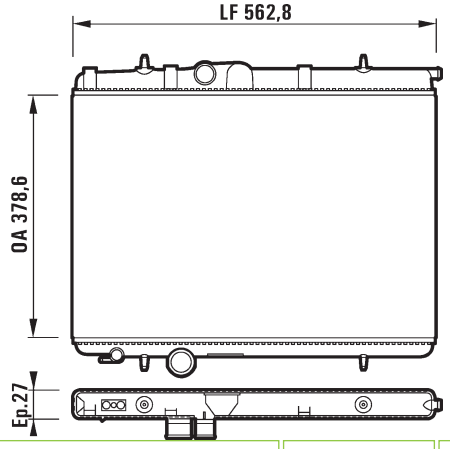


| | | |
|---|---|---|
| PEUGEOT 1330G6 | 378,6x562,5x27 | 32mm L |
| | | 42mm QC |

## 732908 RM1458 ALM

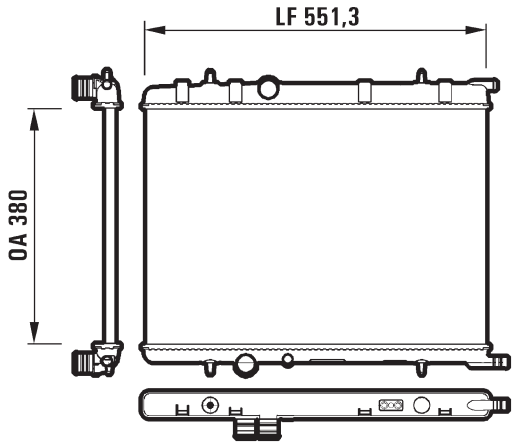


| | | | |
|---|---|---|---|
| CITROEN | 1330G2 | 380x551,3x18 | 32mm L |
| PEUGEOT | 1330G2 | | 32mm L |

## 732911 RA1307 ALB

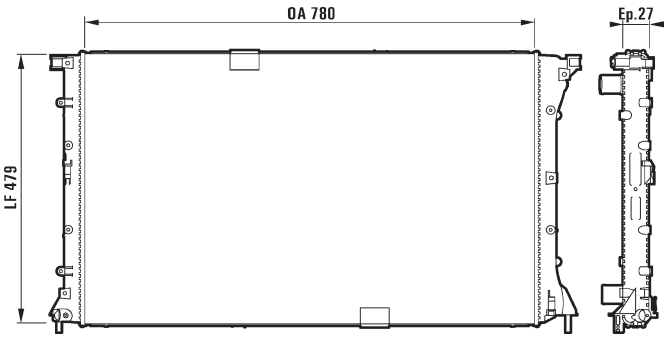


| | | | |
|---|---|---|---|
| OPEL | 4412816 | 780x479x27 | 32mm L |
| RENAULT | 8200297816 | | |
| VAUXHALL | 93852186 | | 32mm L |

## 732909 RA1373 ALB

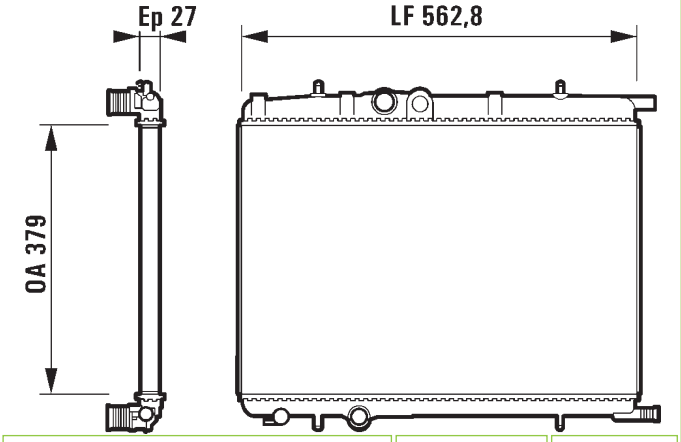


| | | | |
|---|---|---|---|
| CITROEN | 1330H3 | 379x562,8x27 | 32mm L |
| | | | 32mm L |

## 732913 RM1493 ALM

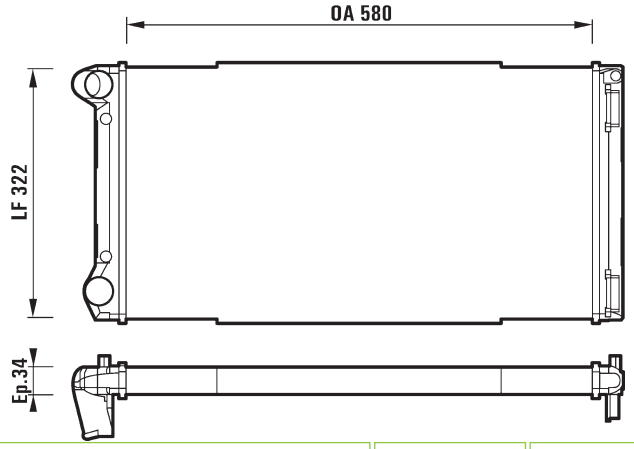


| | | | |
|---|---|---|---|
| FIAT | 51708727 | 580x322x34 | 35mm L |
| LANCIA | 51708727 | | |
| | | | 35mm L |

## 732910 RA1374 ALB

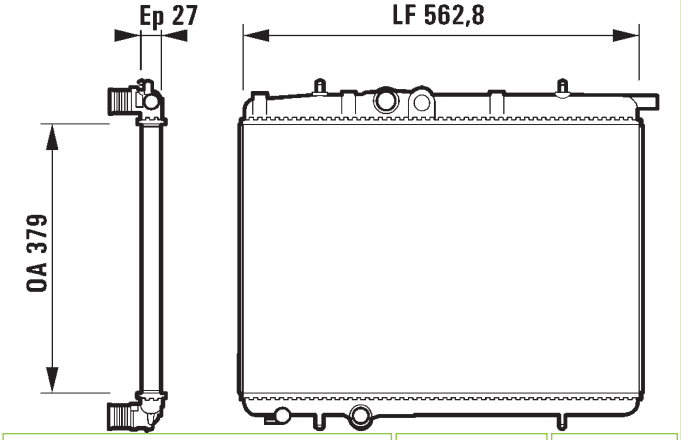


| | | | |
|---|---|---|---|
| PEUGEOT | 1330G1 | 378,6x562,8x27 | 32mm L |
| | | | 32mm L |

## 732917 RM1442 ALM

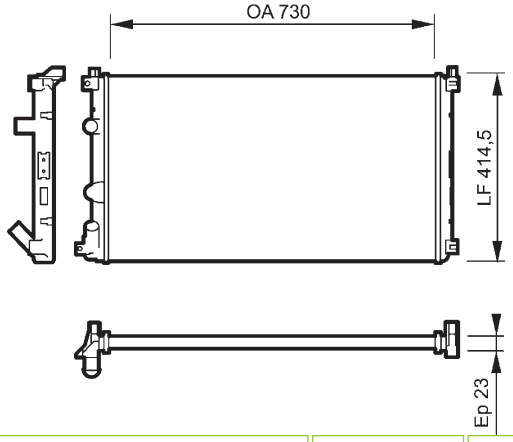


| | | | |
|---|---|---|---|
| NISSAN | 2141000QAA | 730x414,5x23 | 32mm L |
| OPEL | 4415064 | | |
| RENAULT | 7701057117 | | |
| VAUXHALL | 93179722 | | 32mm L |

## 732918 RM1443 ALM

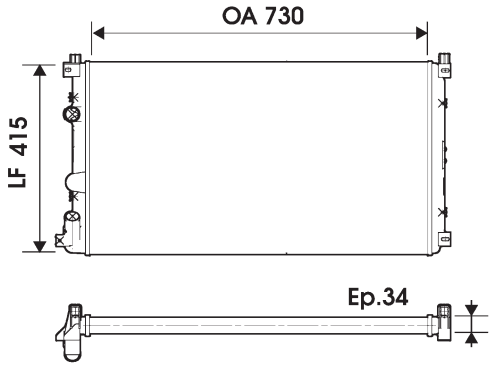


| | | | |
|---|---|---|---|
| NISSAN 2140000QAJ<br>OPEL 4414972<br>RENAULT 7701057119<br>VAUXHALL 93179354 | 730x414,5x34 | 32mm L | |
| | - | 32mm L | |

## 732924 RM1385 ALM

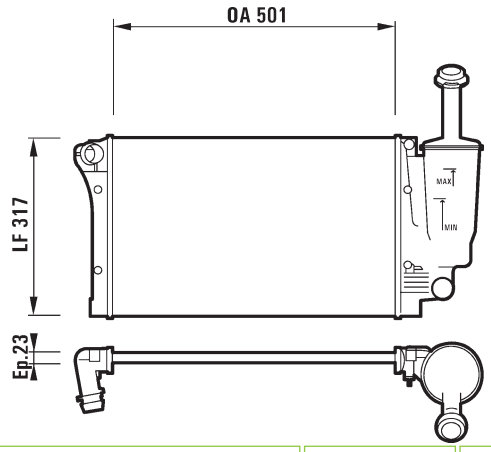


| | | | |
|---|---|---|---|
| FIAT 46798741 | 501x317x23 | QC | |
| | - | 35mm QC | |

## 732919 RC1178 CBS

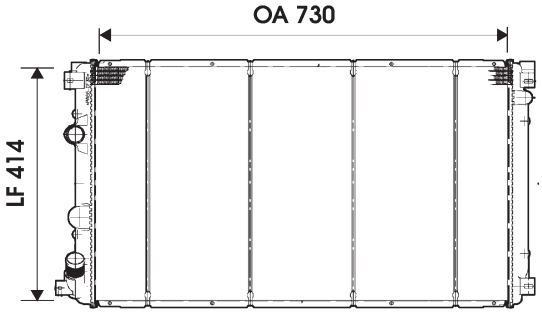


| | | | |
|---|---|---|---|
| NISSAN 2140000QAM<br>OPEL 4415068<br>RENAULT 7701057120<br>VAUXHALL 93179729 | 730x414,5x36 | 32mm L | |
| | - | 32mm L | |

## 732925 RM1387 ALM

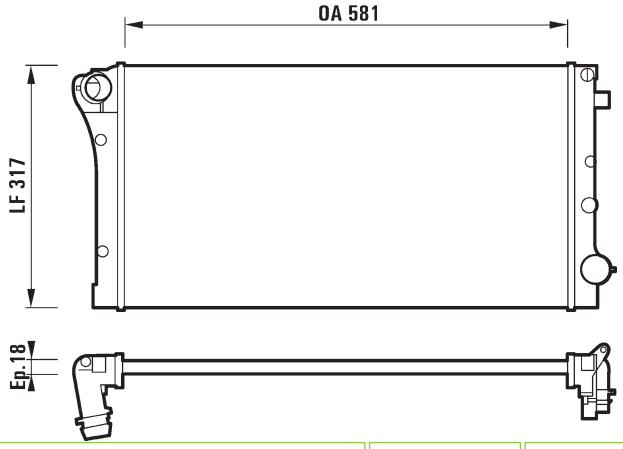


| | | | |
|---|---|---|---|
| FIAT 46798743 | 581x317x18 | 35mm QC | |
| | - | 35mm QC | |

## 732923 RM1530 ALM

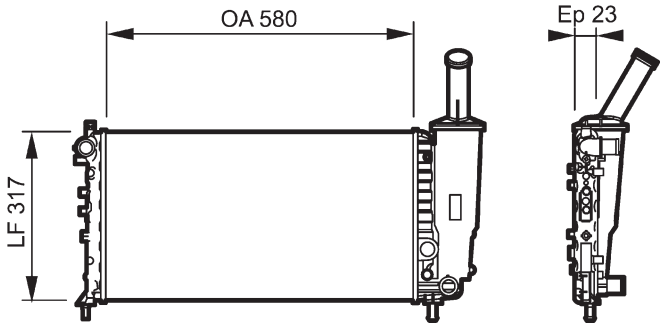


| | | | |
|---|---|---|---|
| FIAT 51724188 | 580x317x23 | 30mm L | |
| | - | 30mm L | |

## 732930 ALB

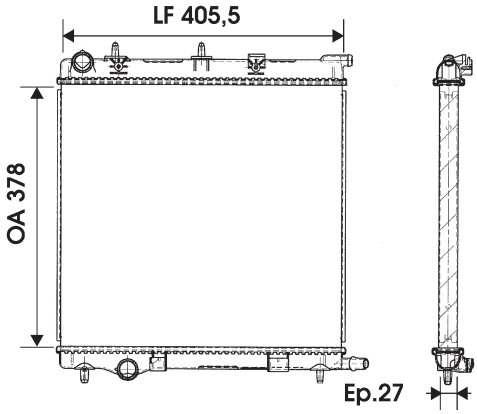


| | | | |
|---|---|---|---|
| CITROEN 1330Q5<br>PEUGEOT 1330Q5 | 378,6x405,5x27 | 28mm L | |
| | - | 28mm L | |

## 732939 RA1387 ALB

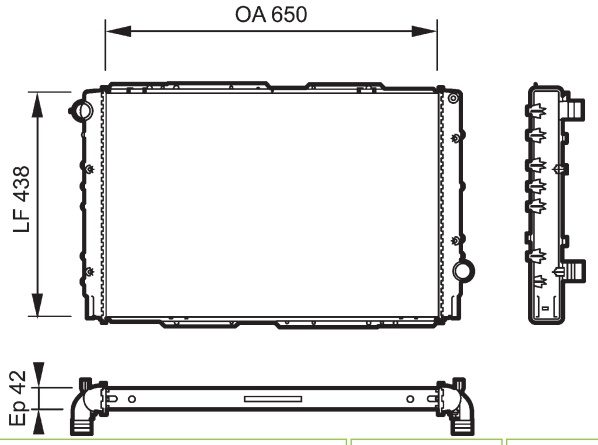


| | | |
|---|---|---|
| LANCIA 51742221 | 650x438x42 | 35mm QC |
| | - | 35mm QC |

## 732945 RA1286 ALB

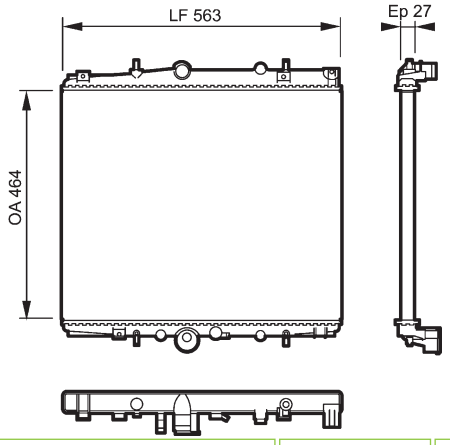


| | | |
|---|---|---|
| CITROEN 1330J6<br>PEUGEOT 1330J6 | 464x563x27 | |
| | - | QC |

## 732940 CBS

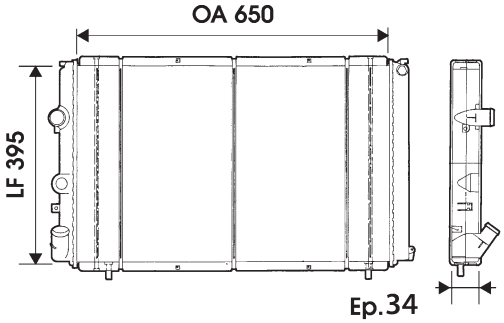


| | | |
|---|---|---|
| OPEL 4400916<br>RENAULT 7700310123<br>VAUXHALL 9108916 | 650x395x34 | 32mm L |
| | - | 32mm L |

## 732946 RA1410 ALB

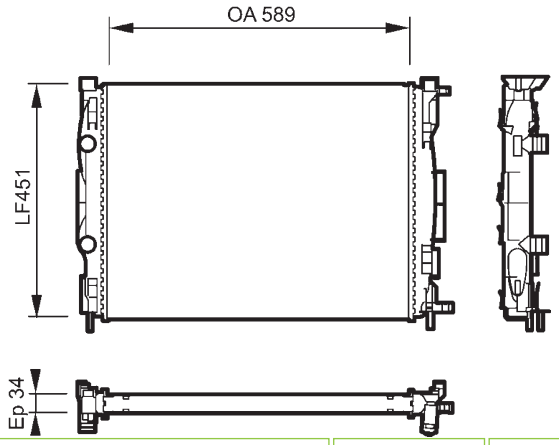


| | | |
|---|---|---|
| RENAULT 8200357536 | 589x451x34 | |
| | - | 32mm L |

## 732944 RA1207 ALB

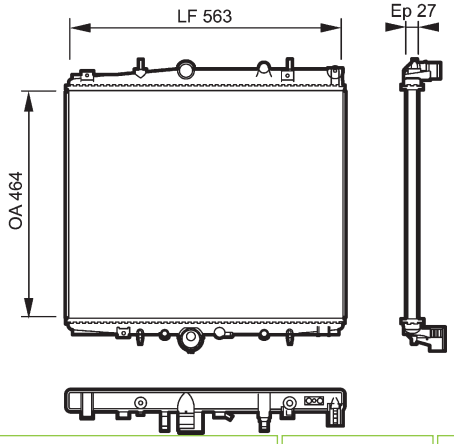


| | | |
|---|---|---|
| CITROEN 1330H8<br>PEUGEOT 1330H8 | 464x563x27 | L |
| | - | QC |

## 732947 RA1219 ALB

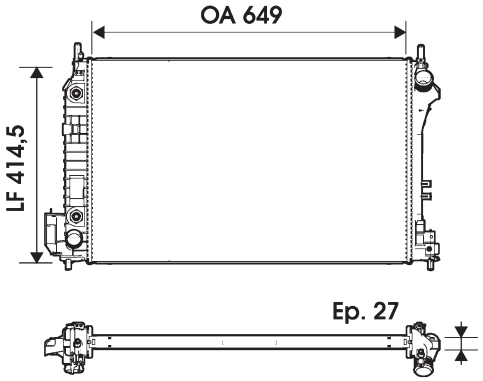


| | | |
|---|---|---|
| SAAB 24418342 | 649x414,5x27 | 34mm L |
| | + | 34mm L |

## 732948 RM1399 ALM

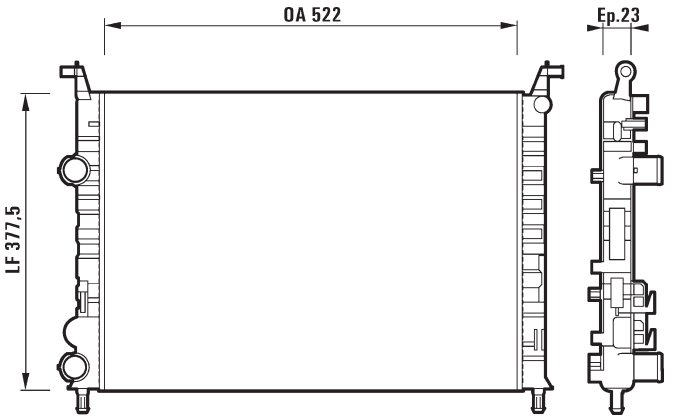


| | | |
|---|---|---|
| FIAT 46833511 | 522x377,5x23 | L |
| | | L |

## 732952 RA1165 ALB

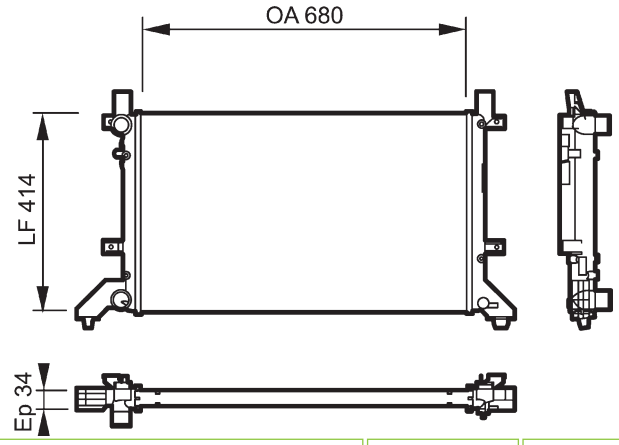


| | | |
|---|---|---|
| VOLKSWAGEN 2D0121253E | 680x414x34 | 38mm L |
| | | 38mm L |

## 732950 ALB

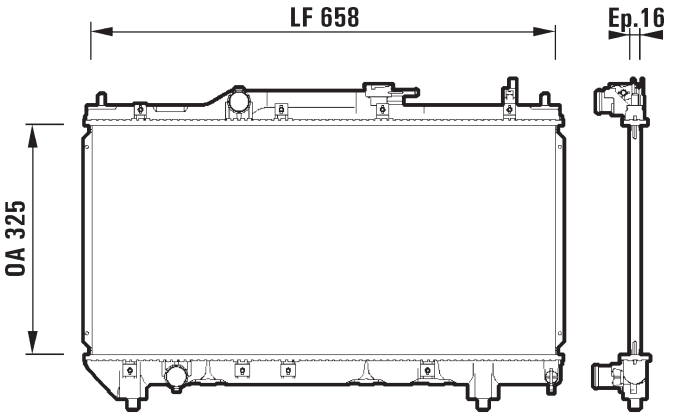


| | | |
|---|---|---|
| TOYOTA 1640002310 | 325x658x16 | 31mm L |
| | | 31mm L |

## 732953 RA1293 ALB

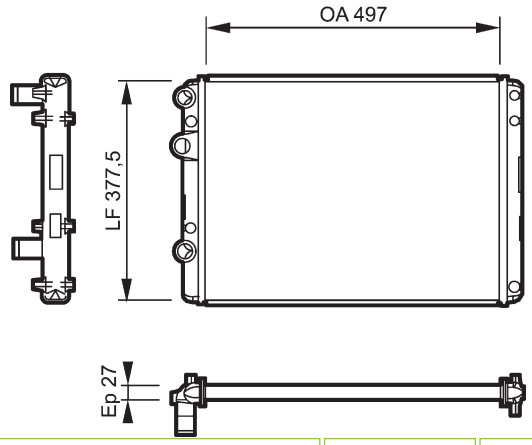


| | | |
|---|---|---|
| VOLKSWAGEN 6N0121253AE | 497x377,5x27 | |
| | | L |

## 732951 ALB

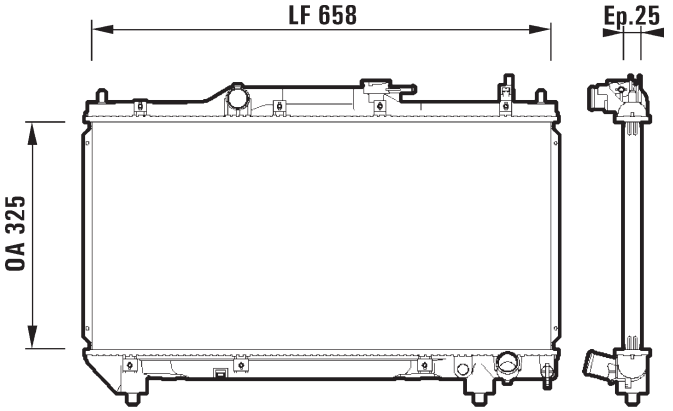


| | | |
|---|---|---|
| TOYOTA 1640003180 | 325x658x25 | 31mm L |
| | | 31mm L |

## 732956 RA1405 ALB

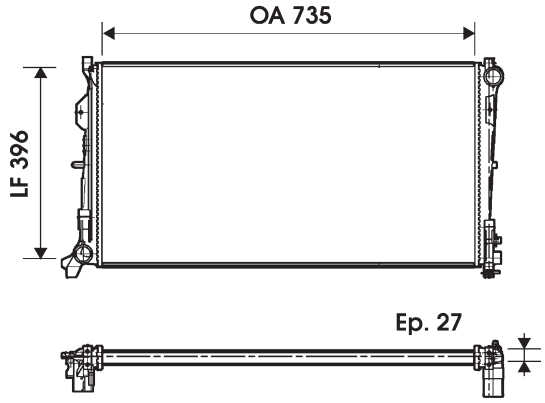


| | | |
|---|---|---|
| CHRYSLER 5142488AA | 735x396x27 | |
| | | L |

## 732957 RA1172 ALB

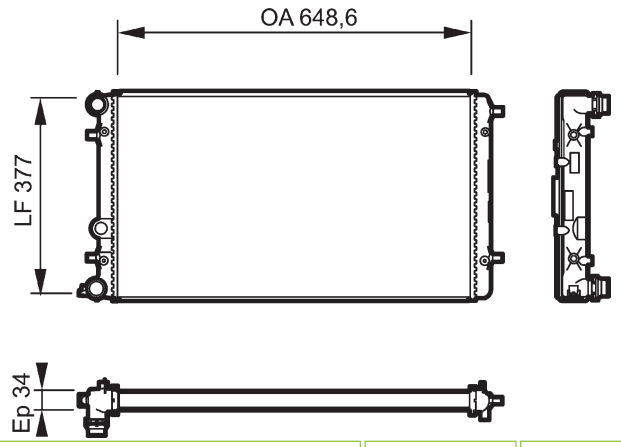


| | | |
|---|---|---|
| VOLKSWAGEN 1C0121253D | 648,6x377x34 | |
| | - | 32mm QC |

## 732963 RM1509 ALM

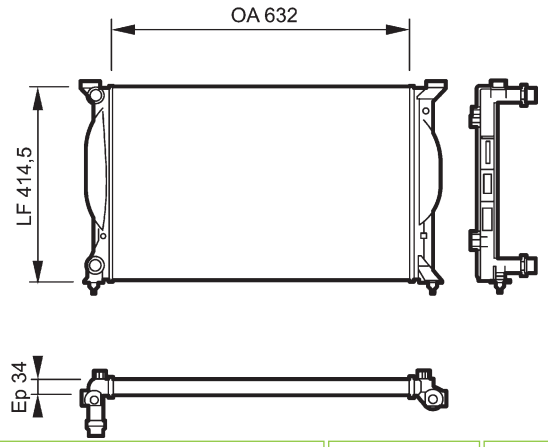


| | | |
|---|---|---|
| AUDI 8E0121251A | 632x414x34 | 32mm QC |
| | - | 32mm QC |

## 732960 RA1340 ALB

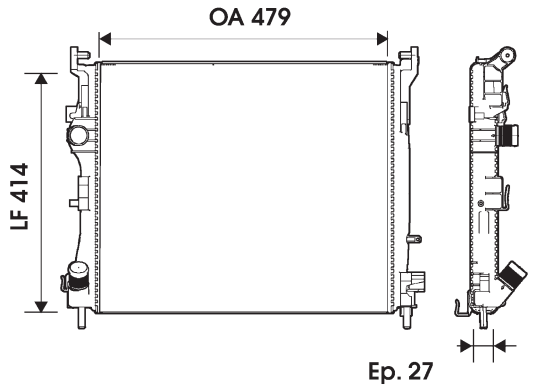


| | | |
|---|---|---|
| RENAULT 8200245596 | 479x414x27 | 32mm L |
| | - | 32mm L |

## 733062 ALM

MC1242

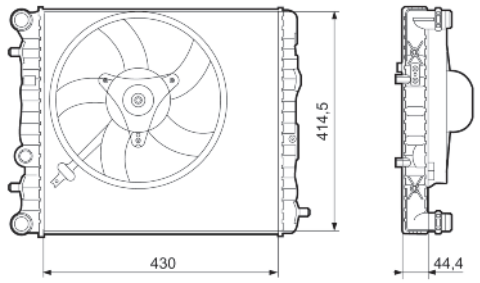


| | | |
|---|---|---|
| SKODA 6Q0121201HA<br>VOLKSWAGEN 6Q0121201BT | 430x414,5x23 | 32mm QC |
| | - | 32mm QC |

## 732962 RM1401 ALM

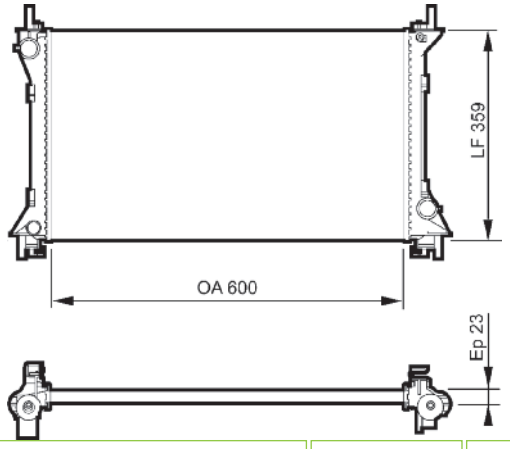


| | | |
|---|---|---|
| FORD 1213022 | 600x359 | |
| | - | |

## 733074 ALM

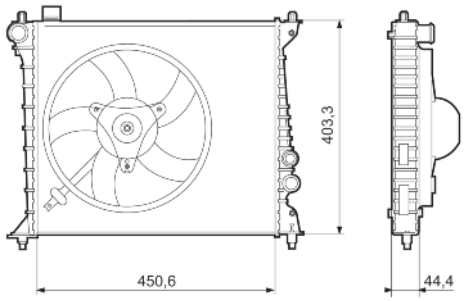


| | | |
|---|---|---|
| AUDI 8Z0121251C | 450x403,3x23 | 32mm L |
| | - | 32mm L |

## 733075 MM1001

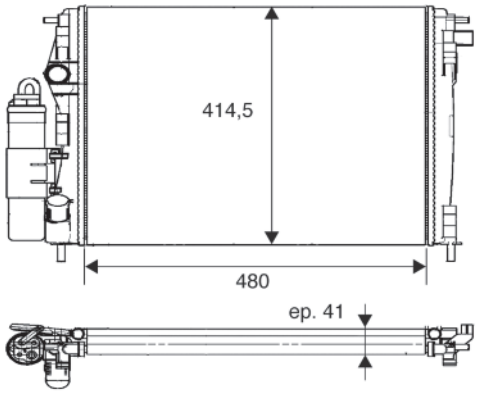


| | | |
|---|---|---|
| RENAUTH 8200211563 | 480x414x41 | |

## 734103 ALB

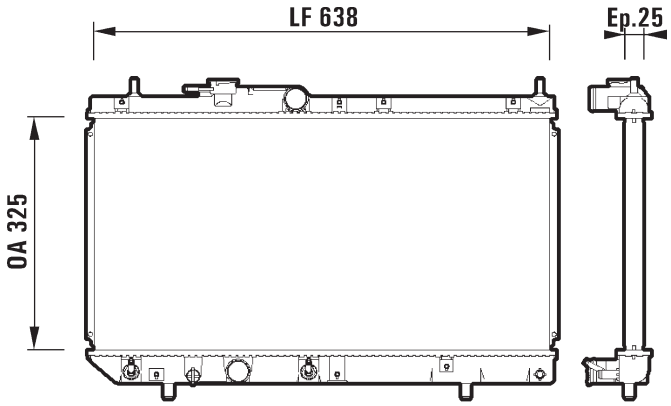


| | | |
|---|---|---|
| DAIHATSU 1640087F41000 | 325x638x25 | 32mm L |
| | + | 32mm L |

## 734101 ALB

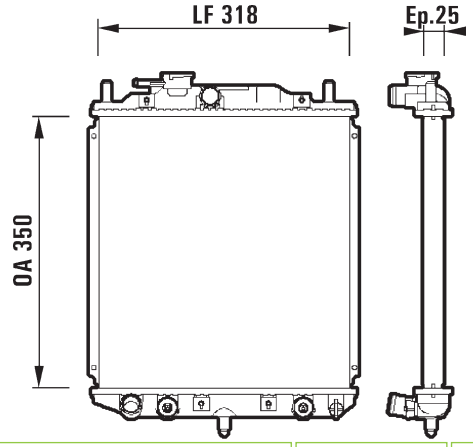


| | | |
|---|---|---|
| DAIHATSU 1640087727000 | 350x318x25 | 25mm L |
| | + | 25mm L |

## 734104 ALB

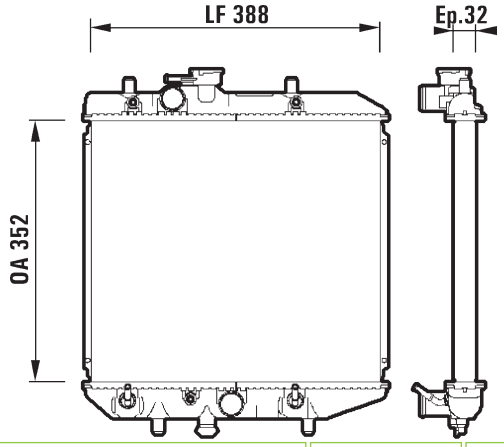


| | | |
|---|---|---|
| DAIHATSU 1640087F12000 | 352x388x32 | 32mm L |
| | + | 32mm L |

## 734102 ALB

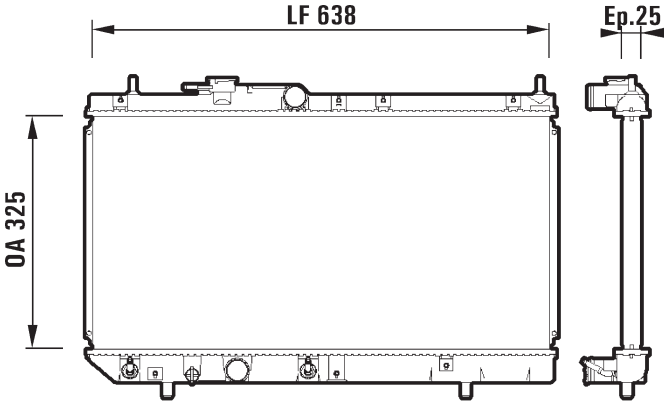


| | | |
|---|---|---|
| DAIHATSU 1640087F37000 | 325x638x25 | 32mm L |
| | + | 32mm L |

## 734105 ALB

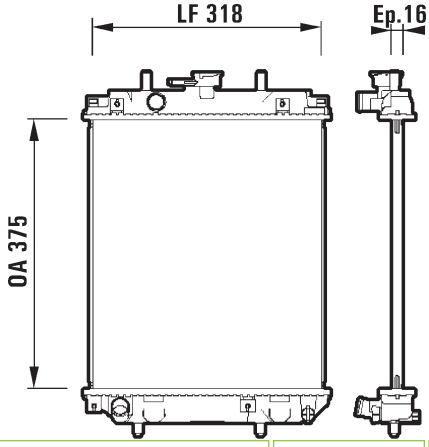


| | | |
|---|---|---|
| DAIHATSU 1640097210000 | 375x318x16 | 27mm L |
| | - | 27mm L |

## 734106 ALB

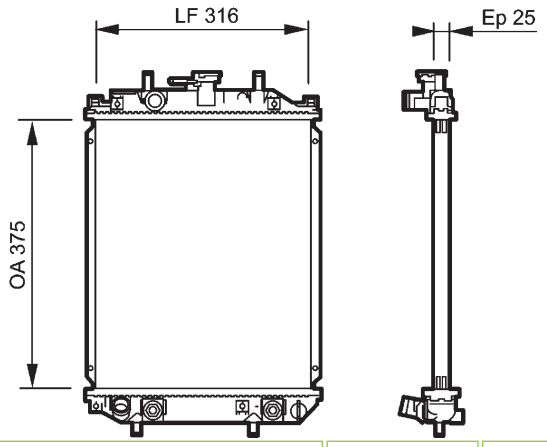


| | | |
|---|---|---|
| DAIHATSU 1640097201000 | 375x316x25 | 25mm L |
| + | | 25mm L |

## 734112 ALB

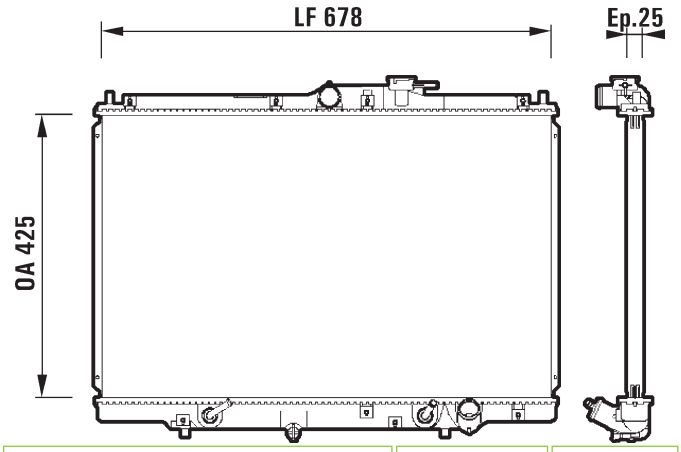


| | | |
|---|---|---|
| HONDA 19010PEA901 | 425x678x25 | 32mm L |
| + | | 32mm L |

## 734109 ALB

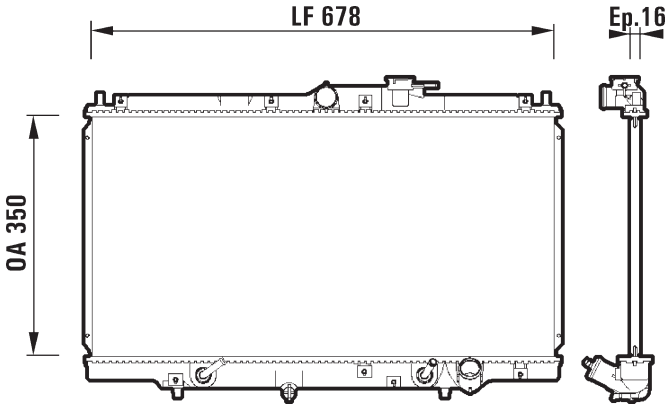


| | | |
|---|---|---|
| HONDA 19010P0HA51 | 350x678x16 | 32mm L |
| + | | 32mm L |

## 734114 ALB

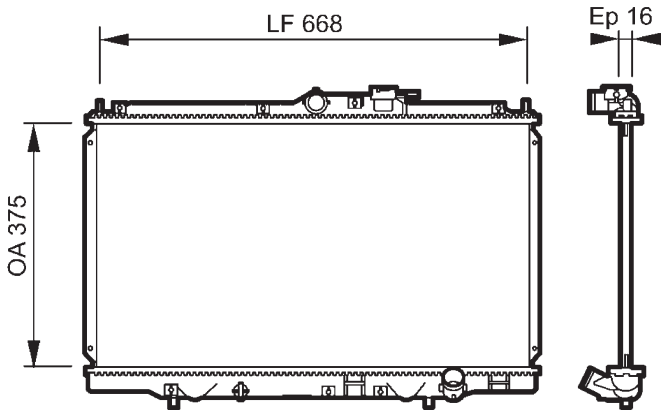


| | | |
|---|---|---|
| HONDA 19010PAAA02 | 375x668x16 | 32mm L |
| - | | 32mm L |

## 734110 ALB

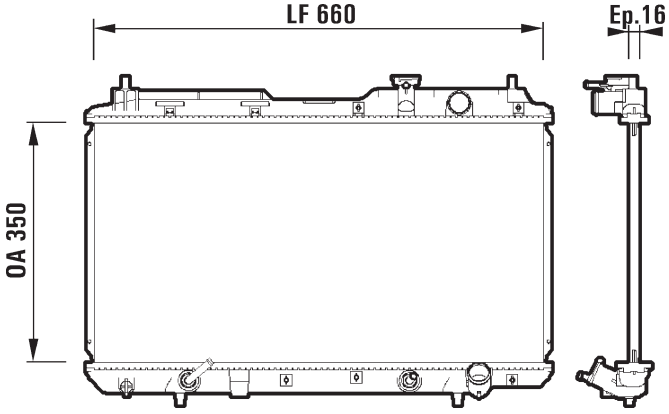


| | | |
|---|---|---|
| HONDA 19010P3F902 | 350x660x16 | 33mm L |
| + | | 33mm L |

## 734117 ALB

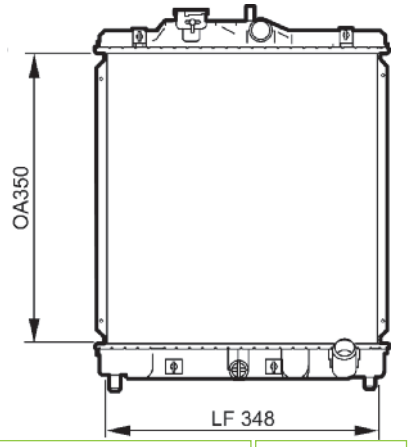


| | | |
|---|---|---|
| HONDA 19010PEL003 | 350x348x16 | |
| - | | 28mm L |

## 734118 ALB

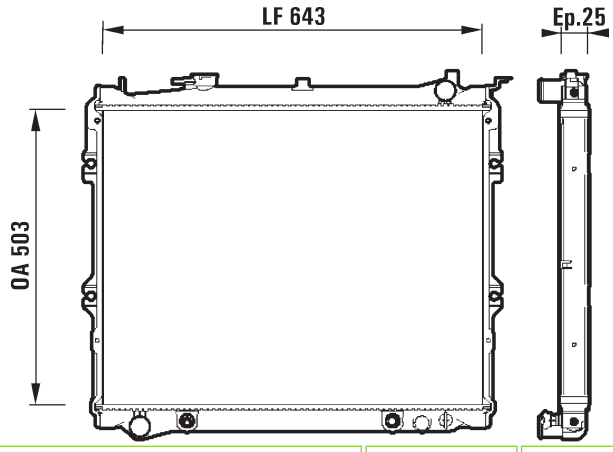


| | | |
|---|---|---|
| MAZDA WL1115200B | 503x643x25 | 35mm L |
| + | | 35mm L |

## 734121 ALB

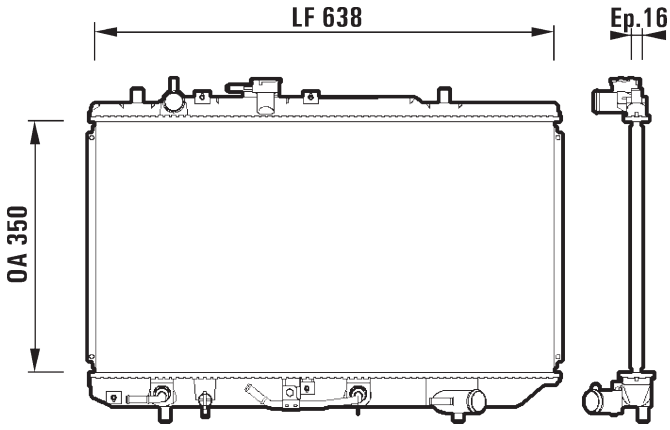


| | | |
|---|---|---|
| MAZDA B3C815200F | 350x638x16 | 28mm L |
| + | | 31mm L |

## 734119 ALB

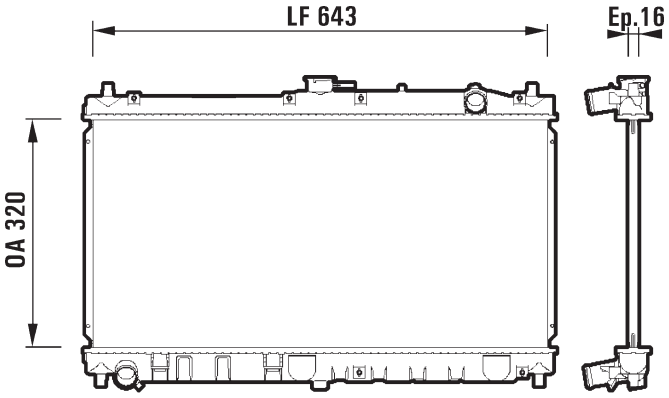


| | | |
|---|---|---|
| MAZDA BP4W15200A | 320x643x16 | 31mm L |
| + | | 31mm L |

## 734122 ALB

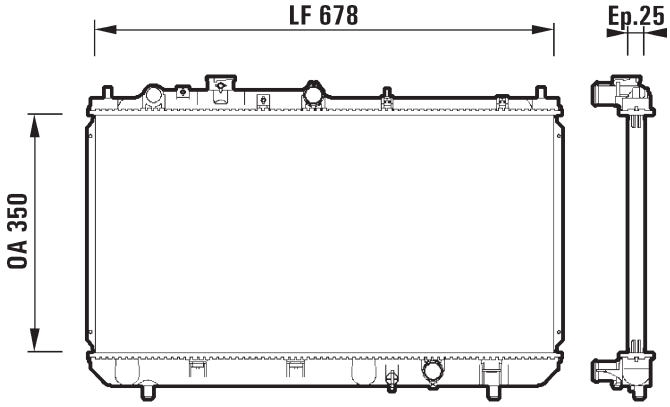


| | | |
|---|---|---|
| MAZDA RF2L15200C | 350x678x25 | 28mm L |
| - | | 28mm L |

## 734120 ALB

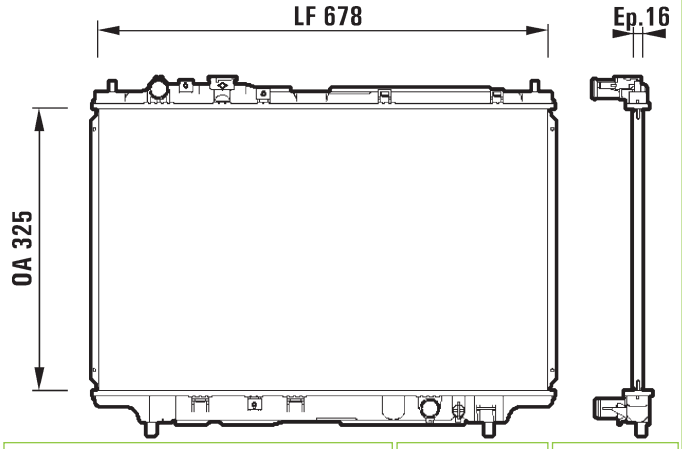


| | | |
|---|---|---|
| MAZDA B6BF15200G | 325x678x16 | 28mm L |
| - | | 31mm L |

## 734123 ALB

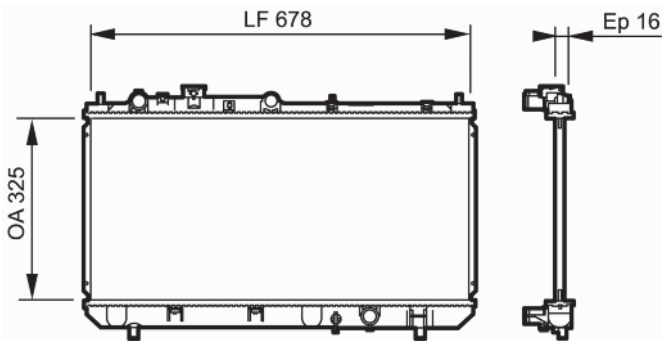


| | | |
|---|---|---|
| MAZDA ZL0115200C | 325x678x16 | 28mm L |
| - | | 28mm L |

## 734124 ALB

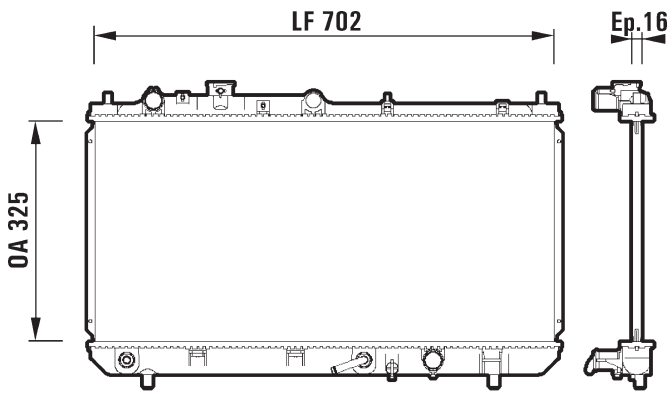


| | | |
|---|---|---|
| MAZDA ZL0215200 | 325x702x16 | 28mm L |
| | + | 28mm L |

## 734129 ALB

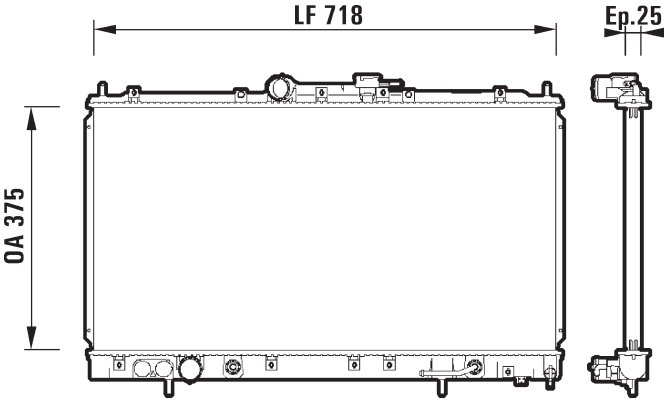


| | | |
|---|---|---|
| MITSUBISHI MR212455 | 375x718x25 | 35mm L |
| | + | 35mm L |

## 734126 ALB

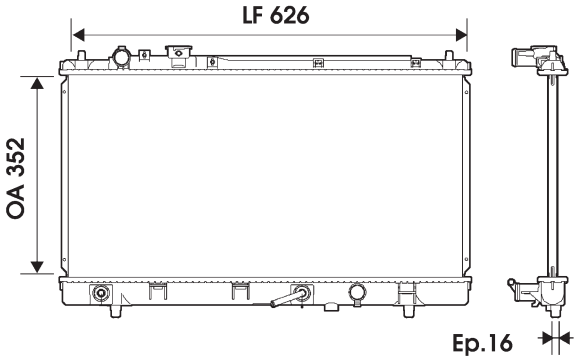


| | | |
|---|---|---|
| MAZDA FP8515200A | 352x686x16 | 28mm L |
| | + | 28mm L |

## 734132 ALB

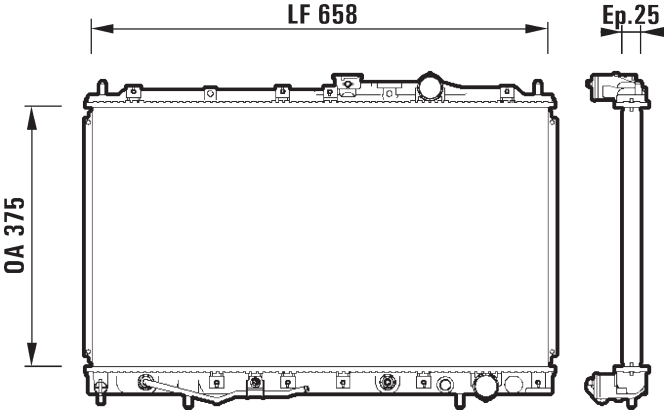


| | | |
|---|---|---|
| MITSUBISHI MB845797 | 375x658x25 | 35mm L |
| | + | 35mm L |

## 734128 ALB

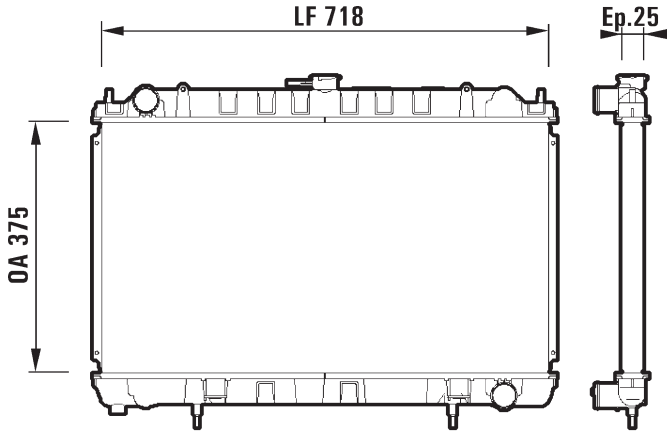


| | | |
|---|---|---|
| MITSUBISHI MR161362 | 375x718x25 | |
| | - | 35mm L |

## 734135 ALB

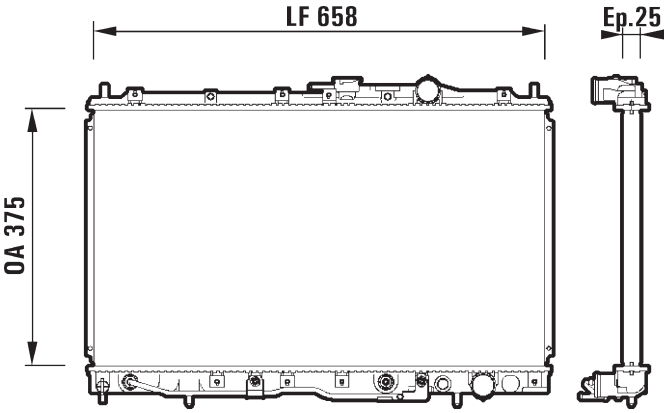


| | | |
|---|---|---|
| MITSUBISHI MB660216 | 375x658x25 | |
| | + | 35mm L |

## 734136 ALB

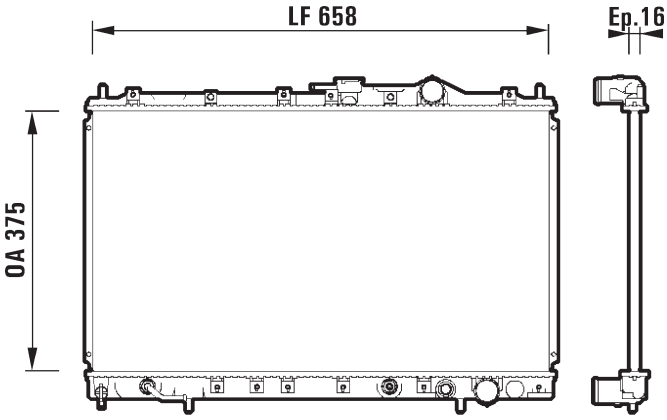


| | | |
|---|---|---|
| MITSUBISHI MB906097 | 375x658x16 | 35mm L |
| | | 35mm L |

## 734139 ALB

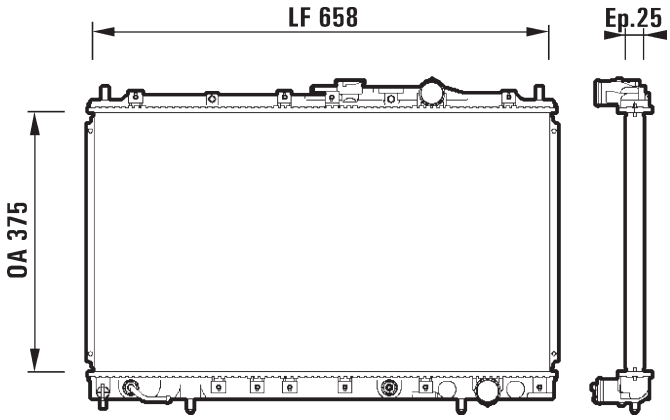


| | | |
|---|---|---|
| MITSUBISHI MB924254 | 375x658x25 | 35mm L |
| | | 35mm L |

## 734137 ALB

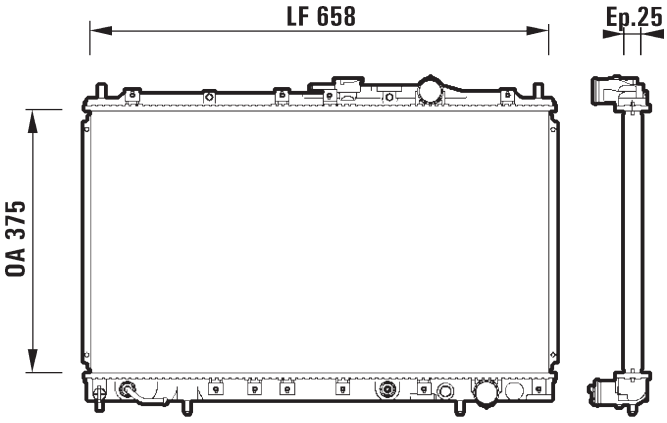


| | | |
|---|---|---|
| MITSUBISHI MB906098 | 375x658x25 | |
| | | 35mm L |

## 734141 CBS

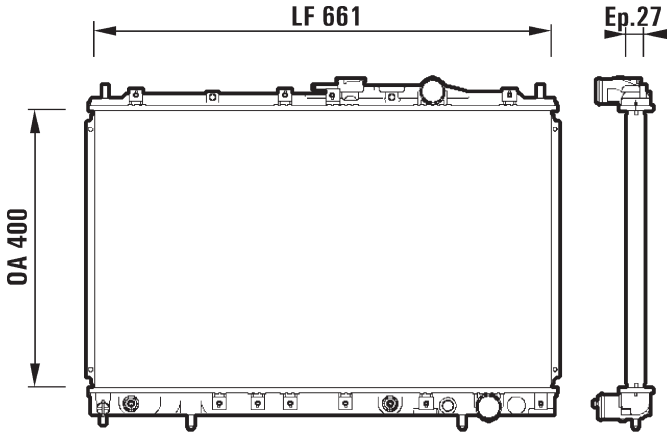


| | | |
|---|---|---|
| MITSUBISHI MB906093 | 400x661x27 | 35mm L |
| | | 35mm L |

## 734138 ALB

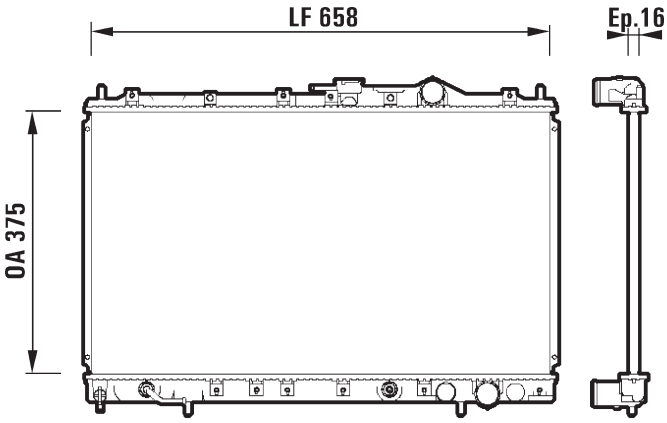


| | | |
|---|---|---|
| MITSUBISHI MB924249 | 375x658x16 | 37mm L |
| | | 37mm L |

## 734142 ALB

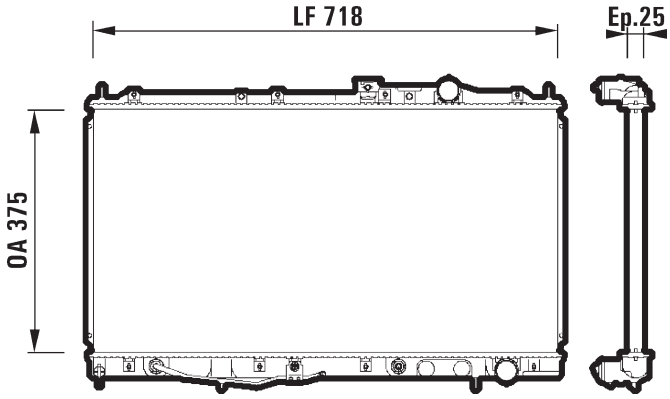


| | | |
|---|---|---|
| MITSUBISHI MB845814 | 375x718x25 | 35mm L |
| | | 35mm L |

## 734143 ALB

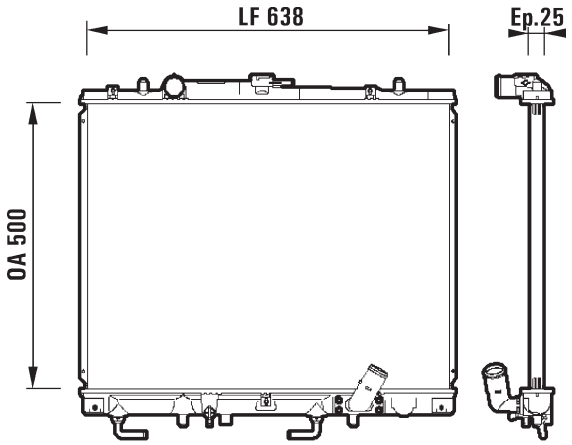


| | | |
|---|---|---|
| MITSUBISHI MR258669 | 500x638x25 | 35mm L |
| | | 35mm L |

## 734146 ALB

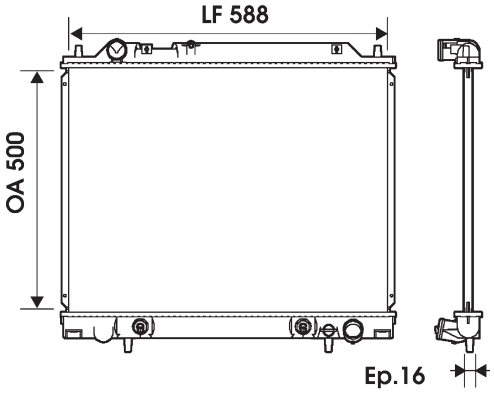


| | | |
|---|---|---|
| MITSUBISHI MR127283 | 500x588x16 | 35mm L |
| | | 35mm L |

## 734144 ALB

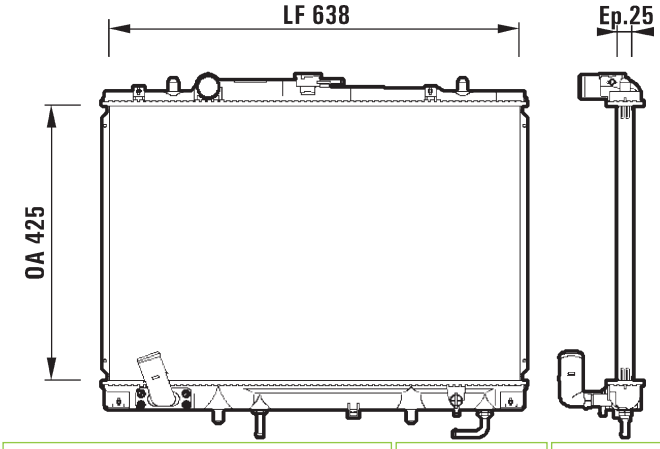


| | | |
|---|---|---|
| MITSUBISHI MR239627 | 425x638x25 | 35mm L |
| | | 35mm L |

## 734149 ALB

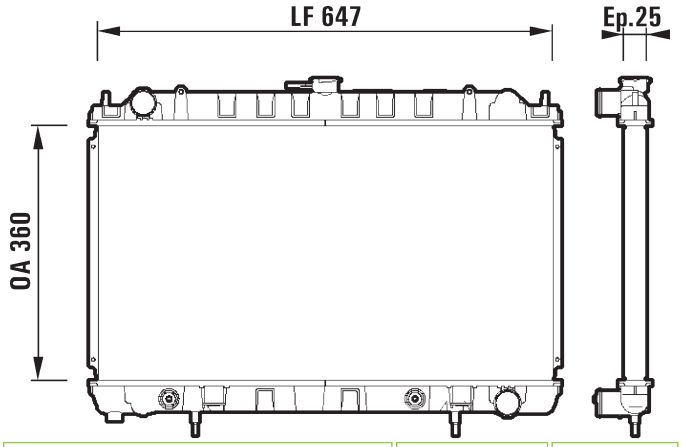


| | | |
|---|---|---|
| NISSAN 2146069F00 | 360x647x25 | |
| | | 35mm L |

## 734145 ALB

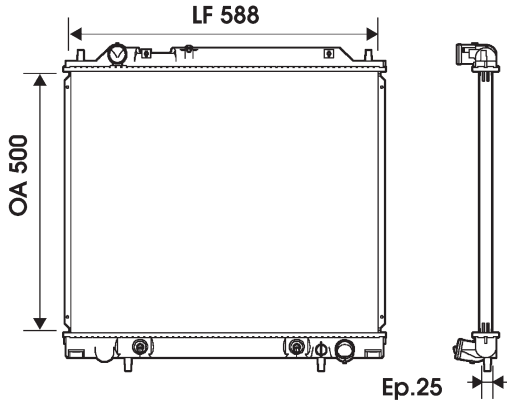


| | | |
|---|---|---|
| MITSUBISHI MR127889 | 500x588x25 | 35mm L |
| | | 35mm L |

## 734150 ALB

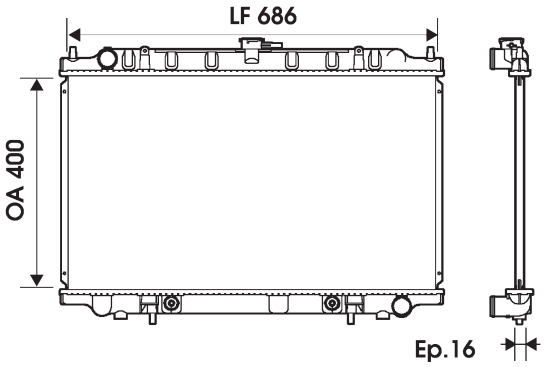


| | | |
|---|---|---|
| NISSAN 214601L015 | 400x686x16 | |
| | | 35mm L |

## 734151 ALB

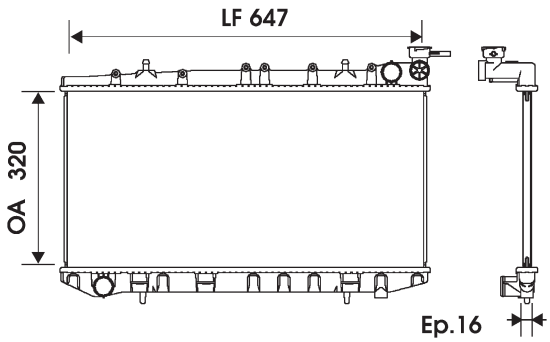


| | | |
|---|---|---|
| NISSAN 214100M203 | 320x647x16 | 35mm L |
| | - | 35mm L |

## 734157 ALB

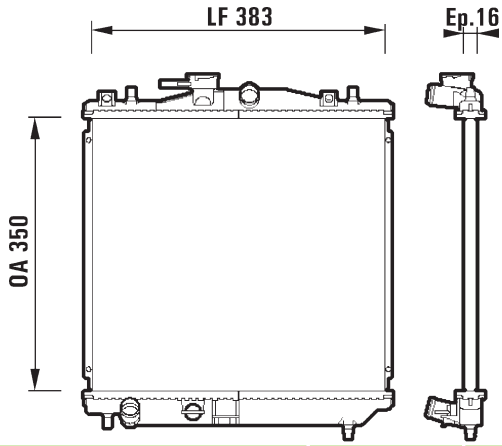


| | | |
|---|---|---|
| SUBARU 45199KC002 | 350x383x16 | |
| | - | 25mm L |

## 734152 ALB

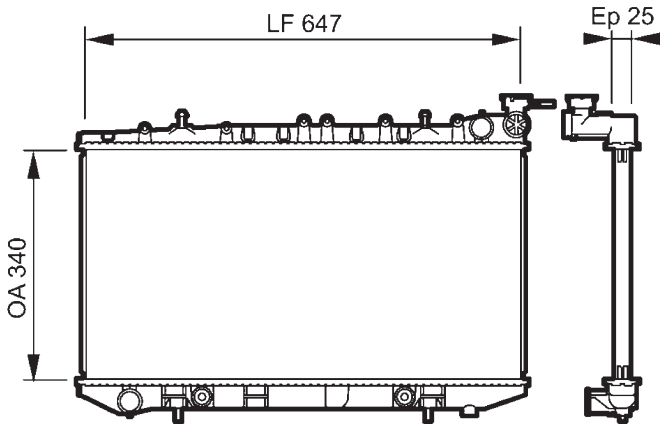


| | | |
|---|---|---|
| NISSAN 2146062J01 | 340x647x25 | |
| | + | 36mm L |

## 734158 ALB

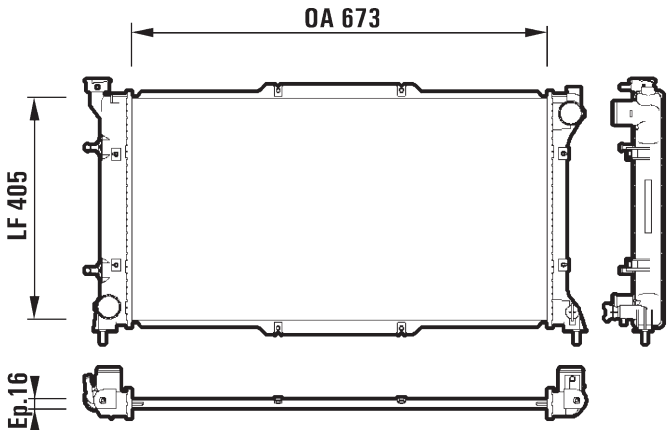


| | | |
|---|---|---|
| SUBARU 45199AC071 | 673x405x16 | 38mm L |
| | + | 38mm L |

## 734155 ALB

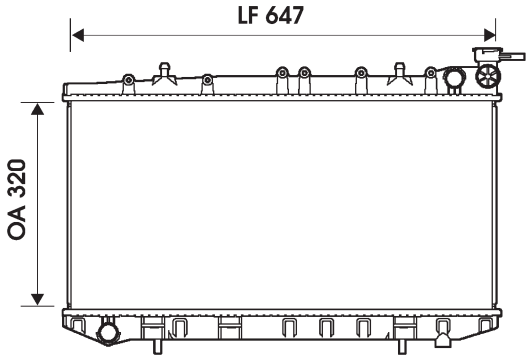


| | | |
|---|---|---|
| NISSAN 214100M204 | 320x647x16 | |
| | - | 28mm L |

## 734159 CBS

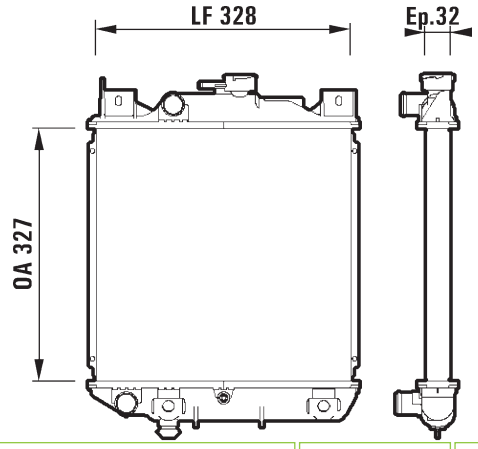


| | | |
|---|---|---|
| SUZUKI 1770060B32 | 327x328x32 | 28mm L |
| | + | 28mm L |

## 734161 ALB

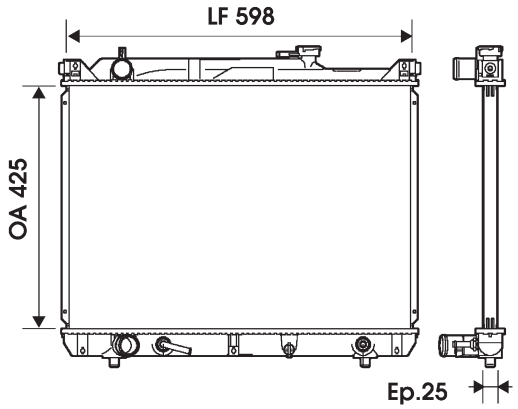


| | | |
|---|---|---|
| SUZUKI 1770052D10 | 425x598x25 | 34mm L |
| | + | 34mm L |

## 734165 ALB

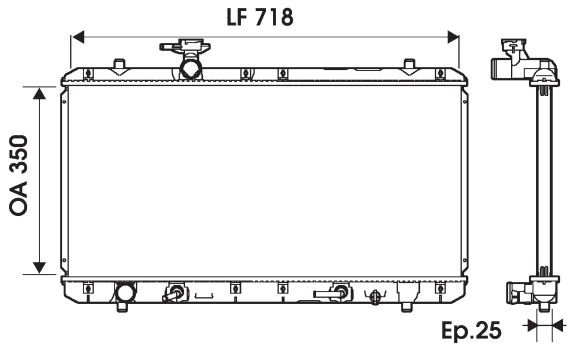


| | | |
|---|---|---|
| SUZUKI 1770054G10 | 350x718x25 | 34mm L |
| | + | 34mm L |

## 734162 ALB

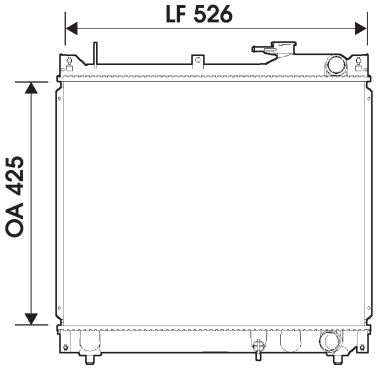


| | | |
|---|---|---|
| SUZUKI 1770066D01 | 425x526x16 | |
| | - | 34mm L |

## 734166 CBS

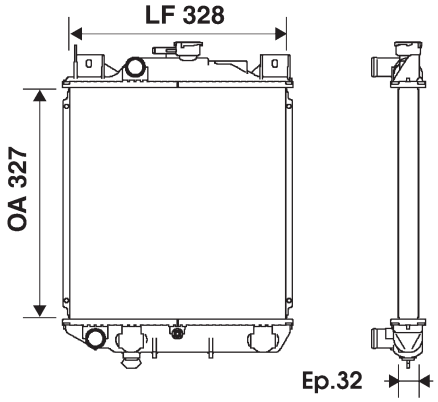


| | | |
|---|---|---|
| SUZUKI 1770071C01 | 352x328x32 | 28mm L |
| | - | 28mm L |

## 734164 ALB

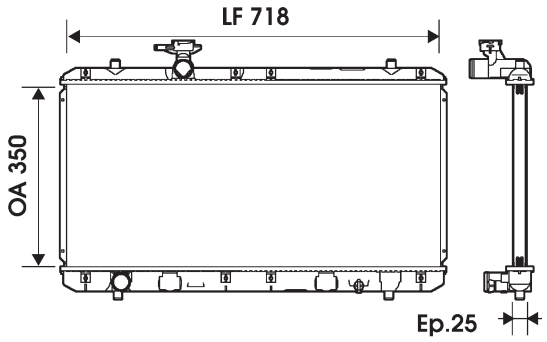


| | | |
|---|---|---|
| SUZUKI 1770054G00 | 350x718x25 | 34mm L |
| | - | 34mm L |

## 734170 ALB

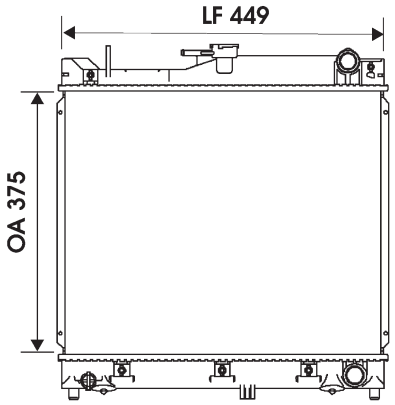


| | | |
|---|---|---|
| SUZUKI 1770081A00 | 375x449x27 | 28mm L |
| | - | 28mm L |

## 734171 ALB

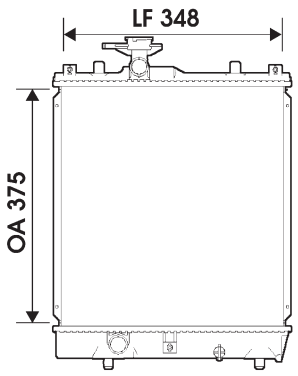


| | | |
|---|---|---|
| SUZUKI 1770080G00 | 375x348x25 | 28mm L |
| | - | 28mm L |

## 734174 ALB

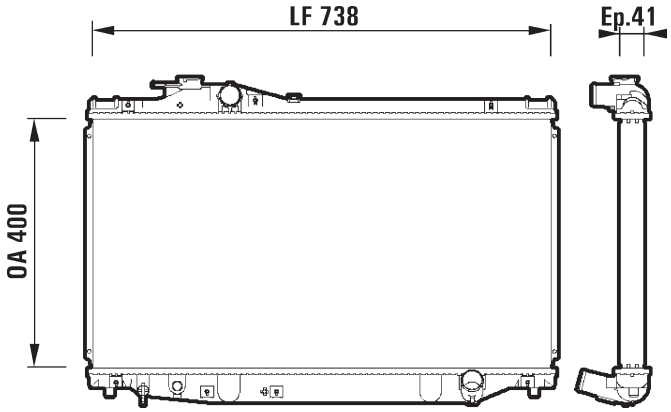


| | | |
|---|---|---|
| TOYOTA 1640046310 | 400x738x41 | |
| | - | 34mm L |

## 734172 ALB

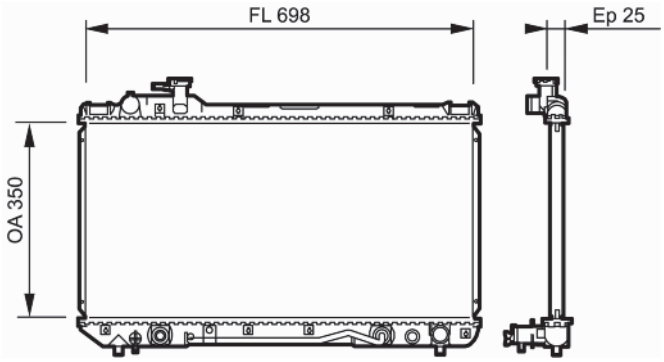


| | | |
|---|---|---|
| TOYOTA 164007A110 | 350x698x25 | 31mm L |
| | - | 31mm L |

## 734175 ALB

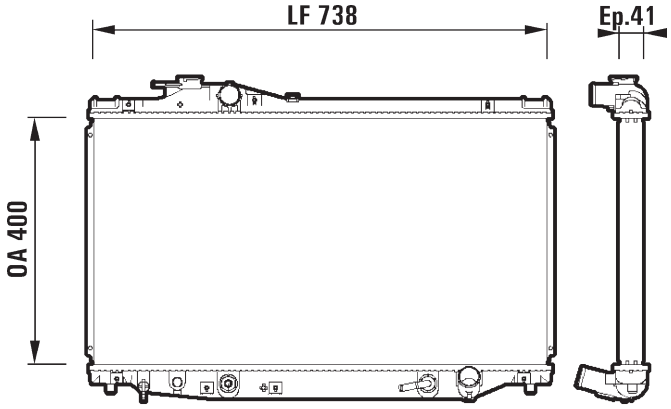


| | | |
|---|---|---|
| TOYOTA 1640046320 | 400x738x41 | |
| | + | 34mm L |

## 734173 ALB

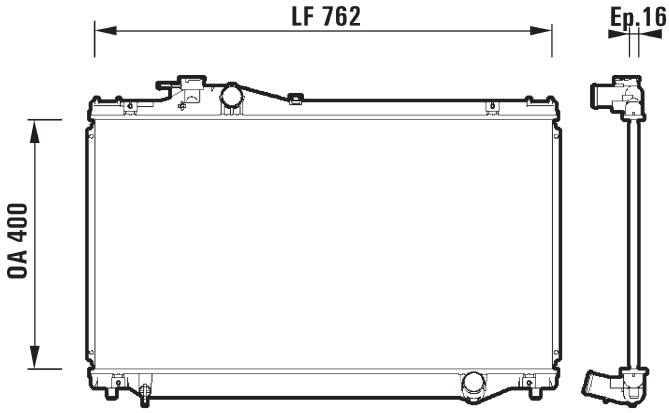


| | | |
|---|---|---|
| TOYOTA 1640046290 | 400x762x16 | |
| | - | 34mm L |

## 734176 ALB

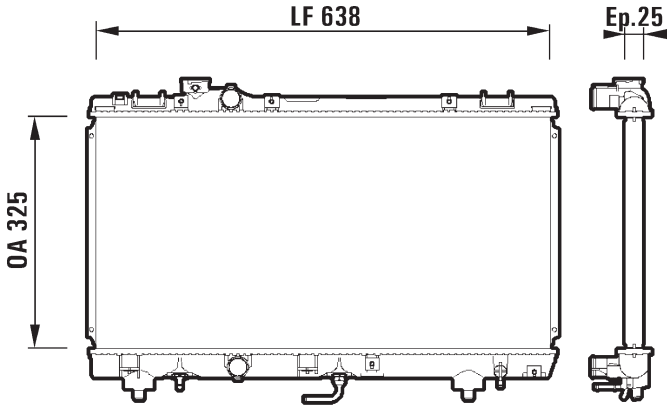


| | | |
|---|---|---|
| TOYOTA 1640011830 | 325x638x25 | 28mm L |
| | + | 28mm L |

## 734177 ALB

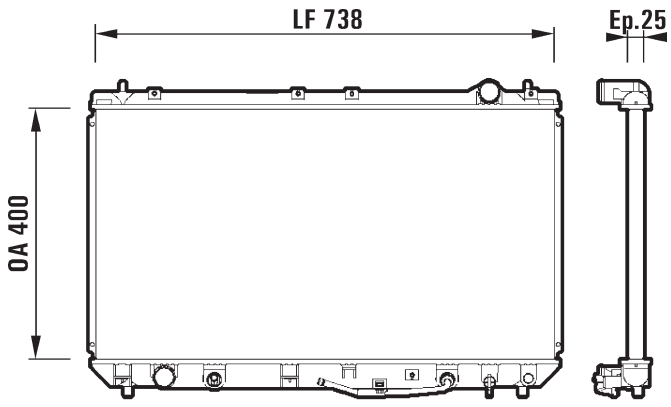


| | | |
|---|---|---|
| TOYOTA 1640020090 | 400x738x25 | 34mm L |
| | + | 34mm L |

## 734182 ALB

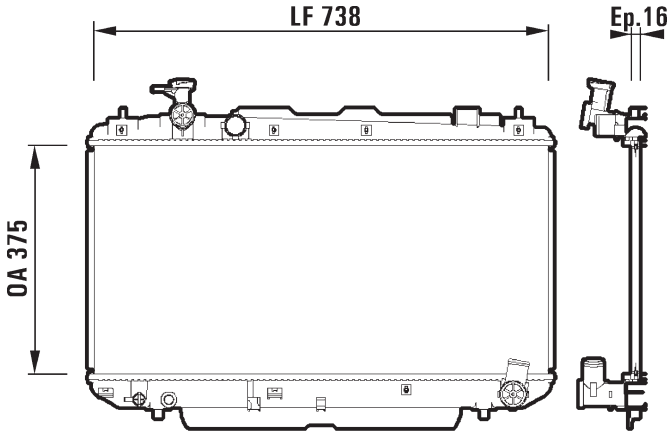


| | | |
|---|---|---|
| TOYOTA 1640022121 | 375x738x16 | 31mm L |
| | - | 31mm L |

## 734180 CBS

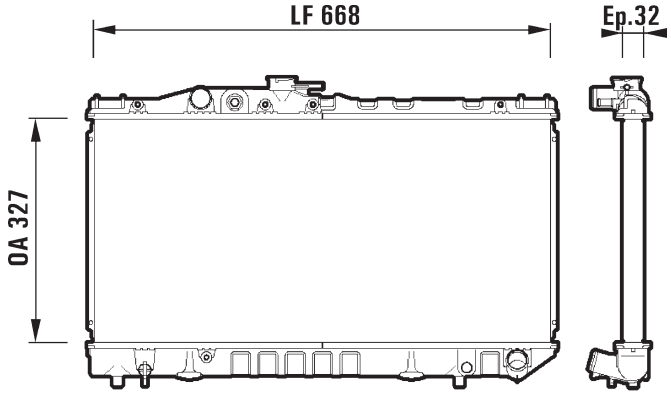


| | | |
|---|---|---|
| TOYOTA 1640074640 | 327x668x32 | 32mm L |
| | - | 32mm L |

## 734183 ALB

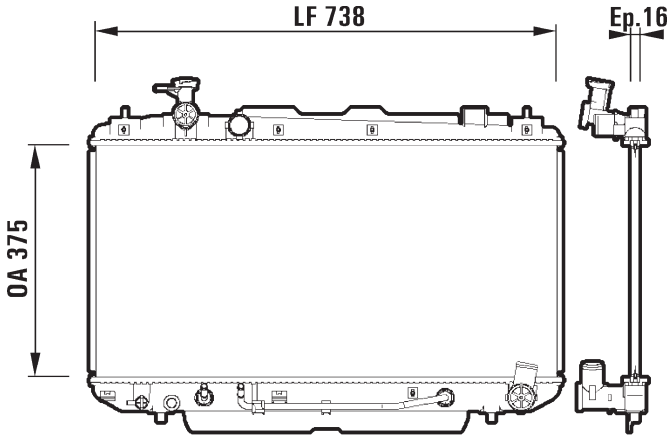


| | | |
|---|---|---|
| TOYOTA 1640028140 | 375x738x16 | 34mm L |
| | + | 34mm L |

## 734181 ALB

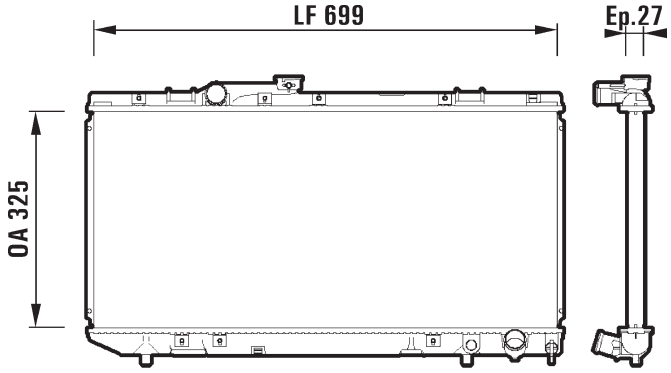


| | | |
|---|---|---|
| TOYOTA 1640074560 | 325x699x27 | 31mm L |
| | - | 31mm L |

## 734185 CBS

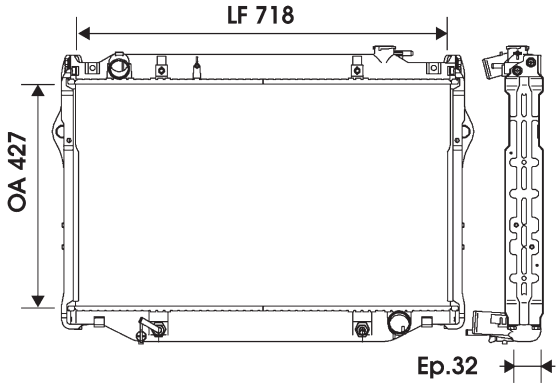


| | | |
|---|---|---|
| TOYOTA 1640066040 | 427x718x49 | 38mm L |
| | - | 42mm L |

## 734189 CBS

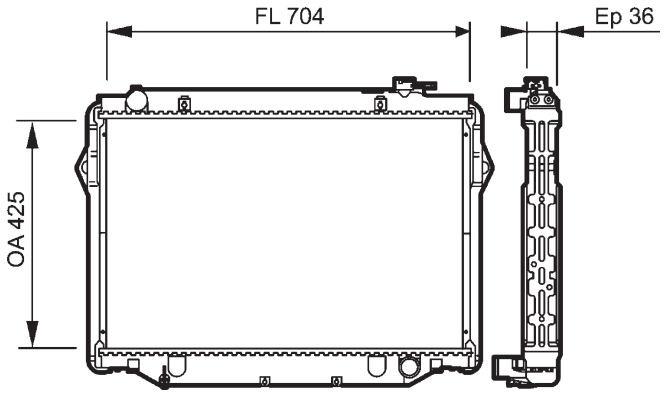


| | | |
|---|---|---|
| TOYOTA 1640017240 | 425x704x36 | 38mm L |
| - | | 38mm L |

## 734192 ALB

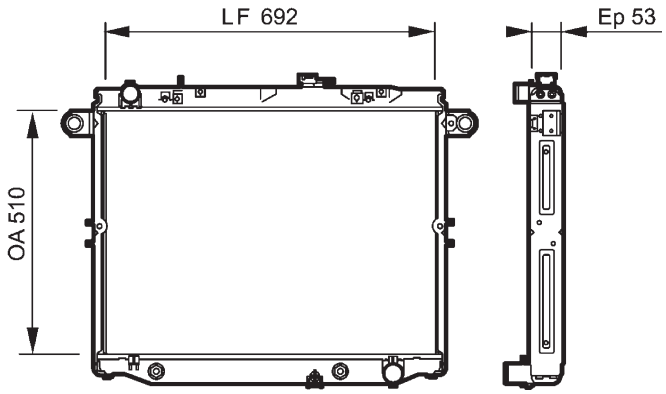


| | | |
|---|---|---|
| TOYOTA 1640050211 | 510x692x53 | 38mm L |
| + | | 38mm L |

## 734190 ALB

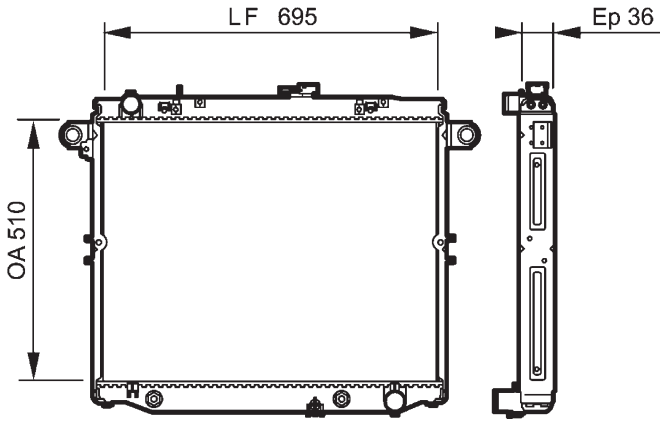


| | | |
|---|---|---|
| TOYOTA 1640066121 | 510x695x36 | 38mm L |
| + | | 38mm L |

## 734193 ALB

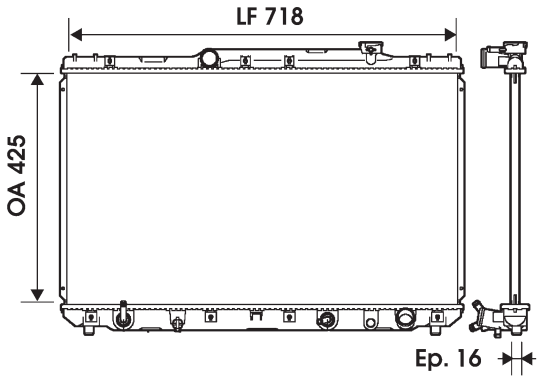


| | | |
|---|---|---|
| TOYOTA 1640003061 | 425x718x16 | |
| + | | 31mm L |

## 734191 ALB

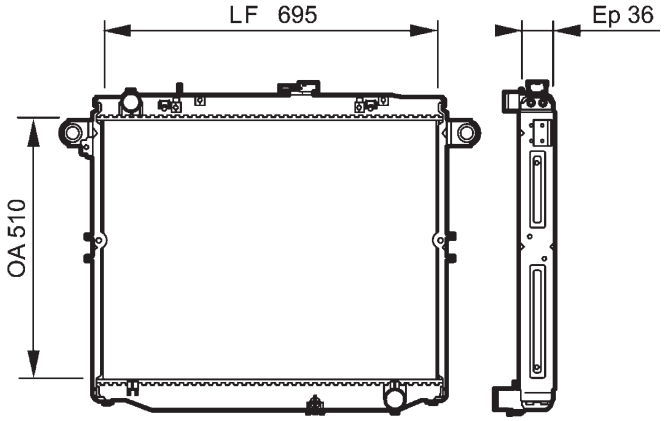


| | | |
|---|---|---|
| TOYOTA 1640066111 | 510x695x36 | 38mm L |
| - | | 38mm L |

## 734194 ALB

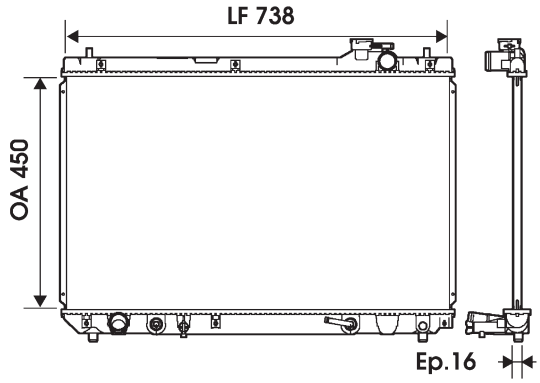


| | | |
|---|---|---|
| TOYOTA 1640028230 | 450x738x16 | |
| + | | 34mm L |

## 734196 ALB

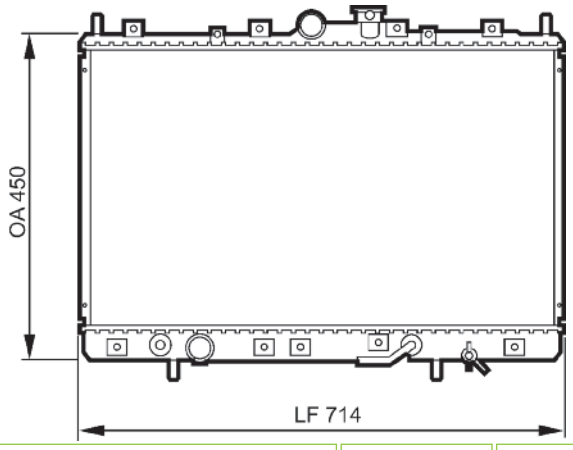


| | | | |
|---|---|---|---|
| MITSUBISHI | MR312099 | 450x718x16 | 35mm L |
| | | - | 35mm L |

## 734199 ALB

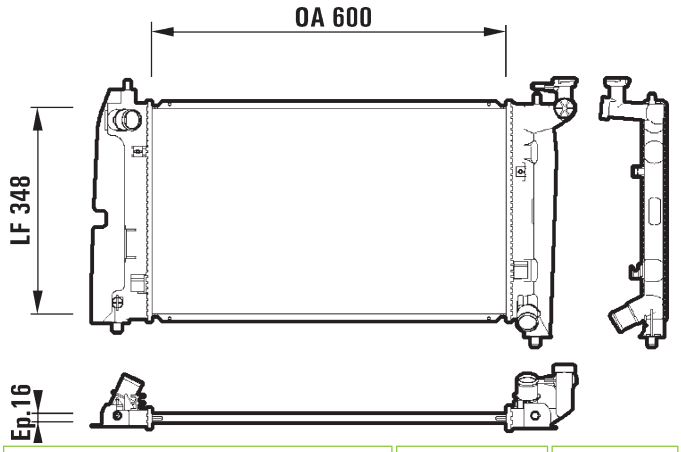


| | | | |
|---|---|---|---|
| TOYOTA | 1640027040 | 600x348x16 | 34mm L |
| | | - | 34mm L |

## 734197 ALB

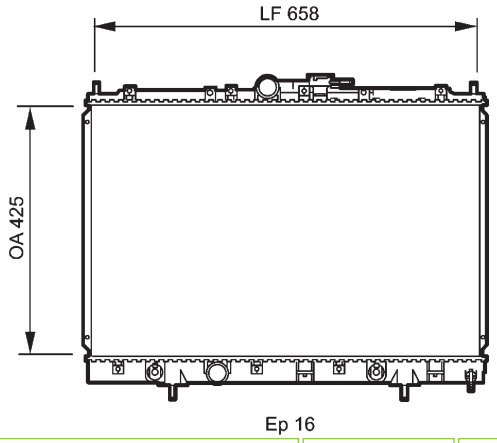


| | | | |
|---|---|---|---|
| MITSUBISHI | MR373172 | 425x658x16 | 35mm L |
| | | + | 35mm L |

## 734200 ALB

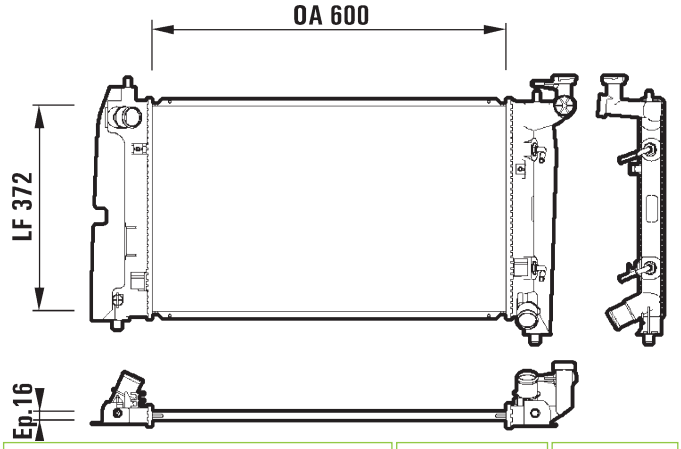


| | | | |
|---|---|---|---|
| TOYOTA | 1640021180 | 600x372x16 | 34mm L |
| | | + | 34mm L |

## 734198 ALB

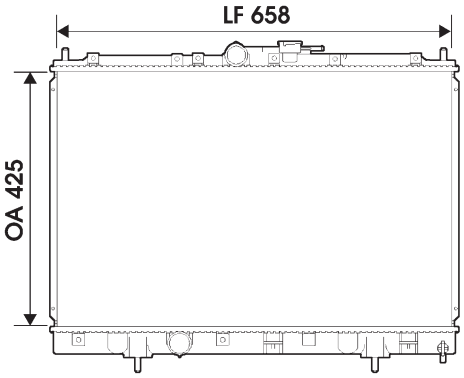


| | | | |
|---|---|---|---|
| MITSUBISHI | MR431239 | 425x658x16 | 35mm L |
| | | - | 35mm L |

## 734201 ALB

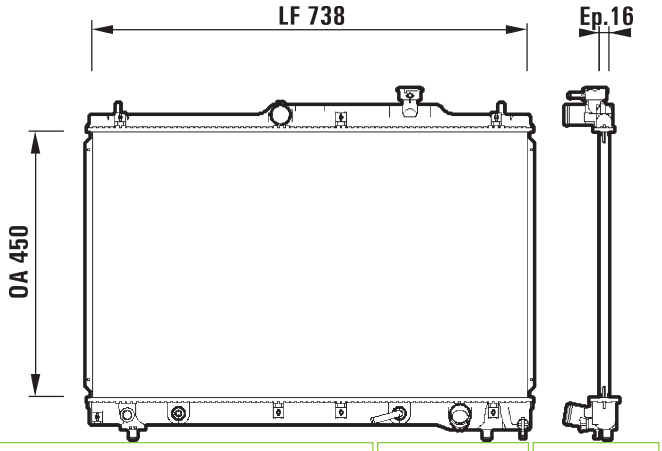


| | | | |
|---|---|---|---|
| TOYOTA | 1640028100 | 450x738x16 | 34mm L |
| | | + | 34mm L |

## 734203 CBS

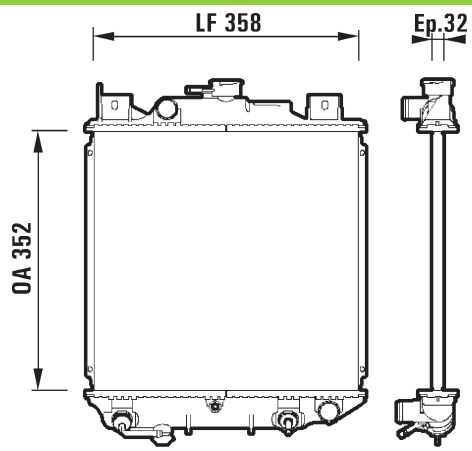


| | | |
|---|---|---|
| SUZUKI 1770063E20 | 352x358x32 | |
| + | | 28mm L |

## 734206 ALB

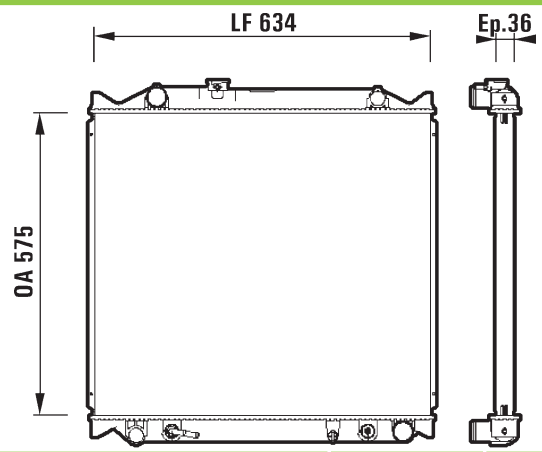


| | | |
|---|---|---|
| TOYOTA 1640067140 | 575x634x36 | 38mm L |
| + | | 38mm L |

## 734204 ALB

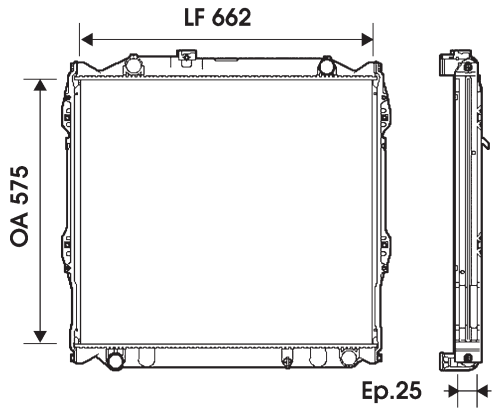


| | | |
|---|---|---|
| TOYOTA 1640075160 | 575x662x25 | 34mm L |
| - | | 34mm L |

## 734207 ALB

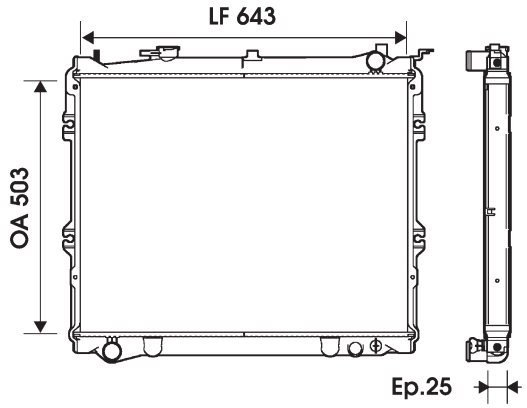


| | | |
|---|---|---|
| MAZDA JEA315200B | 503x643x25 | 35mm L |
| - | | 35mm L |

## 734205 ALB

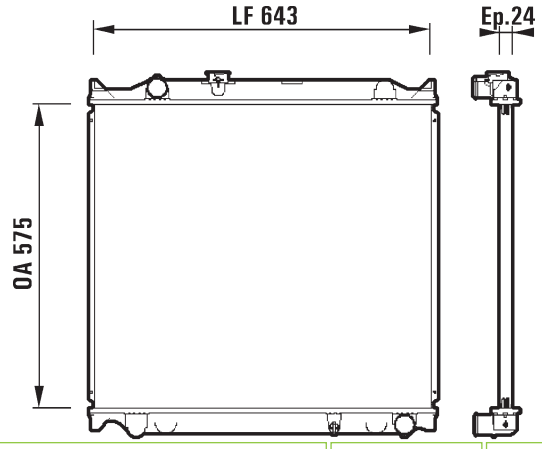


| | | |
|---|---|---|
| TOYOTA 1640067130 | 575x643x24 | 38mm L |
| - | | 38mm L |

## 734208 ALB

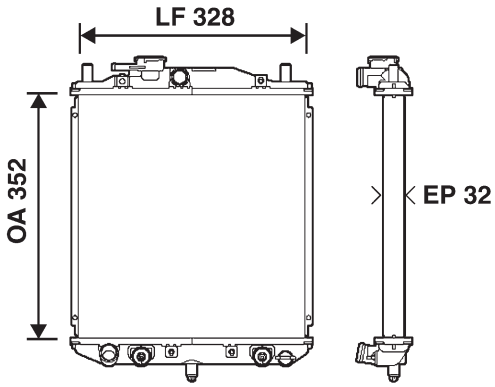


| | | |
|---|---|---|
| DAIHATSU 1640087294000 | 352x328x32 | 25mm L |
| + | | 25mm L |

## 734209 ALB

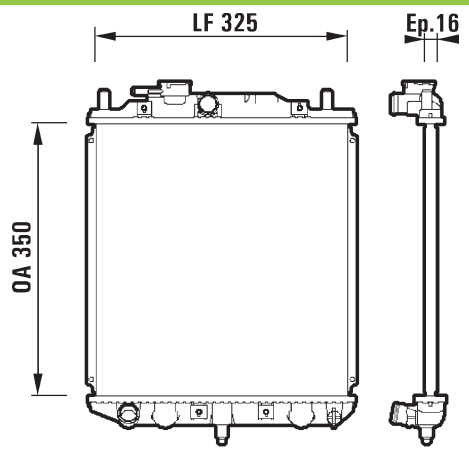


| | | |
|---|---|---|
| DAIHATSU 1640087286000 | 350x325x16 | 25mm L |
| + | | 25mm L |

## 734212 ALB

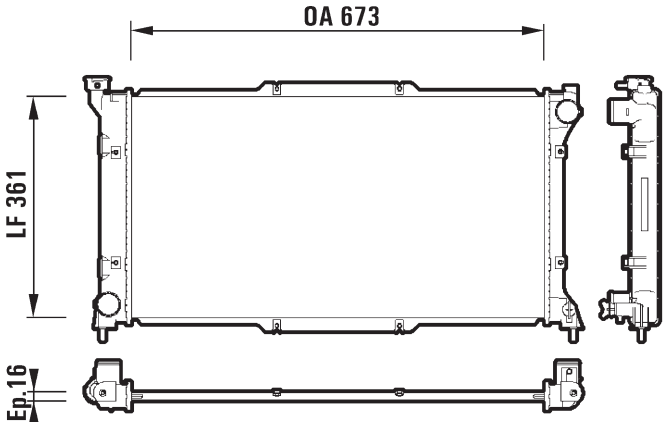


| | | |
|---|---|---|
| SUBARU 45199AC041 | 673x361x16 | 38mm L |
| - | | 38mm L |

## 734210 ALB

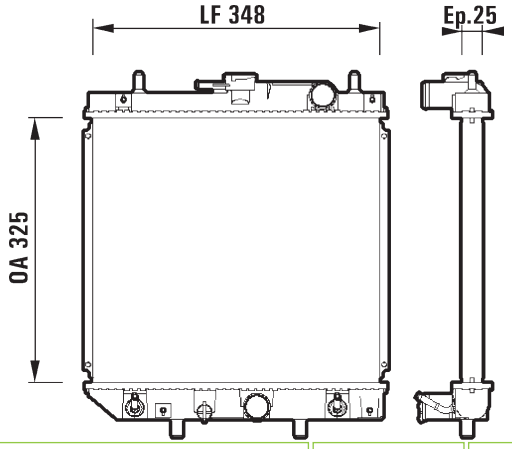


| | | |
|---|---|---|
| DAIHATSU 1640087F47000 | 325x348x25 | |
| + | | 32mm L |

## 734213 ALB

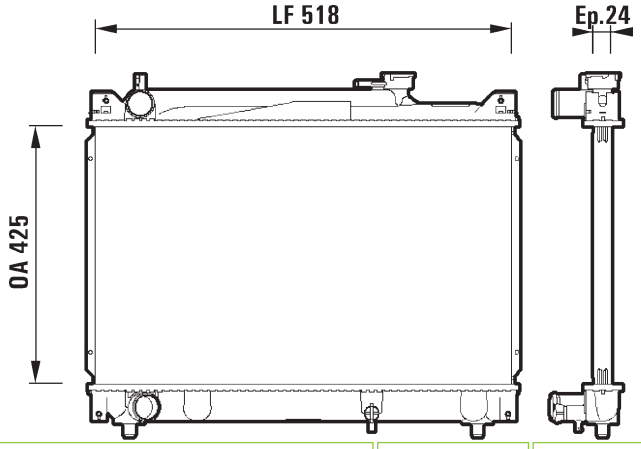


| | | |
|---|---|---|
| SUZUKI 1770077E20 | 425x518x25 | 34mm L |
| - | | 34mm L |

## 734211 ALB

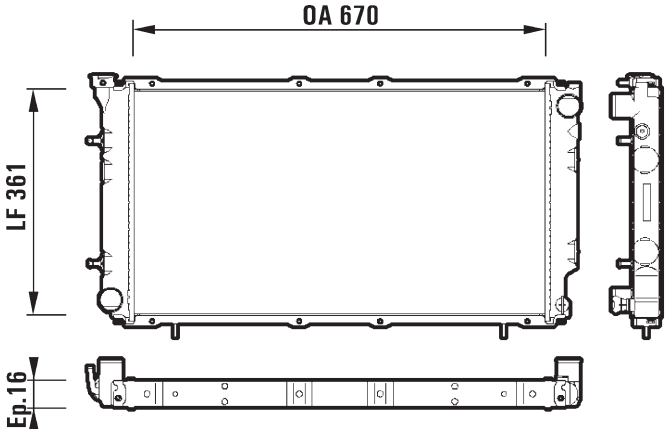


| | | |
|---|---|---|
| SUBARU 45199AA121 | 670x361x16 | 38mm L |
| + | | 38mm L |

## 734214 CBS

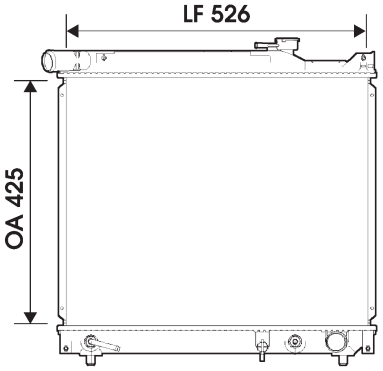


| | | |
|---|---|---|
| SUZUKI 1770078E10 | 425x518x25 | 34mm L |
| + | | 34mm L |

## 734215 ALB

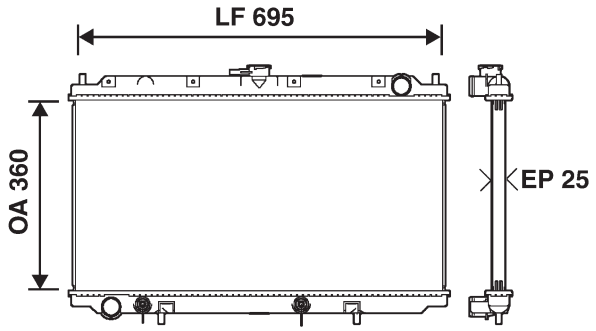


| | | |
|---|---|---|
| NISSAN 214609F511 | 360x695x25 | 35mm L |
| + | | 35mm L |

## 734218 ALB

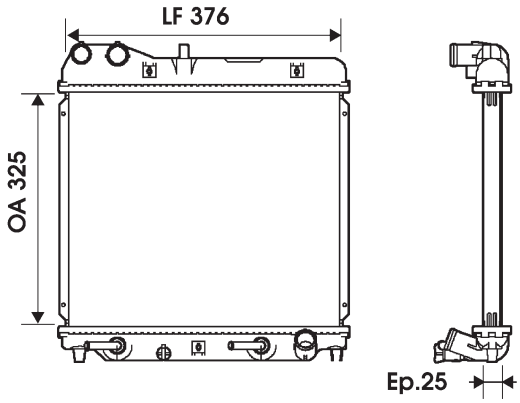


| | | |
|---|---|---|
| HONDA 19010PWAG01 | 325x376x25 | L |
| + | | 28mm L |

## 734216 ALB

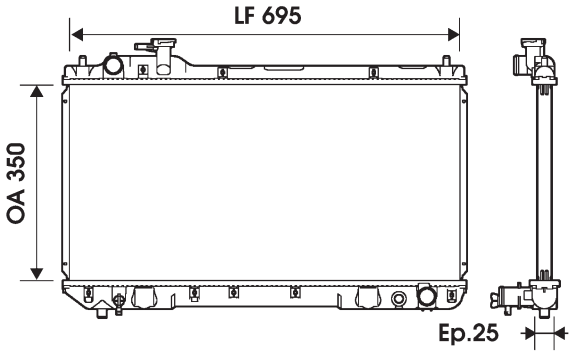


| | | |
|---|---|---|
| TOYOTA 164007A490 | 350x695x25 | 31mm L |
| - | | 31mm L |

## 734219 ALB

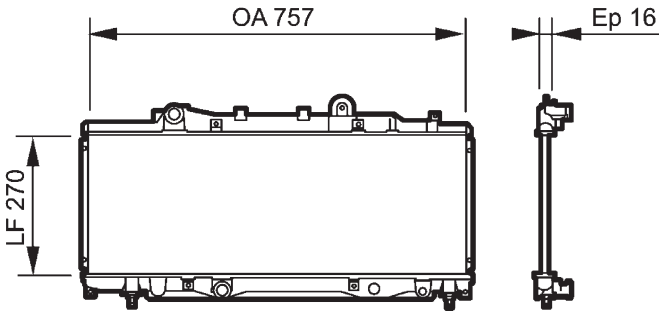


| | | |
|---|---|---|
| FIAT 46473867 | 270x757x16 | 28mm L |
| - | | 28mm L |

## 734217 CBS

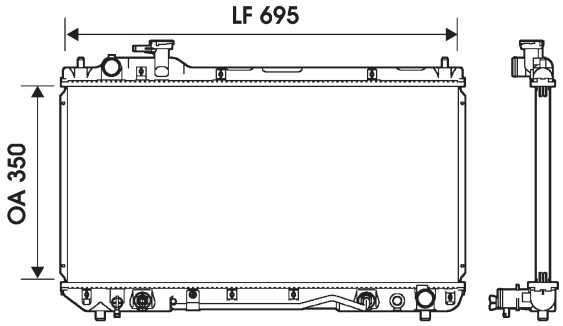


| | | |
|---|---|---|
| TOYOTA 164007A500 | 350x695x25 | |
| + | | 34mm L |

## 734221 ALM

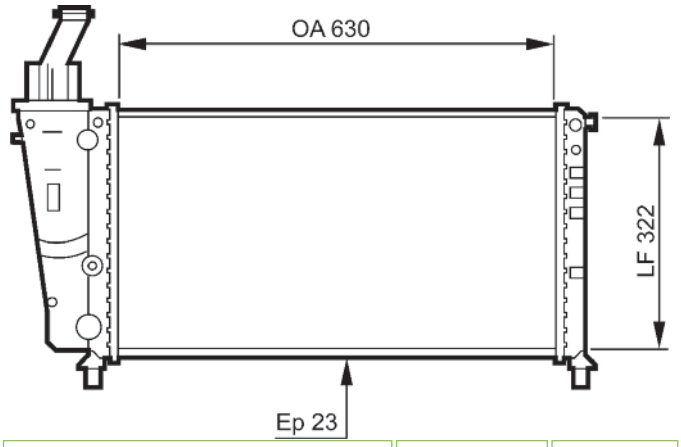


| | | |
|---|---|---|
| FIAT 46527489<br>LANCIA 46527489 | 630x322x23 | 28mm L |
| - | | 28mm L |

## 734224 ALB

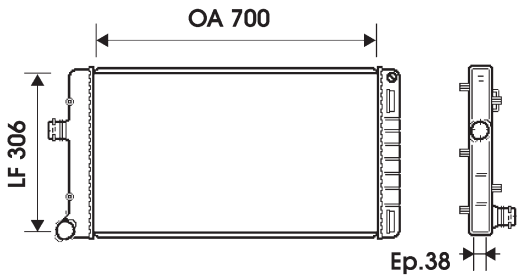


| | | | |
|---|---|---|---|
| FIAT | 46739749 | 700x306x38 | 35mm QC |
| | | | 35mm QC |

## 734229 RM1511 ALM

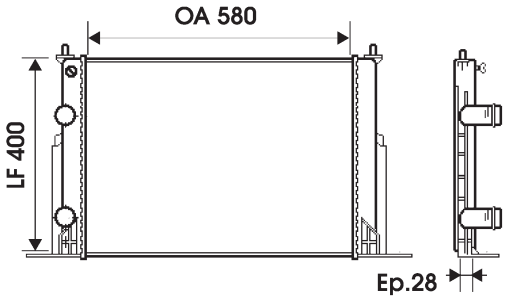


| | | | |
|---|---|---|---|
| FIAT | 46745809 | 580x400x34 | 35mm L |
| | | | 35mm L |

## 734225 ALM

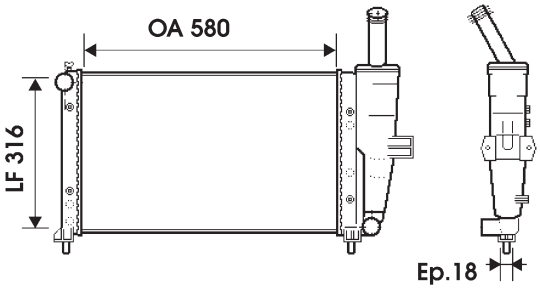


| | | | |
|---|---|---|---|
| FIAT | 46788046 | 580x316x18 | 30mm L |
| | | | 30mm L |

## 734230 RA2026

Picture not available
Image non disponible
Imagen no disponible
Immagine non disponibile
Nicht verfügbares Bild
Brak zdjęcia
Картина недоступна

| | | | |
|---|---|---|---|
| IVECO | 500396428 | | |
| | | | |

## 734228 ALB

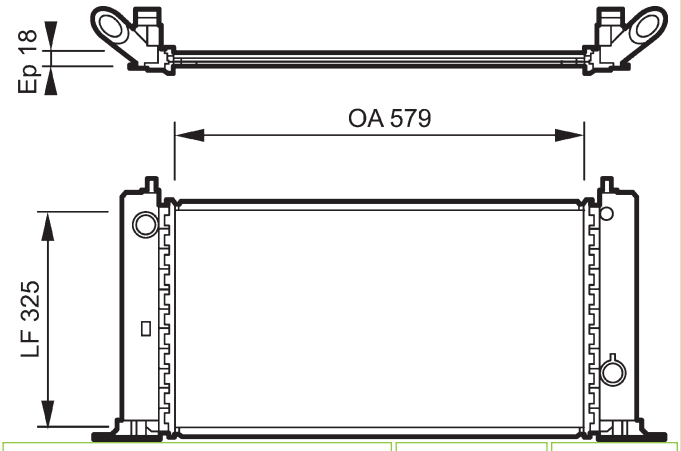


| | | | |
|---|---|---|---|
| FIAT | 46799894 | 579x325x18 | 35mm L |
| | | | 35mm L |

## 734231 RM2011

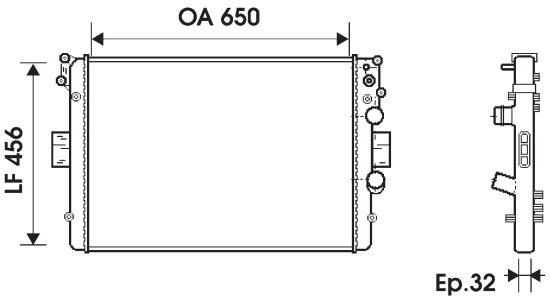


| | | | |
|---|---|---|---|
| IVECO | 504008110 | 645x470x34 | |
| | | | |

## 734235 ALB

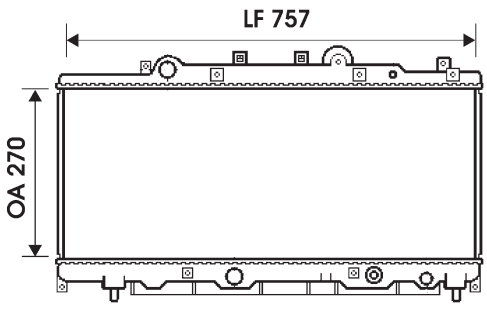


| | | | |
|---|---|---|---|
| LANCIA 46472572 | 270x757x16 | 28mm L | |
| | | | 28mm L |

## 734238 ALM

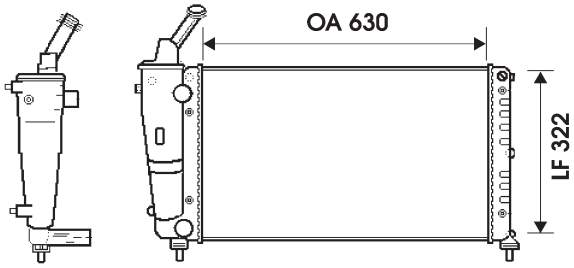


| | | | |
|---|---|---|---|
| LANCIA 46763325 | 630x322x23 | 28mm L | |
| | | | 28mm L |

## 734236 ALM

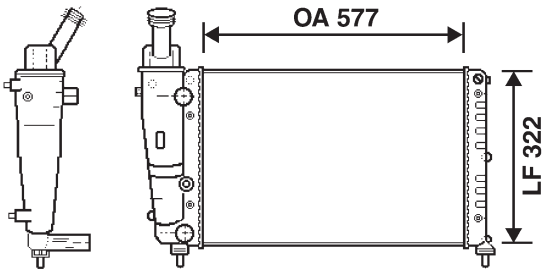


| | | | |
|---|---|---|---|
| LANCIA 71736189 | 577x322x23 | 28mm L | |
| | | | 28mm L |

## 734239 ALM

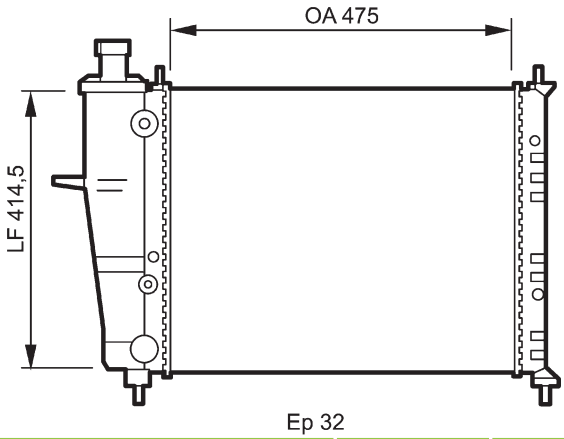


| | | | |
|---|---|---|---|
| FIAT 7776507 | 475x414,5x32 | 35mm L | |
| | | | 35mm L |

## 734237 ALM

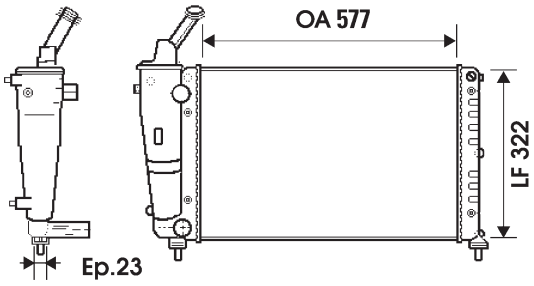


| | | | |
|---|---|---|---|
| LANCIA 46763322 | 577x322x23 | 28mm L | |
| | | | 28mm L |

## 734242 RAB046 ALB

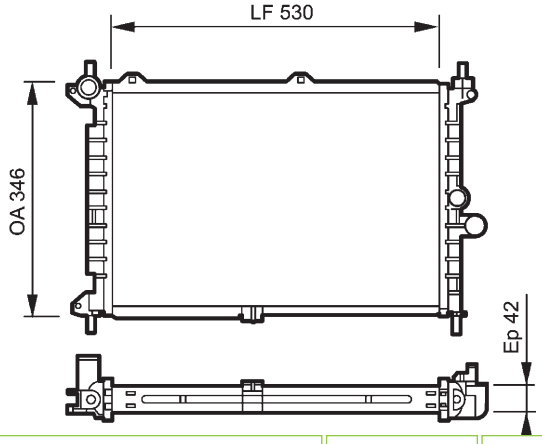


| | | | |
|---|---|---|---|
| VAUXHALL 90541496 | 530x346x42 | 34mm L | |
| | | | 34mm L |

## 734246 ALB

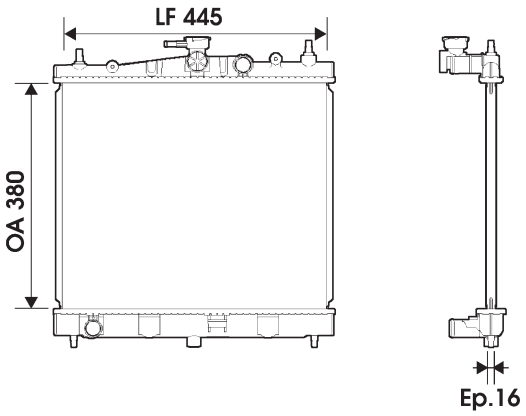


| | | |
|---|---|---|
| NISSAN 21400AX600<br>RENAULT 8200365427 | 380x445x16 | 28mm L |
| - | | 28mm L |

## 734249 ALB

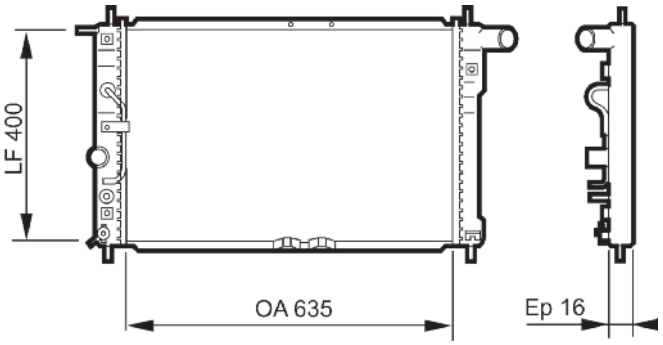


| | | |
|---|---|---|
| DAEWOO 96182260 | 635x400x16 | 34mm L |
| + | | 34mm L |

## 734247 ALB

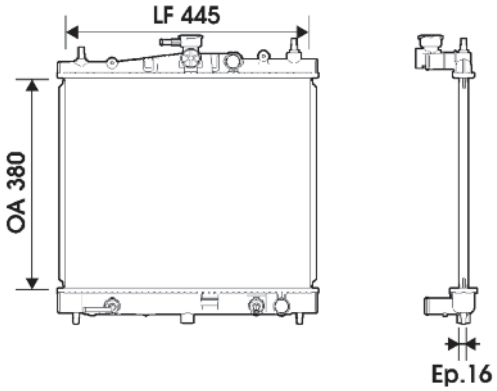


| | | |
|---|---|---|
| NISSAN 21460AX800 | 380x445x16 | 28mm L |
| + | | 28mm L |

## 734250 ALB

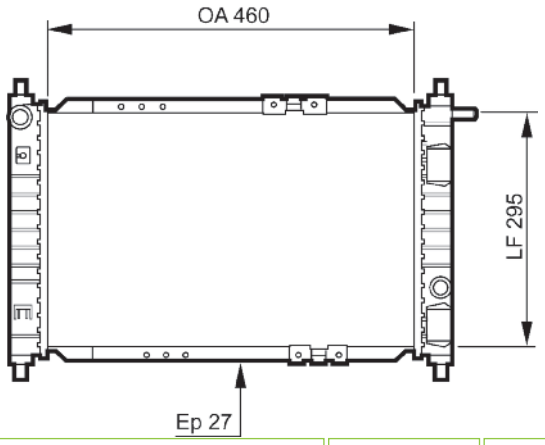


| | | |
|---|---|---|
| DAEWOO 96314162 | 460x295x27 | 28mm L |
| - | | 28mm L |

## 734248 ALB

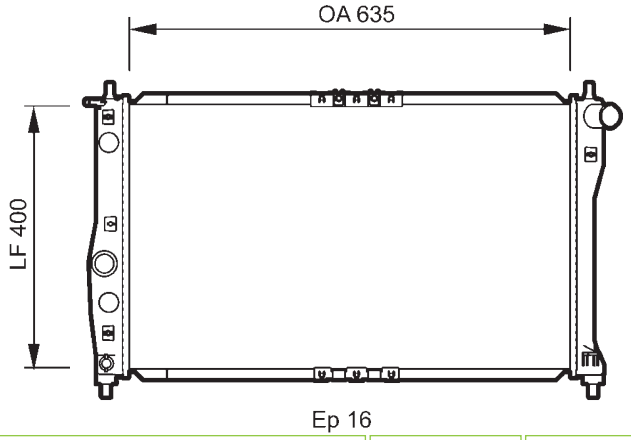


| | | |
|---|---|---|
| DAEWOO 96182261 | 635x400x16 | 34mm L |
| - | | 34mm L |

## 734251 ALB

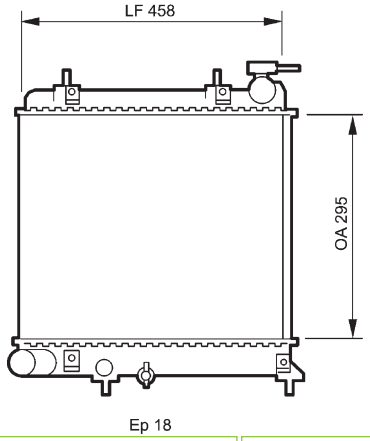


| | | |
|---|---|---|
| DAEWOO 96322941 | 458x295x18 | 28mm L |
| - | | 28mm L |

## 734252 ALB

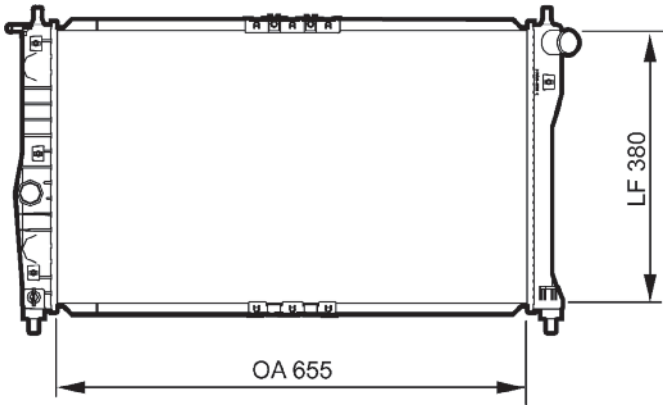


| | | |
|---|---|---|
| DAEWOO 96181369 | 655x380x16 | 34mm L |
| - | | 34mm L |

## 734255 RAB019 ALB

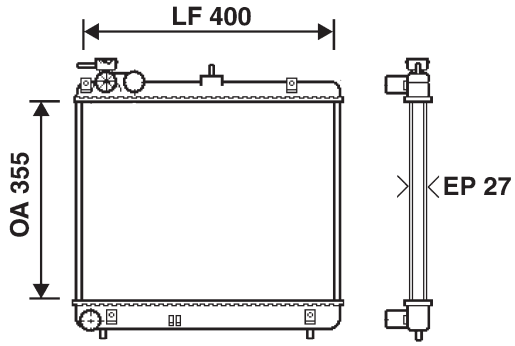


| | | |
|---|---|---|
| HYUNDAI 2531002100 | 355x400x27 | 28mm L |
| - | | 28mm L |

## 734253 CBS

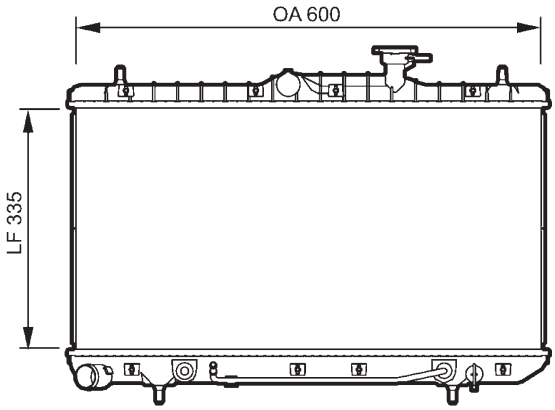


Ep 16

| | | |
|---|---|---|
| HYUNDAI 2531025100 | 335x600x16 | 33mm L |
| + | | 33mm L |

## 734256 ALB

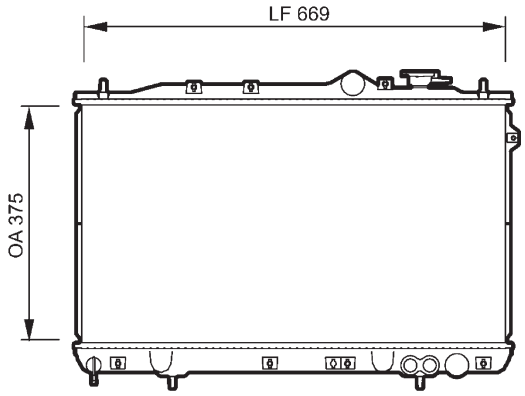


Ep 16

| | | |
|---|---|---|
| HYUNDAI 2531028050 | 375x669x16 | 35mm L |
| - | | 35mm L |

## 734254 ALB

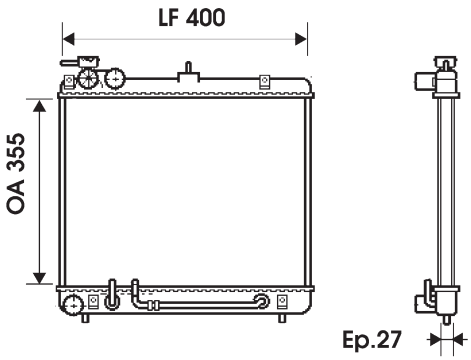


| | | |
|---|---|---|
| HYUNDAI 2531002151 | 355x400x27 | 28mm L |
| + | | 28mm L |

## 734258 ALB

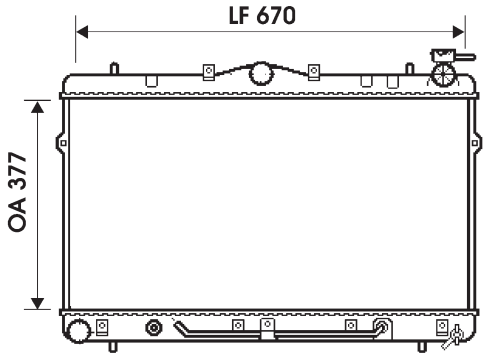


| | | |
|---|---|---|
| HYUNDAI 2531029750 | 377x670x16 | 32mm L |
| + | | 32mm L |

## 734259 ALB

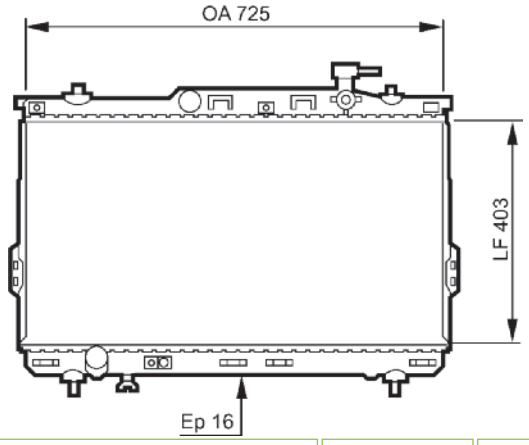


| | | |
|---|---|---|
| HYUNDAI 2531026000 | 420x735x19 | 35mm L |
| - | | 35mm L |

## 734263

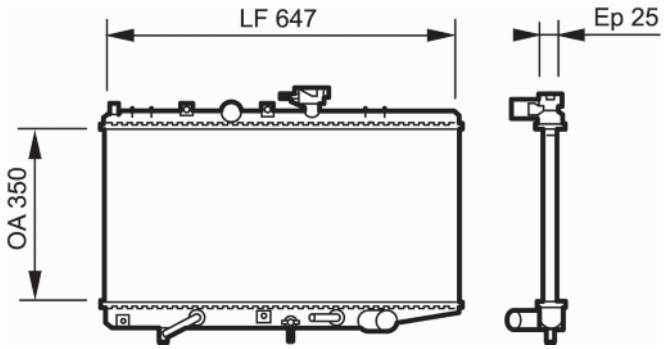


| | | |
|---|---|---|
| KIA 0K30C15200B | 350x647x25 | 31mm L |
| - | | 31mm L |

## 734261 ALB

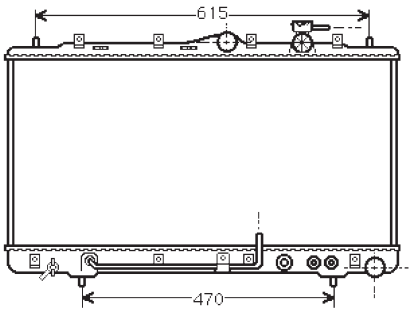


| | | |
|---|---|---|
| HYUNDAI 2531034050 | 400x675x27 | 35mm L |
| + | | 35mm L |

## 734264 ALB

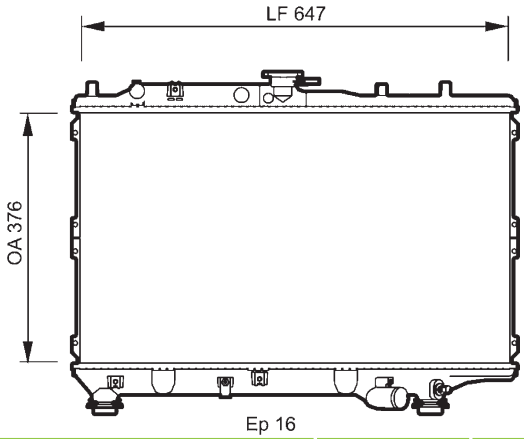


| | | |
|---|---|---|
| KIA 0K20115200B | 376x647x16 | 31mm L |
| - | | 31mm L |

## 734262 ALB

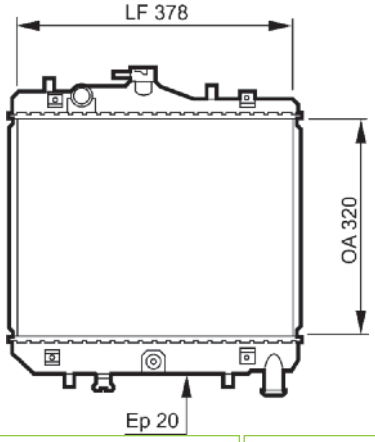


| | | |
|---|---|---|
| KIA KK33115200 | 320x378x20 | 28mm L |
| - | | 28mm L |

## 734265 ALB

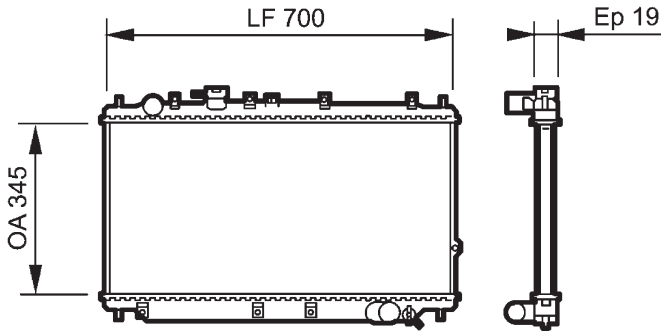


| | | |
|---|---|---|
| KIA 0K2A215200B | 345x700x19 | 33mm L |
| + | | 33mm L |

## 734266

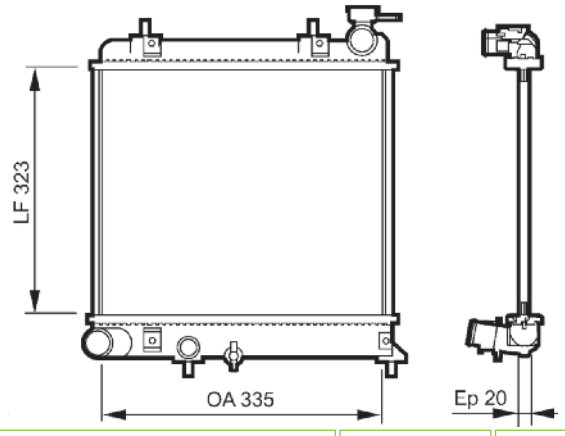


| | | | |
|---|---|---|---|
| HYUNDAI | 2531025050 | 335x323x20 | 33mm L |
| | | - | 33mm L |

## 734269 ALM

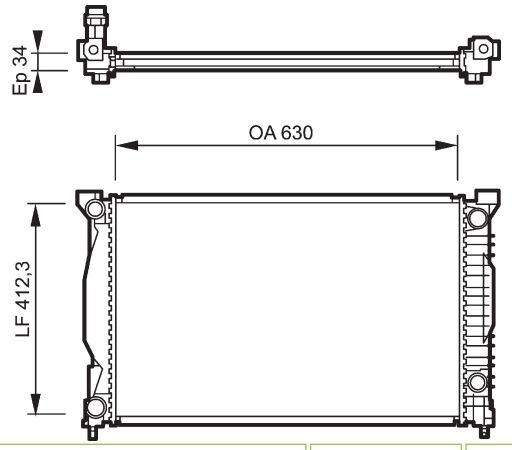


| | | | |
|---|---|---|---|
| AUDI | 8E0121251L | 630x412,3x34 | 32mm QC |
| | | - | 32mm QC |

## 734267 CBS

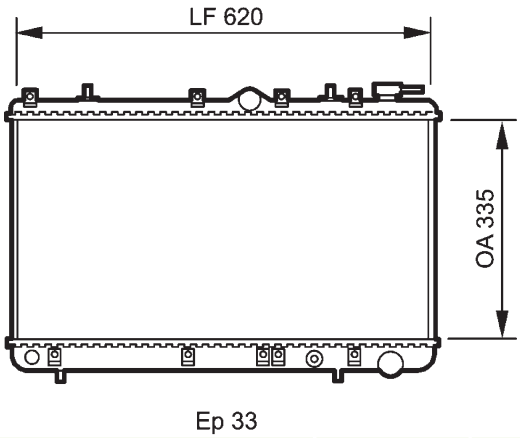


| | | | |
|---|---|---|---|
| HYUNDAI | 2531024002 | 335x620x33 | 28mm L |
| | | - | 35mm L |

## 734270 ALM

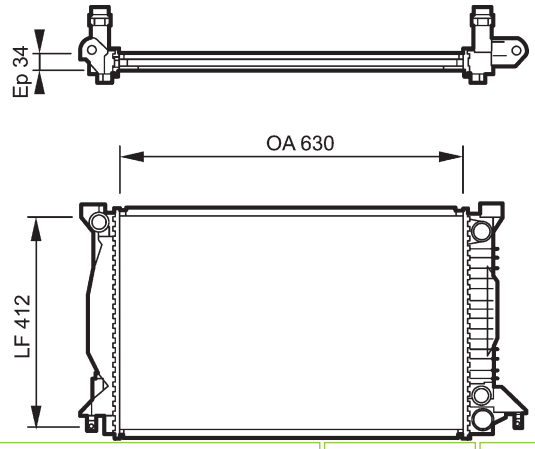


| | | | |
|---|---|---|---|
| AUDI | 8E0121251Q | 630x412x34 | 32mm QC |
| | | - | 32mm QC |

## 734268 ALM

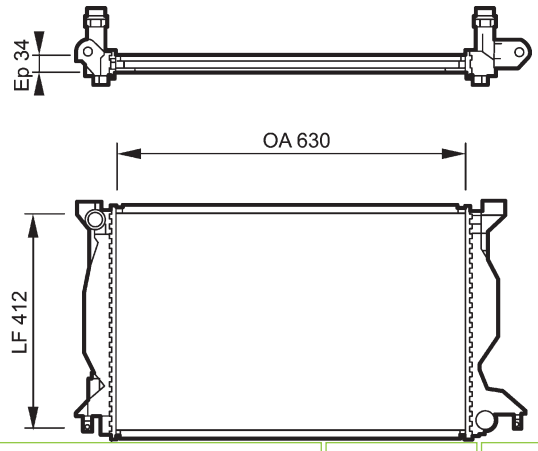


| | | | |
|---|---|---|---|
| AUDI | 8E0121251J | 630x412x34 | 32mm QC |
| | | - | 32mm QC |

## 734271 ALB

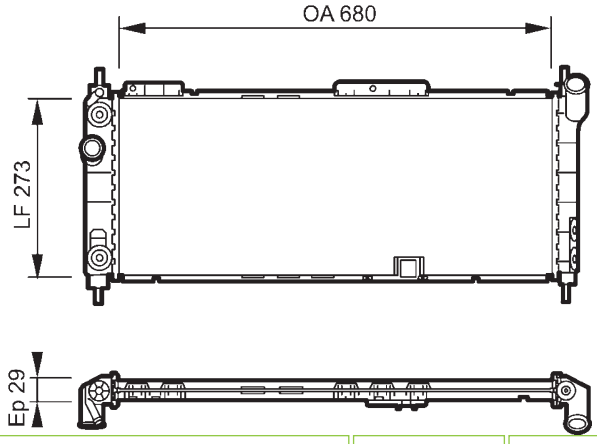


| | | | |
|---|---|---|---|
| OPEL<br>VAUXHALL | 1300153<br>52459322 | 680x273x29 | 34mm L |
| | | + | 34mm L |

## 734272 RM1755 ALB

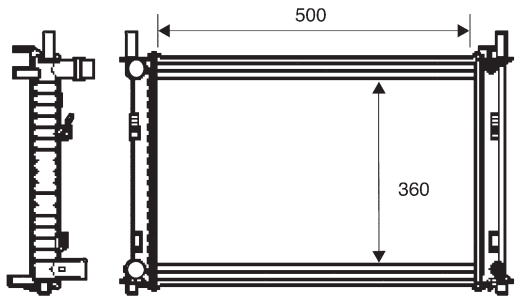


| | | |
|---|---|---|
| FORD 1325832 | 508x377,5x23 | 27mm L |
| | | 26,5mm QC |

## 734273 ALB

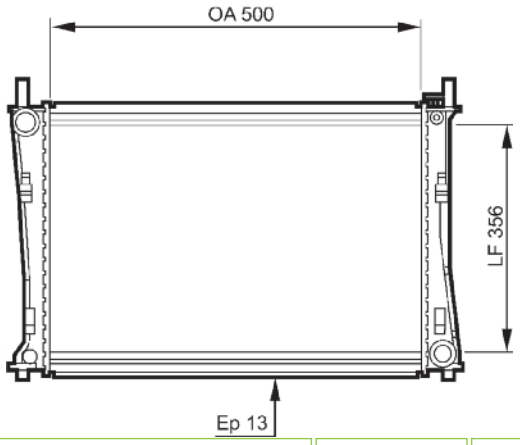


| | | |
|---|---|---|
| FORD 1325831<br>MAZDA C20115200 | 500x356x13 | 32mm QC |
| | | 32mm L |

## 734274 RM1756 ALB

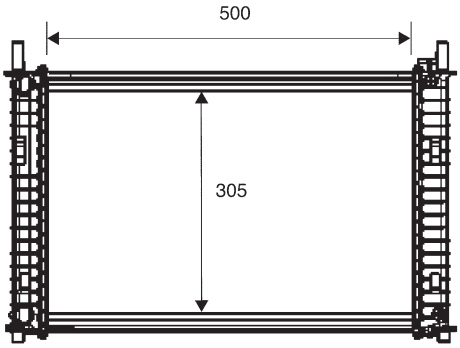


| | | |
|---|---|---|
| FORD 1359798<br>MAZDA Y40115200 | 508x377,5x34 | 27mm QC |
| | | 26,5mm L |

## 734276 RAB009 ALB

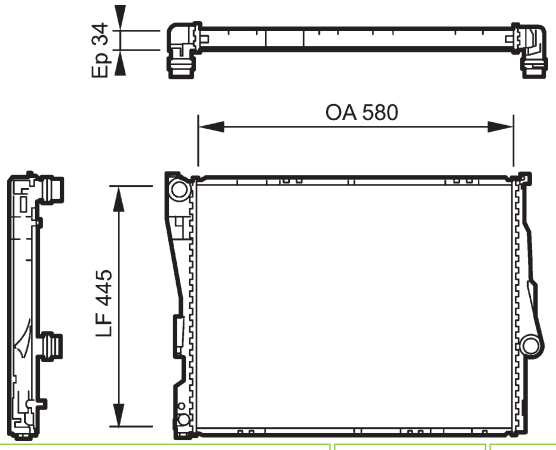


| | | |
|---|---|---|
| BMW 17119071518 | 580x445x34 | 38mm QC |
| | | 38mm QC |

## 734277 ALB

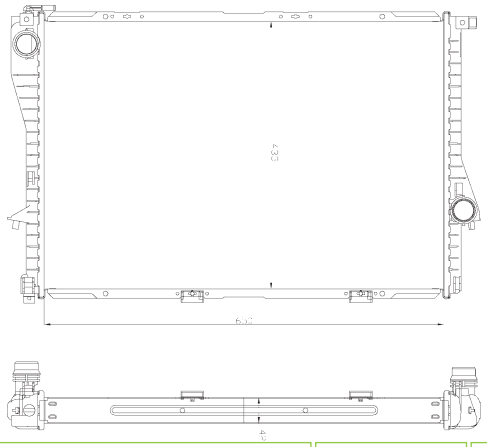

| | | |
|---|---|---|
| BMW 17111436060 | 650x438x34 | 40mm QC |
| | | 40mm QC |

## 734278 ALB

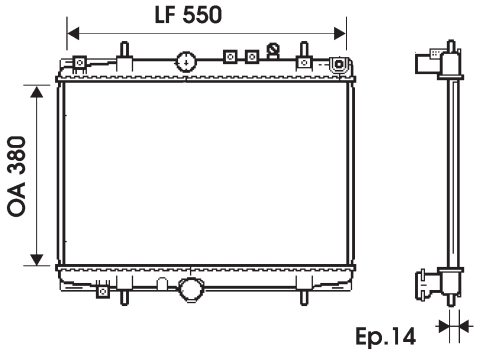


| | | |
|---|---|---|
| CITROEN 133068<br>PEUGEOT 133068 | 380x550x14 | 32mm L |
| | | 42mm QC |

## 734279 ALB

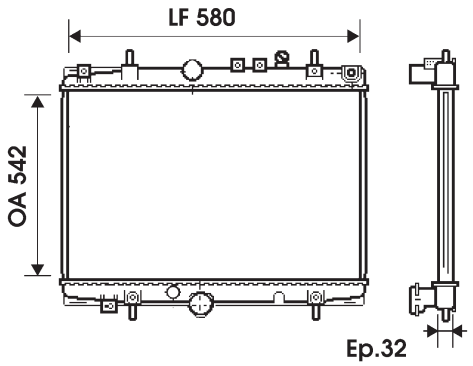


| | | |
|---|---|---|
| CITROEN 1330R2<br>PEUGEOT 1330R2 | 542x580x32 | 32mm L |
| | - | 42mm QC |

## 734282 ALB

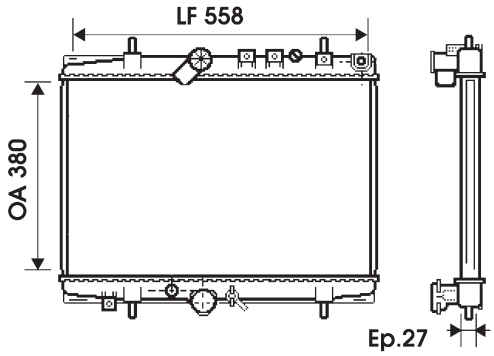


| | | |
|---|---|---|
| CITROEN 1330Q6<br>PEUGEOT 133079 | 380x558x27 | 32mm L |
| | - | 42mm QC |

## 734280 ALB

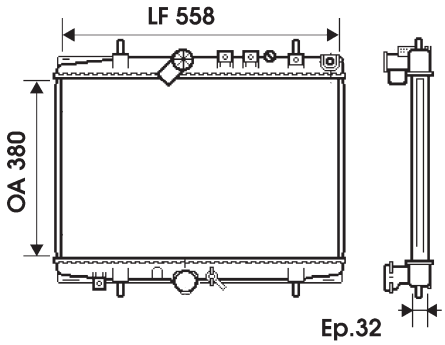


| | | |
|---|---|---|
| CITROEN 133078<br>PEUGEOT 133078 | 380x558x32 | 32mm L |
| | - | 42mm QC |

## 734283 ALB

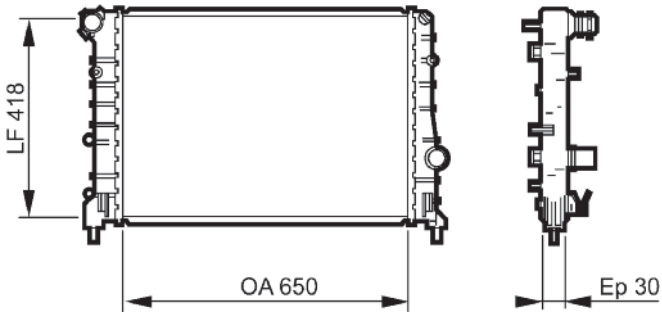


| | | |
|---|---|---|
| ALFA ROMEO 46842846 | 580x425x30 | 35mm QC |
| | - | 35mm L |

## 734281 ALB

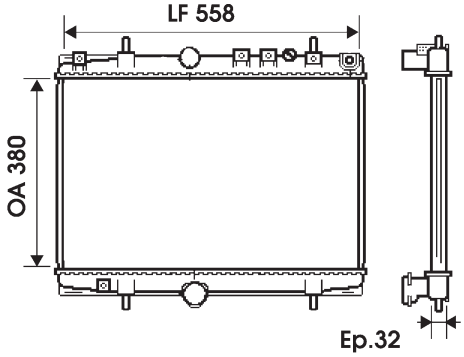


| | | |
|---|---|---|
| CITROEN 1330R1 | 380x558x32 | 32mm L |
| | - | 42mm QC |

## 734284 ALB

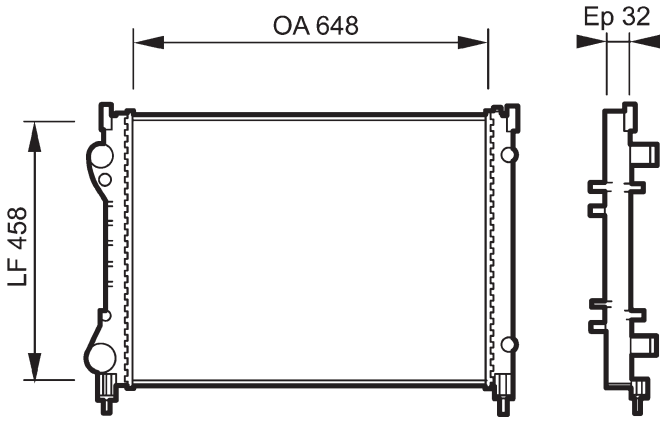


| | | |
|---|---|---|
| RENAULT 6025313331 | 648x458x32 | 32mm L |
| | - | 32mm L |

## 734285 ALB

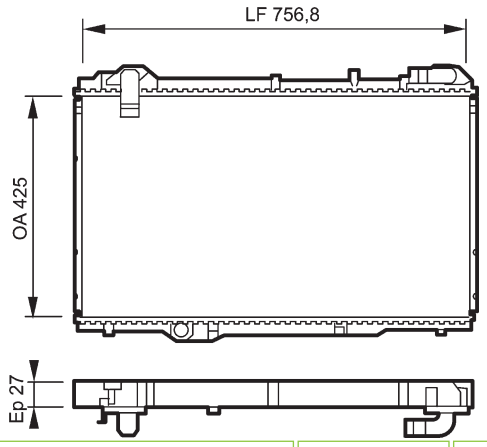


| | | |
|---|---|---|
| RENAULT 6025306734 | 425x756,8x27 | |
| | | |

## 734286 ALB

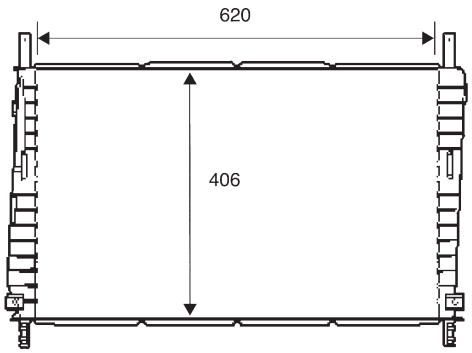


| | | |
|---|---|---|
| FORD 1142808 | 620x406x19 | 34mm L |
| | | 34mm L |

## 734287 ALB

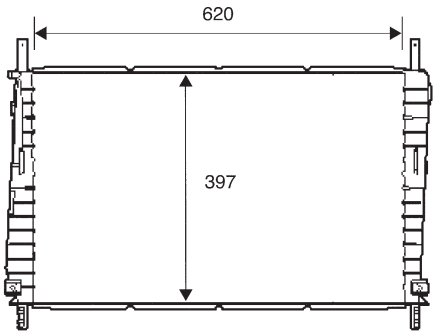


| | | |
|---|---|---|
| FORD 1142810 | 620x397x26 | |
| | | L |

## 734288 RAB006 ALB

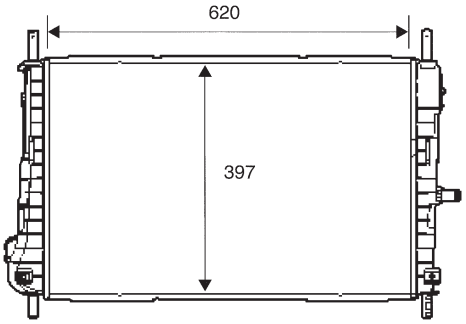


| | | |
|---|---|---|
| FORD 1142812 | 620x397x26 | 34mm L |
| | | 34mm L |

## 734289 RAB010 ALB

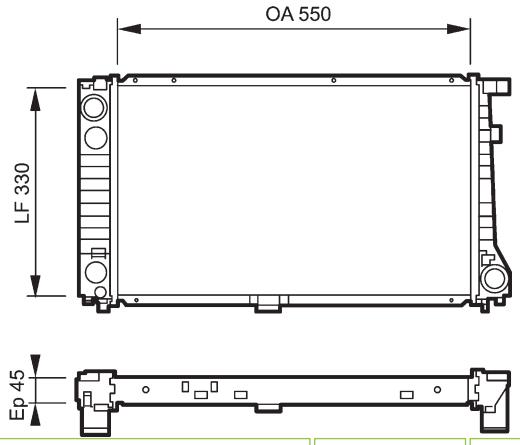


| | | |
|---|---|---|
| BMW 17112245511 | 550x330x45 | 40mm L |
| | | 40mm L |

## 734290 CBS

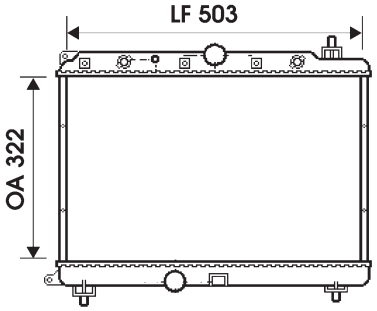


| | | |
|---|---|---|
| HONDA 19010PFTE00<br>MG PCC105520<br>ROVER GRD933 | 322x503x29 | 32mm L |
| | | 32mm L |

## 734291 RAB011 ALB

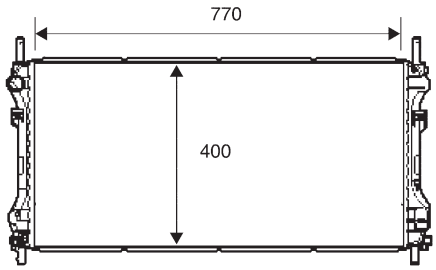


| | | |
|---|---|---|
| FORD 4596740 | 770x400x26 | 33mm L |
| | | 33mm L |

## 734292 RAB007 ALB

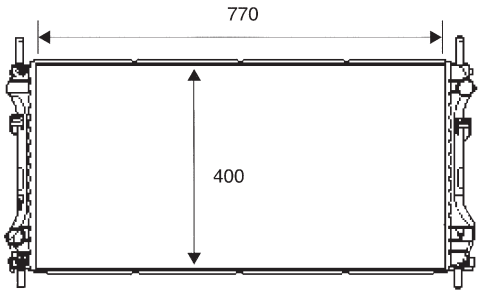


| | | |
|---|---|---|
| FORD 4572061 | 770x400x26 | 33mm L |
| | | 33mm L |

## 734293 RAB012 ALB

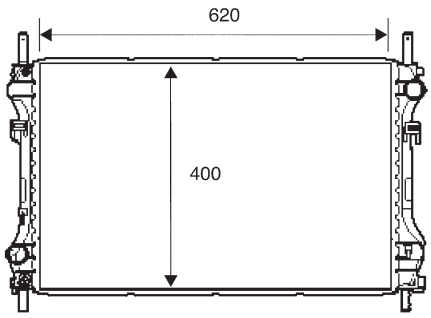


| | | |
|---|---|---|
| FORD 4596701 | 620x400x26 | 33mm L |
| | | 33mm L |

## 734301 ALB

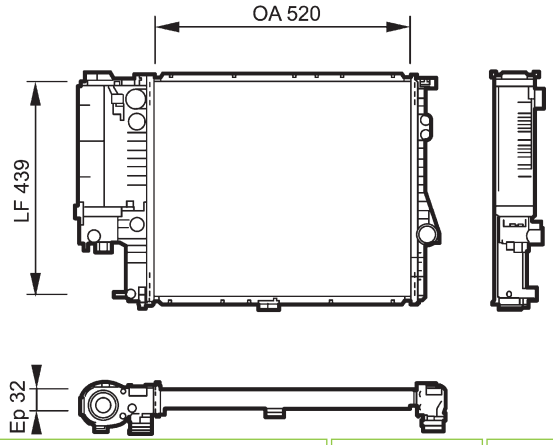


| | | |
|---|---|---|
| BMW 17111740699 | 520x439x32 | 40mm L |
| | | 40mm L |

## 734302 RA1312 ALB

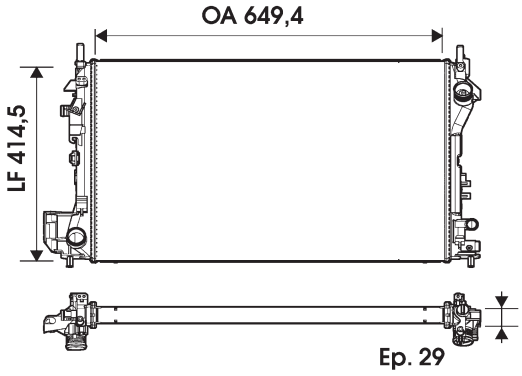


| | | |
|---|---|---|
| OPEL 1300251<br>VAUXHALL 13108569 | 649x414,5x34 | |
| | | L |

## 734303 RAB008 ALB

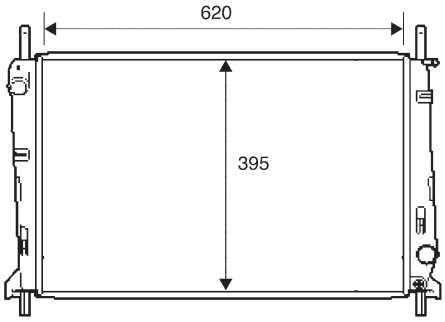


| | | |
|---|---|---|
| FORD 1036597 | 620x395x26 | 33mm L |
| | | 33mm QC |

## 734318 RA1416 ALB

Picture not available
Image non disponible
Imagen no disponible
Immagine non disponibile
Nicht verfügbares Bild
Brak zdjęcia
Картина недоступна

| | | | |
|---|---|---|---|
| MERCEDES | 1715000003 | 406,3x649,4x42 | |
| | | - | |

## 734319 RM2019 ALB

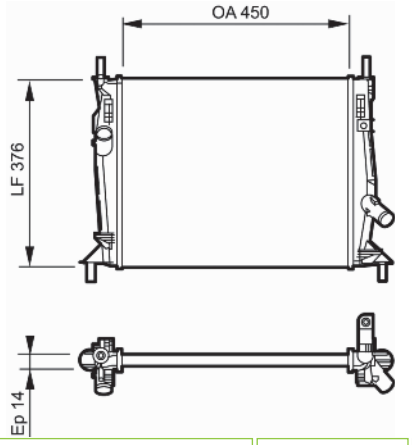


| | | | |
|---|---|---|---|
| FORD | 1354176 | 450x376x14 | 33mm L |
| | | - | 33mm L |

## 734320 RM2020 ALB

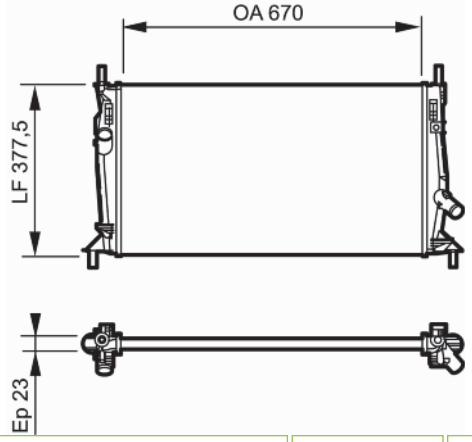


| | | | |
|---|---|---|---|
| FORD | 1374177 | 670x377,5x23 | 33mm L |
| MAZDA | Z60315200 | | |
| VOLVO | 8603621 | | |
| | | - | 33mm L |

## 734321 RM2021 ALB

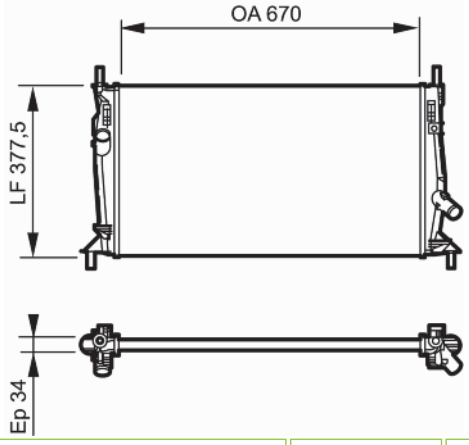


| | | | |
|---|---|---|---|
| FORD | 1357325 | 670x377,5x34 | 33mm L |
| MAZDA | Y60115200E | | |
| VOLVO | 8603811 | | |
| | | - | 33mm L |

## 734322 RAB005 ALB

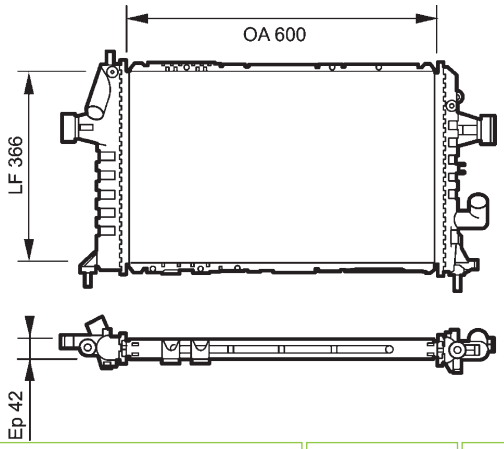


| | | | |
|---|---|---|---|
| OPEL | 1300209 | 600x369x42 | 34mm L |
| VAUXHALL | 9192586 | | |
| | | - | 34mm L |

## 734326 ALB

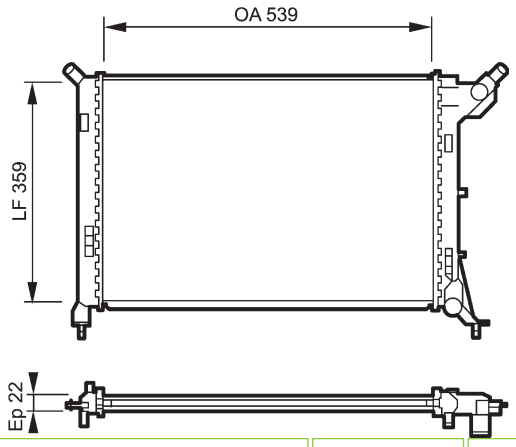


| | | | |
|---|---|---|---|
| MINI | 17101475552 | 539x359x22 | 32mm L |
| | | - | 32mm L |

## 734327 ALB

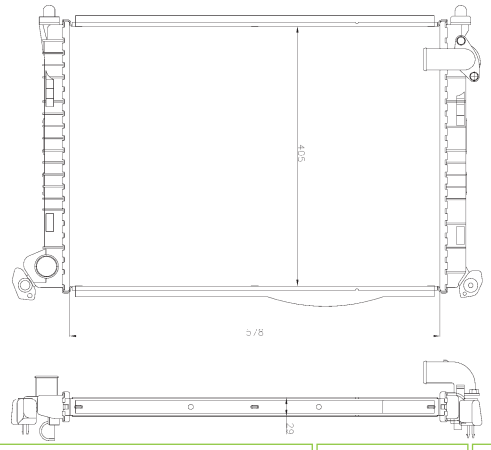

| | | |
|---|---|---|
| MINI 17107509714 | 578x399x26 | 32mm L |
| | | 32mm L |

## 734328 ALB

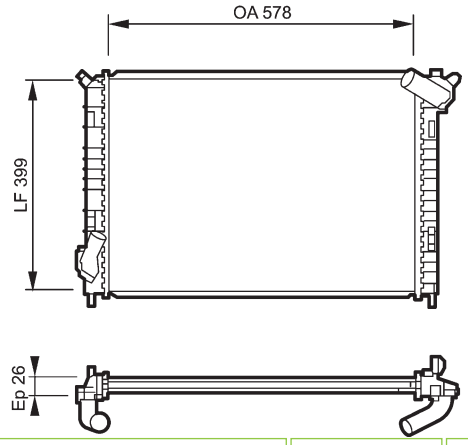


| | | |
|---|---|---|
| MINI 17101475554 | 578x399x26 | 32mm L |
| | | 32mm L |

## 734329 ALB

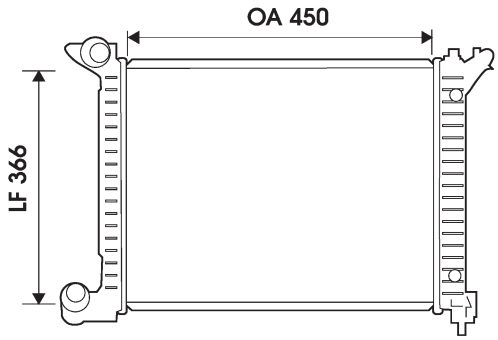


| | | |
|---|---|---|
| MINI 17117788753 | 450x366x24 | 32mm L |
| | | 32mm L |

## 734330 RA1341 ALB

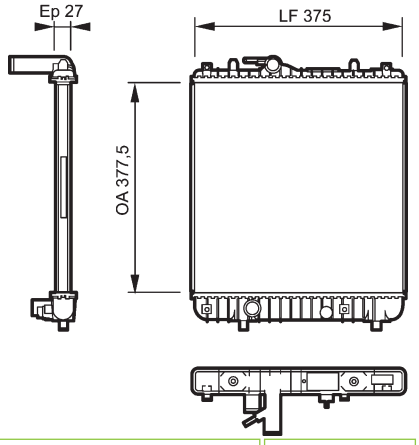


| | | |
|---|---|---|
| VAUXHALL 9210556 | 375x377,5x27 | |
| | | 28mm L |

## 734331 RA1357 ALB

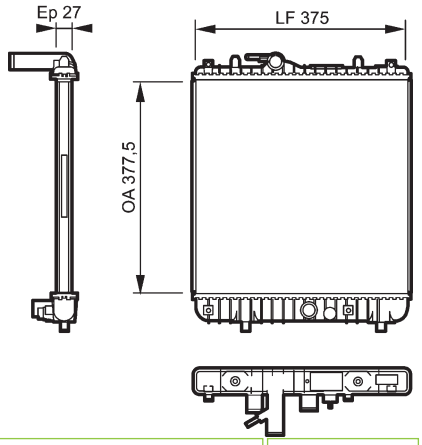


| | | |
|---|---|---|
| OPEL 4707764<br>VAUXHALL 13182786 | 375x377,5x27 | 28mm L |
| | | 28mm L |

## 734332 RM1758 ALM

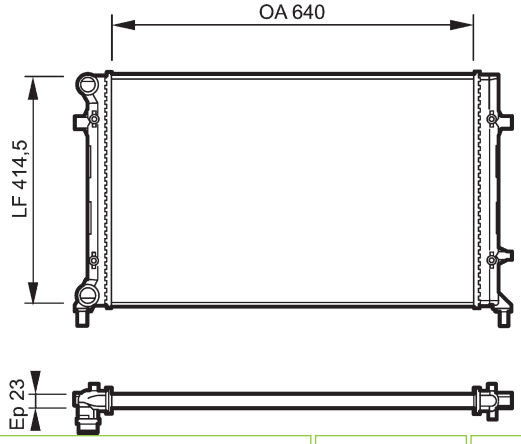


| | | |
|---|---|---|
| AUDI 1K0121251P<br>SEAT 1K0121251P<br>SKODA 1K0121251P<br>VOLKSWAGEN 1K0121251P | 640x414,5x23 | 32mm QC |
| | | 32mm QC |

## 734333 RA1365 ALB

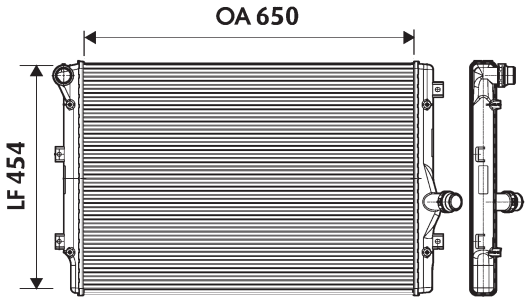


| | | | |
|---|---|---|---|
| AUDI | 1K0121251N | 650x454,3x34 | 32mm QC |
| SEAT | 1K0121251N | | |
| SKODA | 1K0121251N | | |
| VOLKSWAGEN | 1K0121251N | | 32mm QC |

## 734338 RA1544 ALB

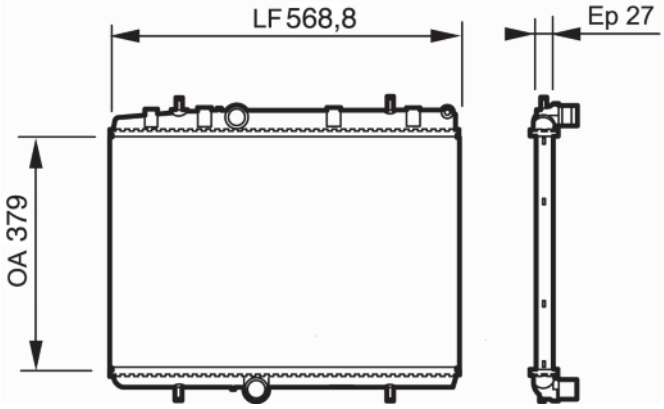


| | | | |
|---|---|---|---|
| CITROEN | 1330P9 | 378,6x568,8x27 | 32mm L |
| PEUGEOT | 1330P9 | | |
| | | | 32mm L |

## 734335 RM1757 ALM

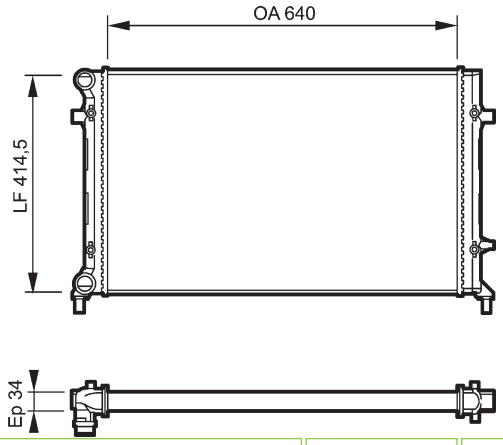


| | | | |
|---|---|---|---|
| AUDI | 1K0121251F | 640x414,5x34 | 32mm QC |
| SEAT | 1K0121251E | | |
| SKODA | 1K0121251F | | |
| VOLKSWAGEN | 1K0121251F | | 32mm QC |

## 734339 RA1338 ALB

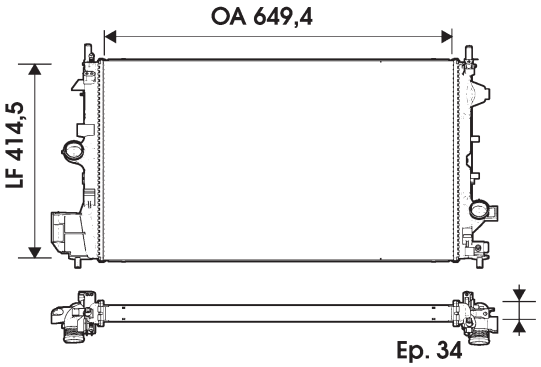


| | | | |
|---|---|---|---|
| FIAT | 51770416 | 649x414,5x34 | 35mm L |
| OPEL | 1300273 | | |
| SAAB | 24418345 | | |
| VAUXHALL | 24418345 | | 35mm L |

## 734336 CBS

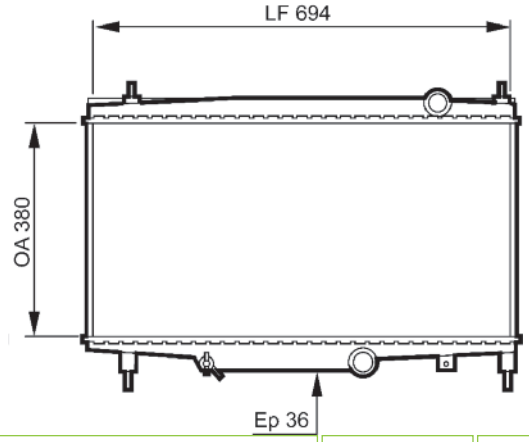


| | | | |
|---|---|---|---|
| CITROEN | 1331LK | 380x694x36 | 32mm L |
| PEUGEOT | 1331LK | | |
| | | | 32mm L |

## 734345 RA1339 ALB

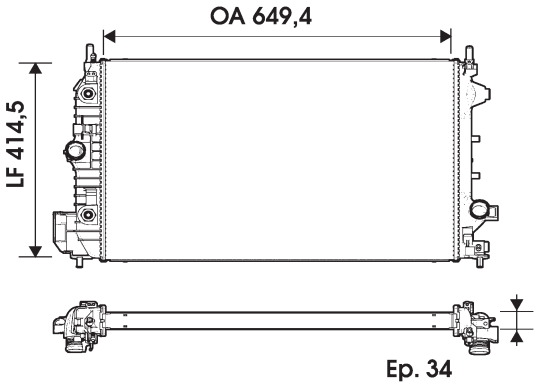


| | | | |
|---|---|---|---|
| FIAT | 51770420 | 649x414,5x34 | 34mm L |
| OPEL | 1300412 | | |
| SAAB | 13156387 | | |
| VAUXHALL | 13156387 | | 34mm L |

## 734346 RM1579 ALM

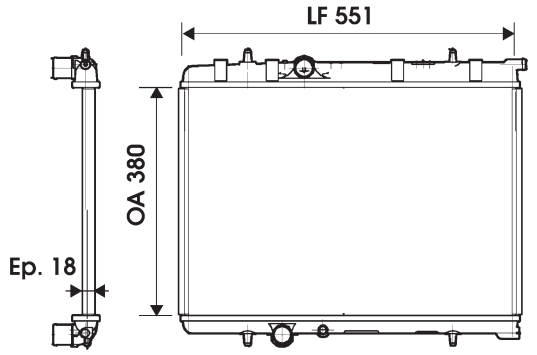


| | | | |
|---|---|---|---|
| CITROEN 1330N5<br>PEUGEOT 1330N5 | 380x551x18 | 32mm L | |
| | | 32mm L | |

## 734361 ALB

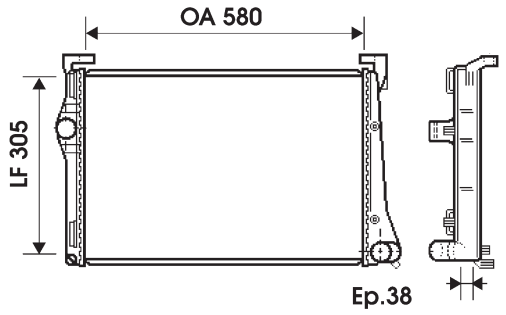


| | | | |
|---|---|---|---|
| FIAT 51708005<br>LANCIA 51708005 | 580x305x38 | 30mm L | |
| | | 30mm L | |

## 734353 RAB013 ALB

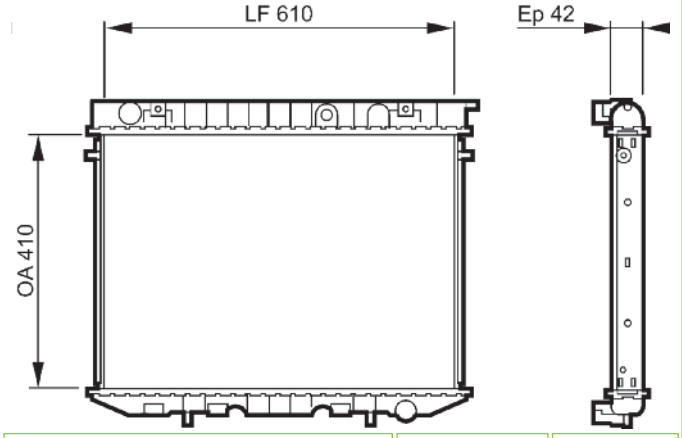


| | | | |
|---|---|---|---|
| OPEL 6302020<br>VAUXHALL 91153279 | 410x610x42 | 34mm L | |
| | | 34mm L | |

## 734362 ALB

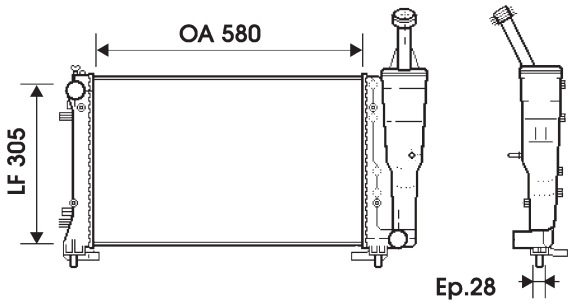


| | | | |
|---|---|---|---|
| FIAT 51706942<br>LANCIA 51706942 | 580x305x28 | 30mm L | |
| | | 30mm L | |

## 734354 ALB

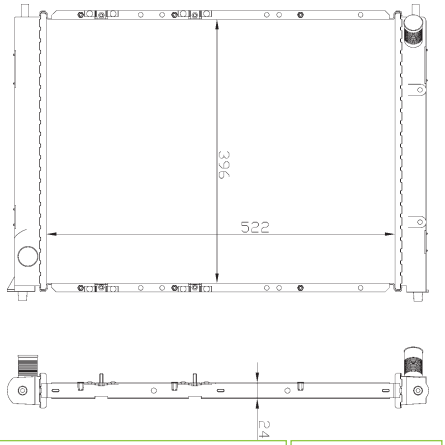


| | | | |
|---|---|---|---|
| MG PCC107681<br>ROVER PCC001660 | 522x396x24 | 28mm L | |
| | | 28mm L | |

## 734363 ALM

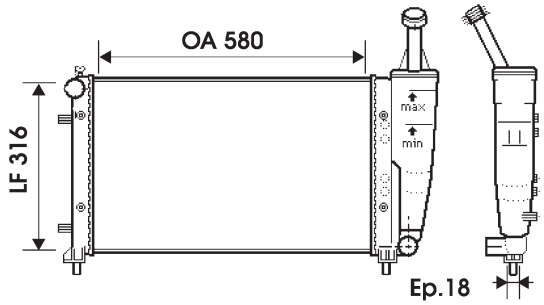


| | | | |
|---|---|---|---|
| FIAT 51706057<br>LANCIA 51706057 | 580x316x18 | 30mm L | |
| | | 30mm L | |

## 734364 ALB

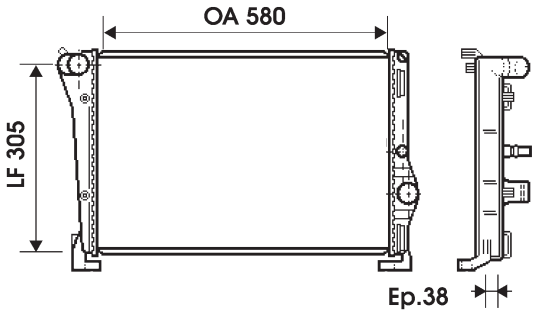


| | | |
|---|---|---|
| FIAT 46834067<br>LANCIA 46834067 | 580x305x38 | 30mm L |
| - | | 30mm L |

## 734379 ALB

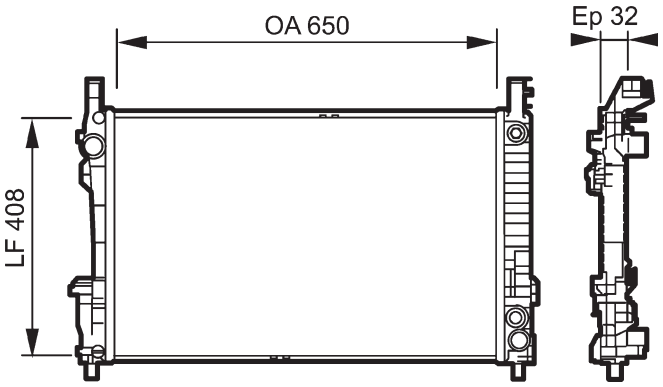


| | | |
|---|---|---|
| MERCEDES 1695000403 | 650x408x32 | 35mm L |
| + | | 35mm L |

## 734366 RA1545 ALB

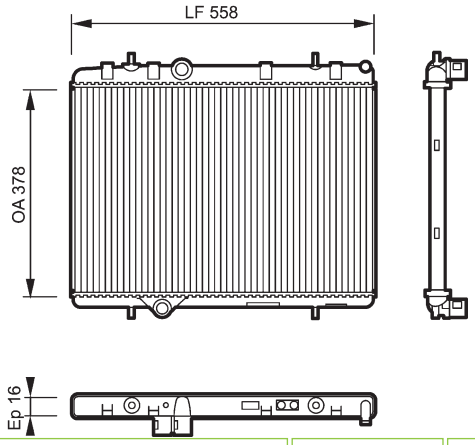


| | | |
|---|---|---|
| CITROEN 1330J9<br>PEUGEOT 1330J9 | 378x558x27 | L |
| - | | L |

## 734380

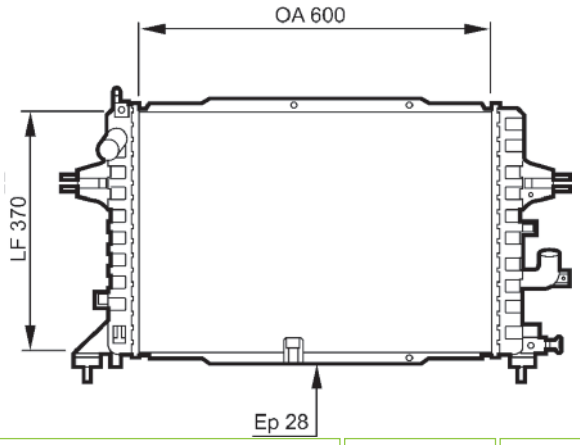


| | | |
|---|---|---|
| OPEL 1300269<br>VAUXHALL 13143570 | 600x370x28 | 34mm L |
| - | | 34mm L |

## 734378 ALB

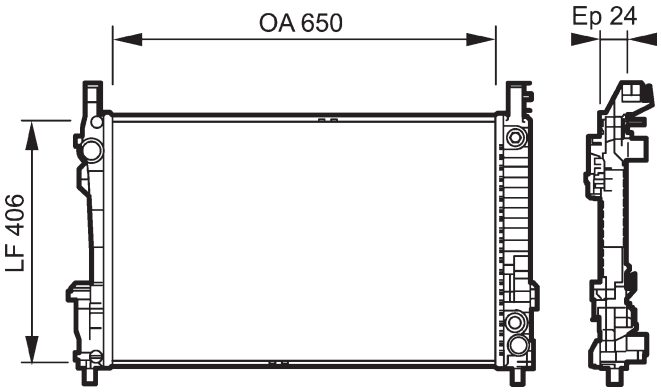


| | | |
|---|---|---|
| MERCEDES 1695000003 | 650x406x24 | 35mm L |
| + | | 35mm L |

## 734381

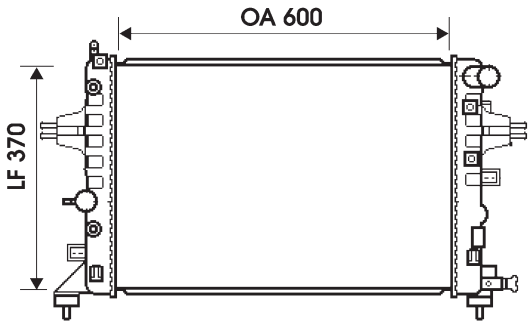


| | | |
|---|---|---|
| OPEL 1300265<br>VAUXHALL 13145210 | 600x370x14 | 34mm L |
| - | | 34mm L |

## 734382 ALB

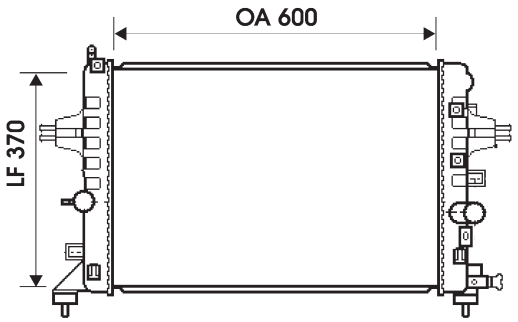


| | | |
|---|---|---|
| OPEL 1300266<br>VAUXHALL 13145211 | 600x370x22 | 34mm L |
| | - | 34mm L |

## 734383

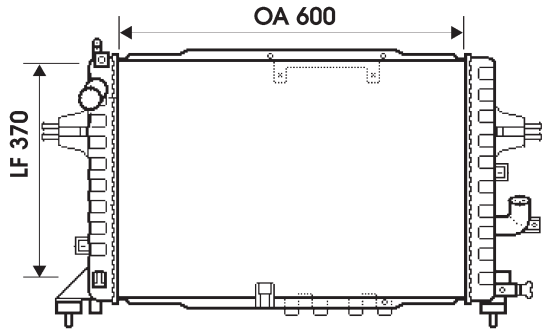


| | | |
|---|---|---|
| OPEL 1300268<br>VAUXHALL 13143554 | 600x370x28 | 34mm L |
| | - | 34mm L |

## 734384

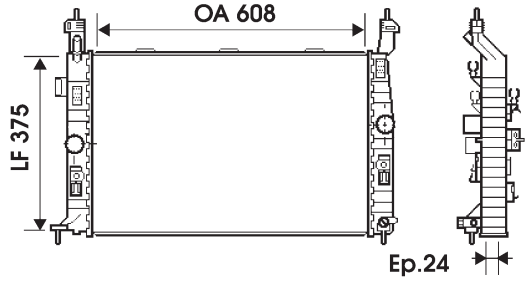


| | | |
|---|---|---|
| OPEL 1300252<br>VAUXHALL 13128930 | 608x375x24 | 34mm L |
| | - | 34mm L |

## 734385

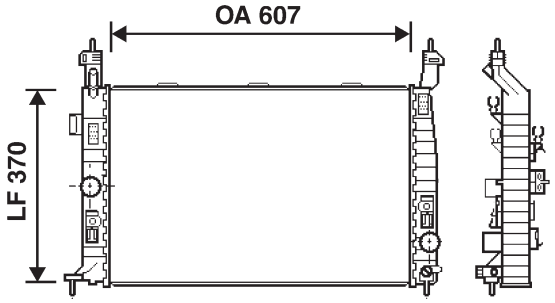


| | | |
|---|---|---|
| OPEL 1300254 | 607x370x27 | 35mm L |
| | - | 35mm L |

## 734386

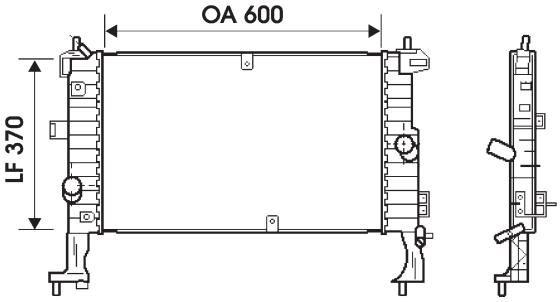


| | | |
|---|---|---|
| OPEL 1300260<br>VAUXHALL 13148295 | 600x370 | 34mm L |
| | - | 34mm L |

## 734388

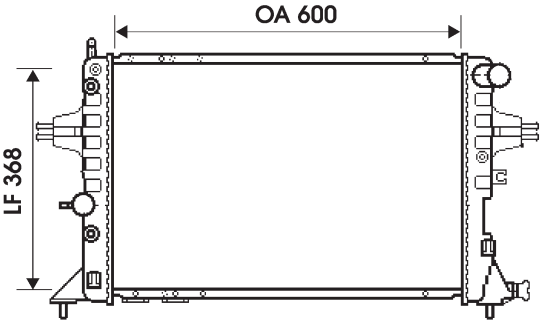


| | | |
|---|---|---|
| OPEL 1300210<br>VAUXHALL 9192607 | 600x368x42 | 34mm L |
| | + | 34mm L |

## 734389 ALB

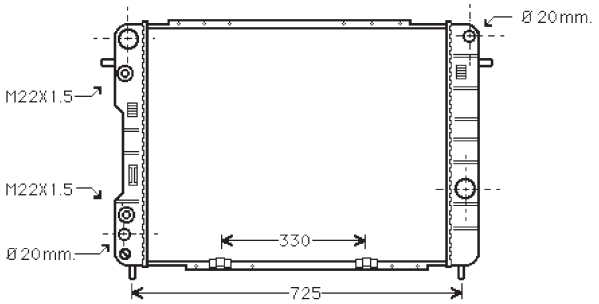


| | | |
|---|---|---|
| VAUXHALL 52463053 | 653x460x42 | 34mm L |
| | + | 34mm L |

## 734395 ALB

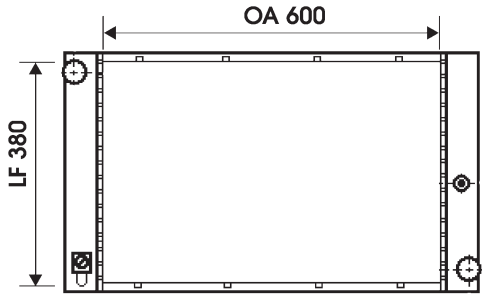


| | | |
|---|---|---|
| BMW 17112248478 | 600x380x40 | 38mm L |
| | - | 38mm L |

## 734392 ALB

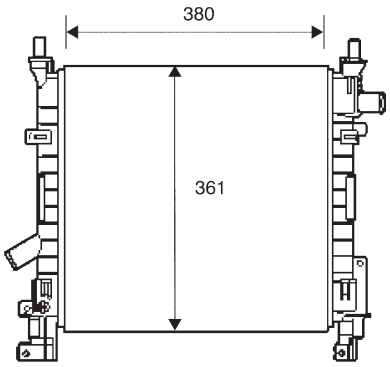


| | | |
|---|---|---|
| FORD 1231795 | 380x361x26 | 27mm L |
| | - | 27mm L |

## 734396 ALB

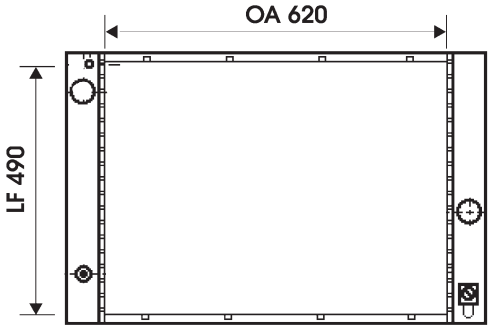


| | | |
|---|---|---|
| BMW 17117507972 | 620x490x40 | 38mm QC |
| | - | 38mm QC |

## 734394 ALB

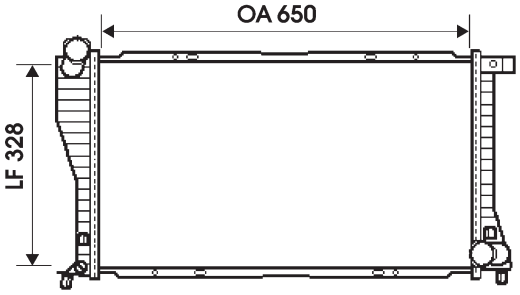


| | | |
|---|---|---|
| BMW 17112247345 | 650x328x42 | 38mm QC |
| | - | 38mm QC |

## 734397 ALB

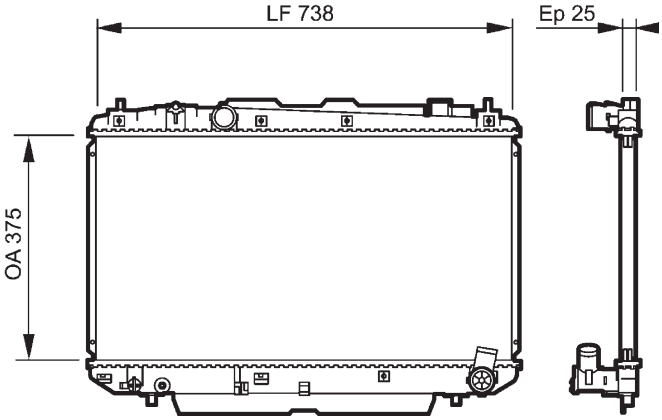


| | | |
|---|---|---|
| TOYOTA 1640027060 | 375x738x25 | 38mm L |
| | - | 34mm L |

## 734398 RA1408 ALB

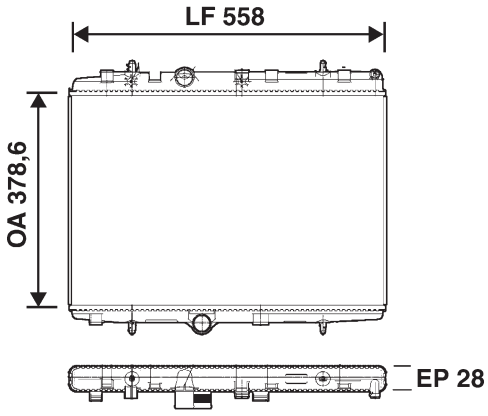


| | | |
|---|---|---|
| CITROEN 1330P8<br>PEUGEOT 1330P8 | 378x558x28 | |
| - | | 32mm L |

## 734406 CBS

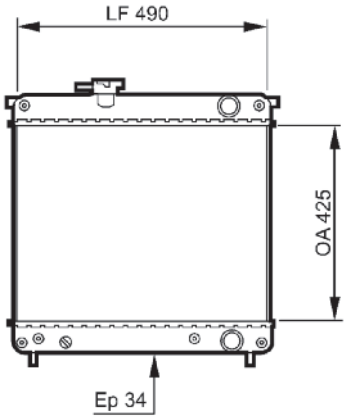


| | | |
|---|---|---|
| SUZUKI 1770086CA0 | 425x490x34 | L |
| - | | L |

## 734401 ALB

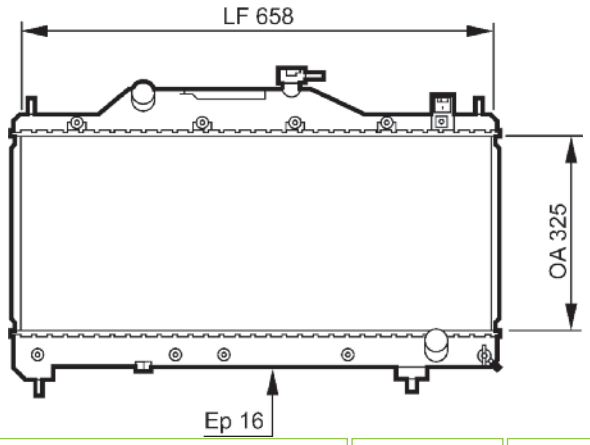


| | | |
|---|---|---|
| TOYOTA 164000D080 | 325x658x16 | 31mm L |
| - | | 31mm L |

## 734408 ALB

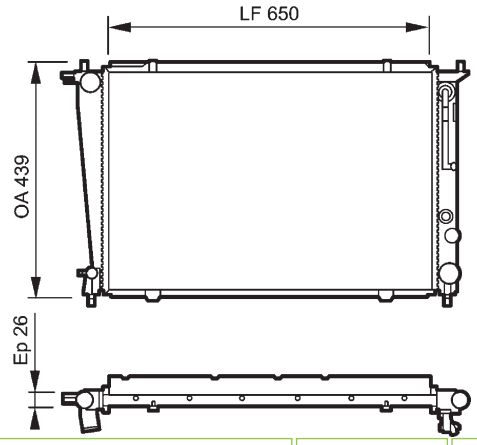


| | | |
|---|---|---|
| HYUNDAI 253104A100 | 650x439x26 | 37mm L |
| - | | 37mm L |

## 734405 ALB

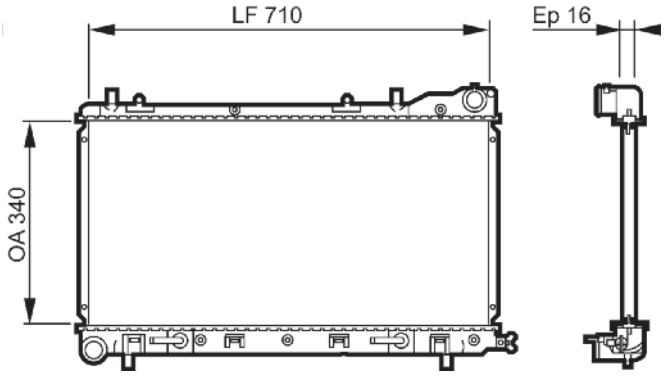


| | | |
|---|---|---|
| SUBARU 45111FC320 | 340x710x16 | 38mm L |
| + | | 38mm L |

## 734410 ALB

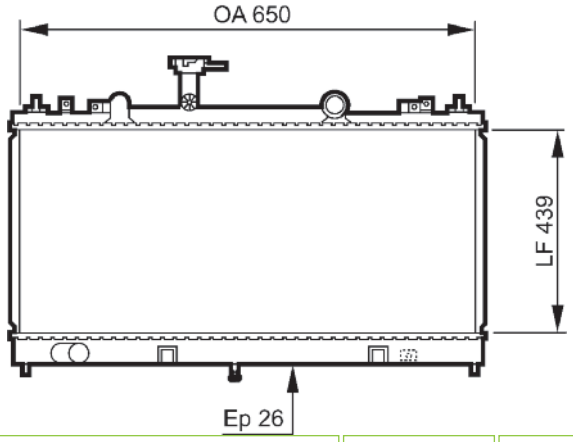


| | | |
|---|---|---|
| MAZDA RF5C15200 | 375x735x16 | 32mm L |
| - | | 32mm L |

## 734411

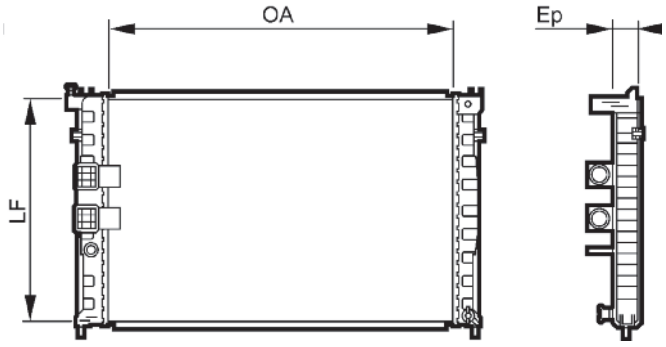


| | | | |
|---|---|---|---|
| PEUGEOT | 1330H9 | 410x694 | 36mm L |
| | | | 36mm L |

## 734418 ALB

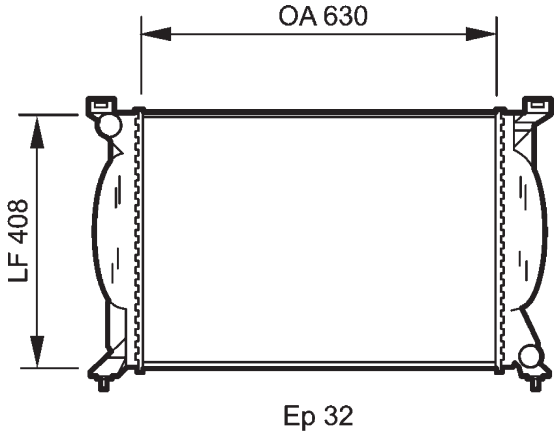


| | | | |
|---|---|---|---|
| AUDI | 8E0121251G | 630x408x32 | 32mm QC |
| | | | 32mm QC |

## 734412 RA1346 ALB

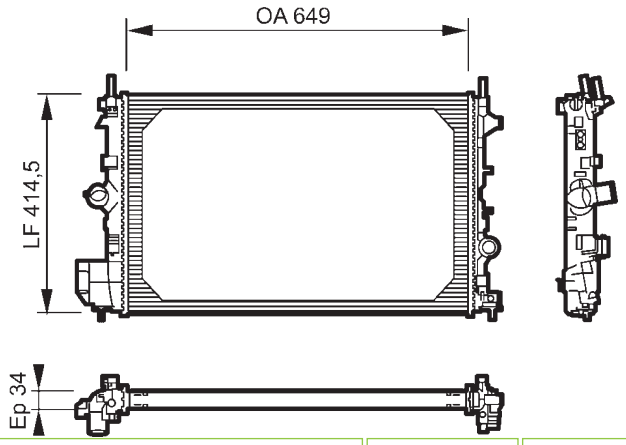


| | | | |
|---|---|---|---|
| FIAT | 51749911 | 649x414,5x34 | |
| | | | L |

## 734419 ALB

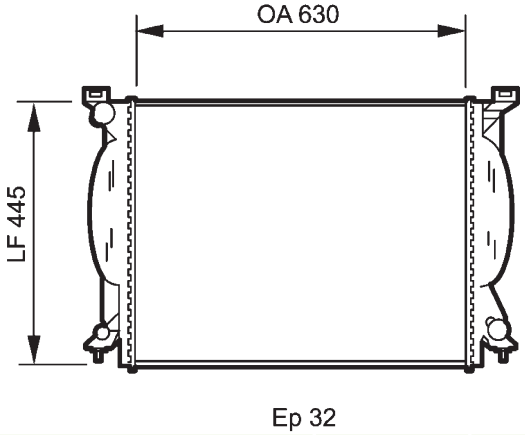


| | | | |
|---|---|---|---|
| AUDI | 8E0121251C | 630x445x32 | 32mm QC |
| | | | 32mm QC |

## 734415 ALM

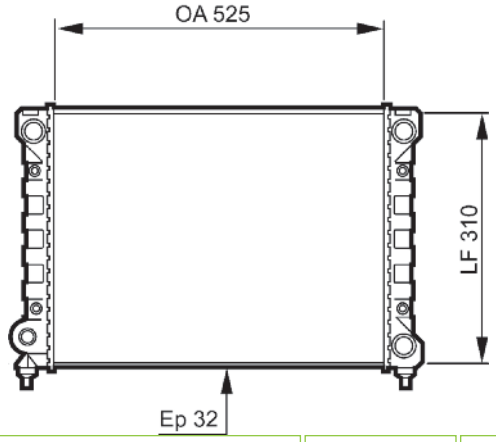


| | | | |
|---|---|---|---|
| VOLKSWAGEN | 353121253AL | 525x310x32 | 32mm L |
| | | | 32mm L |

## 734420 RM1456 ALM

Picture not available
Image non disponible
Imagen no disponible
Immagine non disponibile
Nicht verfügbares Bild
Brak zdjęcia
Картина недоступна

| | | | |
|---|---|---|---|
| MERCEDES | 2215000103 | 650x285x18 | L |
| | | | L |

## 734421 ALB

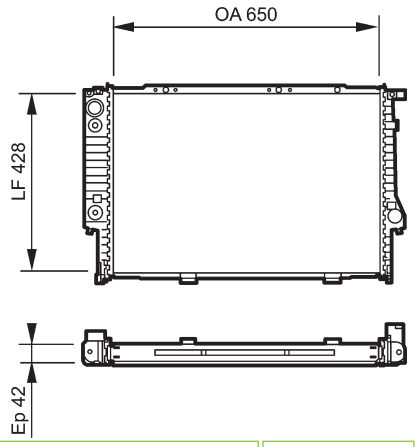


| | | |
|---|---|---|
| BMW 17112244543 | 650x428x42 | 40mm L |
| + | | 40mm L |

## 734428 ALB

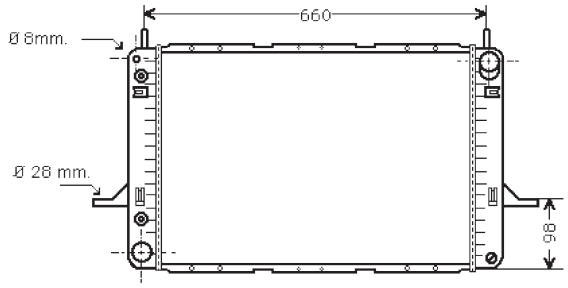


| | | |
|---|---|---|
| FORD 7404754 | 600x405x40 | L |
| - | | L |

## 734423 RA1548 ALB

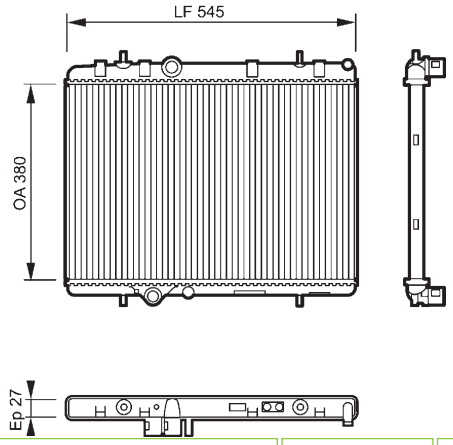


| | | |
|---|---|---|
| PEUGEOT 1330K2 | 378x558,5x27 | L |
| - | | QC |

## 734429 ALB

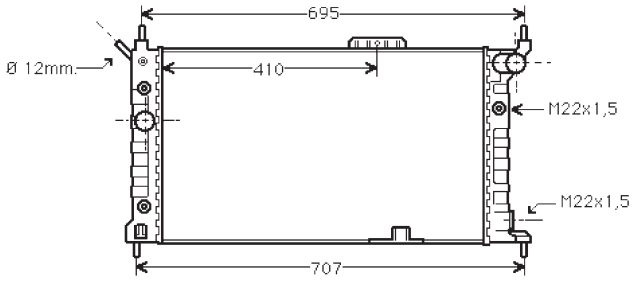


| | | |
|---|---|---|
| OPEL 1300148 | 590x365x28 | 34mm L |
| + | | 34mm L |

## 734424 ALB

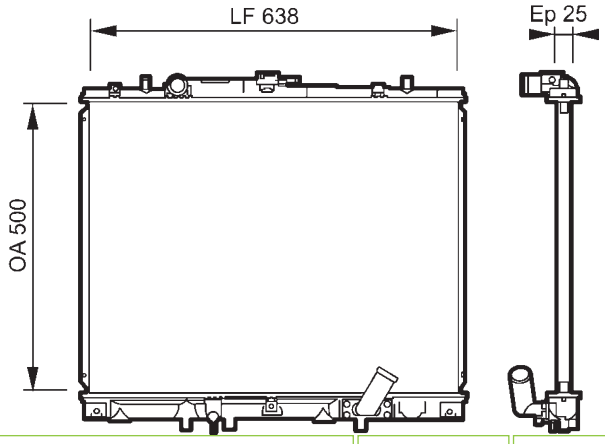


| | | |
|---|---|---|
| MITSUBISHI MR258668 | 500x638x25 | |
| - | | 35mm L |

## 734432 ALB

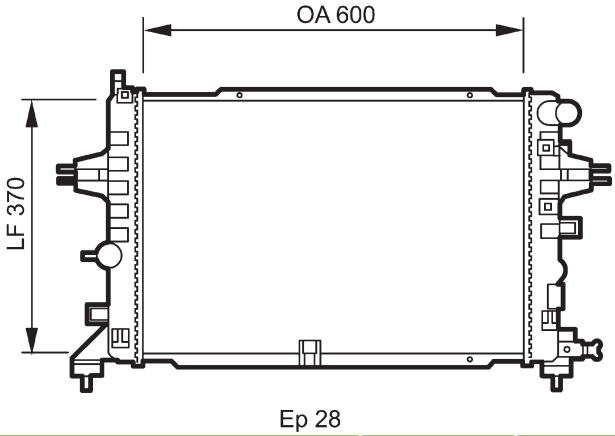


| | | |
|---|---|---|
| OPEL 1300267<br>VAUXHALL 13145212 | 600x370x28 | 34mm L |
| - | | 34mm L |

## 734436 RA1421 ALB

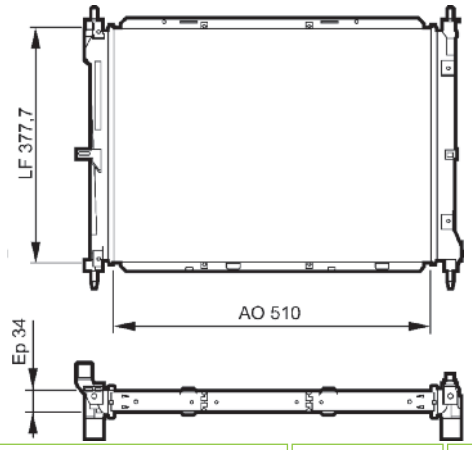


| | | |
|---|---|---|
| NISSAN 21410BC510 | 510x377,7x34 | L |
| | - | L |

## 734445 CBS

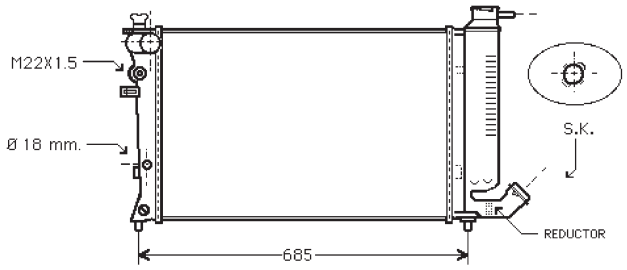


| | | |
|---|---|---|
| PEUGEOT 133076 | 610x366x36 | 40mm L |
| | - | 40mm QC |

## 734437 RA1363 ALB

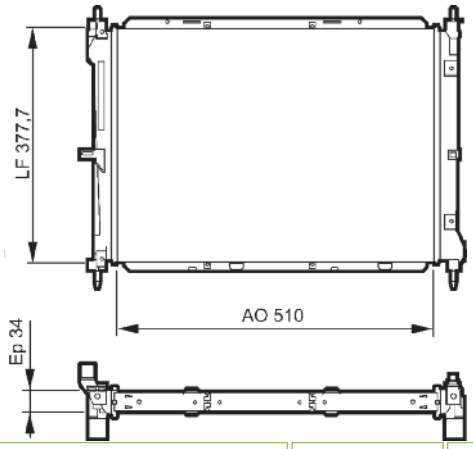


| | | |
|---|---|---|
| NISSAN 21410BC500 | 510x377,7x34 | |
| | - | L |

## 734446 ALB

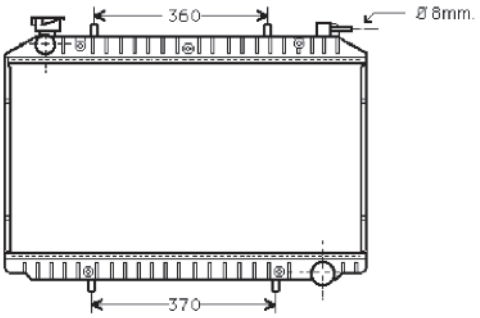


| | | |
|---|---|---|
| NISSAN 214107C002 | 420x684x32 | 35mm L |
| | - | 42mm L |

## 734438 RA1399 ALB

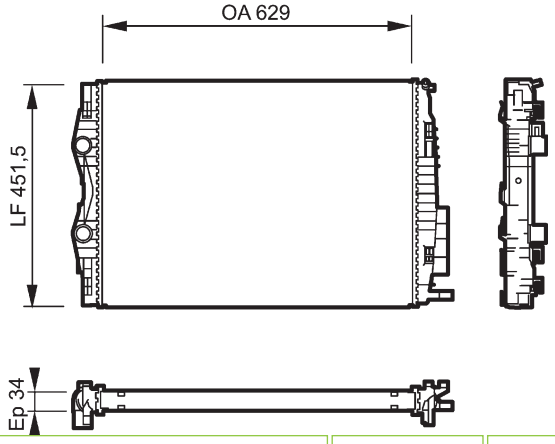


| | | |
|---|---|---|
| RENAULT 8200325007 | 629x451,5x34 | L |
| | - | L |

## 734447 RM1457 ALM

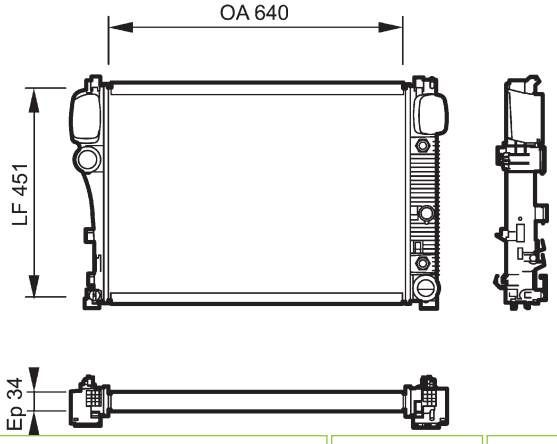


| | | |
|---|---|---|
| MERCEDES 2215000003 | 640x451x34 | |
| | + | QC |

## 734448 RA2027 ALB

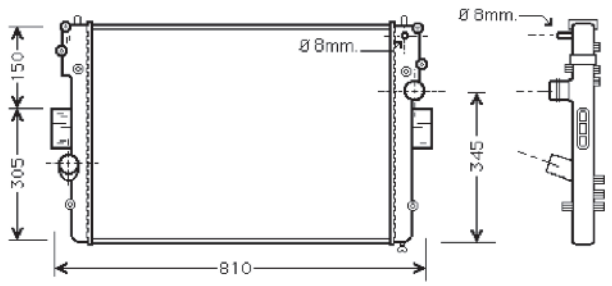


| | | |
|---|---|---|
| IVECO 504084141 | 649x440x36 | 38mm L |
| | | 38mm L |

## 734454 CBS

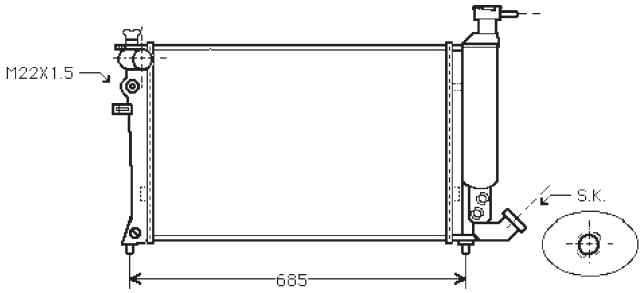


| | | |
|---|---|---|
| CITROEN 96150272 | 610x348x40 | 40mm L |
| | | 40mm QC |

## 734449 RM2014 ALB

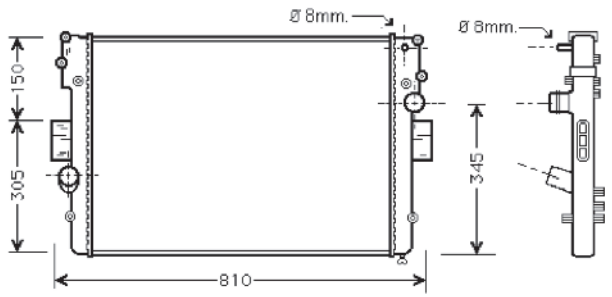


| | | |
|---|---|---|
| IVECO 504045487 | 645x470x34 | 38mm L |
| | | 38mm L |

## 734455 CBS

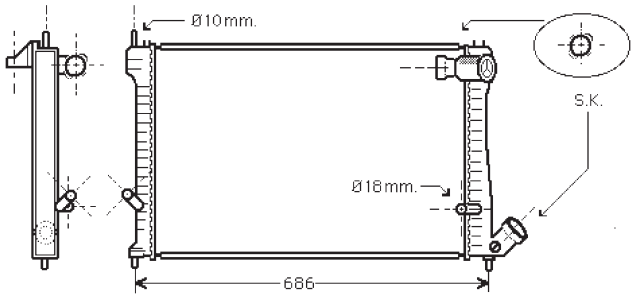


| | | |
|---|---|---|
| CITROEN 133036 | 610x398x36 | 42mm QC |
| | | 42mm QC |

## 734452 ALB

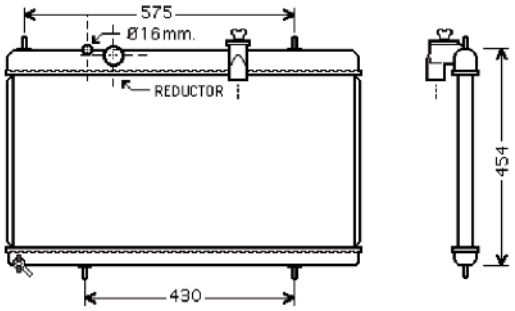


| | | |
|---|---|---|
| CITROEN 1330K8<br>PEUGEOT 1330K8 | 380x704x33 | 32mm L |
| | | 32mm L |

## 734456 ALB

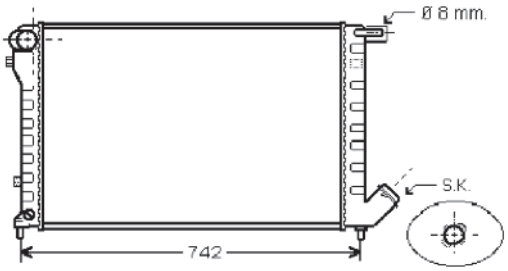


| | | |
|---|---|---|
| CITROEN 1330E2<br>PEUGEOT 1330E2 | 669x365x27 | 40mm L |
| | | 40mm QC |

## 734457 ALM

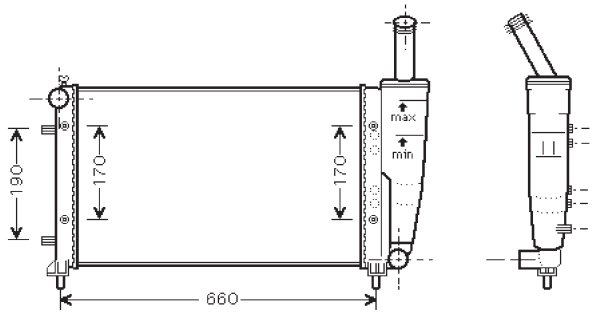


| | | |
|---|---|---|
| FIAT 51724183 | 580x317x18 | 30mm L |
| | | 30mm L |

## 734458 ALB

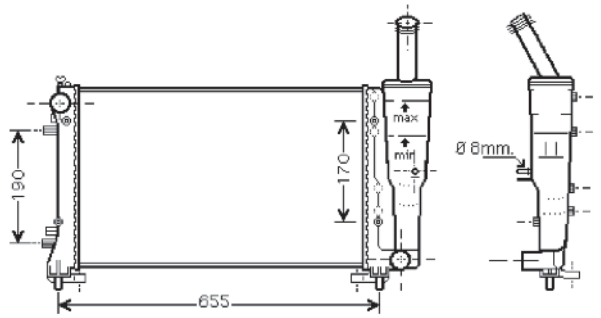


| | | |
|---|---|---|
| FIAT 51723827 | 580x306x28 | 30mm L |
| | | 30mm L |

## 734459 ALM

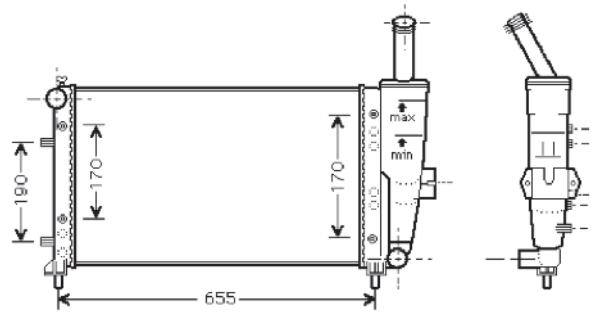


| | | |
|---|---|---|
| FIAT 51714679 | 580x317x18 | 30mm L |
| | | 30mm L |

## 734461 RA1531 ALB

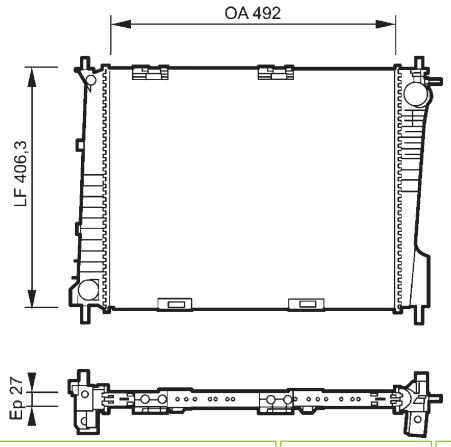


| | | |
|---|---|---|
| RENAULT 8200489879 | 492x406,3x27 | 32mm L |
| | | 32mm L |

## 734462 RA1532 ALB

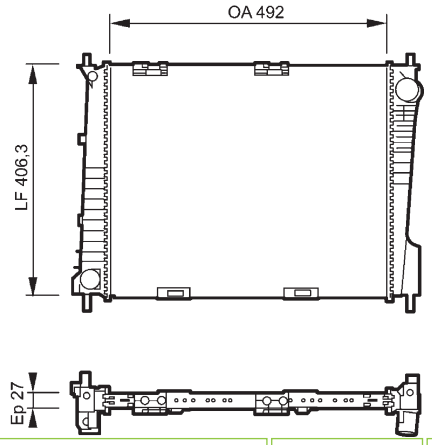


| | | |
|---|---|---|
| RENAULT 8200468913 | 492x406,3x27 | 32mm L |
| | | 32mm L |

## 734463 RA1546 ALB

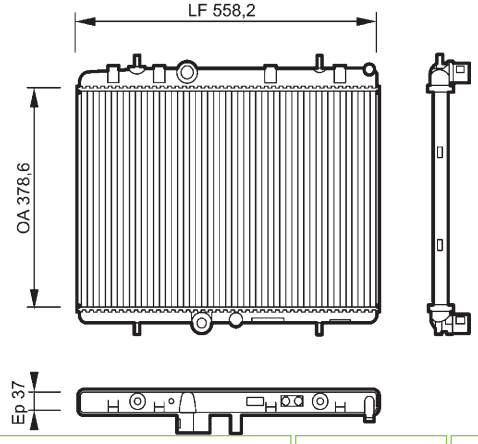


| | | |
|---|---|---|
| CITROEN 1330J8<br>PEUGEOT 1330J8 | 378,6x558,2x37 | 32mm L |
| | | 32mm L |

## 734464 ALM

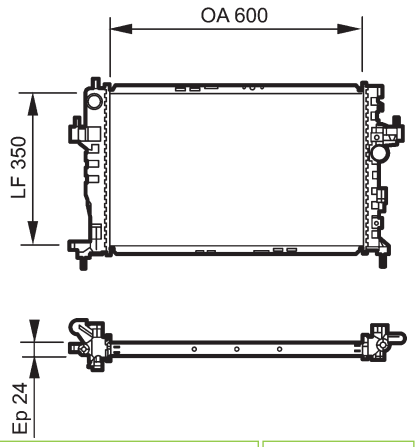


| | | | |
|---|---|---|---|
| OPEL 1300261<br>VAUXHALL 93177593 | 600x350x24 | 34mm L | |
| | - | 34mm L | |

## 734468 ALB

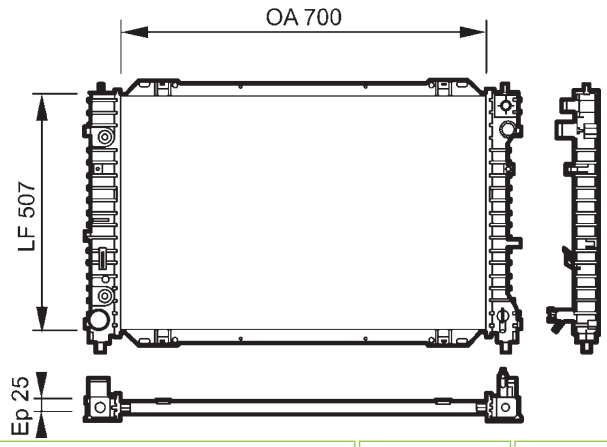


| | | | |
|---|---|---|---|
| FORD 4135737<br>MAZDA AJ0315200 | 700x507x25 | 32mm L | |
| | - | 38mm L | |

## 734465 ALB

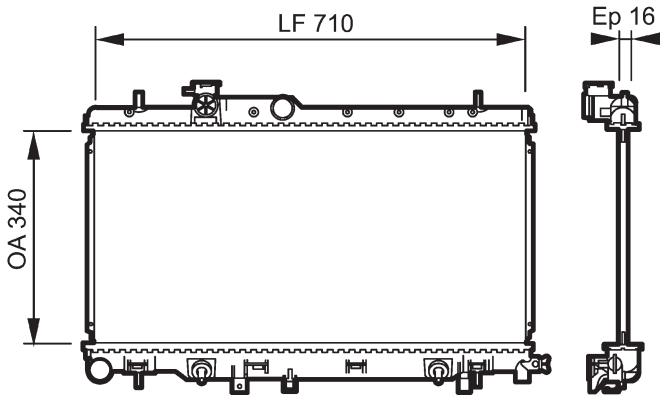


| | | | |
|---|---|---|---|
| SUBARU 45111FE051 | 340x710x16 | 38mm L | |
| | + | 38mm L | |

## 734473 ALB

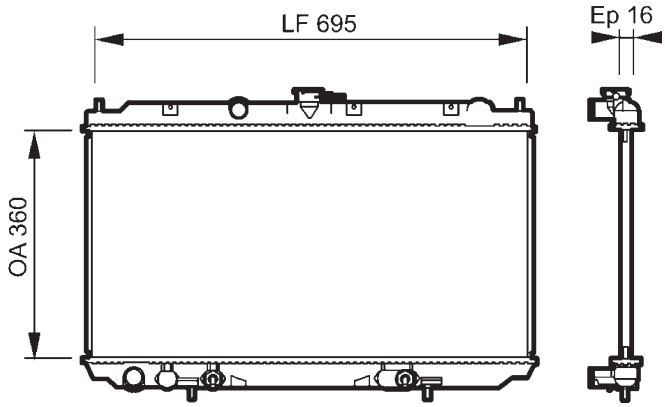


| | | | |
|---|---|---|---|
| NISSAN 21460BM702 | 360x695x16 | 28mm L | |
| | + | 28mm L | |

## 734466 ALB

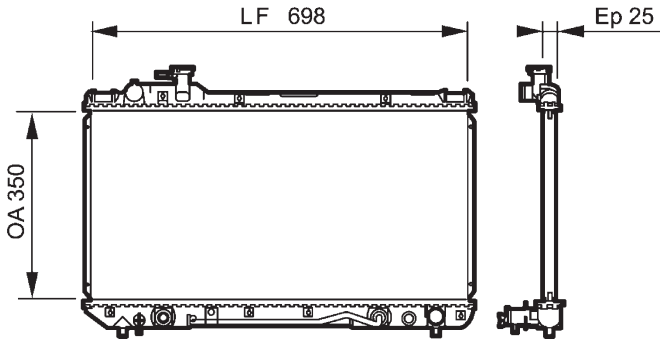


| | | | |
|---|---|---|---|
| TOYOTA 164007A122 | 350x698x25 | 31mm L | |
| | + | 31mm L | |

## 734476 ALB

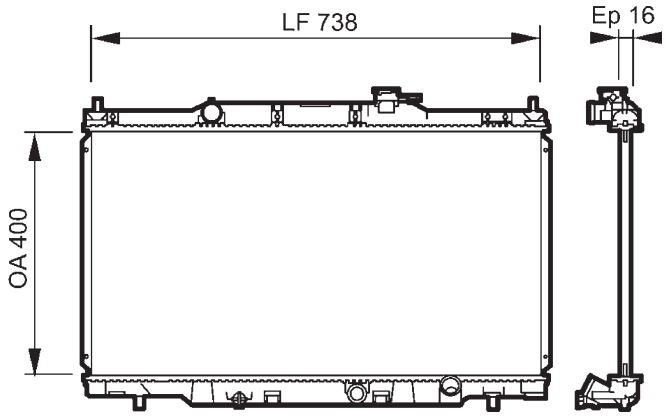


| | | | |
|---|---|---|---|
| HONDA 19010PNLG01 | 400x738x16 | 32mm L | |
| | - | 32mm L | |

## 734477 ALB

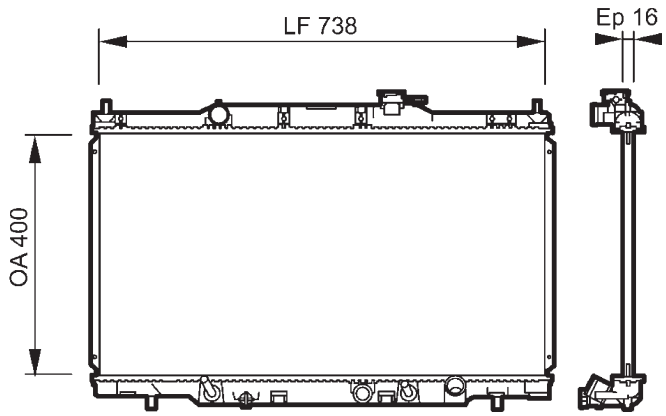


| | | |
|---|---|---|
| HONDA 19010PNLG51 | 400x738x16 | 32mm L |
| | + | 32mm L |

## 734478 ALB

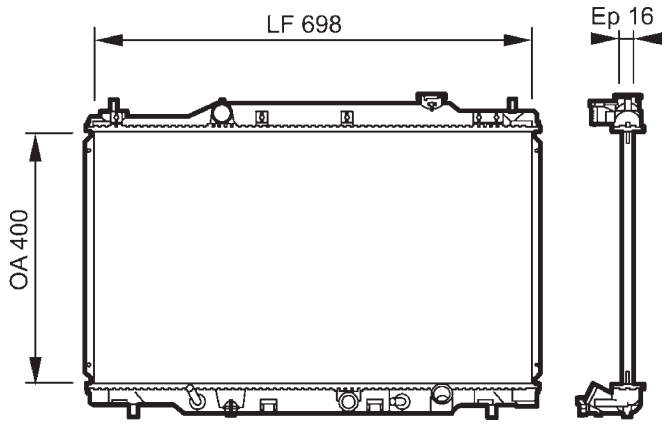


| | | |
|---|---|---|
| HONDA 19010PNAG51 | 400x698x16 | 32mm L |
| | - | 32mm L |

## 734480 ALB

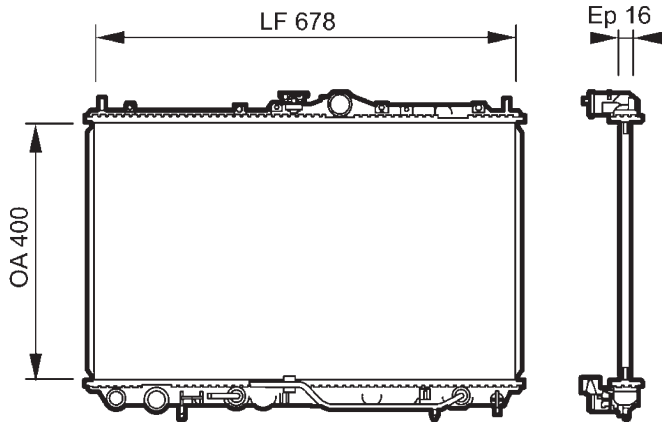


| | | |
|---|---|---|
| MITSUBISHI MB925638 | 400x678x16 | 35mm L |
| | + | 35mm L |

## 734481 ALB

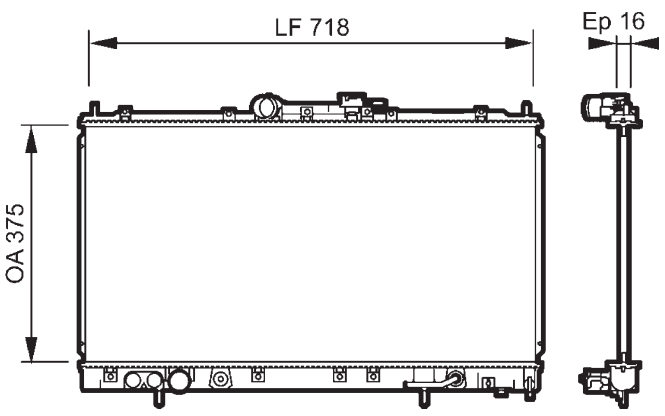


| | | |
|---|---|---|
| MITSUBISHI MR212449 | 375x718x16 | 35mm L |
| | + | 35mm L |

## 734483 ALB

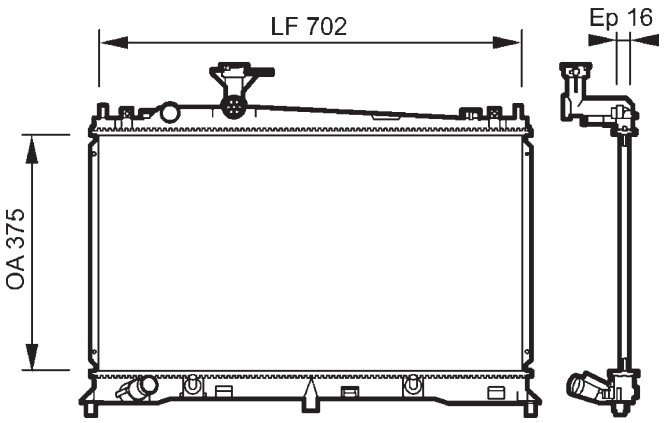


| | | |
|---|---|---|
| MAZDA LF2115200 | 375x702x16 | 32mm L |
| | + | 32mm L |

## 734484 ALB

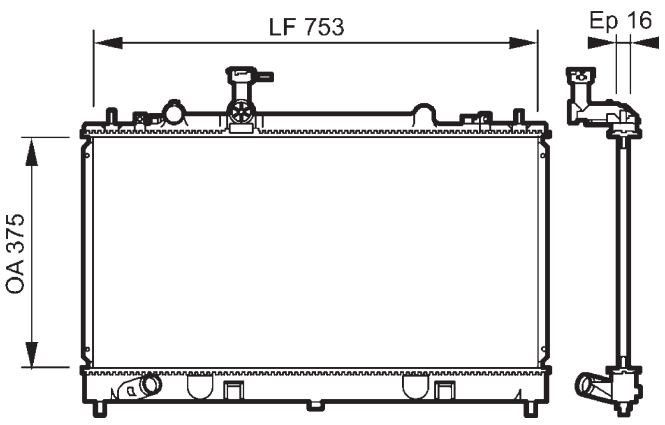


| | | |
|---|---|---|
| MAZDA L32715200 | 375x753x16 | 32mm L |
| | - | 32mm L |

## 734486 ALB

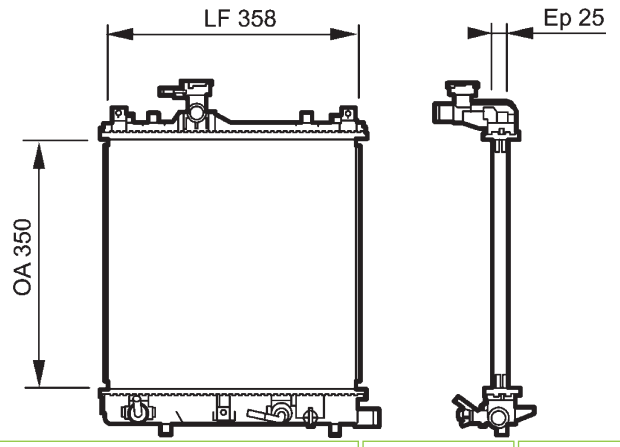


| | | |
|---|---|---|
| SUZUKI 1770075F10 | 350x358x25 | 25mm L |
| | + | 25mm L |

## 734490 ALB

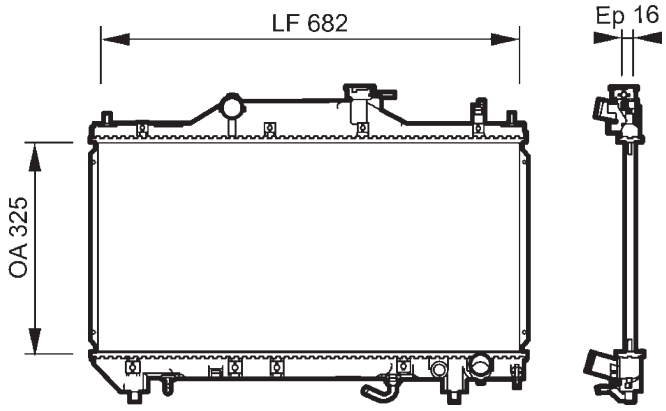


| | | |
|---|---|---|
| TOYOTA 164000D100 | 325x682x16 | 32mm L |
| | + | 32mm L |

## 734488 CBS

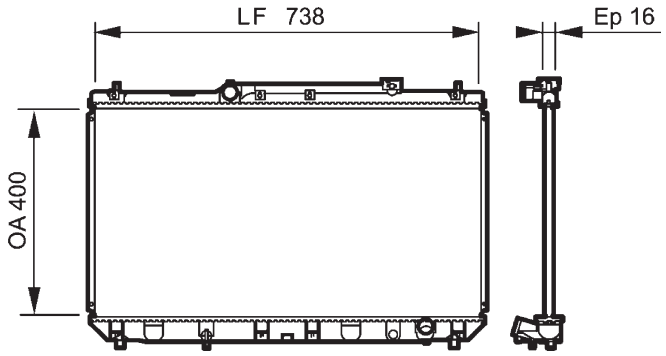


| | | |
|---|---|---|
| TOYOTA 164007A290 | 400x738x16 | 31mm L |
| | - | 31mm L |

## 734491 ALB

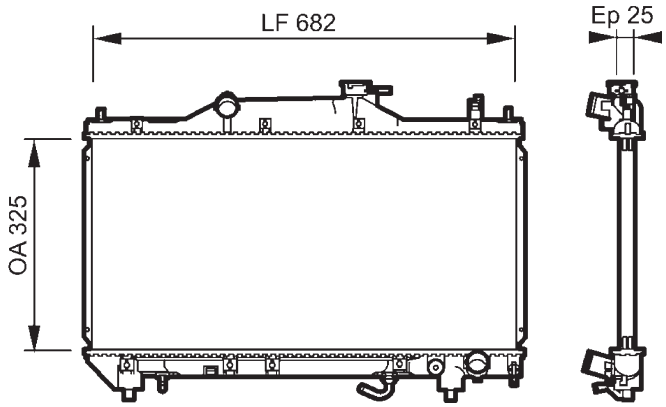


| | | |
|---|---|---|
| TOYOTA 164000H010 | 325x682x25 | 32mm L |
| | + | 32mm L |

## 734489 ALB

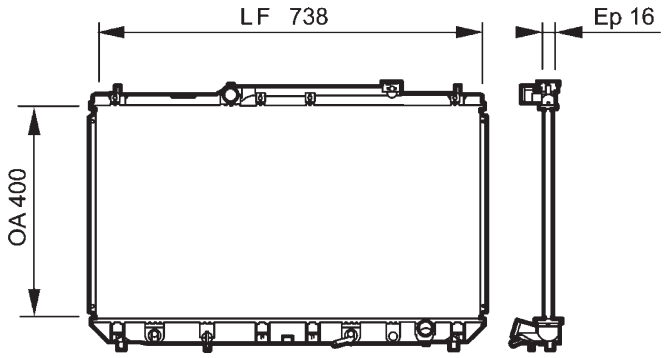


| | | |
|---|---|---|
| TOYOTA 164007A300 | 400x738x16 | 31mm L |
| | + | 31mm L |

## 734492 ALB

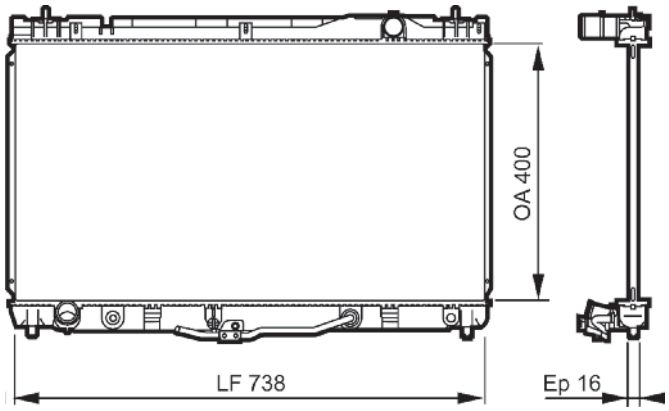


| | | |
|---|---|---|
| TOYOTA 1640020271 | 400x738x16 | 34mm L |
| | + | 34mm L |

## 734493 ALB

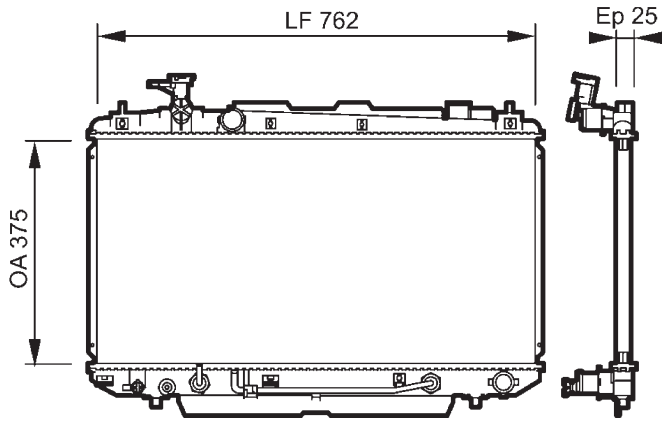


| | | |
|---|---|---|
| TOYOTA 1640028190 | 375x738x25 | 34mm L |
| | + | 34mm L |

## 734515 CBS

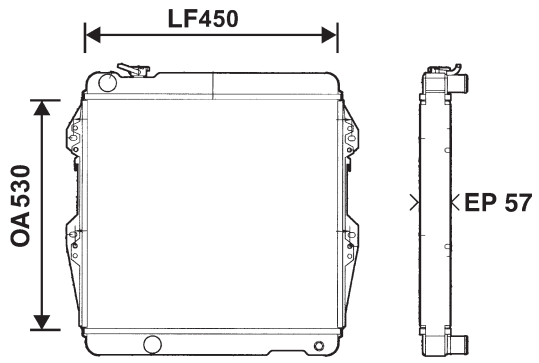


| | | |
|---|---|---|
| VOLKSWAGEN J1640058500 | 475x525x57 | |
| | - | |

## 734498 ALB

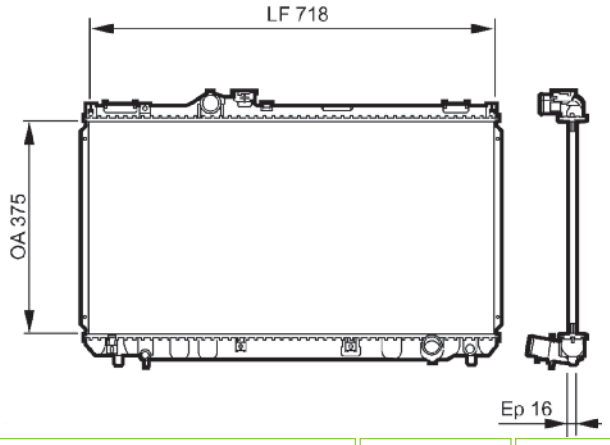


| | | |
|---|---|---|
| LEXUS 1640070630 | 375x718x16 | 34mm L |
| | - | 34mm L |

## 734577 ALB

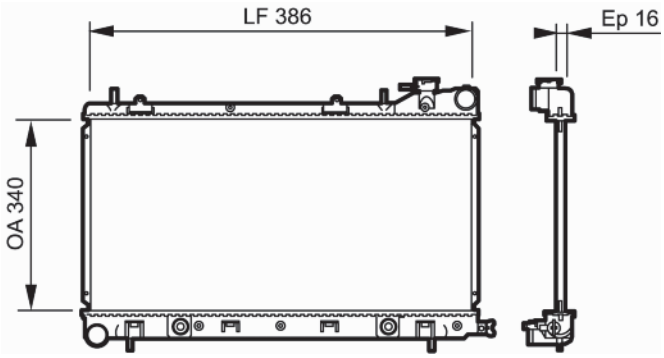


| | | |
|---|---|---|
| SUBARU 45199FC361 | 340x386x16 | 38mm L |
| | + | 38mm L |

## 734499 ALB

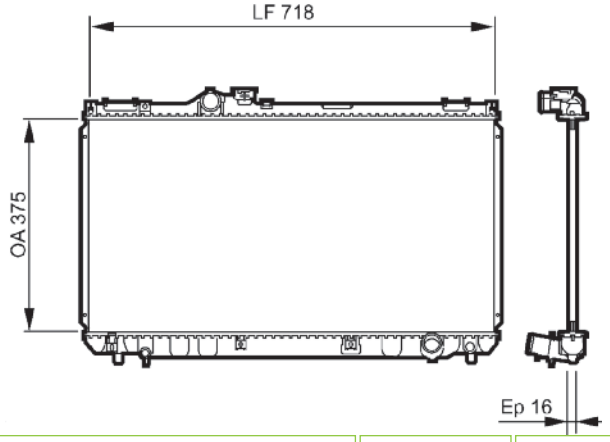


| | | |
|---|---|---|
| LEXUS 1640070620 | 375x718x16 | 34mm L |
| | - | 34mm L |

## 734581 CBS

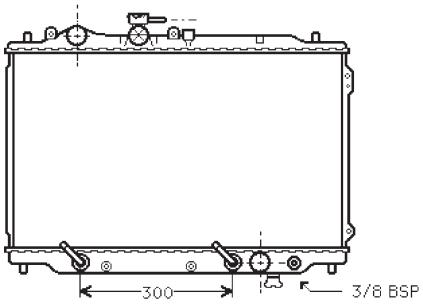


| | | |
|---|---|---|
| MAZDA F2H215200 | 400x648x33 | 35mm L |
| | + | 35mm L |

## 734596 ALB

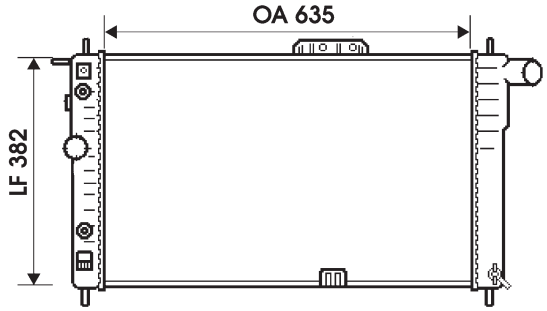


| | | |
|---|---|---|
| DAEWOO 96144850 | 635x382x34 | 35mm L |
| | | 35mm L |

## 734615 ALB

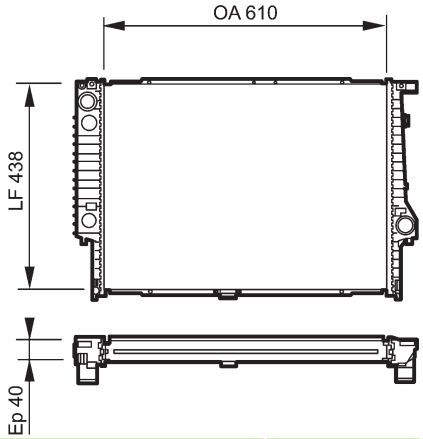


| | | |
|---|---|---|
| BMW 17111723689 | 610x438x40 | 40mm L |
| | | 40mm L |

## 734604 ALB

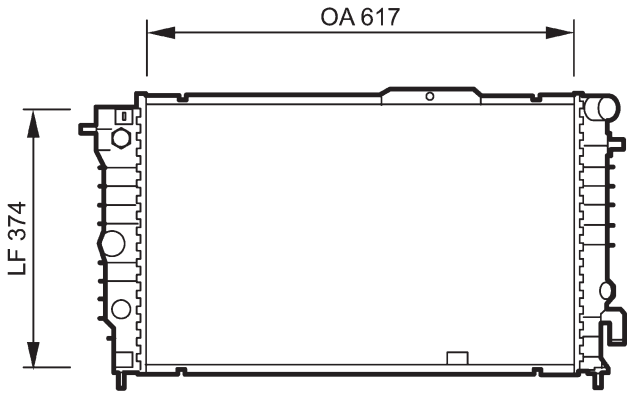


Ep 34

| | | |
|---|---|---|
| OPEL 1300146<br>VAUXHALL 90443911 | 617x374x34 | 34mm L |
| | | 34mm L |

## 734623 CBS

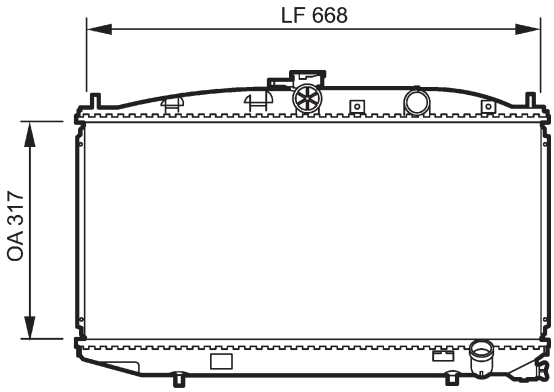


Ep 16

| | | |
|---|---|---|
| HONDA 19010PW0014 | 317x668x16 | 32mm L |
| | | 32mm L |

## 734606 CBS

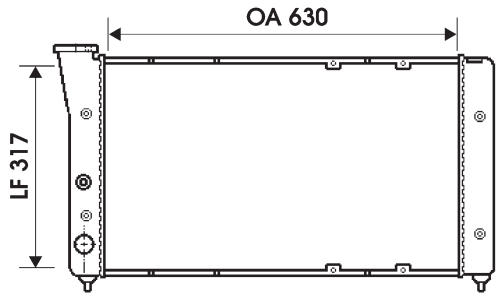


| | | |
|---|---|---|
| VOLKSWAGEN 535121251C | 675x317x33 | 32mm QC |
| | | 32mm QC |

## 734624 ALB

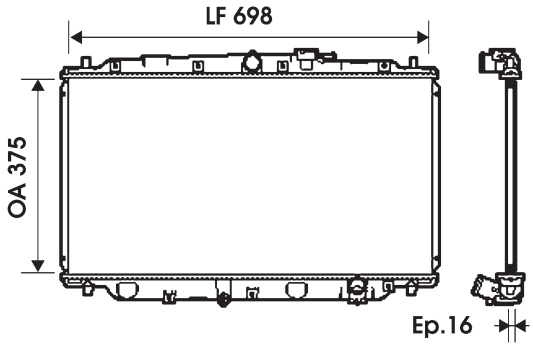


| | | |
|---|---|---|
| HONDA 19010P14A02 | 375x698x16 | 32mm L |
| | | 32mm L |

## 734631 ALB

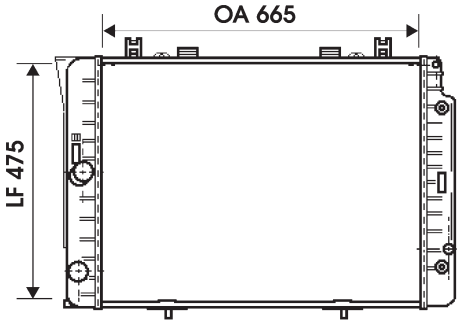


| | | |
|---|---|---|
| MERCEDES 1405002103 | 665x475x40 | 39mm L |
| | + | 39mm L |

## 734669 ALM

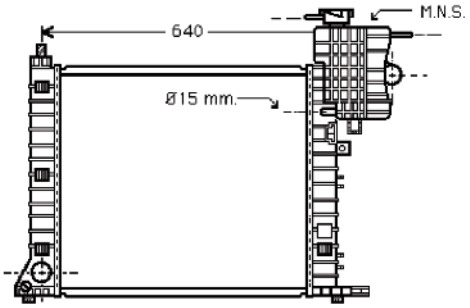


| | | |
|---|---|---|
| MERCEDES 6385013001 | 570x555x26 | 42mm L |
| | - | 42mm L |

## 734662 CBS

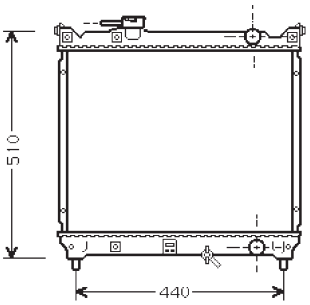


| | | |
|---|---|---|
| SANTANA 1770056B00 | 425x490x27 | 28mm L |
| | - | 28mm L |

## 734671 ALB

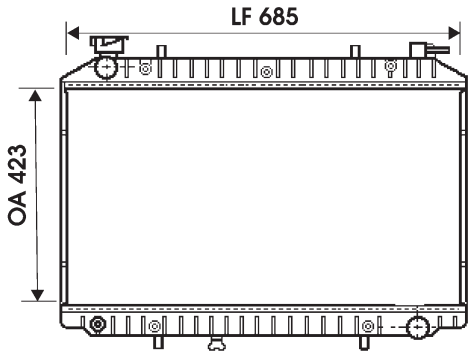


| | | |
|---|---|---|
| NISSAN 214109C002 | 423x685x24 | 35mm L |
| | - | 35mm L |

## 734668 ALB

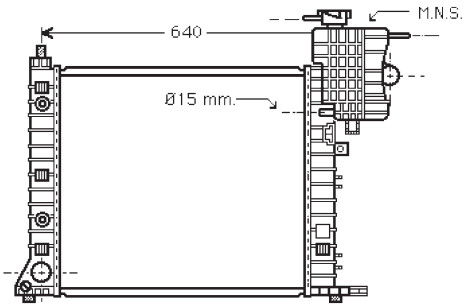


| | | |
|---|---|---|
| MERCEDES 6385012801 | 570x558x42 | 42mm L |
| | + | 42mm L |

## 734674 ALB

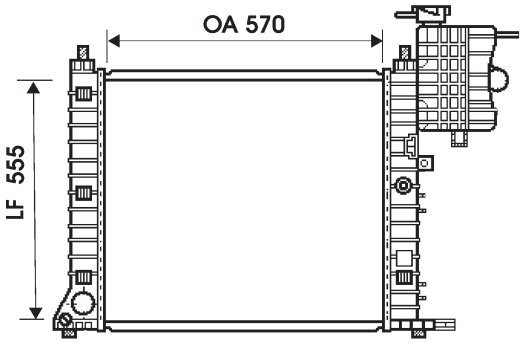


| | | |
|---|---|---|
| MERCEDES 6385011601 | 570x555x26 | 42mm L |
| | - | 42mm L |

## 734689 ALB

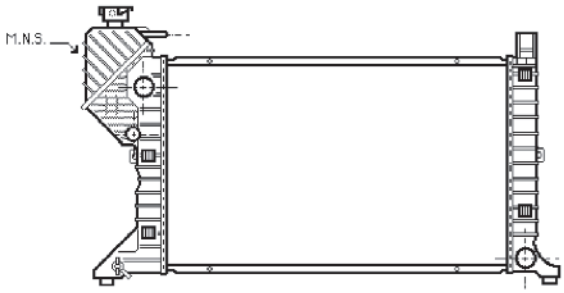


| | | |
|---|---|---|
| MERCEDES 9015003600 | 680x406x42 | 42mm L |
| | | 42mm L |

## 734696 ALB

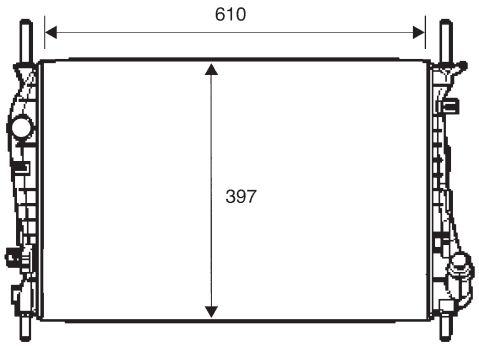


| | | |
|---|---|---|
| FORD 1320515 | 610x397x26 | 33mm QC |
| | | 33mm QC |

## 734692 RA0110930 ALM

Picture not available
Image non disponible
Imagen no disponible
Immagine non disponibile
Nicht verfügbares Bild
Brak zdjęcia
Картина недоступна

| | | |
|---|---|---|
| FIAT 46807378 | 730x305,4x38 | 35mm L |
| | | 35mm L |

## 734699 ALB

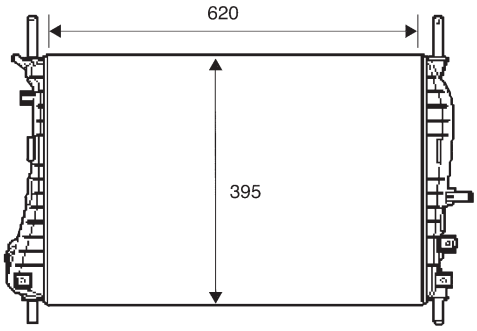


| | | |
|---|---|---|
| FORD 1315633 | 620x395x26 | 33mm QC |
| | | 33mm QC |

## 734695 ALB

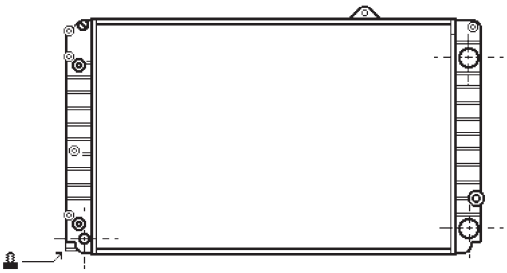

| | | |
|---|---|---|
| AUDI 4D0121251 | 720x440x43 | 32mm L |
| | | 32mm L |

## 734702

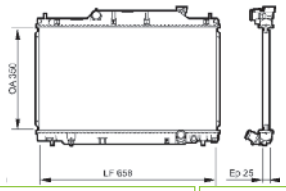


| | | |
|---|---|---|
| HONDA 19010PMAE61 | 350x658x25 | |
| | | |

## 734703 ALB

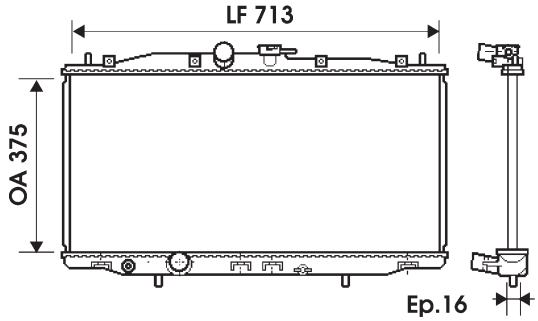


| | | |
|---|---|---|
| HONDA 19010RBAE01 | 375x713x16 | 32mm L |
| | - | 32mm QC |

## 734711 ALB

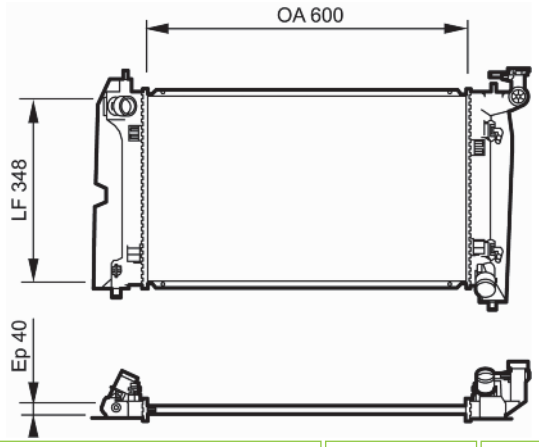


| | | |
|---|---|---|
| TOYOTA 164000D210 | 600x348x40 | 34mm L |
| | + | 34mm L |

## 734706 ALB

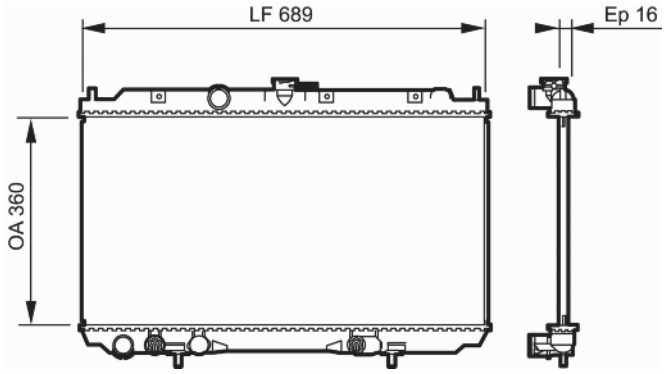


| | | |
|---|---|---|
| NISSAN 21460AV600 | 360x689x16 | 35mm L |
| | + | 35mm L |

## 734712 ALB

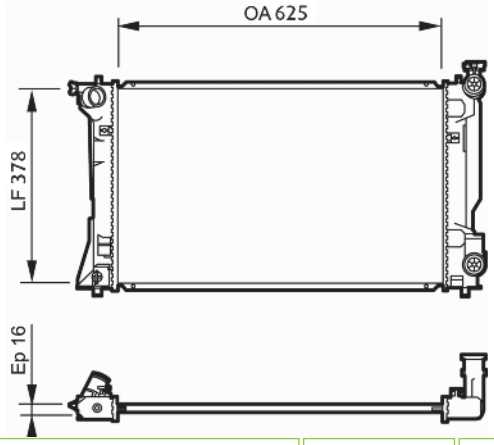


| | | |
|---|---|---|
| TOYOTA 164000H110 | 625x378x16 | 34mm L |
| | - | 34mm L |

## 734708 ALB

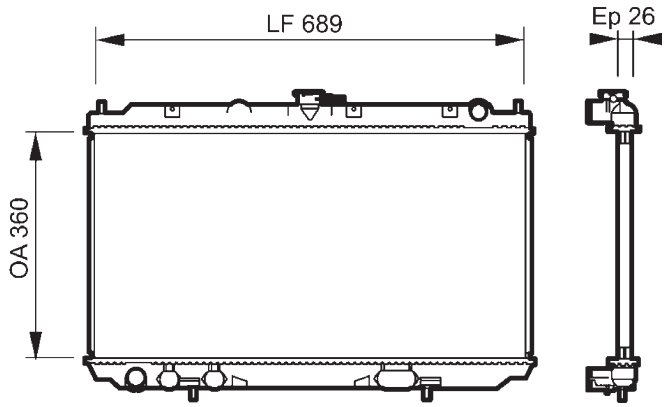


| | | |
|---|---|---|
| NISSAN 21410BN301 | 360x689x26 | 35mm L |
| | - | 35mm L |

## 734714 ALB

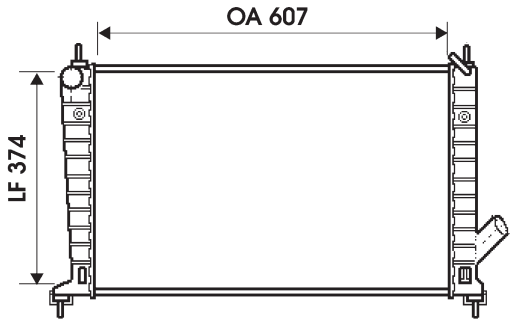


| | | |
|---|---|---|
| SAAB 5193370 | 607x374x27 | 34mm L |
| | - | 34mm L |

## 734716 ALB

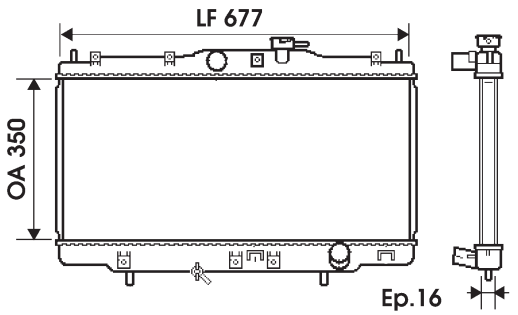


| | | |
|---|---|---|
| HONDA 19010PDAE01 | 350x677x16 | 32mm L |
| - | | 32mm L |

## 734728 ALB

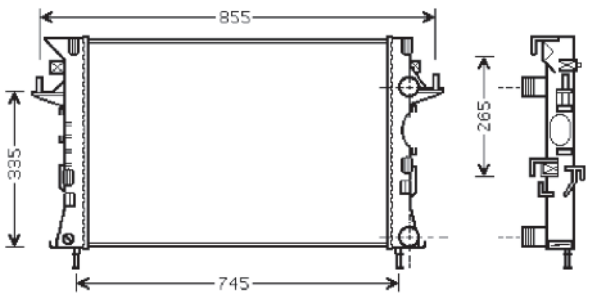


| | | |
|---|---|---|
| RENAULT 8200033729 | 680x438x40 | 32mm L |
| - | | 32mm L |

## 734717 ALB

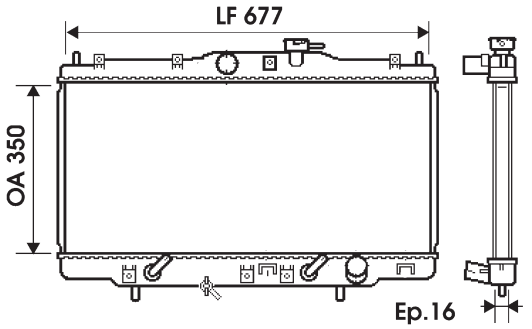


| | | |
|---|---|---|
| HONDA 19010PDAE51 | 350x677x16 | 32mm L |
| + | | 32mm L |

## 734729 ALB

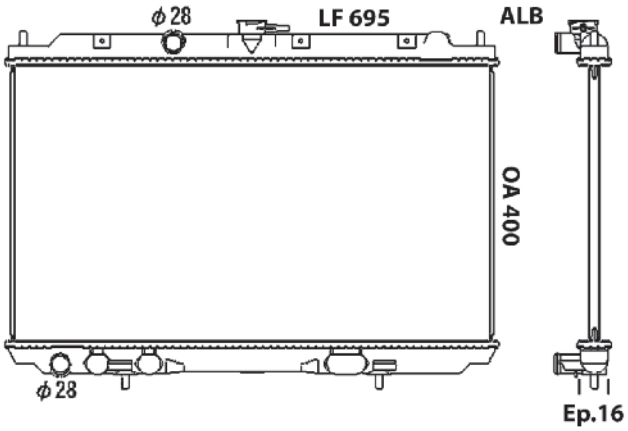


| | | |
|---|---|---|
| NISSAN 21410BU001 | 400x695x27 | 35mm L |
| - | | 35mm L |

## 734723

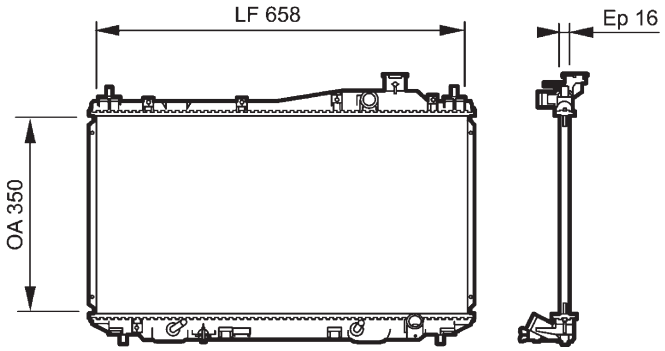


| | | |
|---|---|---|
| HONDA 19010PLCJ51 | 658x350x16 | 28mm L |
| - | | 28mm L |

## 734733 ALB

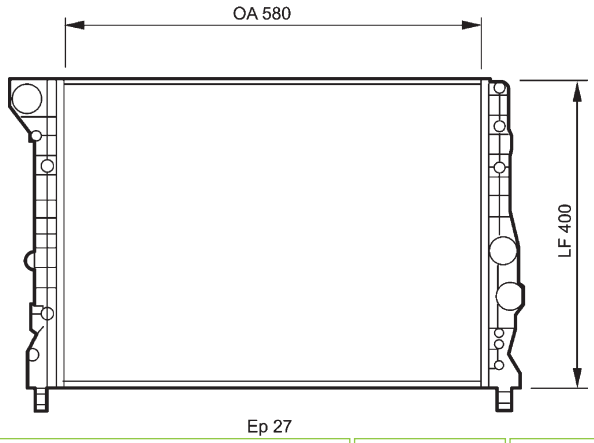


| | | |
|---|---|---|
| ALFA ROMEO 46842843 | 580x400x27 | 35mm QC |
| - | | 35mm L |

## 734734 CBS

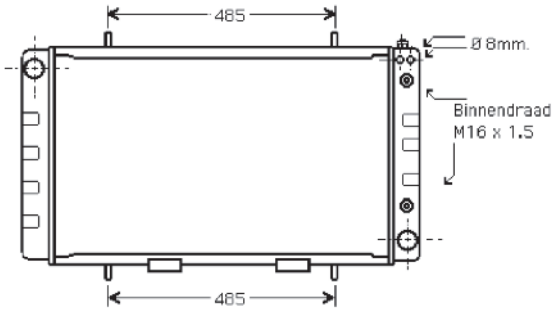


| | | |
|---|---|---|
| LAND ROVER ESR204 | 630x400x48 | 35mm L |
| | + | 35mm L |

## 734738 CBS

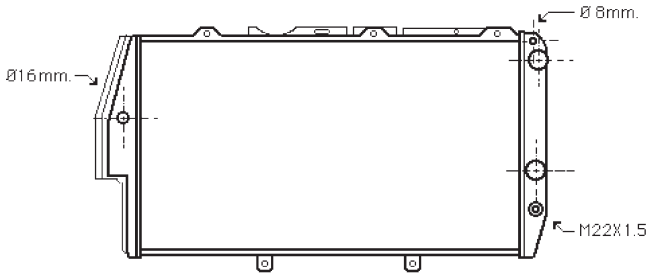


| | | |
|---|---|---|
| AUDI 447121251H | 615x310x45 | 32mm L |
| | - | 32mm L |

## 734736 ALB

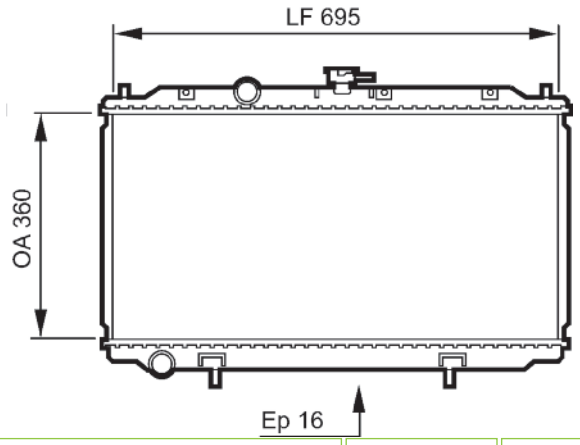


| | | |
|---|---|---|
| NISSAN 21410BM400 | 360x695x16 | 28mm L |
| | - | 28mm L |

## 734739 ALB

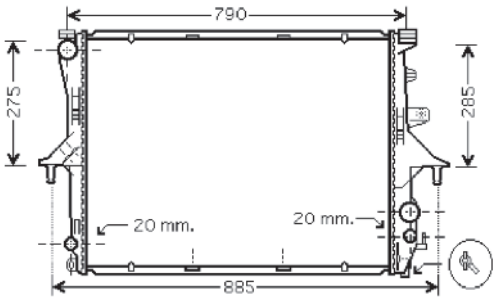


| | | |
|---|---|---|
| VOLKSWAGEN 7L6121253C | 710x551x40 | 38mm L |
| | - | 38mm L |

## 734737 ALB

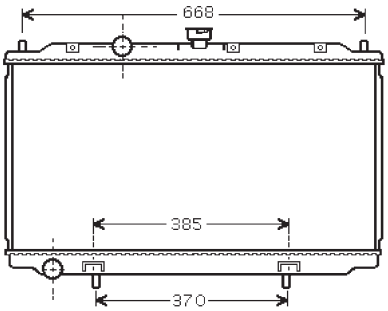


| | | |
|---|---|---|
| NISSAN 21410BN700 | 360x690x16 | 28mm L |
| | - | 28mm L |

## 734740 ALB

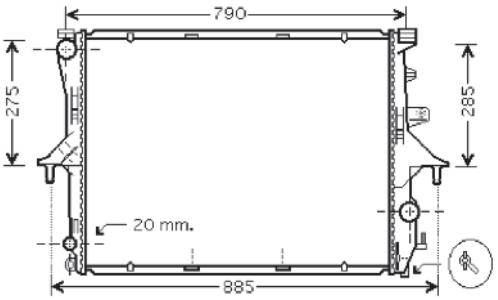


| | | |
|---|---|---|
| VOLKSWAGEN 7L6121253A | 710x551x40 | 38mm L |
| | - | 38mm L |

## 734741 ALB

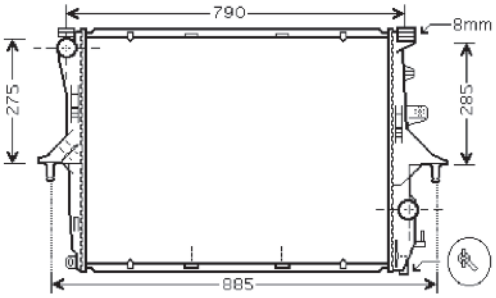


| | | |
|---|---|---|
| AUDI 7L0121253A<br>PORSCHE 95510614200<br>VOLKSWAGEN 7L0121253A | 710x551x40 | |
| - | | L |

## 734751 ALM

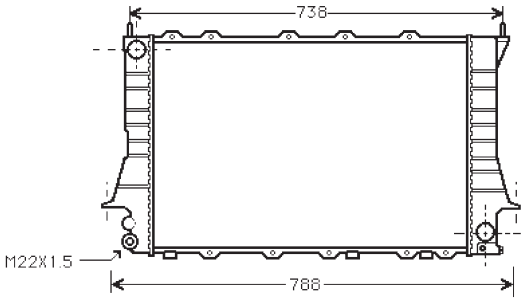


| | | |
|---|---|---|
| AUDI 4A0121251Q | 632x412x34 | 32mm L |
| - | | 32mm L |

## 734747 ALB

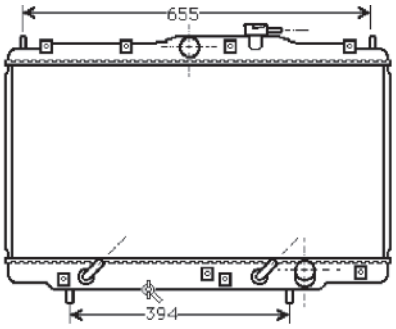


| | | |
|---|---|---|
| HONDA 19010P1EE51 | 425x678x16 | 32mm L |
| - | | 32mm L |

## 734752 ALB

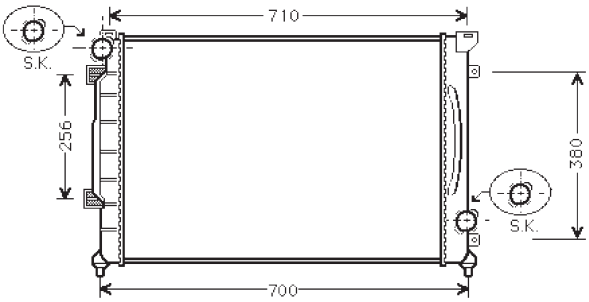


| | | |
|---|---|---|
| AUDI 4B0121251 | 632x449x30 | 32mm QC |
| + | | 32mm QC |

## 734749 ALB

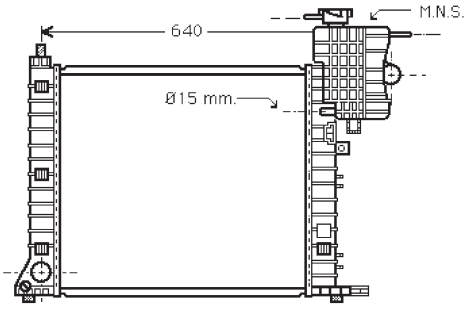


| | | |
|---|---|---|
| MERCEDES 6385012701 | 570x558x42 | 42mm L |
| - | | 42mm L |

## 734753 ALB

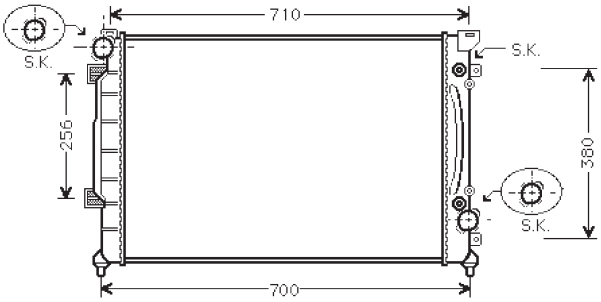


| | | |
|---|---|---|
| AUDI 4B0121251AK | 632x449x30 | 32mm QC |
| + | | 32mm QC |

## 734754 ALB

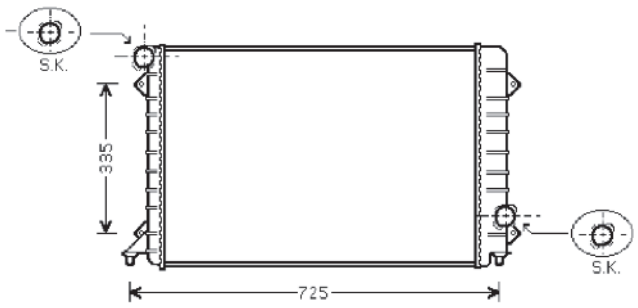


| | | |
|---|---|---|
| AUDI 4D0121251J | 632x449x30 | 32mm QC |
| | | 32mm QC |

## 734762 ALB

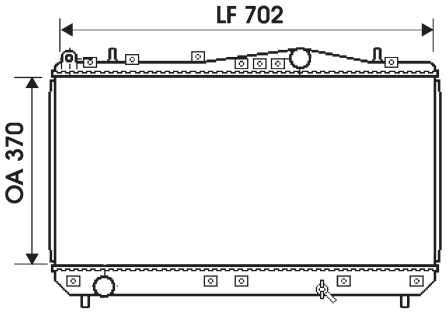


| | | |
|---|---|---|
| DAEWOO 96271477 | 370x702x19 | 34mm L |
| | | 34mm L |

## 734760 CBS

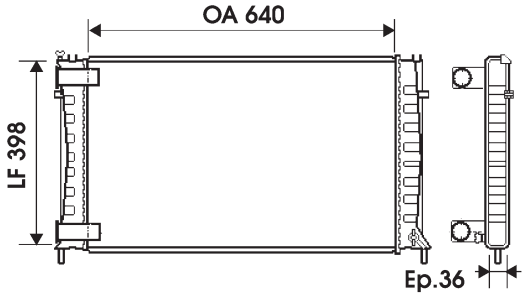


| | | |
|---|---|---|
| CITROEN 133032 | 640x398x36 | 36mm L |
| | | 36mm L |

## 734764 ALB

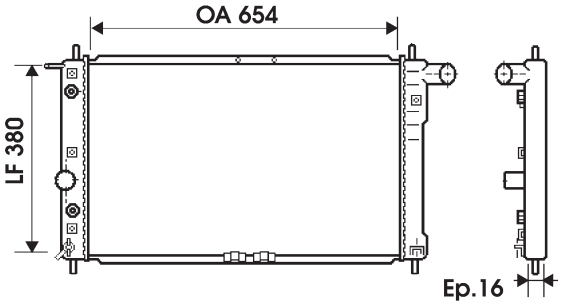


| | | |
|---|---|---|
| DAEWOO 96351103 | 654x380x16 | 34mm L |
| | | 34mm L |

## 734761 ALB

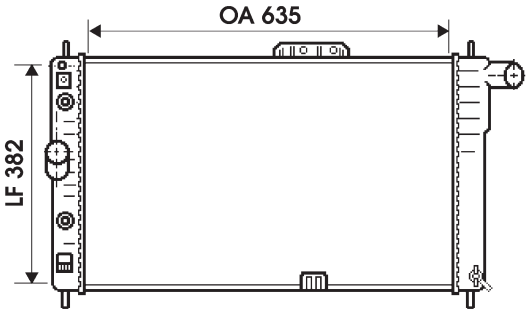


| | | |
|---|---|---|
| DAEWOO 96182648 | 635x382x34 | 35mm L |
| | | 35mm L |

## 734765 ALB

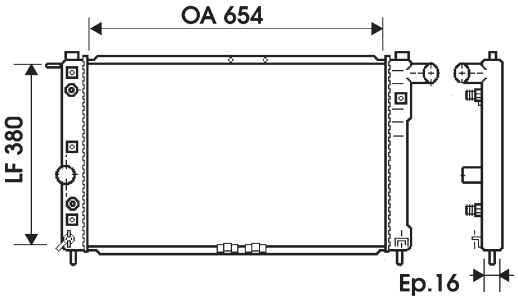


| | | |
|---|---|---|
| DAEWOO 96351931 | 654x380x16 | 34mm L |
| | | 34mm L |

## 734766 ALB

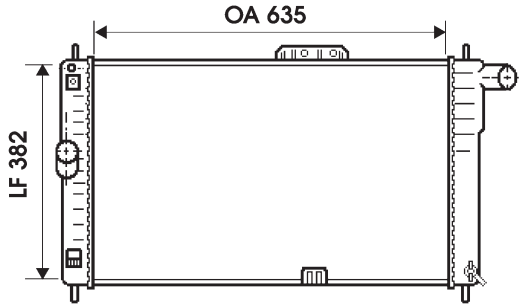


| | | | |
|---|---|---|---|
| DAEWOO | 96109532 | 635x382x34 | 35mm L |
| | | - | 35mm L |

## 734785 ALB

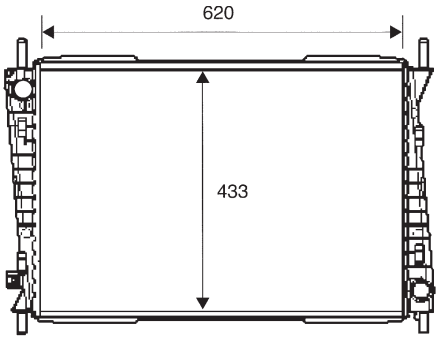


| | | | |
|---|---|---|---|
| JAGUAR | C2S1231 | 620x433x26 | 33mm L |
| | | - | 32mm L |

## 734767 ALB

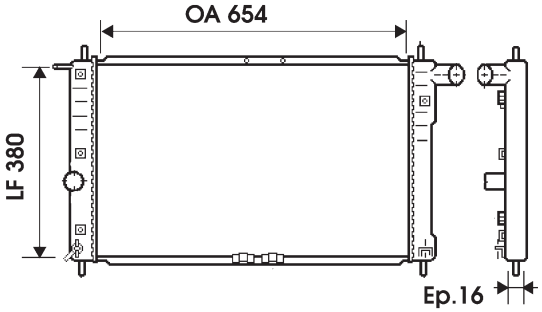


| | | | |
|---|---|---|---|
| DAEWOO | 96273596 | 654x380x16 | 34mm L |
| | | - | 34mm L |

## 734788 ALB

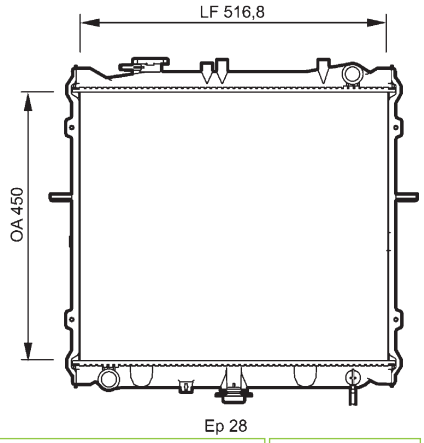


| | | | |
|---|---|---|---|
| KIA | 0K01215200 | 450x516,8x28 | 35mm L |
| | | - | 35mm L |

## 734772 ALB

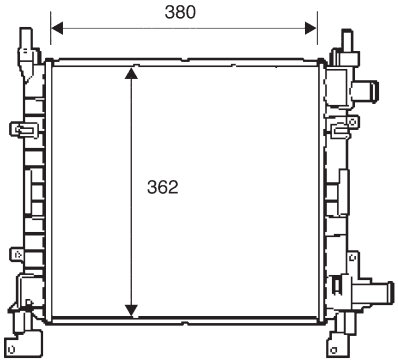


| | | | |
|---|---|---|---|
| FORD | 1025533 | 380x362x26 | 27mm L |
| | | - | 27mm L |

## 734793 ALB

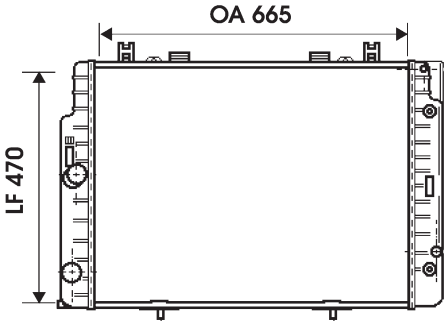


| | | | |
|---|---|---|---|
| MERCEDES | 1405000403 | 665x470x40 | 38mm L |
| | | + | 38mm L |

## 734798 ALB

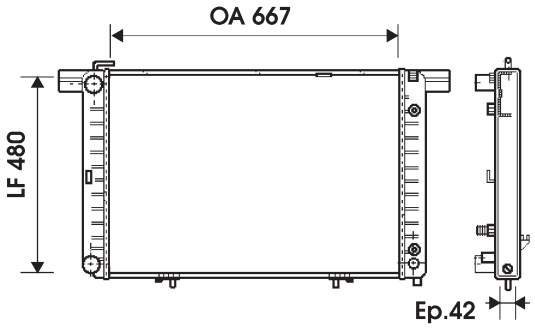


| | | |
|---|---|---|
| MERCEDES 1295001003 | 667x480x42 | 36mm L |
| | + | 36mm L |

## 734805 ALB

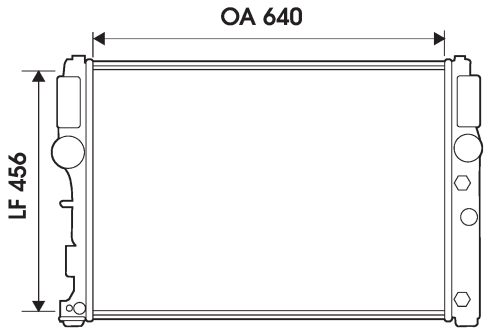


| | | |
|---|---|---|
| MERCEDES 2115001302 | 640x450x18 | 48mm QC |
| | + | 48mm QC |

## 734801 ALB

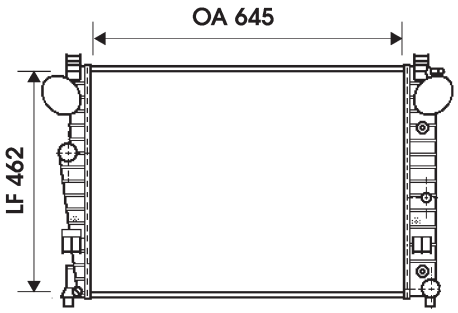


| | | |
|---|---|---|
| MERCEDES 2205000003 | 645x462x24 | 42mm L |
| | + | 42mm L |

## 734806 ALB

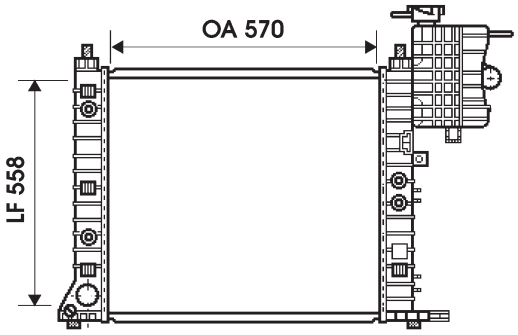


| | | |
|---|---|---|
| MERCEDES 6385012201 | 570x558x42 | 42mm L |
| | + | 42mm L |

## 734803 ALB

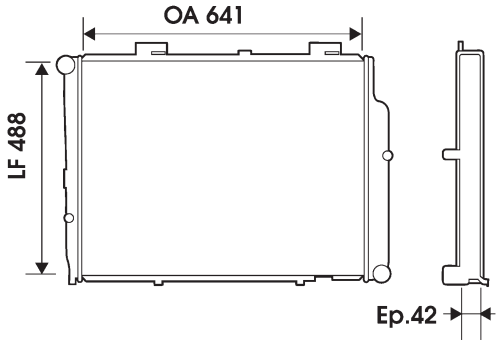


| | | |
|---|---|---|
| MERCEDES 2105005803 | 641x488x42 | 38mm L |
| | - | 38mm L |

## 734807 ALB

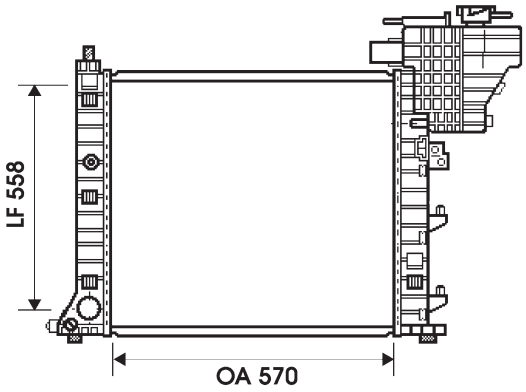


| | | |
|---|---|---|
| MERCEDES 6385012401 | 570x558x42 | 42mm L |
| | - | 42mm L |

## 734809 CBS

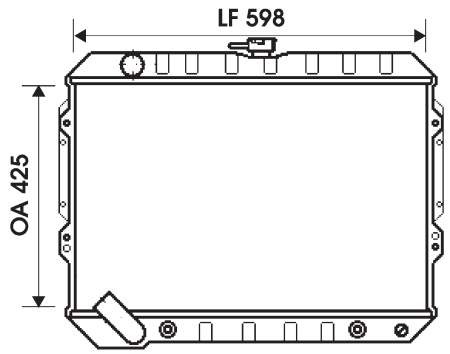


| | | |
|---|---|---|
| MITSUBISHI MB538806 | 425x598 | 35mm L |
| | | 35mm L |

## 734827 ALB

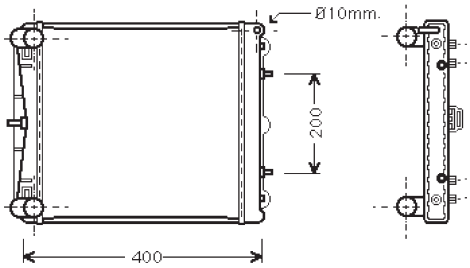


| | | |
|---|---|---|
| PORSCHE 99610613251 | 336x358x34 | 35mm L |
| | | 35mm L |

## 734819 ALB

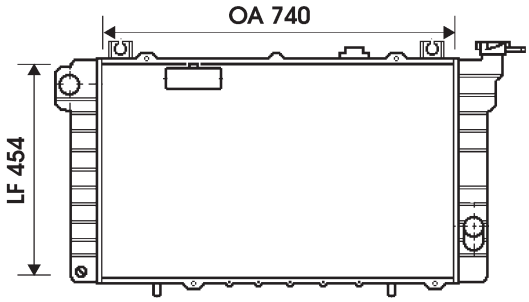


| | | |
|---|---|---|
| NISSAN 21400G9802 | 740x454x34 | L |
| | | L |

## 734828 ALB

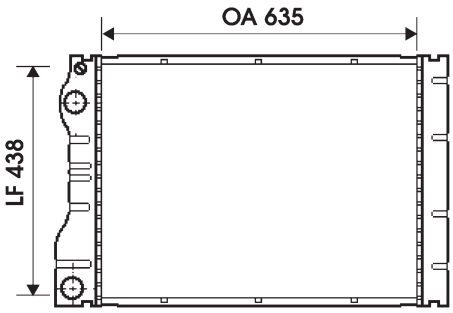


| | | |
|---|---|---|
| RENAULT 6025312321 | 635x438x32 | 32mm L |
| | | 32mm L |

## 734826 ALB

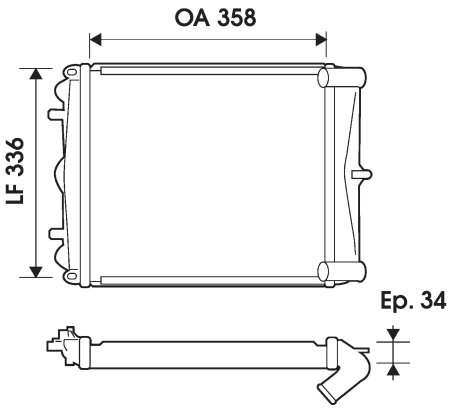


| | | |
|---|---|---|
| PORSCHE 99610613151 | 336x358x34 | 35mm L |
| | | 35mm L |

## 734829 CBS

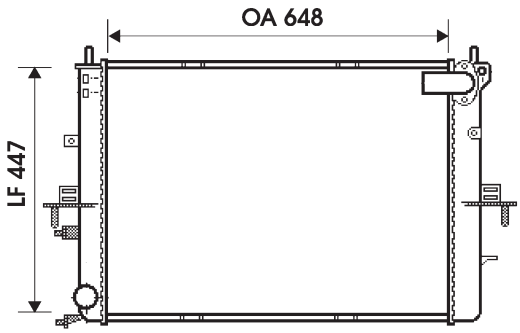


| | | |
|---|---|---|
| MG PCC000960<br>ROVER PCC000960 | 648x447x32 | 32mm L |
| | | 32mm L |

## 734830 ALB

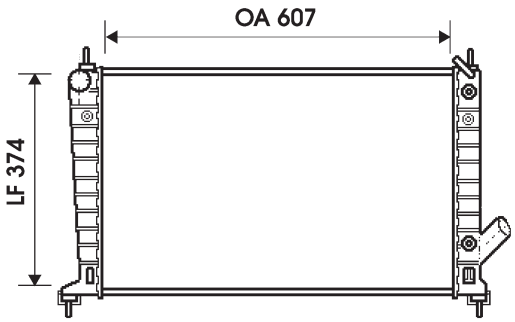


| | | | |
|---|---|---|---|
| SAAB | 5193388 | 607x374x27 | 34mm L |
| | | + | 34mm L |

## 734839 CBS

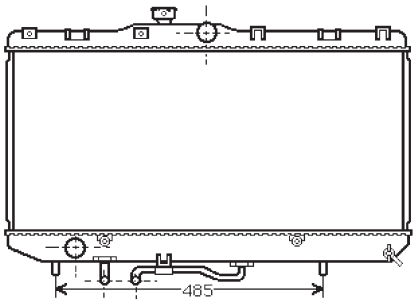


| | | | |
|---|---|---|---|
| TOYOTA | 1640016301 | 325x699x27 | 31mm L |
| | | + | 31mm L |

## 734831 ALB

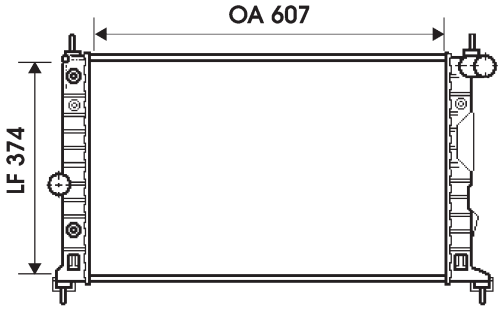


| | | | |
|---|---|---|---|
| SAAB | 4575734 | 607x374x27 | 35mm L |
| | | + | 35mm L |

## 734840 ALB

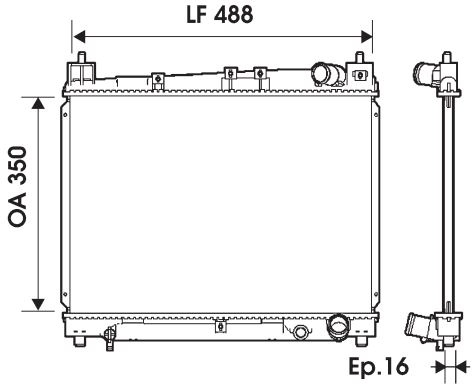


| | | | |
|---|---|---|---|
| TOYOTA | 1640021060 | 350x488x16 | 31mm L |
| | | - | 31mm L |

## 734835 CBS

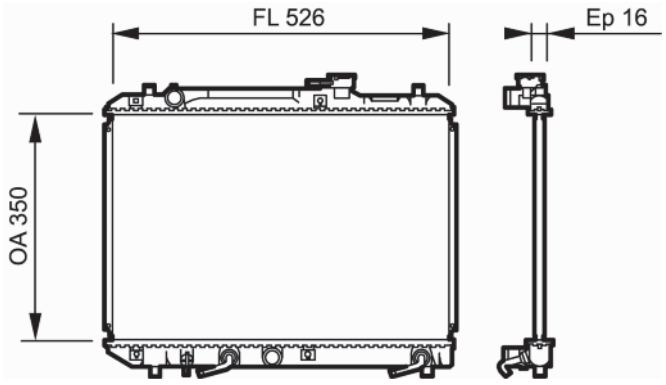


| | | | |
|---|---|---|---|
| SUZUKI | 1770062G01 | 350x526x16 | 28mm L |
| | | + | 28mm L |

## 734841 ALB

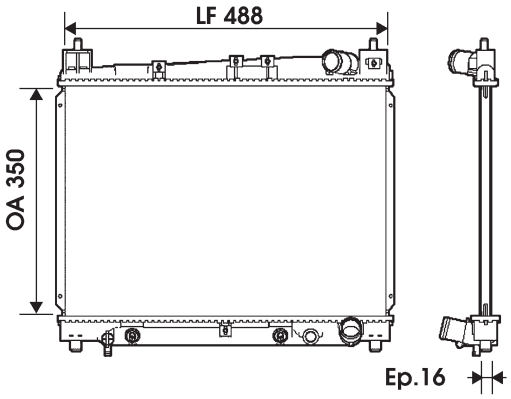


| | | | |
|---|---|---|---|
| TOYOTA | 1640021070 | 350x488x16 | 31mm L |
| | | + | 31mm L |

## 734842 ALB

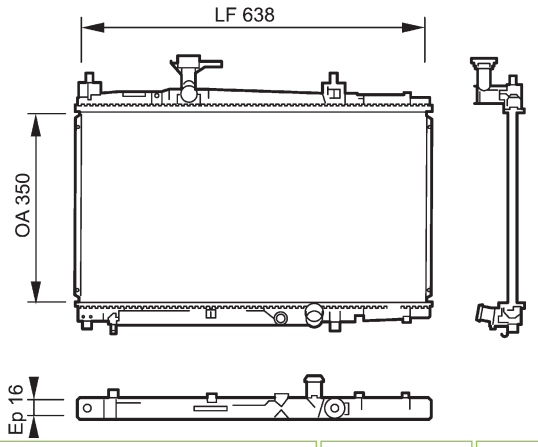


| | | |
|---|---|---|
| TOYOTA 1640033070 | 350x641x16 | 31mm L |
| - | | 31mm L |

## 734850 ALB

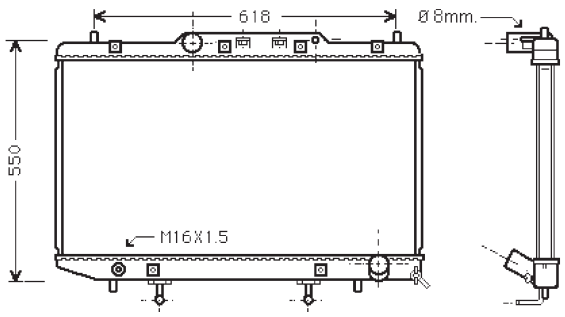


| | | |
|---|---|---|
| TOYOTA 164006A180 | 475x699x27 | 38mm L |
| + | | 38mm L |

## 734845 ALB

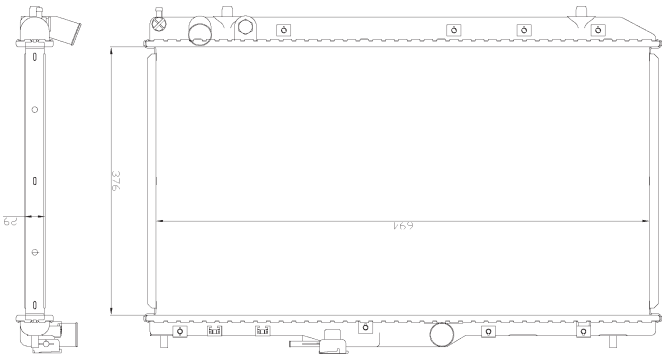


| | | |
|---|---|---|
| TOYOTA 164000B030 | 378x694x29 | 31mm L |
| - | | 31mm L |

## 734853 ALM

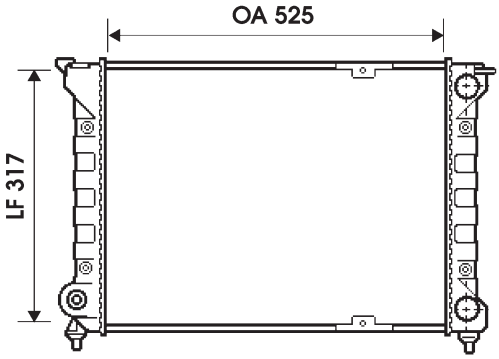


| | | |
|---|---|---|
| VOLKSWAGEN 191121253N | 525x317x34 | |
| - | | L |

## 734848 ALB

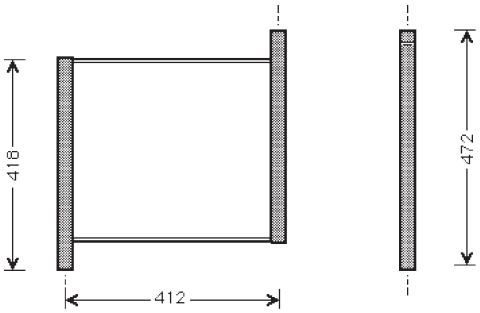


| | | |
|---|---|---|
| MCC 0003428V006000000 | 341x380x14 | L |
| - | | L |

## 734855 ALB

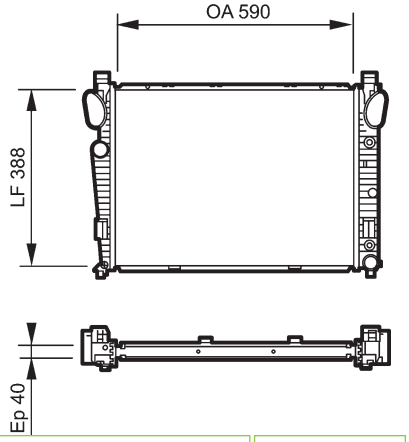


| | | |
|---|---|---|
| VOLVO 8601449 | 590x388x40 | |
| - | | |

## 734856 ALB

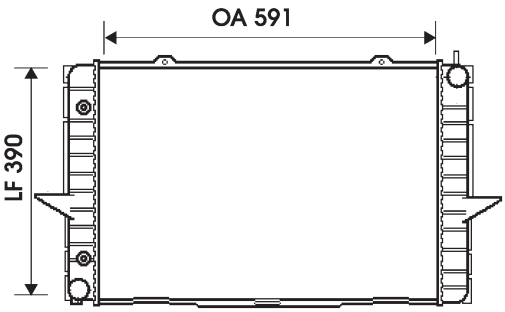


| | | |
|---|---|---|
| VOLVO 8602558 | 590x386x34 | 37mm L |
| + | | 37mm L |

## 734894 RAB038 ALB

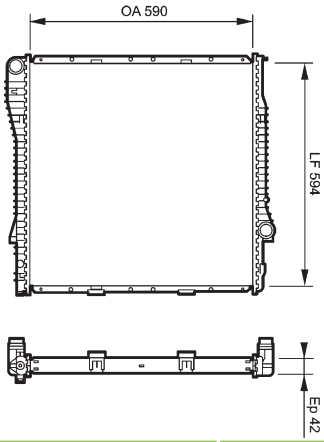


| | | |
|---|---|---|
| BMW 17101439101 | 590x594x42 | 38mm QC |
| - | | 38mm QC |

## 734859 ALB

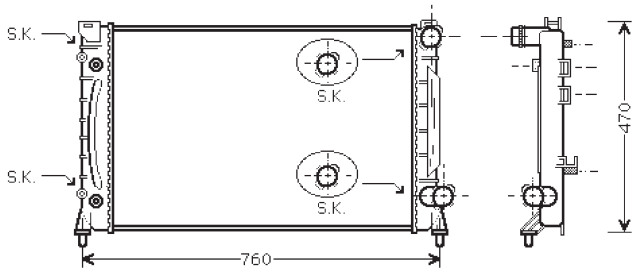


| | | |
|---|---|---|
| AUDI 4B3121251D | 682x440x43 | 32mm QC |
| + | | 32mm QC |

## 734895 RAB039 ALB

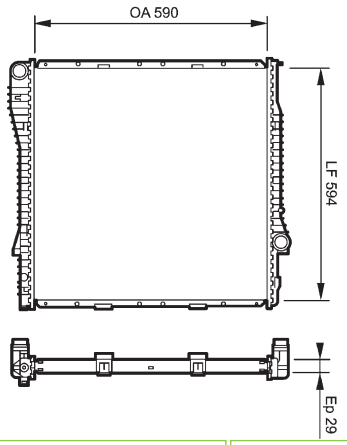


| | | |
|---|---|---|
| BMW 17107544668 | 590x594x29 | 38mm QC |
| - | | 38mm QC |

## 734862 ALB

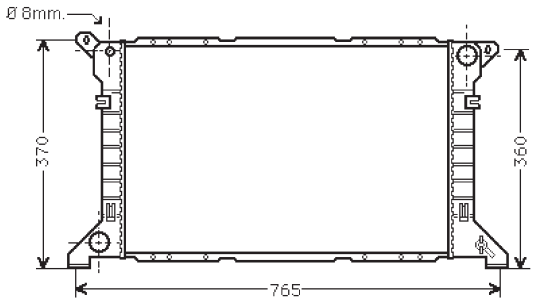


| | | |
|---|---|---|
| FORD 1030491 | 600x333x43 | L |
| - | | L |

## 734896 RAB040 ALB

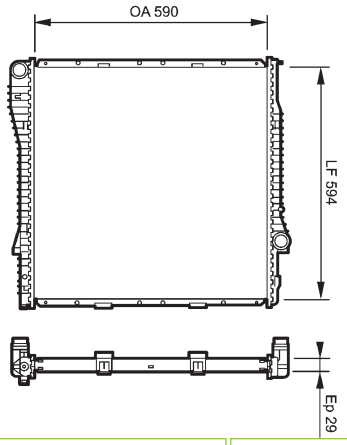


| | | |
|---|---|---|
| BMW 17107544669 | 590x594x29 | 38mm QC |
| - | | 38mm QC |

## 734897 ALB

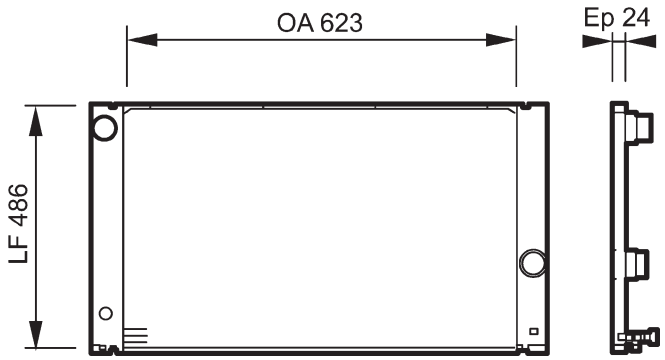


| | | |
|---|---|---|
| BMW 17117519209 | 623x486x24 | 38mm L |
| - | | 38mm L |

## 734905 ALB

Picture not available
Image non disponible
Imagen no disponible
Immagine non disponibile
Nicht verfügbares Bild
Brak zdjęcia
Картина недоступна

| | | |
|---|---|---|
| HYUNDAI 2531026410 | 389x725x26 | 35mm L |
| - | | 35mm L |

## 734898 ALB

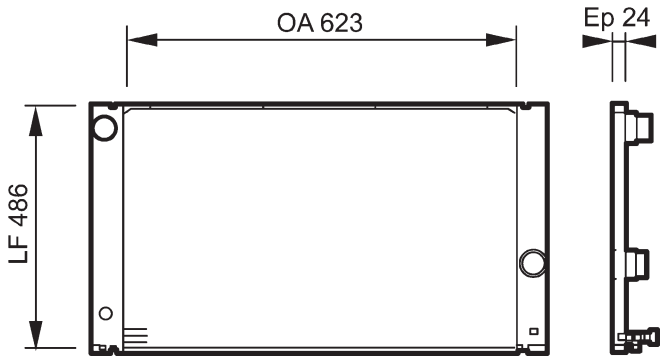


| | | |
|---|---|---|
| BMW 17117519212 | 623x486x24 | 38mm L |
| - | | 38mm L |

## 734909 ALB

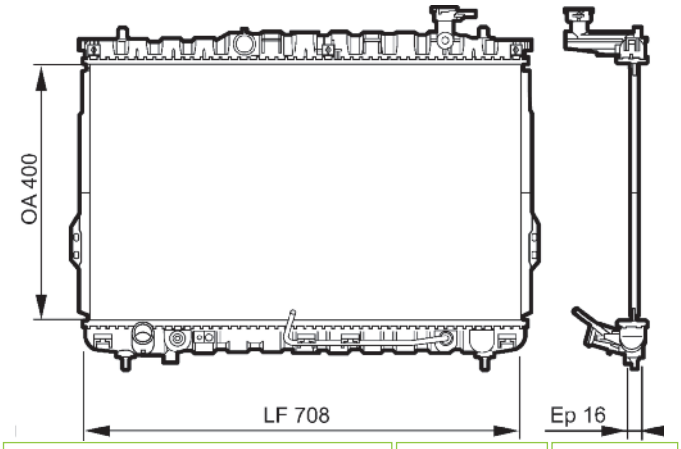


| | | |
|---|---|---|
| HYUNDAI 2531026070 | 400x708x16 | 35mm L |
| + | | 35mm L |

## 734903 ALB

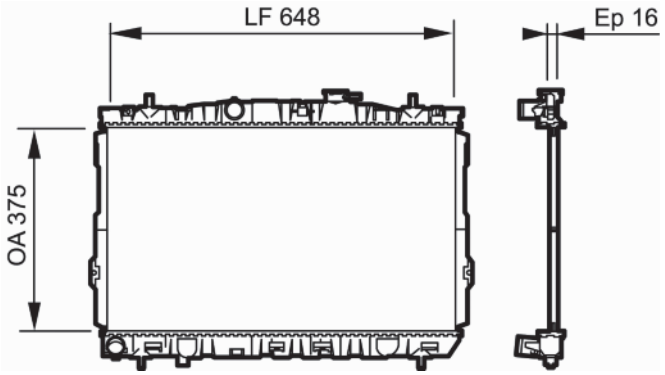


| | | |
|---|---|---|
| HYUNDAI 253102D100 | 375x648x16 | 33mm L |
| - | | 33mm L |

## 734916 ALB

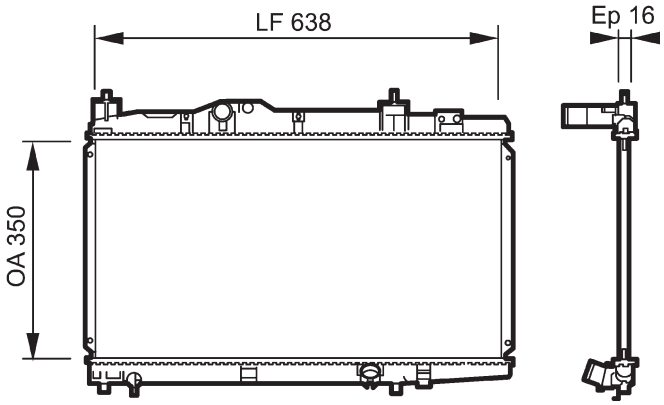


| | | |
|---|---|---|
| TOYOTA 164000N011 | 350x638x16 | 31mm L |
| - | | 31mm L |

## 734917 ALB

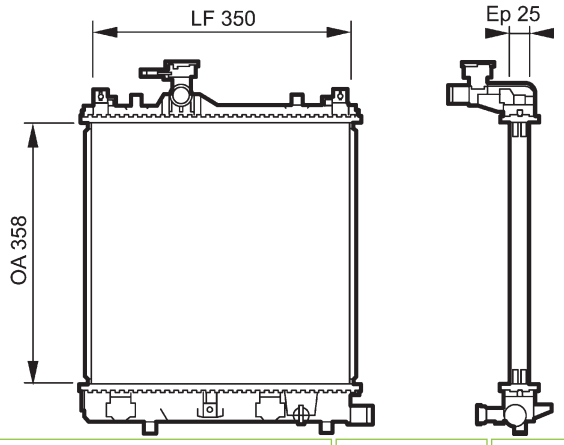


| | | |
|---|---|---|
| SUZUKI 1770075F00 | 350x358x25 | 25mm L |
| | | 25mm L |

## 734921 RM1582 ALM

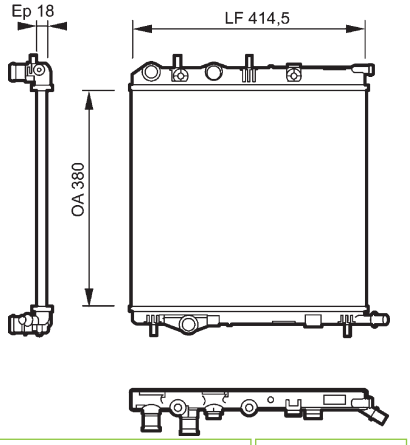


| | | |
|---|---|---|
| CITROEN 1330Q0<br>PEUGEOT 1330Q0 | 380x414,5x18 | |
| | | 28mm L |

## 734918 CBS

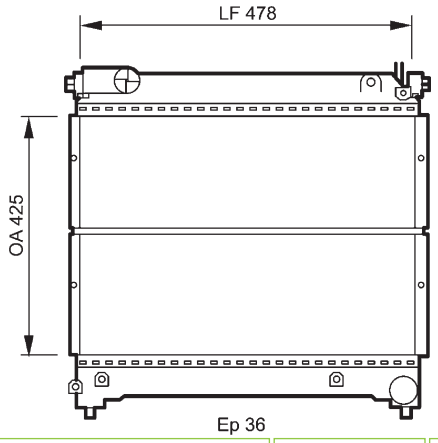


| | | |
|---|---|---|
| SUZUKI 1770084CB0 | 425x478x36 | 36mm L |
| | | 36mm L |

## 734922 RA1423

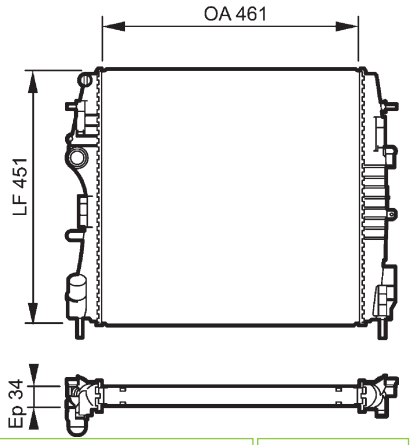


| | | |
|---|---|---|
| RENAULT 8200384071 | 461x451x34 | |
| | | 32mm L |

## 734919 CBS

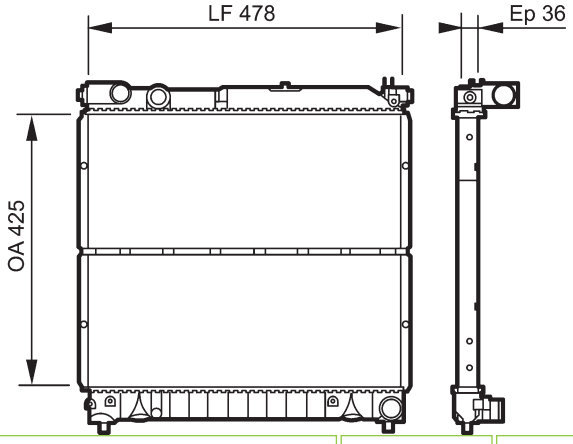


| | | |
|---|---|---|
| SUZUKI 1770086CB0 | 425x478x36 | L |
| | | L |

## 734923 RM1536 ALM

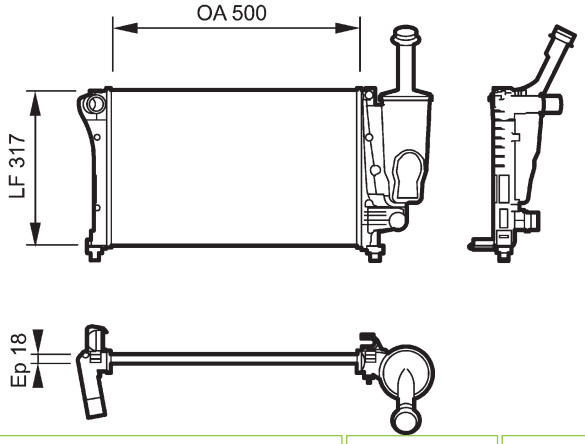


| | | |
|---|---|---|
| FIAT 51773189 | 501x317x18 | |
| | | |

## 734924 RM1537 ALM

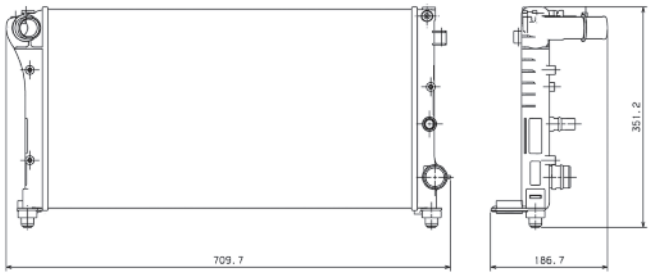


| | | |
|---|---|---|
| FIAT 51773192 | 581x317x18 | |
| | - | |

## 734928 RM1598 ALM

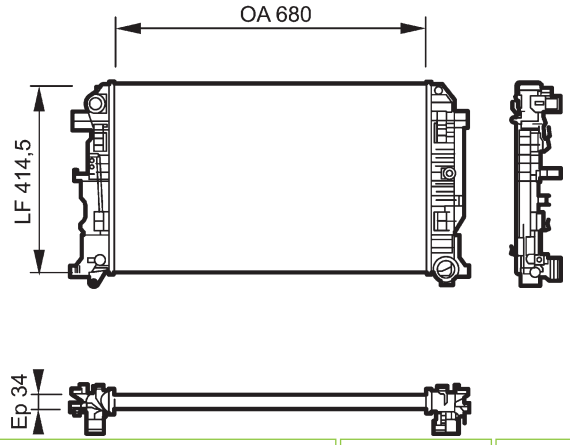


| | | |
|---|---|---|
| MERCEDES 9065000202 | 680x414,5x34 | |
| | - | |

## 734926 RM1596 ALM

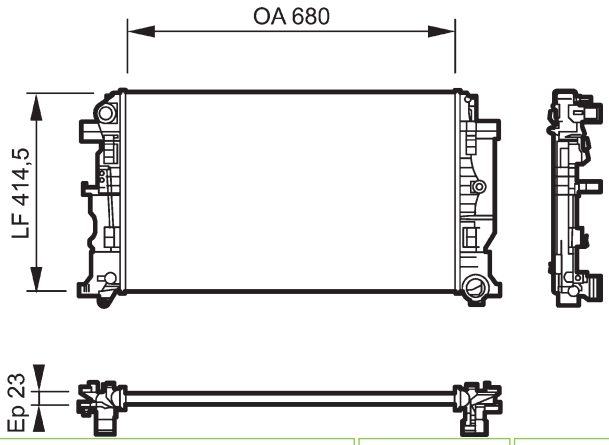


| | | |
|---|---|---|
| MERCEDES 9065000002 | 680x414,5x23 | |
| | - | |

## 734929 RM1599 ALM

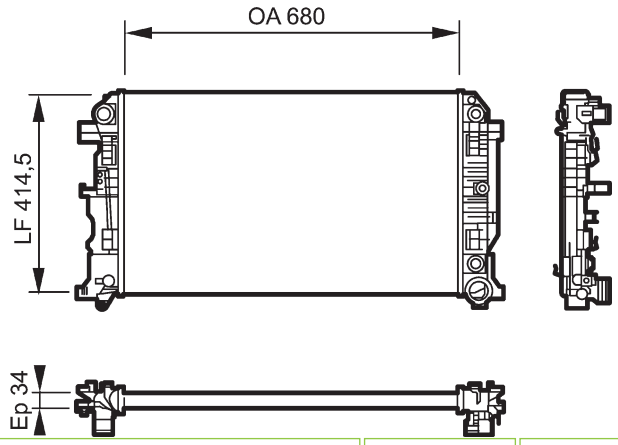


| | | |
|---|---|---|
| MERCEDES 9065000402 | 680x414,5x34 | |
| | + | |

## 734927 RM1597 ALM

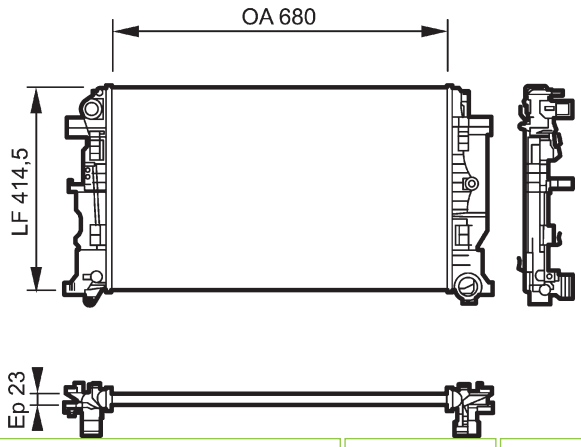


| | | |
|---|---|---|
| VOLKSWAGEN 2E0121253B | 680x414,5x23 | |
| | - | |

## 734930 RM1600 ALM

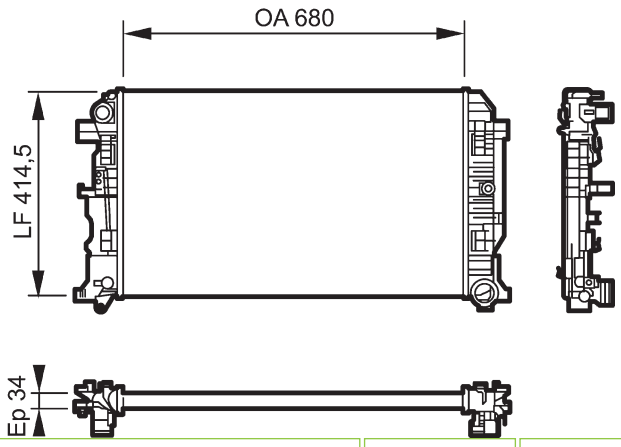


| | | |
|---|---|---|
| VOLKSWAGEN 2E0121253 | 680x414,5x34 | |
| | - | |

## 734931 RA1538 ALB

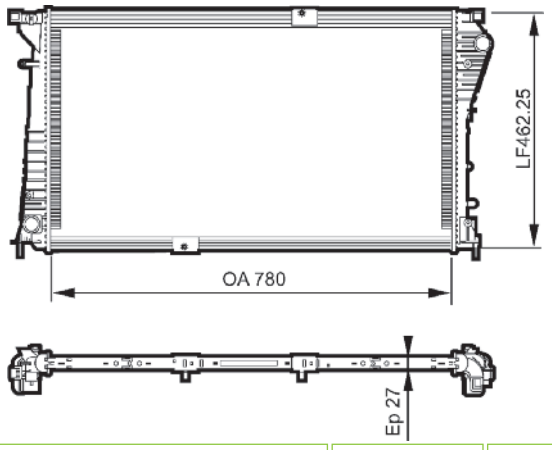


| | | |
|---|---|---|
| VAUXHALL 93857125 | 462x780x27 | |
| | - | |

## 734941 RA1422

Picture not available
Image non disponible
Imagen no disponible
Immagine non disponibile
Nicht verfügbares Bild
Brak zdjęcia
Картина недоступна

| | | |
|---|---|---|
| MERCEDES 2035002003 | | |
| | - | |

## 734932 RA1584 ALB

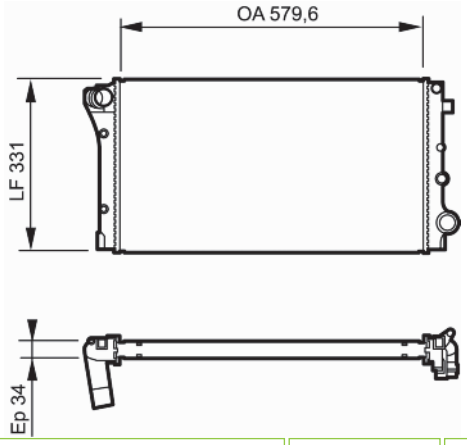


| | | |
|---|---|---|
| FIAT 51773195 | 579,6x331x34 | 35mm L |
| | - | 35mm QC |

## 734945 RA1392

Picture not available
Image non disponible
Imagen no disponible
Immagine non disponibile
Nicht verfügbares Bild
Brak zdjęcia
Картина недоступна

| | | |
|---|---|---|
| MERCEDES 2215000203 | | |
| | - | |

## 734938 RA1586 ALB

Picture not available
Image non disponible
Imagen no disponible
Immagine non disponibile
Nicht verfügbares Bild
Brak zdjęcia
Картина недоступна

| | | |
|---|---|---|
| MERCEDES 2115003502 | 782x488x34 | |
| | - | |

## 734946 RA1537 ALB

Picture not available
Image non disponible
Imagen no disponible
Immagine non disponibile
Nicht verfügbares Bild
Brak zdjęcia
Картина недоступна

| | | |
|---|---|---|
| OPEL 4416948<br>RENAULT 8200411166<br>VAUXHALL 93854164 | 558x462,2x27 | 35mm L |
| | - | 35mm L |

## 734949 ALB

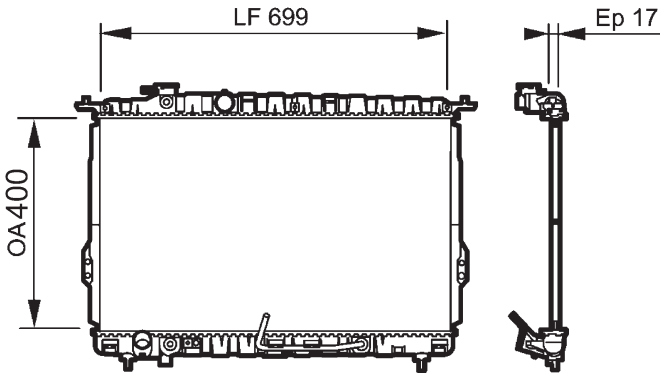


| | | |
|---|---|---|
| HYUNDAI 2531038050<br>KIA 2531038050 | 345x699x17 | 35mm L |
| - | | 35mm L |

## 734960 ALB

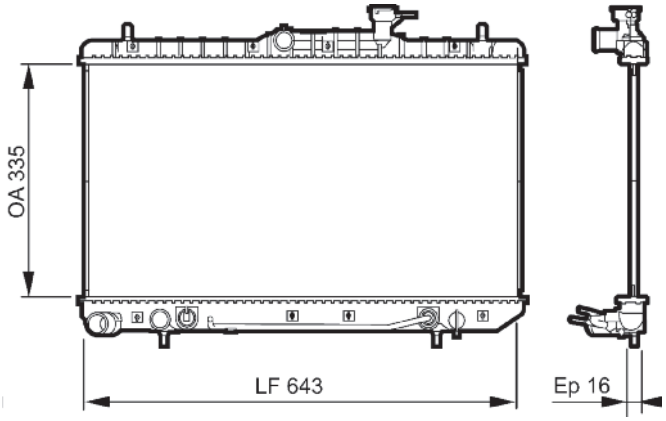


| | | |
|---|---|---|
| HYUNDAI 2531025152 | 335x643x16 | 33mm L |
| + | | 33mm L |

## 734950 ALB

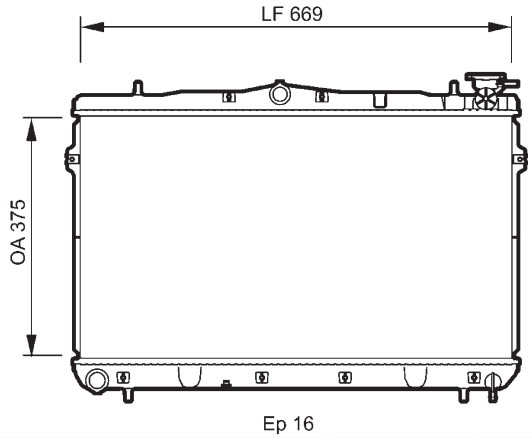


| | | |
|---|---|---|
| HYUNDAI 2531029010 | 375x669x16 | 33mm L |
| - | | 33mm L |

## 734965 ALB

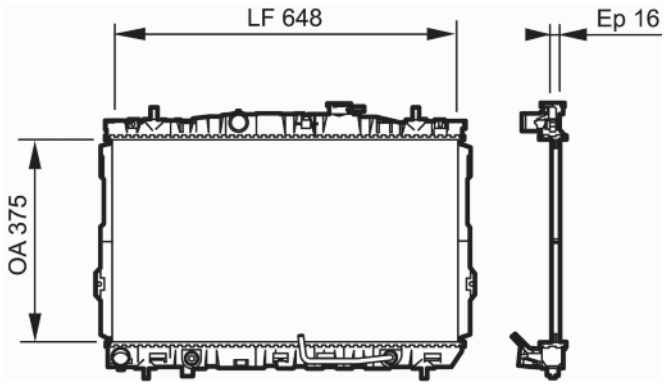


| | | |
|---|---|---|
| HYUNDAI 253102D110 | 375x648x16 | 33mm L |
| + | | 33mm L |

## 734953 ALB

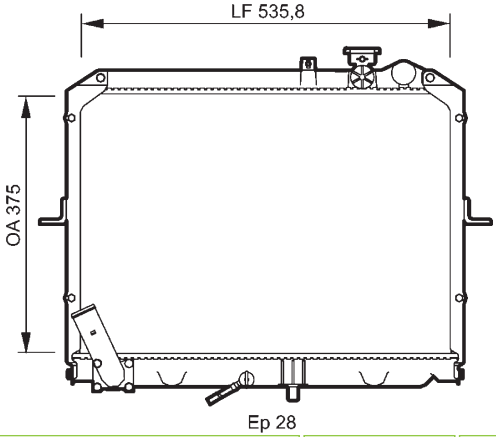


| | | |
|---|---|---|
| KIA 0K72A15200 | 375x535,8x28 | 35mm L |
| - | | 35mm L |

## 734981 RM1606 ALM

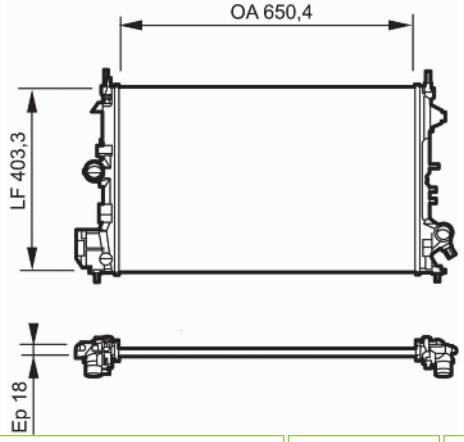


| | | |
|---|---|---|
| FIAT 51773281<br>OPEL 1300284 | 650x403x18 | 34mm L |
| - | | 34mm L |

## 734982 RM1607 ALM

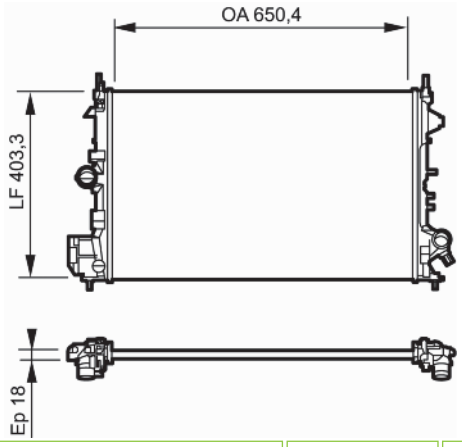


| | | |
|---|---|---|
| OPEL 1300283 | 650x403x18 | 34mm L |
| | | 34mm L |

## 735033 ALB

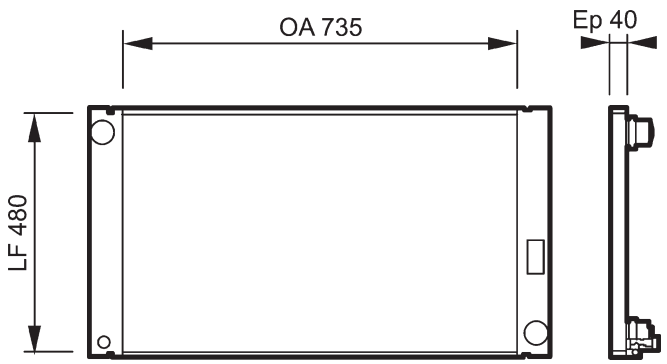


| | | |
|---|---|---|
| AUDI 4E0121251C | 725x480x40 | 38mm QC |
| | | 38mm QC |

## 734990 ALB

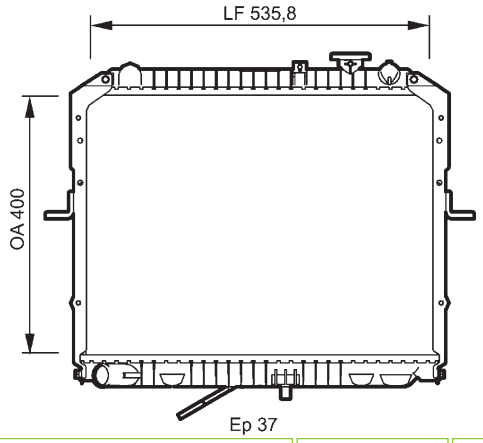


| | | |
|---|---|---|
| KIA 0K62Z15200C | 400x535,8x37 | 35mm L |
| | | 35mm L |

## 735034 ALB

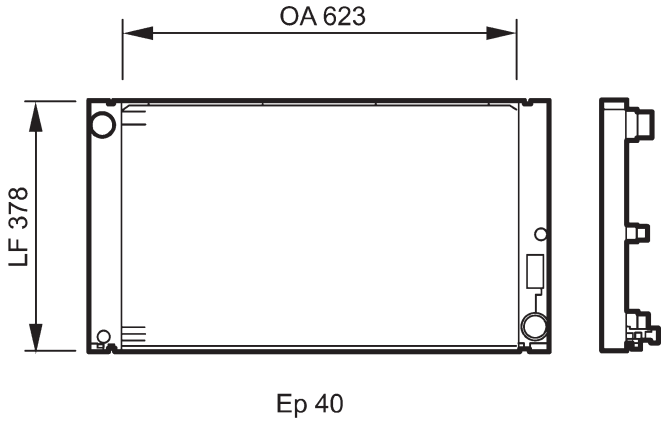


| | | |
|---|---|---|
| BMW 17117792832 | 623x378x40 | QC |
| | | QC |

## 735021 ALB

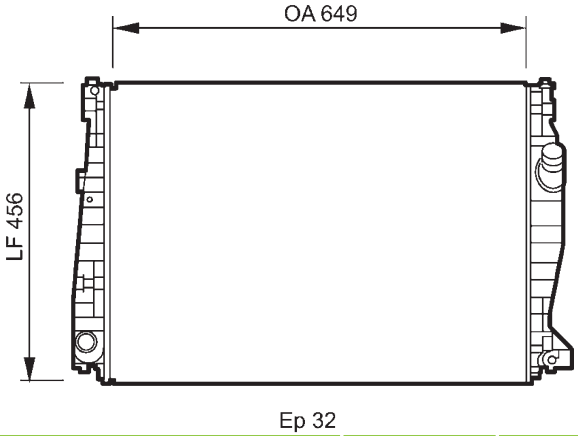


| | | |
|---|---|---|
| ALFA ROMEO 71740292 | 649x456x32 | 35mm QC |
| | | 35mm L |

## 735036 ALB

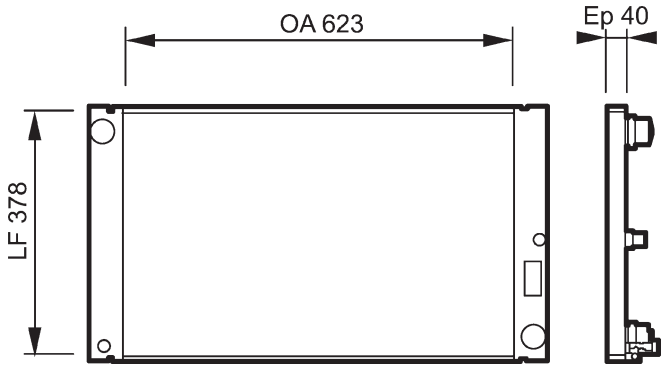


| | | |
|---|---|---|
| BMW 17117794836 | 623x378x40 | QC |
| | | QC |

## 735040 ALB

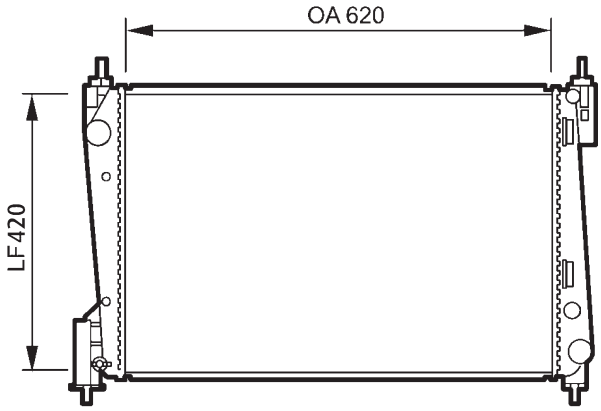


Ep 30

| | | | |
|---|---|---|---|
| FIAT 55700448<br>OPEL 1300415<br>VAUXHALL 55703926 | 620x395x27 | 38mm QC | |
| | | 38mm QC | |

## 735041 RA2041 ALB

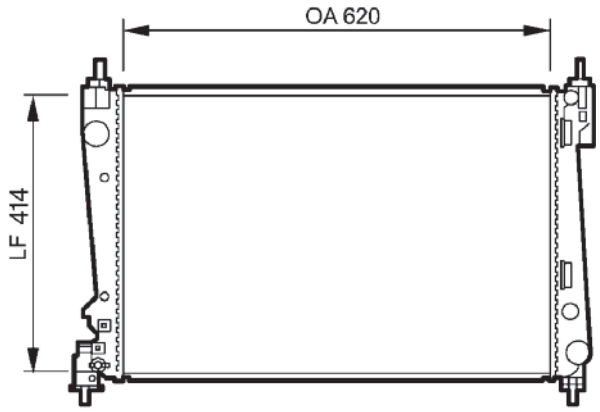


Ep 27

| | | | |
|---|---|---|---|
| FIAT 55703927<br>OPEL 1300287<br>VAUXHALL 55703927 | 620x414,5x27 | 38mm QC | |
| | | 38mm QC | |

## 735042 RM2022 ALM

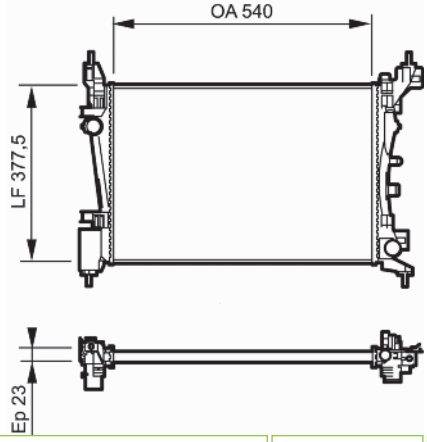


| | | | |
|---|---|---|---|
| FIAT 55700447 | 540x377,5x23 | 35mm L | |
| | | 35mm L | |

## 735043 RAB055

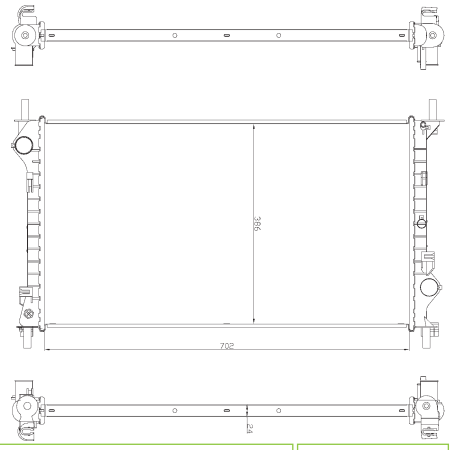

| | | | |
|---|---|---|---|
| FORD 4367089 | 702x386x24 | 33mm L | |
| | | 33mm L | |

## 735045 ALB

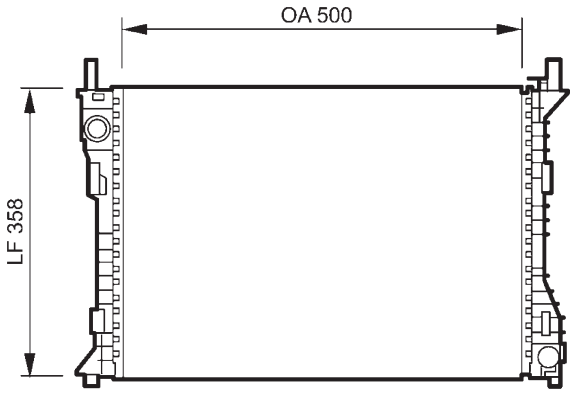


Ep 19

| | | | |
|---|---|---|---|
| FORD 1363013 | 500x358x19 | | |
| | | | |

## 735046 ALB

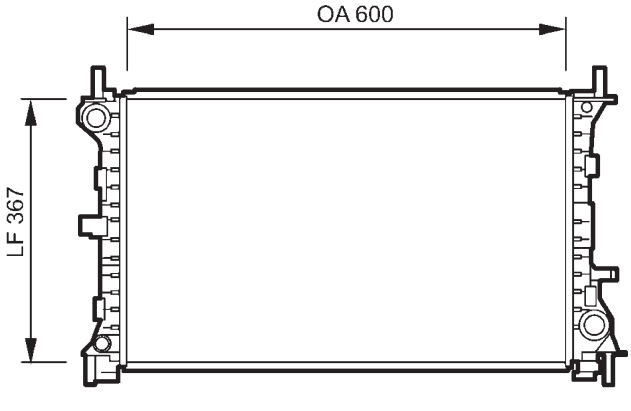


Ep 26

| | | | |
|---|---|---|---|
| FORD 1093458 | 600x367x27 | 33mm L | |
| | | 33mm L | |

## 735048 ALB

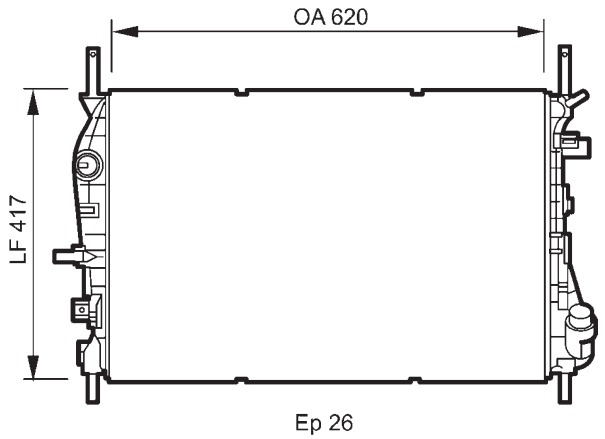


| | | |
|---|---|---|
| FORD 1350152 | 620x417x26 | |
| | - | |

## 735051 ALB

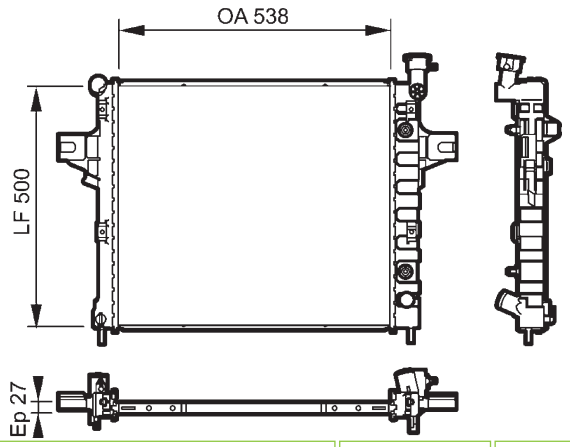


| | | |
|---|---|---|
| JEEP 52079883AB | 500x538x27 | 38mm L |
| | + | 38mm L |

## 735049 ALB

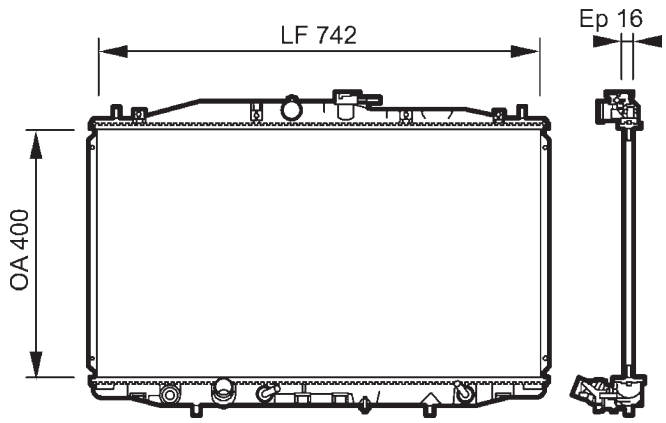


| | | |
|---|---|---|
| HONDA 19010RBBE51 | 400x718x16 | 32mm L |
| | + | 32mm L |

## 735053 ALB

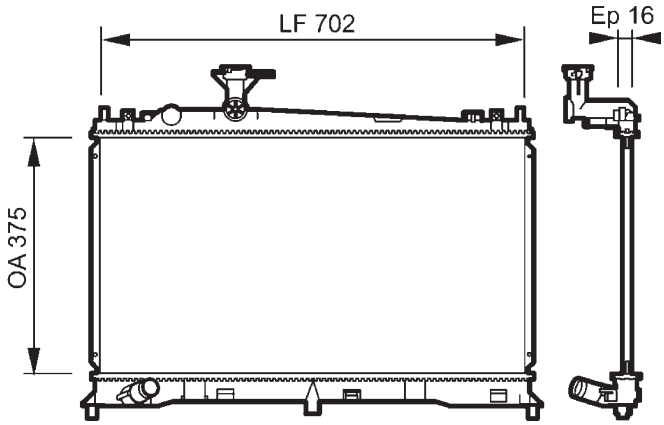


| | | |
|---|---|---|
| MAZDA LF1715200 | 375x702x16 | 32mm L |
| | - | 32mm L |

## 735050 ALB

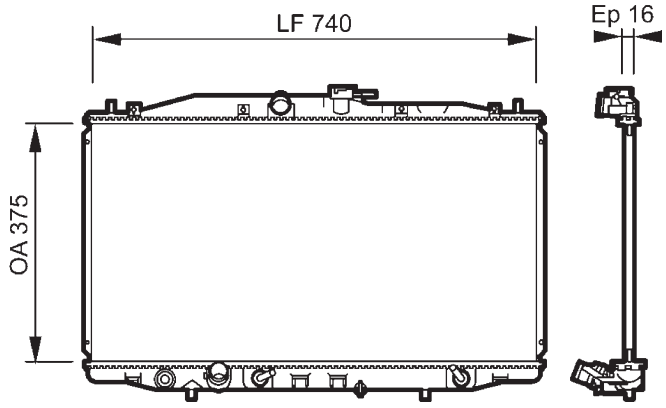


| | | |
|---|---|---|
| HONDA 19010RBA901 | 375x712x16 | 32mm L |
| | + | 32mm L |

## 735054

Picture not available
Image non disponible
Imagen no disponible
Immagine non disponibile
Nicht verfügbares Bild
Brak zdjęcia
Картина недоступна

| | | |
|---|---|---|
| MCC 0010033V003000000 | 394x599x32 | |
| | - | |

## 735055 ALB

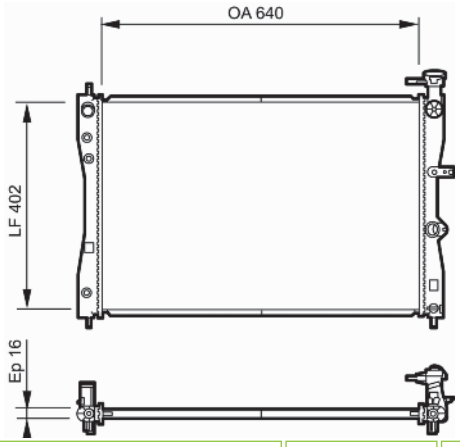


| | | |
|---|---|---|
| MCC 4545001503<br>MITSUHISHI MN130393 | 640x402x16 | 28mm L |
| - | | 28mm L |

## 735056 ALB

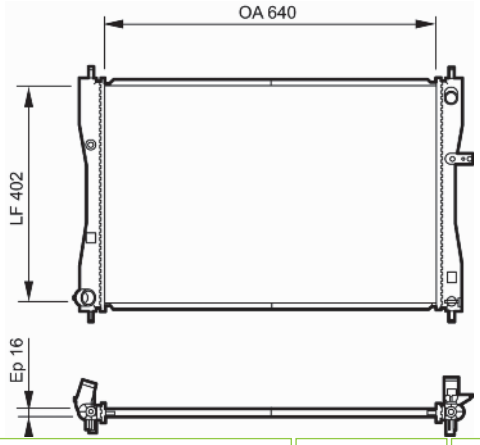


| | | |
|---|---|---|
| MCC 4545001103<br>MITSUHISHI MN130395 | 640x402x16 | 28mm L |
| - | | 28mm L |

## 735057 ALB

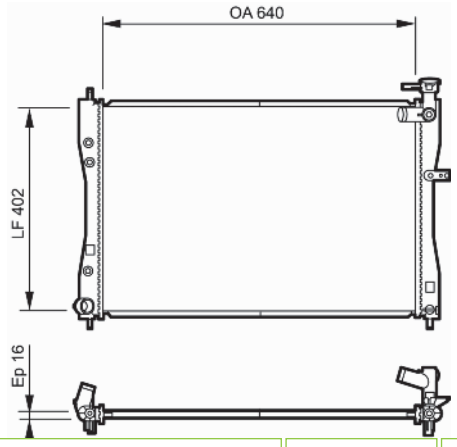


| | | |
|---|---|---|
| MITSUBISHI MN135879 | 640x402x16 | 28mm L |
| - | | 28mm L |

## 735058 ALB

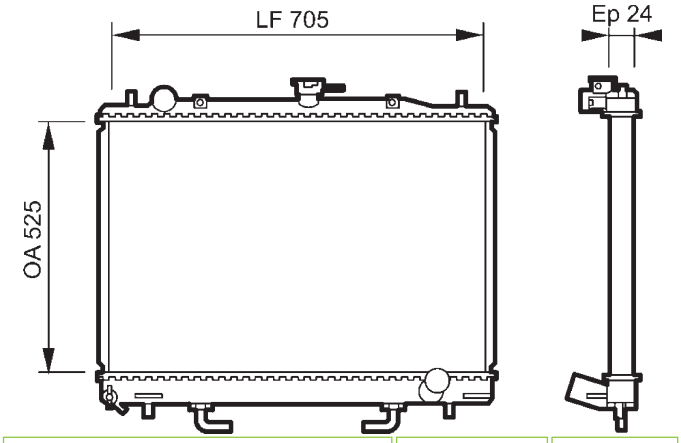


| | | |
|---|---|---|
| MITSUBISHI MR968289 | 525x705x24 | 35mm L |
| + | | 35mm L |

## 735059 ALB

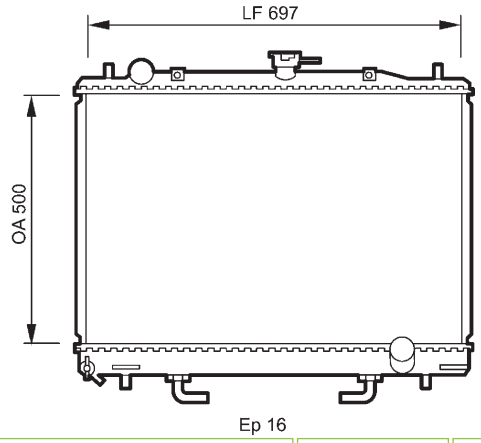


| | | |
|---|---|---|
| MITSUBISHI MB890951 | 500x697x16 | 35mm L |
| + | | 35mm L |

## 735060 CBS

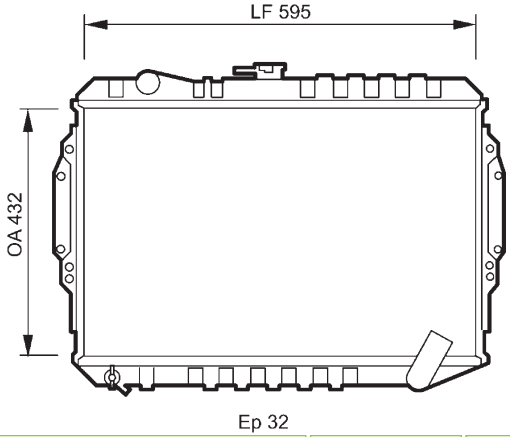


| | | |
|---|---|---|
| MITSUBISHI MR188432 | 432x595x32 | 35mm L |
| - | | 35mm L |

## 735061 ALB

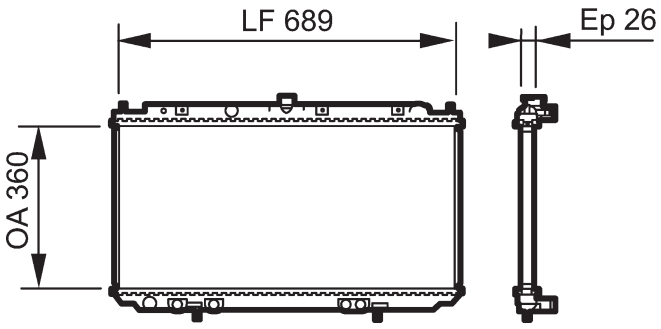


| | | |
|---|---|---|
| NISSAN 21410BV010 | 360x689x26 | 28mm L |
| | - | 28mm L |

## 735062 ALB

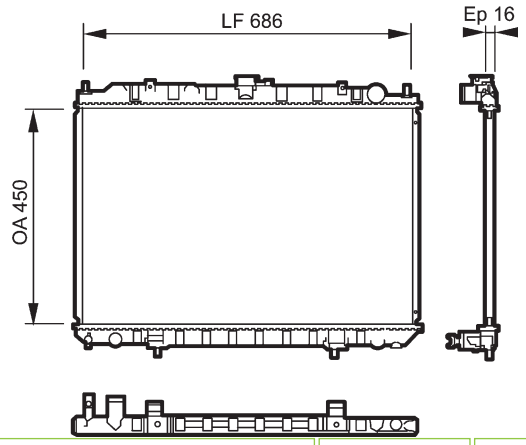


| | | |
|---|---|---|
| NISSAN 214108H801 | 450x686x16 | 35mm L |
| | - | 35mm L |

## 735063 ALB

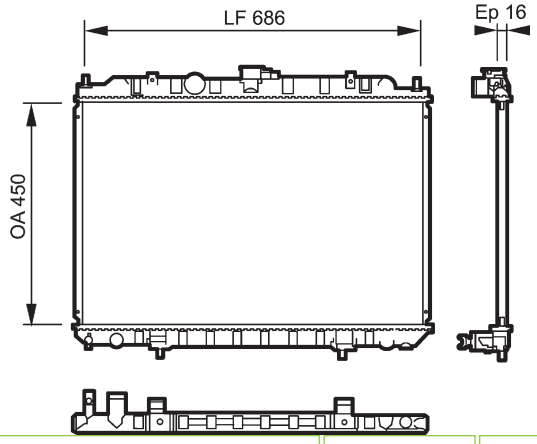


| | | |
|---|---|---|
| NISSAN 214108H900 | 450x686x16 | 35mm L |
| | - | 35mm L |

## 735064 ALB

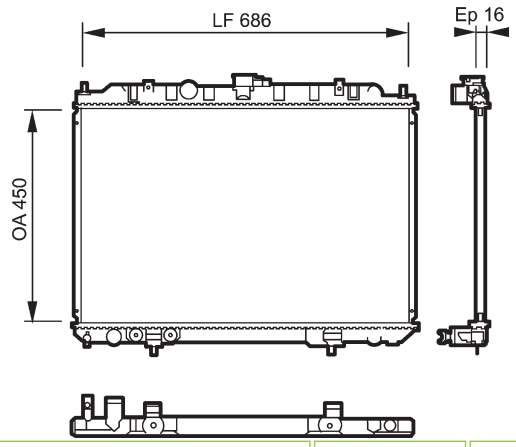


| | | |
|---|---|---|
| NISSAN 214608H900 | 450x686x16 | 35mm L |
| | + | 35mm L |

## 735065 ALB

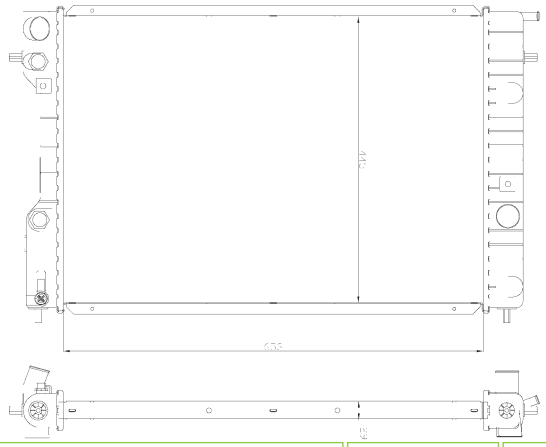

| | | |
|---|---|---|
| OPEL 1300165<br>VAUXHALL 52464745 | 653x445x29 | 34mm L |
| | - | 34mm L |

## 735068 ALB

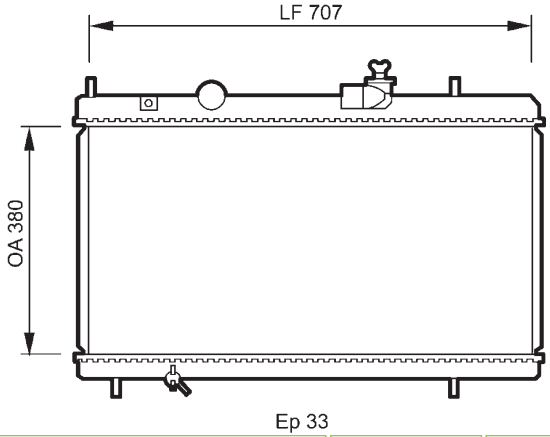


| | | |
|---|---|---|
| CITROEN 1330K3<br>PEUGEOT 1330K3 | 380x707x33 | |
| | - | |

## 735069 ALB

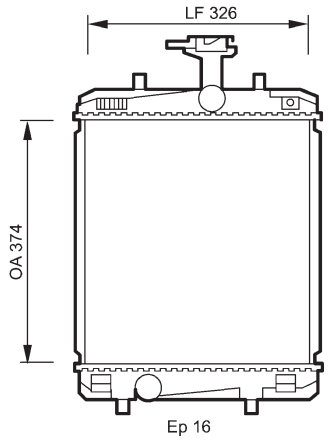


| | | | |
|---|---|---|---|
| CITROEN 1330P5<br>PEUGEOT 1330P5<br>TOYOTA 164000Q020 | 374x326x16 | 28mm L | |
| | | 28mm L | |

## 735070 ALB

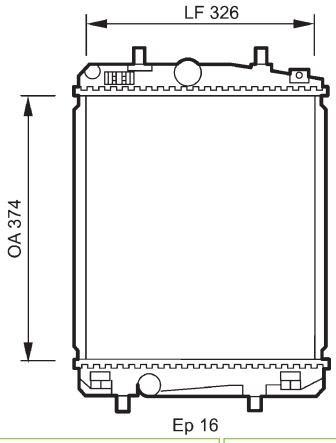


| | | | |
|---|---|---|---|
| CITROEN 1330P3<br>PEUGEOT 1330P3<br>TOYOTA 16400YV010 | 374x326x16 | 28mm L | |
| | | 28mm L | |

## 735072 ALB

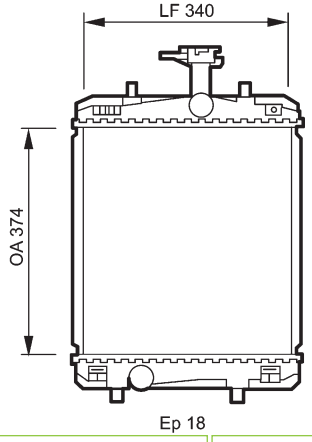


| | | | |
|---|---|---|---|
| CITROEN 1330P4<br>PEUGEOT 1330P4<br>TOYOTA 164000Q010 | 374x340x18 | 28mm L | |
| | | 28mm L | |

## 735073 CBS

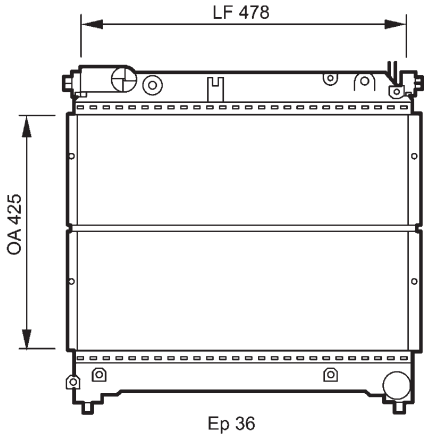


| | | | |
|---|---|---|---|
| SUZUKI 1770084CA0 | 425x478x36 | 36mm L | |
| | | 36mm L | |

## 735074 CBS

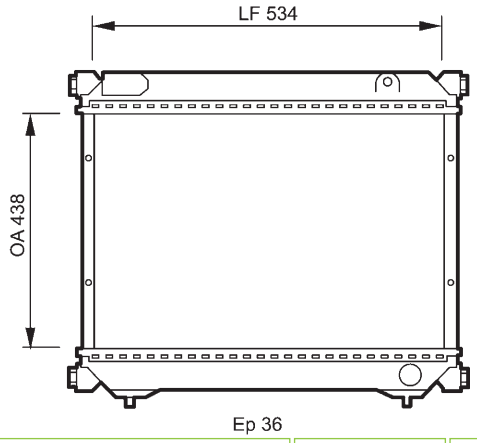


| | | | |
|---|---|---|---|
| SUZUKI 1770086CC2 | 438x534x36 | 36mm L | |
| | | 36mm L | |

## 735075 ALB

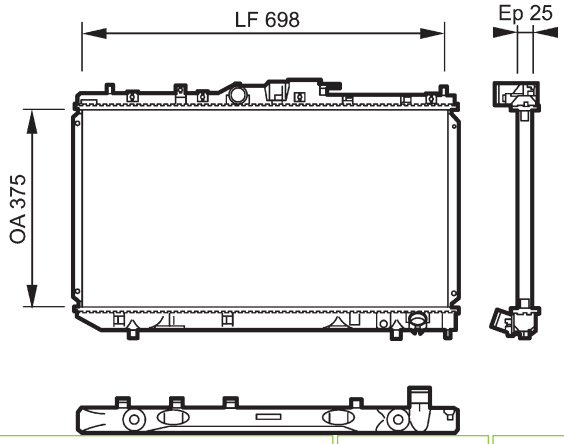


| | | | |
|---|---|---|---|
| TOYOTA 164000G010 | 375x698x25 | 38mm L | |
| | | 38mm L | |

## 735076 ALB

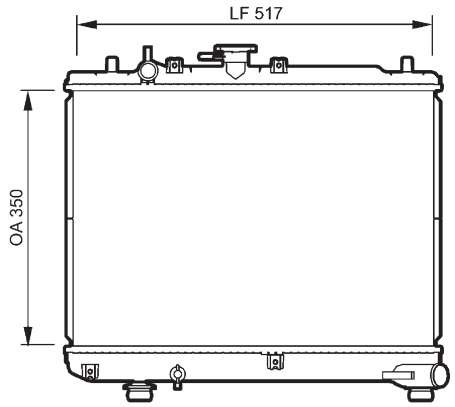


Ep 16

| | | |
|---|---|---|
| KIA KK37015200A | 350x526x16 | |
| | - | |

## 735079 ALB

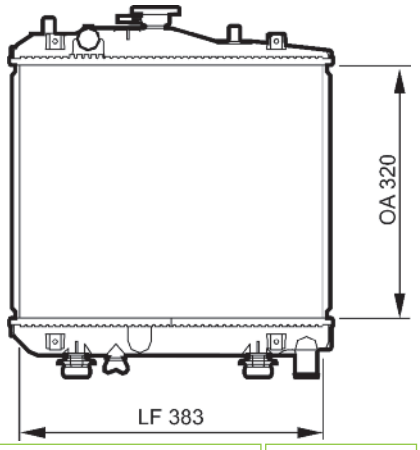


| | | |
|---|---|---|
| KIA KK15015200A | 320x378 | |
| | - | |

## 735077 ALB

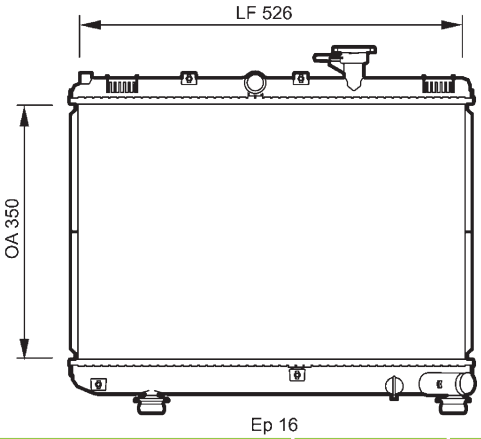


Ep 16

| | | |
|---|---|---|
| KIA 0K30A15200E | 350x526x16 | 31mm L |
| | - | 31mm L |

## 735080 ALB

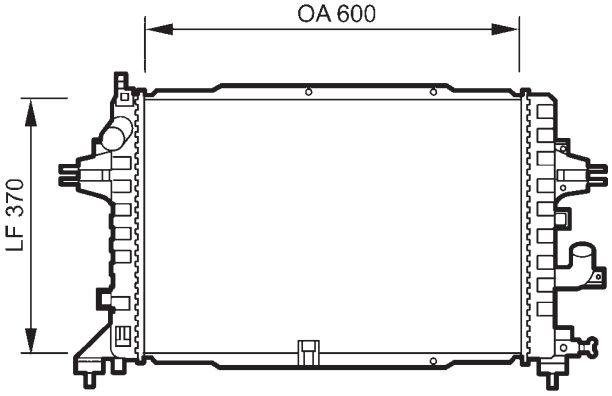


Ep 28

| | | |
|---|---|---|
| OPEL 1300271<br>VAUXHALL 13152320 | 600x370x28 | 34mm L |
| | - | 34mm L |

## 735078 ALB

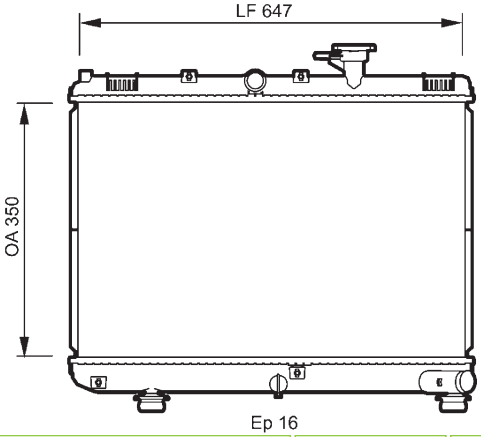


Ep 16

| | | |
|---|---|---|
| KIA 0K31A15200A | 350x347x16 | |
| | - | |

## 735081 ALB

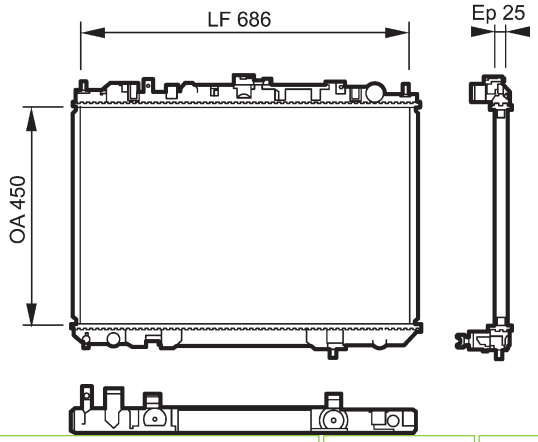


| | | |
|---|---|---|
| NISSAN 214108H800 | 450x686x25 | 35mm L |
| | - | 35mm L |

## 735083 RA1356 ALB

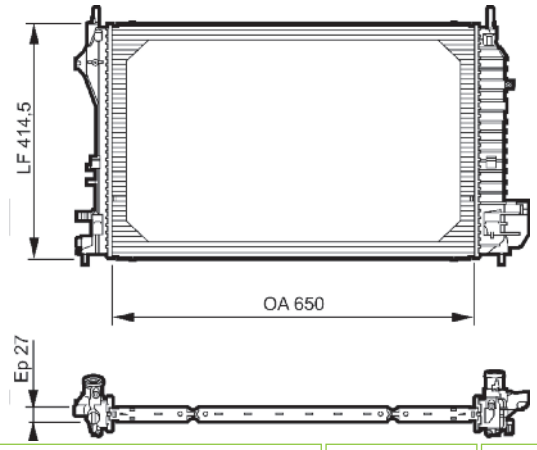


| | | | |
|---|---|---|---|
| OPEL 1300277<br>SAAB 12805057<br>VAUXHALL 12805057 | 650x414,5x27 | L | |
| | + | L | |

## 735086 RA1369 ALB

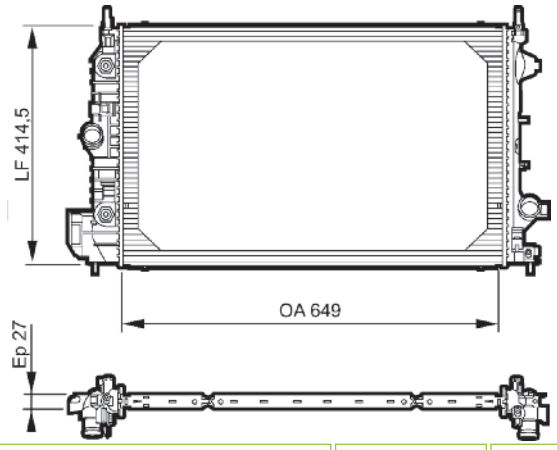


| | | | |
|---|---|---|---|
| SAAB 13200486 | 649x414,5 | 34mm L | |
| | + | 34mm L | |

## 735084 RA1366 ALB

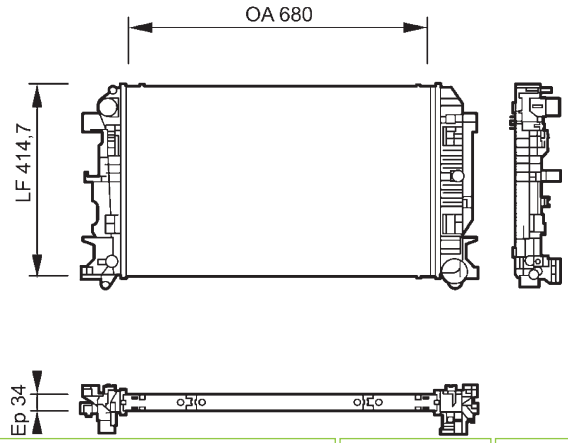


| | | | |
|---|---|---|---|
| VOLKSWAGEN 2E0121253A | 680x414,7x34 | | |
| | - | QC | |

## 735088 RA1393 ALB

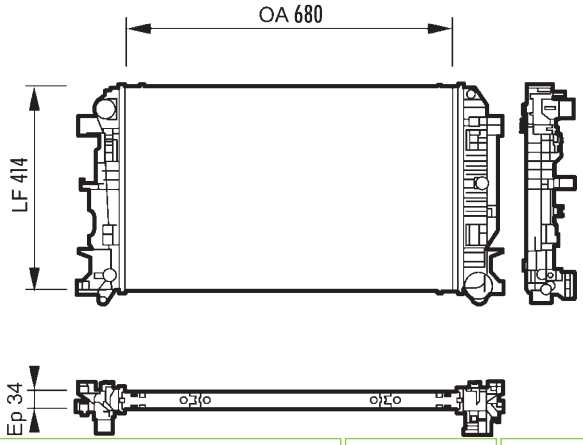


| | | | |
|---|---|---|---|
| MERCEDES 9065000102 | 680x414,75x34 | | |
| | - | QC | |

## 735085 RA1368 ALB

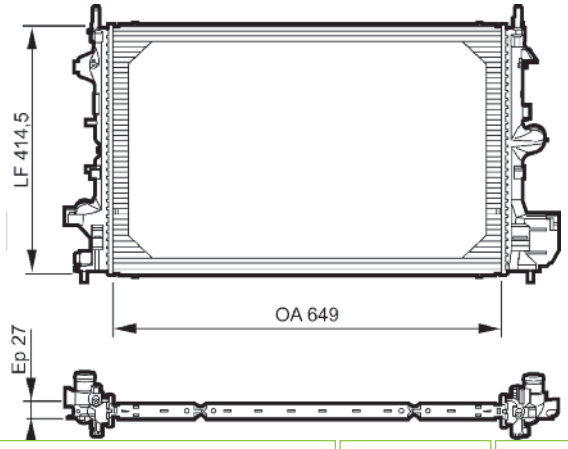


| | | | |
|---|---|---|---|
| FIAT 51775637<br>VAUXHALL 13196477 | 649x414,5x27 | 34mm L | |
| | - | 34mm L | |

## 735089 RA1394 ALB

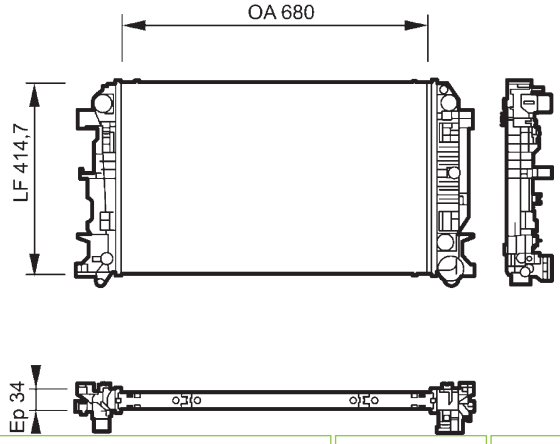


| | | | |
|---|---|---|---|
| MERCEDES 9065000302 | 680x414,7x34 | | |
| | + | QC | |

## 735090 RA1560 ALB

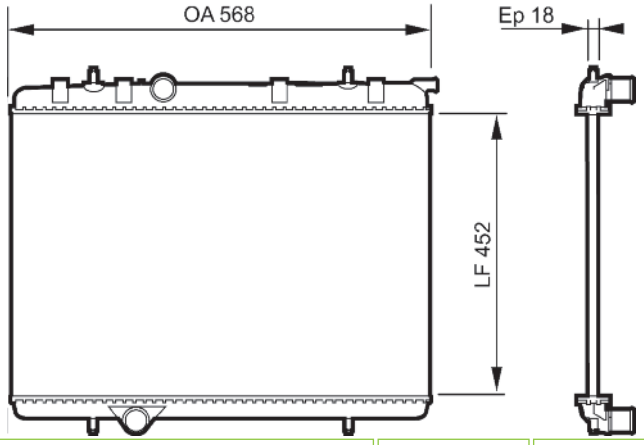


| | | |
|---|---|---|
| CITROEN 1330V5<br>PEUGEOT 1330V5 | 378x562,5x18 | 32mm L |
| - | | 32mm L |

## 735097 RM2023 ALM

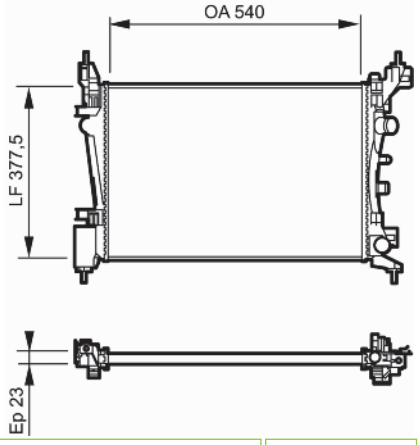


| | | |
|---|---|---|
| OPEL 1300279<br>VAUXHALL 55701408 | 540x377,5x23 | L |
| - | | L |

## 735091 RA1561 ALB

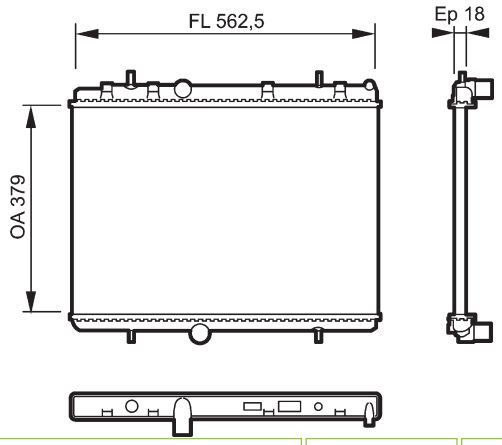


| | | |
|---|---|---|
| PEUGEOT 1330S8 | 378,6x562,6x18 | 32mm L |
| - | | 32mm L |

## 735112 RA1533

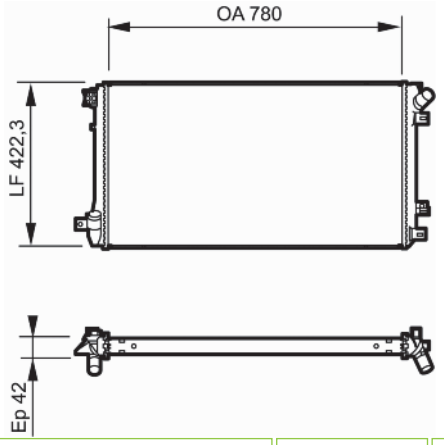


| | | |
|---|---|---|
| RENAULT 7701066109 | 780x422,3x42 | 32mm L |
| + | | 32mm L |

## 735093 ALB

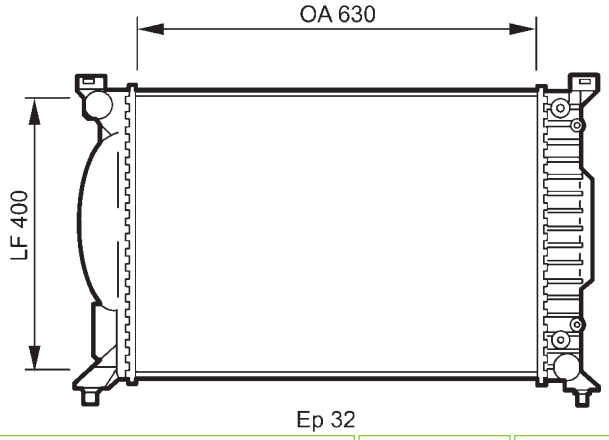


| | | |
|---|---|---|
| AUDI 8E0121251P | 630x400x32 | 32mm QC |
| + | | 32mm QC |

## 735114 RA1590 ALB

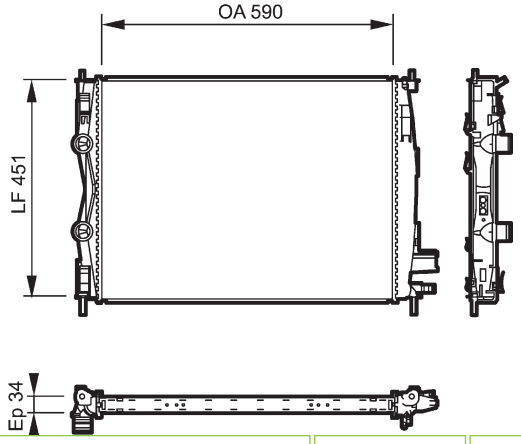


| | | |
|---|---|---|
| NISSAN 21400JD50A | 590x451,5x34 | 34mm L |
| - | | 34mm L |

## 735115 RA2073 ALB

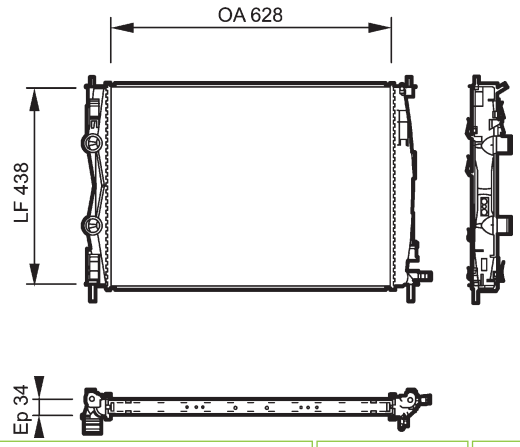


| | | | |
|---|---|---|---|
| NISSAN | 21400JD70A | 628x438,2x34 | 34mm L |
| | | - | 34mm L |

## 735116 RA1594 ALB

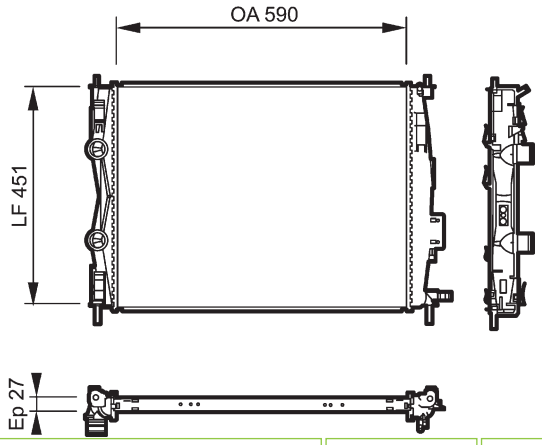


| | | | |
|---|---|---|---|
| NISSAN | 21400JD900 | 590x450,7x27 | 34mm L |
| | | - | 34mm L |

## 735118 RM1611 ALM

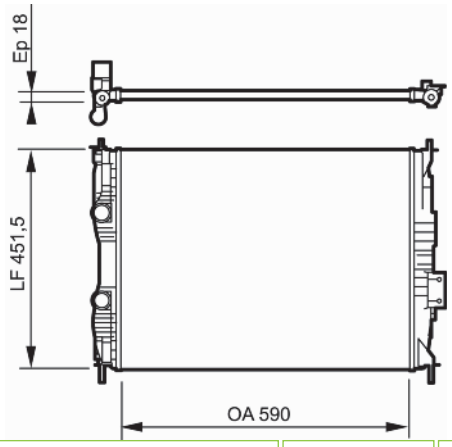


| | | | |
|---|---|---|---|
| NISSAN | 21400JD200 | 590x451,5x18 | 34mm L |
| | | - | 34mm L |

## 735119 RM1612 ALM

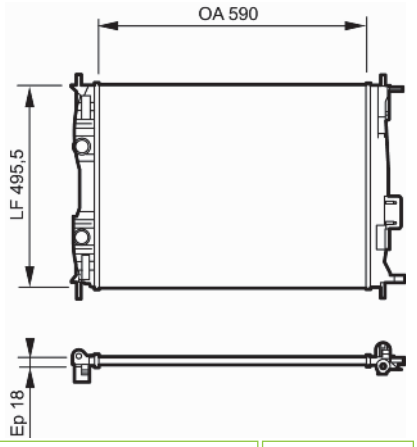


| | | | |
|---|---|---|---|
| NISSAN | 21400JD000 | 590x451,5x18 | 34mm L |
| | | - | 34mm L |

## 735120 RM1836 ALM

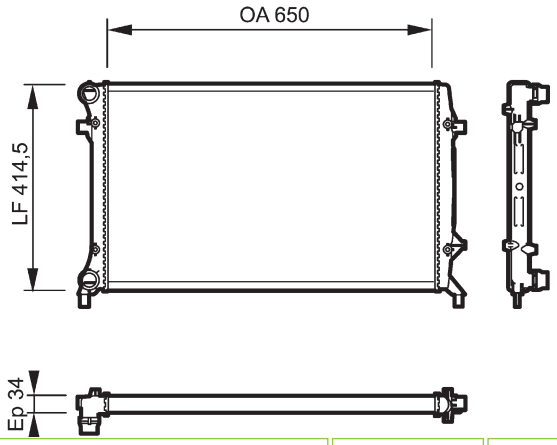


| | | | |
|---|---|---|---|
| AUDI | 1K0121251AR | 650x414,5x34 | 32mm QC |
| SEAT | 1K0121251AR | | |
| SKODA | 1K0121251BL | | |
| VOLKSWAGEN | 1K0121251BL | | |
| | | - | 32mm QC |

## 735121 RM1835 ALM

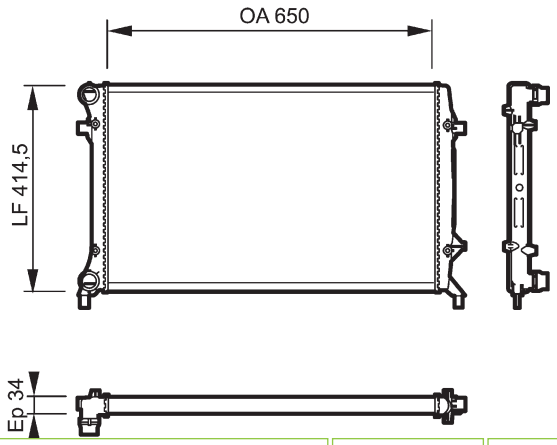


| | | | |
|---|---|---|---|
| VOLKSWAGEN | 1K0121253AC | 650x414,5x34 | QC |
| | | - | QC |

## 735125 RM1583 ALM

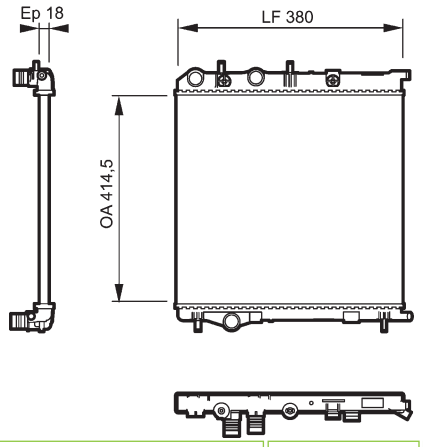


| | | |
|---|---|---|
| PEUGEOT 1330S4 | 380x414,5x18 | L |
| | | L |

## 735131 RA1355 ALB

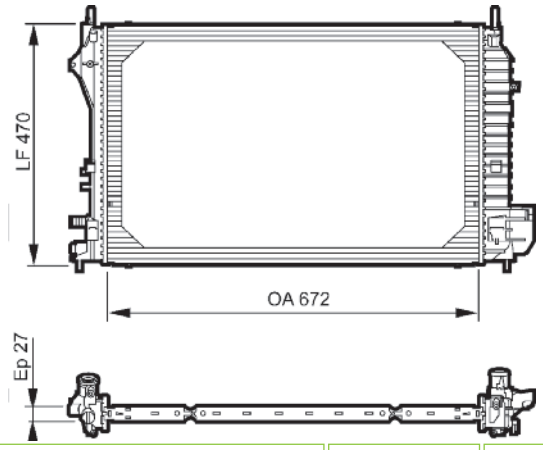


| | | |
|---|---|---|
| SAAB 12805055 | 470x672x27 | |
| | | |

## 735129 RA1607 ALB

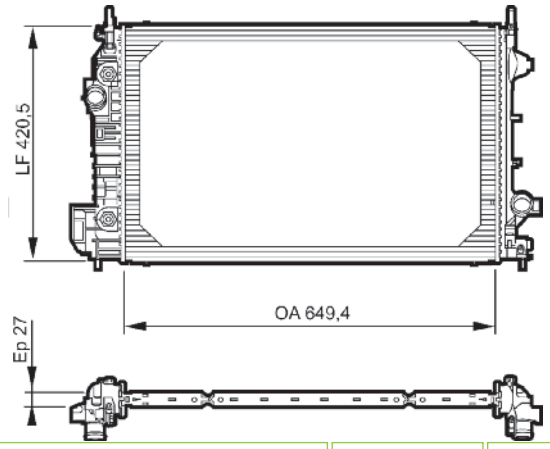


| | | |
|---|---|---|
| SAAB 12775540 | 420,5x649,4x27 | |
| | | |

## 735133 RA1675 ALB

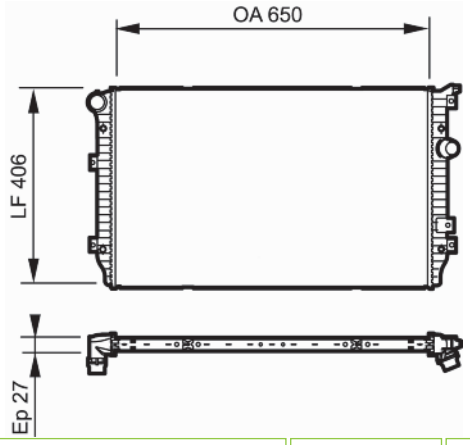


| | | |
|---|---|---|
| VOLKSWAGEN 5N0121253H | 650x406x27 | 32.5mm QC |
| | | 32.5mm QC |

## 735130 RA1606 ALB

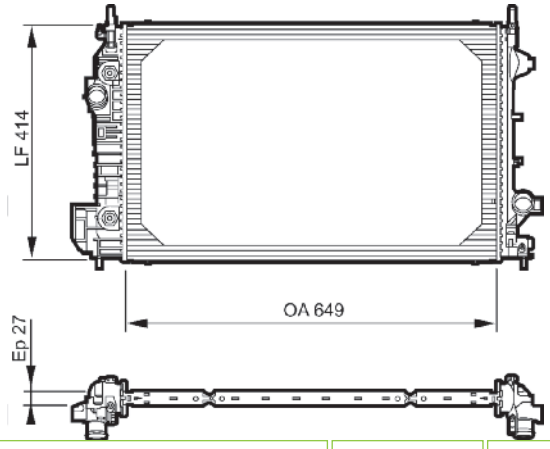


| | | |
|---|---|---|
| SAAB 12775541 | 414x649x27 | |
| | | |

## 735134 RM1588 ALM

Picture not available
Image non disponible
Imagen no disponible
Immagine non disponibile
Nicht verfügbares Bild
Brak zdjęcia
Картина недоступна

| | | |
|---|---|---|
| RENAULT 8200448552 | 404x493x18 | 32mm L |
| | | 32mm L |

## 735135 RM1586 ALM

Picture not available
Image non disponible
Imagen no disponible
Immagine non disponibile
Nicht verfügbares Bild
Brak zdjęcia
Картина недоступна

| | | |
|---|---|---|
| RENAULT 8200448553 | 403x494x18 | 32mm L |
| – | | 32mm L |

## 735144 RA1680 ALB

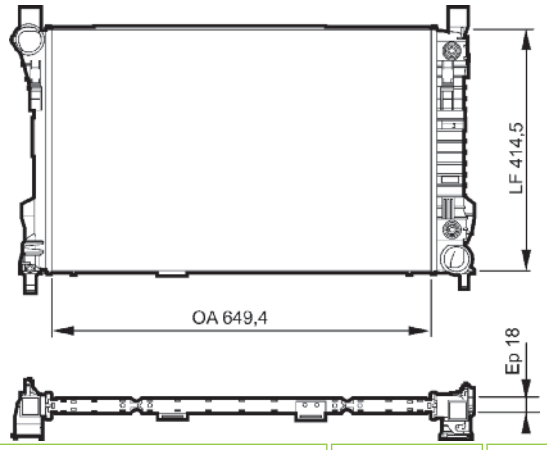


| | | |
|---|---|---|
| MERCEDES 2035004503 | 414,5x649,4x18 | |
| – | | |

## 735138 RA1429AT ALB

Picture not available
Image non disponible
Imagen no disponible
Immagine non disponibile
Nicht verfügbares Bild
Brak zdjęcia
Картина недоступна

| | | |
|---|---|---|
| MERCEDES 2045000203 | 451,5x640x18 | |
| – | | |

## 735156 RA1530 ALB

Picture not available
Image non disponible
Imagen no disponible
Immagine non disponibile
Nicht verfügbares Bild
Brak zdjęcia
Картина недоступна

| | | |
|---|---|---|
| RENAULT 8200443896 | 492x406,3x27 | 32mm L |
| – | | 32mm L |

## 735139 RA1430MT ALB

Picture not available
Image non disponible
Imagen no disponible
Immagine non disponibile
Nicht verfügbares Bild
Brak zdjęcia
Картина недоступна

| | | |
|---|---|---|
| MERCEDES 2045000303 | 451,5x640x18 | |
| – | | |

## 735157 ALB

—

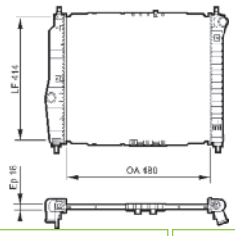

| | | |
|---|---|---|
| DAEWOO 96536523 | 480x416x16 | 34mm L |
| – | | 34mm L |

## 735158 ALB

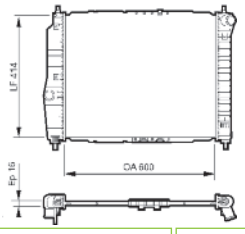


| | | |
|---|---|---|
| DAEWOO 96536669 | 600x414x16 | 34mm L |
| | + | 34mm L |

## 735166 ALB

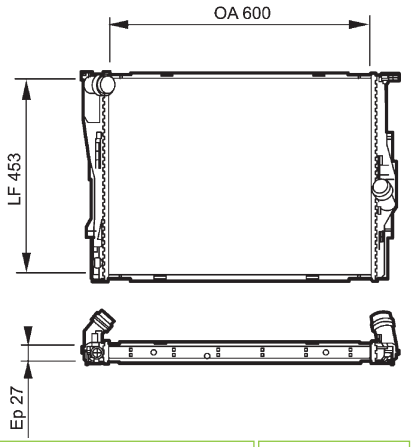


| | | |
|---|---|---|
| BMW 17117521046 | 600x453x27 | 38mm QC |
| | - | 38mm QC |

## 735159 ALB

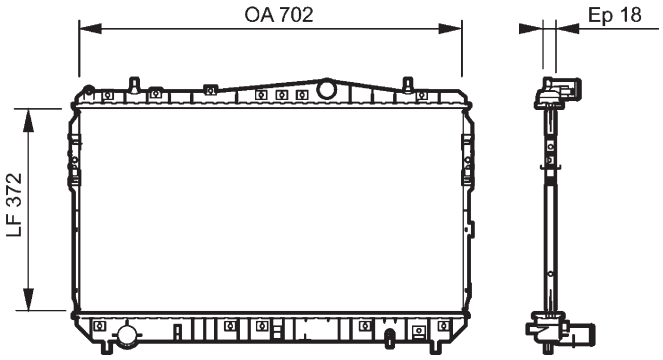


| | | |
|---|---|---|
| DAEWOO 96553378 | 702x377x16 | 34mm L |
| | - | 34mm L |

## 735167 ALB

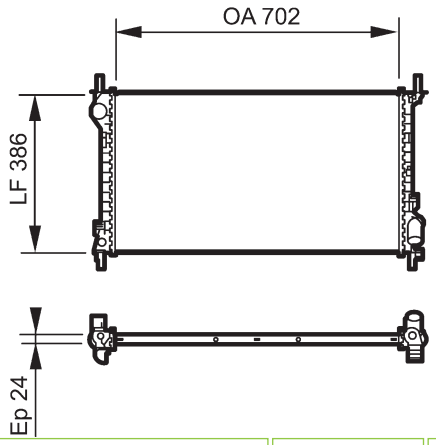


| | | |
|---|---|---|
| FORD 1365996 | 702x386x24 | 33mm L |
| | - | 33mm L |

## 735165 ALB

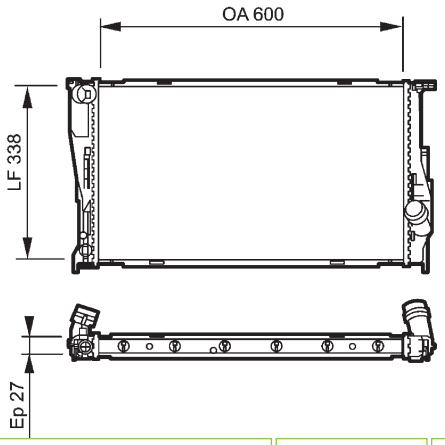


| | | |
|---|---|---|
| BMW 17117788903 | 600x338x27 | 38mm QC |
| | - | 38mm QC |

## 735171 RM2016 ALM

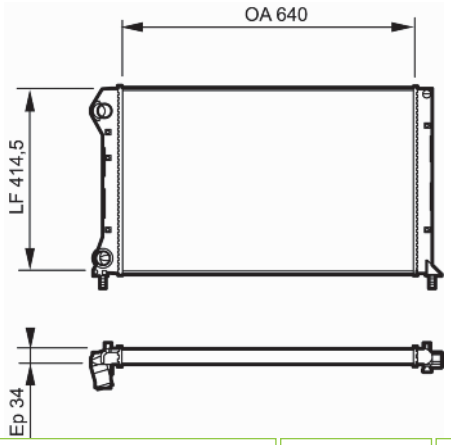


| | | |
|---|---|---|
| FIAT 46803039 | 640x414,5x34 | 35mm L |
| | - | 35mm L |

## 735172 RM2017 ALM

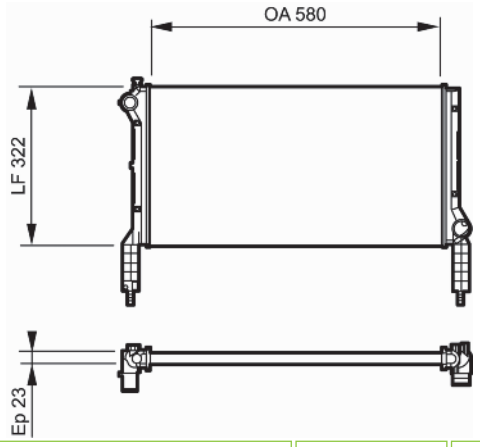


| | | |
|---|---|---|
| FIAT 46803031 | 580x322x23 | 35mm L |
| | | 35mm QC |

## 735180 RA1794

Picture not available
Image non disponible
Imagen no disponible
Immagine non disponibile
Nicht verfügbares Bild
Brak zdjęcia
Картина недоступна

| | | |
|---|---|---|
| RENAULT 214100057R | | |
| | | |

## 735175 RM1824

Picture not available
Image non disponible
Imagen no disponible
Immagine non disponibile
Nicht verfügbares Bild
Brak zdjęcia
Картина недоступна

| | | |
|---|---|---|
| FIAT 51779915 | | |
| | | |

## 735181 RA2023 ALB

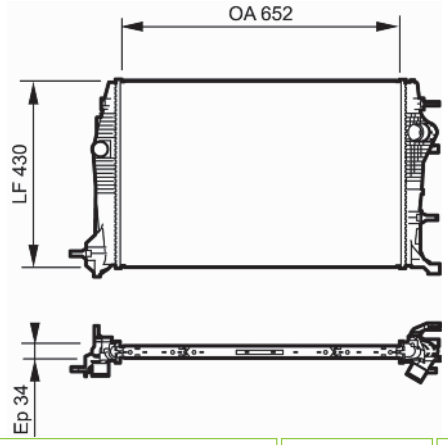


| | | |
|---|---|---|
| RENAULT 214100017R | 652x430x34 | |
| | | |

## 735179 RA1677

Picture not available
Image non disponible
Imagen no disponible
Immagine non disponibile
Nicht verfügbares Bild
Brak zdjęcia
Картина недоступна

| | | |
|---|---|---|
| SKODA 1K0121251BN<br>VOLKSWAGEN 1K0121251BN | | |
| | | |

## 735182 RA1563 ALB

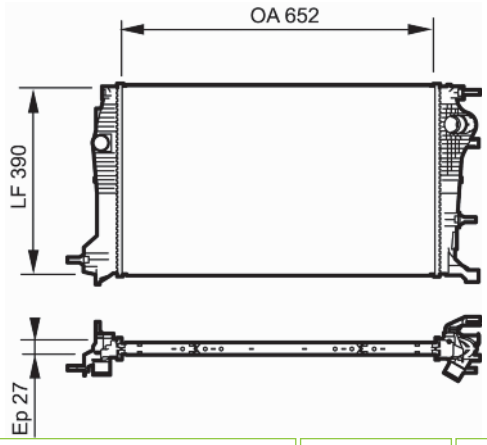


| | | |
|---|---|---|
| RENAULT 214100016R | 652x390x27 | 35mm L |
| | | 35mm L |

## 735184 RM1822 ALM

Picture not available
Image non disponible
Imagen no disponible
Immagine non disponibile
Nicht verfügbares Bild
Brak zdjęcia
Картина недоступна

| | | | |
|---|---|---|---|
| RENAULT | 214100014R | 652x488,5x18 | 28mm L |
| | | - | 28mm L |

## 735194 ALB

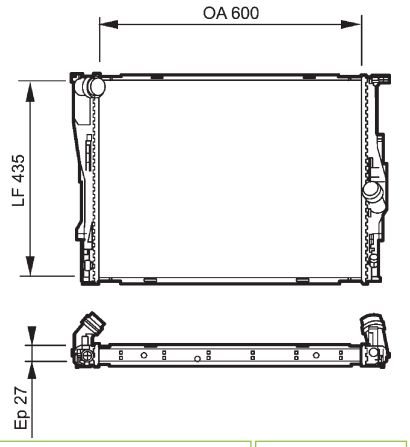


| | | | |
|---|---|---|---|
| BMW | 17117562079 | 600x435x27 | 38mm QC |
| | | - | 38mm QC |

## 735186 RM1837 ALM

Picture not available
Image non disponible
Imagen no disponible
Immagine non disponibile
Nicht verfügbares Bild
Brak zdjęcia
Картина недоступна

| | | | |
|---|---|---|---|
| VOLKSWAGEN | 1K0121251CN | 650x414,5x34 | QC |
| | | - | QC |

## 735195 ALB

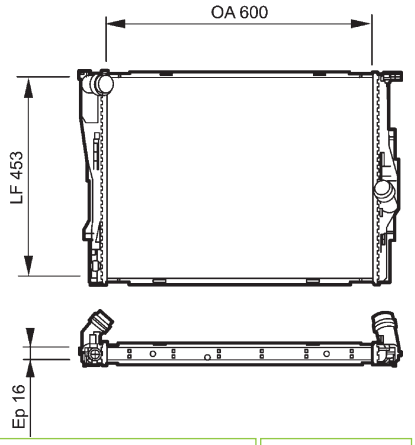


| | | | |
|---|---|---|---|
| BMW | 17117553111 | 600x453x16 | 38mm QC |
| | | - | 38mm QC |

## 735188 RA2010 ALB

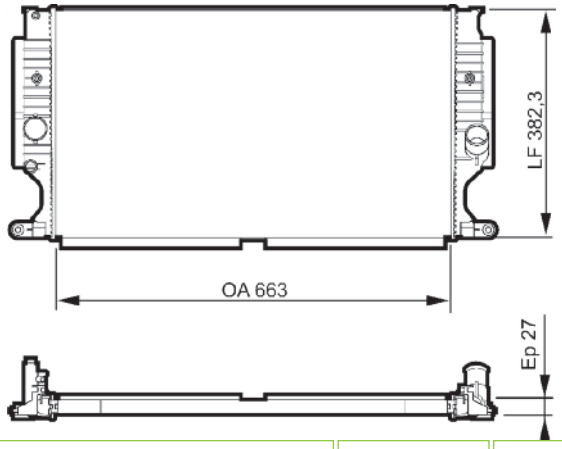


| | | | |
|---|---|---|---|
| TOYOTA | 164000R061 | 382x663x27 | |
| | | - | |

## 735196 ALB

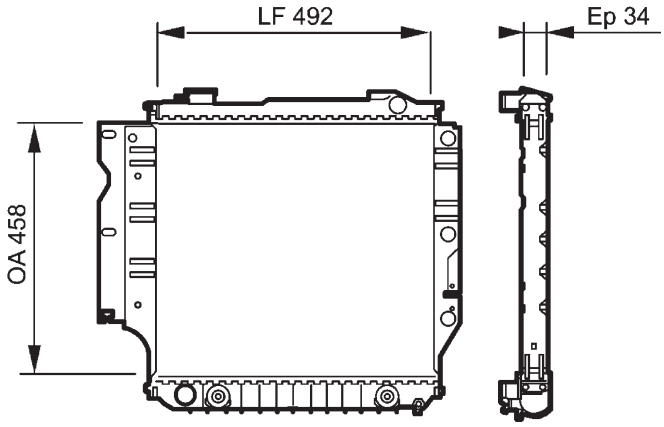


| | | | |
|---|---|---|---|
| JEEP | 55037654AB | 458x492x34 | 32mm L |
| | | + | 38mm L |

## 735198 ALB

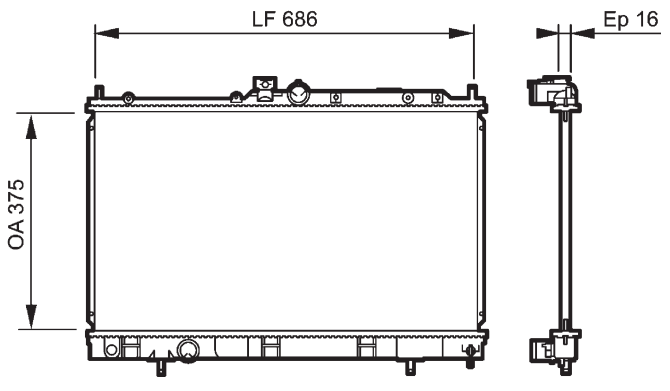


| | | |
|---|---|---|
| MITSUBISHI MR968857 | 375x686x16 | 35mm L |
| | - | 35mm L |

## 735202 ALB

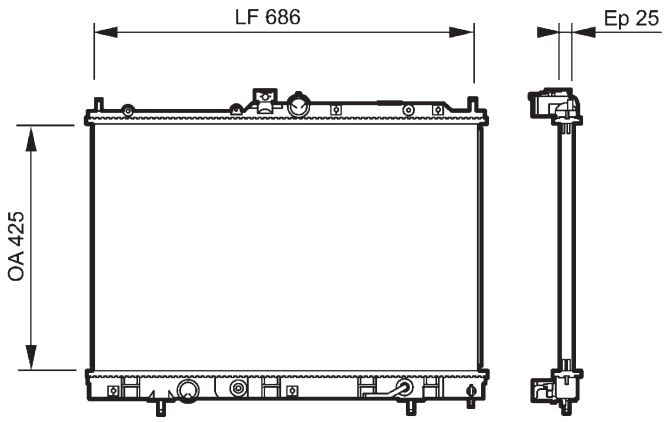


| | | |
|---|---|---|
| MITSUBISHI MN156319 | 425x696x25 | 35mm L |
| | + | 35mm L |

## 735200 ALB

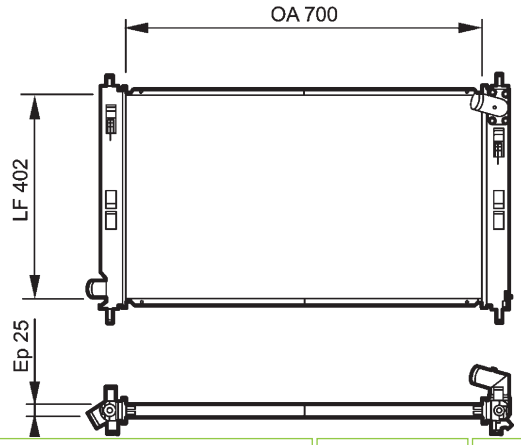


| | | |
|---|---|---|
| CITROEN 1330V1<br>MITSUBISHI 1350A050<br>PEUGEOT 1330V1 | 700x402x25 | 35mm L |
| | - | 35mm L |

## 735203 ALB

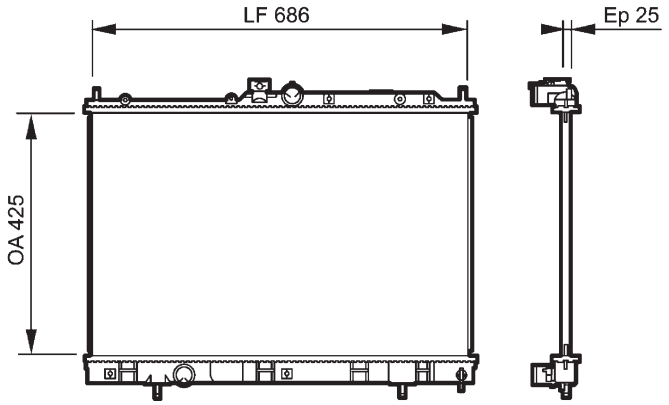


| | | |
|---|---|---|
| MITSUBISHI MN156535 | 425x686x25 | 35mm L |
| | - | 35mm L |

## 735201 ALB

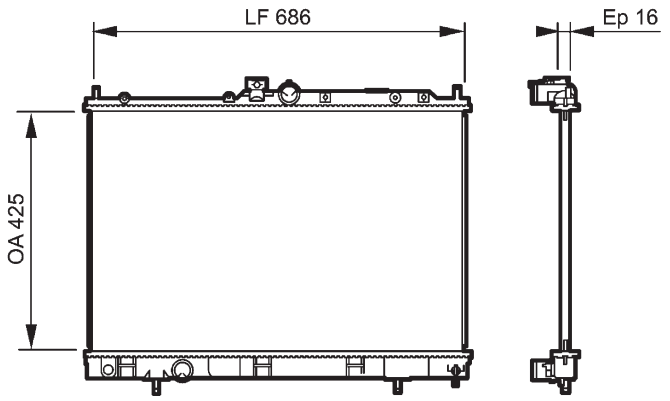


| | | |
|---|---|---|
| MITSUBISHI MR993742 | 425x686x16 | 35mm L |
| | - | 35mm L |

## 735204 ALB

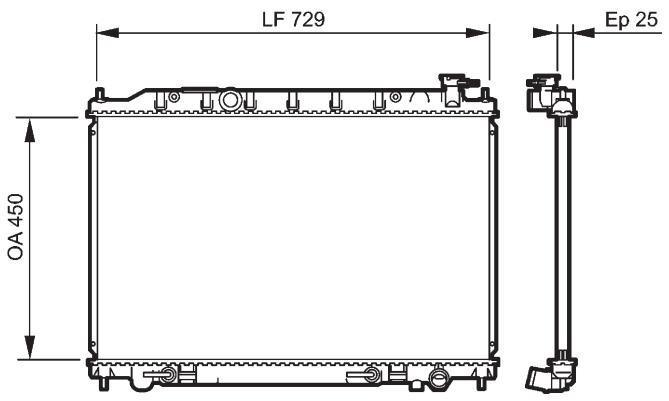


| | | |
|---|---|---|
| NISSAN 21460CA010 | 450x729x25 | 35mm L |
| | + | 35mm L |

## 735205 ALB

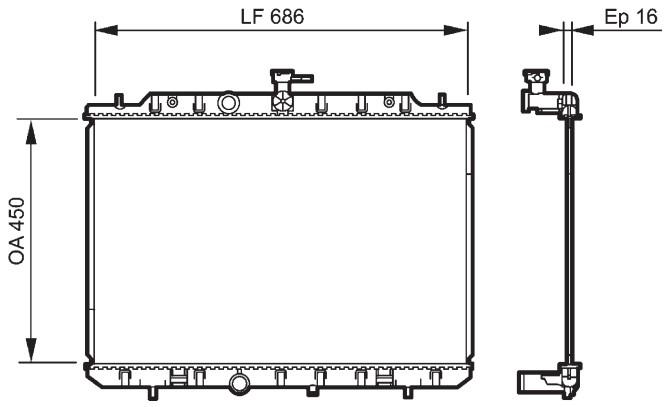


| | | |
|---|---|---|
| NISSAN 21400JG300 | 450x686x16 | 35mm L |
| | - | 35mm L |

## 735206 ALB

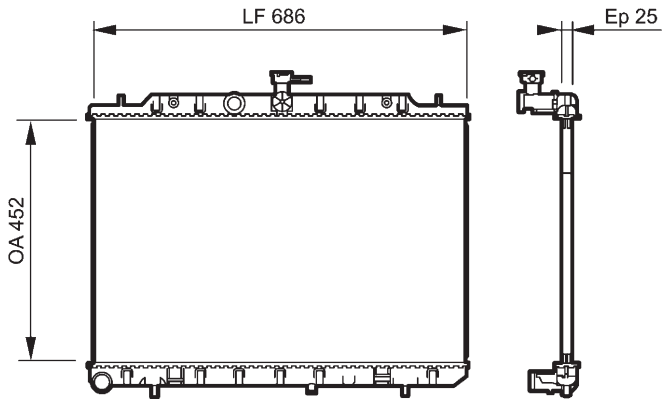


| | | |
|---|---|---|
| NISSAN 21400JG80A | 452x686x25 | 35mm L |
| | - | 35mm L |

## 735208 ALB

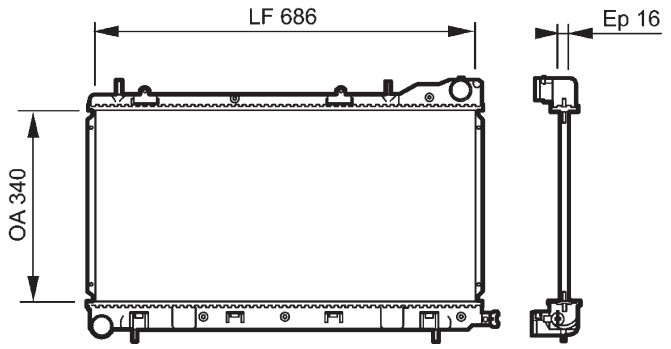


| | | |
|---|---|---|
| SUBARU 45199FC330 | 340x686x16 | 38mm L |
| | - | 38mm L |

## 735209 ALB

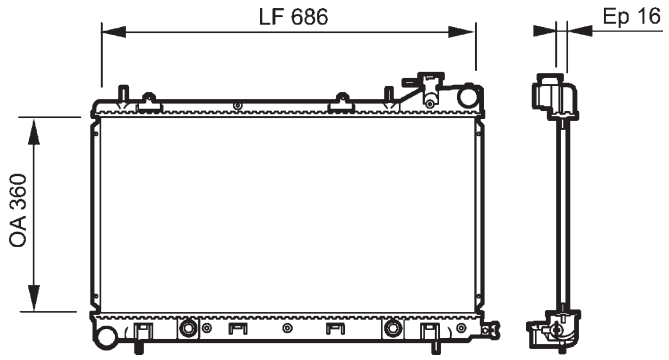


| | | |
|---|---|---|
| SUBARU 45111SA031 | 360x686x16 | 38mm L |
| | + | 38mm L |

## 735210 ALB

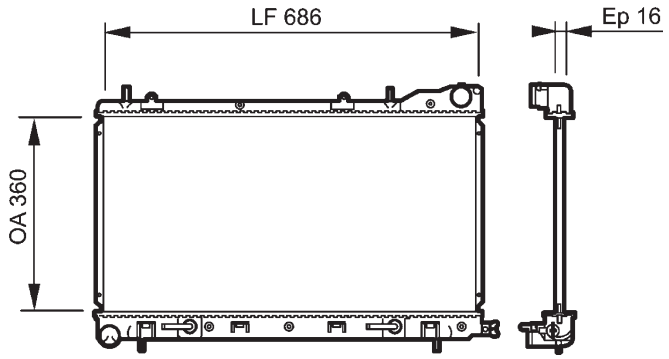


| | | |
|---|---|---|
| SUBARU 45111SA011 | 360x686x16 | 38mm L |
| | + | 38mm L |

## 735211 ALB

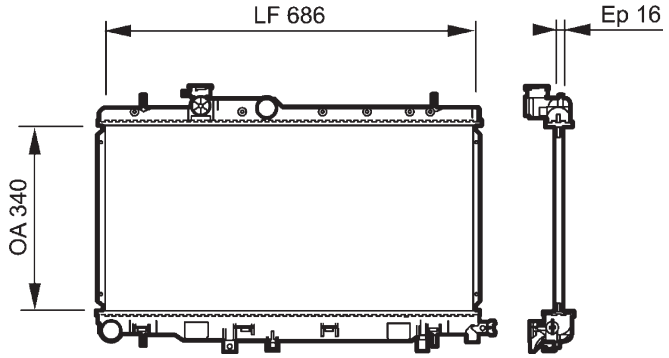


| | | |
|---|---|---|
| SUBARU 45111FE081 | 340x686x16 | 38mm L |
| | - | 38mm L |

## 735212 ALB

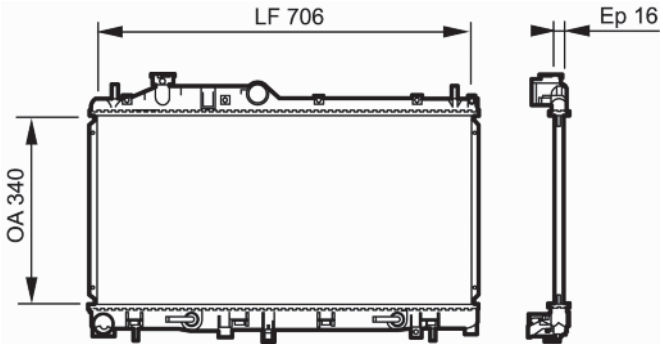


| | | |
|---|---|---|
| SUBARU 45119AG020 | 340x706x16 | 40mm L |
| + | | 40mm L |

## 735215 ALB

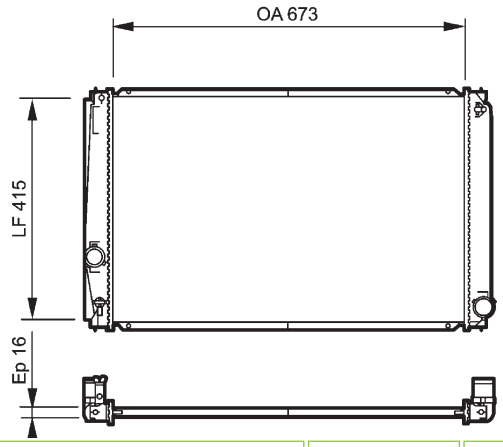


| | | |
|---|---|---|
| TOYOTA 1640028560 | 673x415x16 | 38mm L |
| - | | 38mm L |

## 735213 ALB

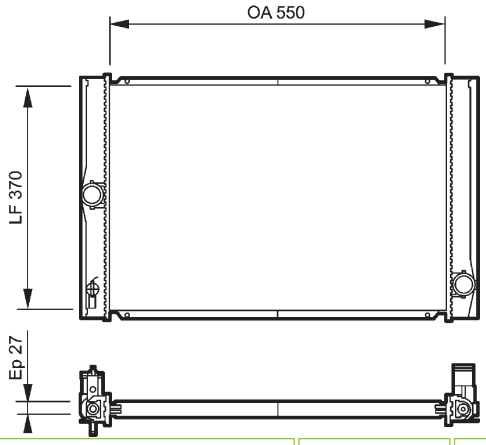


| | | |
|---|---|---|
| TOYOTA 164000N060 | 550x370x27 | 34mm L |
| - | | 34mm L |

## 735216 ALB

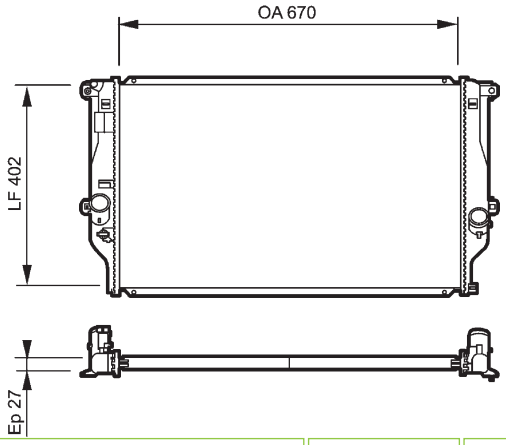


| | | |
|---|---|---|
| TOYOTA 1640026390 | 670x402x27 | 38mm L |
| - | | 38mm L |

## 735214 ALB

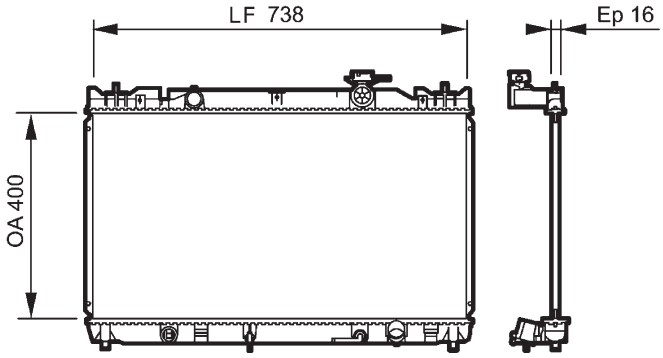


| | | |
|---|---|---|
| TOYOTA 1640028280 | 400x738x16 | 34mm L |
| + | | 34mm L |

## 735221 ALB

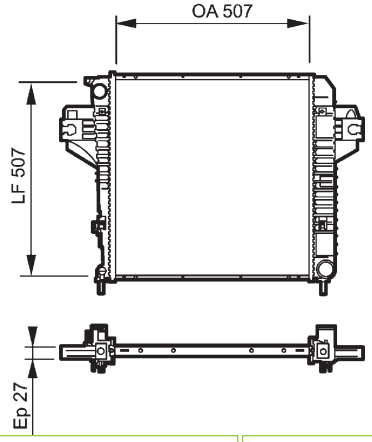


| | | |
|---|---|---|
| JEEP 52079729AC | 507x507x27 | 46mm L |
| - | | 38mm L |

## 735222 ALB

Picture not available
Image non disponible
Imagen no disponible
Immagine non disponibile
Nicht verfügbares Bild
Brak zdjęcia
Картина недоступна

| | | |
|---|---|---|
| JEEP 52080123AA | 507x507x27 | 38mm L |
| | - | 38mm L |

## 735230 ALB

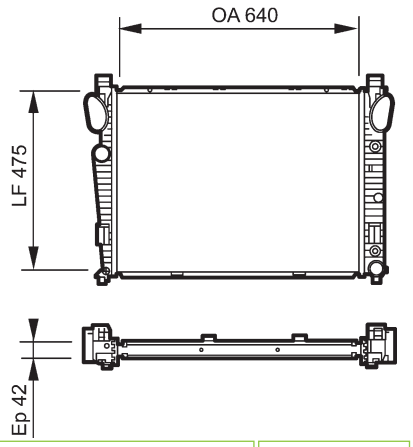


| | | |
|---|---|---|
| MERCEDES 2205002003 | 640x475x42 | 42mm L |
| | + | 42mm L |

## 735223 ALB

Picture not available
Image non disponible
Imagen no disponible
Immagine non disponibile
Nicht verfügbares Bild
Brak zdjęcia
Картина недоступна

| | | |
|---|---|---|
| BMW 17111436063 | 650x435x42 | 42mm QC |
| | - | 42mm QC |

## 735231 ALB

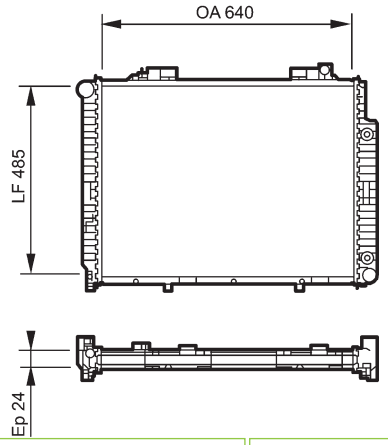


| | | |
|---|---|---|
| MERCEDES 2105006503 | 640x485x24 | 36mm L |
| | + | 36mm L |

## 735229

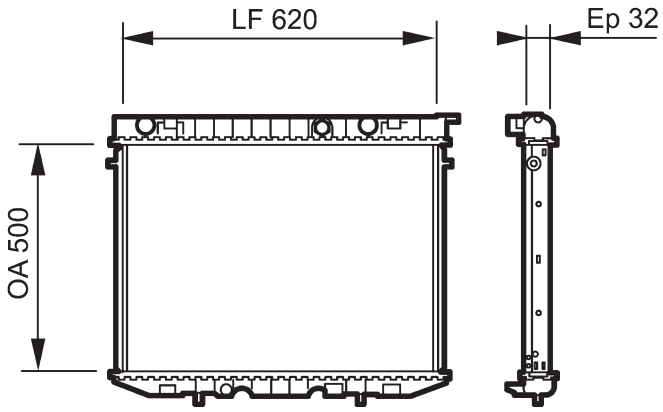


| | | |
|---|---|---|
| OPEL 6302002<br>VAUXHALL 91146915 | 500x620x32 | 38mm L |
| | - | 38mm L |

## 735233 ALB

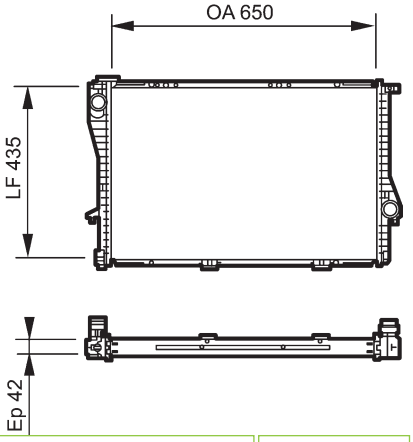


| | | |
|---|---|---|
| BMW 17111436063 | 650x435x42 | 42mm QC |
| | - | 42mm QC |

## 735234 ALB

Picture not available
Image non disponible
Imagen no disponible
Immagine non disponibile
Nicht verfügbares Bild
Brak zdjęcia
Картина недоступна

| | | |
|---|---|---|
| MERCEDES 2205000903 | 640x475x42 | 42mm L |
| + | | 42mm L |

## 735238 ALB

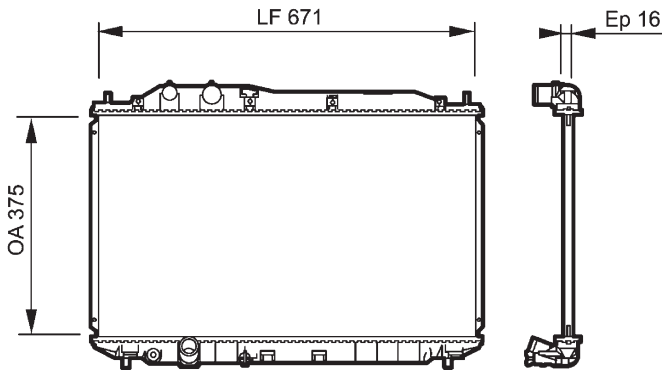


| | | |
|---|---|---|
| HONDA 19010RNAA01 | 375x671x16 | 26 & 32mm L |
| - | | 32mm L |

## 735236 ALB

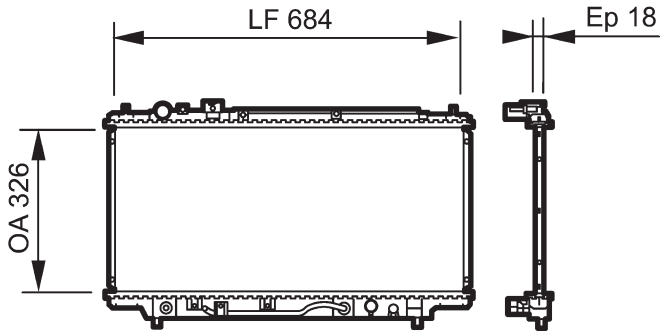


| | | |
|---|---|---|
| MAZDA BPM715200 | 326x684x18 | 30mm L |
| + | | 30mm L |

## 735240 ALB

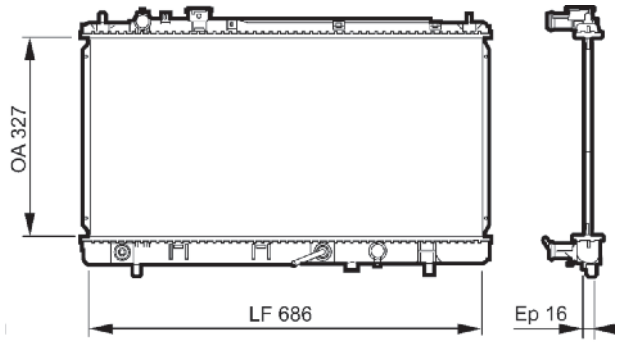


| | | |
|---|---|---|
| MAZDA FS8M15200A | 327x686x16 | 28mm L |
| + | | 28mm L |

## 735237 ALB

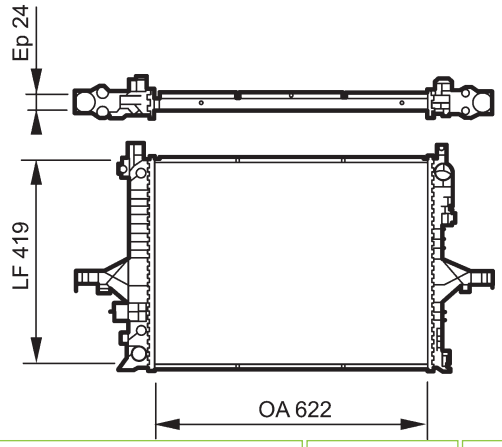


| | | |
|---|---|---|
| VOLVO 8602753 | 622x419x24 | 37mm L |
| - | | 37mm L |

## 735241 ALB

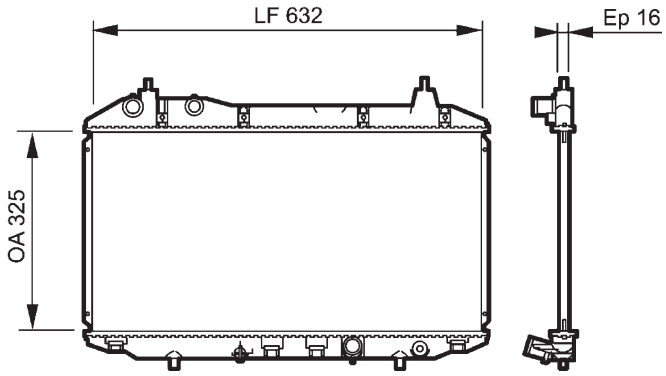


| | | |
|---|---|---|
| HONDA 19010RSHE01 | 325x632x16 | 28 & 26mm L |
| - | | 28mm L |

## 735242 ALB

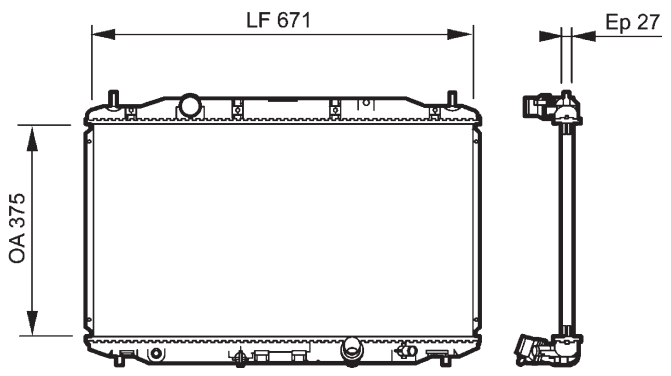


| | | |
|---|---|---|
| HONDA 19010RSRE01 | 375x671x27 | 32mm L |
| | - | 32mm L |

## 735256 RA2032

Picture not available
Image non disponible
Imagen no disponible
Immagine non disponibile
Nicht verfügbares Bild
Brak zdjęcia
Картина недоступна

| | | |
|---|---|---|
| ALFA ROMEO 60690406 | | |
| | - | |

## 735243 ALB

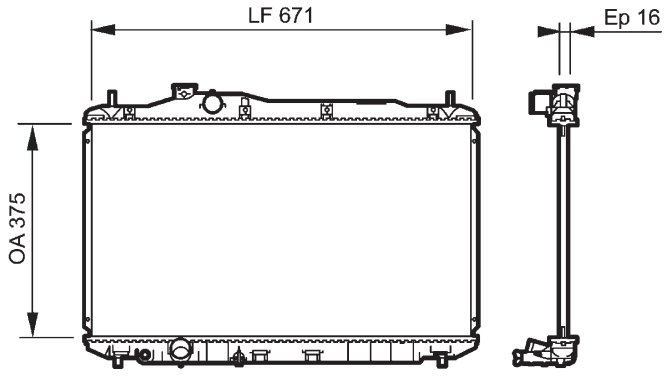


| | | |
|---|---|---|
| HONDA 19010RSAG01 | 375x671x16 | 32mm L |
| | - | 32mm L |

## 735257

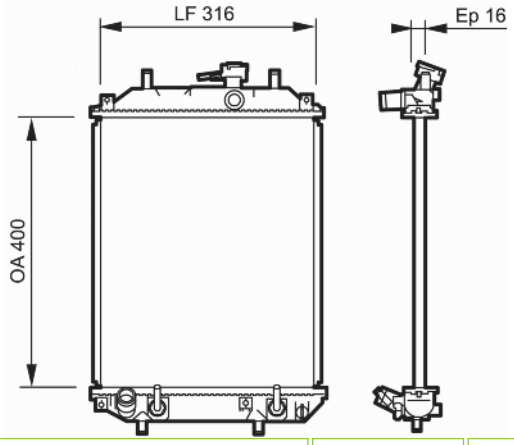


| | | |
|---|---|---|
| DAIHATSU 16400B2070000 | 400x316x16 | 25mm L |
| | + | 25mm L |

## 735250

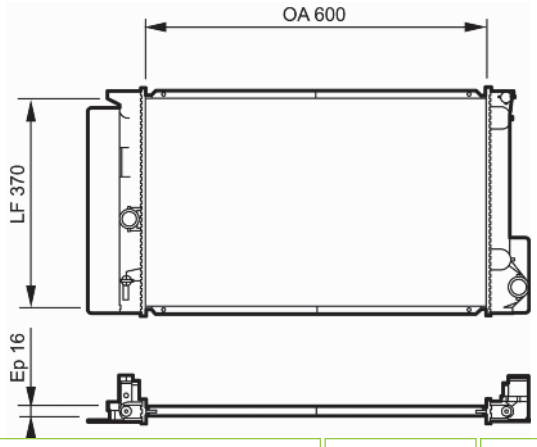


| | | |
|---|---|---|
| TOYOTA 1640022160 | 600x370x16 | 34mm L |
| | - | 34mm L |

## 735259 ALB

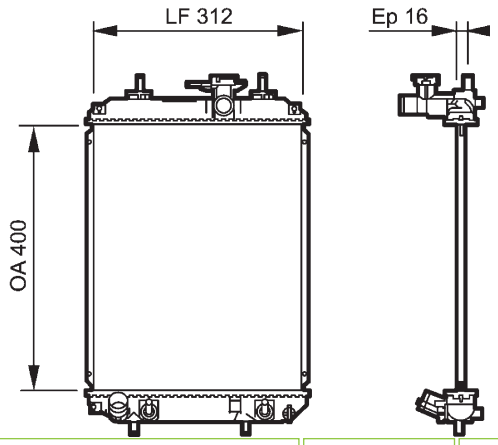


| | | |
|---|---|---|
| DAIHATSU 16400B1010000 | 400x312x16 | 28mm L |
| | + | 28mm L |

## 735266 ALB

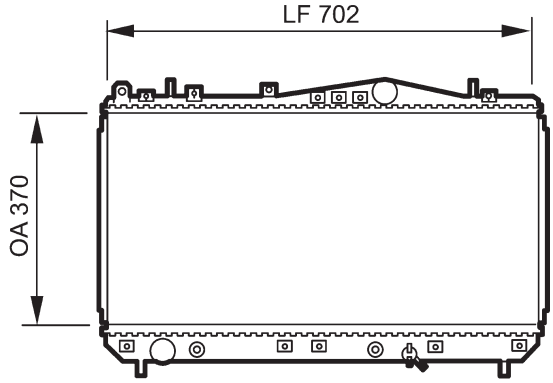


| | | |
|---|---|---|
| DAEWOO 96271475 | 370x702x18 | 34mm L |
| + | | 34mm L |

## 735280 RM2041 ALM

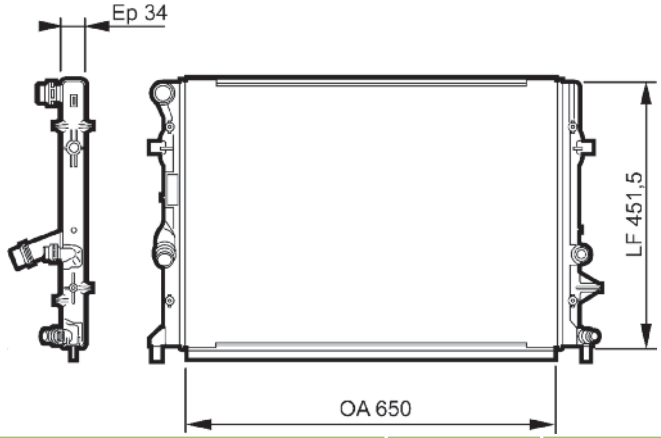


| | | |
|---|---|---|
| SKODA 1K0121251CL<br>VOLKSWAGEN 1K0121251CL | 451,5x650x34 | |
| - | | |

## 735278 RA1602 ALB

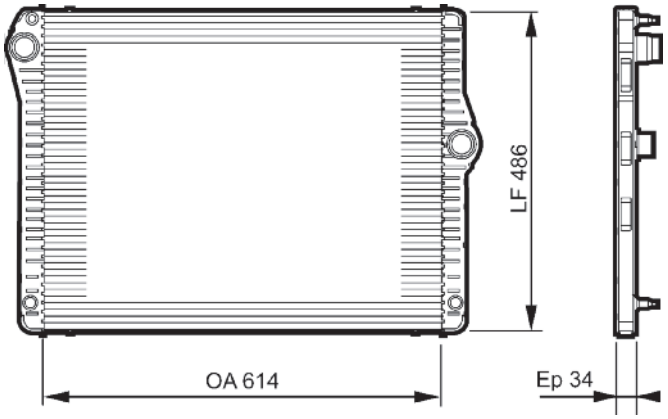


| | | |
|---|---|---|
| BMW 17117612954 | 486x614x34 | |
| - | | |

## 735285 RA2088

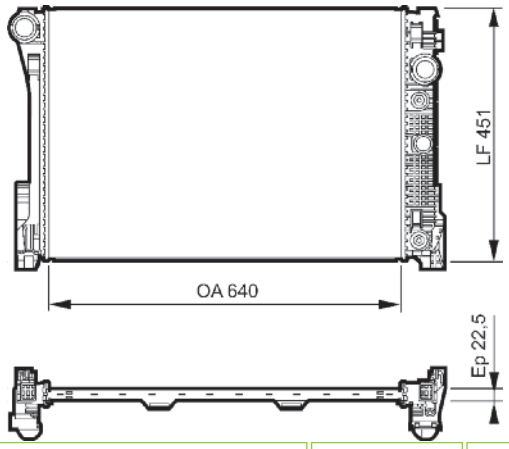


| | | |
|---|---|---|
| MERCEDES 2045002203 | 451,5x640x22.5 | |
| - | | |

## 735279 RA2059 ALB

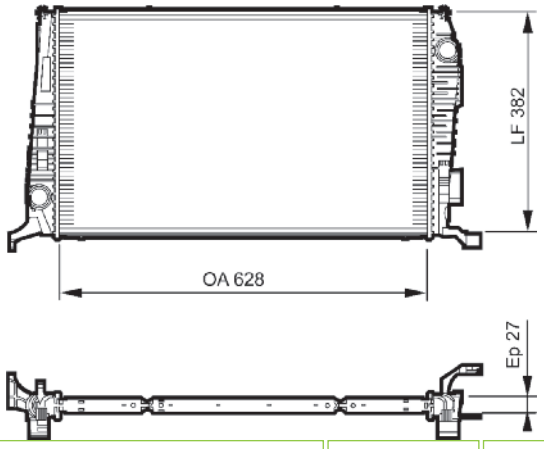


| | | |
|---|---|---|
| DACIA 8200880550 | 382x628x27 | |
| - | | |

## 735287 RA2092 ALB

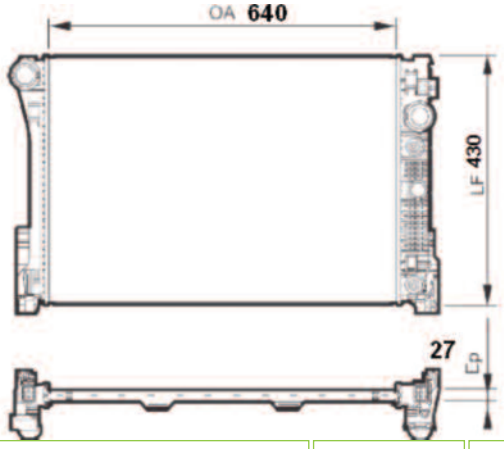


| | | |
|---|---|---|
| MERCEDES 2045002803 | 640x430x27 | |
| - | | |

## 735292 RA2086 ALB

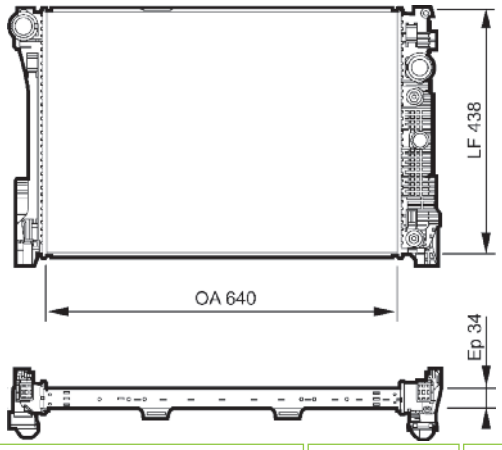


| | | |
|---|---|---|
| MERCEDES 2045003603 | 438x640x34 | |
| | - | |

## 735298 RA2067 ALB

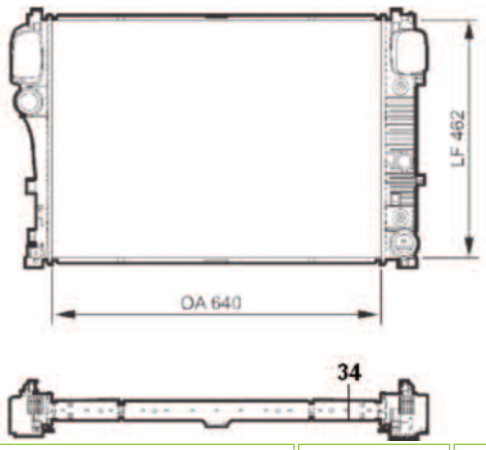


| | | |
|---|---|---|
| MERCEDES 2215003103 | 462x640 | |
| | - | |

## 735296

Picture not available
Image non disponible
Imagen no disponible
Immagine non disponibile
Nicht verfügbares Bild
Brak zdjęcia
Картина недоступна

| | | |
|---|---|---|
| FIAT 46826678 | 520x370x24 | |
| | - | |

## 735299 RA2066 ALB

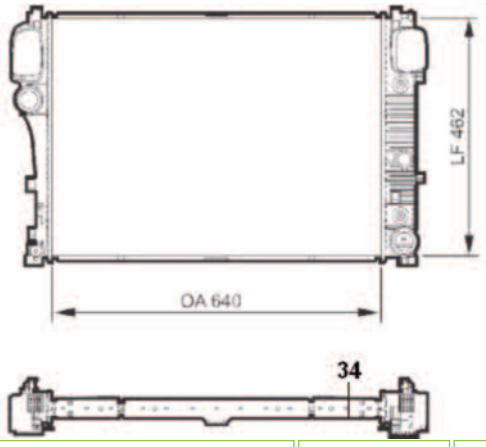


| | | |
|---|---|---|
| MERCEDES 2215003203 | 462x640 | |
| | - | |

## 735297

Picture not available
Image non disponible
Imagen no disponible
Immagine non disponibile
Nicht verfügbares Bild
Brak zdjęcia
Картина недоступна

| | | |
|---|---|---|
| FIAT 51718122 | 430x595 | |
| | - | |

## 735310 RA2078

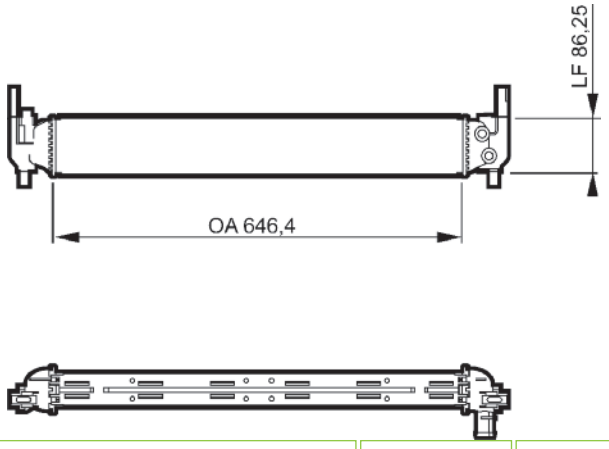


| | | |
|---|---|---|
| VOLKSWAGEN 6R0145805H | 86,25x646,4x56 | ALB |
| | | |

## 735350

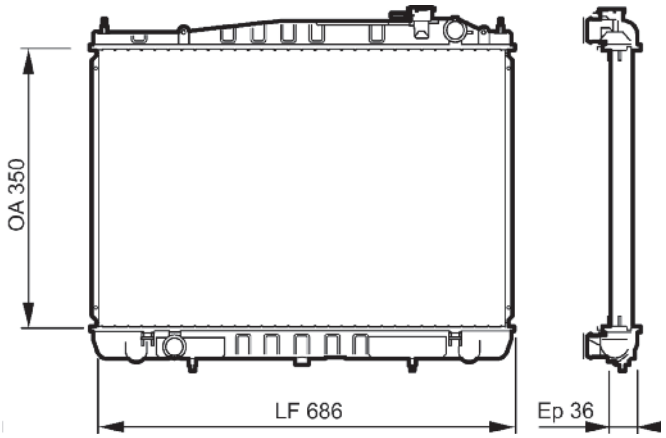


| | | |
|---|---|---|
| NISSAN 214102S810 | 686x450 | |
| | - | |

## 735372 RM1347

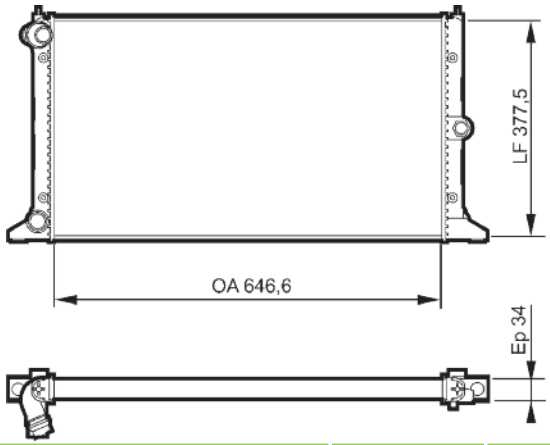


| | | |
|---|---|---|
| FORD 1209590 | 646,6x377,5x24 | |
| | - | |

## 735351 ALB

Picture not available
Image non disponible
Imagen no disponible
Immagine non disponibile
Nicht verfügbares Bild
Brak zdjęcia
Картина недоступна

| | | |
|---|---|---|
| JEEP 52080118AA | 507x507x27 | 36mm |
| | + | |

## 735373 RA1581

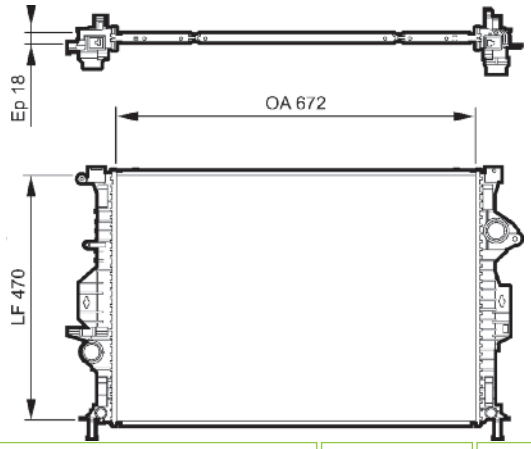


| | | |
|---|---|---|
| FORD 1493773 | 672x470x24 | |
| | - | |

## 735371 RA2036

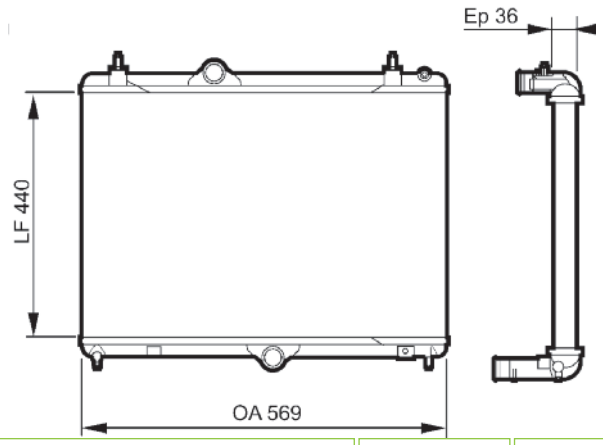


| | | |
|---|---|---|
| CITROEN 1330X2<br>PEUGEOT 1330X2 | 569x440x24 | |
| | - | |

## 735374 RA1582

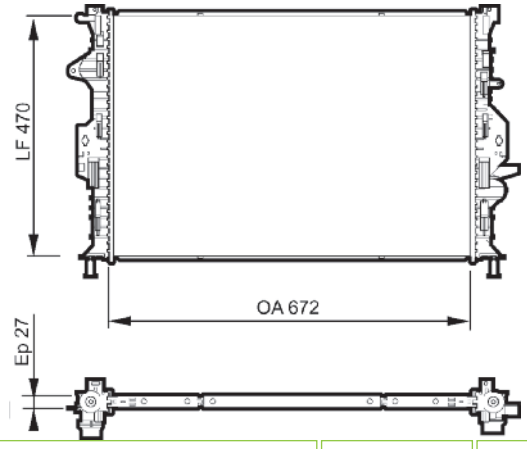


| | | |
|---|---|---|
| FORD 1493774 | 672x470x24 | |
| | - | |

## 735375 RA2164 ALB

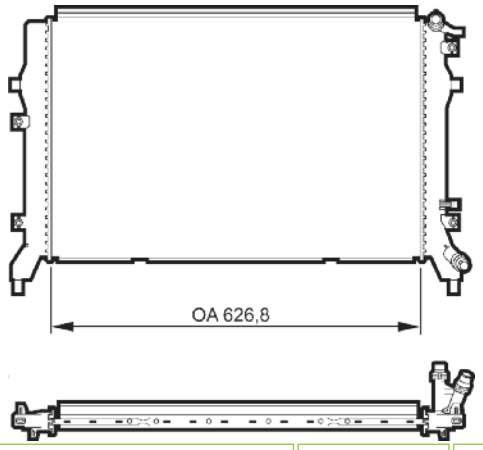


| | | |
|---|---|---|
| VOLKSWAGEN 1K0121251EC | 626,8 | |
| | - | |

## 735379 RA1686 ALB

Picture not available
Image non disponible
Imagen no disponible
Immagine non disponibile
Nicht verfügbares Bild
Brak zdjęcia
Картина недоступна

| | | |
|---|---|---|
| FORD 1671561 | 558,5x350x18 | |
| | - | |

## 735376 RA1583

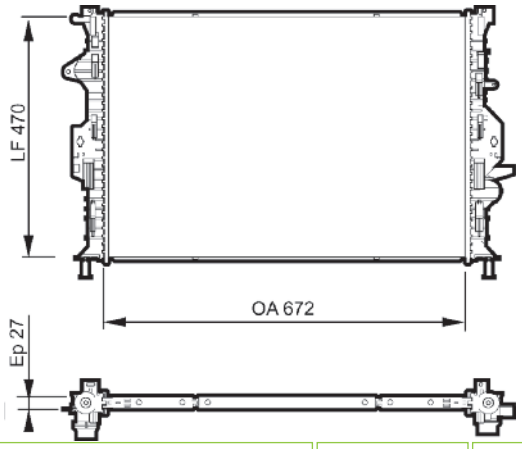


| | | |
|---|---|---|
| FORD 1493771 | 672x470x24 | |
| | - | |

## 735381 RA2083 ALB

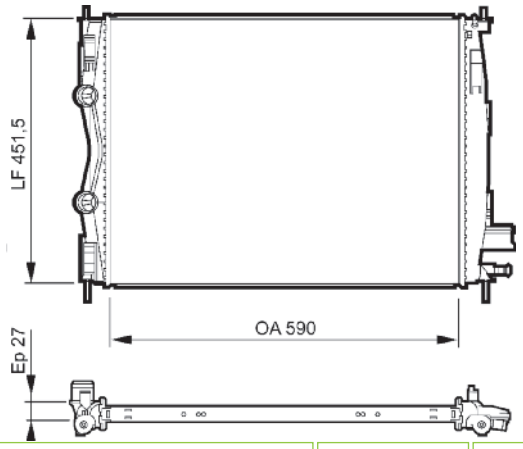


| | | |
|---|---|---|
| NISSAN 21410JD50C | 590x451,5x27 | |
| | - | |

## 735378 RA1672 ALB

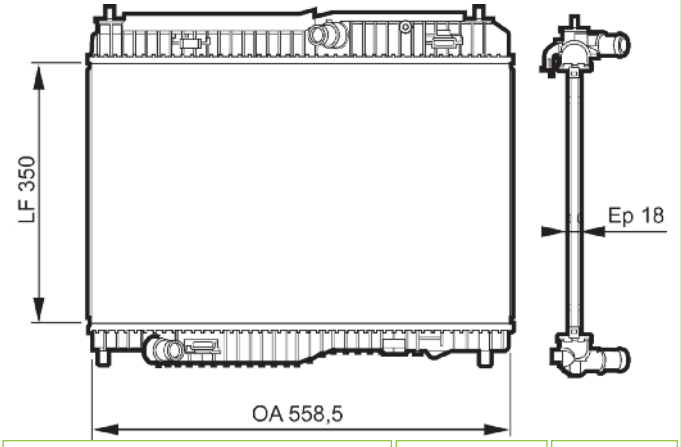


| | | |
|---|---|---|
| FORD 1671390 | 558,5x350x18 | |
| | - | |

## 735382 RA1364 ALB

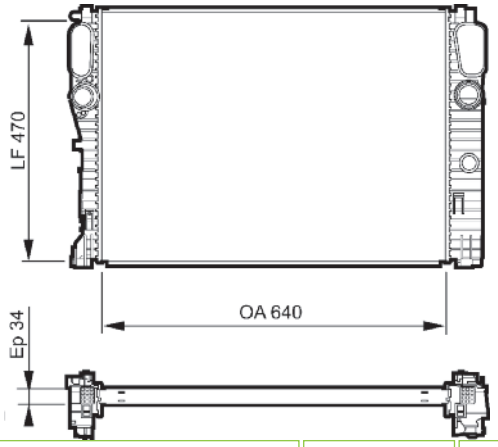


| | | |
|---|---|---|
| MERCEDES 2115003402 | 640x470x34 | |
| | - | |

## 735383

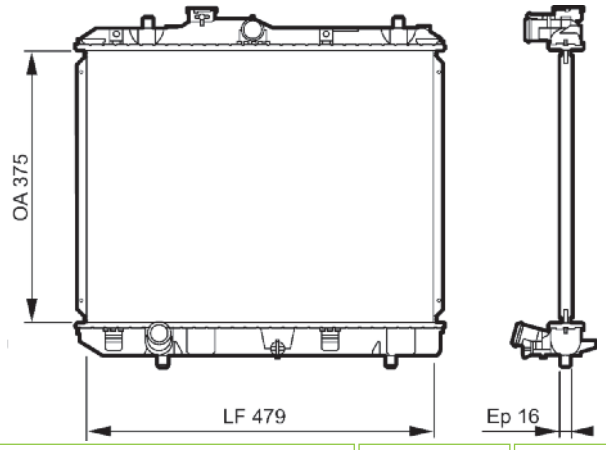


| | | |
|---|---|---|
| OPEL 4709362 | 375x479 | |
| | - | |

## 735405 ALB

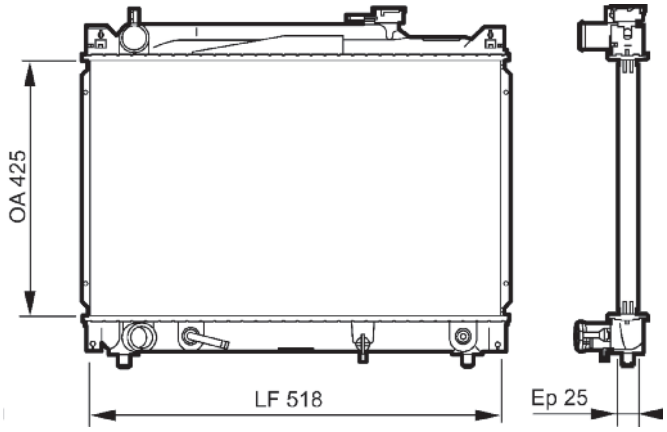


| | | |
|---|---|---|
| SUZUKI 1770077E10 | 518x425x25 | |
| | - | |

## 735400 ALB

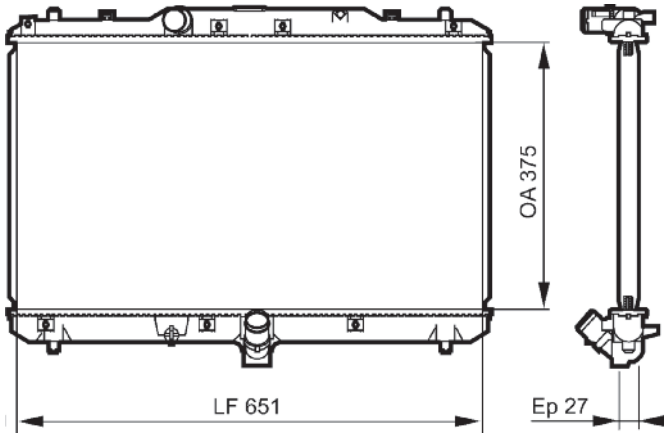


| | | |
|---|---|---|
| SUZUKI 1770079J50 | 375x651x27 | 34mm L |
| | - | 34mm L |

## 735407 ALB

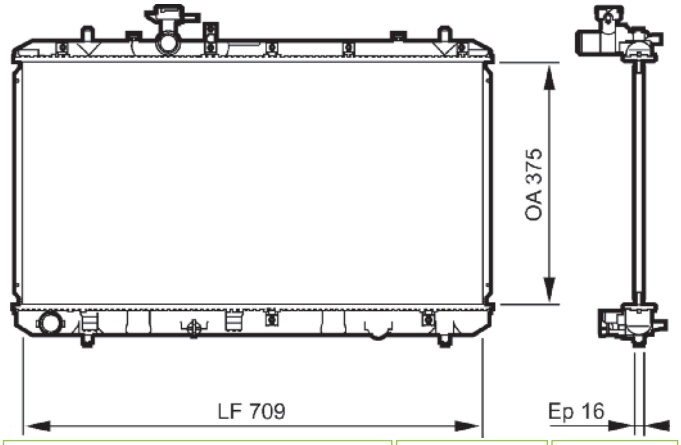


| | | |
|---|---|---|
| SUZUKI 1770079J00 | 375x709x16 | 34mm L |
| | - | 34mm L |

## 735404 ALB

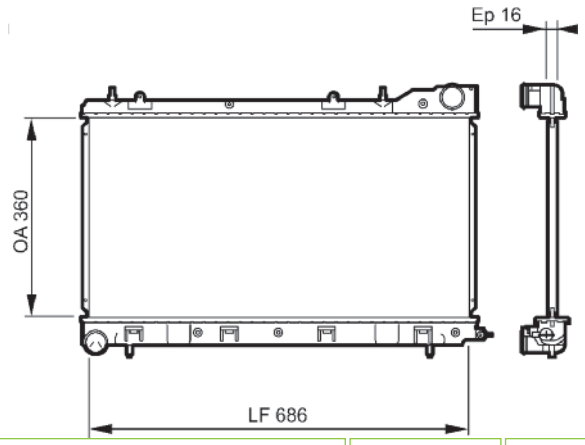


| | | |
|---|---|---|
| SUBARU 45111SA081 | 360x686x16 | |
| | - | |

## 735415

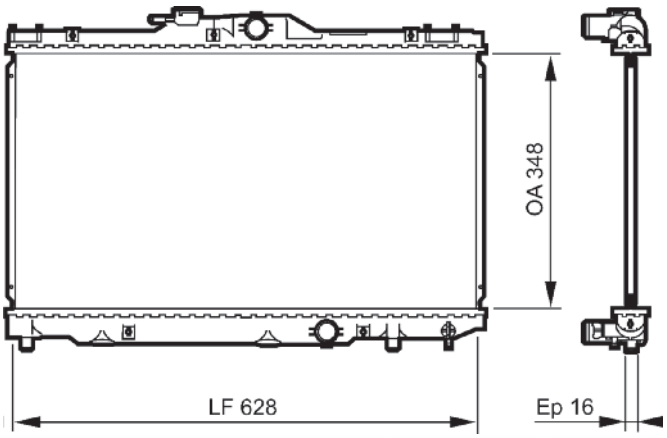


| | | |
|---|---|---|
| TOYOTA 164000D030 | 628x348 | |
| | - | |

## 735416 ALB

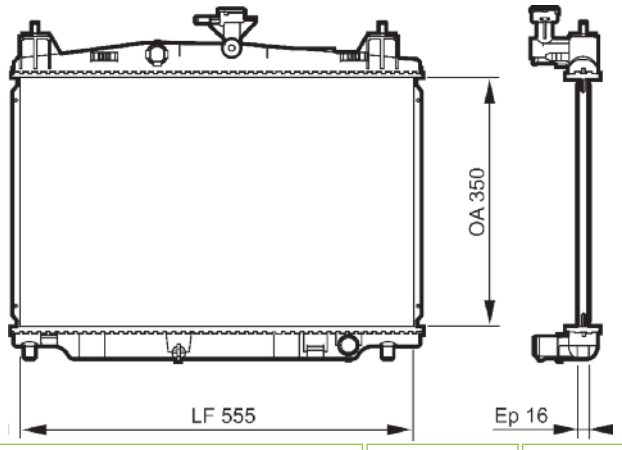


| | | | |
|---|---|---|---|
| MAZDA | ZJ3815200A | 350x555x16 | 28mm L |
| | | | 28mm L |

## 735433 ALB

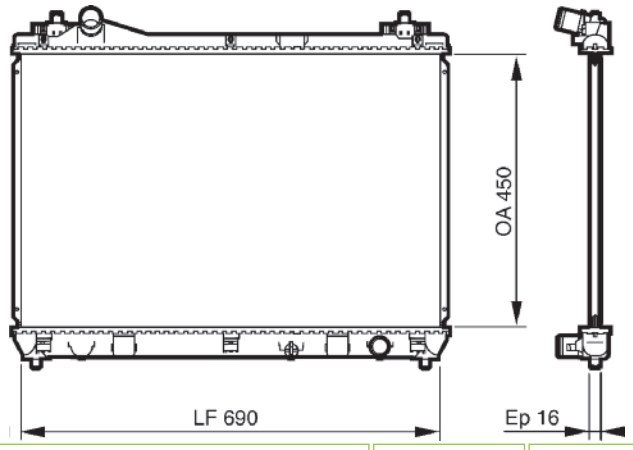


| | | | |
|---|---|---|---|
| SUZUKI | 1770066J00 | 450x690x16 | 34mm L |
| | | | 34mm L |

## 735420 ALB

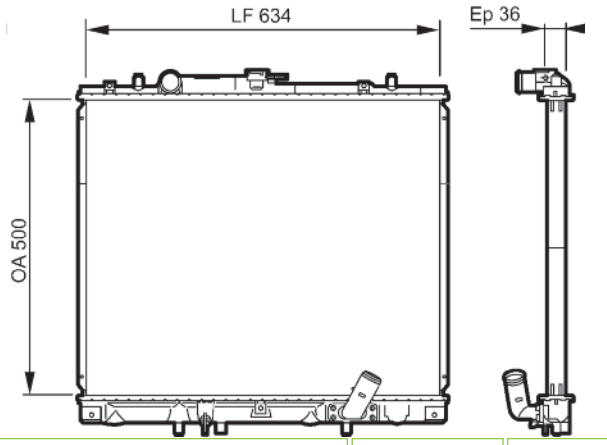


| | | | |
|---|---|---|---|
| MITSUBISHI | MR571147 | 500x600x36 | |
| | | | |

## 735437 CBS

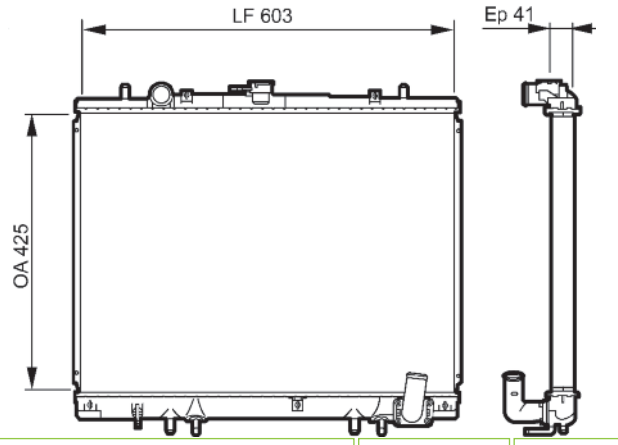


| | | | |
|---|---|---|---|
| MITSUBISHI | MR281024 | 425x603x41 | |
| | | | |

## 735428 CBS

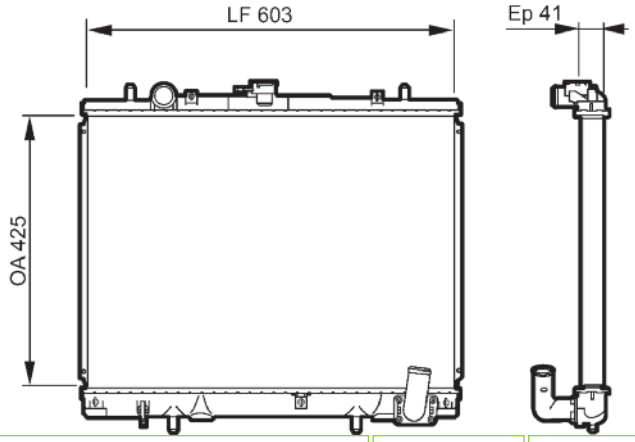


| | | | |
|---|---|---|---|
| MITSUBISHI | MR281023 | 425x603x41 | |
| | | | |

## 735441 ALB

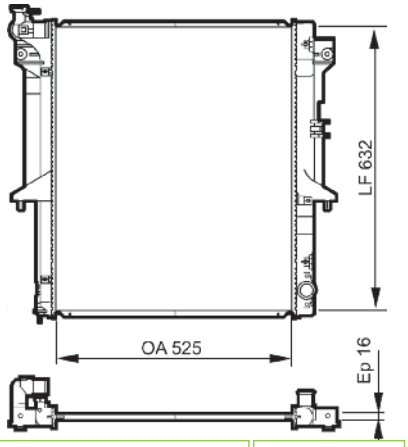


| | | | |
|---|---|---|---|
| MITSUBISHI | 1350A182 | 525x632x16 | |
| | | | |

## 735442

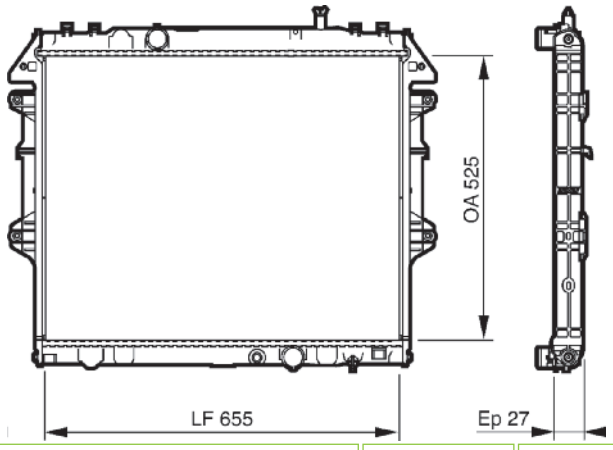


| | | |
|---|---|---|
| TOYOTA 164000L250 | 525x655 | |
| | - | |

## 735451

Picture not available
Image non disponible
Imagen no disponible
Immagine non disponibile
Nicht verfügbares Bild
Brak zdjęcia
Картина недоступна

| | | |
|---|---|---|
| BMW 17117600511 | 600x348 | |
| | - | |

## 735445 ALB

Picture not available
Image non disponible
Imagen no disponible
Immagine non disponibile
Nicht verfügbares Bild
Brak zdjęcia
Картина недоступна

| | | |
|---|---|---|
| TOYOTA 164000Q040 | 350x479x16 | 31mm |
| | - | |

## 735453

Picture not available
Image non disponible
Imagen no disponible
Immagine non disponibile
Nicht verfügbares Bild
Brak zdjęcia
Картина недоступна

| | | |
|---|---|---|
| BMW 17117600516 | 600x350,2 | |
| | - | |

## 735449

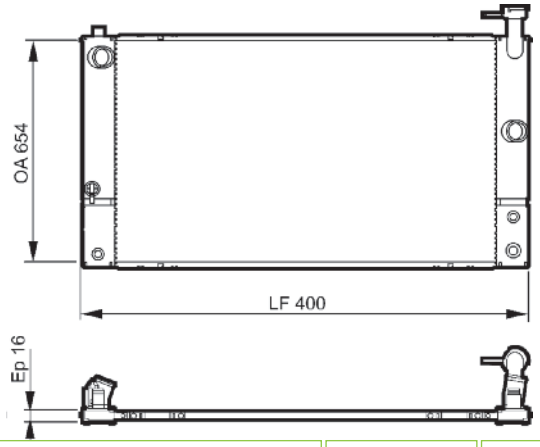


| | | |
|---|---|---|
| TOYOTA 1604121280 | 600x351 | |
| | - | |

## 735454

Picture not available
Image non disponible
Imagen no disponible
Immagine non disponibile
Nicht verfügbares Bild
Brak zdjęcia
Картина недоступна

| | | |
|---|---|---|
| BMW 17117600520 | 600x350,2 | |
| | - | |

## 735455

Picture not available
Image non disponible
Imagen no disponible
Immagine non disponibile
Nicht verfügbares Bild
Brak zdjęcia
Картина недоступна

| | | |
|---|---|---|
| BMW 17117618807 | 600x350,2 | |
| | - | |

## 735472 ALB

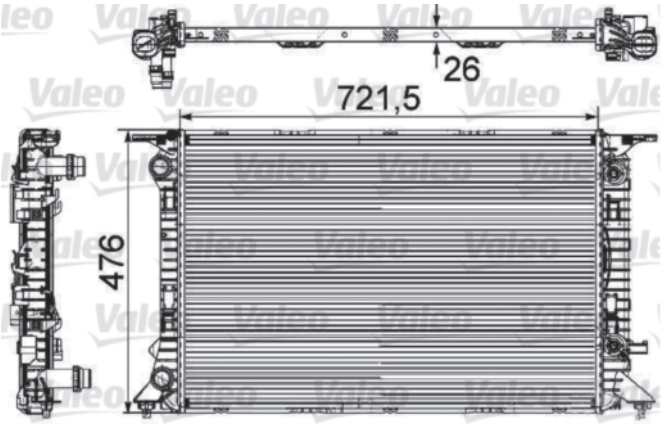


| | | |
|---|---|---|
| AUDI 8K0121251T | 721,5x476x26 | |
| | - | |

## 735469

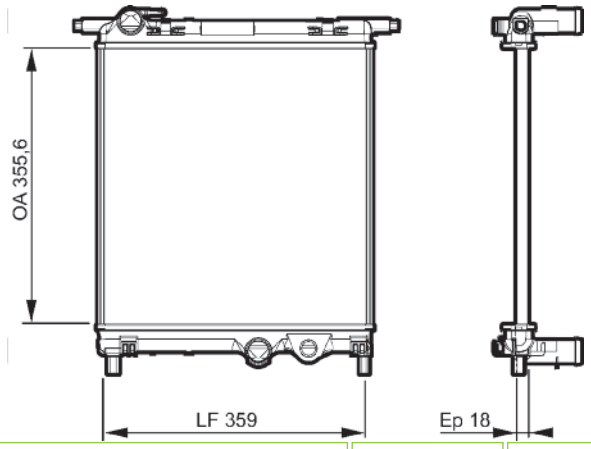


| | | |
|---|---|---|
| VOLKSWAGEN 1S0121253P | 356x359 | |
| | - | |

## 735473 ALB

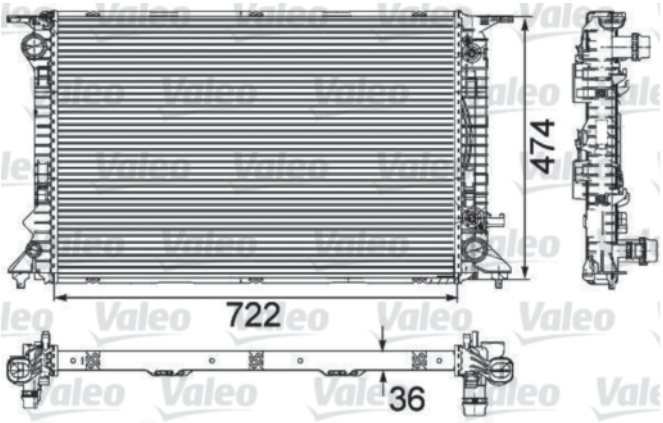


| | | |
|---|---|---|
| AUDI 8K0121251AA | 722x474x36 | |
| | - | |

## 735471 ALM

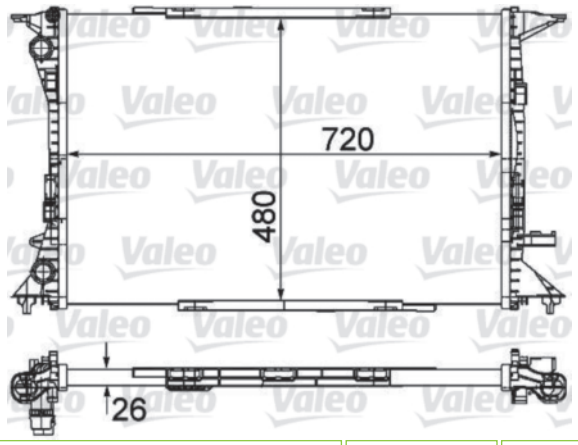


| | | |
|---|---|---|
| AUDI 8K0121251R | 720x480x26 | |
| | - | |

## 735474 ALB

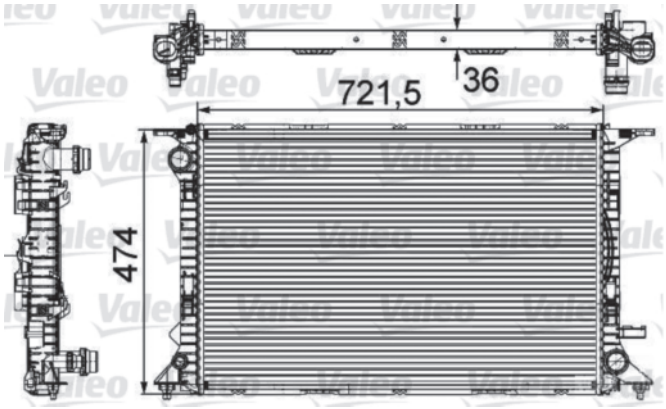


| | | |
|---|---|---|
| AUDI 8K0121251H | 721,5x474x36 | |
| | - | |

## 735475 ALB

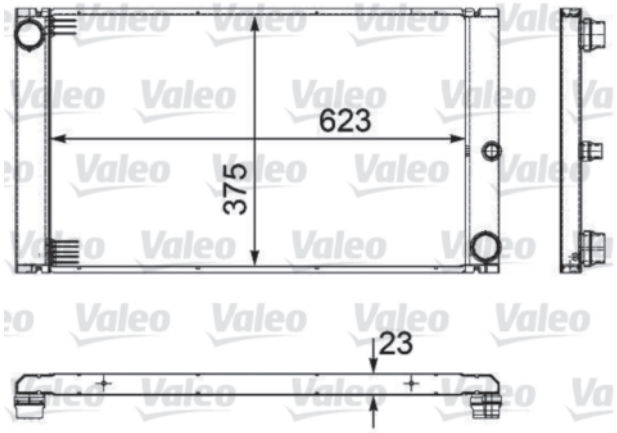


| | | |
|---|---|---|
| BMW 17117795878 | 623x375x23 | |
| | - | |

## 735476 ALB

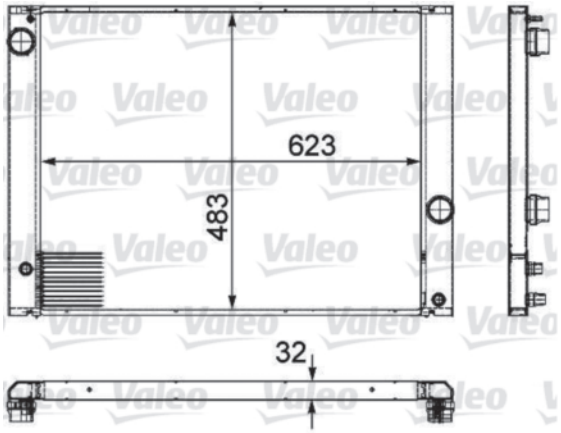


| | | |
|---|---|---|
| BMW 17117534914 | 623x483x32 | |
| | - | |

## 735477 ALB

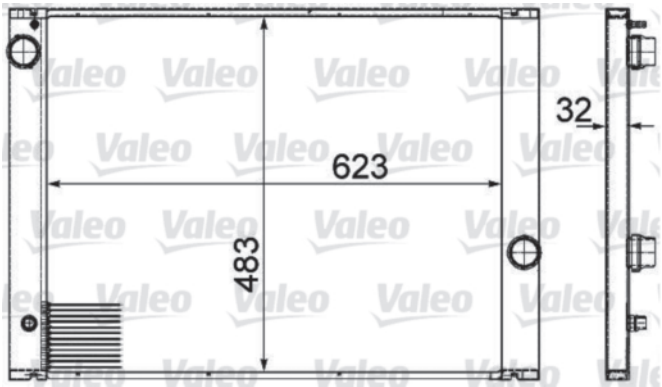


| | | |
|---|---|---|
| BMW 17117534915 | 623x483x32 | |
| | - | |

## 735478 ALB

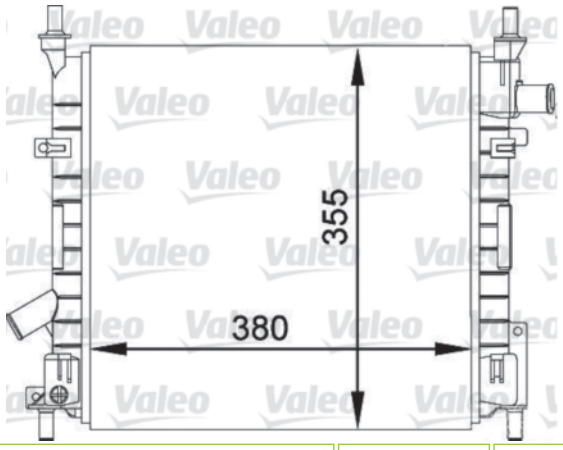


| | | |
|---|---|---|
| FORD 1221061 | 380x355x14 | |
| | - | |

## 735479 ALB

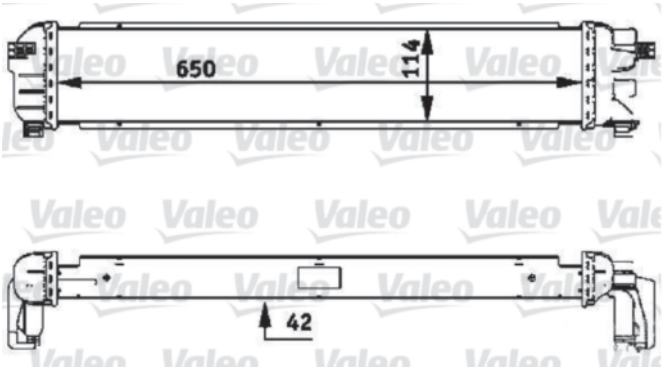


| | | |
|---|---|---|
| MERCEDES 2035000100 | 650x114x42 | |
| | - | |

## 735480 ALB

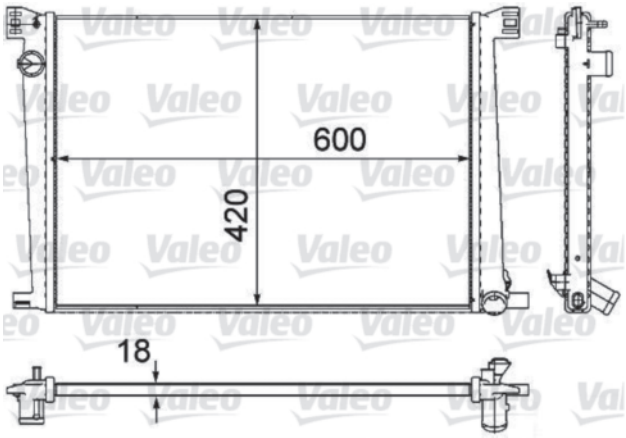


| | | |
|---|---|---|
| MINI 17117535099 | 600x420x18 | |
| | - | |

## 735481 ALB

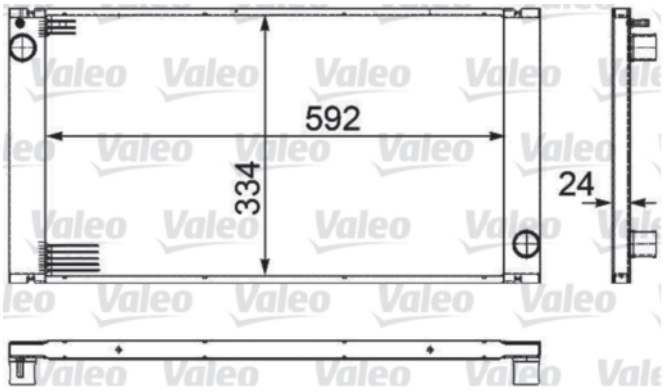


| | | |
|---|---|---|
| MINI 17112751275 | 592x334x24 | |
| | - | |

## 735484 ALB

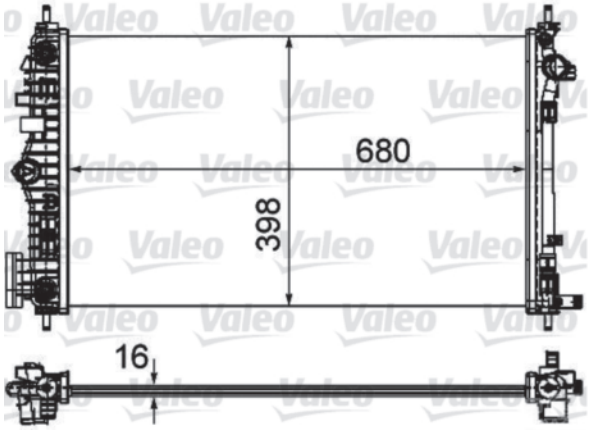


| | | |
|---|---|---|
| OPEL 1300294<br>VAUXHALL 13241729 | 680x398x16 | |
| | - | |

## 735482 ALB

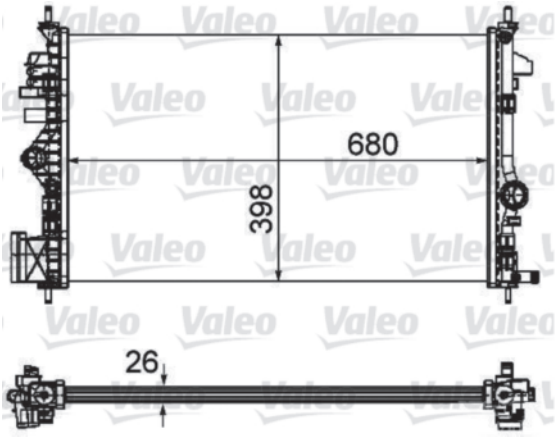


| | | |
|---|---|---|
| OPEL 1300291 | 680x398x26 | |
| | - | |

## 735485 ALB

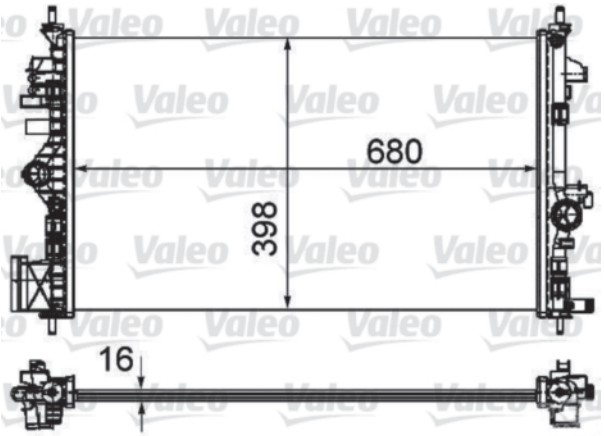


| | | |
|---|---|---|
| OPEL 1300292<br>VAUXHALL 13241726 | 680x398x16 | |
| | - | |

## 735483 ALB

| | | |
|---|---|---|
| OPEL 1300293<br>VAUXHALL 13241728 | 680x398x16 | |
| | - | |

## 735486 ALB

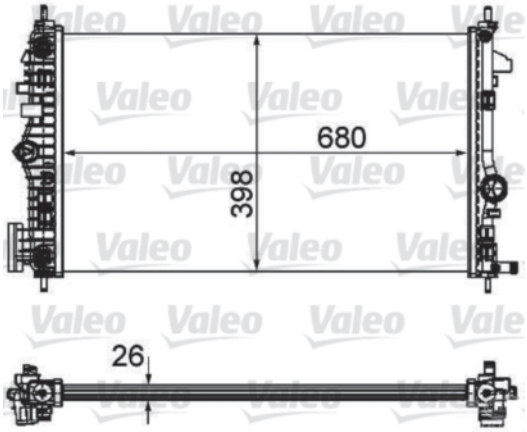


| | | |
|---|---|---|
| OPEL 1300290<br>VAUXHALL 13241724 | 680x398x26 | |
| | - | |

## 735487 ALB

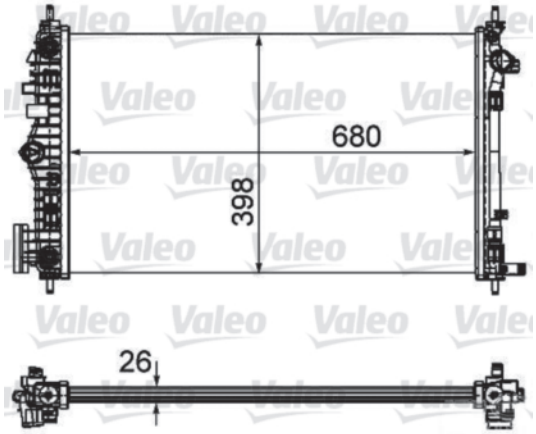


| | | |
|---|---|---|
| OPEL 1300288<br>VAUXHALL 13241722 | 680x398x26 | |
| | - | |

## 735490 ALB

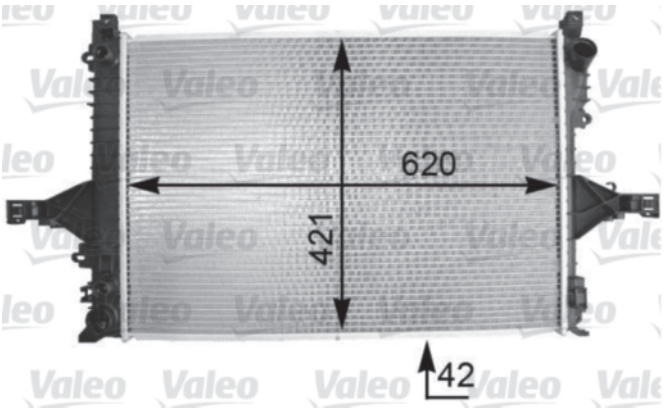


| | | |
|---|---|---|
| VOLVO 36002407 | 620x421x42 | |
| | - | |

## 735488 ALB

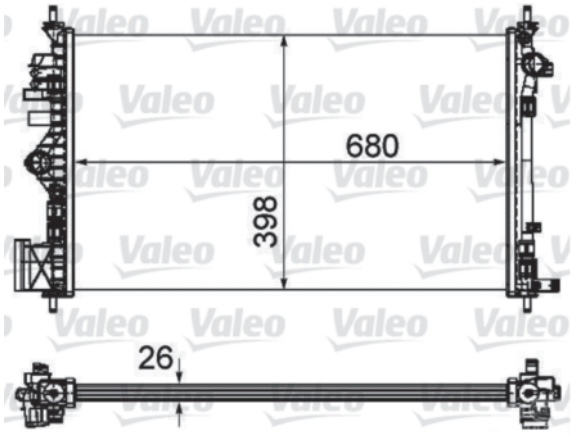


| | | |
|---|---|---|
| OPEL 1300289<br>VAUXHALL 13241723 | 680x398x26 | |
| | - | |

## 735498 ALB

Picture not available
Image non disponible
Imagen no disponible
Immagine non disponibile
Nicht verfügbares Bild
Brak zdjęcia
Картина недоступна

| | | |
|---|---|---|
| FIAT 51835025 | 480x395x26 | |
| | - | |

## 735489 ALM

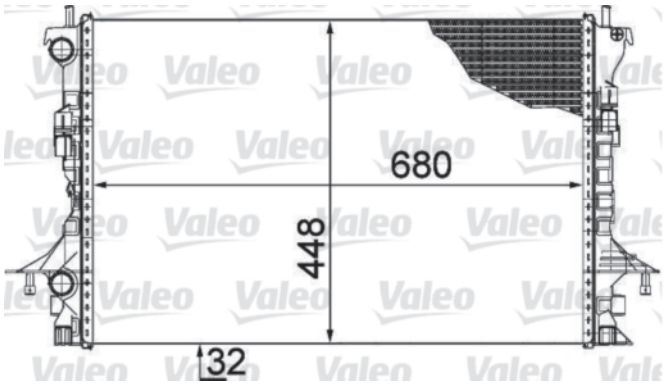


| | | |
|---|---|---|
| RENAULT 8200292771 | 680x448x32 | |
| | - | |

## 735562 ALB

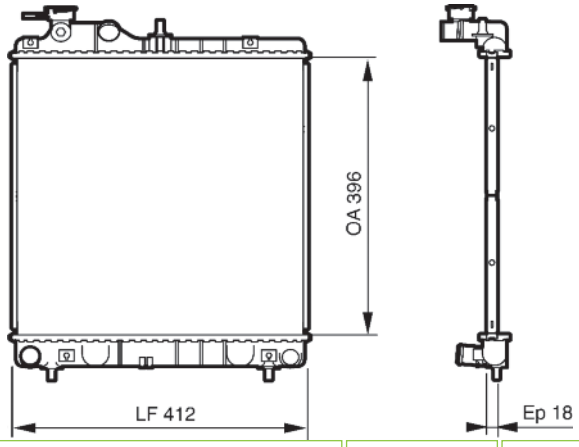


| | | |
|---|---|---|
| HYUNDAI 2531005500 | 396x412x18 | |
| | - | |

## 735563 ALB

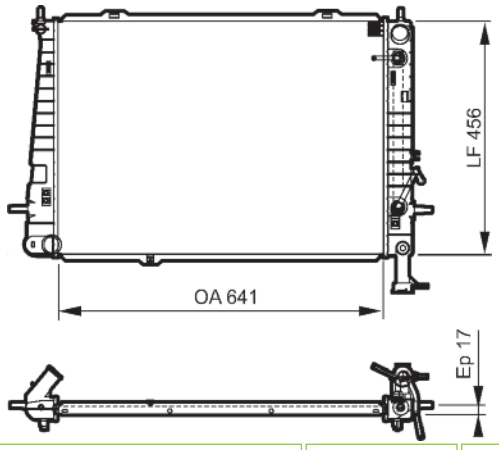


| | | |
|---|---|---|
| KIA 253102E100 | 456x641x17 | 35mm L |
| + | | 35mm L |

## 735567 ALB

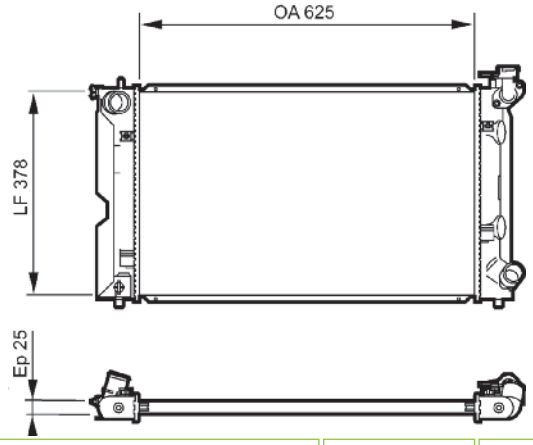


| | | |
|---|---|---|
| TOYOTA 164006A290 | 625x378 | |
| - | | |

## 735564 ALB

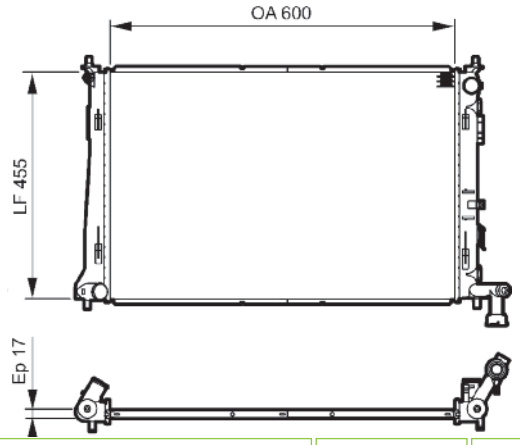


| | | |
|---|---|---|
| HYUNDAI 253102H000 | 455x600x17 | 33mm L |
| - | | 33mm L |

## 735568 ALB

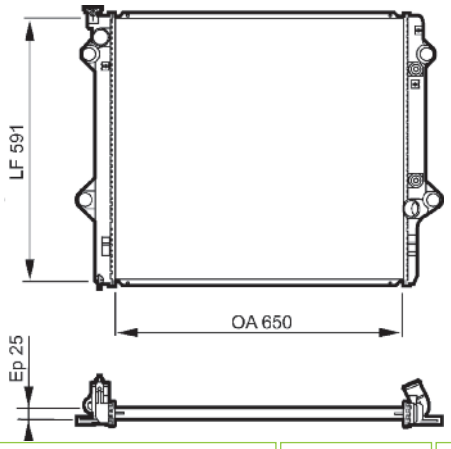


| | | |
|---|---|---|
| TOYOTA 1640030140 | 650x591x25 | 38mm L |
| + | | 38mm L |

## 735565

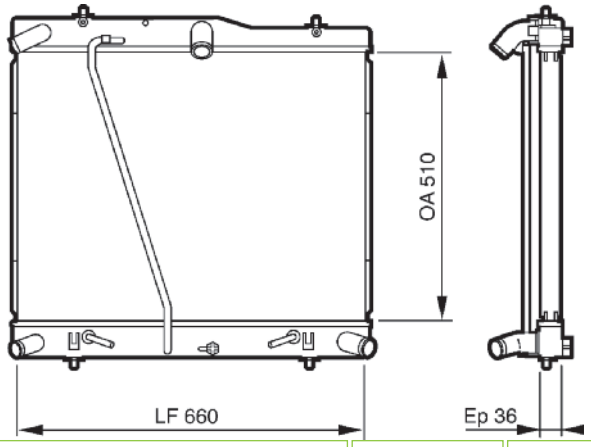


| | | |
|---|---|---|
| TOYOTA 1640030170 | 660x510 | |
| - | | |

## 735569 ALB

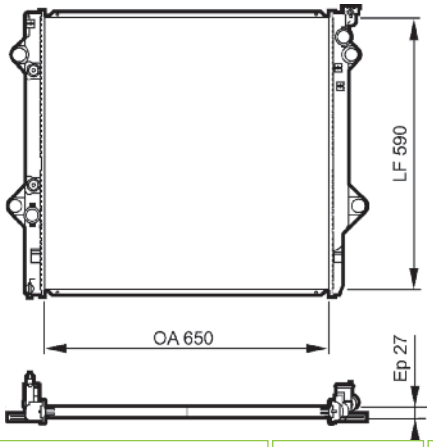


| | | |
|---|---|---|
| TOYOTA 1640031351 | 650x590x27 | 34mm L |
| + | | 34mm L |

## 735571 ALB

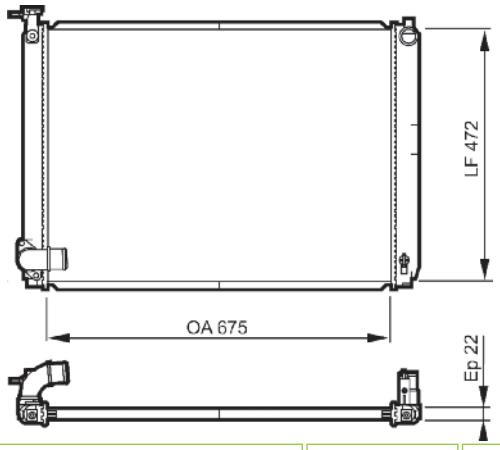


| | | |
|---|---|---|
| LEXUS 1604120352 | 675x472x22 | 34mm L |
| | | 38mm L |

## 735574 ALB

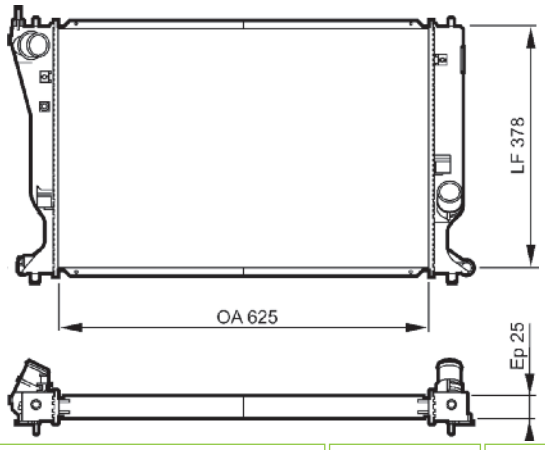


| | | |
|---|---|---|
| TOYOTA 164000N031 | 625x378x25 | 31mm L |
| | | 31mm L |

## 735572 ALB

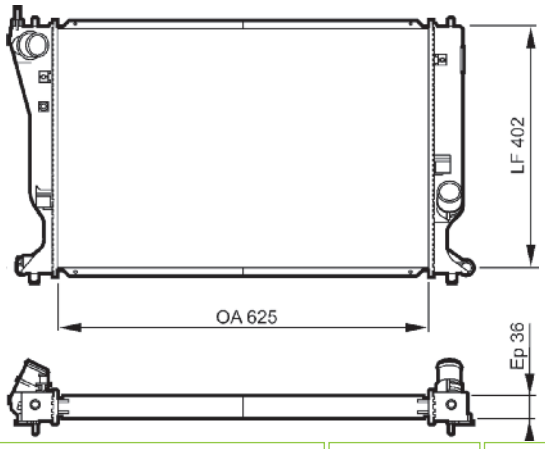


| | | |
|---|---|---|
| TOYOTA 164000R011 | 625x402x26 | 38mm L |
| | | 38mm L |

## 735575 ALB

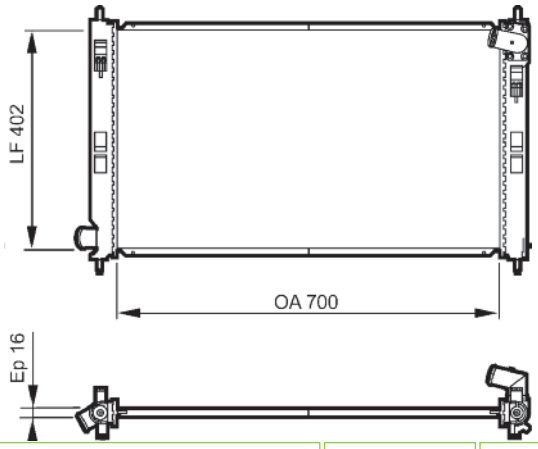


| | | |
|---|---|---|
| MITSUBISHI 1350A297 | 700x402x16 | 35mm L |
| | | 35mm L |

## 735573 ALB

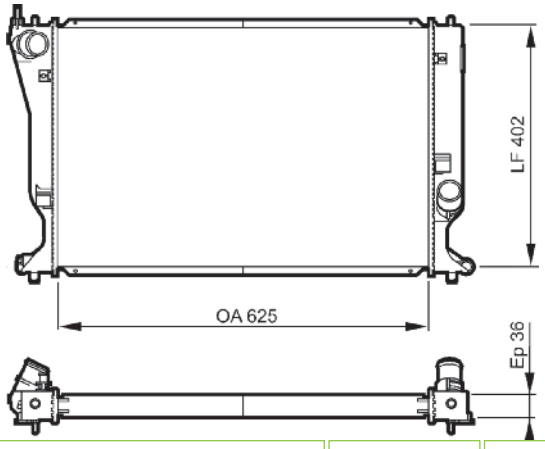


| | | |
|---|---|---|
| TOYOTA 164000R010 | 625x402x16 | 38mm L |
| | | 38mm L |

## 735576 ALB

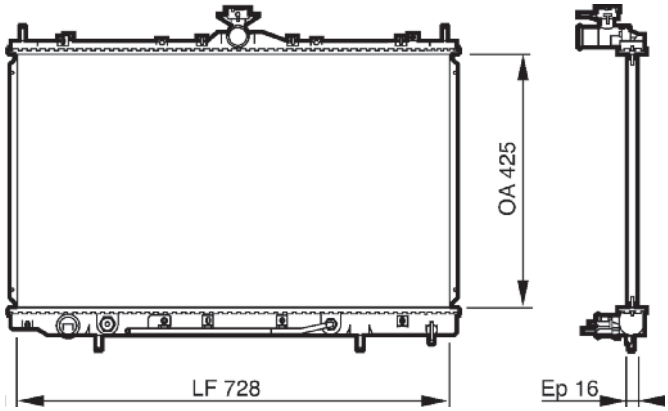


| | | |
|---|---|---|
| MITSUBISHI MN171217 | 425x728x16 | 35mm L |
| | | 35mm L |

## 735577 ALB

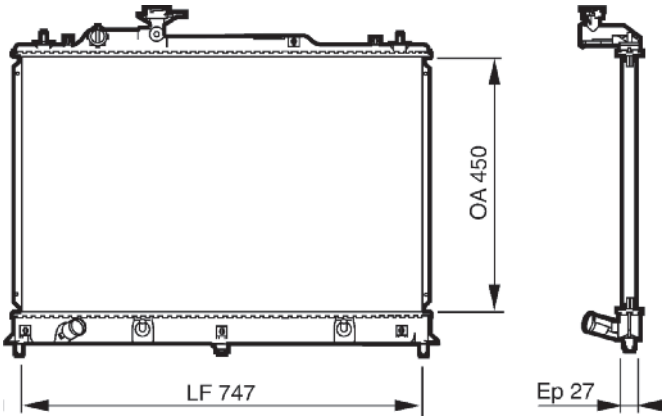


| | | |
|---|---|---|
| MAZDA L33L15200 | 747x450x27 | 31mm L |
| | + | 31mm L |

## 735583 CBS

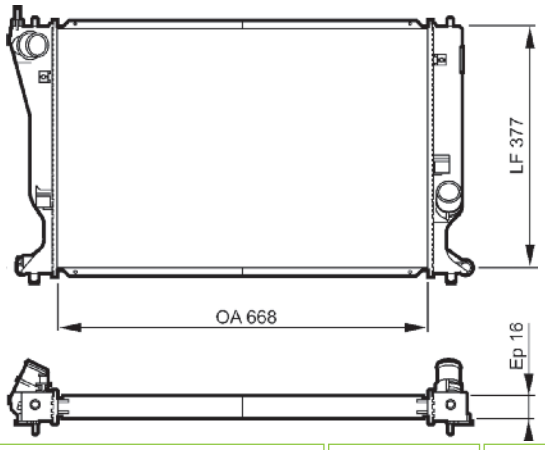


| | | |
|---|---|---|
| TOYOTA 1640070100 | 377x668x16 | 34mm L |
| | + | 34mm L |

## 735578 ALB

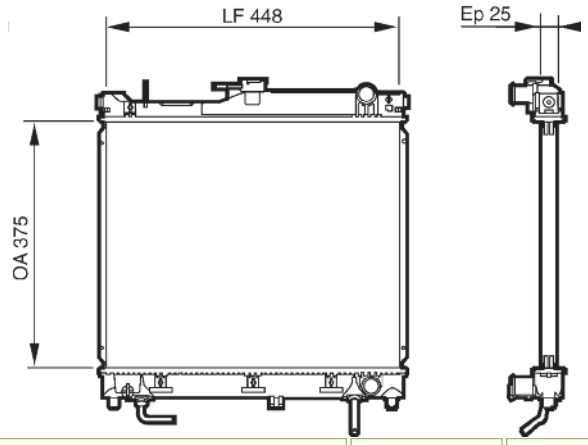


| | | |
|---|---|---|
| SUZUKI 1770080A10 | 375x448x25 | 28mm L |
| | + | 28mm L |

## 735586 ALB

Picture not available
Image non disponible
Imagen no disponible
Immagine non disponibile
Nicht verfügbares Bild
Brak zdjęcia
Картина недоступна

| | | |
|---|---|---|
| HYUNDAI 253101E001 | 375x648x16 | L |
| | - | L |

## 735580 ALB

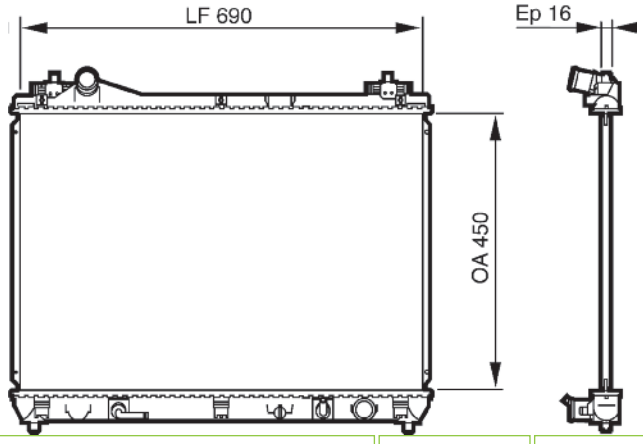


| | | |
|---|---|---|
| SUZUKI 1770066J10 | 450x690x16 | 34mm L |
| | + | 34mm L |

## 735589 ALB

Picture not available
Image non disponible
Imagen no disponible
Immagine non disponibile
Nicht verfügbares Bild
Brak zdjęcia
Картина недоступна

| | | |
|---|---|---|
| HYUNDAI 2531025810 | 360x468x16 | 33.5mm L |
| | - | 33.5mm L |

## 735593 ALB

Picture not available
Image non disponible
Imagen no disponible
Immagine non disponibile
Nicht verfügbares Bild
Brak zdjęcia
Картина недоступна

| | | |
|---|---|---|
| TOYOTA 164005B320 | 525x628x26 | 34mm L |
| | | 34mm L |

## 735600 RA1596 ALB

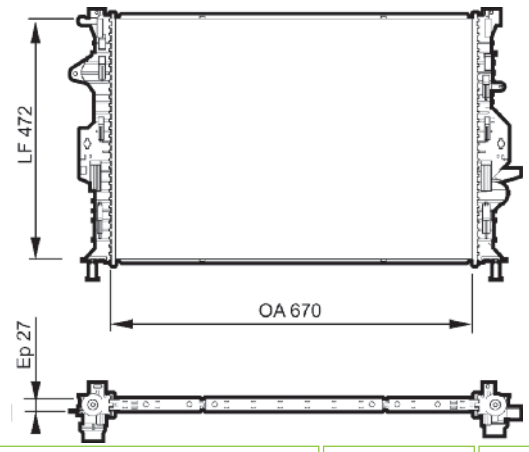


| | | |
|---|---|---|
| FORD 1377541<br>LAND ROVER LR006715 | 670x472x27 | |

## 735597 RA1573 ALB

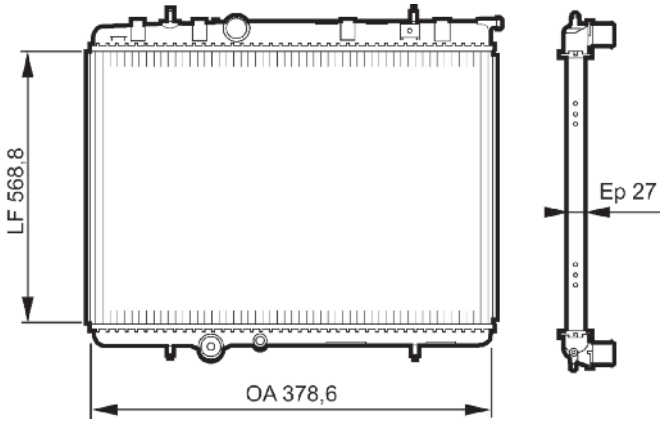


| | | |
|---|---|---|
| CITROEN 1330S7<br>PEUGEOT 1330S7 | 378,6x568,8x27 | |

## 735606 ALB

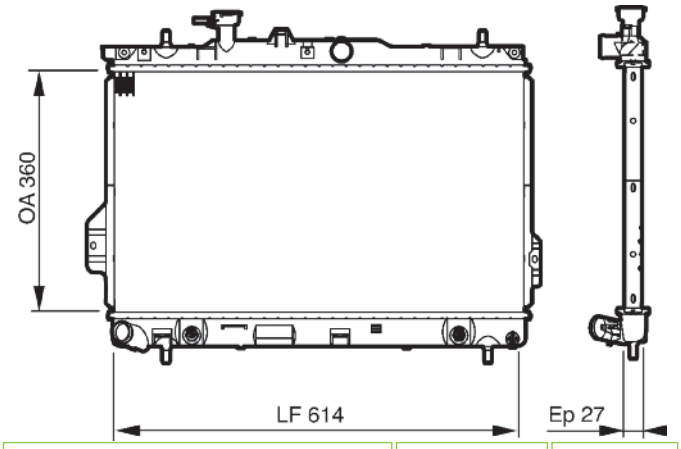


| | | |
|---|---|---|
| HYUNDAI 2531017100 | 614x360x27 | 34mm L |
| | | 34mm L |

## 735598 RA1574 ALB

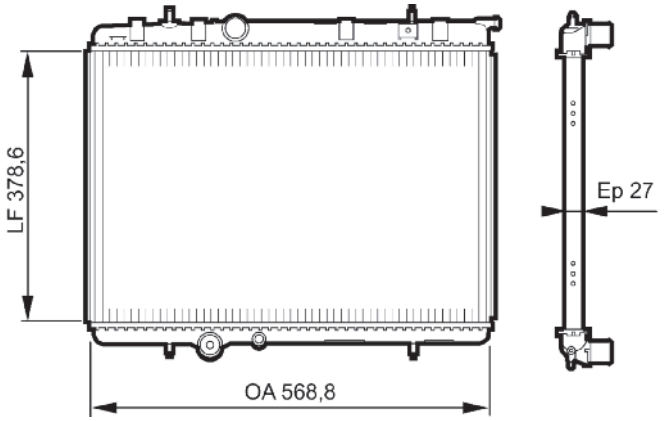


| | | |
|---|---|---|
| CITROEN 1330T5<br>PEUGEOT 1330T5 | 378,6x568,8x27 | |

## 735607 RM2062 ALM

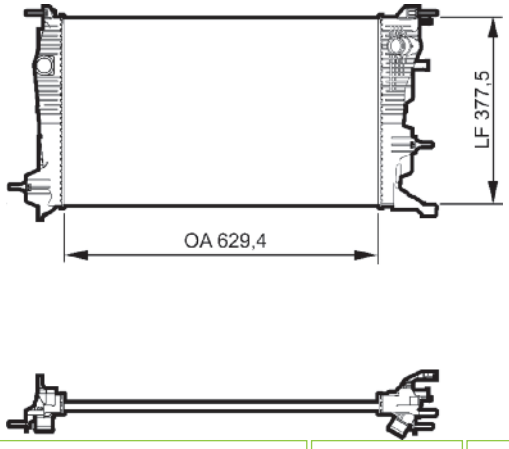


| | | |
|---|---|---|
| RENAULT 214100002R | 629,4x377,5 | |

## 735608 RM2047 ALB

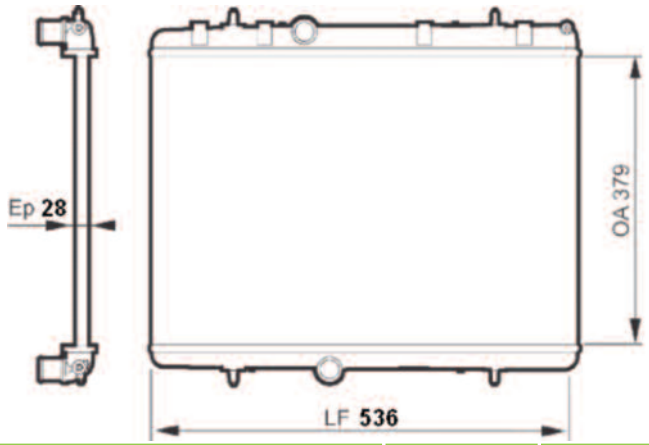


| | | | |
|---|---|---|---|
| CITROEN | 1330P9 | 378x536x28 | |
| PEUGEOT | 1330J7 | | |

## 810835 RA351 ALB

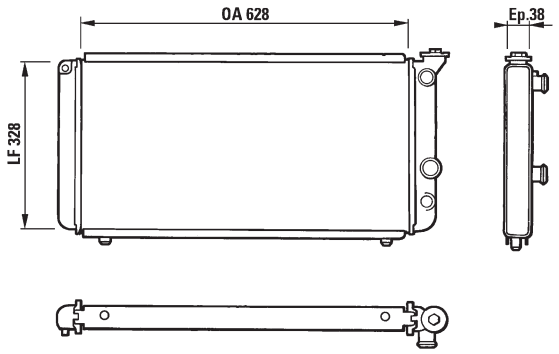


| | | | |
|---|---|---|---|
| RENAULT | 7700736827 | 640x328x34,5 | 32mm L |
| | | | 32mm L |

## 736083 RM1045 ALM

Picture not available
Image non disponible
Imagen no disponible
Immagine non disponibile
Nicht verfügbares Bild
Brak zdjęcia
Картина недоступна

| | | | |
|---|---|---|---|
| SEAT | 1J0121253G | 430x414x23 | 32mm QC |
| SKODA | 1J0121253G | | |
| VOLKSWAGEN | 1J0121253G | | 32mm QC |

## 810836 RA552 ALB

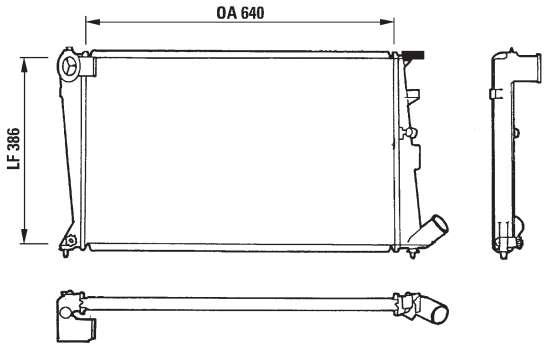


| | | | |
|---|---|---|---|
| CITROEN | 1301E5 | 640x386x26, 5 | 40mm L |
| PEUGEOT | 1301E5 | | |
| | | | 40mm L |

## 810827 CBS

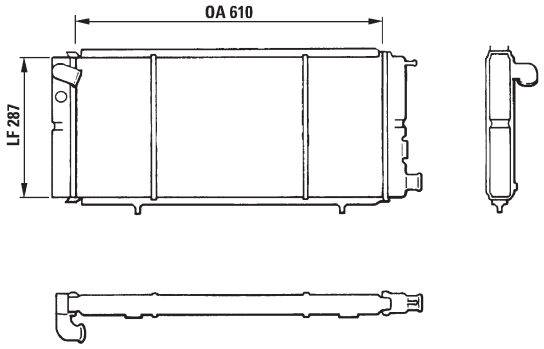


| | | | |
|---|---|---|---|
| PEUGEOT | 1300K5 | 610x287x35 | 32mm L |
| | | | 32mm L |

## 810843 RA487 ALB

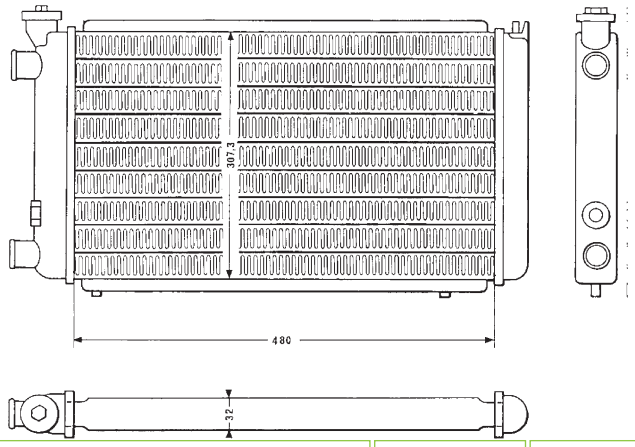


| | | | |
|---|---|---|---|
| RENAULT | 7700657109 | 480x307x32 | 32mm L |
| | | | 32mm L |

## 810851 RA439 ALB

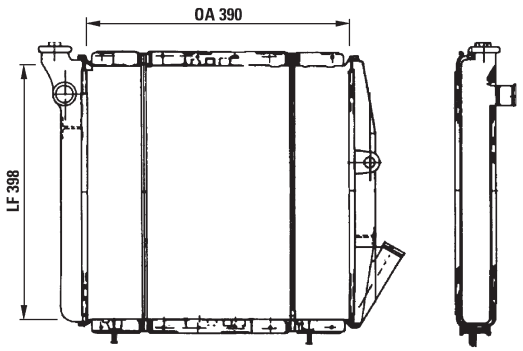


| | | |
|---|---|---|
| RENAUL 7700773700 | 390x397,5x32 | 32mm L |
| | | 32mm L |

## 810887 RA595 ALB

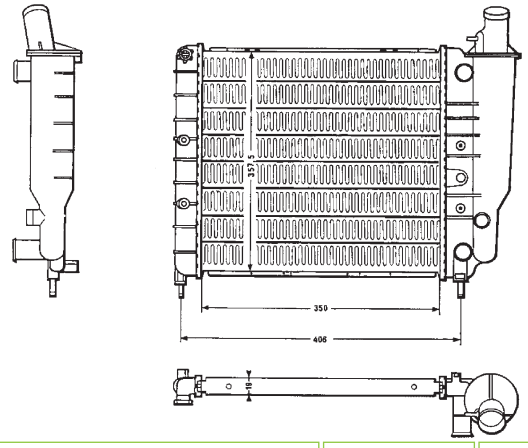


| | | |
|---|---|---|
| RENAUL 7700773288 | 350x358x19 | 32mm L |
| | | 32mm L |

## 810881 CBS

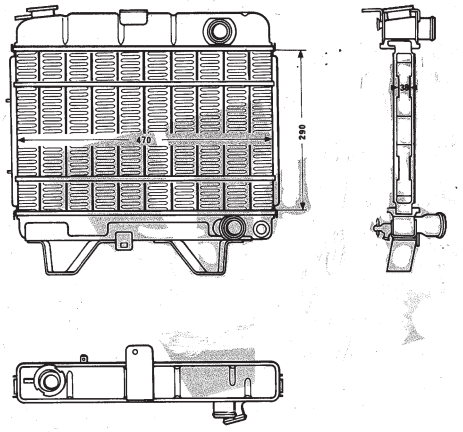


| | | |
|---|---|---|
| PEUGEOT 1300B0 | 290x463x39 | 40mm L |
| | | 40mm L |

## 810888 RA596 ALB

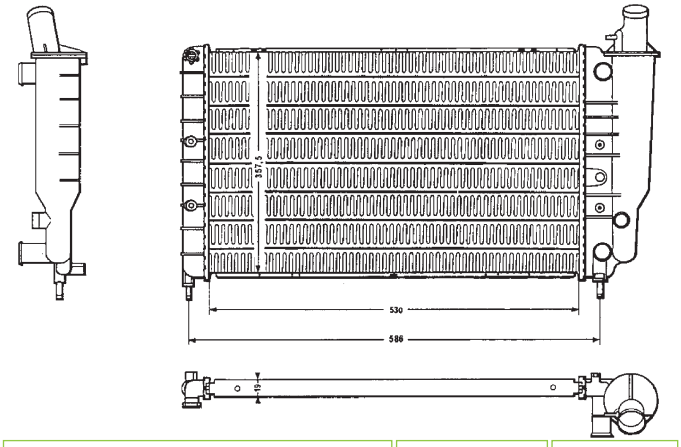


| | | |
|---|---|---|
| RENAUL 7700778034 | 530x358x19 | 32mm L |
| | | 32mm L |

## 810882 RA264 ALB

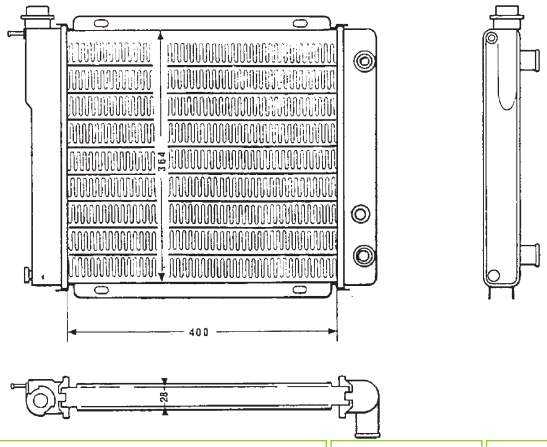


| | | |
|---|---|---|
| PEUGEOT 1331E0 | 390x364x28 | 32mm L |
| | | 32mm L |

## 810889 RA352 ALB

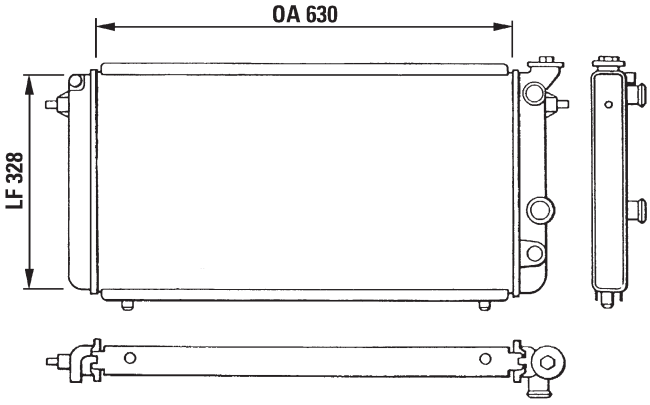


| | | |
|---|---|---|
| RENAUL 7700757853 | 630x328x38 | 32mm L |
| | | 32mm L |

## 810892 RM1155 ALM

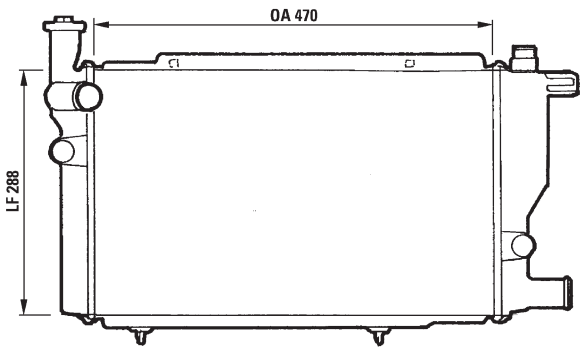


| | | |
|---|---|---|
| PEUGEOT PSARAR001 | 480x285x34 | 32mm L |
| - | | 32mm L |

## 810919 RA493 ALB

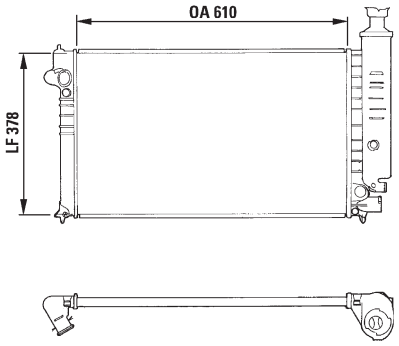


| | | |
|---|---|---|
| PEUGEOT 1300N6 | 610x355x19 | 32mm L |
| - | | 32mm L |

## 810912 RA571 ALB

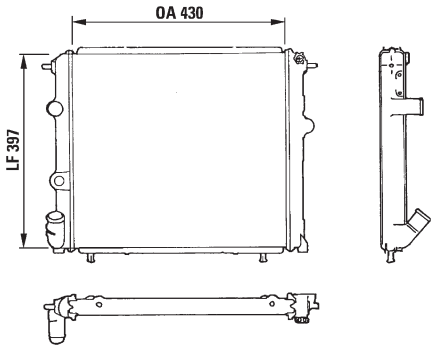


| | | |
|---|---|---|
| RENAULT 7700784039 | 430x397x35 | 32mm L |
| - | | 32mm L |

## 810924 RA602 ALB

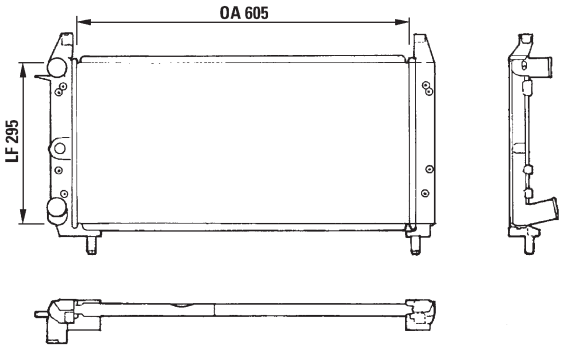


| | | |
|---|---|---|
| FIAT 46519780 | 605x295x19 | L |
| - | | L |

## 810915 RM1104 ALM

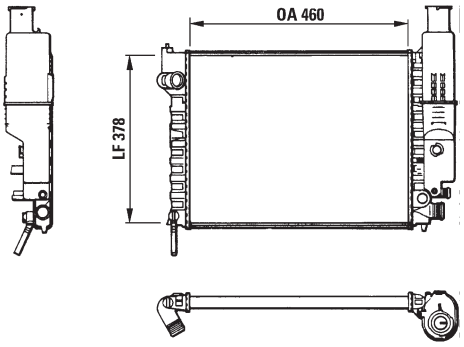


| | | |
|---|---|---|
| PEUGEOT 1300N4 | 460x377,5x23 | 32mm L |
| - | | 32mm L |

## 810926 RA255 ALB

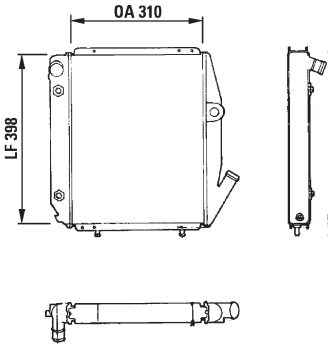


| | | |
|---|---|---|
| RENAULT 6001009077 | 308x397,5x34,5 | 32mm L |
| + | | 32mm L |

## 810933 RA194 ALB

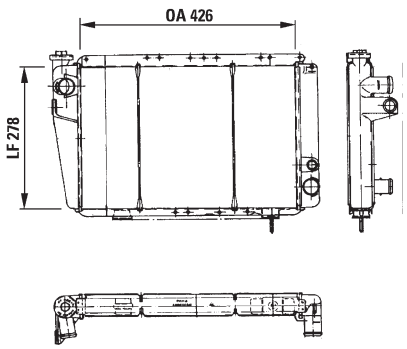


| | | |
|---|---|---|
| RENAUTH 7700704654 | 432x270x16 | L |
| | | L |

## 810955 RA814 ALB

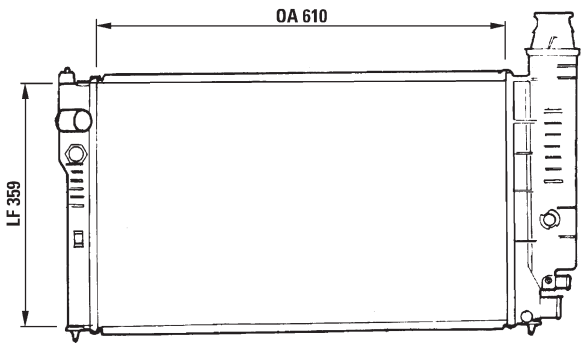


| | | |
|---|---|---|
| PEUGEOT 1300N5 | 610x359x43 | 32mm L |
| | | 32mm L |

## 810938 RA597 ALB

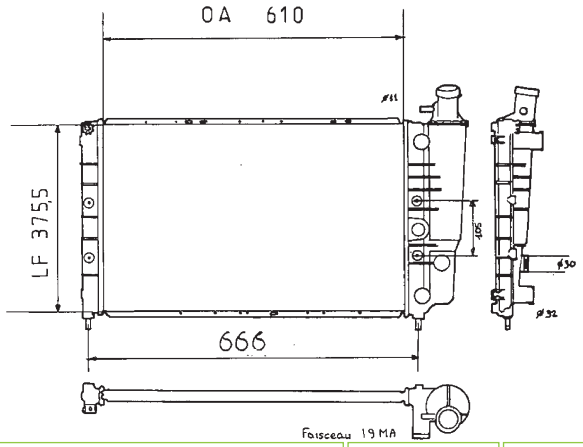


| | | |
|---|---|---|
| RENAULT 7700773289 | 610x358x19 | 32mm L |
| | | 32mm L |

## 810956 CBS

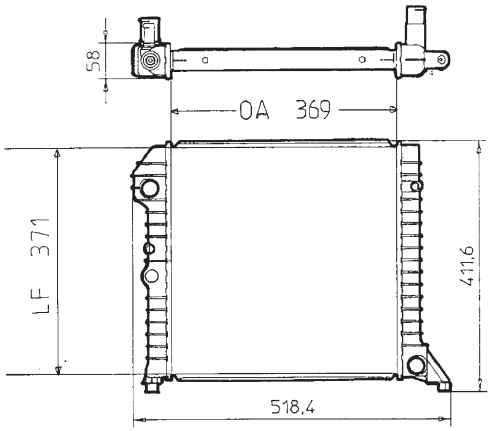


| | | |
|---|---|---|
| VOLVO 90311622 | 369x371x21 | 32mm L |
| | | 32mm L |

## 810949 RM2018 ALM

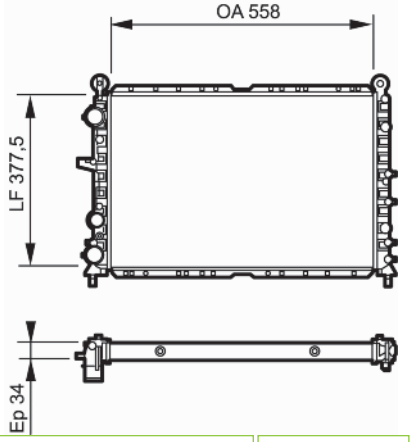


| | | |
|---|---|---|
| FIAT 7610803<br>LANCIA 71735353 | 554x374,2x35 | 35mm L |
| | | 35mm L |

## 810957 CBS

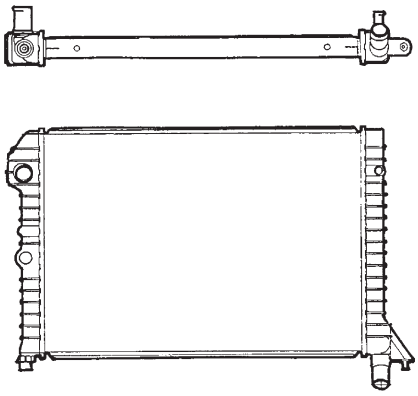

| | | |
|---|---|---|
| VOLVO 90311630 | 535x368x21 | 32mm L |
| | | 32mm L |

## 810965 RA1457

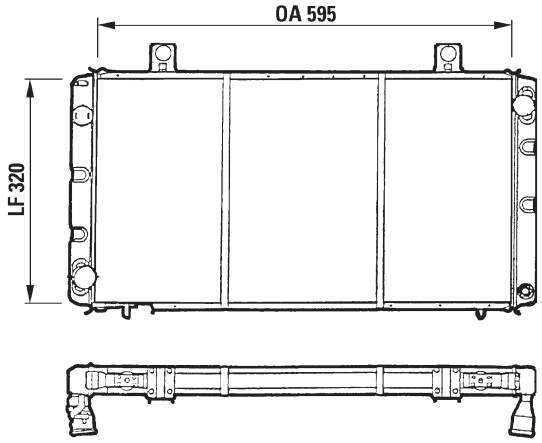


| | | |
|---|---|---|
| SAAB 7549298 | 595x320 | 32mm L |
| | - | 32mm L |

## 810971 CBS

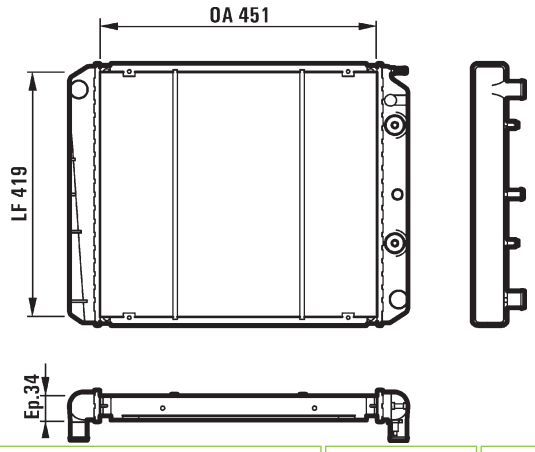


| | | |
|---|---|---|
| VOLVO 86011251 | 468x420x34 | 32mm L |
| | + | 32mm L |

## 810968 CBS

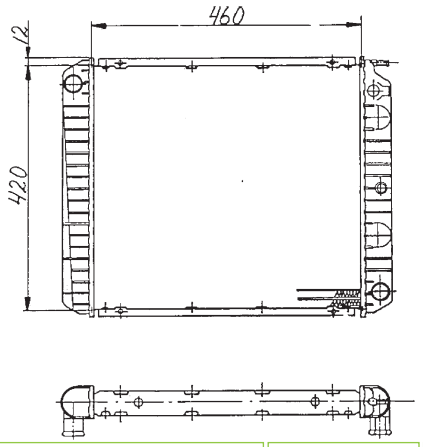


| | | |
|---|---|---|
| VOLVO 86011244 | 468x420x34 | 32mm L |
| | - | 32mm L |

## 810995 RA612 ALB

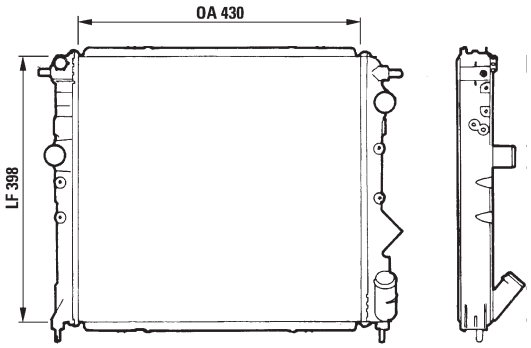


| | | |
|---|---|---|
| RENAULT 7700803753 | 430x398x34, 5 | L |
| | - | L |

## 810970 CBS

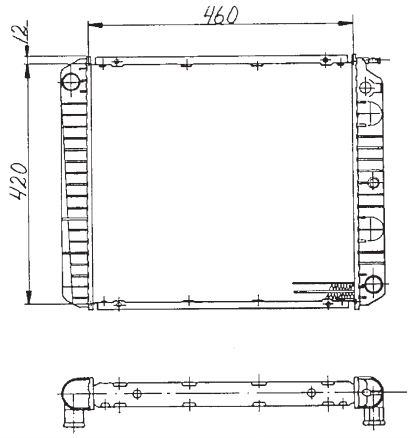


| | | |
|---|---|---|
| VOLVO 86011269 | 468x420x34 | 33mm L |
| | - | 33mm L |

## 811010 TA440 ALM

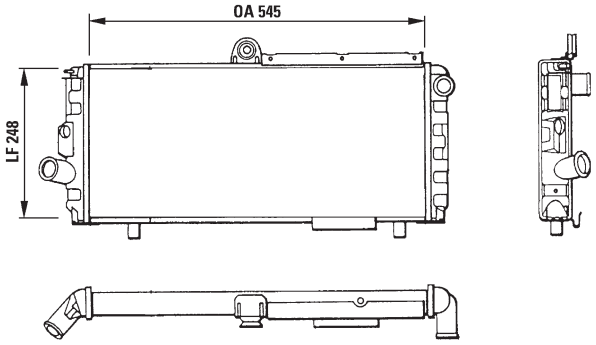


| | | |
|---|---|---|
| ALFA ROMEO 0060504387 | 545x248x34 | 32mm L |
| | - | 32mm L |

## 811046 CBS

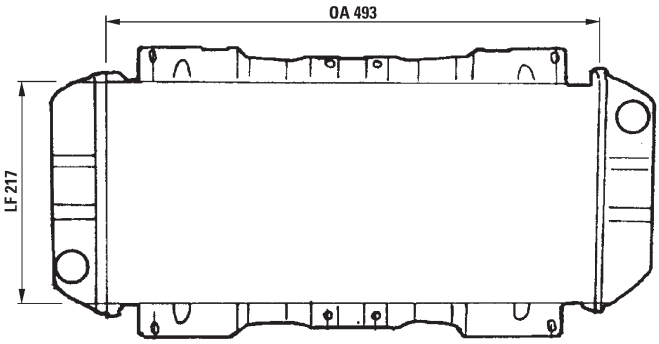


| | | |
|---|---|---|
| FORD 6138599 | 493x217x22 | 32mm L |
| | | 32mm L |

## 811068 TA549 ALM

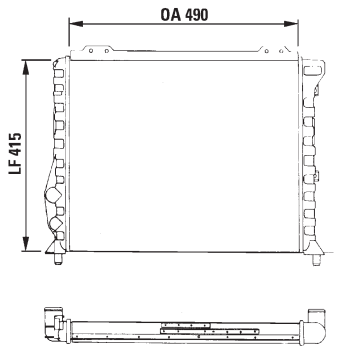


| | | |
|---|---|---|
| ALFA ROMEO 0060507820 | 490x415x34 | 38mm L |
| | | 38mm L |

## 811047 CBS

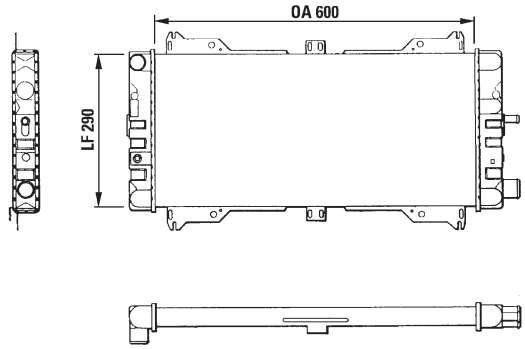


| | | |
|---|---|---|
| FORD 6138600 | 600x290x34 | 32mm L |
| | | 32mm L |

## 811069 TA738 ALM

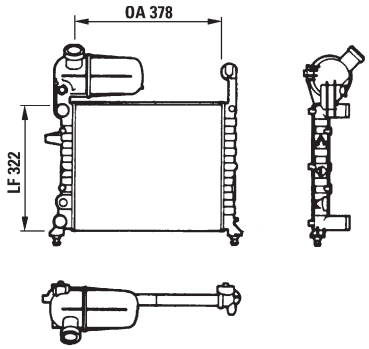


| | | |
|---|---|---|
| FIAT 7739073 | 378x322x23 | 35mm L |
| | | 35mm L |

## 811056 TA449 ALM

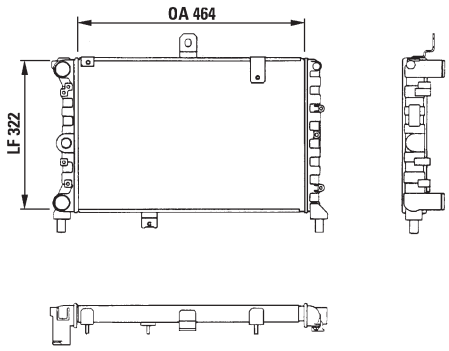


| | | |
|---|---|---|
| LANCIA 82429172 | 464x322x34 | 35.5mm L |
| | | 35.5mm L |

## 811070 TA739 ALM

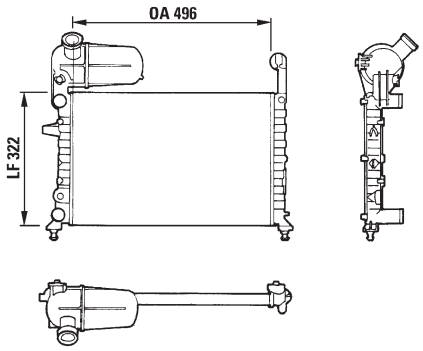


| | | |
|---|---|---|
| FIAT 7732873<br>LANCIA 7732873 | 496x322x23 | 35mm L |
| | | 35mm L |

## 811071 RM177 ALM

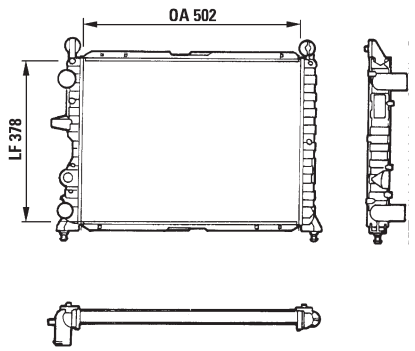


| | | | |
|---|---|---|---|
| ALFA ROMEO | 0060806046 | 502x377,5x34 | 35mm L |
| ALFA ROMEO | 0060806046 | | |
| FIAT | 7775153 | | |
| FIAT | 7775153 | | |
| LANCIA | 46517134 | | |
| LANCIA | 46517134 | | 35mm L |

## 811380 RM2008 ALM

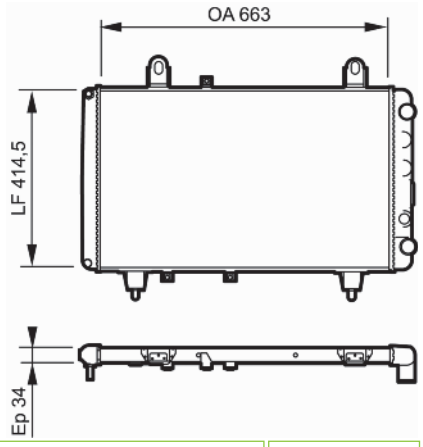


| | | | |
|---|---|---|---|
| CITROEN | 1300G0 | 663x414x42 | 38mm L |
| FIAT | 7555802 | | |
| PEUGEOT | 1300G0 | | |
| | | | 38mm L |

## 811073 RM176 ALM

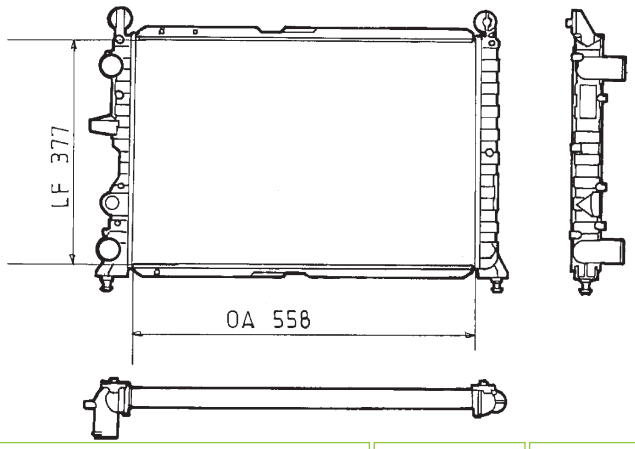


| | | | |
|---|---|---|---|
| FIAT | 7766965 | 558x377,5x34 | 35mm L |
| FIAT | 7766965 | | |
| LANCIA | 71736501 | | |
| LANCIA | 71736501 | | 35mm L |

## 811381 TA443 ALM

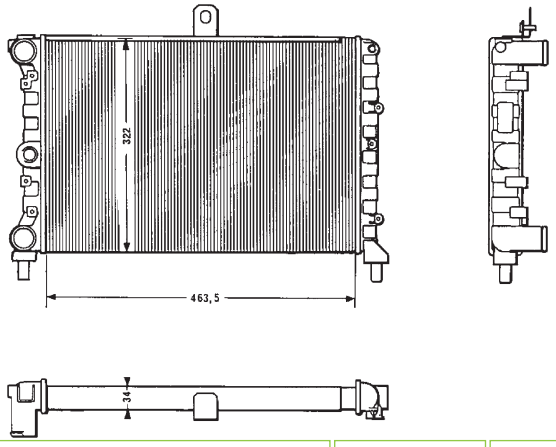


| | | | |
|---|---|---|---|
| LANCIA | 82416664 | 463x322x34 | 35mm L |
| | | | 35mm L |

## 811348 ALM

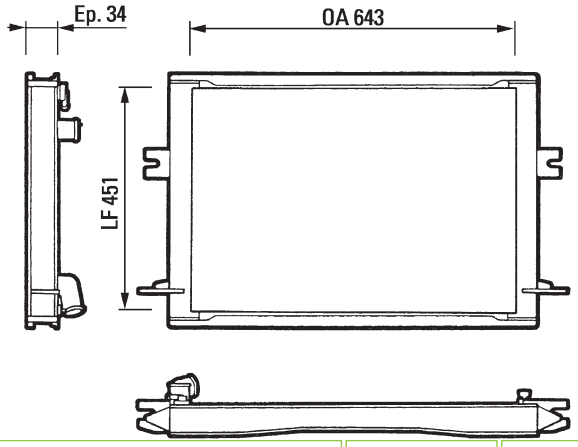


| | | | |
|---|---|---|---|
| IVECO | 93807662 | 643x451x34 | 38mm L |
| | | | 38mm L |

## 811385 TA746 ALM

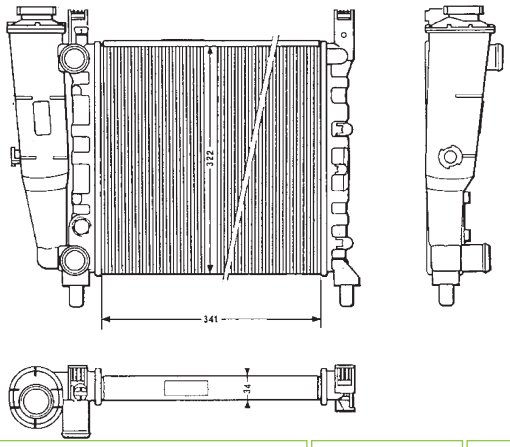


| | | | |
|---|---|---|---|
| FIAT | 7739941 | 341x322x34 | L |
| | | | L |

## 811387 RA639 ALB

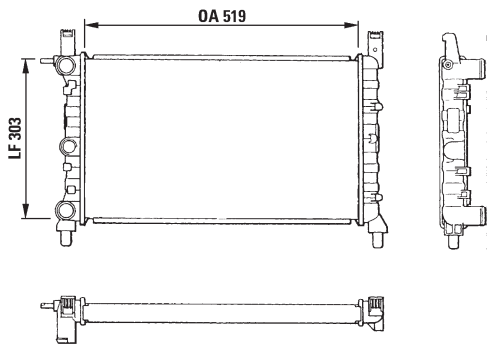


| | | |
|---|---|---|
| FIAT 50005580<br>INNOCENTI 50005580 | 519x307x35 | 35mm L |
| | | 35mm L |

## 812235 F664447A

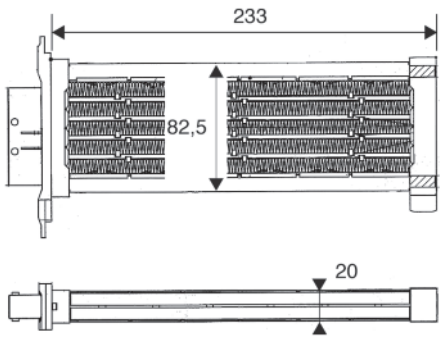


| | | |
|---|---|---|
| CITROEN 6445PT<br>PEUGEOT 6445PT<br>RENAULT 7701207715 | 233x82x10 | |
| | | |

## 811389 TA438 ALM

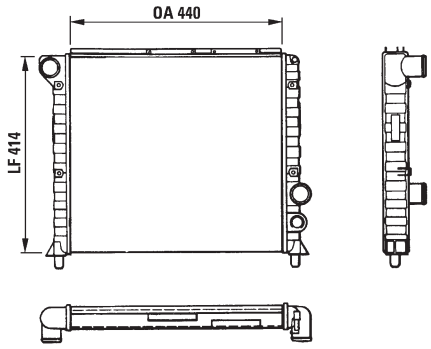


| | | |
|---|---|---|
| ALFA ROMEO 60526047 | 440x414x34 | 38mm L |
| | | 38mm L |

## 812249 F667213K

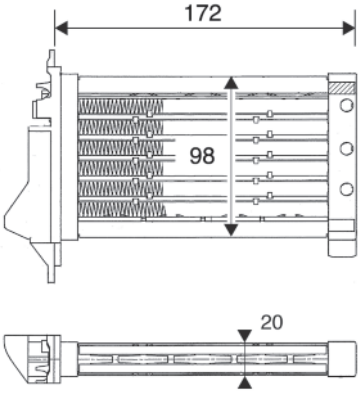


| | | |
|---|---|---|
| NISSAN 27143AX00 | 172x98 | |
| | | |

## 811392 RM179 ALM

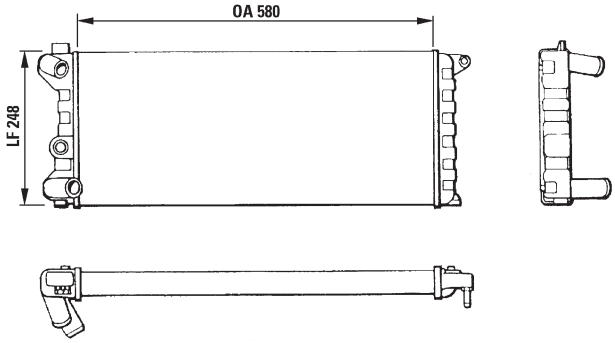


| | | |
|---|---|---|
| AUTOBIANCHI 46551216<br>FIAT 46551216<br>LANCIA 46551216 | 580x248x34 | L |
| | | L |

## 812309 667210T0

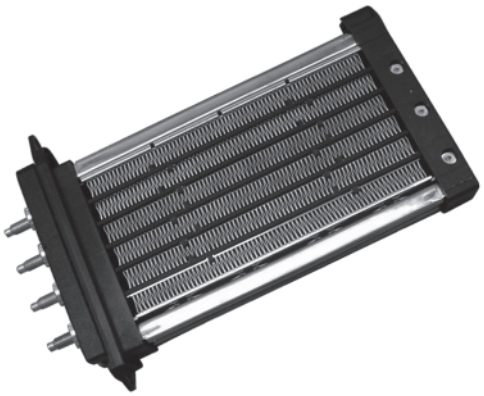

| | | |
|---|---|---|
| RENAULT 7701060003 | 146x97x24 | |
| | | |

## 814000 ALM

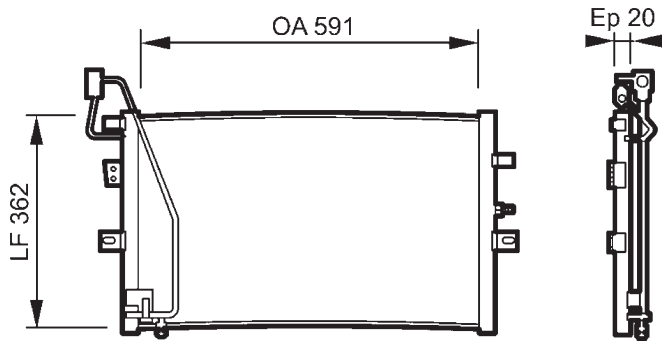


| | | |
|---|---|---|
| SAAB 5048350 | 586x358x20 | |

## 814004 ALB

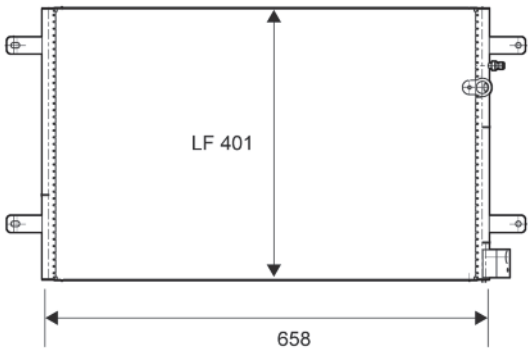


| | | |
|---|---|---|
| AUDI 4F0260403E | 658x401x16 | |

## 814002 ALB

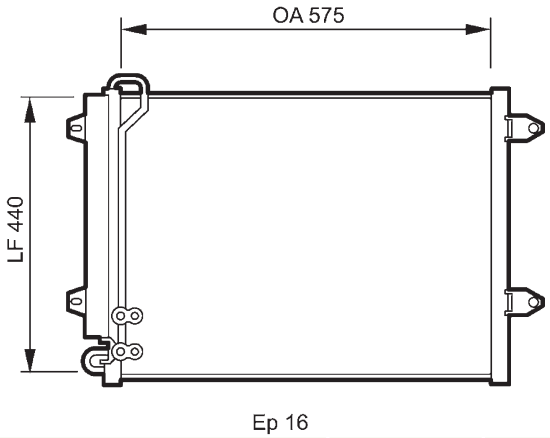


| | | |
|---|---|---|
| VOLKSWAGEN 3C0820411C | 614x441x16 | |

## 814006 ALB

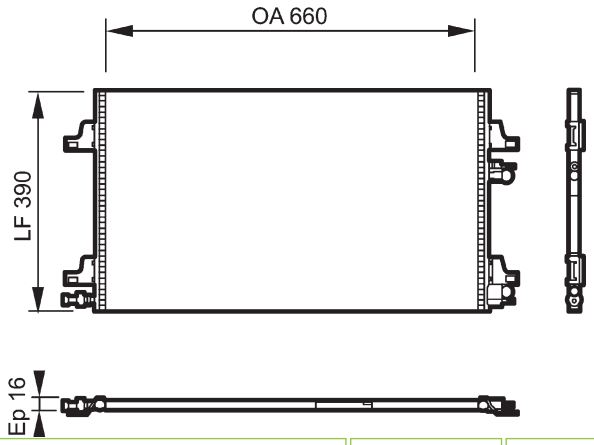


| | | |
|---|---|---|
| RENAULT 8200332852 | 660x390x16 | |

## 814003 CA1495 ALM

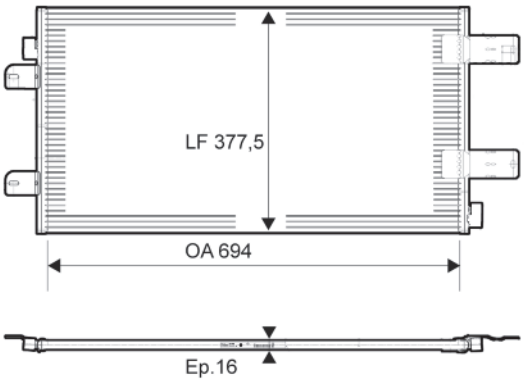


| | | |
|---|---|---|
| RENAULT 7701066110 | 694x377 | |

## 814007 ALB

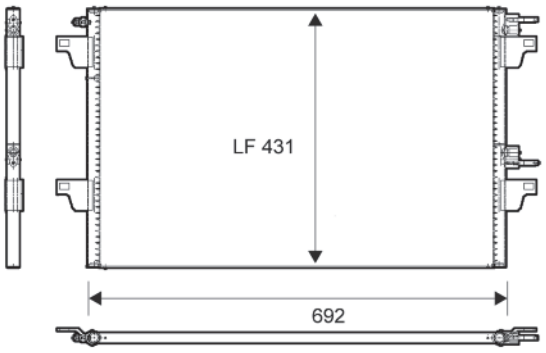


| | | |
|---|---|---|
| RENAULT 8200332851 | 698x431x16 | |

## 814008 ALM

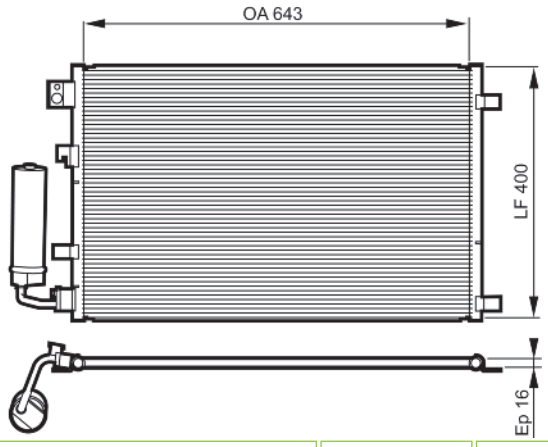


| | | |
|---|---|---|
| NISSAN 92100JD200 | 643x400x16 | |

## 814011 ALM

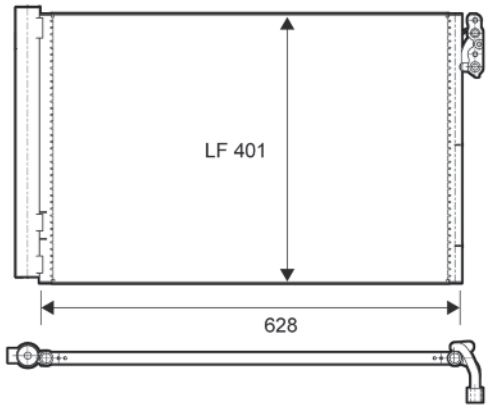


| | | |
|---|---|---|
| BMW 64509169772 | 628x401x16 | |

## 814009 ALM

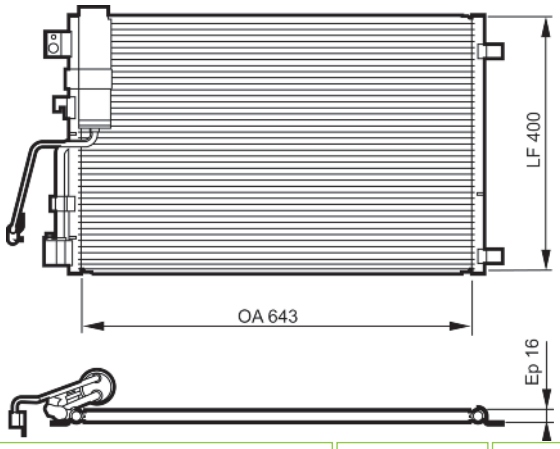


| | | |
|---|---|---|
| NISSAN 92100JD500 | 643x400x16 | |

## 814012 ALM

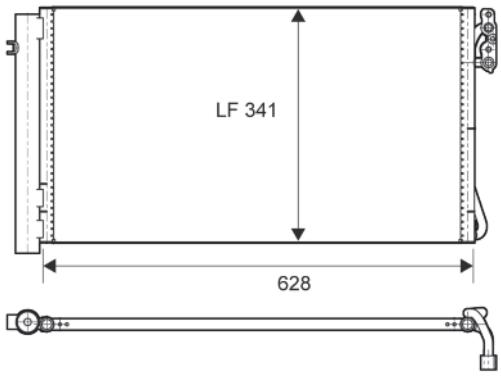


| | | |
|---|---|---|
| BMW 64539169526 | 628x341x16 | |

## 814010 ALM

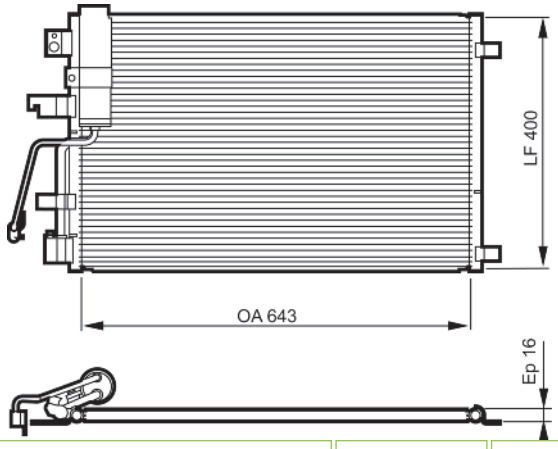


| | | |
|---|---|---|
| NISSAN 92100JD700 | 643x400x16 | |

## 814051 CA1538 ALM

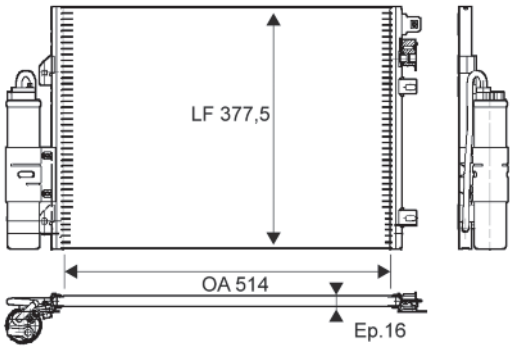


| | | |
|---|---|---|
| DACIA 6001550660<br>DACIA 8200513983 | 514x377x16 | |

## 814061 CA1469 ALM

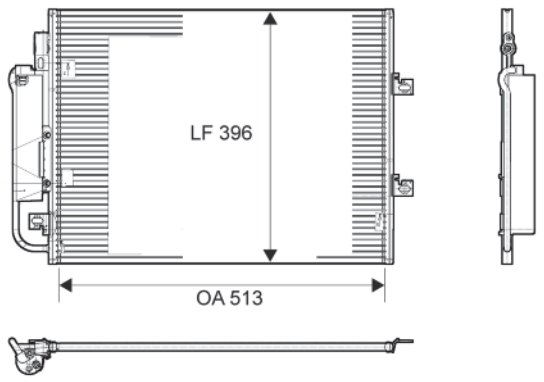


| | | |
|---|---|---|
| RENAULT 8200448252 | 513x396x12 | |

## 814069 ALM

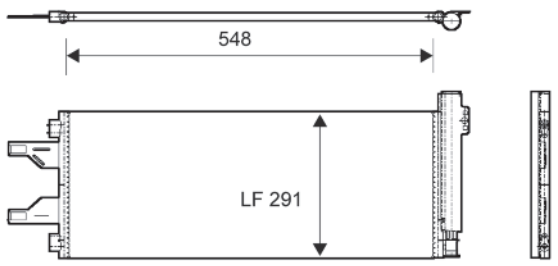


| | | |
|---|---|---|
| CITROEN 6455EP | 748x291 | |

## 814065 CA1505 ALM

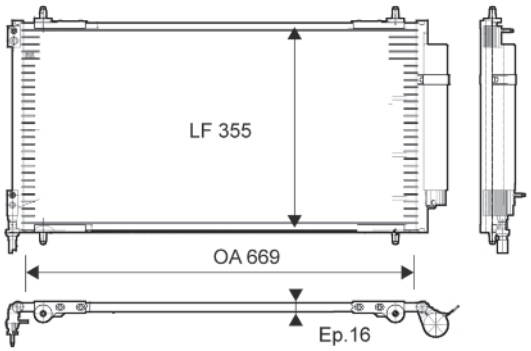


| | | |
|---|---|---|
| CITROEN 6455FW | 678x355 | |

## 814077 CA1556

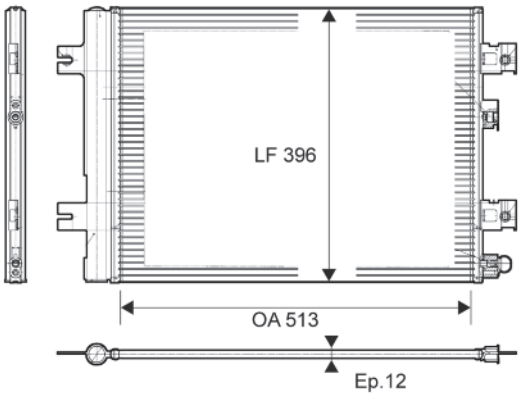


| | | |
|---|---|---|
| DACIA 8200741257 | 513x396x12 | |

## 814066 ALM

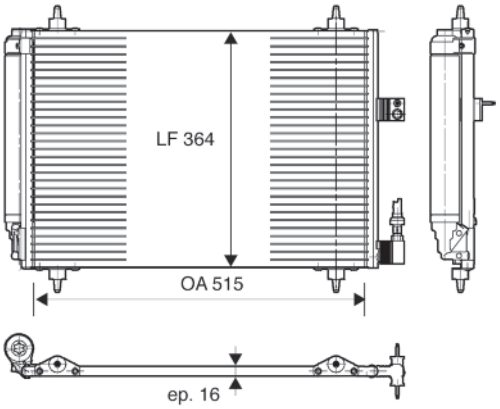


| | | |
|---|---|---|
| OPEL 1850114 | 545x380x16 | |

## 814080 ALM

Picture not available
Image non disponible
Imagen no disponible
Immagine non disponibile
Nicht verfügbares Bild
Brak zdjęcia
Картина недоступна

| | | |
|---|---|---|
| CITROEN 6455CN | 520x363 | |

## 814081 ALM

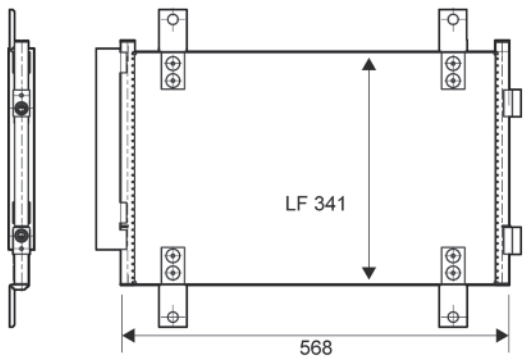


| | | |
|---|---|---|
| CITROEN 6455EC | 568x341x16 | |

## 814087 ALM

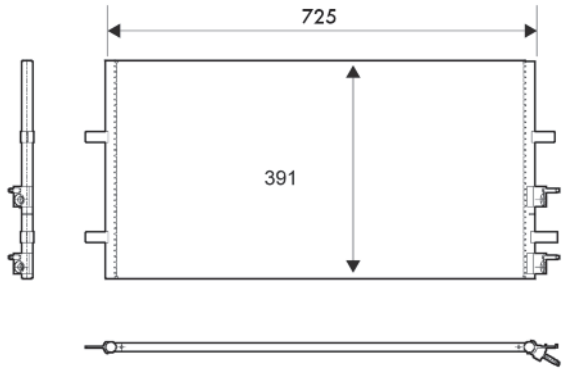


| | | |
|---|---|---|
| FORD 1383318 | 568x391x16 | |

## 814083 ALM

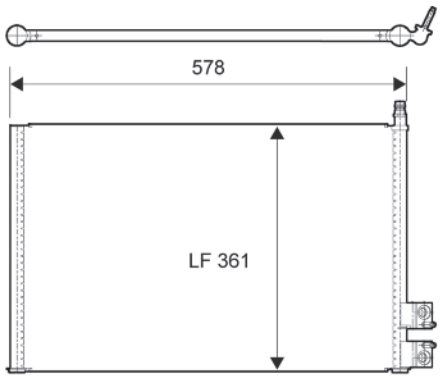


| | | |
|---|---|---|
| FORD 1384859 | 578x361x16 | |

## 814090 CA2018 ALM

Picture not available
Image non disponible
Imagen no disponible
Immagine non disponibile
Nicht verfügbares Bild
Brak zdjęcia
Картина недоступна

| | | |
|---|---|---|
| CITROEN 6455GY | 539x361 | |

## 814085 ALM

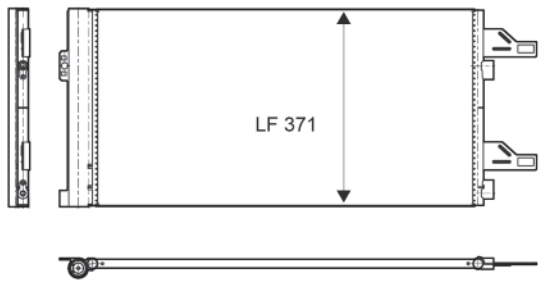


| | | |
|---|---|---|
| CITROEN 6455EQ | 710x375 | |

## 814094 CA1506 ALM

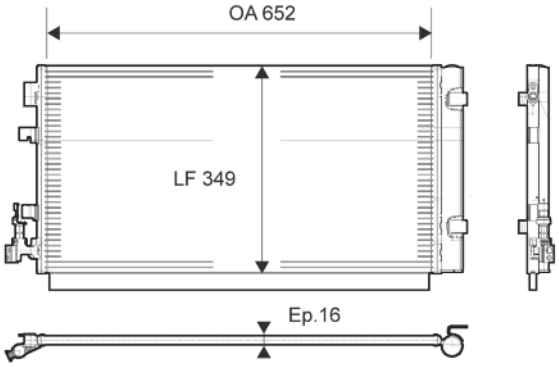


| | | |
|---|---|---|
| RENAULT 921100001R | 652x350 | |

## 814095 ALM

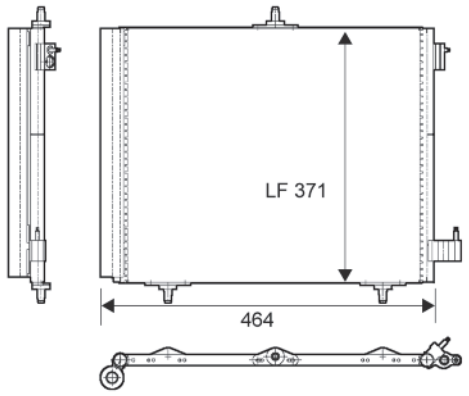


| | | | |
|---|---|---|---|
| CITROEN | 6455ET | 464x371x16 | |

## 814158 ALM

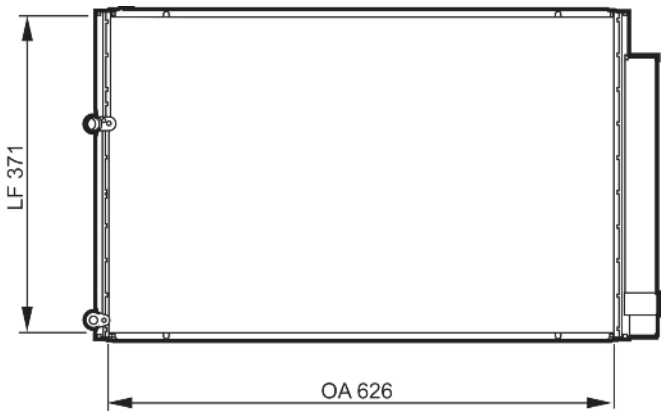


| | | | |
|---|---|---|---|
| TOYOTA | 8845047020 | 565x340x16 | |

## 814113 CA2004 ALB

Picture not available
Image non disponible
Imagen no disponible
Immagine non disponibile
Nicht verfügbares Bild
Brak zdjęcia
Картина недоступна

| | | | |
|---|---|---|---|
| BMW | 64539219843 | | |

## 814159 ALM

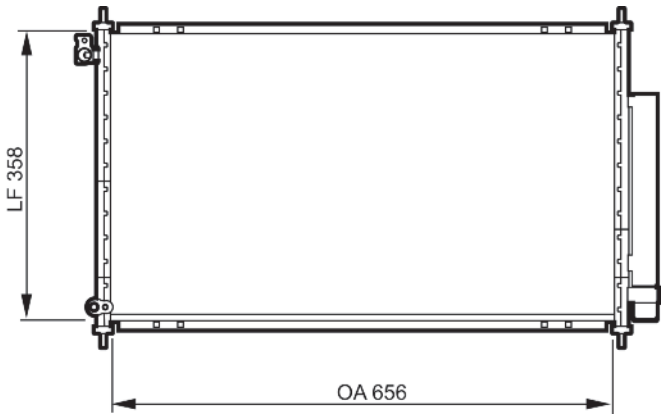


| | | | |
|---|---|---|---|
| HONDA | 80101SEFE11 | 656x358 | |

## 814155

Picture not available
Image non disponible
Imagen no disponible
Immagine non disponibile
Nicht verfügbares Bild
Brak zdjęcia
Картина недоступна

| | | | |
|---|---|---|---|
| FIAT | 51786211 | 510x370 | |

## 814165

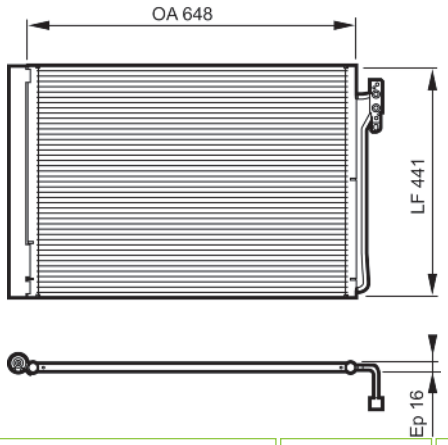


| | | | |
|---|---|---|---|
| LAND ROVER | JRW000020 | 648x441x16 | |

## 814167

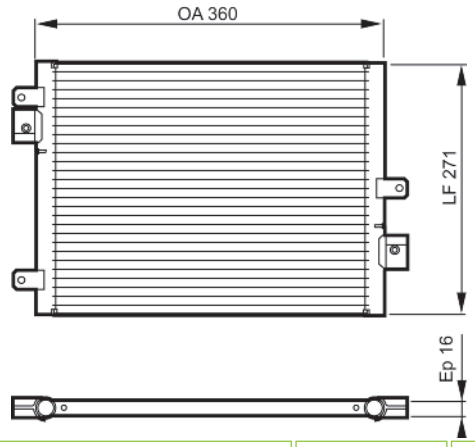


| | | |
|---|---|---|
| PORSCHE 99657311103 | 360x271x16 | |

## 814173 CA1521 ALB

Picture not available
Image non disponible
Imagen no disponible
Immagine non disponibile
Nicht verfügbares Bild
Brak zdjęcia
Картина недоступна

| | | |
|---|---|---|
| CITROEN 6455GZ | | |

## 814171 CA1498 ALM

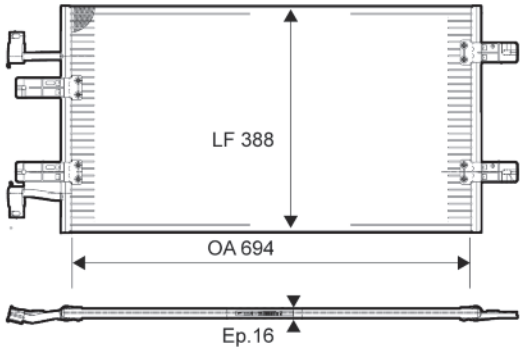


| | | |
|---|---|---|
| RENAULT 8200774211 | | |

## 814178 ALM

Picture not available
Image non disponible
Imagen no disponible
Immagine non disponibile
Nicht verfügbares Bild
Brak zdjęcia
Картина недоступна

| | | |
|---|---|---|
| DACIA 8200880551 | 621x322 | |

## 814172 CA2016 ALM

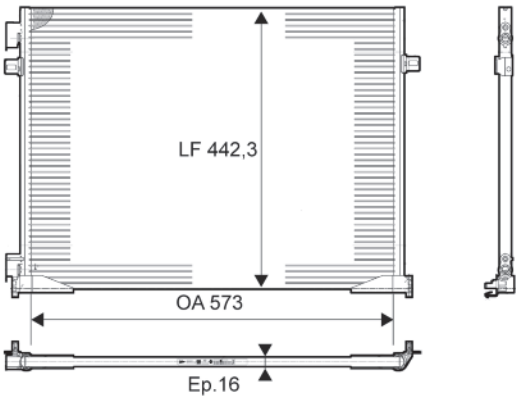


| | | |
|---|---|---|
| RENAULT 8200465490 | 545x440 | |

## 814179 CA2038 ALB

Picture not available
Image non disponible
Imagen no disponible
Immagine non disponibile
Nicht verfügbares Bild
Brak zdjęcia
Картина недоступна

| | | |
|---|---|---|
| RENAULT 921005824R | 760x350x16 | |

## 814184 CA1539 ALM

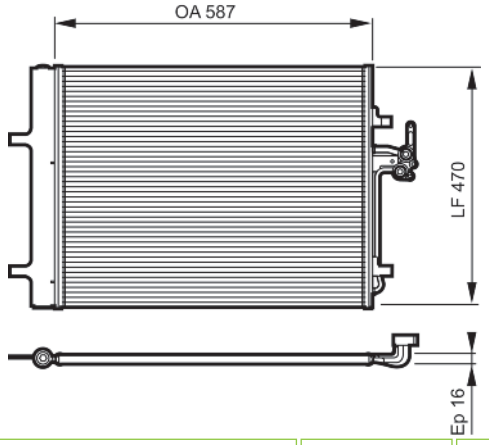


| | | |
|---|---|---|
| FORD 1437112 | 587x470x16 | |

## 814187 ALM

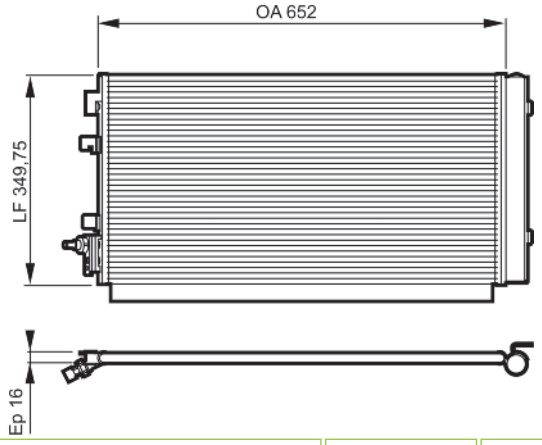


| | | |
|---|---|---|
| RENAULT 921000294R | 652x349,75 | |

## 814185 CA1555 ALM

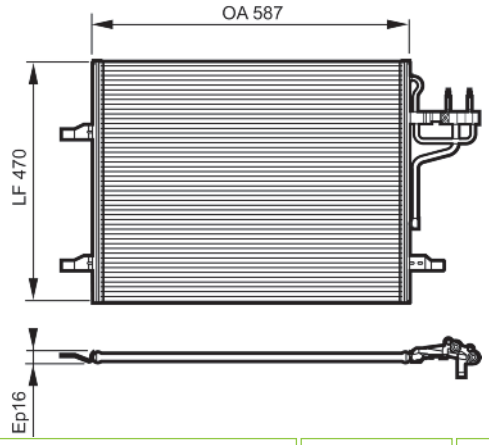


| | | |
|---|---|---|
| FORD 1522067 | 587x470x16 | |

## 814188 ALM

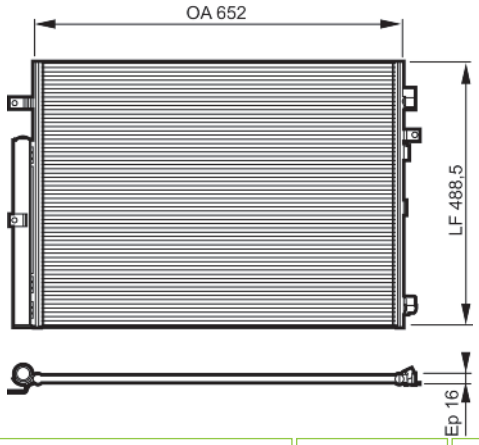


| | | |
|---|---|---|
| RENAULT 921001367R | 652x488,5 | |

## 814186

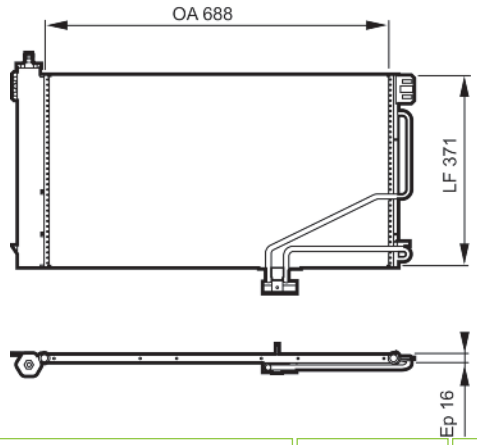


| | | |
|---|---|---|
| MERCEDES 1715000154 | 668x371x16 | |

## 814189 ALM

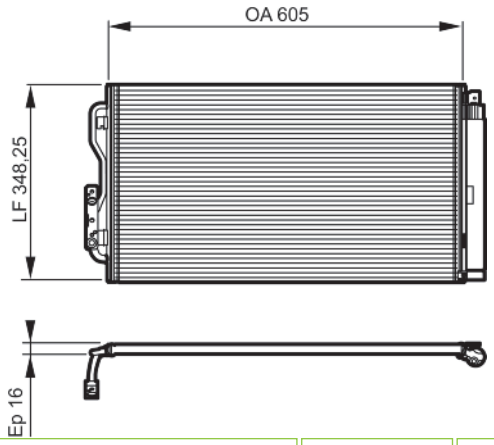


| | | |
|---|---|---|
| BMW 64539218121 | 605x348,25 | |

## 814190 ALM

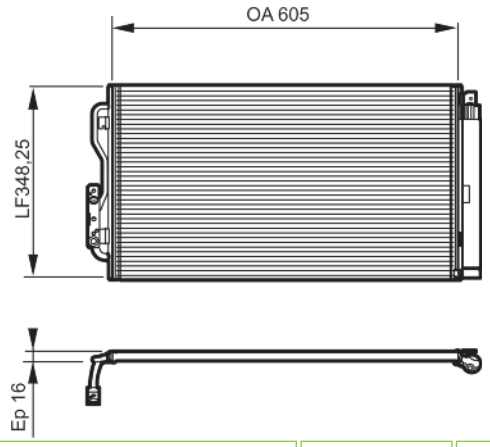


| | | | |
|---|---|---|---|
| BMW | 64539218122 | 605x348,25 | |

## 814197 ALM

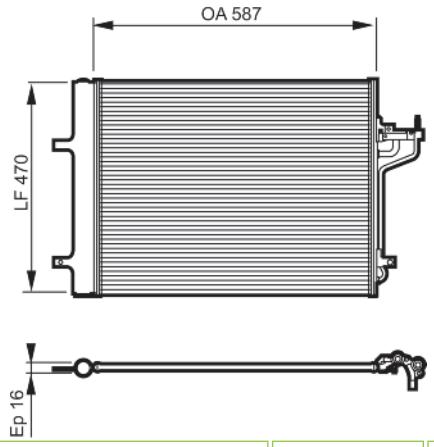


| | | | |
|---|---|---|---|
| FORD | 8V6119710FA | 587x470 | |

## 814191 ALM

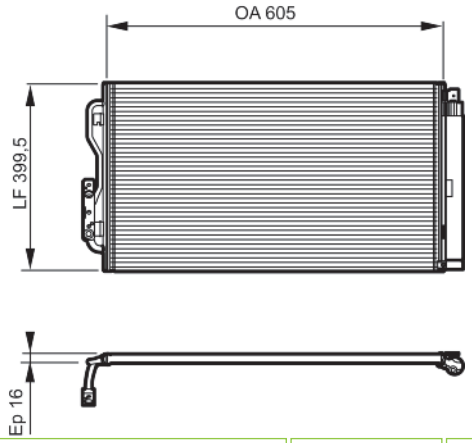


| | | | |
|---|---|---|---|
| BMW | 64539218123 | 605x399,5 | |

## 814198

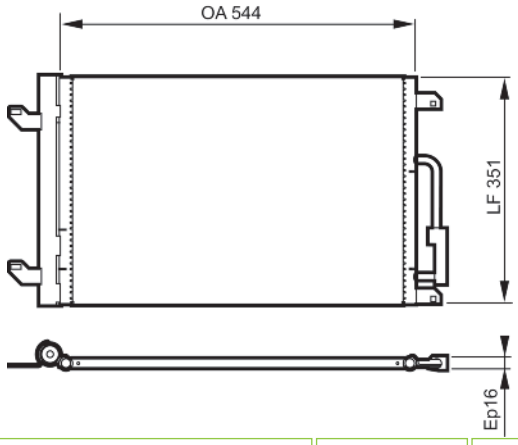


| | | | |
|---|---|---|---|
| LANCIA | 51708843 | 544x351x16 | |

## 814192 ALM

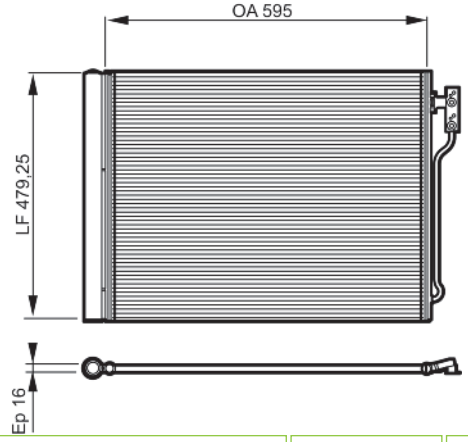


| | | | |
|---|---|---|---|
| BMW | 64537618770 | 595x479,25 | |

## 814199

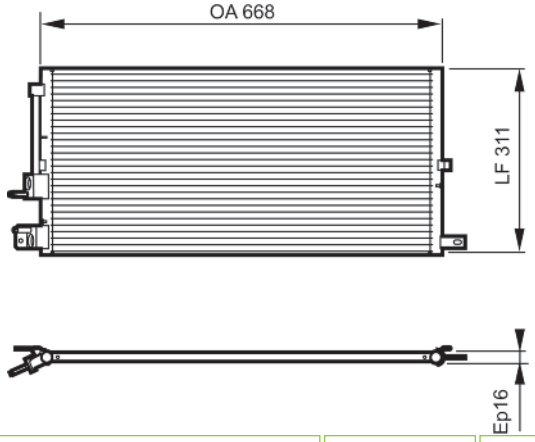


| | | | |
|---|---|---|---|
| JAGUAR | C2S31605 | 668x311x16 | |

## 814201

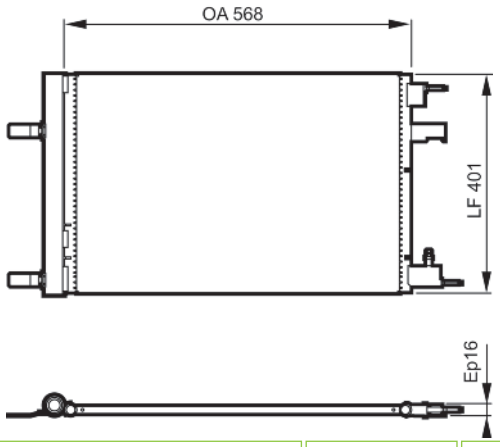


| | | |
|---|---|---|
| OPEL 1850136 | 568x401x16 | |

## 814204 ALM

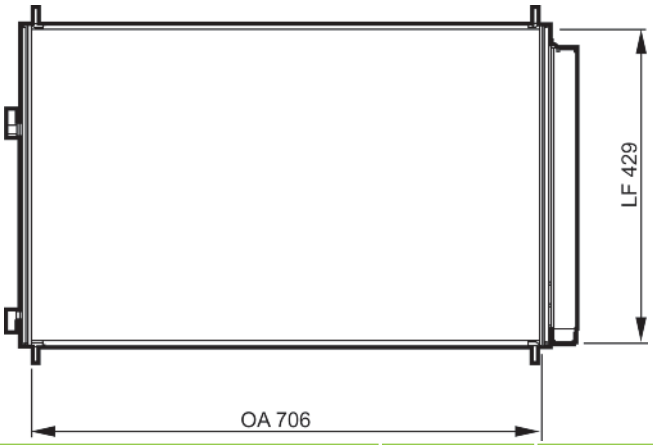


| | | |
|---|---|---|
| TOYOTA 8846042100 | 706x429x16 | |

## 814202

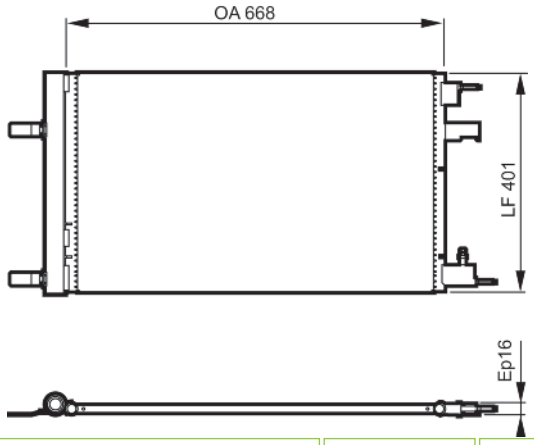


| | | |
|---|---|---|
| OPEL 1850135 | 668x401x16 | |

## 814205 ALM

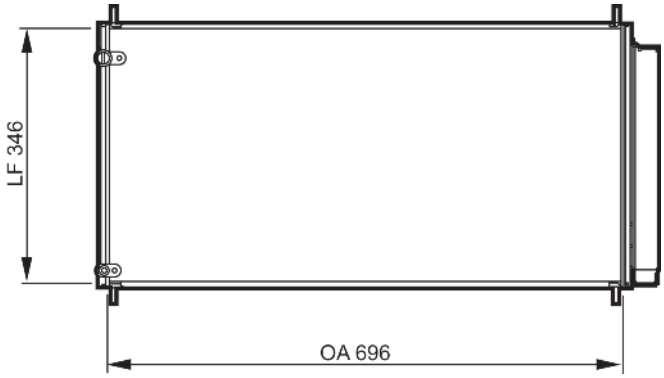


| | | |
|---|---|---|
| TOYOTA 8845012290 | 696x346x16 | |

## 814203 ALM

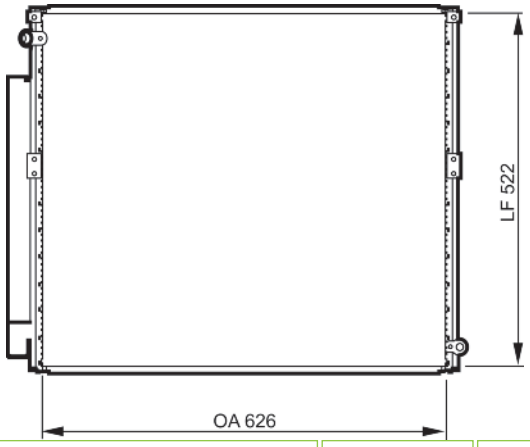


| | | |
|---|---|---|
| TOYOTA 8846160100 | 626x522x16 | |

## 814206 ALM

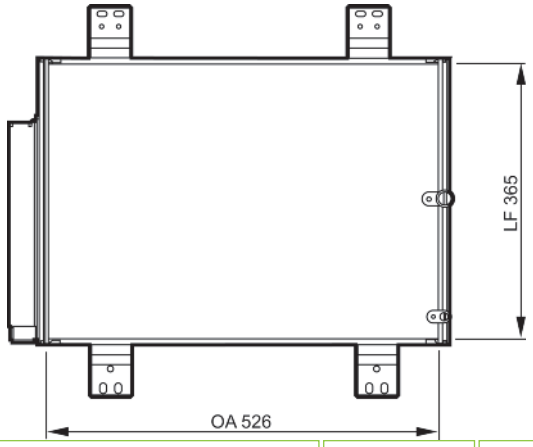


| | | |
|---|---|---|
| DAIHATSU 88450B4020 | 526x365x16 | |

## 814207 ALM

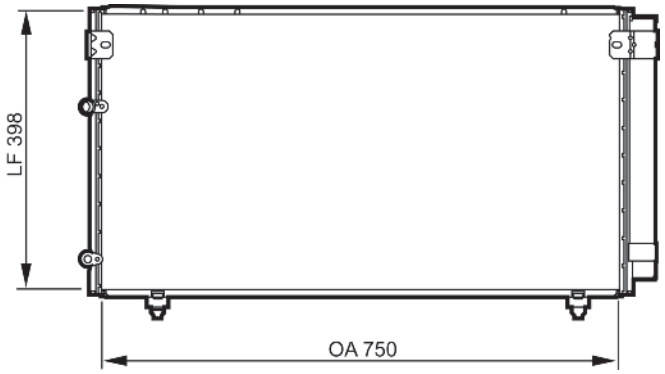


| | | |
|---|---|---|
| TOYOTA 8846044520 | 750x398x16 | |

## 814208 ALM

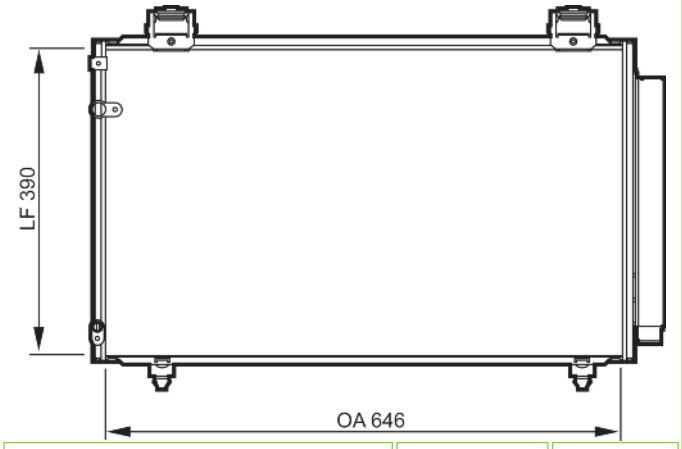


| | | |
|---|---|---|
| TOYOTA 8845005100 | 646x390x16 | |

## 814209 ALM

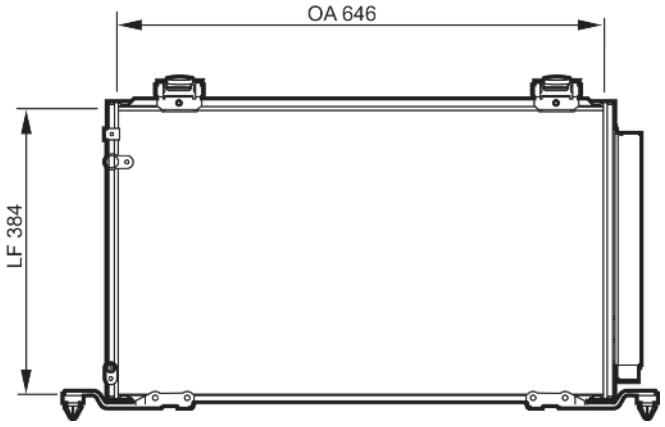


| | | |
|---|---|---|
| TOYOTA 8845005120 | 646x384x16 | |

## 814210 ALM

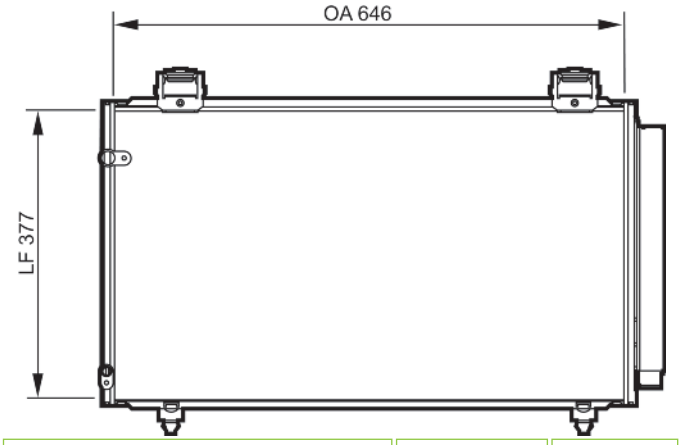


| | | |
|---|---|---|
| TOYOTA 8845002240 | 646x377x16 | |

## 814211 ALM

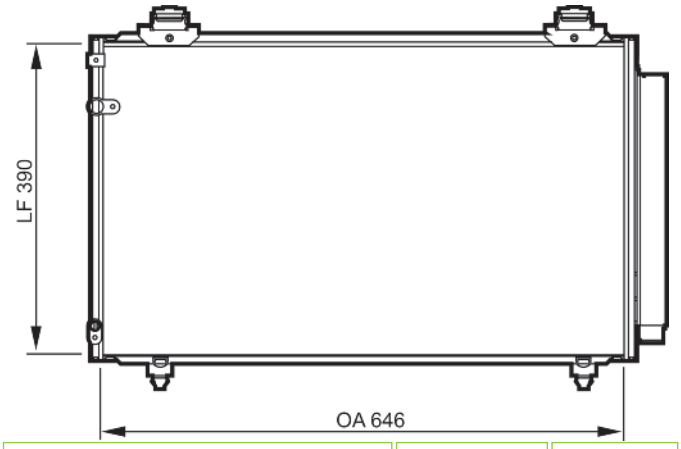


| | | |
|---|---|---|
| TOYOTA 884500F110 | 646x390x16 | |

## 814212 ALM

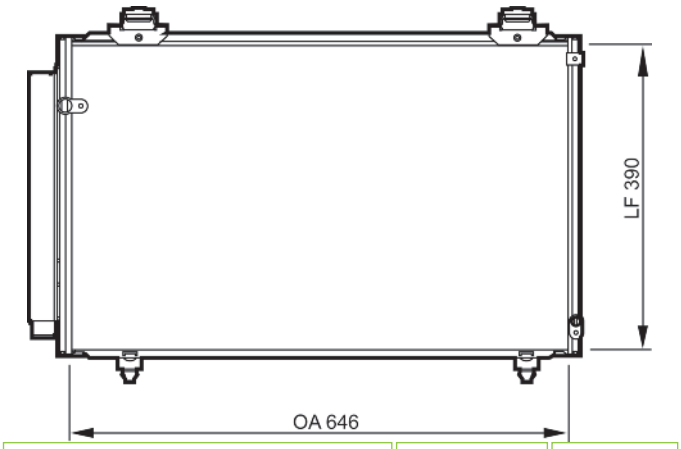


| | | |
|---|---|---|
| TOYOTA 884500F100 | 646x390x16 | |

## 814213 ALM

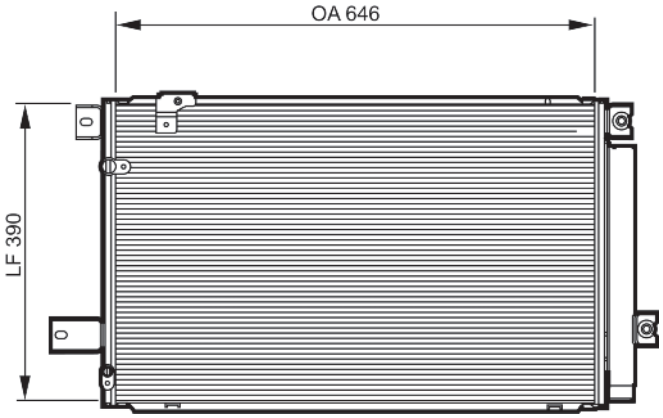


| | | |
|---|---|---|
| TOYOTA 8845005170 | 646x390x16 | |

## 814216 ALM

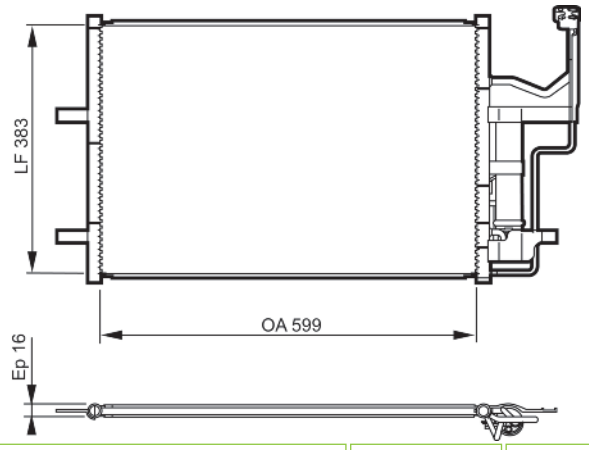


| | | |
|---|---|---|
| MAZDA BPYK6148ZA | 599x383x16 | |

## 814214 ALM

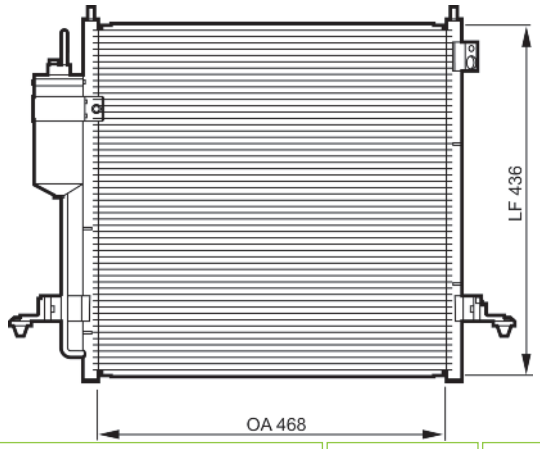


| | | |
|---|---|---|
| MITSUBISHI 7812A171 | 467x434x16 | |

## 814217 ALM

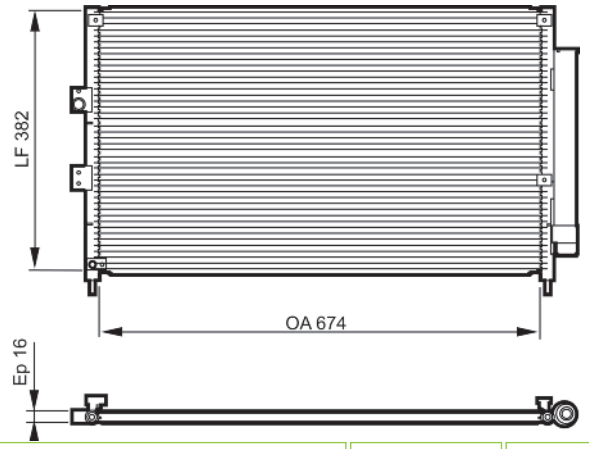


| | | |
|---|---|---|
| HONDA 80110SNBA41 | 673x383x16 | |

## 814215 ALM

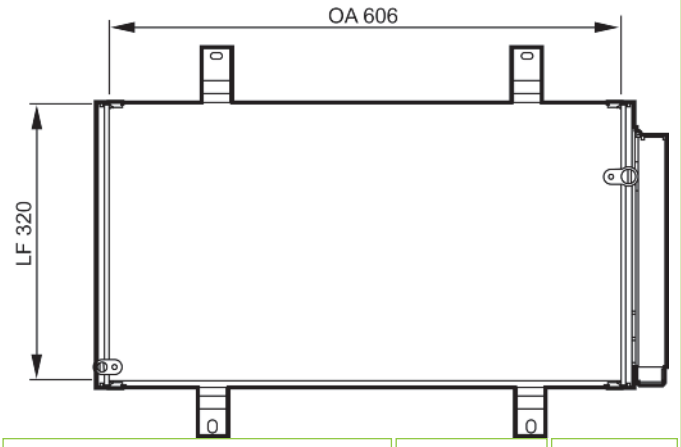


| | | |
|---|---|---|
| MAZDA F15161480 | 606x320x16 | |

## 814218 ALM

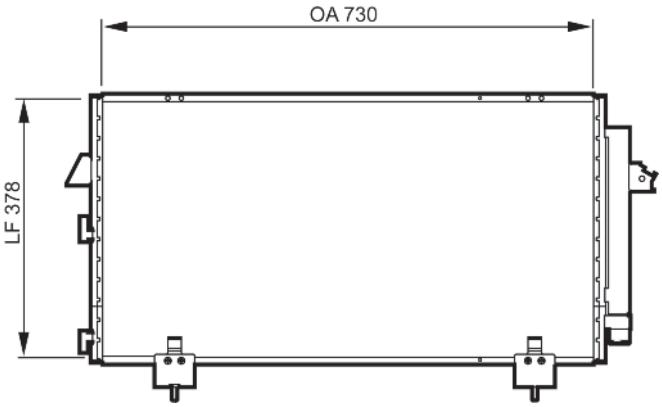


| | | |
|---|---|---|
| TOYOTA 8846042070 | 730x378 | |

## 814219 ALM

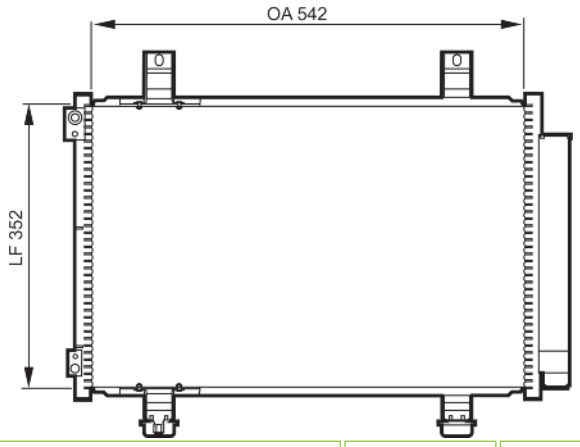


| | | | |
|---|---|---|---|
| SUZUKI | 9531051K00 | 542x346x16 | |

## 814223 ALM

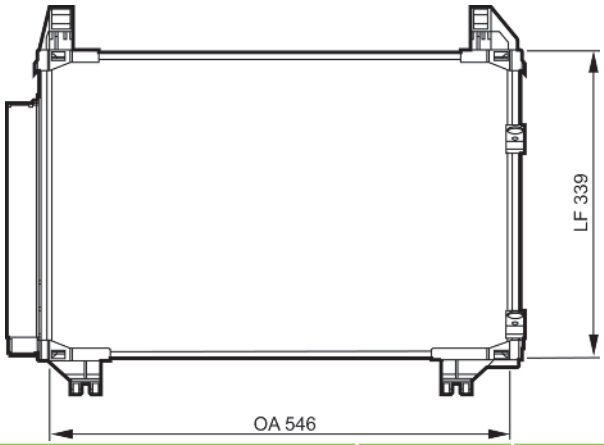


| | | | |
|---|---|---|---|
| TOYOTA | 884600D050 | 522x311,8x16 | |

## 814220 ALM

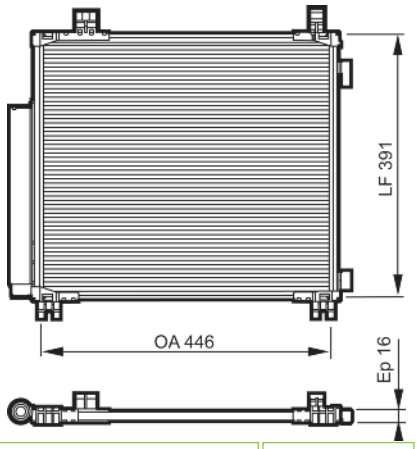


| | | | |
|---|---|---|---|
| TOYOTA | 8846074010 | 446x391x16 | |

## 814224 ALM

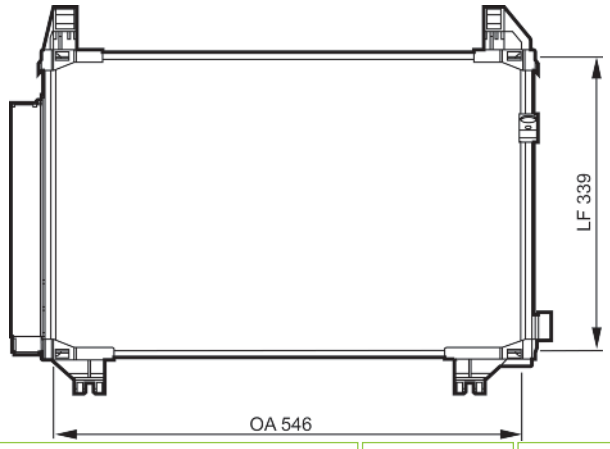


| | | | |
|---|---|---|---|
| TOYOTA | 884600D060 | 522x311,8x16 | |

## 814221 ALM

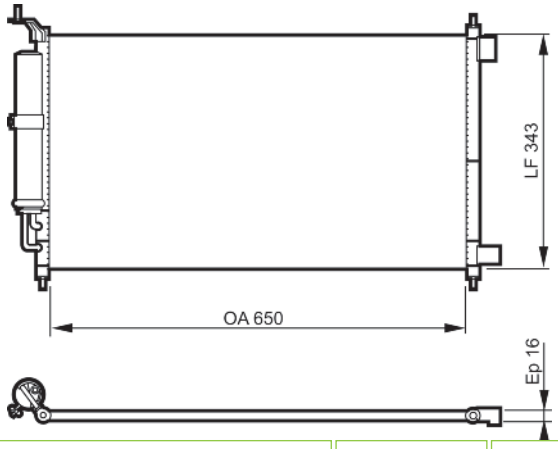


| | | | |
|---|---|---|---|
| NISSAN | 92110EW80A | 650x343 | |

## 814225 ALB

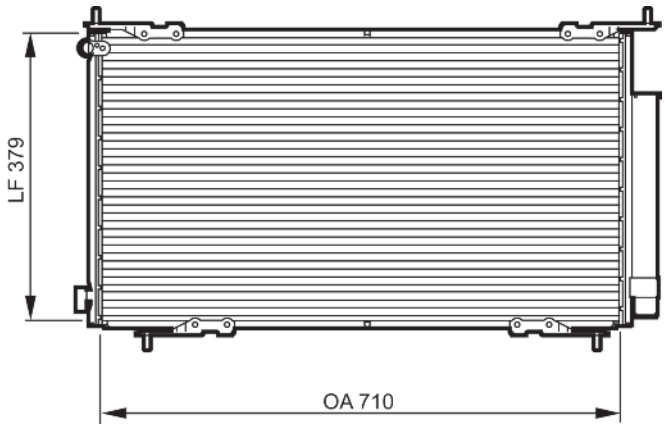


| | | | |
|---|---|---|---|
| HONDA | 80110S9A003 | 650x343x16 | |

## 814226 ALM

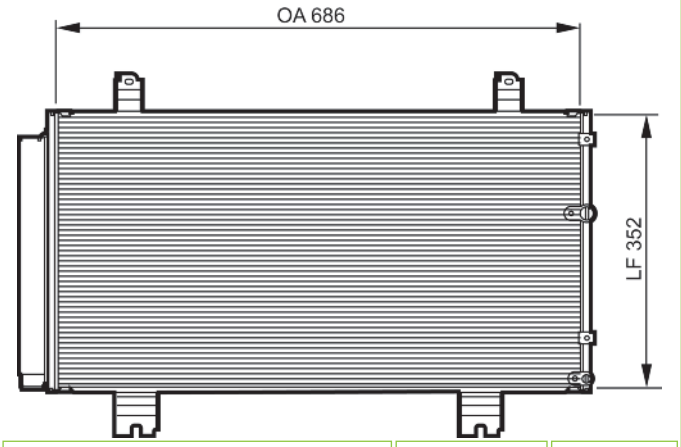


| | | | |
|---|---|---|---|
| LEXUS | 8846053030 | 679x332,69x16 | |

## 814227 ALM

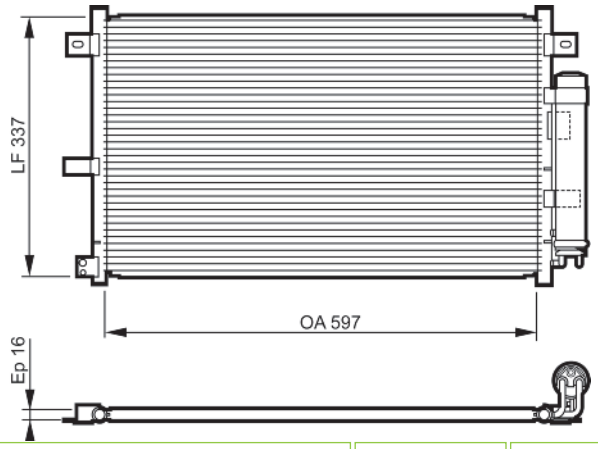


| | | | |
|---|---|---|---|
| MAZDA | NE5161480C | 594x332,69x16 | |

## 814228 ALM

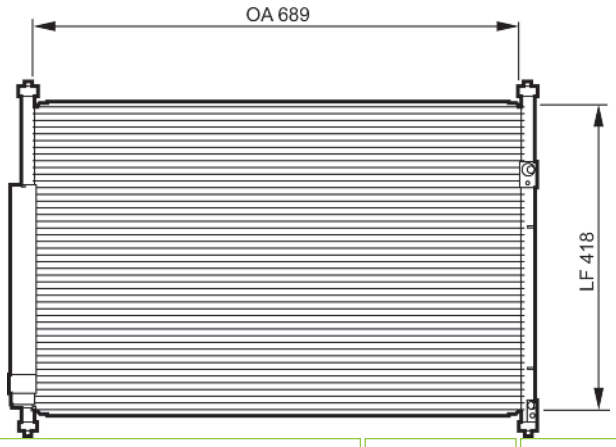


| | | | |
|---|---|---|---|
| SUZUKI | 9531064J00 | 668x423,95x16 | |

## 814230 ALM

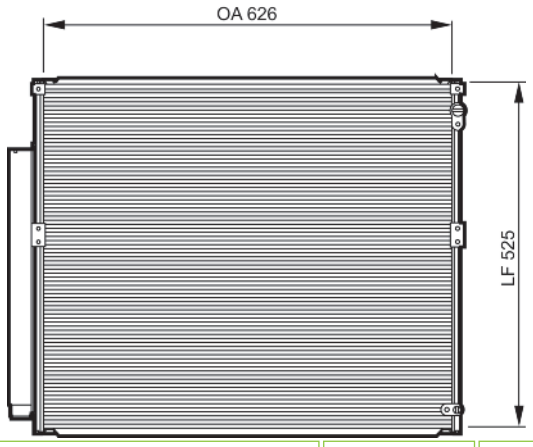


| | | | |
|---|---|---|---|
| TOYOTA | 8846160091 | 630x478,4x16 | |

## 814231 ALM

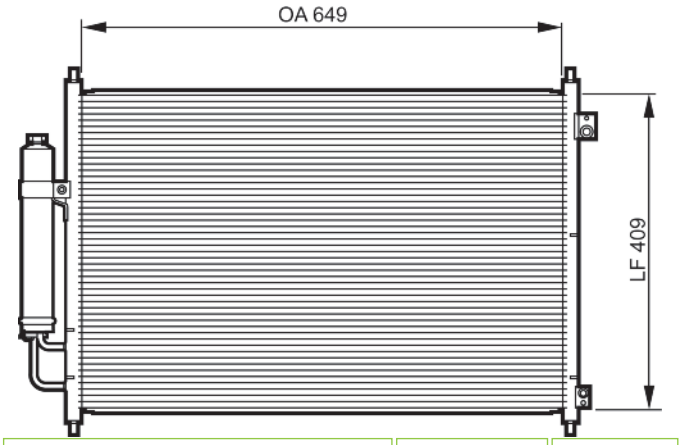


| | | | |
|---|---|---|---|
| NISSAN | 92100JG000 | 644x409,8x16 | |

## 814232 ALM

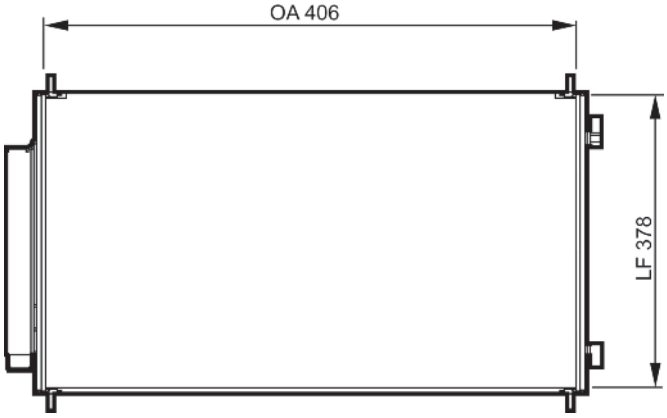


| | | | |
|---|---|---|---|
| HONDA | 80110SWAA01 | 406x378 | |

## 814233 ALM

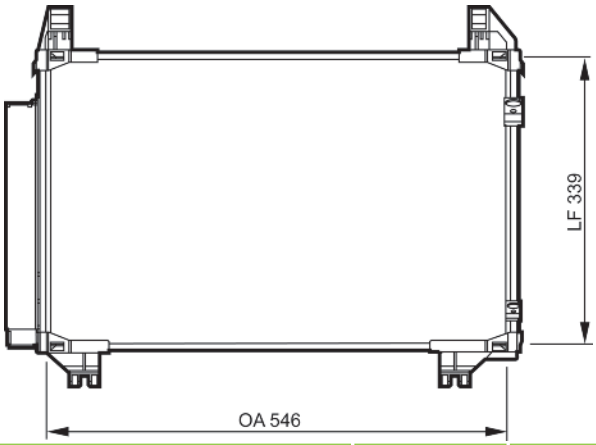


| | | |
|---|---|---|
| TOYOTA 8846052110 | 545x311,8x16 | |

## 814236 ALM

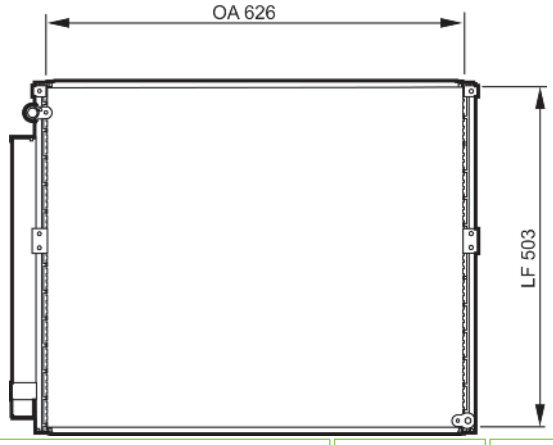


| | | |
|---|---|---|
| TOYOTA 8846135160 | 628x503x16 | |

## 814234 ALM

| | | |
|---|---|---|
| TOYOTA 8845012280 | 626x370,6x16 | |

## 814237 ALM

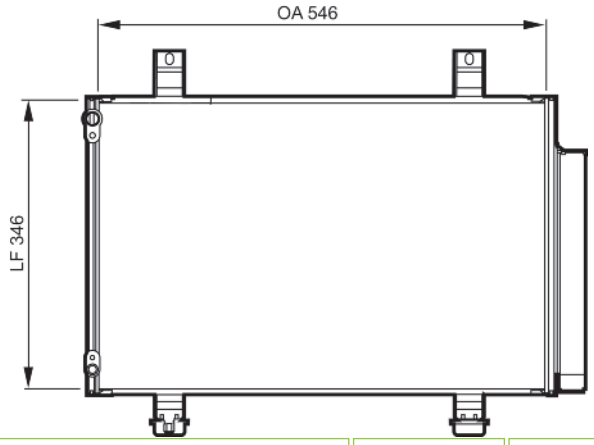


| | | |
|---|---|---|
| SUZUKI 9531063J00 | 534x322,55x16 | |

## 814235 ALM

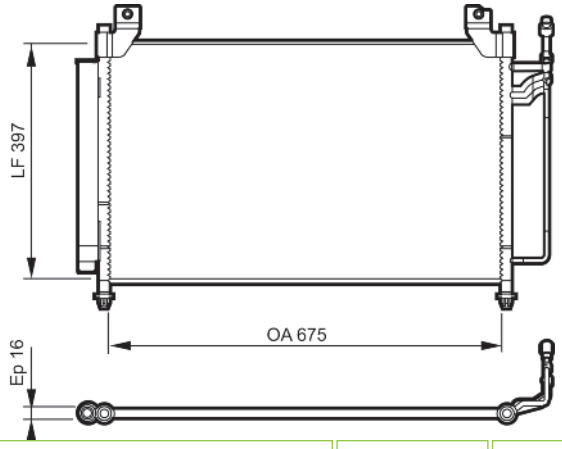


| | | |
|---|---|---|
| MAZDA EH4461480A | 675x397x16 | |

## 814238 ALM

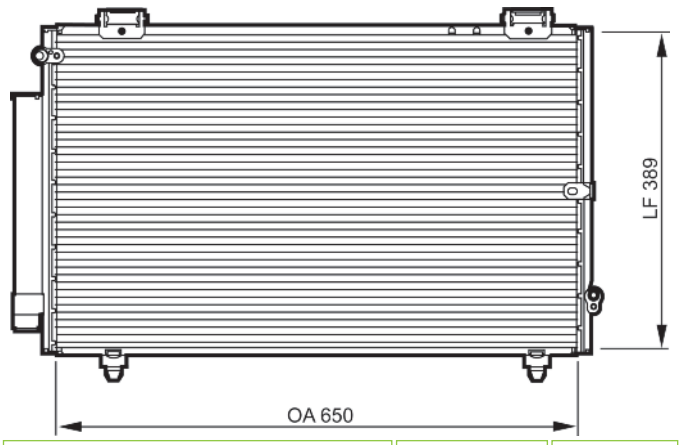


| | | |
|---|---|---|
| TOYOTA 8846012540 | 653x363,11x16 | |

## 814239 ALM

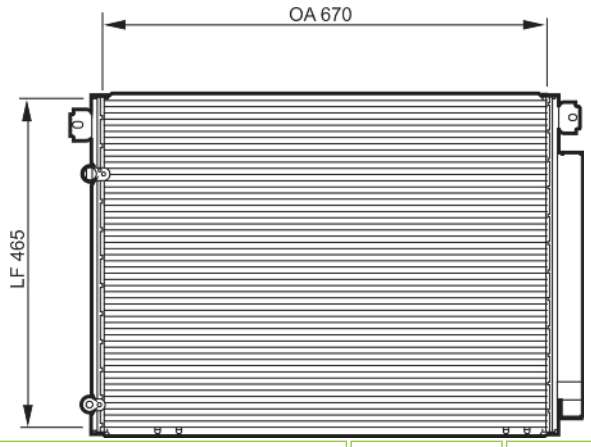


| | | | |
|---|---|---|---|
| MAZDA | LD4761480A | 670x465x16 | |

## 814240 ALM

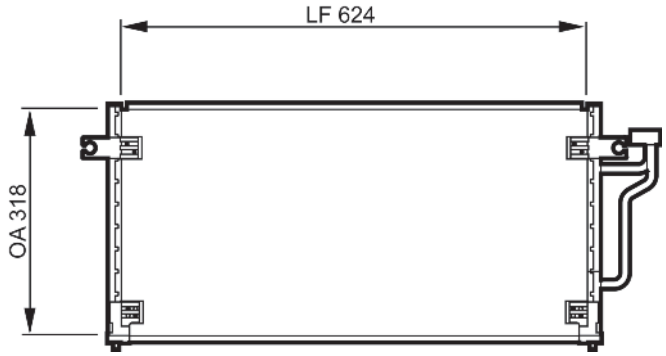


| | | | |
|---|---|---|---|
| MITSUBISHI | MB657967 | 624x318x16 | |

## 814241 ALM

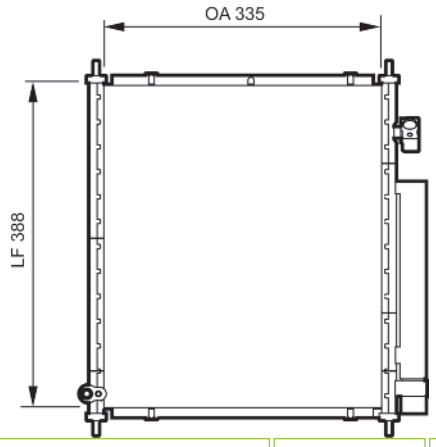


| | | | |
|---|---|---|---|
| HONDA | 80110SAA003 | 335x388x16 | |

## 814242 ALM

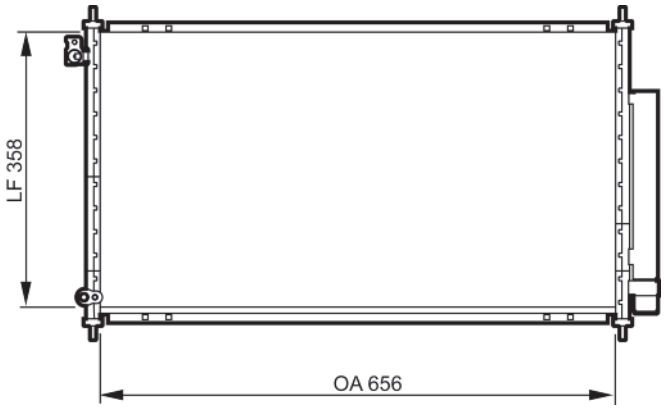


| | | | |
|---|---|---|---|
| HONDA | 80110SEA003 | 656x358x16 | |

## 814243 ALM

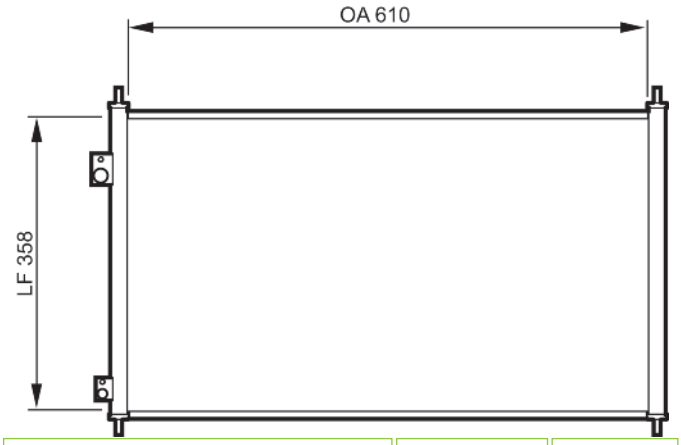


| | | | |
|---|---|---|---|
| HONDA | 80110S5A003 | 610x358x16 | |

## 814244 ALM

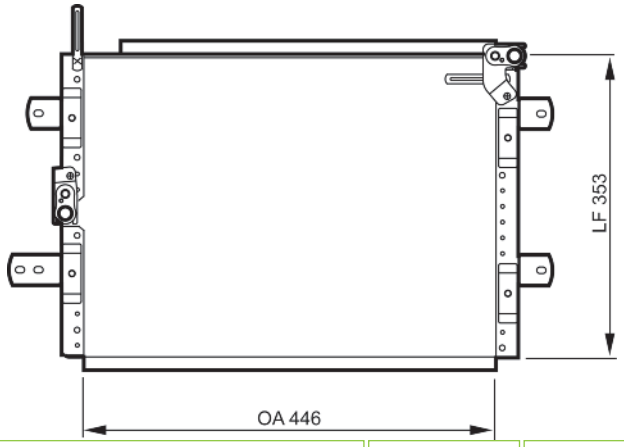


| | | | |
|---|---|---|---|
| SUZUKI | 9531067A50 | 446x353x26 | |

## 814245 ALM

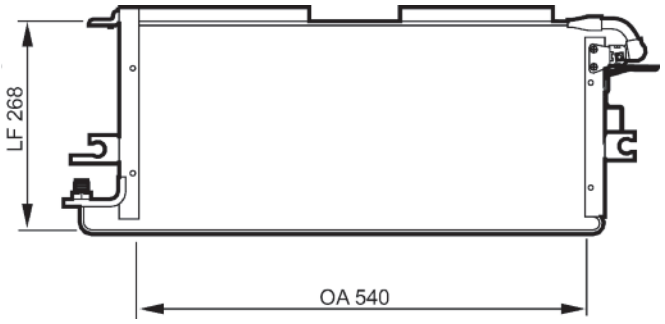


| | | | |
|---|---|---|---|
| TOYOTA | 8846035130 | 540x268 | |

## 814248 ALM

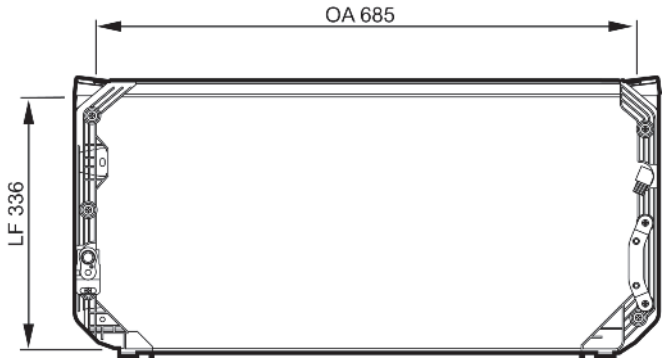


| | | | |
|---|---|---|---|
| TOYOTA | 8846012460 | 685x336 | |

## 814246 ALM

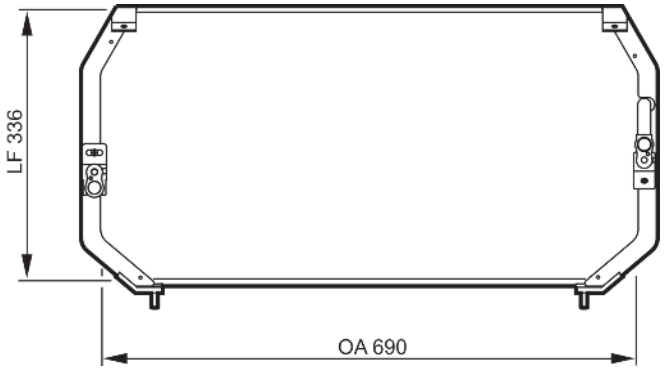


| | | | |
|---|---|---|---|
| TOYOTA | 8846005010 | 690x336x22 | |

## 814250 ALM

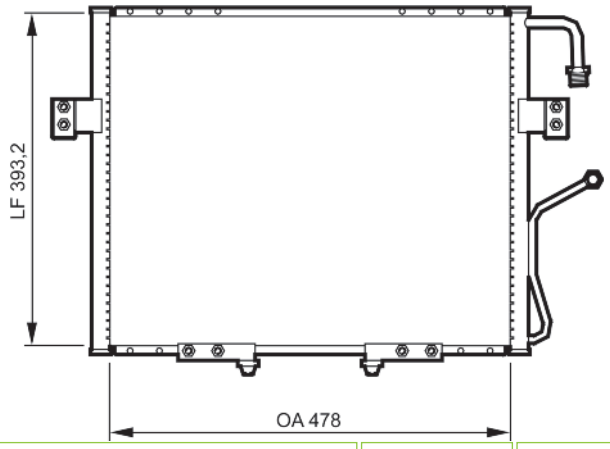


| | | | |
|---|---|---|---|
| KIA | 0K01161480C | 478x393,2 | |

## 814247 ALM

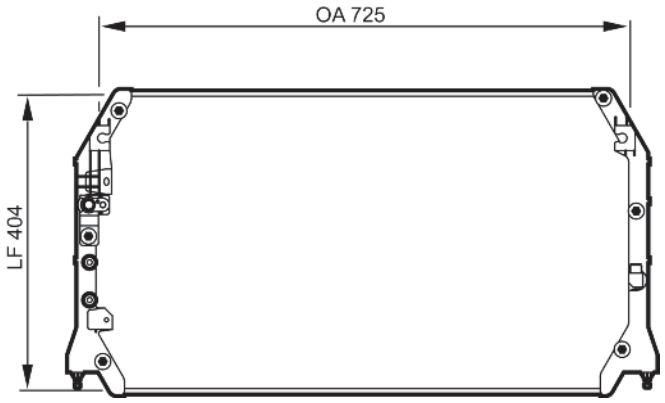


| | | | |
|---|---|---|---|
| TOYOTA | 8846006061 | 725x404x22 | |

## 814251 ALM

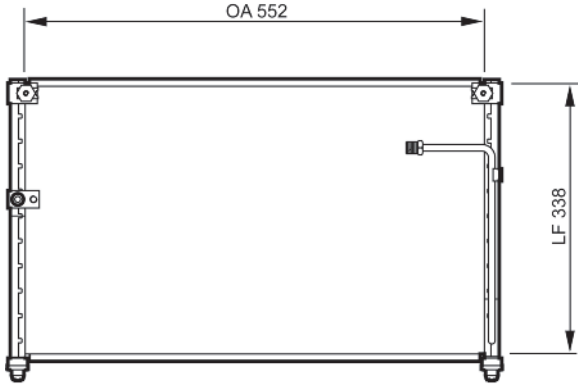


| | | | |
|---|---|---|---|
| MAZDA | GA5R61480A | 552x338x16 | |

## 814252 ALM

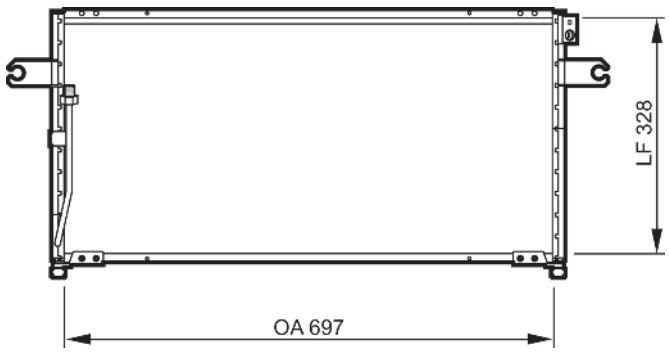


| | | | |
|---|---|---|---|
| NISSAN | 92101G9800 | 697x328 | |

## 814255 ALM

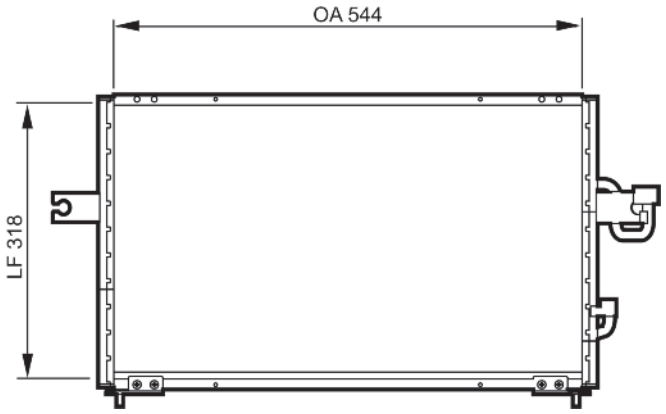


| | | | |
|---|---|---|---|
| HYUNDAI | 9760622051 | 544x318x16 | |

## 814253 ALM

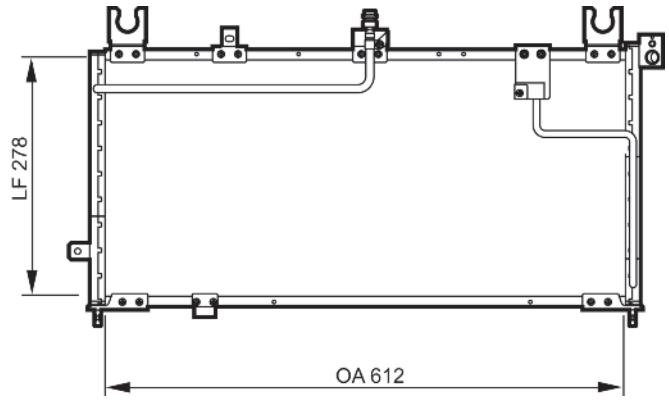


| | | | |
|---|---|---|---|
| MAZDA | B01W61480F | 612x278x16 | |

## 814256 ALM

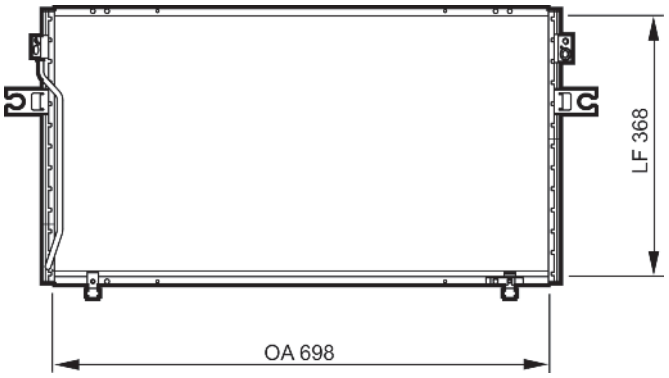


| | | | |
|---|---|---|---|
| NISSAN | 921100L710 | 698x368 | |

## 814254 ALM

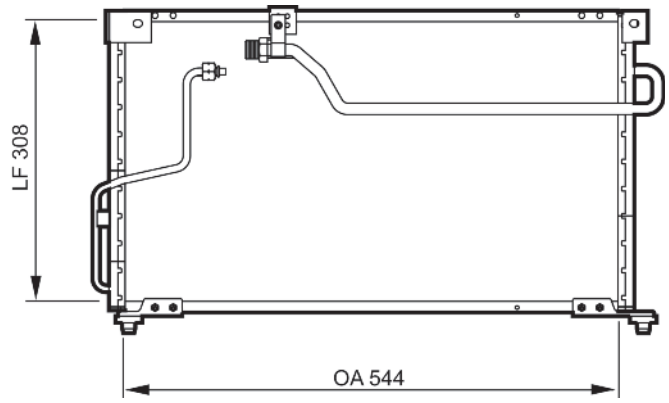


| | | | |
|---|---|---|---|
| MAZDA | GA7H61480 | 544x308x16 | |

## 814257 ALM

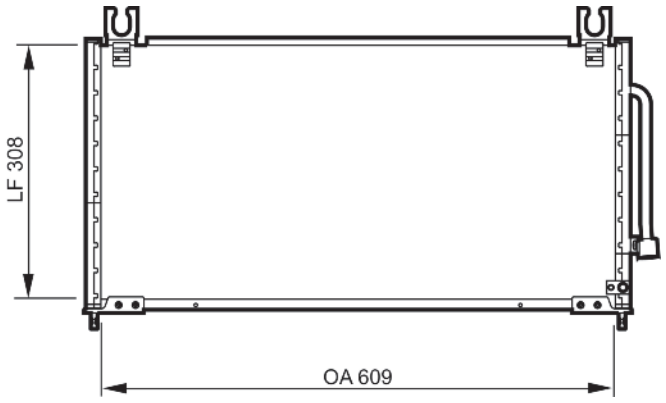


| | | | |
|---|---|---|---|
| MAZDA | BC1M61480A | 609x308x16 | |

## 814258 ALM

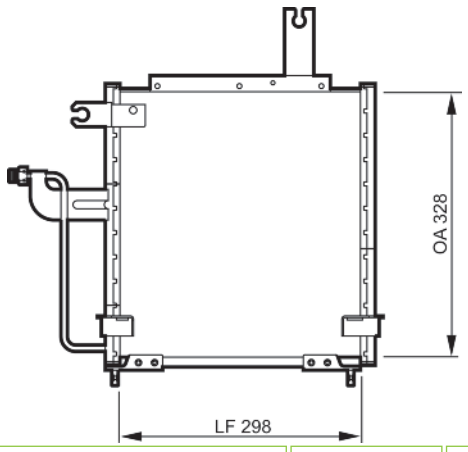


| | | | |
|---|---|---|---|
| MAZDA | D20161480B | 298x328x16 | |

## 814261 ALM

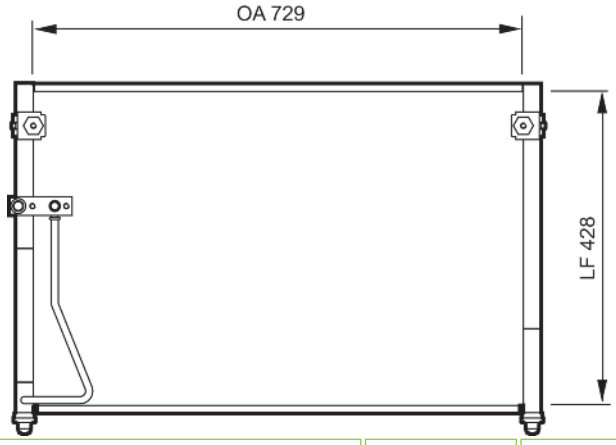


| | | | |
|---|---|---|---|
| TOYOTA | 8846028550 | 729x428x16 | |

## 814259 ALM

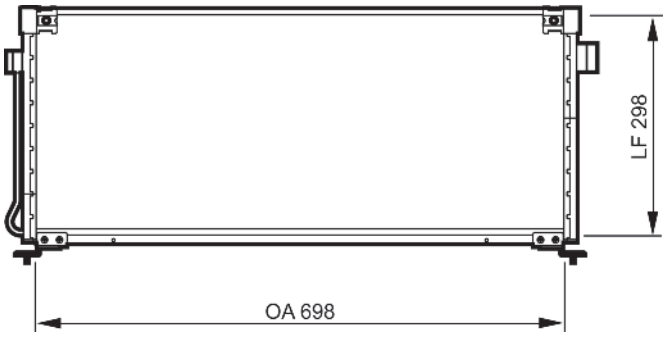


| | | | |
|---|---|---|---|
| SUBARU | 73210AC021 | 698x298x16 | |

## 814262 ALM

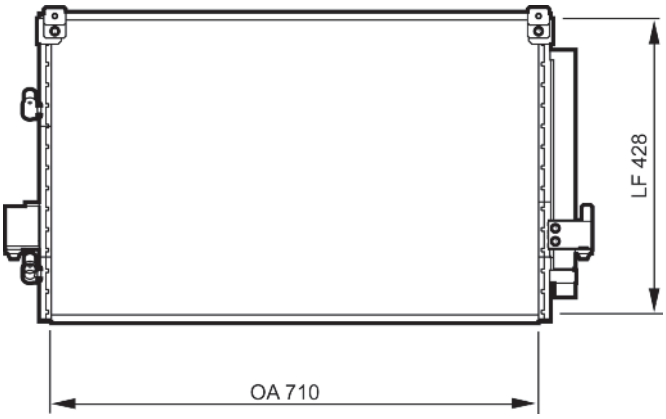


| | | | |
|---|---|---|---|
| MITSUBISHI | MR996738 | 710x428x16 | |

## 814260 ALM

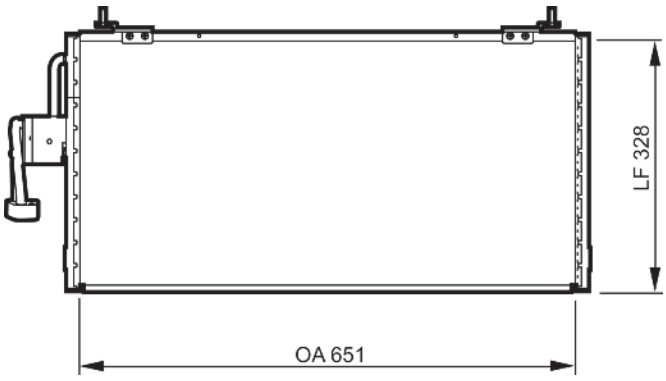


| | | | |
|---|---|---|---|
| MITSUBISHI | MR513005 | 651x328x16 | |

## 814263 ALM

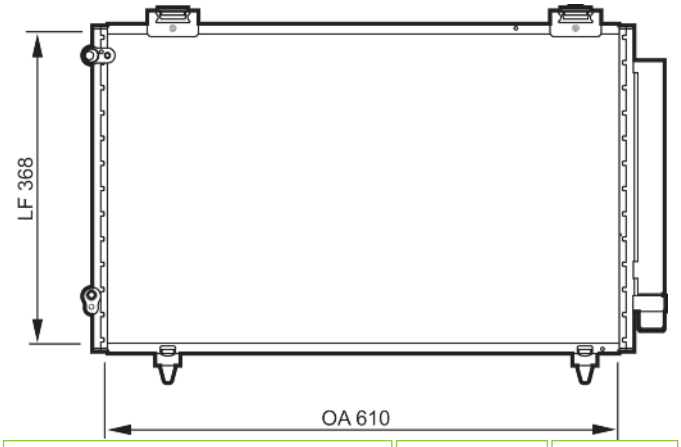


| | | | |
|---|---|---|---|
| TOYOTA | 8845002170 | 610x368 | |

## 814264 ALM

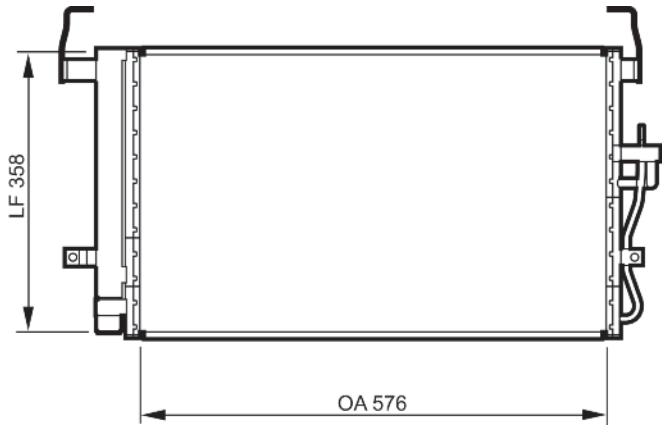


| | | |
|---|---|---|
| HYUNDAI 976062D000 | 576x358x16 | |

## 814267 ALM

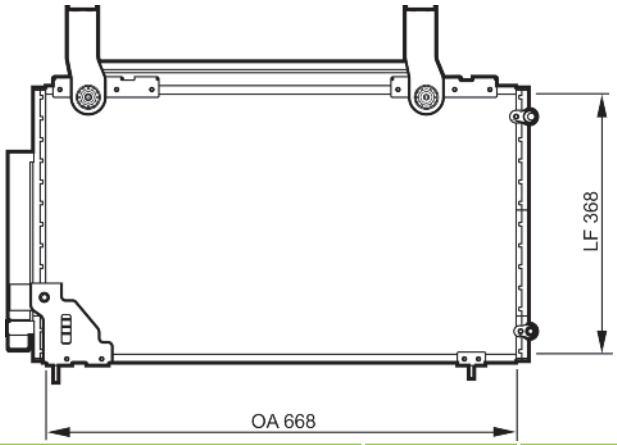


| | | |
|---|---|---|
| HONDA 80100S7A013 | 668x368x16 | |

## 814265 ALM

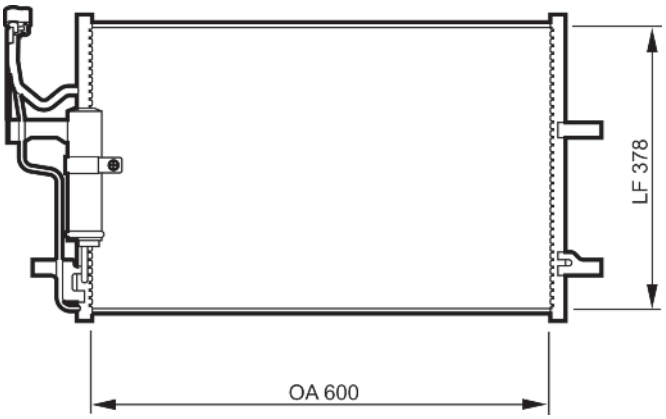


| | | |
|---|---|---|
| MAZDA BP4K61480B | 600x378x16 | |

## 814268 ALM

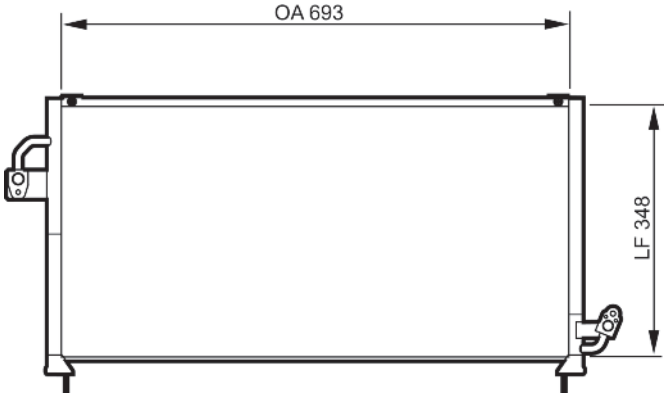


| | | |
|---|---|---|
| SUBARU 73210FC030 | 693x348x16 | |

## 814266 ALM

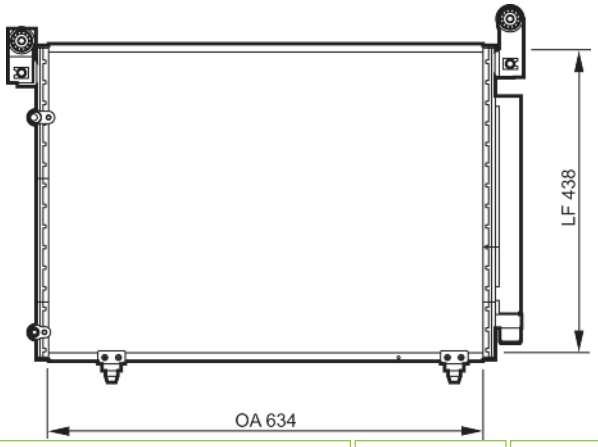


| | | |
|---|---|---|
| MAZDA LD4761480 | 634x438x16 | |

## 814269 ALM

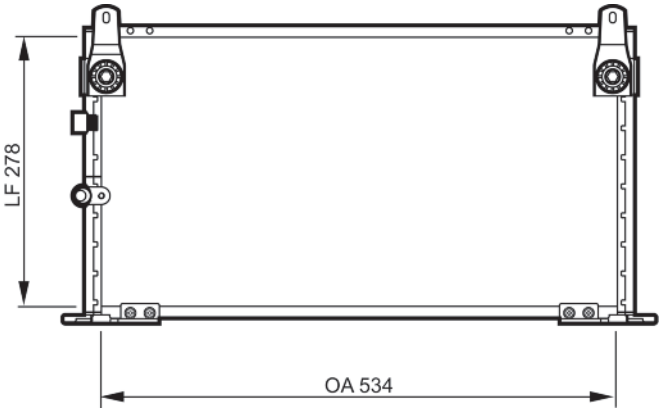


| | | |
|---|---|---|
| TOYOTA 8846035280 | 534x278x16 | |

## 814270 ALM

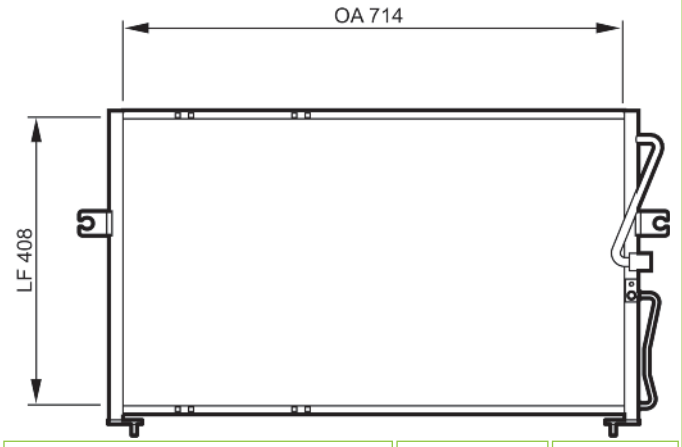


| | | |
|---|---|---|
| KIA OK55261460D | 714x408 | |

## 814273 ALM

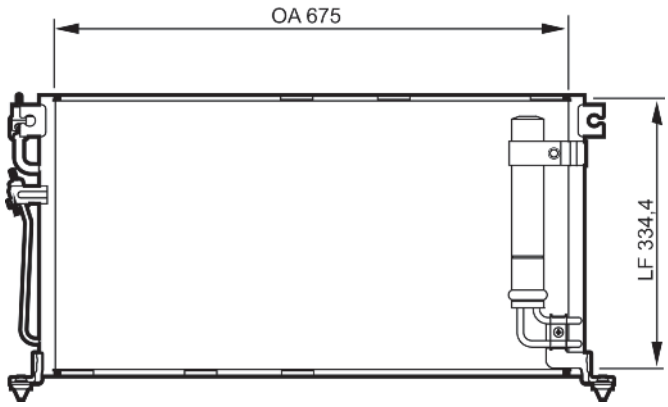


| | | |
|---|---|---|
| MITSUBISHI MN151100 | 675x334,4x16 | |

## 814271 ALM

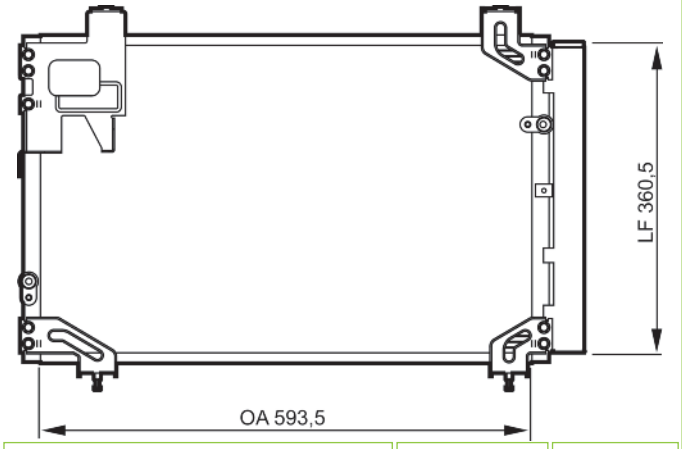


| | | |
|---|---|---|
| TOYOTA 8845005140 | 593,5x360,5x16 | |

## 814274 ALM

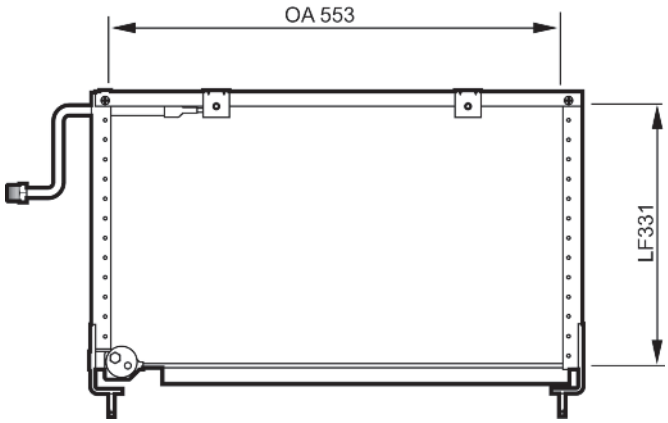


| | | |
|---|---|---|
| MAZDA GJ5161480B | 553x331 | |

## 814272 ALM

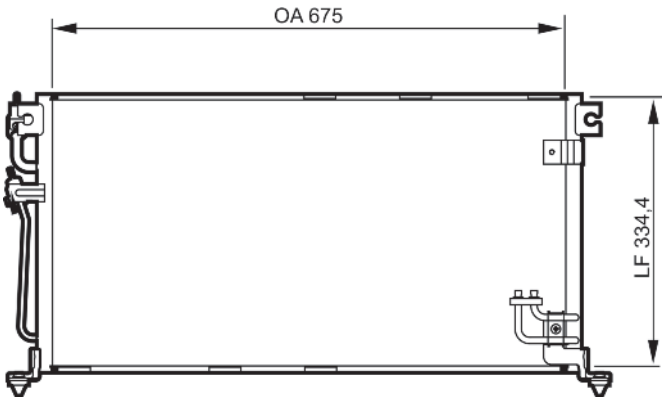


| | | |
|---|---|---|
| MITSUBISHI MN134204 | 675x334,4 | |

## 814275 ALM

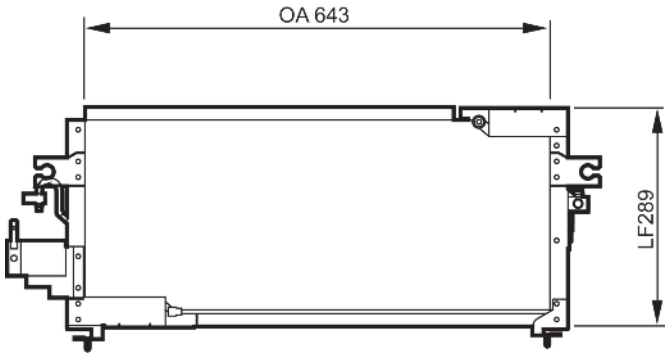


| | | |
|---|---|---|
| NISSAN 9211165Y00 | 643x289x26 | |

## 814276 ALM

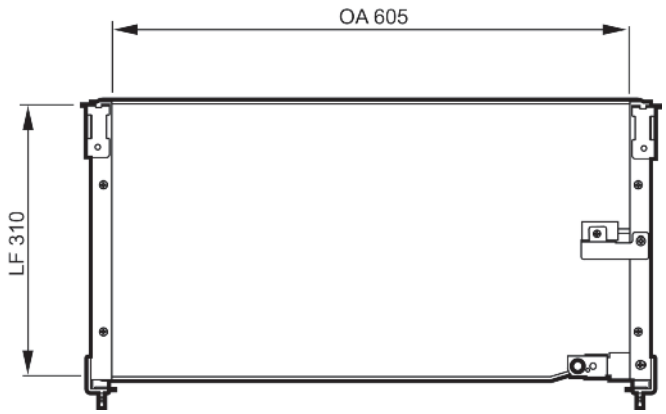


| | | |
|---|---|---|
| HONDA 80100SM1A23 | 605x310x26 | |

## 814279 ALM

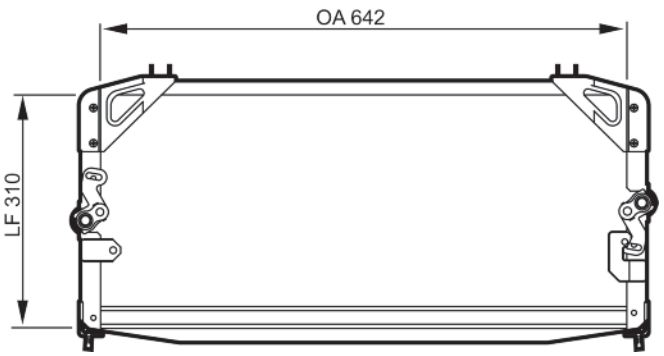


| | | |
|---|---|---|
| TOYOTA 8846032090 | 642x310x22 | |

## 814277 ALM

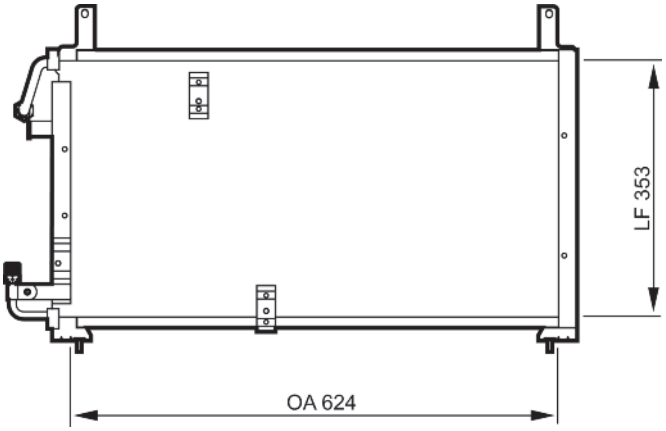


| | | |
|---|---|---|
| DAEWOO 96265216 | 624x353x26 | |

## 814280 ALM

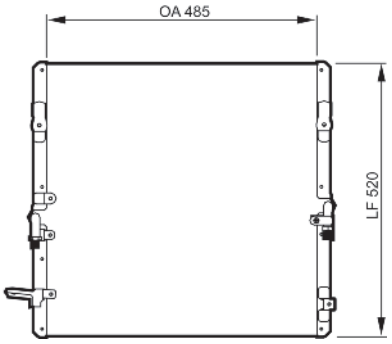


| | | |
|---|---|---|
| TOYOTA 8846160051 | 485x520 | |

## 814278 ALM

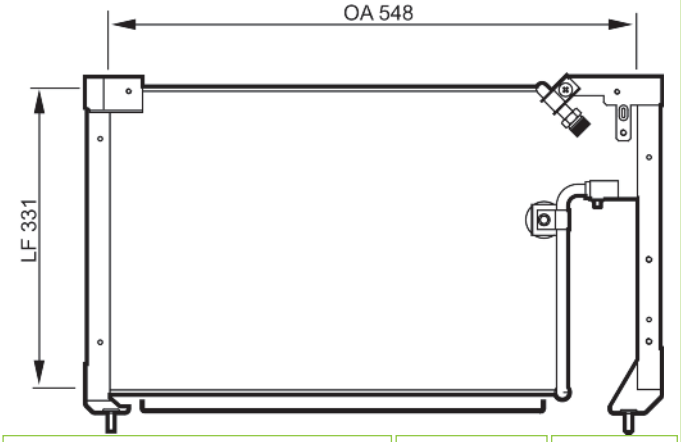


| | | |
|---|---|---|
| MAZDA BR7061480 | 548x331 | |

## 814281 ALM

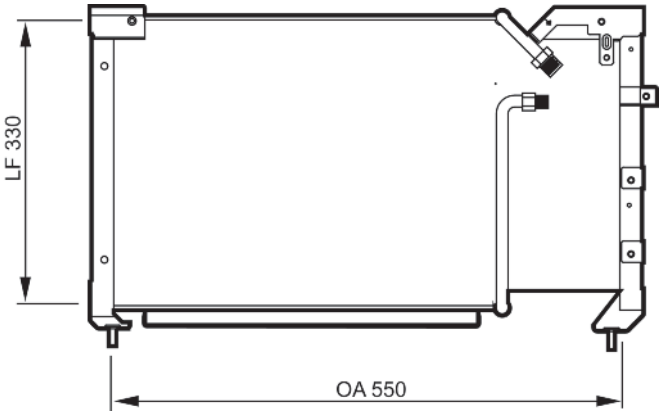


| | | |
|---|---|---|
| MAZDA BB7C61480 | 550x330 | |

## 814282 ALM

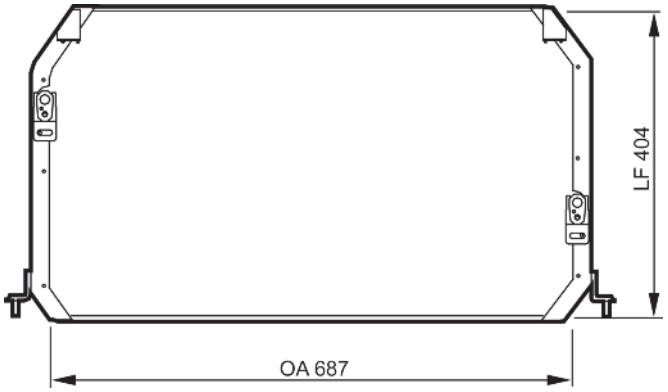


| | | |
|---|---|---|
| TOYOTA 8846033010 | 687x404x22 | |

## 814285 ALM

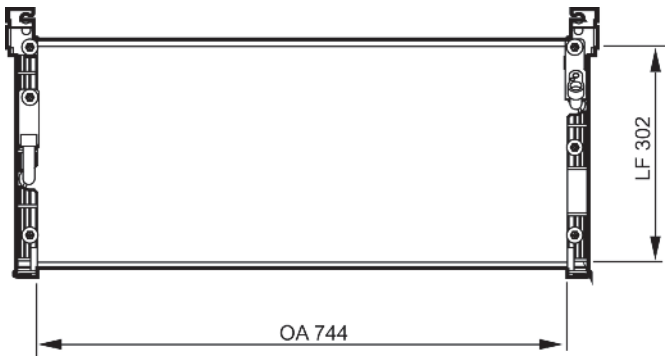


| | | |
|---|---|---|
| TOYOTA 8846042021 | 744x302x22 | |

## 814283 ALM

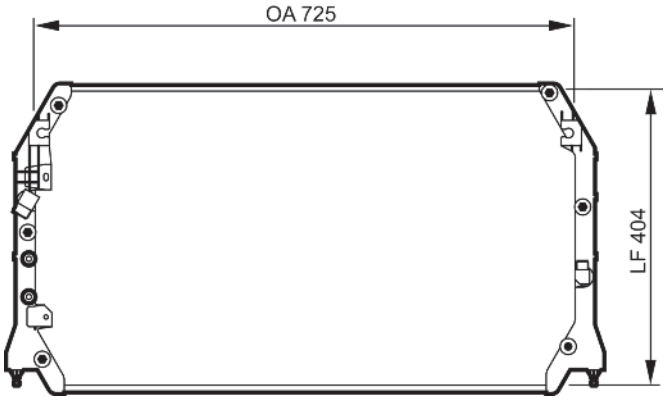


| | | |
|---|---|---|
| TOYOTA 8846006060 | 725x404x22 | |

## 814286 ALM

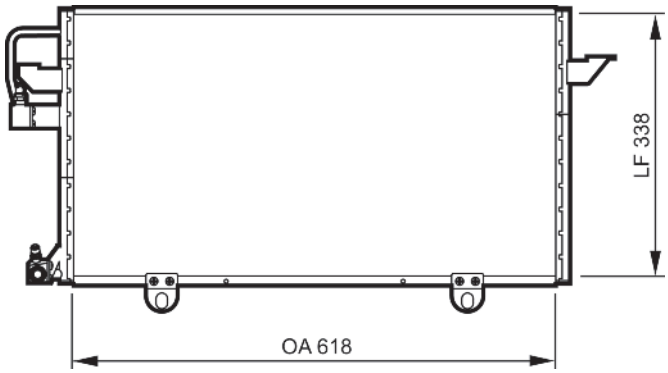


| | | |
|---|---|---|
| AUDI 8A0260403D | 618x338x16 | |

## 814284 ALM

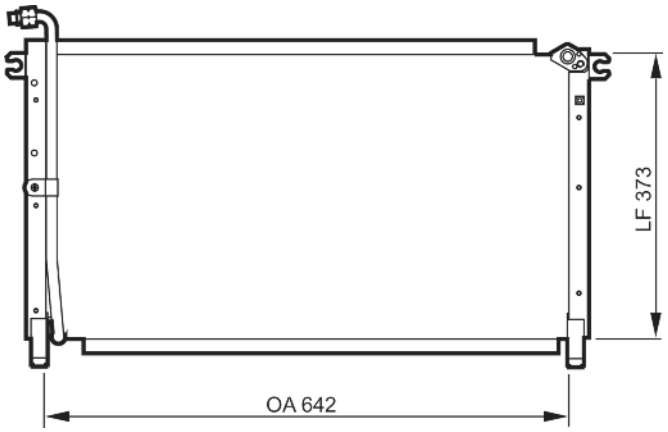


| | | |
|---|---|---|
| NISSAN 9211001G61 | 642x373 | |

## 814287 ALM

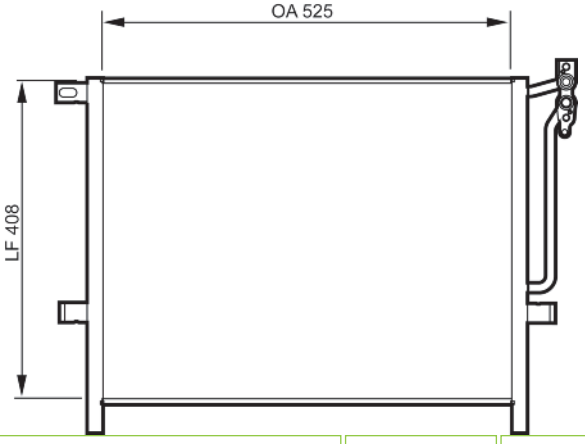


| | | |
|---|---|---|
| BMW 64536914033 | 525x408x16 | |

## 814288 ALM

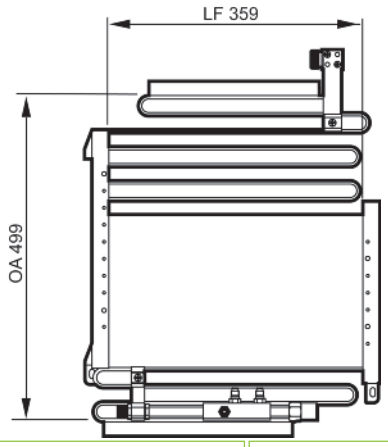


| | | | |
|---|---|---|---|
| AUDI | 893260403L | 359x499x48 | |

## 814291 ALM

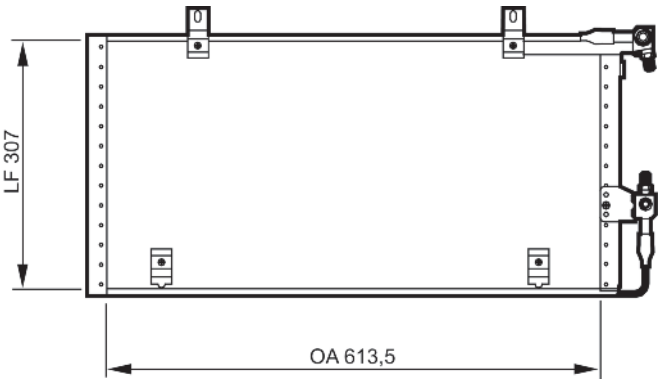


| | | | |
|---|---|---|---|
| AUDI | 893260403 | 613,5x307x32 | |

## 814289 ALM

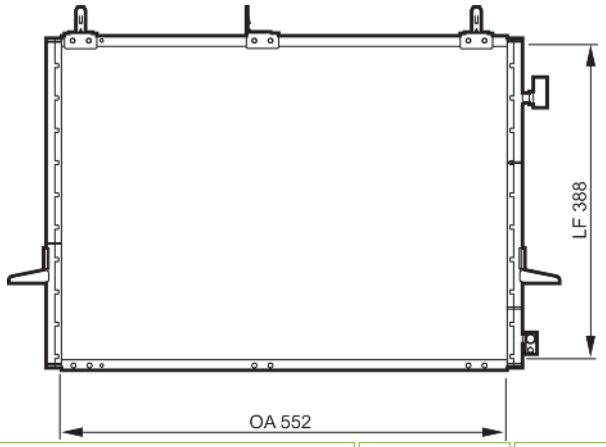


| | | | |
|---|---|---|---|
| FORD | 7286932 | 552x388x22 | |

## 814292 ALM

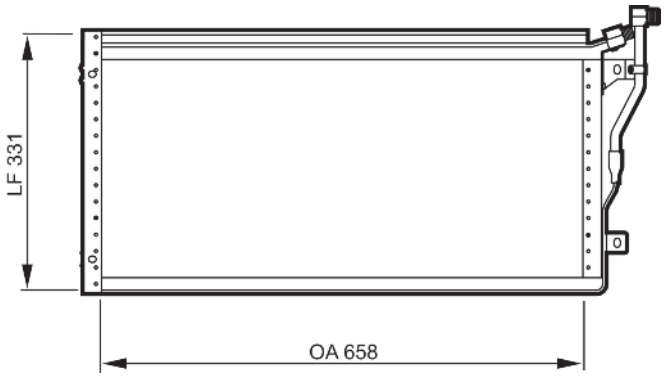


| | | | |
|---|---|---|---|
| FIAT | 82471989 | 658x331x22 | |

## 814290 ALM

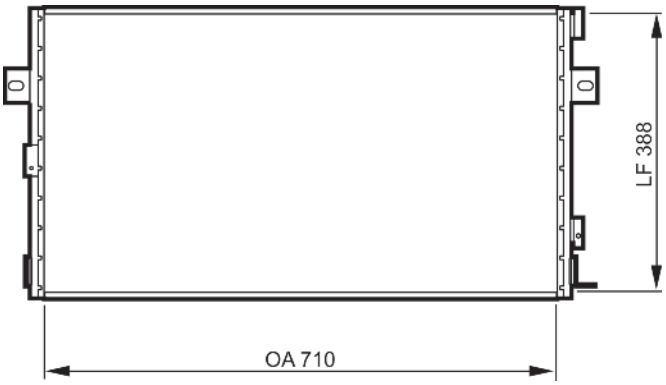


| | | | |
|---|---|---|---|
| CHRYSLER | 4809129AA | 710x388x22 | |

## 814293 ALM

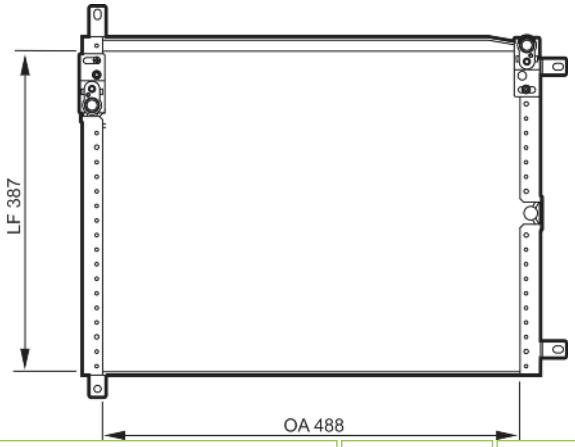


| | | | |
|---|---|---|---|
| ALFA ROMEO | 82487879 | 488x387x22 | |

## 814295 ALM

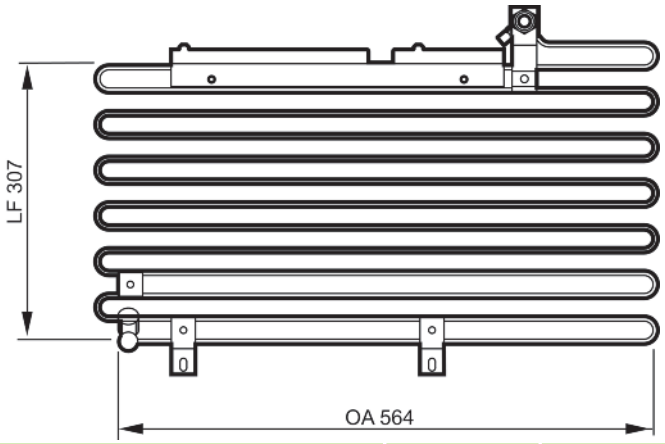


| | | |
|---|---|---|
| AUDI 443260403F | 564x307x48 | |

## 814300 ALM

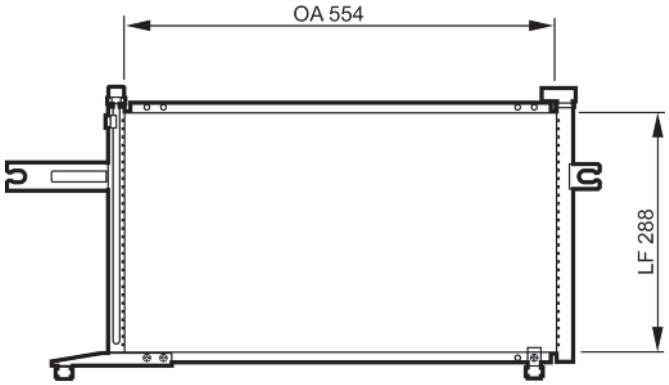


| | | |
|---|---|---|
| NISSAN 9211050B00 | 554x288x16 | |

## 814296 ALM

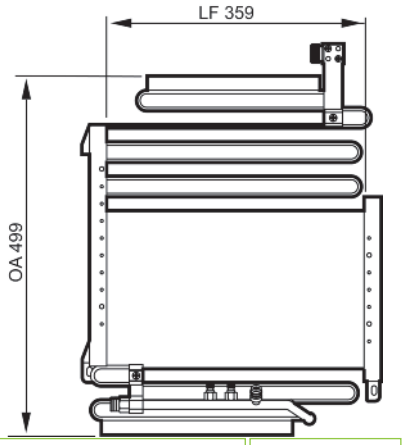


| | | |
|---|---|---|
| AUDI 8A0260403AC | 359x499x48 | |

## 814302 ALM

| | | |
|---|---|---|
| HONDA 80110SV1A11 | 563x318 | |

## 814298 ALM

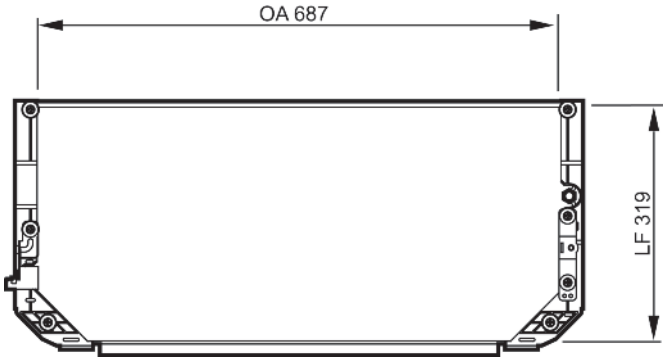


| | | |
|---|---|---|
| TOYOTA 8846002050 | 687x319 | |

## 814303 ALM

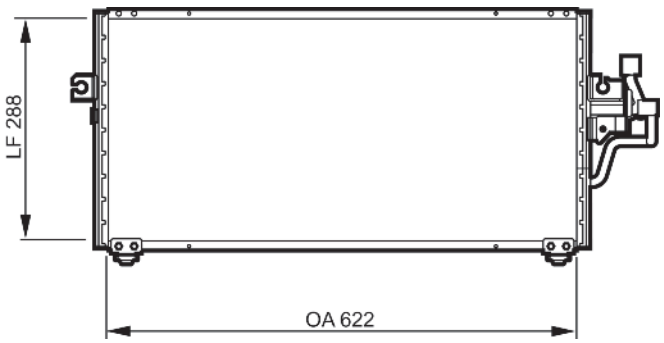


| | | |
|---|---|---|
| MITSUBISHI MR218428 | 622x288 | |

## 814304 ALM

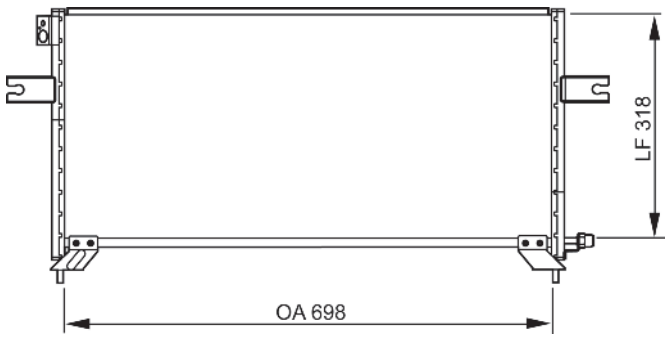


| | | | |
|---|---|---|---|
| NISSAN | 92110VJ200 | 698x318x16 | |

## 814305 ALM

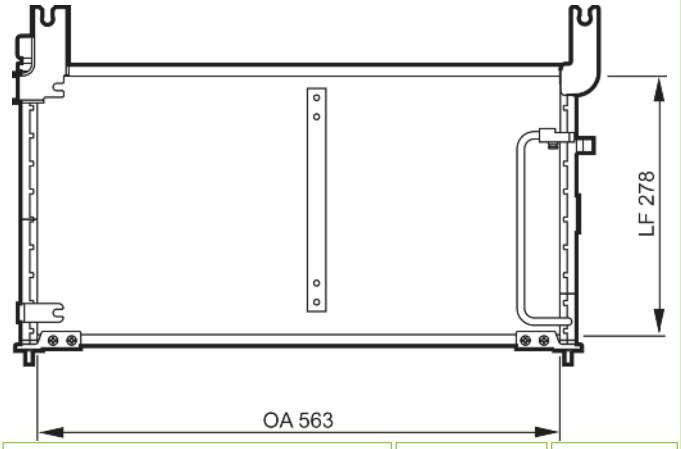


| | | | |
|---|---|---|---|
| SUZUKI | 9531060G41 | 563x278x16 | |

## 814306 ALM

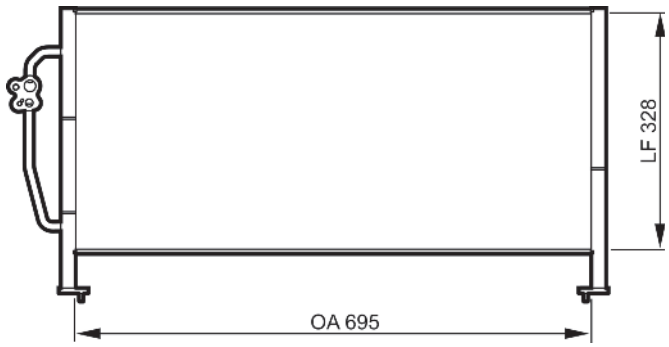


| | | | |
|---|---|---|---|
| SUBARU | 73210FC000 | 695x328x16 | |

## 814307 ALM

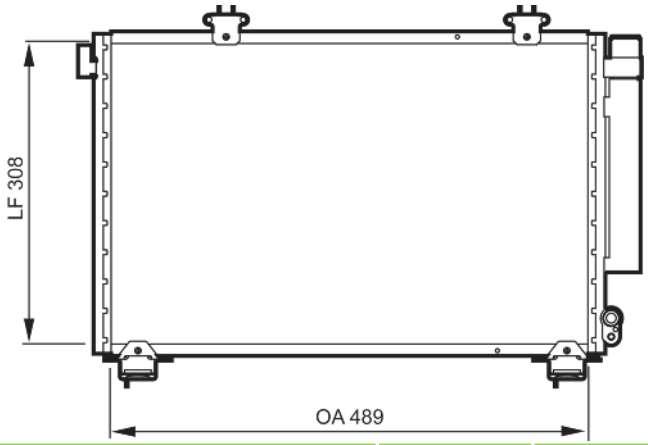


| | | | |
|---|---|---|---|
| TOYOTA | 8846052010 | 489x308x16 | |

## 814308 ALM

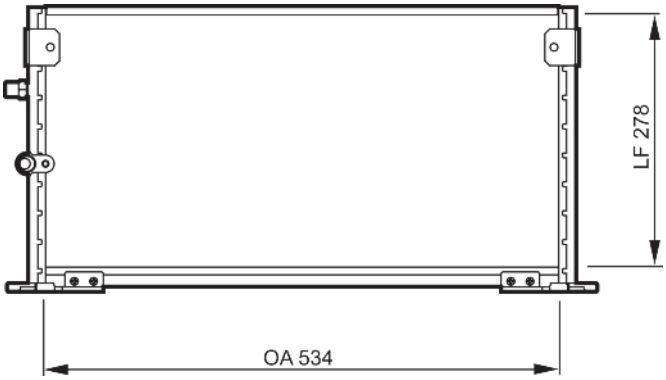


| | | | |
|---|---|---|---|
| TOYOTA | 8846035200 | 534x278x16 | |

## 814309 ALM

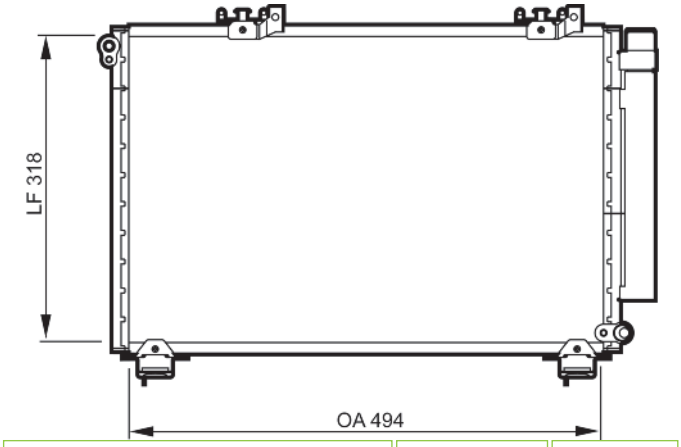


| | | | |
|---|---|---|---|
| TOYOTA | 8846052040 | 494x318 | |

## 814310 ALM

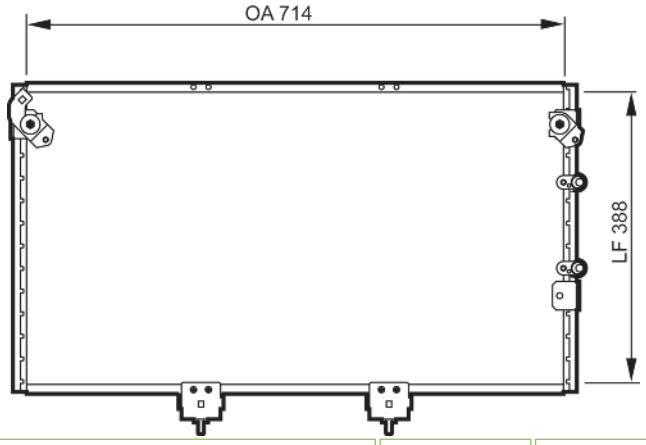


| | | |
|---|---|---|
| LEXUS 8846050120 | 714x388x16 | |

## 814314 ALM

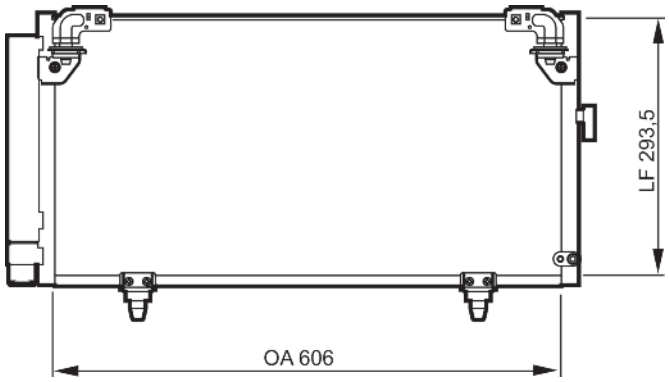


| | | |
|---|---|---|
| SUBARU 73210AG000 | 606x293,5x16 | |

## 814311 ALM

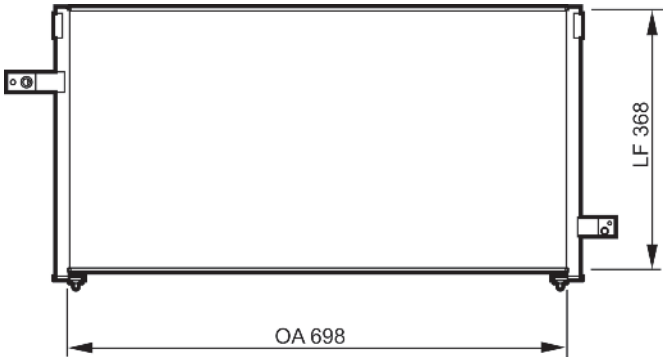


| | | |
|---|---|---|
| SUBARU 73210FC050 | 698x368x16 | |

## 814315 ALM

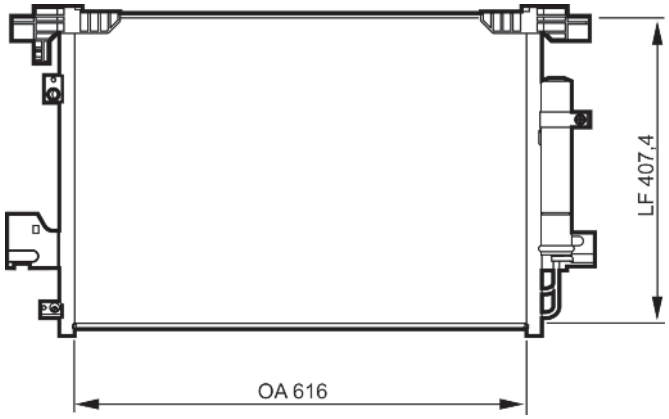


| | | |
|---|---|---|
| CITROEN 6455FA | 616x407,4x16 | |

## 814312 ALM

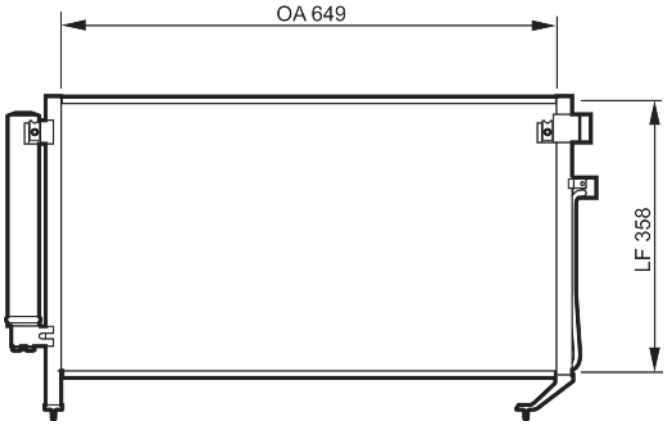


| | | |
|---|---|---|
| SUBARU 73210SA011 | 649x358x16 | |

## 814316 ALM

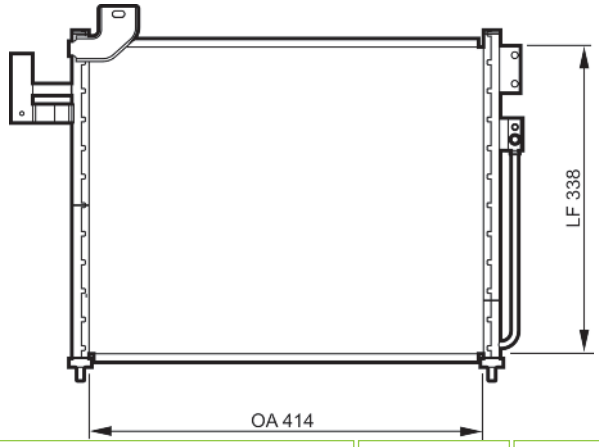


| | | |
|---|---|---|
| MAZDA CB0561480B | 414x338x16 | |

## 814317 ALM

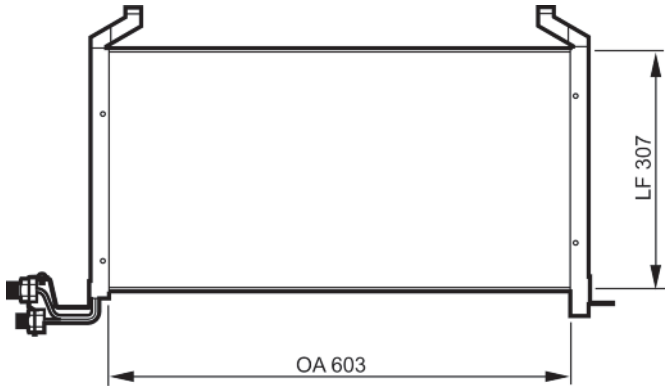


| | | |
|---|---|---|
| SAAB 4382396 | 603x307x22 | |

## 816555 TA518 ALM

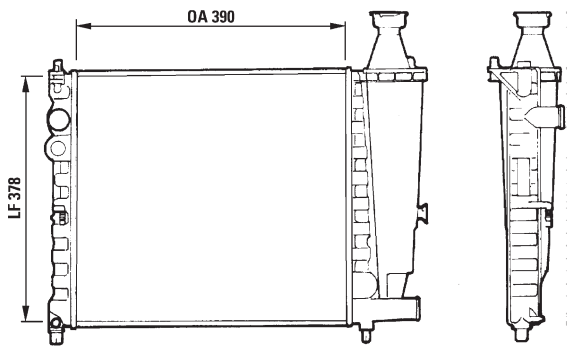


| | | |
|---|---|---|
| PEUGEOT 1300N9 | 390x377,5x34 | 32mm L |
| | | 32mm L |

## 816552 TA505 ALM

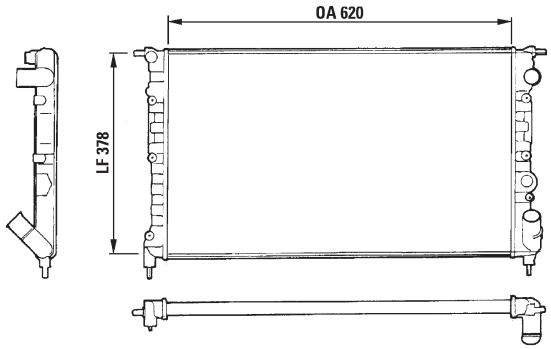


| | | |
|---|---|---|
| RENAULT 7700795175 | 620x377,5x23 | L |
| | | L |

## 816597 HA046 ALB

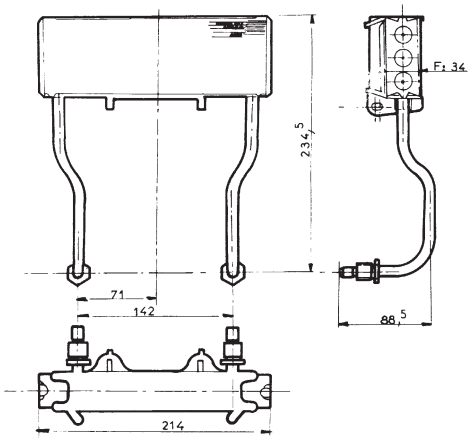


| | | |
|---|---|---|
| CITROEN 5440576 | 156x72x34 | |

## 816554 TA482 ALM

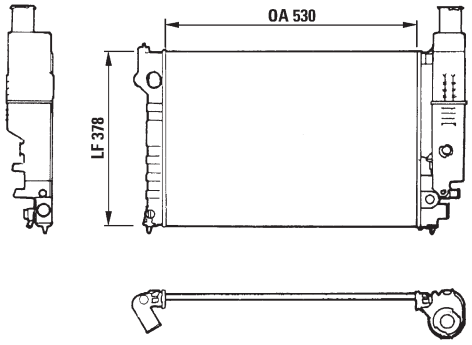


| | | |
|---|---|---|
| CITROEN 1300L9<br>PEUGEOT 1300L9 | 530x378x23 | 32mm L |
| | | 32mm L |

## 816646 ALM

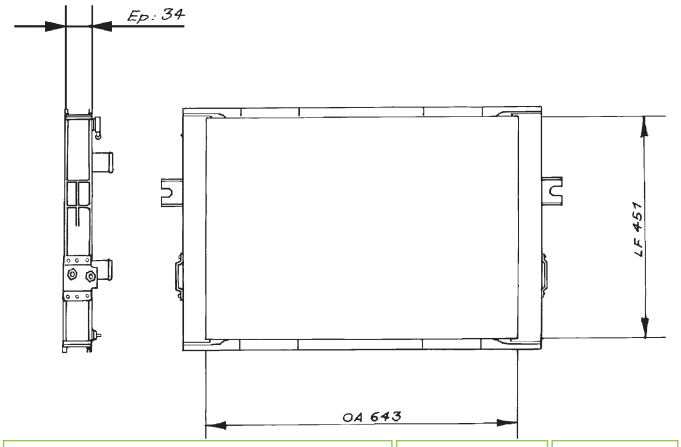


| | | |
|---|---|---|
| IVECO 93808688 | 653x451x34 | 38mm L |
| | | 38mm L |

## 816647 ALM

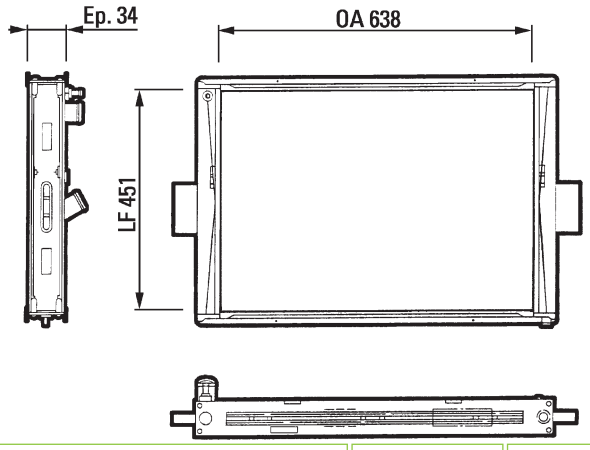


| | | | |
|---|---|---|---|
| IVECO | 1907918 | 638x451x34 | 38mm L |
| | | | 38mm L |

## 816655 TA487 ALM

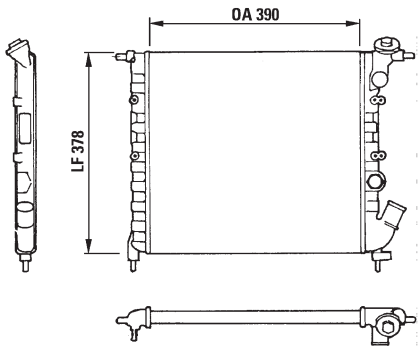


| | | | |
|---|---|---|---|
| RENAULT | 7700805486 | 390x377,5x34 | 32mm L |
| | | | 32mm L |

## 816649 ALM

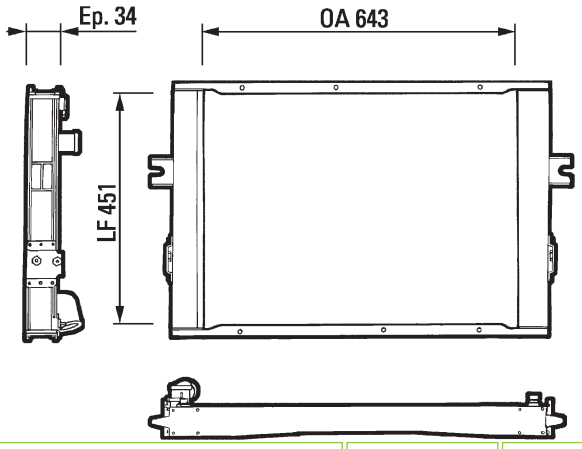


| | | | |
|---|---|---|---|
| IVECO | 93822906 | 643x452x34 | 38mm L |
| | | | 38mm L |

## 816656 TA512 ALM

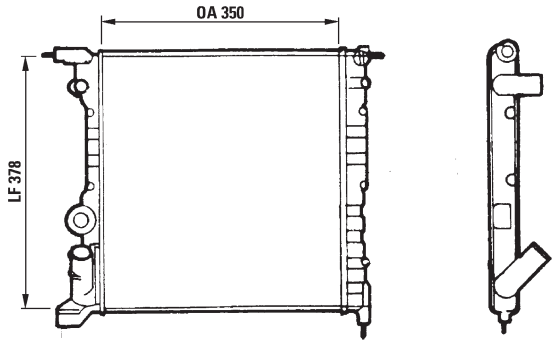


| | | | |
|---|---|---|---|
| RENAULT | 7701034768 | 350x377,5x23 | 32mm L |
| | | | 32mm L |

## 816654 TA511 ALM

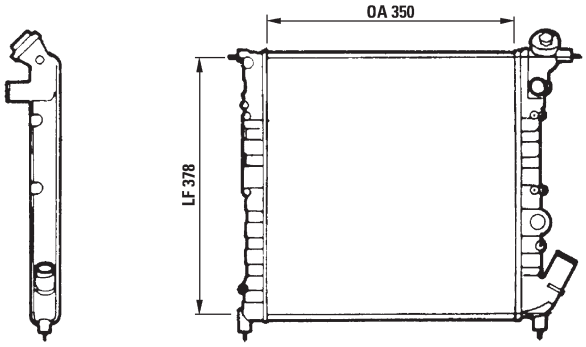


| | | | |
|---|---|---|---|
| RENAULT | 7701034767 | 350x377,5x23 | 32mm L |
| | | | 32mm L |

## 816657 TA513 ALM

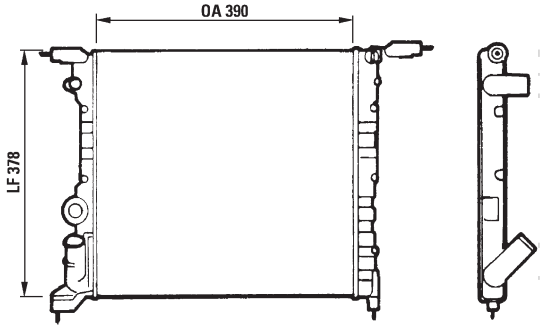


| | | | |
|---|---|---|---|
| RENAULT | 7701034770 | 390x377,5x23 | 32mm L |
| | | | 32mm L |

## 816658 RM1164 ALM

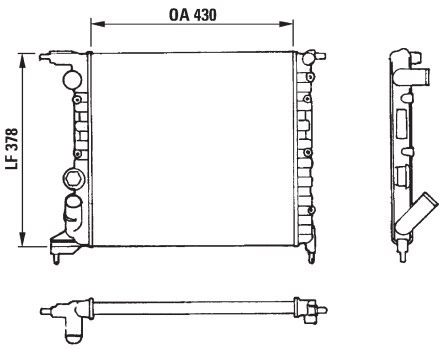


| | | |
|---|---|---|
| RENAULT 7701047886 | 430x377,5x23 | 32mm L |
| | | 32mm L |

## 816703 TA628 ALM

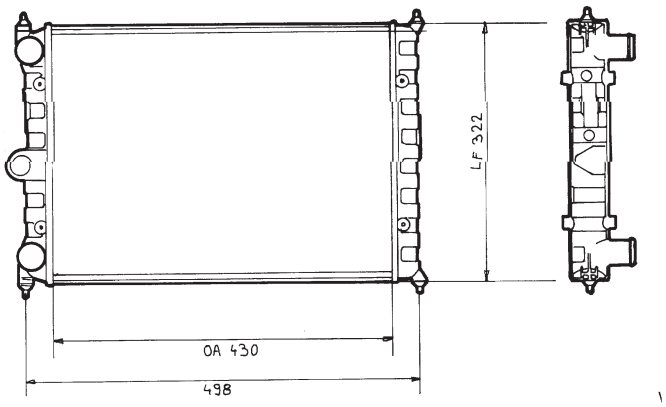


| | | |
|---|---|---|
| VOLKSWAGEN 867121253L | 430x322x34 | 32mm L |
| | | 32mm L |

## 816666 HA1124 ALB

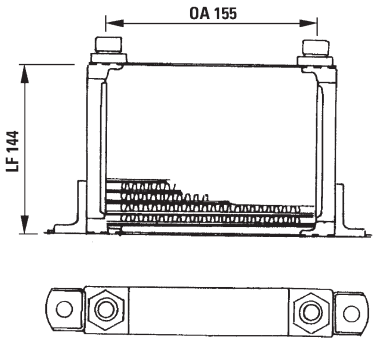


| | | |
|---|---|---|
| FIAT 46538495<br>LANCIA 46469281 | 155x144x40 | |
| | | |

## 816706 TA849 ALM

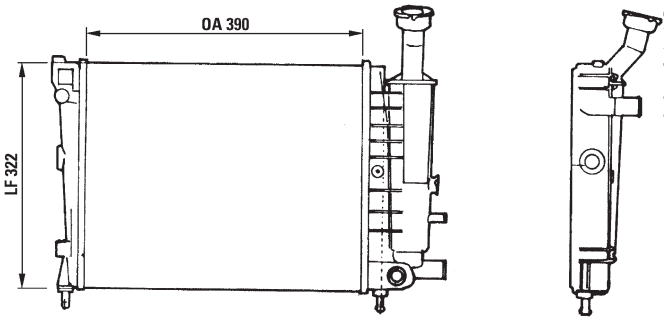


| | | |
|---|---|---|
| CITROEN 95659648 | 390x322x34 | 28mm L |
| | | 28mm L |

## 816700 TA235 ALM

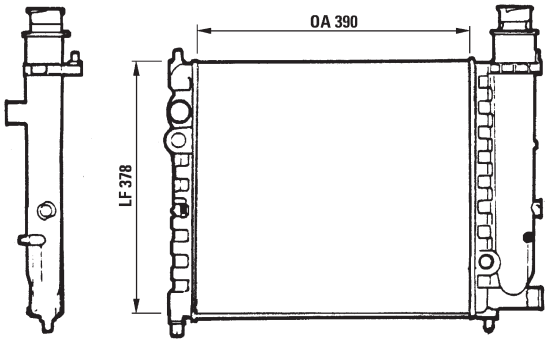


| | | |
|---|---|---|
| PEUGEOT 1300N8 | 390x377,5x34 | 32mm L |
| | | 32mm L |

## 816707 TA591 ALM

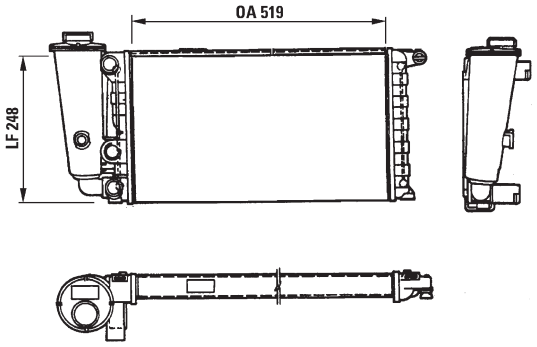


| | | |
|---|---|---|
| AUTOBIANCHI 7711521<br>FIAT 71735368<br>LANCIA 71735368 | 519x248x23 | 26.5mm L |
| | | 26.5mm L |

## 816710 TA563 ALM

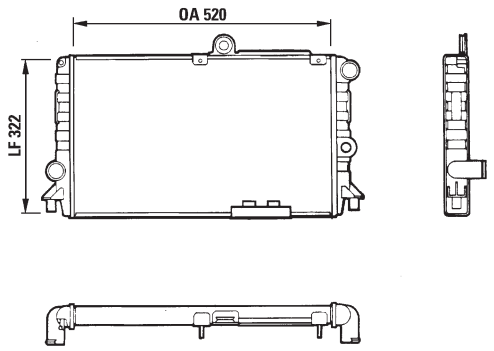


| | | |
|---|---|---|
| ALFA ROMEO 0060538379 | 520x322x34 | 32mm L |
| | | 32mm L |

## 816748 HA054 ALB

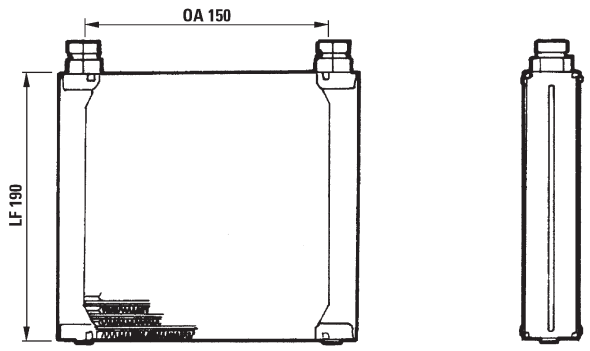


| | | |
|---|---|---|
| RENAULT 7700745281 | 150x190x34 | |

## 816715 RM003 ALM

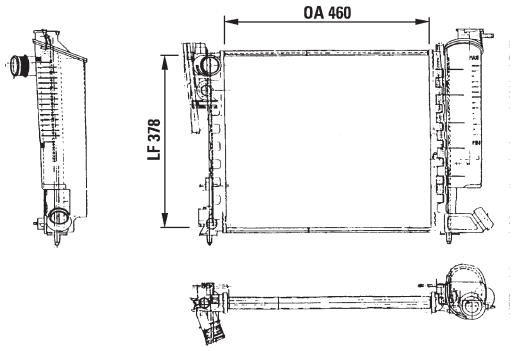


| | | |
|---|---|---|
| CITROEN 1301TG<br>PEUGEOT 1301TG | 460x377,5x23 | 40mm L |
| | | 40mm QC |

## 816756 CA1015

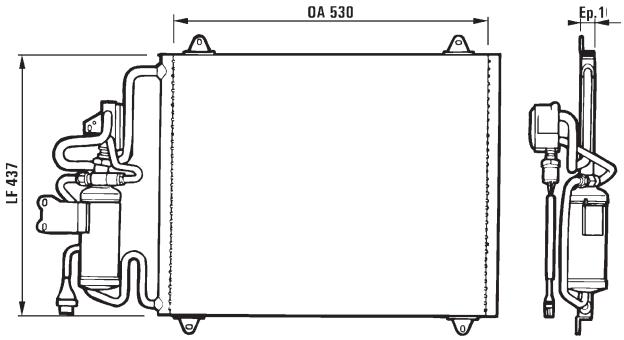


| | | |
|---|---|---|
| RENAULT 7701204955 | 530x437 | |

## 816716 TA605 ALM

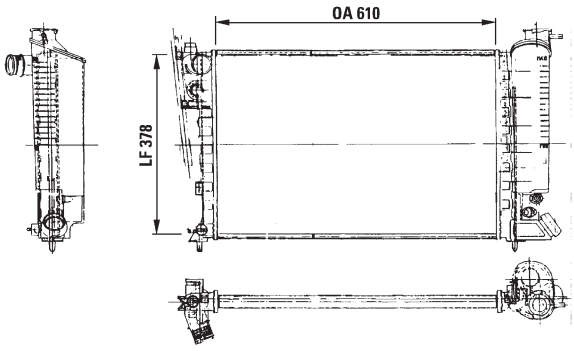


| | | |
|---|---|---|
| CITROEN 9607690980 | 610x377,5x23 | 40mm L |
| | | 40mm QC |

## 816803 CA1014

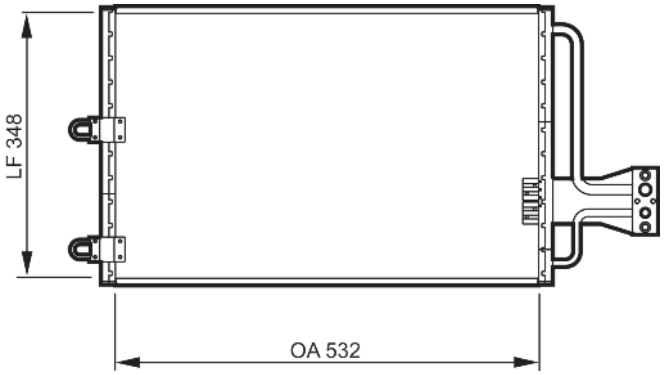


| | | |
|---|---|---|
| CITROEN 6453V5 | 555x351x16 | |

## 816835 CA003

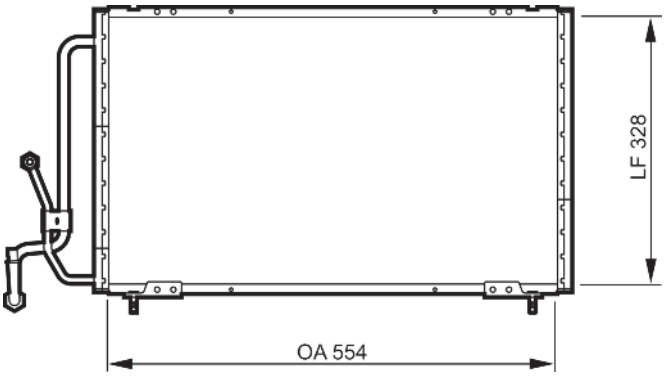


| | | |
|---|---|---|
| PEUGEOT 6455R3 | 552x352x16 | |

## 816850 CA004

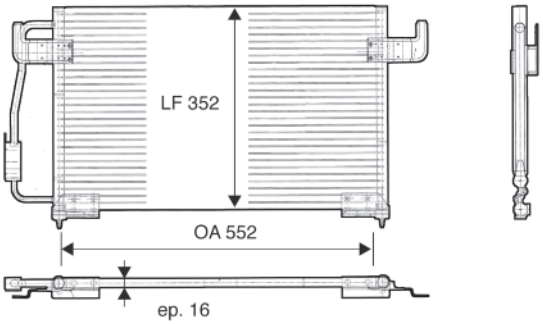


| | | |
|---|---|---|
| CITROEN 6455Y6<br>PEUGEOT 6455Y6 | 552x352x16 | |

## 816836 IM1007 ALM

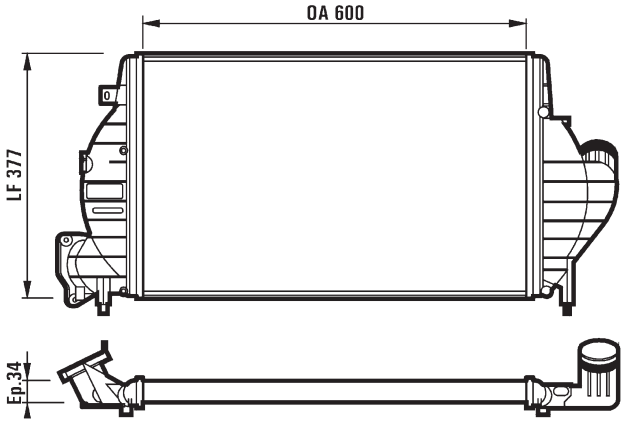


| | | |
|---|---|---|
| RENAULT 7701040663 | 600x377x34 | L |
| | -temp.sensor | B |

## 816851 IM002 ALM

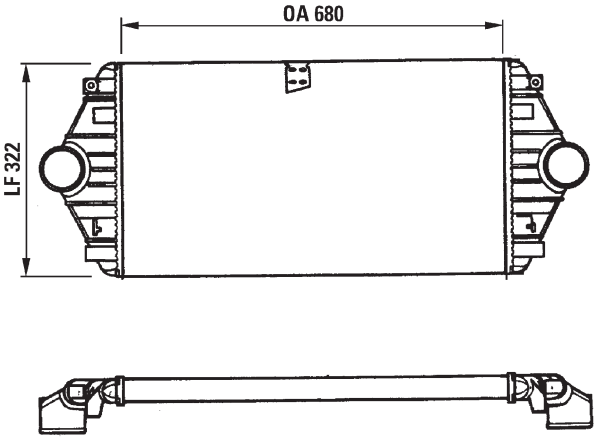


| | | |
|---|---|---|
| CITROEN 0384E7<br>FIAT 1472059080<br>LANCIA 1472059080<br>PEUGEOT 0384E7 | 680x322x34 | 73mm L |
| | -temp.sensor | 73mm L |

## 816839 CA1004

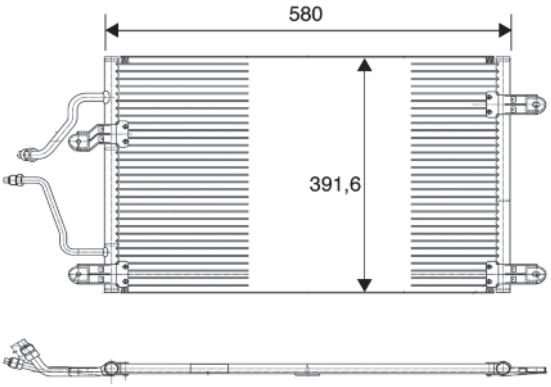


| | | |
|---|---|---|
| RENAULT 7701204731 | 540x391x16 | |

## 816852 CA006

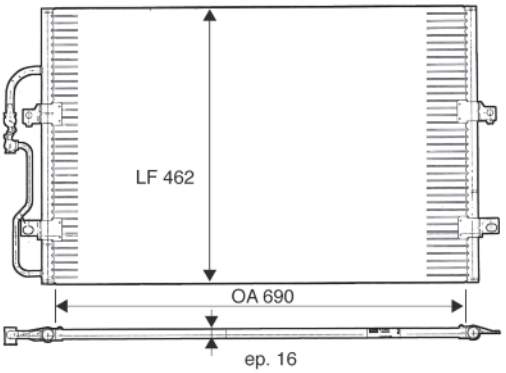


| | | |
|---|---|---|
| CITROEN 6455Y3<br>FIAT 1486721080<br>LANCIA 1486721080<br>PEUGEOT 6455Y3 | 690x462x16 | |

## 816863 CA1007

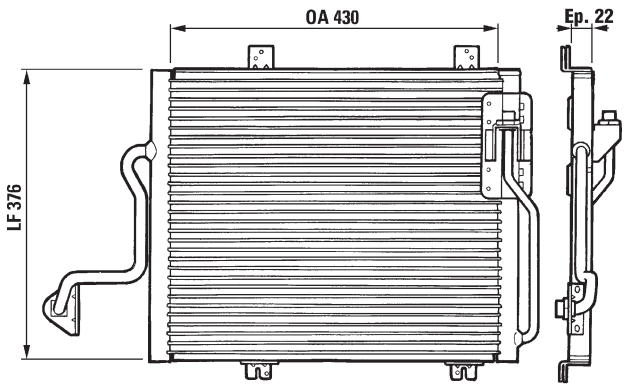


| | | |
|---|---|---|
| RENAULT 7700272488 | 430x376x22 | |

## 816867 CBS

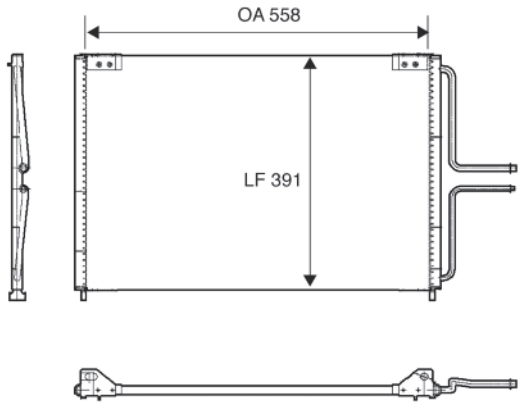


| | | |
|---|---|---|
| RENAULT 7700876215 | 558x391x25 | |

## 816865 CA1002

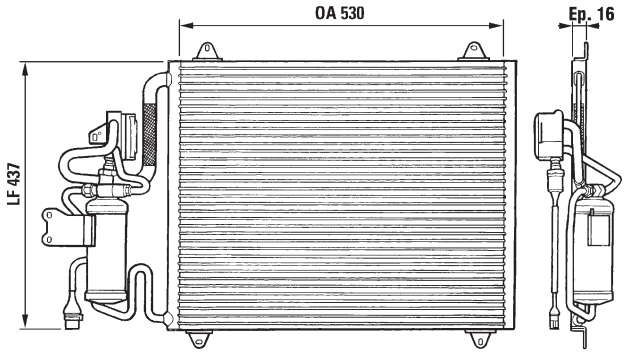


| | | |
|---|---|---|
| RENAULT 7701039742 | 530x437x16 | |

## 816889 IM1003 ALM

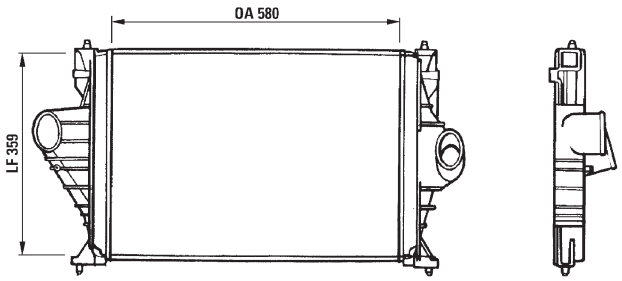


| | | |
|---|---|---|
| CITROEN 0384E8 | 580x359x34 | 45x67mm L |
| | -temp.sensor | 45x67mm L |

## 816866 CA1013

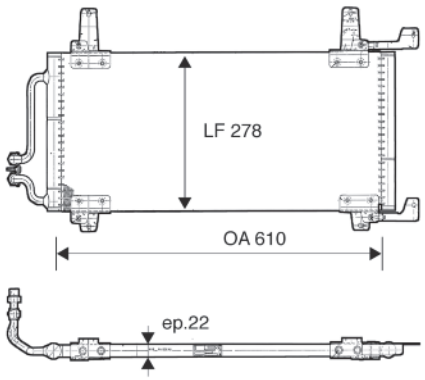


| | | |
|---|---|---|
| RENAULT 7700840853 | 610x278x22 | |

## 816890 IA1031 ALB

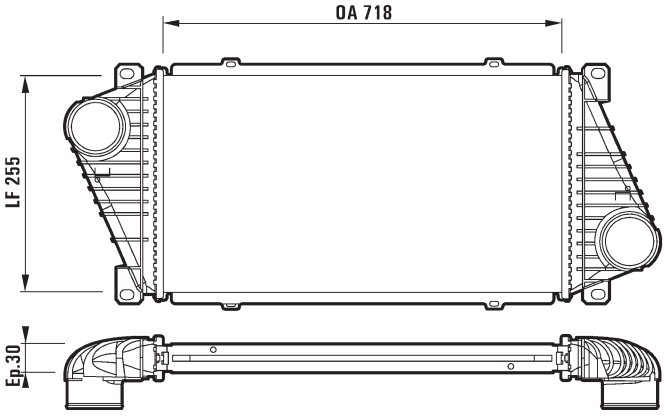


| | | |
|---|---|---|
| MERCEDES 9015010701<br>VOLKSWAGEN 2D0145805D | 718x254x30 | 65mm L |
| | -temp.sensor | 65mm L |

## 816891 CA1031

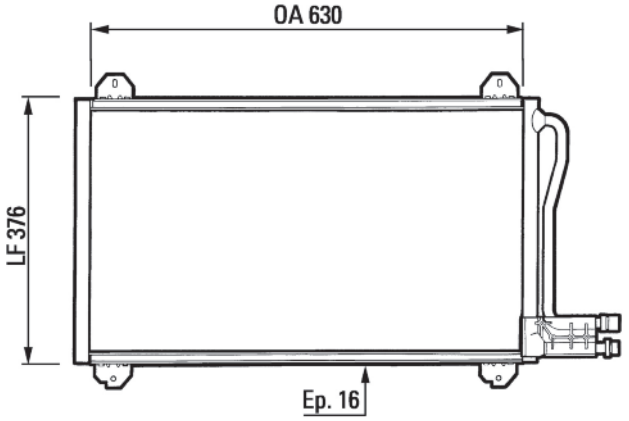


| | | |
|---|---|---|
| MERCEDES 9015000554 | 630x376x16 | |

## 816908 CBS

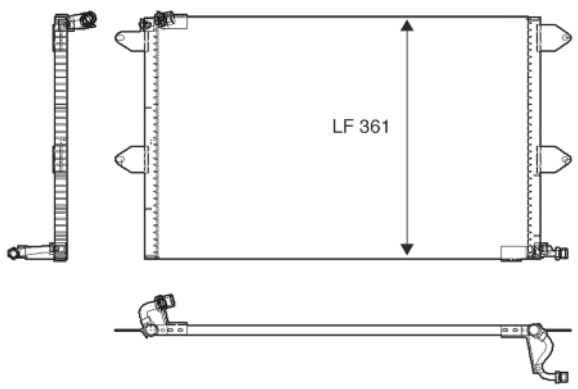


| | | |
|---|---|---|
| SEAT 6K0820413B | 550x350x25 | |

## 816900 CBS

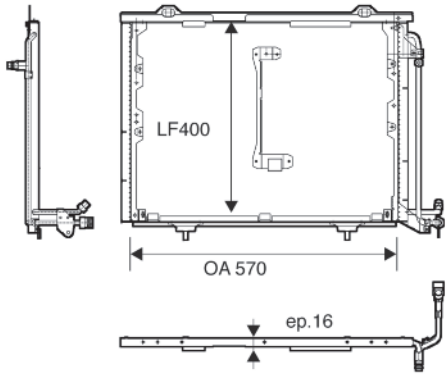


| | | |
|---|---|---|
| MERCEDES 2028300870 | 570x400x25 | |

## 816910 CBS

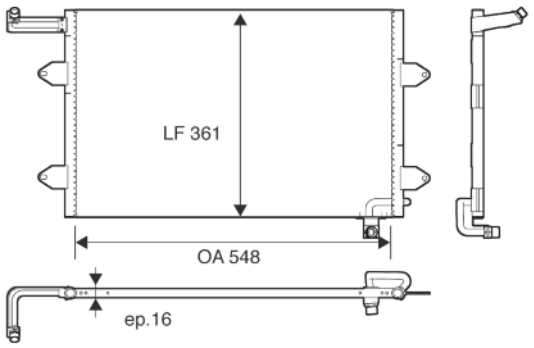


| | | |
|---|---|---|
| VOLKSWAGEN 1H0820413 | 548x361x25 | |

## 816902 CA1197

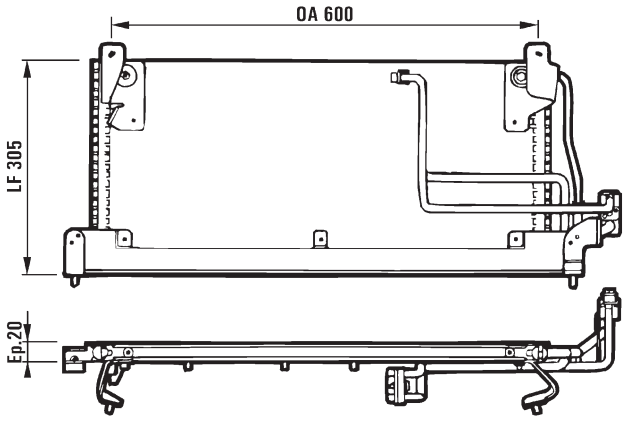


| | | |
|---|---|---|
| OPEL 1618081<br>OPEL 1618108<br>VAUXHALL 90511659<br>VAUXHALL 93250611 | 600x305x20 | |

## 816912 CA1115

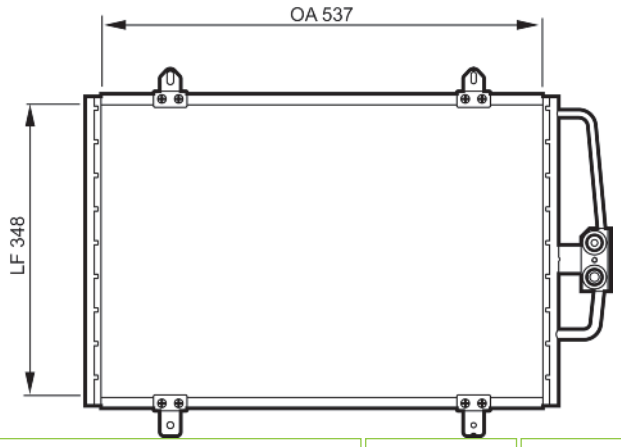


| | | |
|---|---|---|
| RENAULT 7700432391 | 520x388x22 | |

## 816918 IM1002 ALM

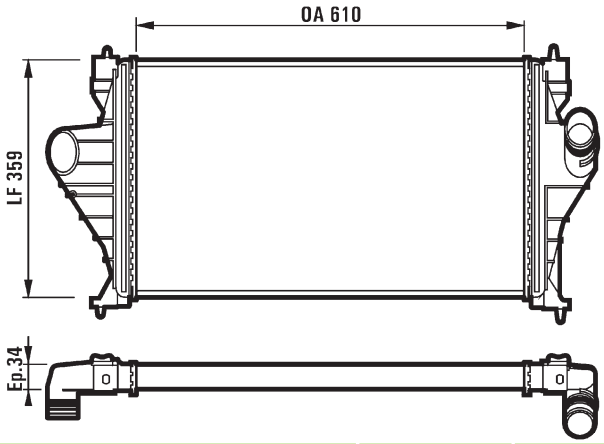


| | | |
|---|---|---|
| PEUGEOT 0384F4 | 610x359x34 | 67x45mm L |
| | -temp.sensor | 67x45mm L |

## 816922 ALM

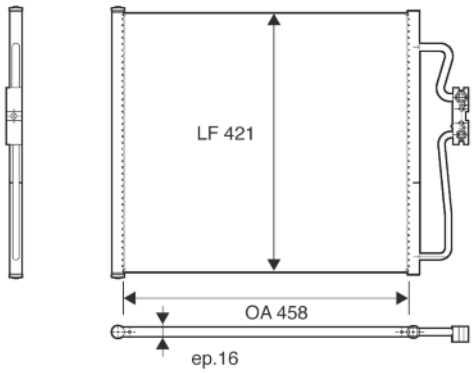


| | | |
|---|---|---|
| BMW 64538373924 | 458x421x25 | |

## 816919 IM1006 ALM

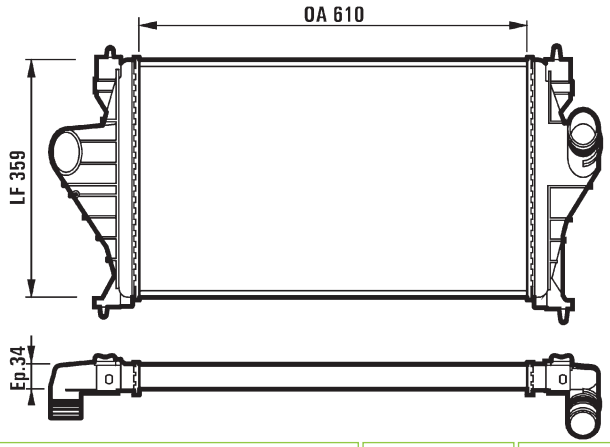


| | | |
|---|---|---|
| CITROEN 0384F1<br>PEUGEOT 0384F1 | 610x359x34 | 67x45mm L |
| | -temp.sensor | 67x45mm L |

## 816924 CA1202

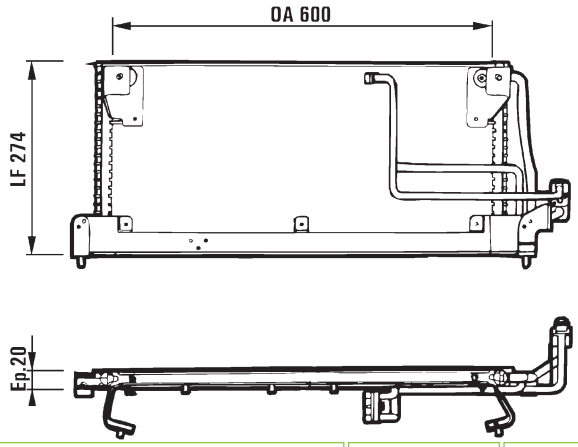


| | | |
|---|---|---|
| OPEL 1618109<br>VAUXHALL 90541114 | 600x274x20 | |

## 816921 CA1011

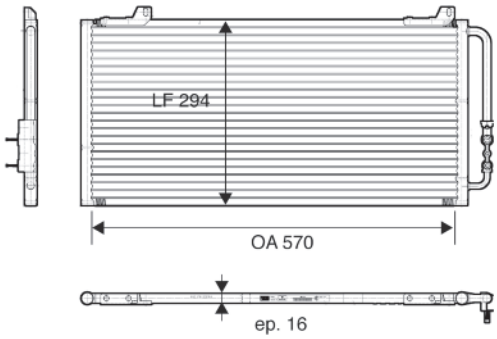


| | | |
|---|---|---|
| ROVER JRB100310 | 570x294x16 | |

## 816945 CA1032

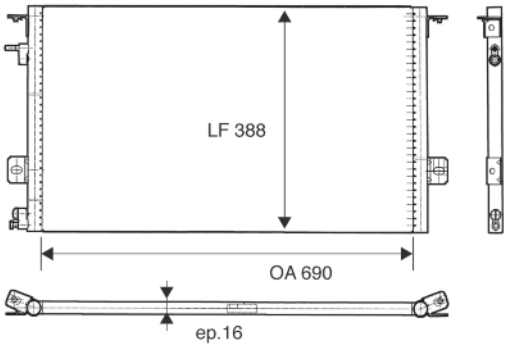


| | | |
|---|---|---|
| CHRYSLER 4798015 | 690x388x16 | |

## 816948 CA1195

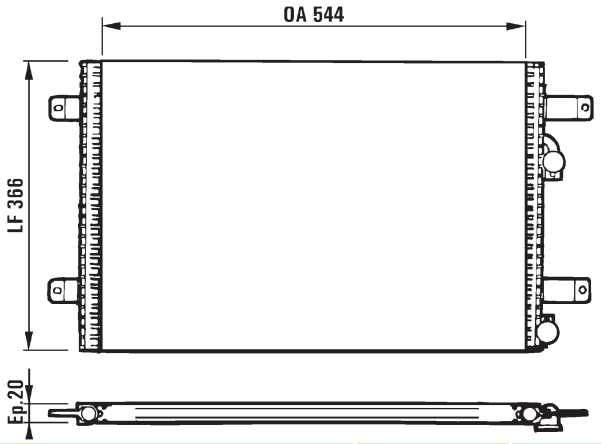


| | | |
|---|---|---|
| FORD 1029057<br>SEAT 7M0820413F<br>VOLKSWAGEN 7M0820413F | 544x366x20 | |

## 816962

Picture not available
Image non disponible
Imagen no disponible
Immagine non disponibile
Nicht verfügbares Bild
Brak zdjęcia
Картина недоступна

| | | |
|---|---|---|
| RENAULT TRUCKS 5000752789 | 759x406 | |

## 816949 CA1192

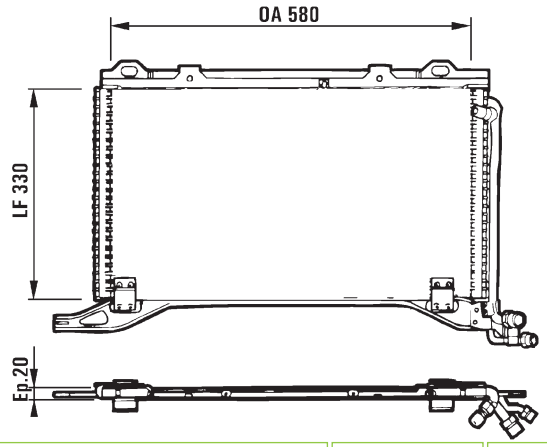


| | | |
|---|---|---|
| MERCEDES 2018300370 | 580x330x20 | |

## 816964 ALM

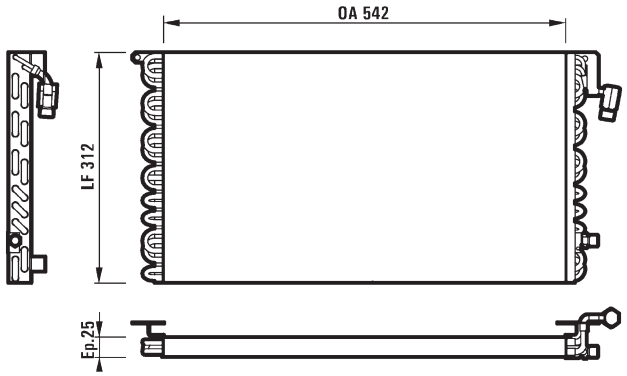


| | | |
|---|---|---|
| CITROEN 6455V0 | 542x312x25 | |

## 816959 IA1036 ALB

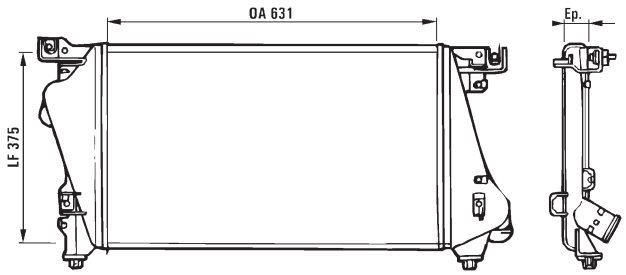


| | | |
|---|---|---|
| CHRYSLER 4798014 | 631x375 | 50mm L |
| | -temp.sensor | 50mm L |

## 816967 ALM

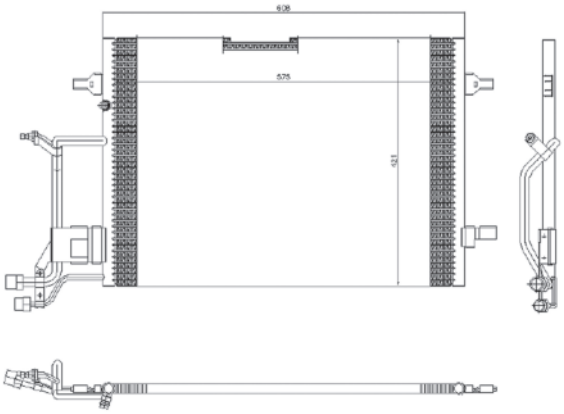

| | | |
|---|---|---|
| AUDI 8D0260403C | 575x421x25 | |

## 816973 CBS

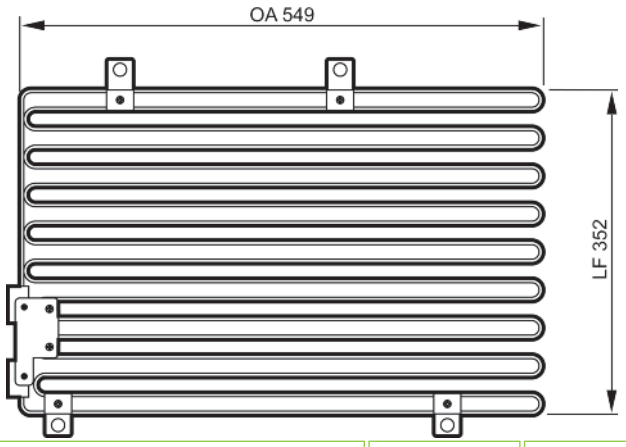


| | | |
|---|---|---|
| ALFA ROMEO 60610662 | 549x352x25 | |

## 816981 CA1190

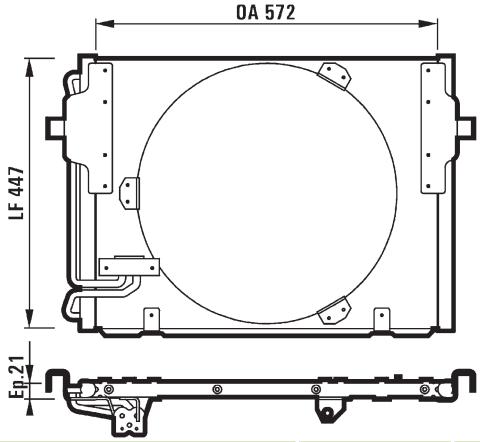


| | | |
|---|---|---|
| BMW 64531392941 | 572x447x21 | |

## 816977 ALM

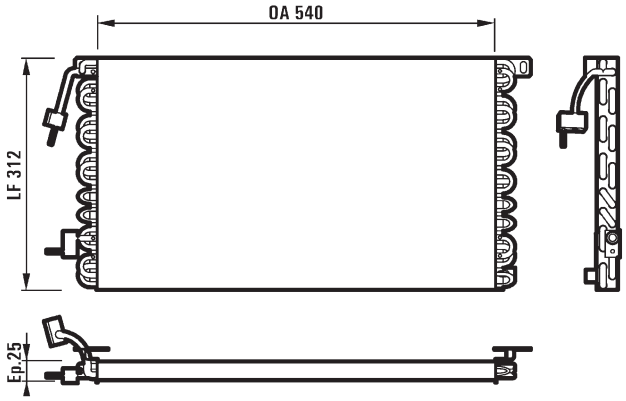


| | | |
|---|---|---|
| PEUGEOT 6455V5 | 540x312x25 | |

## 816984 CA1021

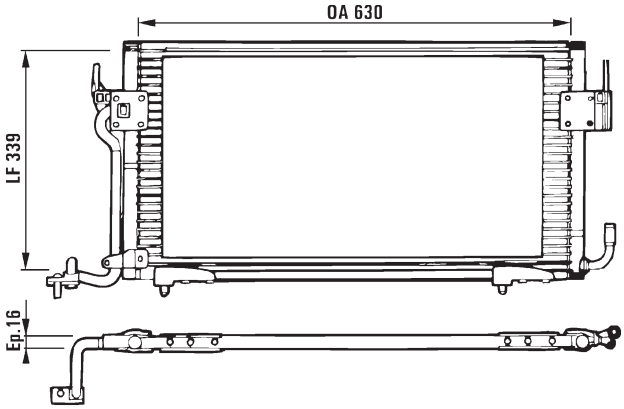


| | | |
|---|---|---|
| CITROEN 6455V8 | 630x339x16 | |

## 816980

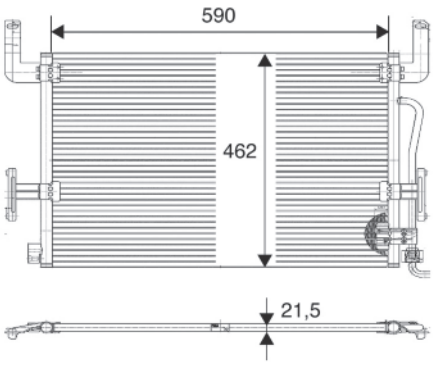


| | | |
|---|---|---|
| RENAULT TRUCKS 5010315281 | 590x462 | |

## 816985 CA1092

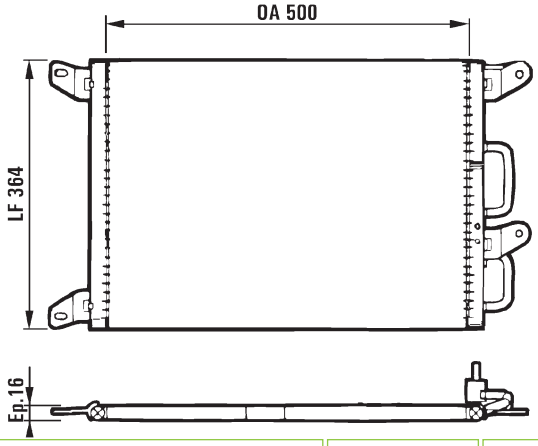


| | | |
|---|---|---|
| FIAT 46440250 | 500x364x16 | |

## 816987 CA1022

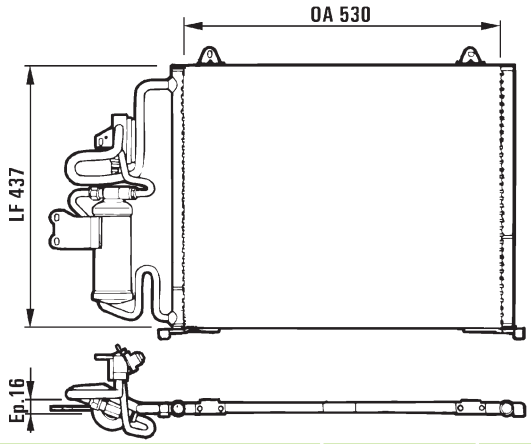


| | | |
|---|---|---|
| RENAULT 7701205214 | 530x437x16 | |

## 817011 ALM

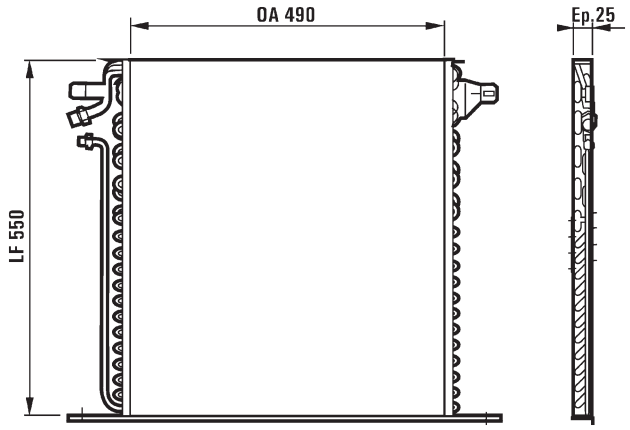


| | | |
|---|---|---|
| MERCEDES 6388350170 | 490x550x25 | |

## 816991 ALM

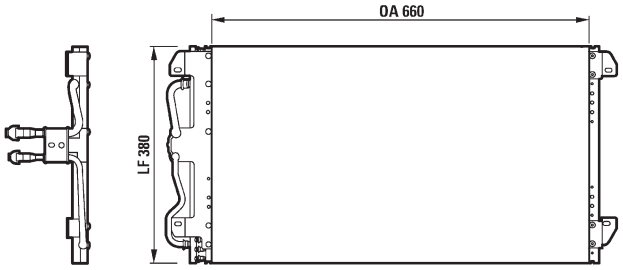


| | | |
|---|---|---|
| CHRYSLER 5011395AA | 660x380 | |

## 817015 ALM

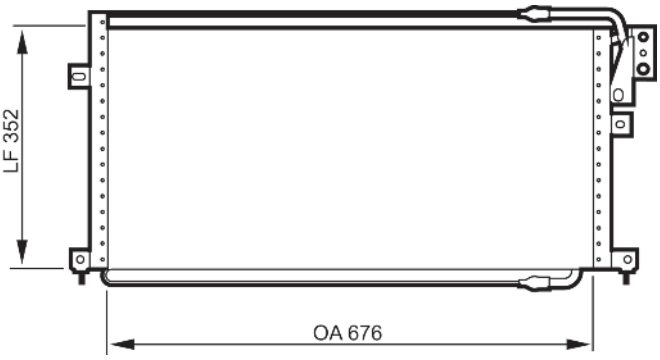


| | | |
|---|---|---|
| CHRYSLER 4644365 | 676x352 | |

## 816996 CA1061

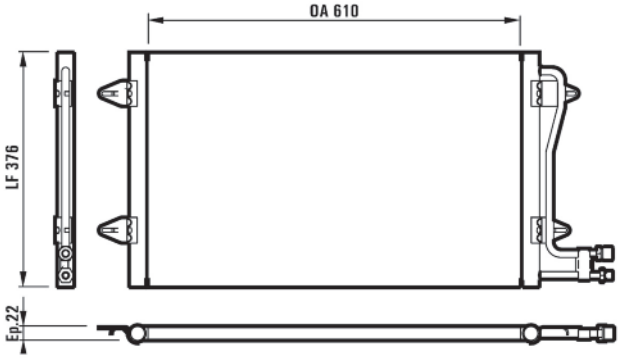


| | | |
|---|---|---|
| VOLKSWAGEN 2D0820413C | 610x376x22 | |

## 817022 ALM

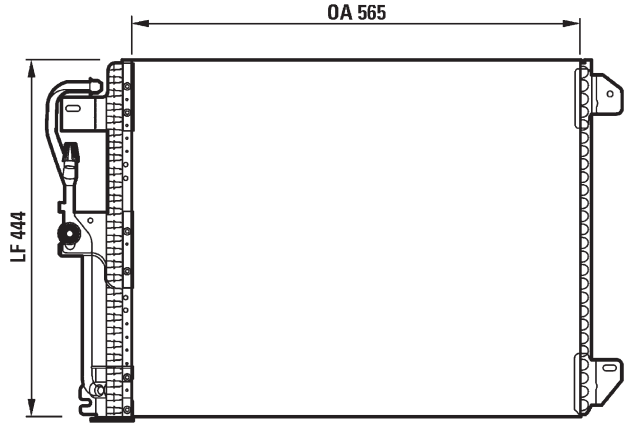


| | | |
|---|---|---|
| JEEP 55115863 | 565x444 | |

## 817023 ALM

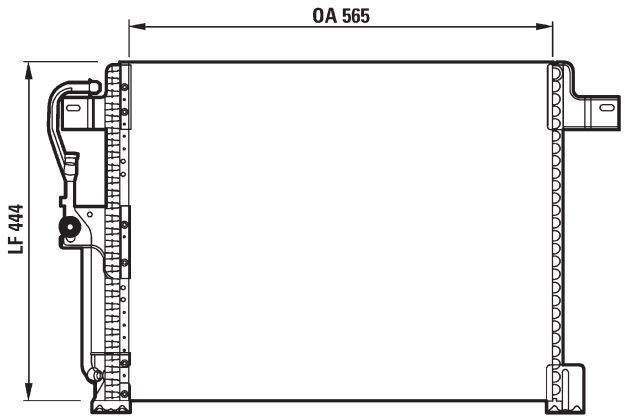


| | | |
|---|---|---|
| JEEP 55115864 | 565x444 | |

## 817061 CA1107

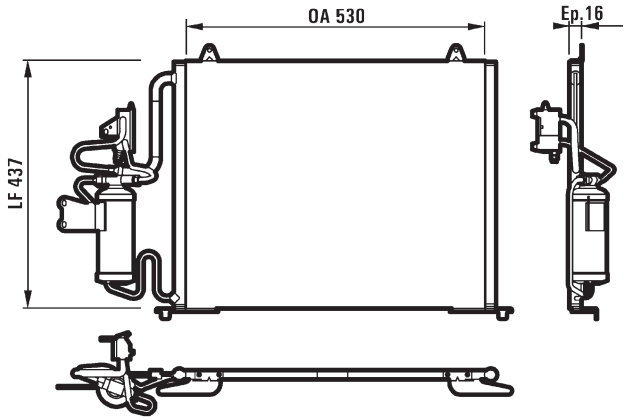


| | | |
|---|---|---|
| RENAULT 7701204841 | 530x437x16 | |

## 817024 ALM

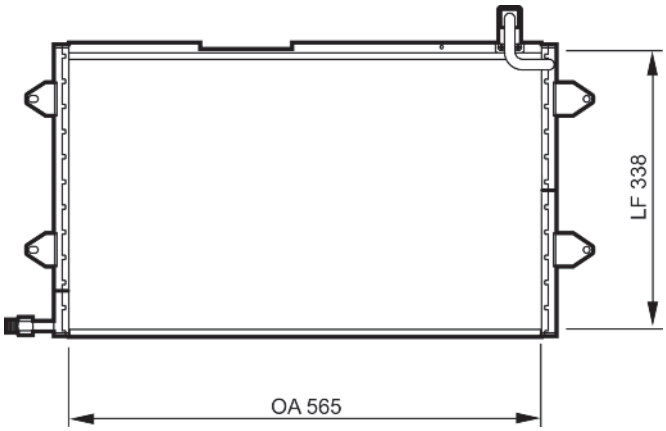


| | | |
|---|---|---|
| VOLKSWAGEN 1HM820413B | 565x338x25 | |

## 817065 CA1029

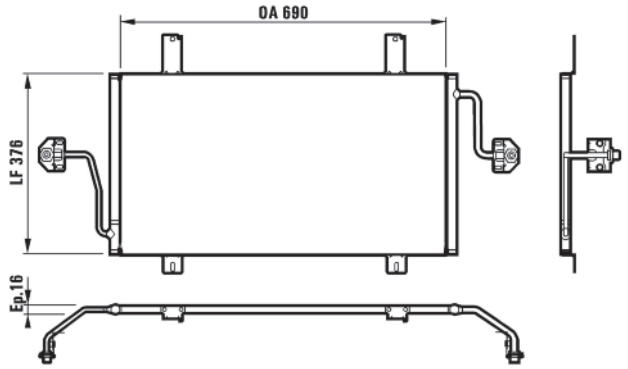


| | | |
|---|---|---|
| RENAULT 7701044406 | 690x376x16 | |

## 817042 CA1093

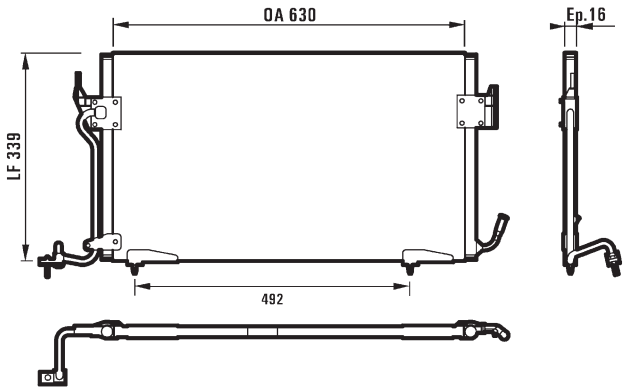


| | | |
|---|---|---|
| CITROEN 6455Y2<br>PEUGEOT 6455Y2 | 630x339x16 | |

## 817067 CA1423

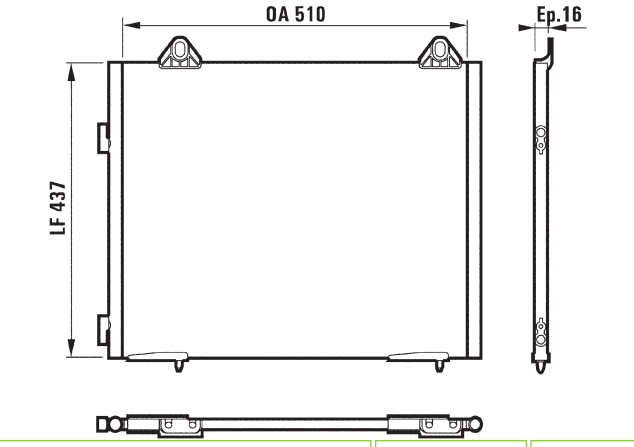


| | | |
|---|---|---|
| LAND ROVER AWR5796 | 510x437x16 | |

## 817073 ALM

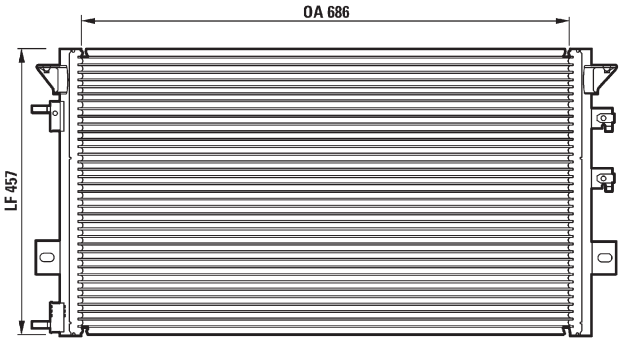


| | | | |
|---|---|---|---|
| CHRYSLER | 4662589 | 686x457x25 | |

## 817115 IA1074 ALB

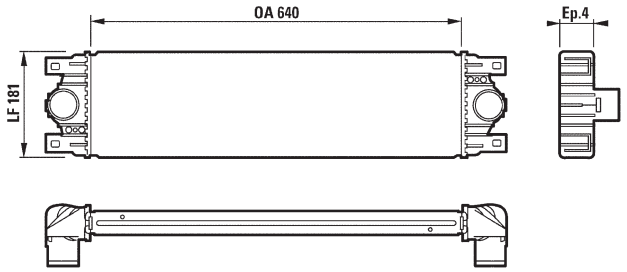


| | | | |
|---|---|---|---|
| OPEL<br>RENAULT<br>VAUXHALL | 4500847<br>7701043695<br>9161147 | 680x181,5x40 | 57mm L |
| | | -temp.sensor | 57mm L |

## 817074 ALM

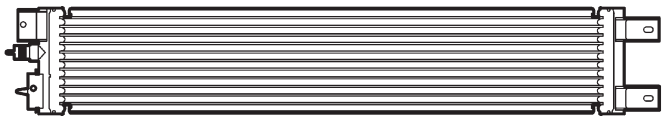

| | | | |
|---|---|---|---|
| CHRYSLER | 4682591 | 685x128 | |

## 817171 CA1094

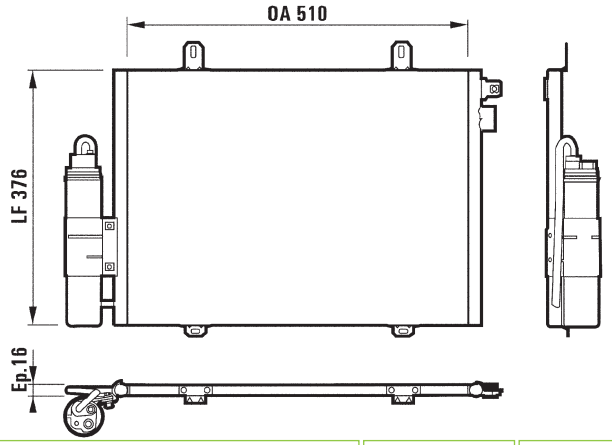


| | | | |
|---|---|---|---|
| RENAULT | 7700414103 | 510x376x16 | |

## 817075 ALM

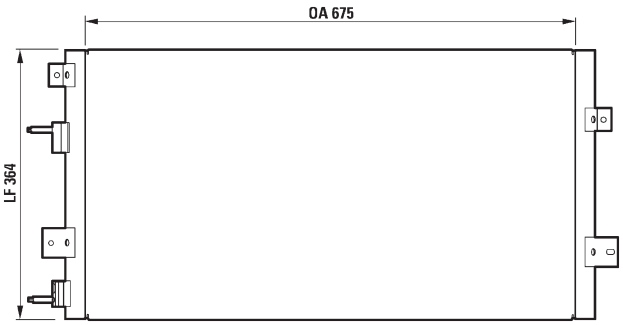


| | | | |
|---|---|---|---|
| CHRYSLER | 4758305 | 692x358 | |

## 817197 CA1247

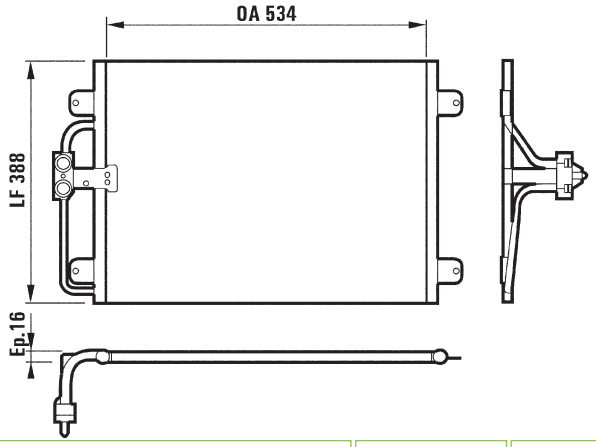


| | | | |
|---|---|---|---|
| RENAULT | 7700432392 | 534x388x16 | |

## 817204 IW002 ALM

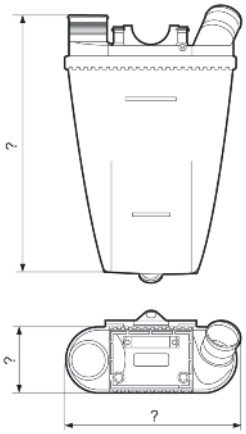


| | | |
|---|---|---|
| CITROEN 0384E5<br>PEUGEOT 0384E5 | 310x126x84 | |
| | -temp.sensor | |

## 817230 ALM

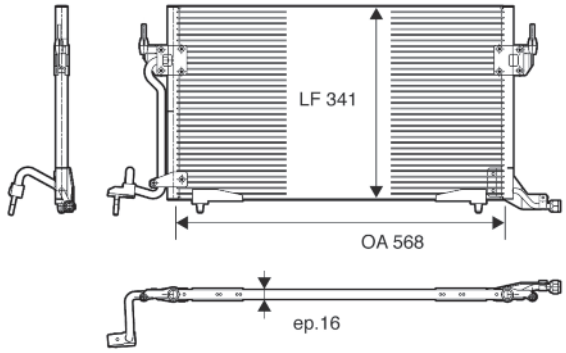


| | | |
|---|---|---|
| CITROEN 6455AV | 568x341x25 | |
| | | |

## 817225 CBS

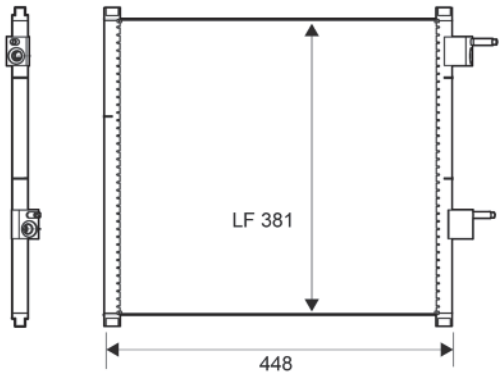


| | | |
|---|---|---|
| FORD 1061104 | 448x381x25 | |
| | | |

## 817232 CBS

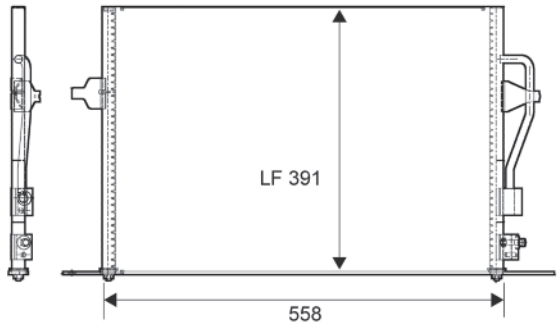


| | | |
|---|---|---|
| FORD 4144369 | 588x391x25 | |
| | | |

## 817229 ALM

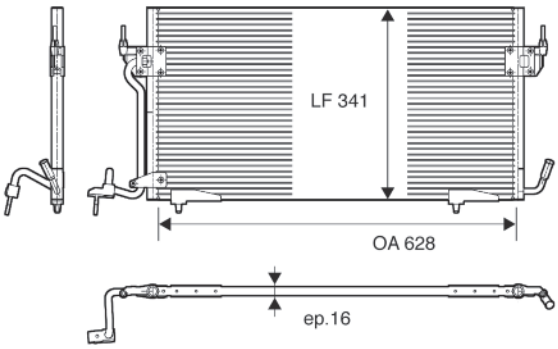


| | | |
|---|---|---|
| CITROEN 6455AW | 628x341x25 | |
| | | |

## 817235 CA1191

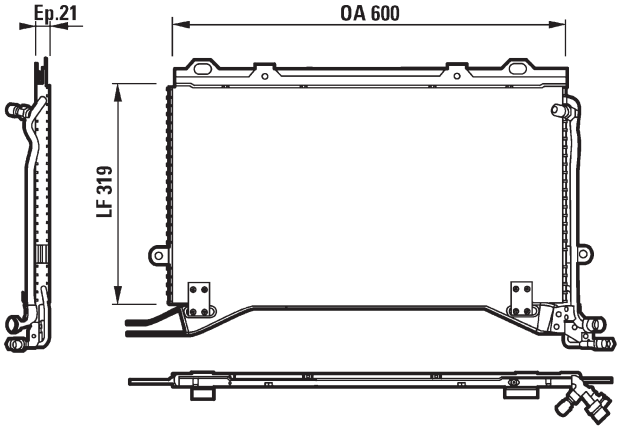


| | | |
|---|---|---|
| MERCEDES 2108300470 | 600x319x21 | |
| | | |

## 817238 IA1181 ALB

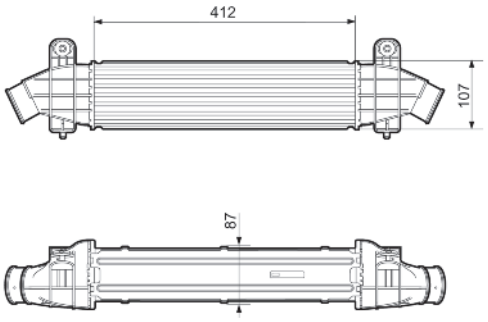


| | | | |
|---|---|---|---|
| FORD | 1124704 | 412x107x87 | 56mm L |
| | | -temp.sensor | 56mm L |

## 817246 CA1207

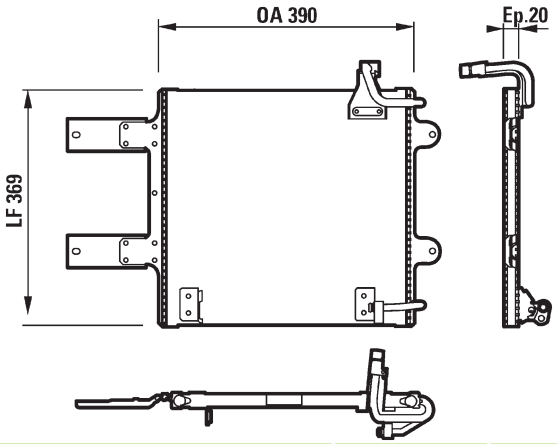


| | | | |
|---|---|---|---|
| SEAT | 6X0820413 | 390x369x20 | |
| VOLKSWAGEN | 6X0820413 | | |

## 817244 CA1206

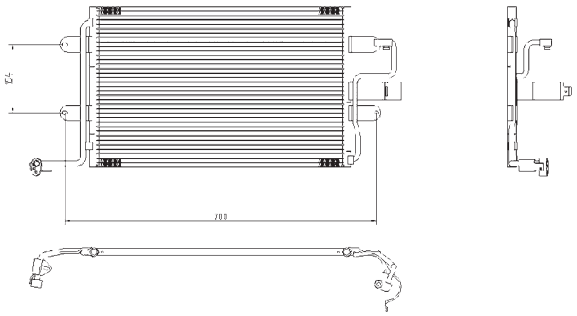

| | | | |
|---|---|---|---|
| AUDI | 1J0820413N | 548x361x16 | |
| SEAT | 1J0820413N | | |
| SKODA | 1J0820413N | | |
| VOLKSWAGEN | 1J0820413N | | |

## 817247 CA1208

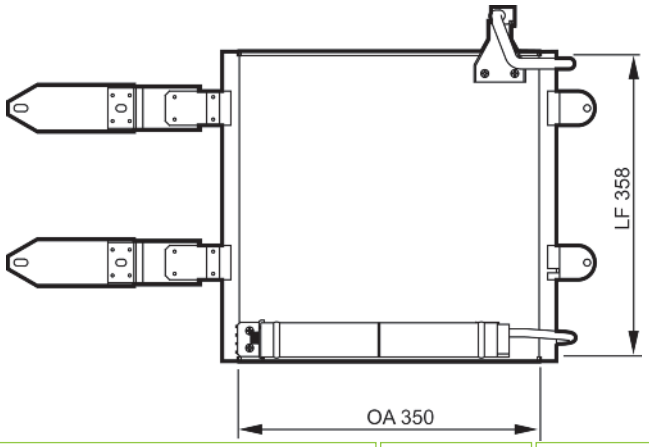


| | | | |
|---|---|---|---|
| SEAT | 6X0820413A | 390x369x20 | |
| VOLKSWAGEN | 6X0820413A | | |

## 817245 CA1209

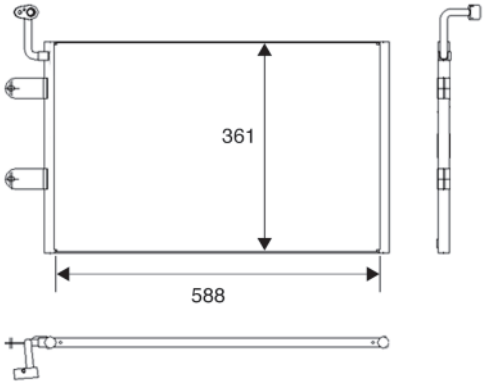


| | | | |
|---|---|---|---|
| SEAT | 6K0820411 | 588x361x22 | |
| SEAT | 6K0820411A | | |

## 817248 ALM

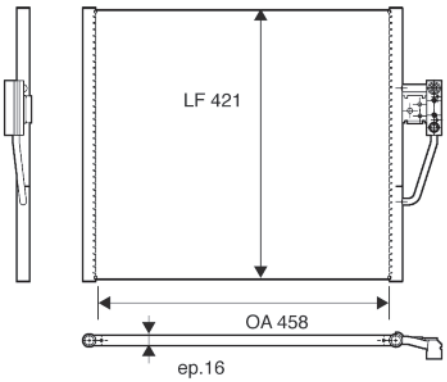


| | | | |
|---|---|---|---|
| BMW | 64538391647 | 458x421x25 | |

## 817252 ALM

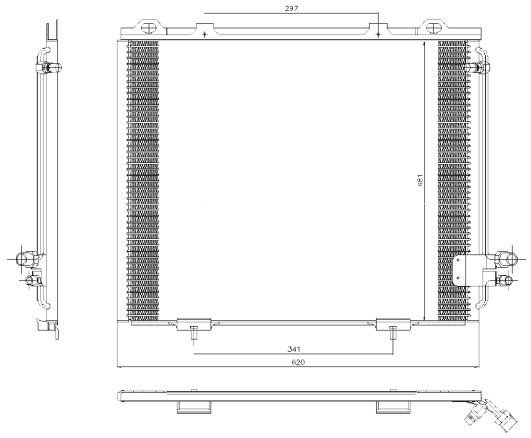

| | | |
|---|---|---|
| MERCEDES 2108300570 | 620x481 | |

## 817276 IA1336 ALB

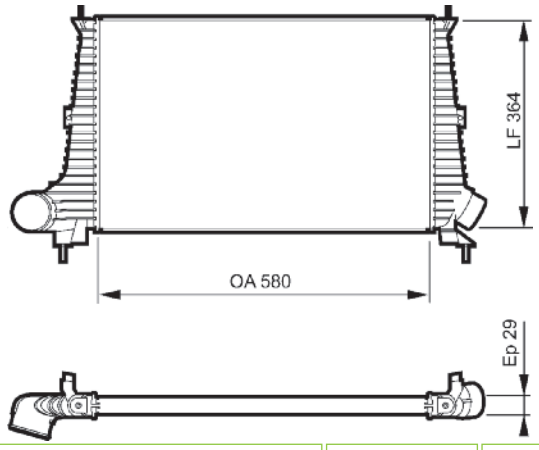


| | | |
|---|---|---|
| SAAB 4726568 | 581x365x32 | 70mm L |
| | -temp.sensor | 70mm L |

## 817253 ALM

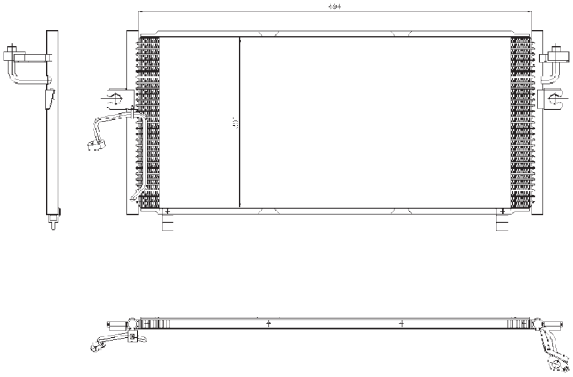

| | | |
|---|---|---|
| NISSAN 921102F000 | 694x301 | |

## 817283 CA1424

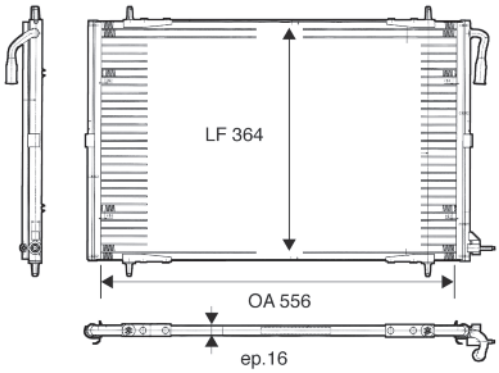


| | | |
|---|---|---|
| PEUGEOT 6455X9<br>PEUGEOT 6455Y0 | 556x364x16 | |

## 817275 IA1335 ALB

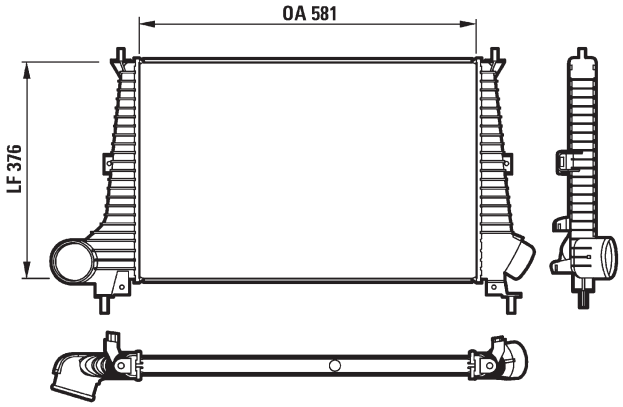


| | | |
|---|---|---|
| SAAB 4576039 | 581x376x25 | 60mm L |
| | -temp.sensor | 60mm L |

## 817288 ALM

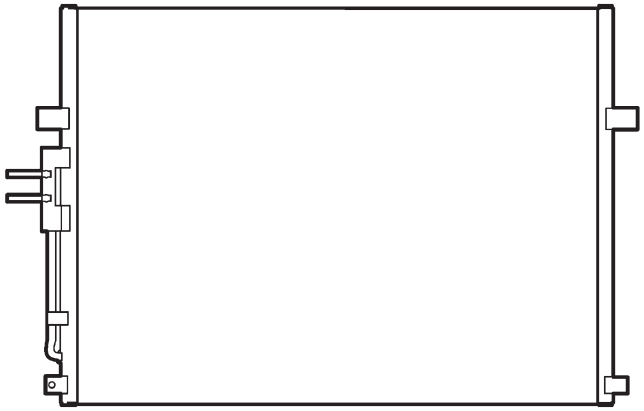

| | | |
|---|---|---|
| JEEP 55115918AB | 616x462x16 | |

## 817372 IM1031 ALM

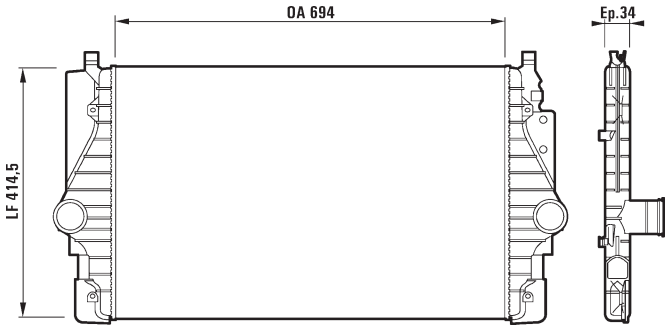


| | | |
|---|---|---|
| VOLKSWAGEN 7D0145805 | 694x414,5x34 | 55mm L |
| | -temp.sensor | 55mm L |

## 817380 IA1007 ALB

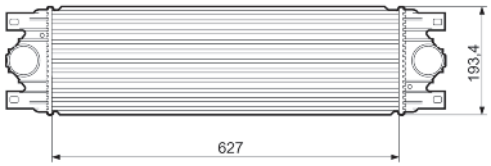


| | | |
|---|---|---|
| RENAULT VI 5010382814 | 627x181,5x40 | 57mm L |
| | -temp.sensor | 57mm L |

## 817375 CA1418

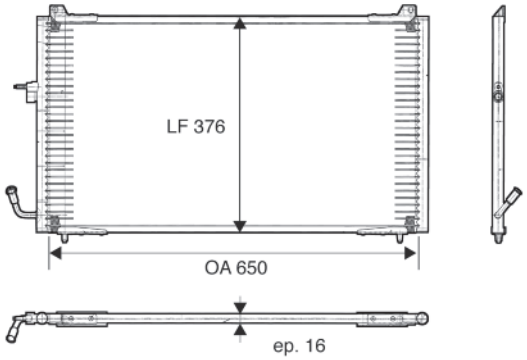


| | | |
|---|---|---|
| PEUGEOT 6453JA | 650x376x16 | |
| | | |

## 817383 ALM

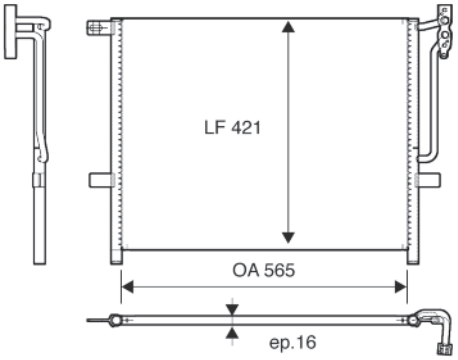


| | | |
|---|---|---|
| BMW 64538377614 | 565x421x16 | |
| | | |

## 817379 CA1108

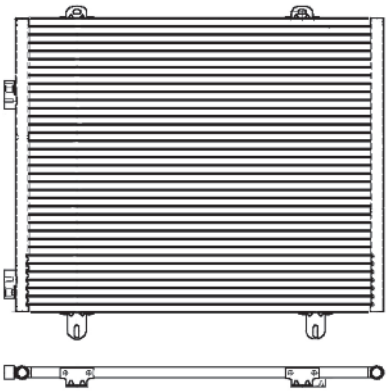

| | | |
|---|---|---|
| RENAULT TRUCKS 5010382644 | 510x437 | |
| | | |

## 817384 CA1120

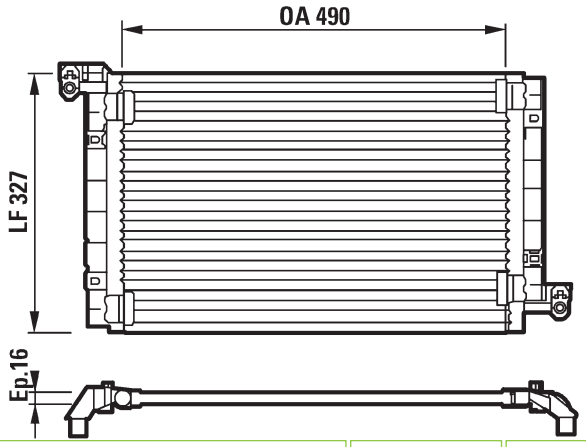


| | | |
|---|---|---|
| FIAT 46754752 | 490x327x16 | |
| | | |

## 817385 CA1261

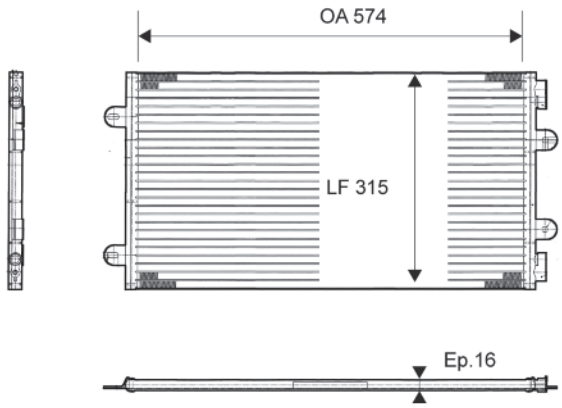


| | | | |
|---|---|---|---|
| FIAT | 46829340 | 574x315x16 | |

## 817406 ALM

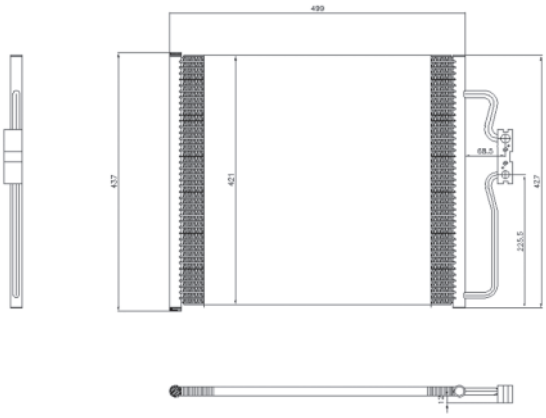

| | | | |
|---|---|---|---|
| BMW | 64538378439 | 499x421 | |

## 817386 CA1262

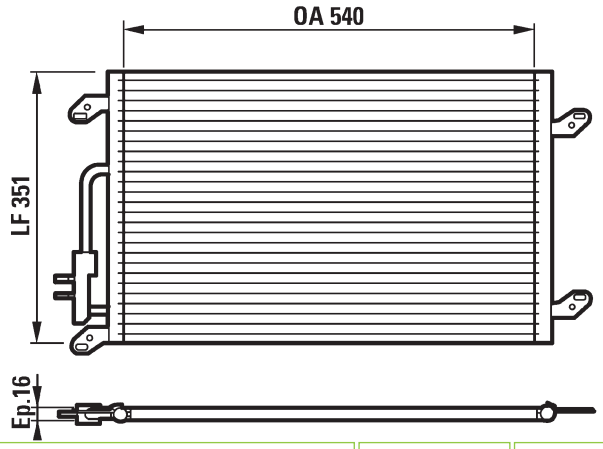


| | | | |
|---|---|---|---|
| LANCIA | 46459581 | 540x351x16 | |

## 817427 ALM

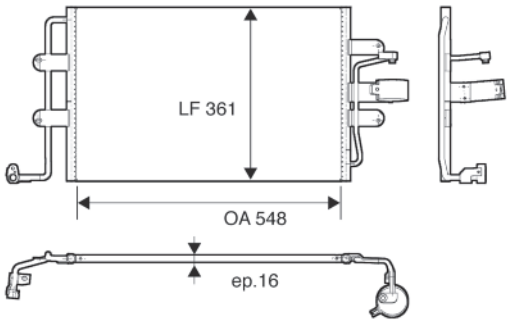


| | | | |
|---|---|---|---|
| VOLKSWAGEN | 1C0820413A | 548x361x25 | |

## 817405 ALM

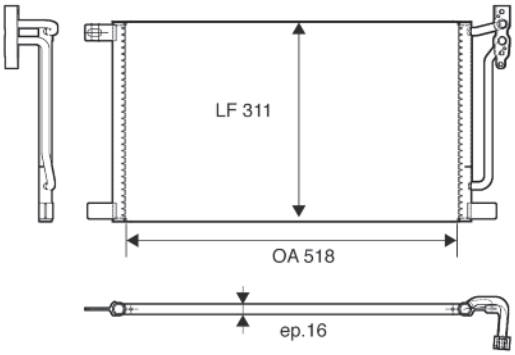


| | | | |
|---|---|---|---|
| BMW | 64538377648 | 518x311x16 | |

## 817428 CA1246

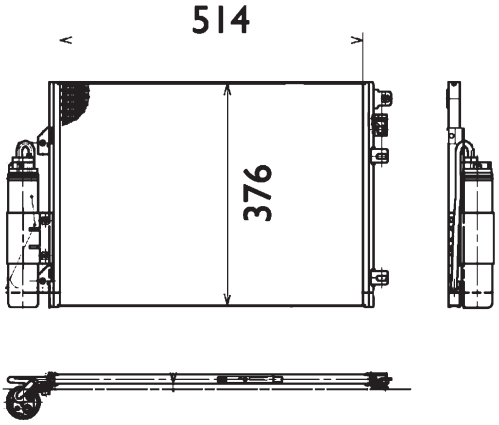


| | | | |
|---|---|---|---|
| RENAULT | 8200106950 | 514x376x16 | |

## 817437 IA1008 ALB

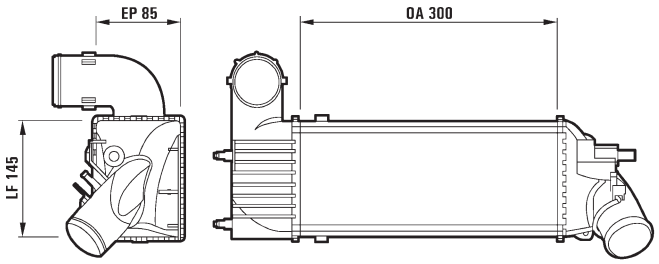


| | | |
|---|---|---|
| CITROEN 0384F3<br>PEUGEOT 0384F3 | 300x133,4x85 | 57mm L |
| | -temp.sensor | 57mm L |

## 817446 ALM

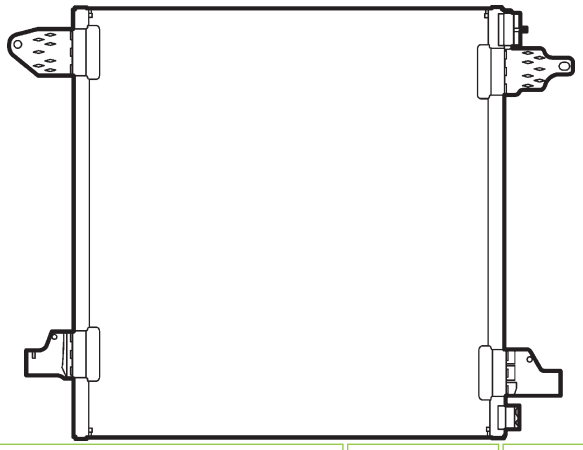

| | | |
|---|---|---|
| MERCEDES 1638300370 | 535x521x16 | |

## 817438 IA1045 ALB

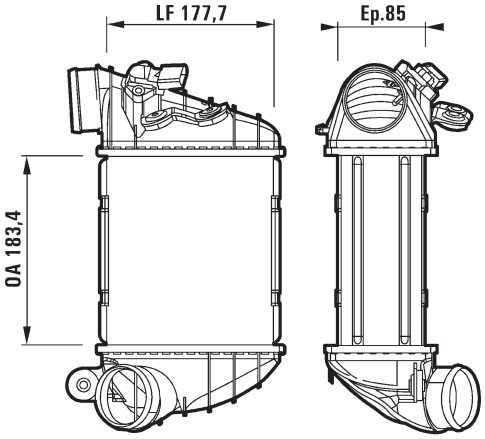


| | | |
|---|---|---|
| AUDI 8N0145805C | 183, 4x177,7x85 | |
| | +temp.sensor | |

## 817457 IA1098 ALB

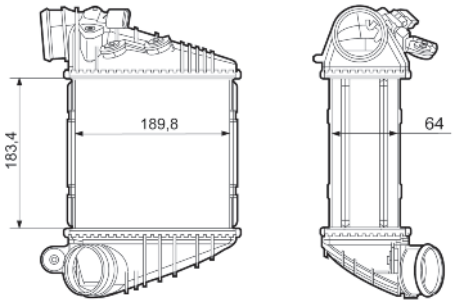


| | | |
|---|---|---|
| AUDI 1J0145803T<br>SEAT 1J0145803T<br>SKODA 1J0145803T<br>VOLKSWAGEN 1J0145803T | 183x189,7x64 | L |
| | +temp.sensor | L |

## 817445 ALM

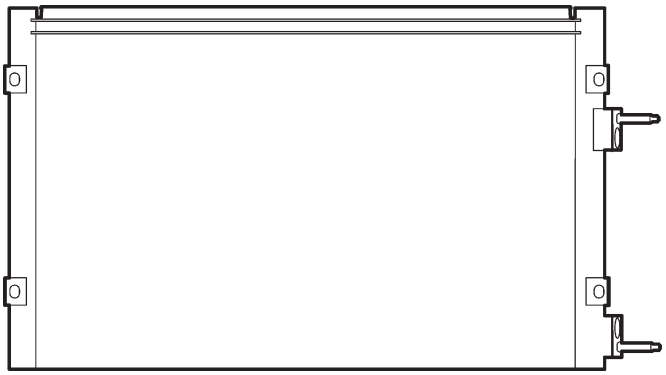

| | | |
|---|---|---|
| CHRYSLER 5017405 | 544x348x22 | |

## 817458 ALM

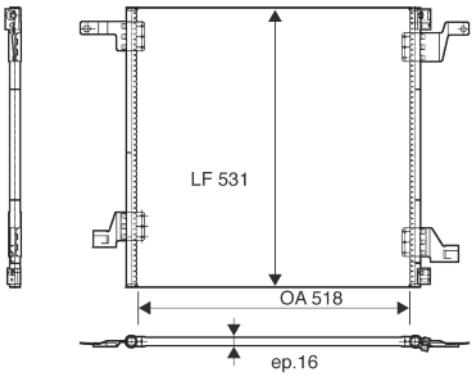


| | | |
|---|---|---|
| MERCEDES 1638300170 | 518x531x16 | |

## 817463 CA1241

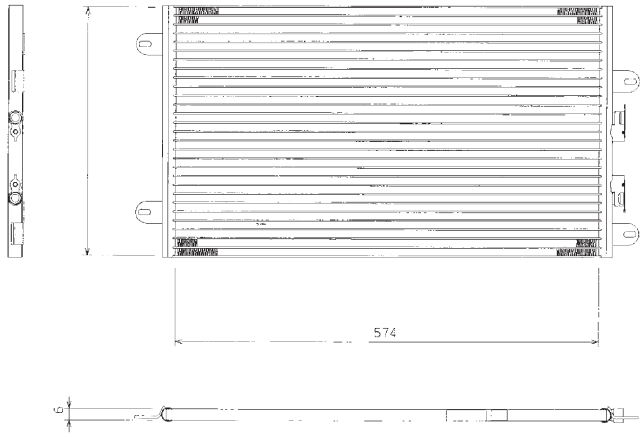


| | | |
|---|---|---|
| ALFA ROMEO 46768973 | 574x339x16 | |

## 817475 ALM

| | | |
|---|---|---|
| CHRYSLER 5017621 | 674x392x22 | |

## 817464 CA1321

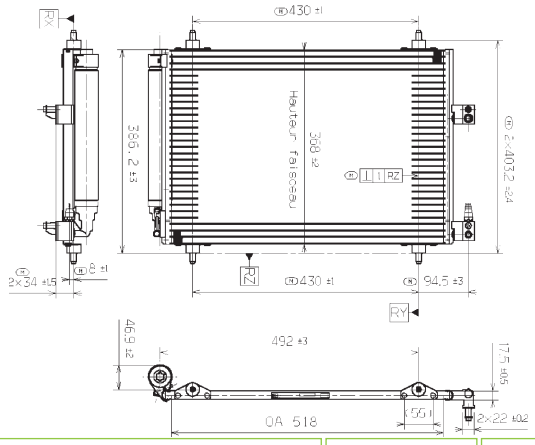


| | | |
|---|---|---|
| CITROEN 6453FH | 516x360x16 | |

## 817477 ALM

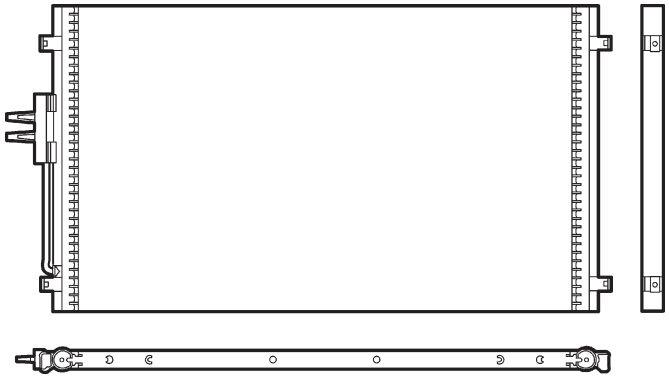

| | | |
|---|---|---|
| CHRYSLER 4809267AC | 747x438x27 | |

## 817465 CA1269

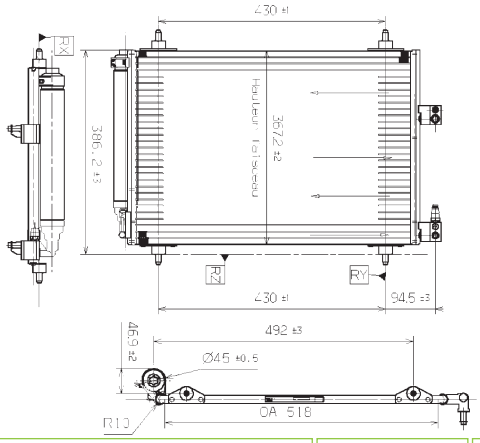


| | | |
|---|---|---|
| CITROEN 6453FP | 518x367x16 | |

## 817486 IA1174 ALB

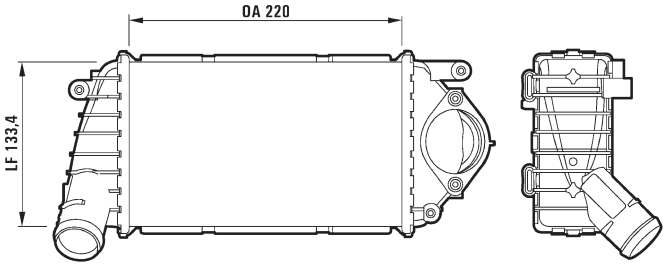


| | | |
|---|---|---|
| SEAT 6E0145805B<br>VOLKSWAGEN 6E0145805B | 220x133,4x85 | 38mm B |
| | -temp.sensor | 38mm L |

## 817487 IA1043 ALB

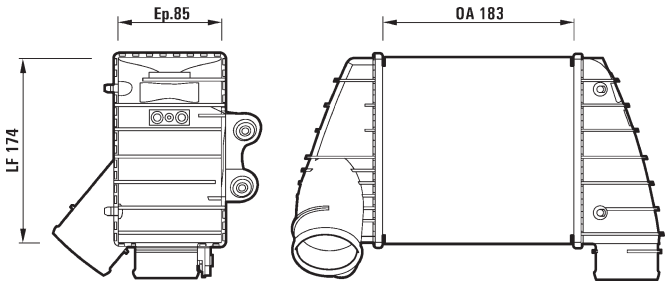


| | | |
|---|---|---|
| AUDI 8L9145806B<br>SEAT 8L9145806B | 183x174x85 | L |
| | -temp.sensor | L |

## 817492 ALM

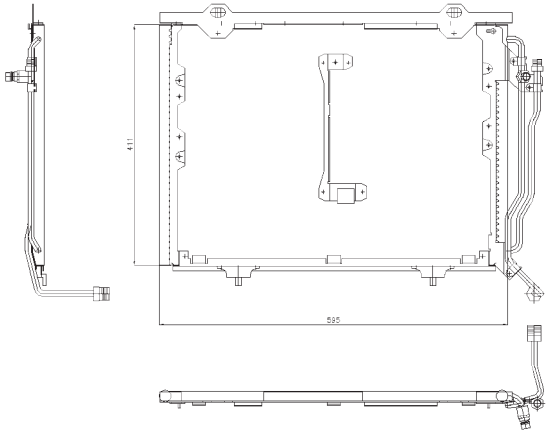

| | | |
|---|---|---|
| MERCEDES 2028300770 | 595x411 | |

## 817488 IA1044 ALB

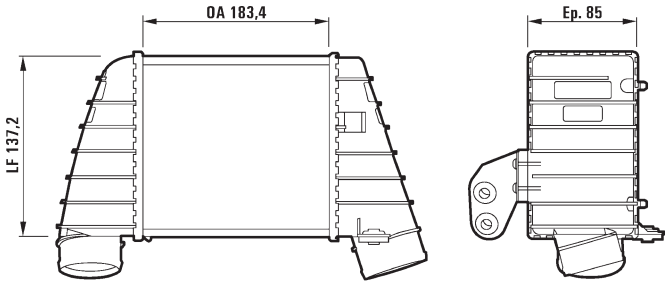


| | | |
|---|---|---|
| AUDI 8L9145805H<br>SEAT 8L9145805H | 183x137,2x85 | 60mm L |
| | -temp.sensor | 60mm L |

## 817493 ALM

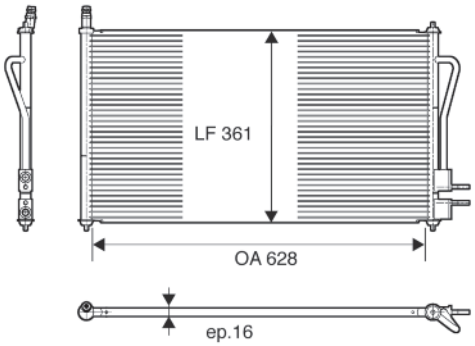


| | | |
|---|---|---|
| FORD 1086534 | 628x361x16 | |

## 817490 IA1073 ALB

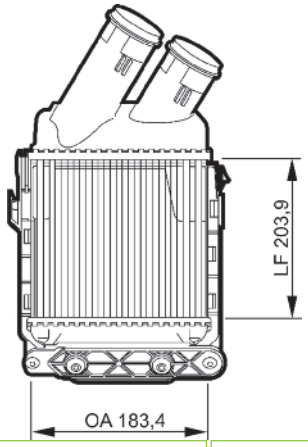


| | | |
|---|---|---|
| RENAULT 8200047162 | 204x183,4x85 | 65mm L |
| | -temp.sensor | 65mm L |

## 817504 ALM

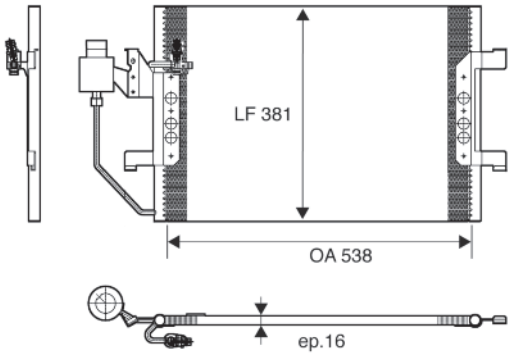


| | | |
|---|---|---|
| MERCEDES 1685000454 | 538x381x16 | |

## 817505 ALM

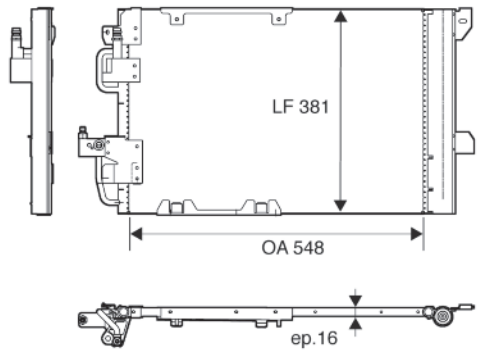


| | | |
|---|---|---|
| OPEL 1850074 | 548x381x16 | |

## 817508 CA1437 ALM

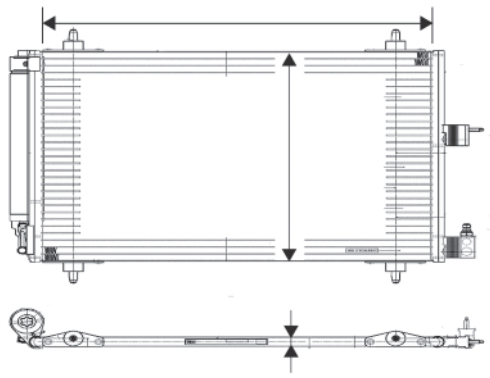

| | | |
|---|---|---|
| CITROEN 6455CV<br>PEUGEOT 6455CV | 518x364x16 | |

## 817506 ALM

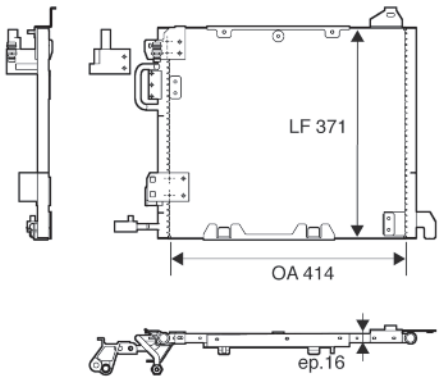


| | | |
|---|---|---|
| OPEL 1850078 | 414x371x16 | |

## 817509 ALM

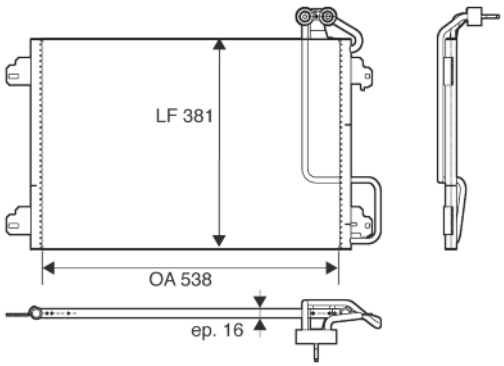


| | | |
|---|---|---|
| RENAULT 7700434383 | 538x381x16 | |

## 817507 ALM

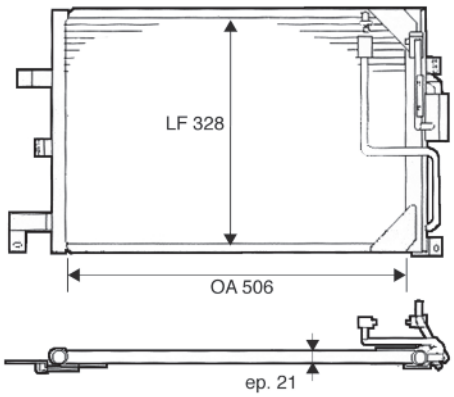


| | | |
|---|---|---|
| SAAB 4634937 | 506x328x21 | |

## 817524 CA1322

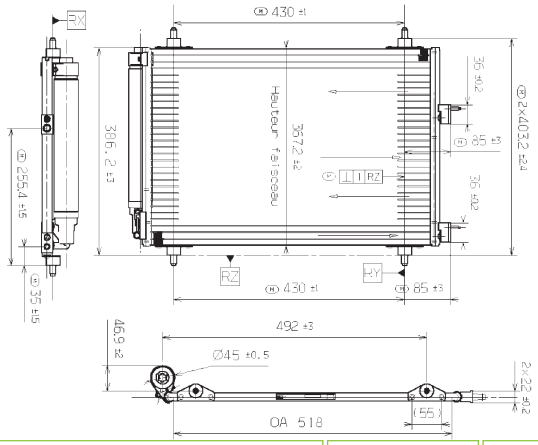


| | | |
|---|---|---|
| PEUGEOT 6455AA | 518x367x16 | |

## 817526 CA1255

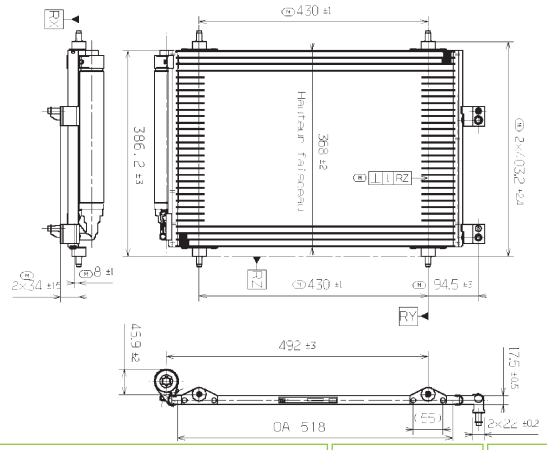


| | | |
|---|---|---|
| PEUGEOT 6455AC | 518x368x16 | |

## 817549 CA1423

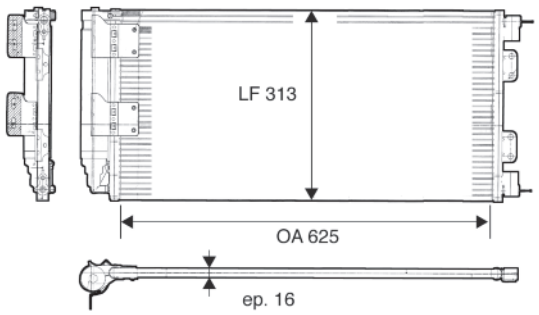


| | | |
|---|---|---|
| LAND ROVER JRB101070 | 625x313x16 | |

## 817527 ALM

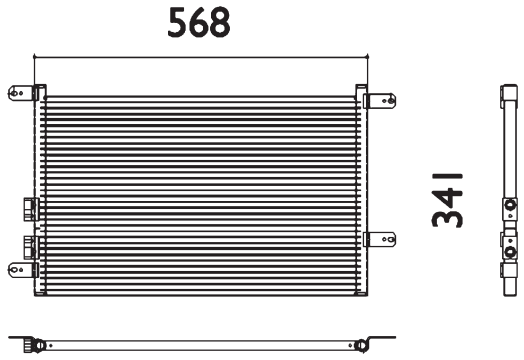


| | | |
|---|---|---|
| ALFA ROMEO 46790658 | 568x341 | |

## 817554 IA1009 ALB

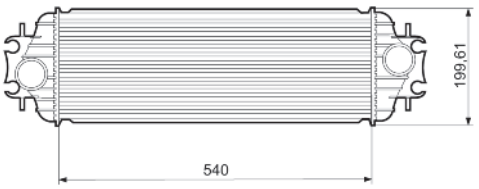


| | | |
|---|---|---|
| NISSAN 14496000AA<br>OPEL 4408078<br>RENAULT 7700312903<br>VAUXHALL 91166035 | 540x175,6x40 | 52mm L |
| | -temp.sensor | 52mm L |

## 817547 CA1254

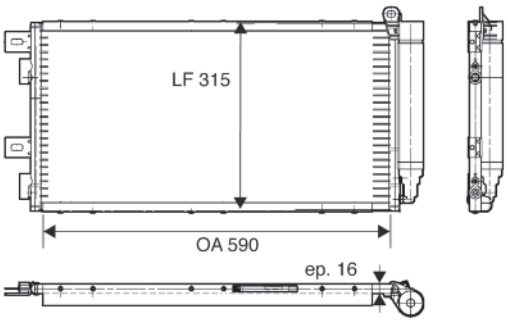


| | | |
|---|---|---|
| MINI 64531490572 | 590x315x16 | |

## 817555 IA1312 ALB

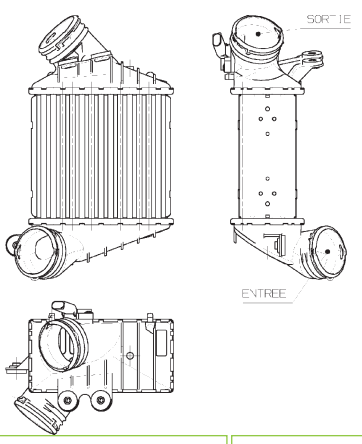


| | | |
|---|---|---|
| VOLKSWAGEN 1C0145803D | 183x189,8 | 66mm QC |
| | +temp.sensor | 66mm QC |

## 817556 IA1180 ALB

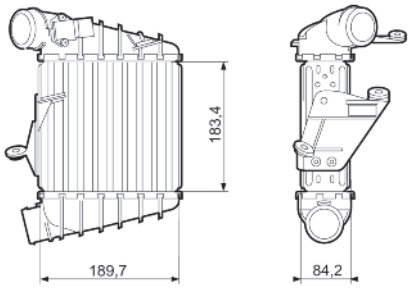


| | | | |
|---|---|---|---|
| SEAT | 6Q0145804A | 183x189x64 | 50mm L |
| SKODA | 6Q0145804A | | |
| VOLKSWAGEN | 6Q0145804A | | |
| | | -temp.sensor | 50mm L |

## 817557 IA1307 ALB

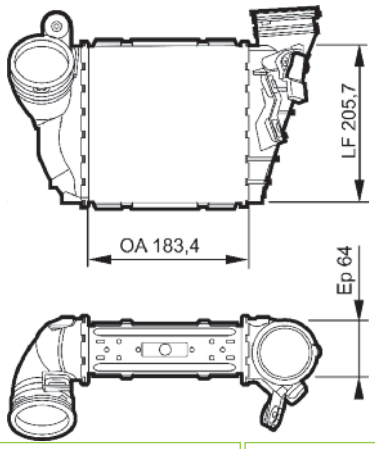


| | | | |
|---|---|---|---|
| AUDI | 1J0145803N | 189x183,4x64 | 71mm QC |
| SEAT | 1J0145803N | | |
| SKODA | 1J0145803N | | |
| VOLKSWAGEN | 1J0145803N | | |
| | | -temp.sensor | 71mm QC |

## 817558 IA1087 ALB

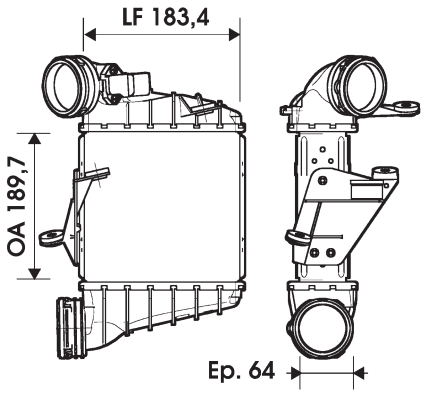


| | | | |
|---|---|---|---|
| SEAT | 6Q0145804E | 183x189,7x64 | QC |
| SKODA | 6Q0145804E | | |
| VOLKSWAGEN | 6Q0145804E | | |
| | | +temp.sensor | QC |

## 817559 ALM

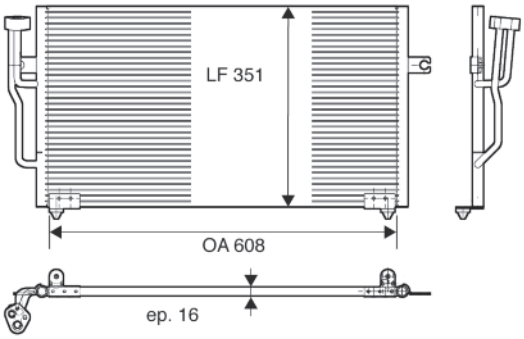


| | | | |
|---|---|---|---|
| VOLVO | 30871579 | 608x351x15 | |

## 817560 ALM

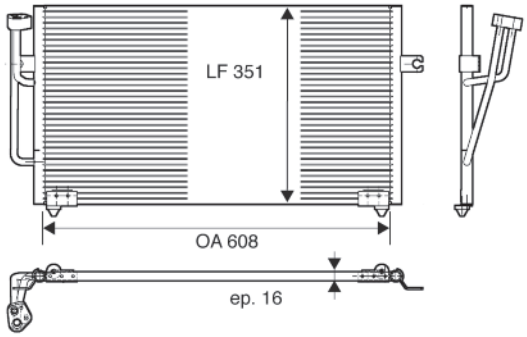


| | | | |
|---|---|---|---|
| MITSUBISHI | CAB311B080 | 608x351x16 | |

## 817561 ALM

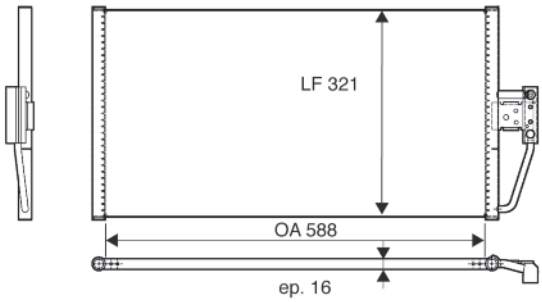


| | | | |
|---|---|---|---|
| BMW | 64538375513 | 588x321x16 | |

## 817562 ALM

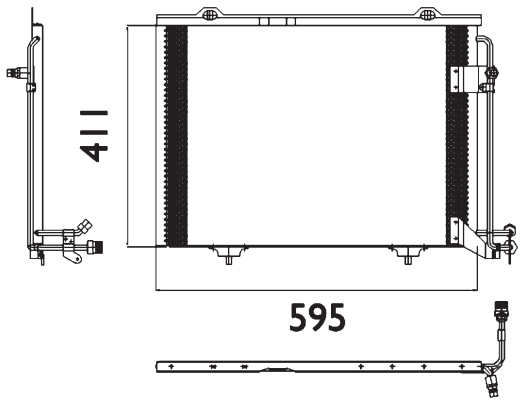


| | | |
|---|---|---|
| MERCEDES 2028300970 | 595x411 | |

## 817568 ALM

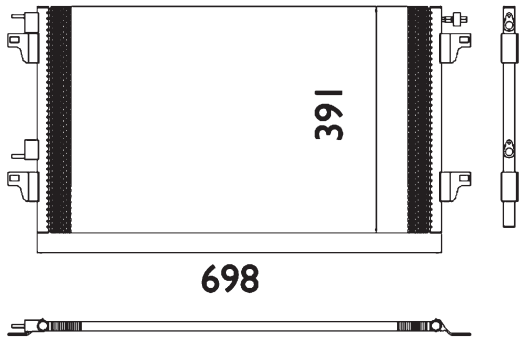


| | | |
|---|---|---|
| RENAULT 8200008763 | 698x391 | |

## 817563 ALM

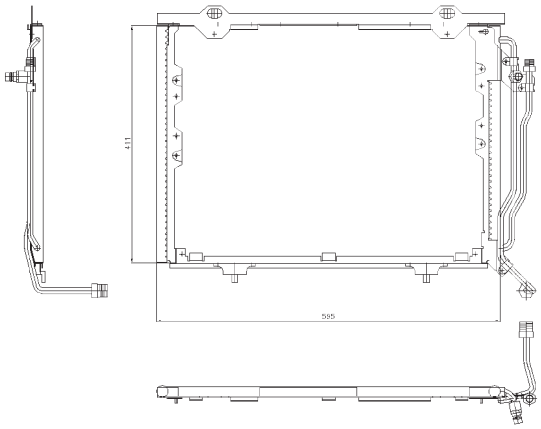

| | | |
|---|---|---|
| MERCEDES 2028301070 | 595x411 | |

## 817569 ALM

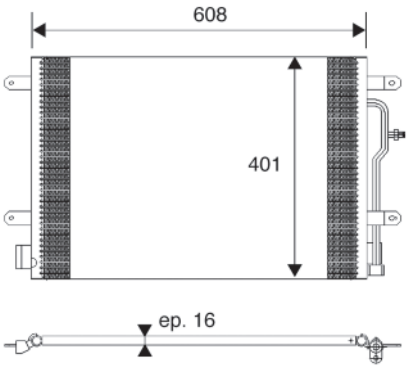


| | | |
|---|---|---|
| AUDI 8E0260403B | 608x401x16 | |

## 817567 ALM

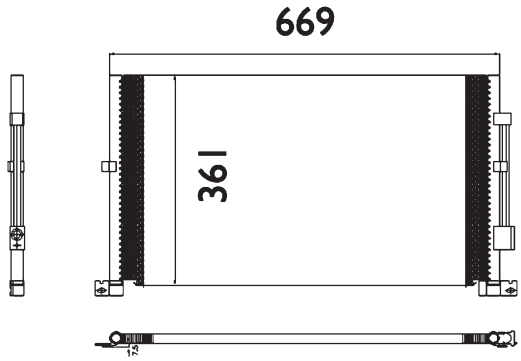


| | | |
|---|---|---|
| FORD 1232914 | 669x361 | |

## 817570 ALM

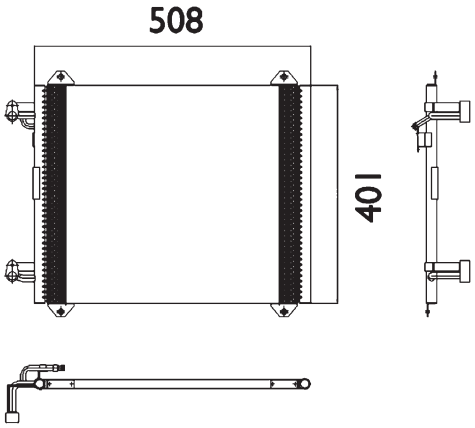


| | | |
|---|---|---|
| AUDI 8Z0260403D | 508x401 | |

## 817575 ALM

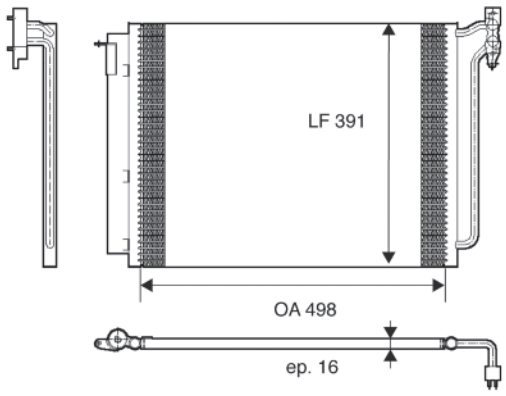


| | | | |
|---|---|---|---|
| BMW | 64536914216 | 498x391x16 | |

## 817579 CA1256

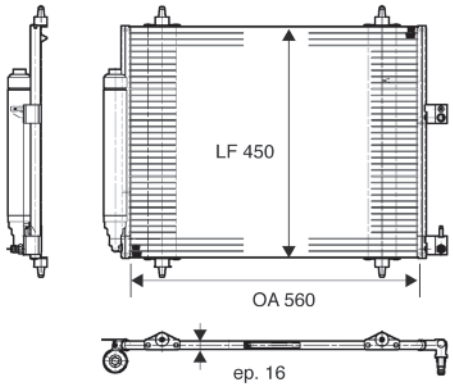


| | | | |
|---|---|---|---|
| CITROEN | 6455AP | 560x450x16 | |
| FIAT | 1489398080 | | |
| LANCIA | 1489398080 | | |
| PEUGEOT | 6455AP | | |

## 817577 CA1113

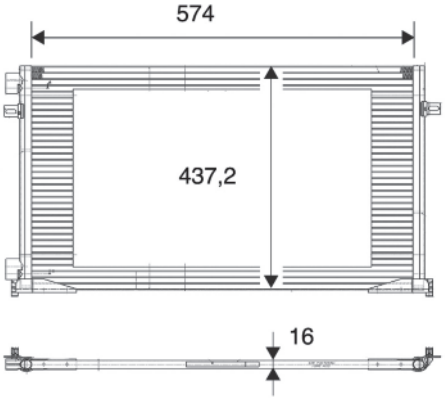


| | | | |
|---|---|---|---|
| OPEL | 4408646 | 574x437x16 | |
| RENAULT | 7700312901 | | |
| VAUXHALL | 91166018 | | |

## 817580 CA1427 ALB

Picture not available
Image non disponible
Imagen no disponible
Immagine non disponibile
Nicht verfügbares Bild
Brak zdjęcia
Картина недоступна

| | | | |
|---|---|---|---|
| LANCIA | 60678468 | 291x650x16 | |

## 817578 IM1096 ALM

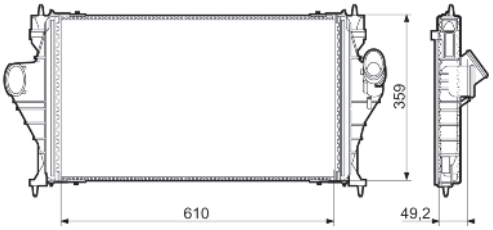


| | | | |
|---|---|---|---|
| PEUGEOT | 0384F7 | 610x359 | 67x45mm L |
| | | -temp.sensor | 67x45mm L |

## 817582 CA1245

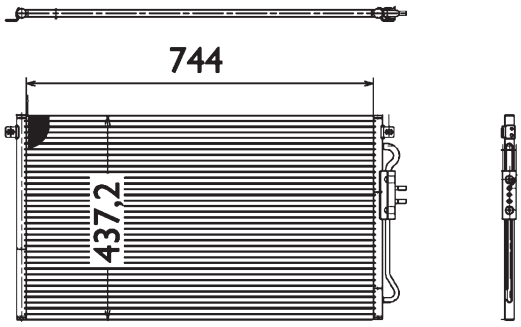


| | | | |
|---|---|---|---|
| CHRYSLER | 5072262AA | 744x437 | |

## 817601 CA1439

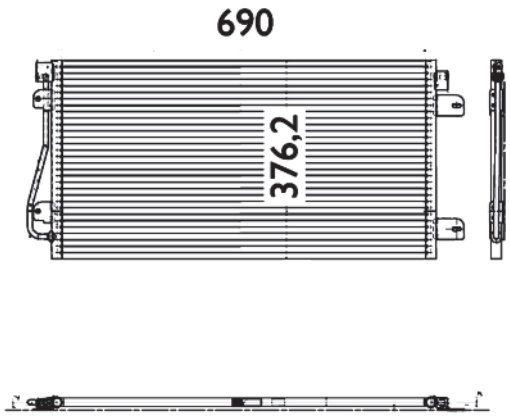


| | | |
|---|---|---|
| RENAULT 7701049665 | 690x376x16 | |

## 817607 ALM

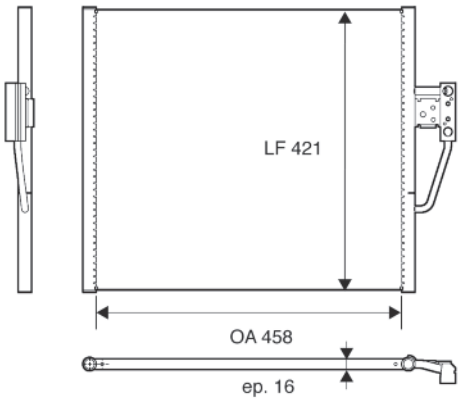


| | | |
|---|---|---|
| BMW 64538378438 | 458x421 | |

## 817602 CA1257

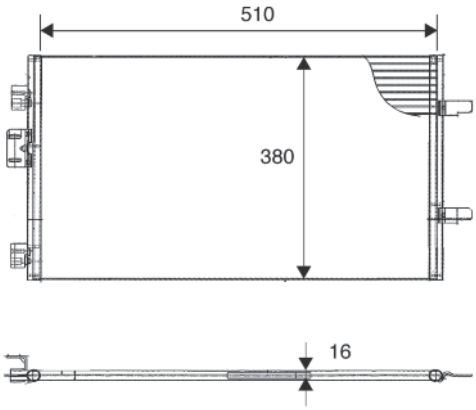


| | | |
|---|---|---|
| RENAULT 7700436062 | 510x380x16 | |

## 817608 CA1507

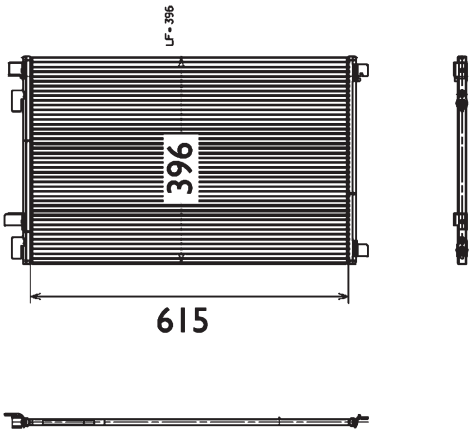


| | | |
|---|---|---|
| RENAULT 8200115543 | 615x396x16 | |

## 817603 ALM

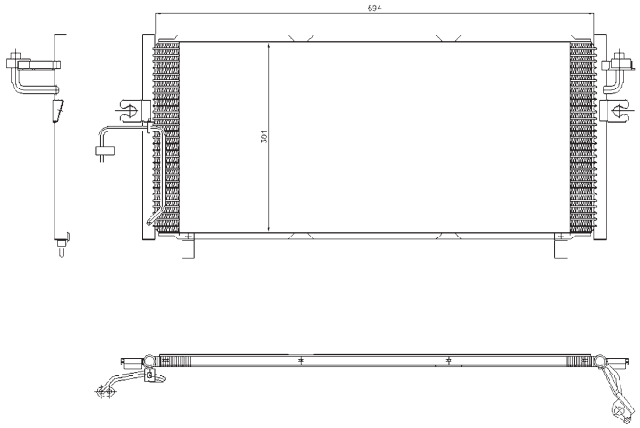

| | | |
|---|---|---|
| NISSAN 921109F515 | 694x301x16 | |

## 817609 ALM

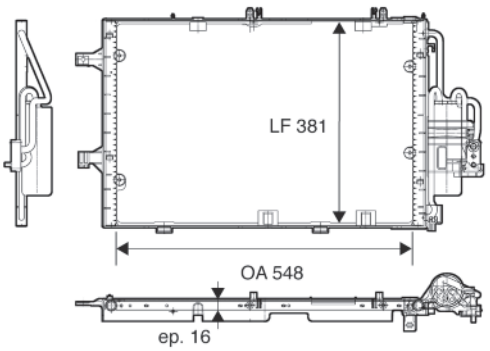


| | | |
|---|---|---|
| OPEL 1850091 | 548x381x16 | |

## 817610 ALM

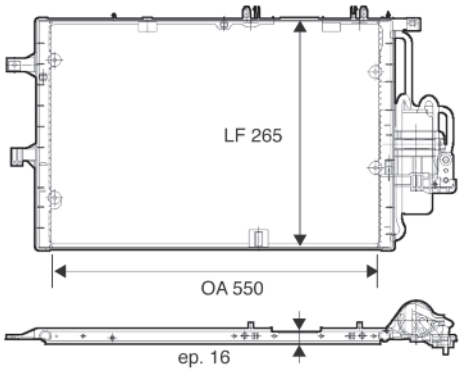


| | | |
|---|---|---|
| OPEL 1850090 | 550x265x16 | |
| | | |

## 817634 IA1321 ALB

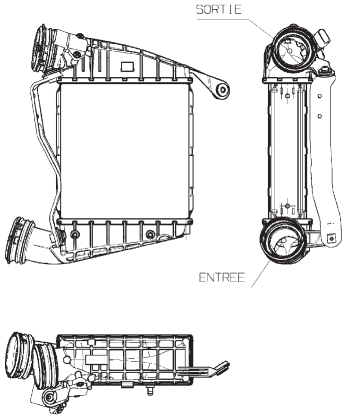


| | | |
|---|---|---|
| VOLKSWAGEN 3D0145803 | 230x217,9x64 | QC |
| | +temp.sensor | QC |

## 817625 ALB

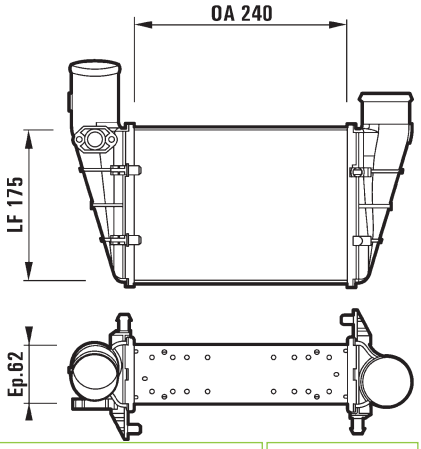


| | | |
|---|---|---|
| AUDI 058145805G<br>VOLKSWAGEN 058145805B | 240x175x62 | 53mm L |
| | -temp.sensor | 53mm L |

## 817635 IA1320 ALB

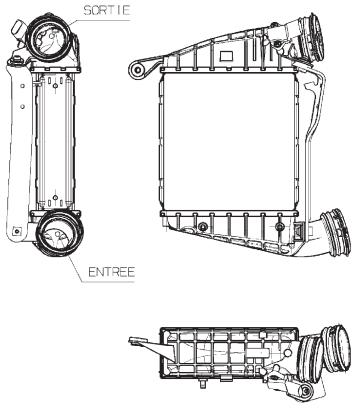


| | | |
|---|---|---|
| VOLKSWAGEN 3D0145804 | 230x217,9x64 | QC |
| | +temp.sensor | QC |

## 817632 ALB

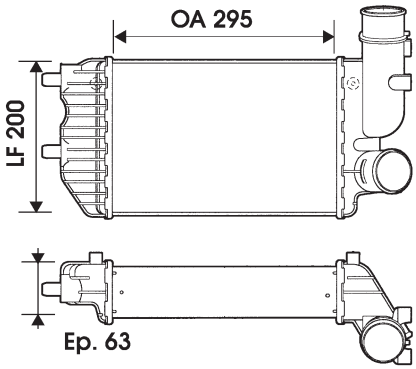


| | | |
|---|---|---|
| CITROEN 0384E4<br>FIAT 1340934080<br>PEUGEOT 0384E4 | 295x202x62 | 53mm L |
| | -temp.sensor | 53mm L |

## 817636 IA1317 ALB

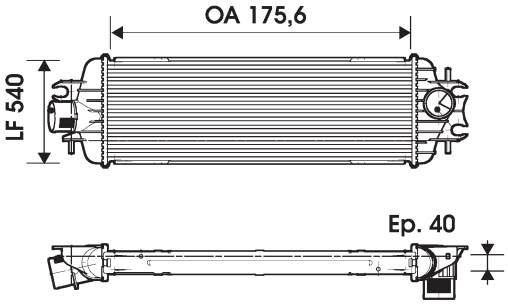


| | | |
|---|---|---|
| NISSAN 1449600QAB<br>OPEL 4411898<br>RENAULT 8200219497<br>VAUXHALL 93850451 | 540x175,6x40 | 53mm L |
| | -temp.sensor | 53mm L |

## 817637 IA1305 ALB

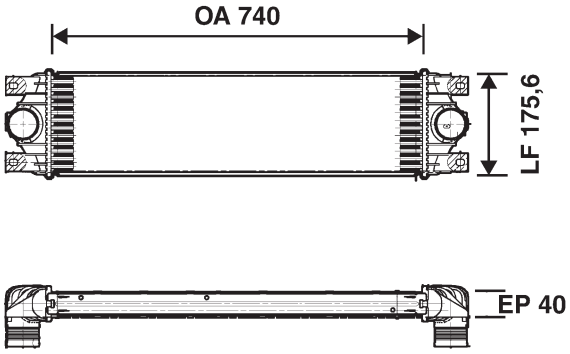


| | | |
|---|---|---|
| OPEL 4415074<br>RENAULT 7701057121<br>VAUXHALL 93179776 | 740x145,6x40 | L |
| | -temp.sensor | L |

## 817640 IA1080 ALB

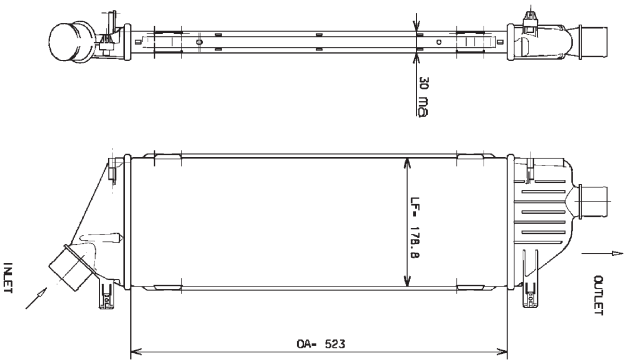


| | | |
|---|---|---|
| NISSAN 14461AY600 | 523x178,6x30 | L |
| | -temp.sensor | L |

## 817638 IA1319 ALB

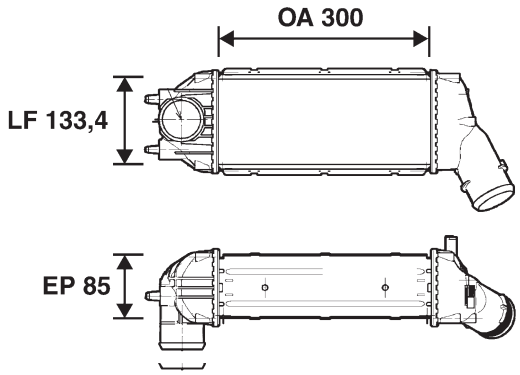


| | | |
|---|---|---|
| CITROEN 0384G4<br>PEUGEOT 0384G4 | 300x133,4x85 | L |
| | -temp.sensor | L |

## 817643 HA1181 ALB

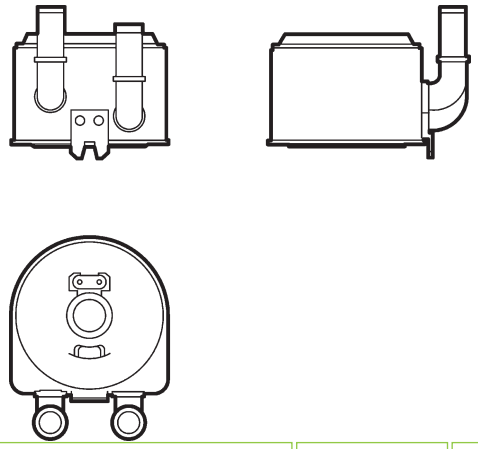

| | | |
|---|---|---|
| CITROEN 1103N5<br>PEUGEOT 1103N5 | 96, 6x96,6x63 | |
| | | |

## 817639 IA1095 ALB

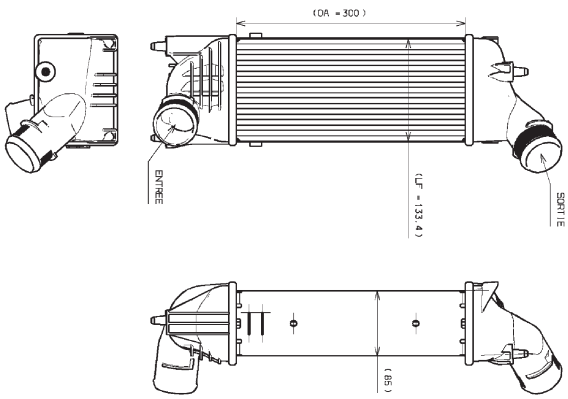


| | | |
|---|---|---|
| CITROEN 0384G6<br>PEUGEOT 0384G6 | 300x133,4x85 | L |
| | -temp.sensor | L |

## 817644 CA1117

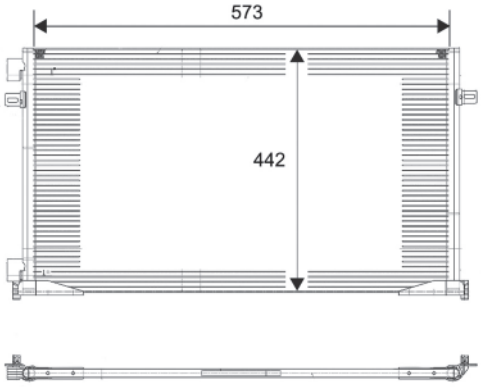


| | | |
|---|---|---|
| OPEL 4414387<br>RENAULT 8200073912<br>VAUXHALL 91168643 | 573x442x16 | |
| | | |

## 817645 CA1421

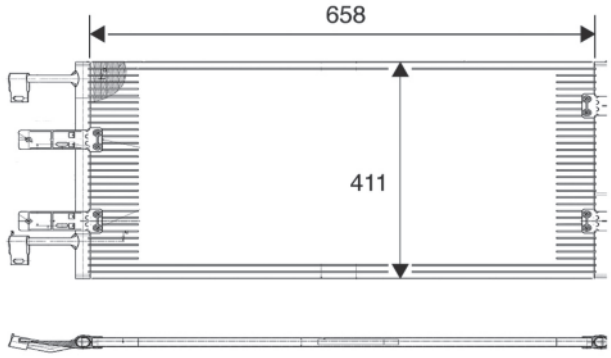


| | | | |
|---|---|---|---|
| RENAULT | 8200019382 | 658x411x16 | |

## 817648 CA1263

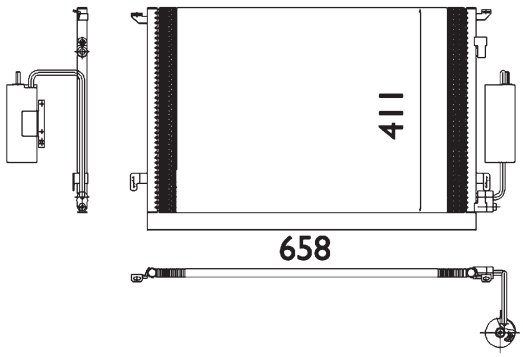


| | | | |
|---|---|---|---|
| OPEL | 1850077 | 658x411x16 | |
| VAUXHALL | 24418363 | | |

## 817646 CA1474

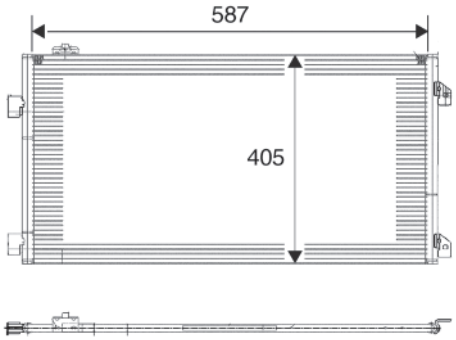


| | | | |
|---|---|---|---|
| RENAULT | 8200245598 | 587x405x16 | |

## 817649 HA177

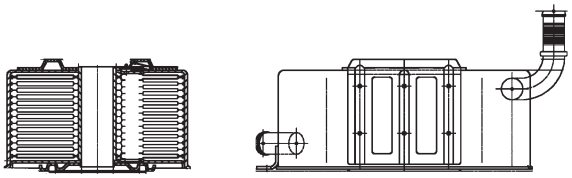

| | | | |
|---|---|---|---|
| CITROEN | 1103E8 | | |
| PEUGEOT | 1103E8 | | |

## 817647 CA1258

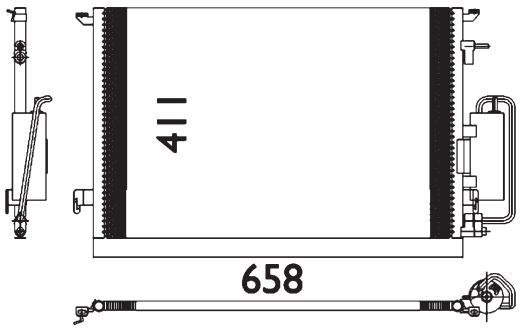


| | | | |
|---|---|---|---|
| OPEL | 1850076 | 658x411x16 | |
| VAUXHALL | 24418362 | | |

## 817650 IA1076 ALB

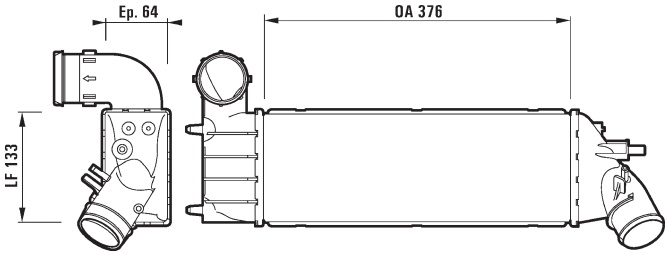


| | | | |
|---|---|---|---|
| CITROEN | 0384G0 | 376x133,6x64 | 57mm L |
| FIAT | 1489396080 | | |
| LANCIA | 1489396080 | | |
| PEUGEOT | 0384G0 | -temp.sensor | 57mm L |

## 817651 IA1078 ALB

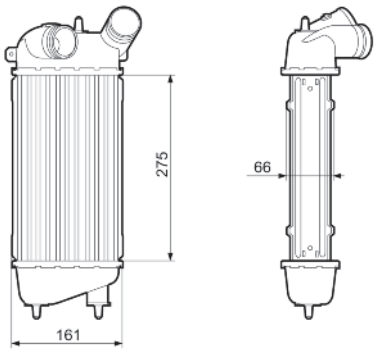


| | | |
|---|---|---|
| CITROEN 0384G2 | 275x147,4x64 | 47mm L |
| | -temp.sensor | 47mm L |

## 817655 ALM

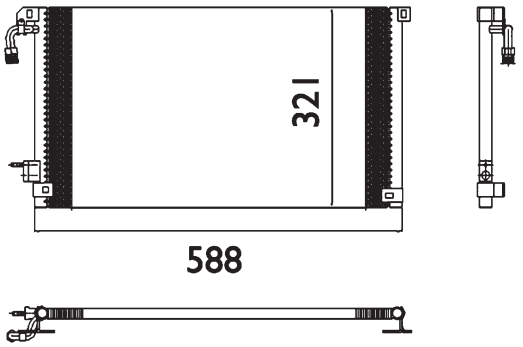


| | | |
|---|---|---|
| CITROEN 6455Z1 | 588x321 | |

## 817653 IA1309 ALB

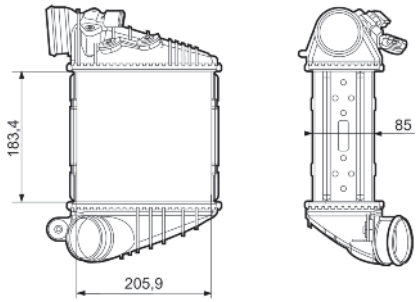


| | | |
|---|---|---|
| AUDI 1J0145803M<br>SEAT 1J0145803N<br>SKODA 1J0145803N<br>VOLKSWAGEN 1J0145803M | 183x189,8x85 | 71mm QC |
| | +temp.sensor | 71mm QC |

## 817657 ALM

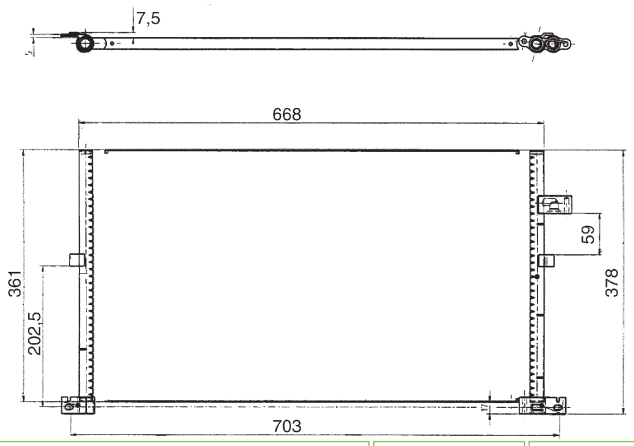


| | | |
|---|---|---|
| FORD 1152429 | 628x361 | |

## 817654 IA1085 ALB

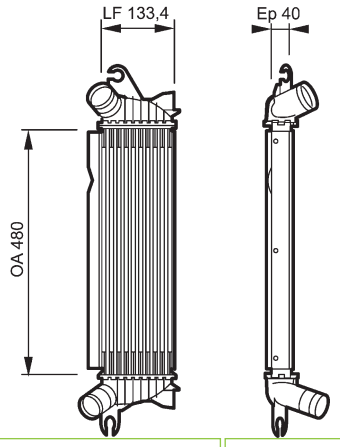


| | | |
|---|---|---|
| NISSAN 2141000QAB<br>RENAULT 8200140970 | 480x133,4x40 | 50mm L |
| | -temp.sensor | 50mm L |

## 817659 ALM

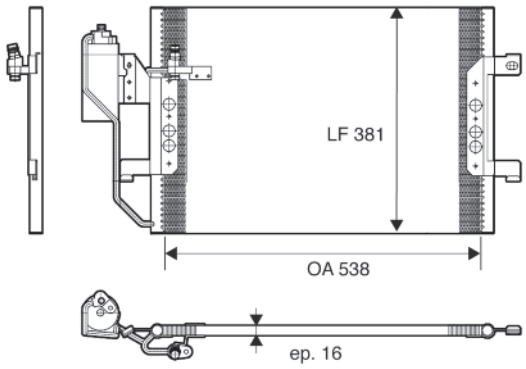


| | | |
|---|---|---|
| MERCEDES 1685000854 | 538x381x16 | |

## 817661 CA1472

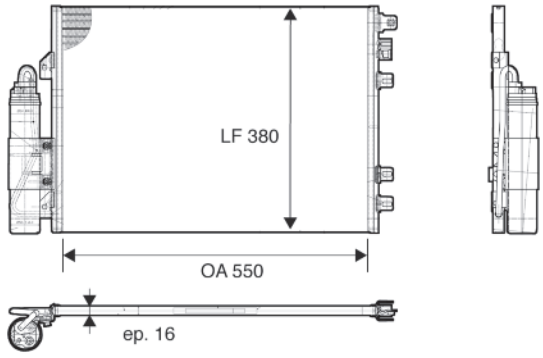


| | | |
|---|---|---|
| RENAULT 8200221132 | 550x380x16 | |

## 817665 ALM

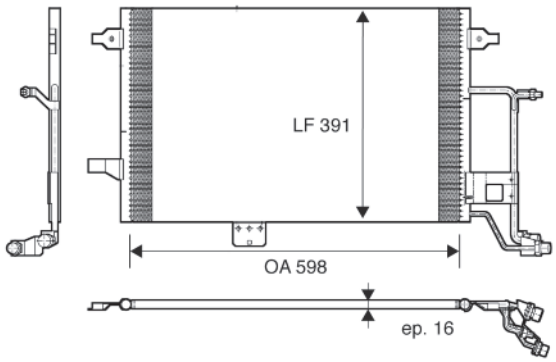


| | | |
|---|---|---|
| AUDI 4B0260403AA | 598x391x16 | |

## 817662 CA1473

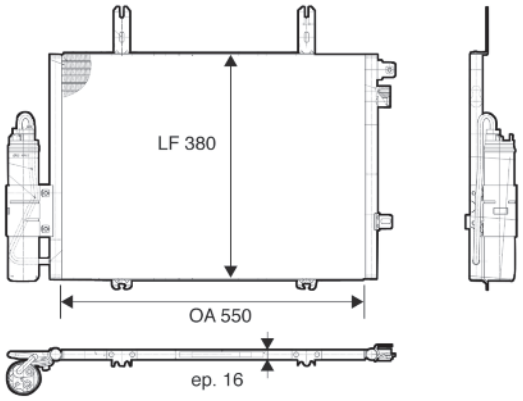


| | | |
|---|---|---|
| RENAULT 8200221131 | 550x380x16 | |

## 817666 ALM

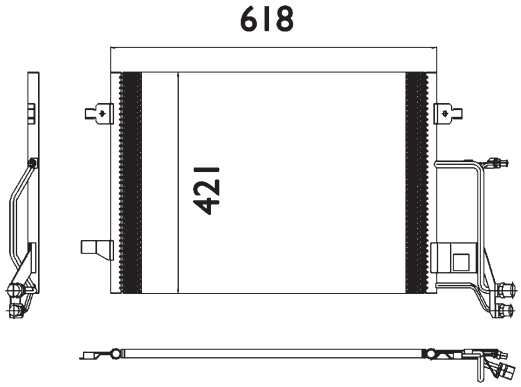


| | | |
|---|---|---|
| AUDI 4B0260403T | 618x421x16 | |

## 817664 ALM

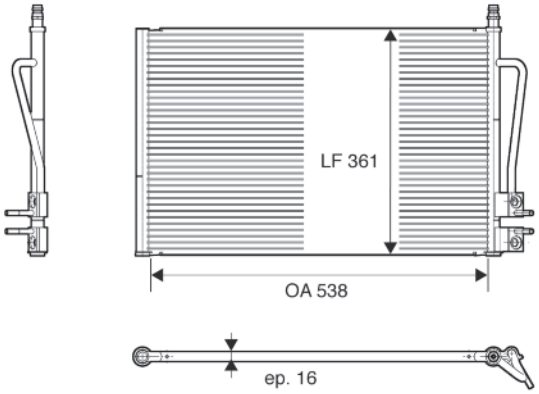


| | | |
|---|---|---|
| FORD 1254203 | 538x361x16 | |

## 817667 ALM

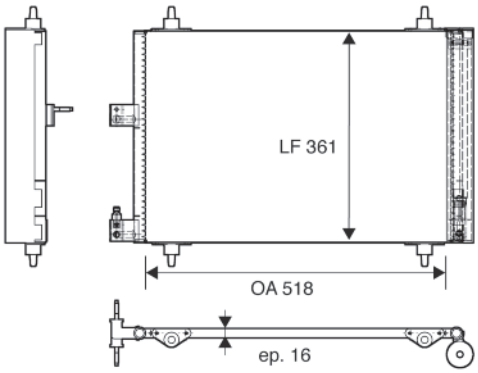


| | | |
|---|---|---|
| CITROEN 6455CQ | 518x361x16 | |

## 817668 CA1416

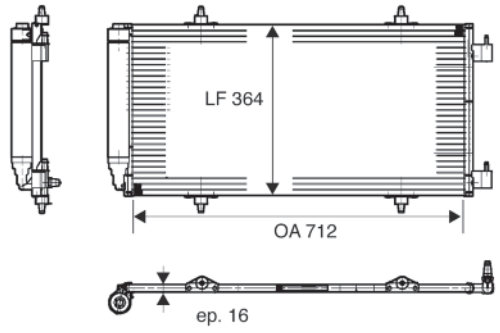


| | | | |
|---|---|---|---|
| CITROEN | 6455AQ | 712x364x16 | |
| FIAT | 1489257080 | | |
| LANCIA | 1489257080 | | |
| PEUGEOT | 6455AQ | | |

## 817674 ALM

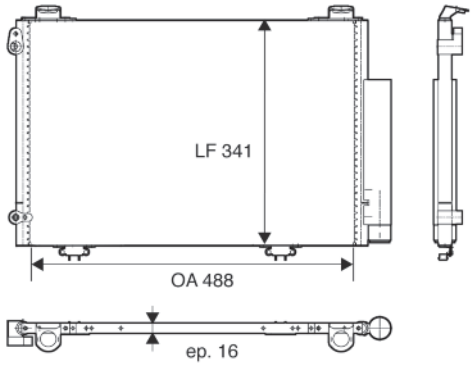


| | | | |
|---|---|---|---|
| TOYOTA | 8846052020 | 488x341x17 | |

## 817669 ALM

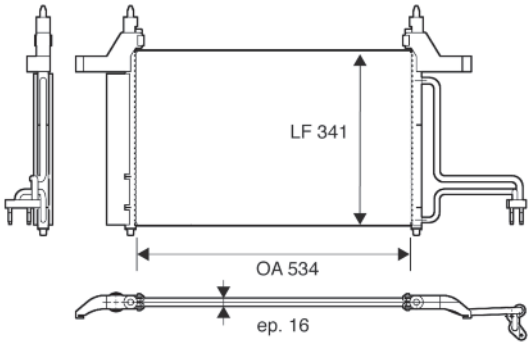


| | | | |
|---|---|---|---|
| FIAT | 46745840 | 534x341x16 | |

## 817675 ALM

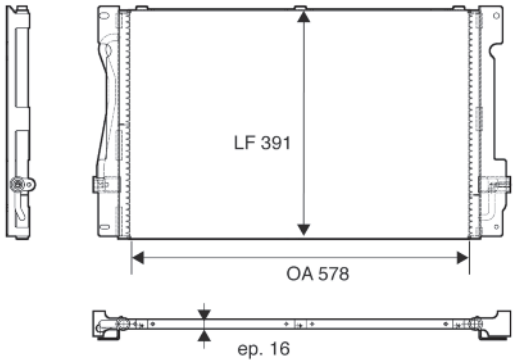


| | | | |
|---|---|---|---|
| VOLVO | 9171271 | 578x391x16 | |

## 817670 ALM

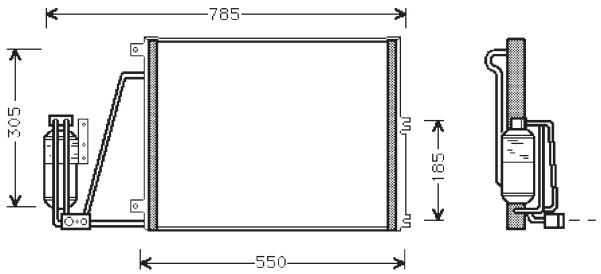


| | | | |
|---|---|---|---|
| OPEL | 1850051 | 510x370 | |

## 817679 ALM

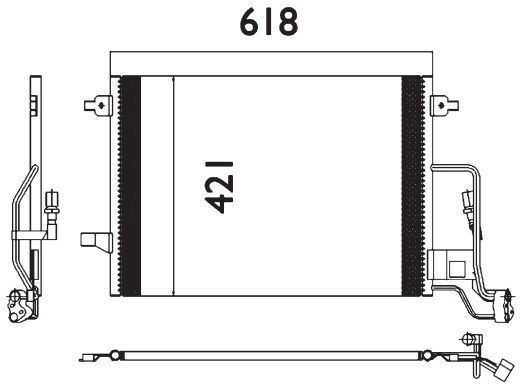


| | | | |
|---|---|---|---|
| SKODA | 3B0260401 | 618x421 | |

## 817684 ALM

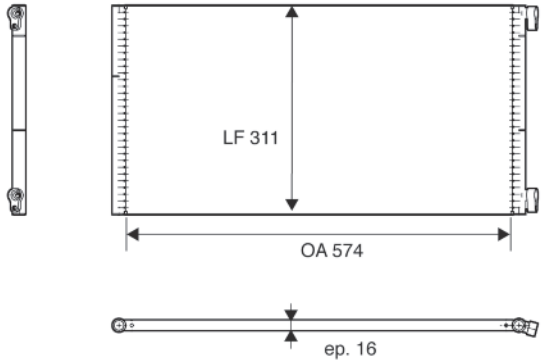


| | | |
|---|---|---|
| FIAT 46788049 | 574x311x16 | |

## 817687 CA1431

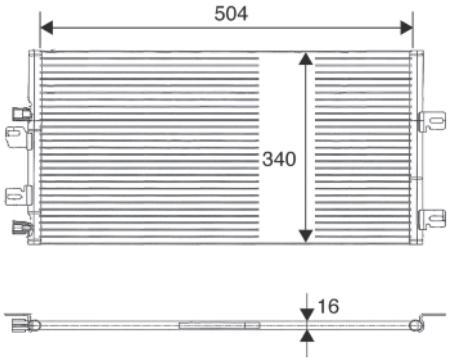


| | | |
|---|---|---|
| RENAULT 8200137650 | 504x340x16 | |

## 817685 ALM

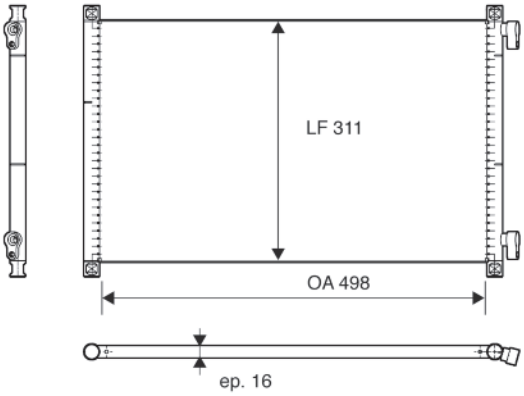


| | | |
|---|---|---|
| FIAT 46788052 | 498x311x16 | |

## 817689 CA1440

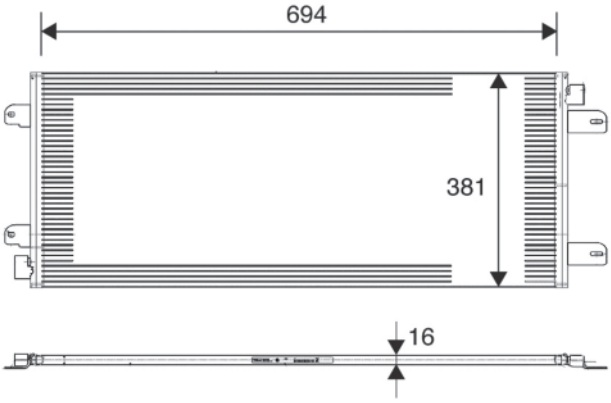


| | | |
|---|---|---|
| OPEL 4401424<br>RENAULT 7701057122<br>VAUXHALL 9109424 | 694x381x16 | |

## 817686 ALM

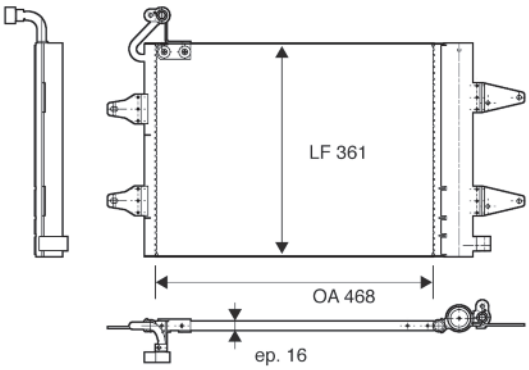


| | | |
|---|---|---|
| SEAT 6Q0820411K | 468x361x16 | |

## 817697 IM1097 ALM

Picture not available
Image non disponible
Imagen no disponible
Immagine non disponibile
Nicht verfügbares Bild
Brak zdjęcia
Картина недоступна

| | | |
|---|---|---|
| OPEL 6302041<br>VAUXHALL 6302041 | 647x414x34 | 57mm L |
| | -temp.sensor | 57mm L |

## 817698 IA1097 ALB

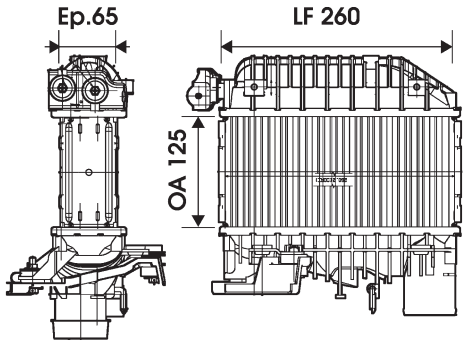


| | | |
|---|---|---|
| TOYOTA 1794027010 | 125x260x65 | 57mm L |
| | -temp.sensor | 57mm L |

## 817704 HA1182 ALB

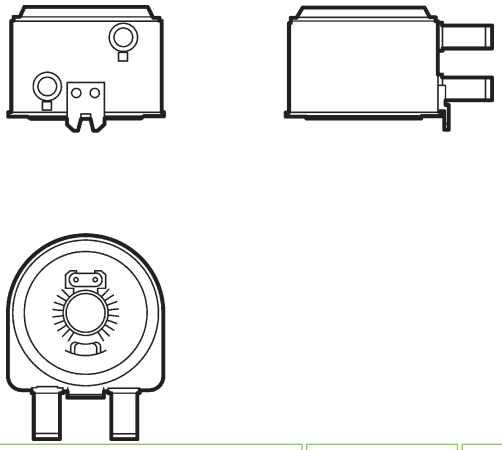

| | | |
|---|---|---|
| CITROEN 1103N1<br>PEUGEOT 1103N1 | 96, 6x96,6x63 | |

## 817701 CA1426

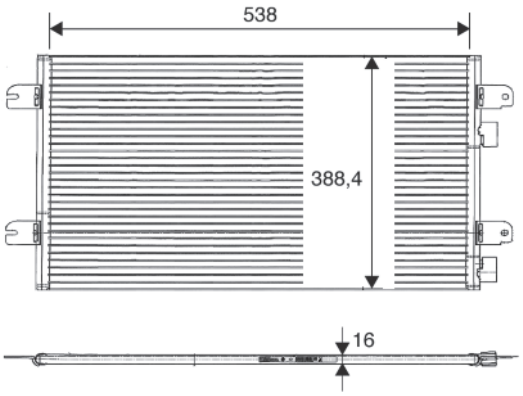


| | | |
|---|---|---|
| DACIA 8200182361<br>RENAULT 8200182361 | 538x388x16 | |

## 817705 HA1183 ALB

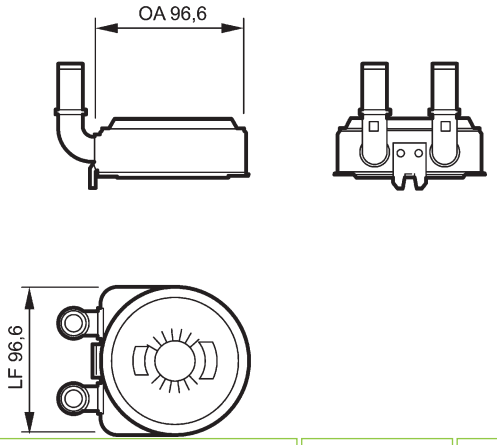


| | | |
|---|---|---|
| CITROEN 1103N0<br>PEUGEOT 1103N0 | 96, 6x96,6x32 | |

## 817703 CA1464

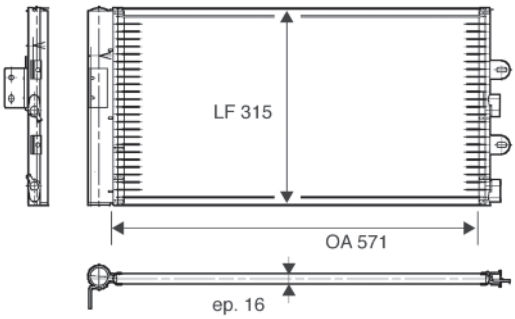


| | | |
|---|---|---|
| FIAT 51712975<br>FIAT 51763472 | 571x315x16 | |

## 817706 IA1322 ALB

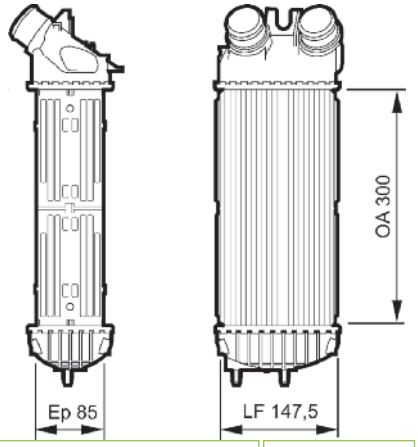


| | | |
|---|---|---|
| CITROEN 0384G5<br>PEUGEOT 0384G5 | 300x147,5x85 | |
| | -temp.sensor | |

## 817711 CA1259

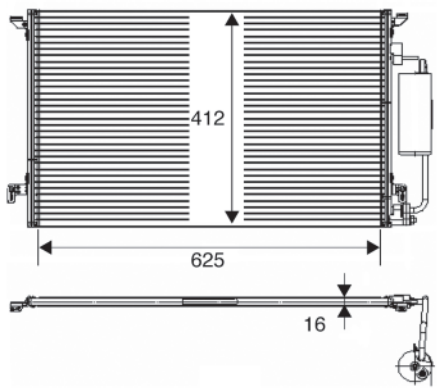


| | | | |
|---|---|---|---|
| SAAB | 12793296 | 625x412x16 | |

## 817730 IA1340 ALB

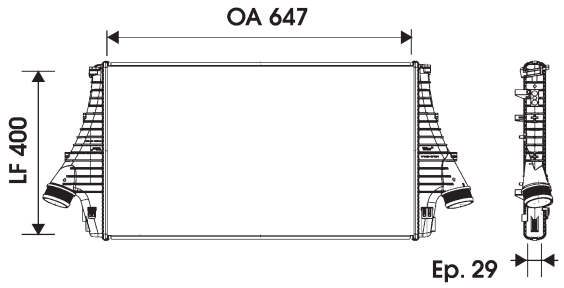


| | | | |
|---|---|---|---|
| FIAT | 51770436 | 647x400x29 | |
| OPEL | 6302059 | | |
| VAUXHALL | 13167338 | | |
| | | -temp.sensor | |

## 817712 CA1414

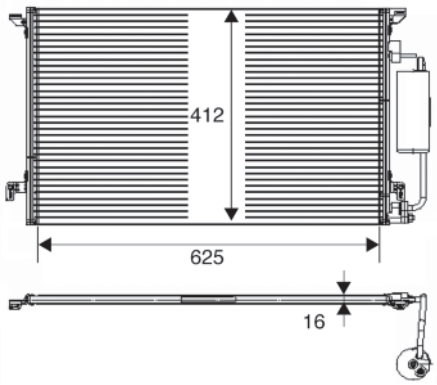


| | | | |
|---|---|---|---|
| SAAB | 12793295 | 625x412x16 | |

## 817731 ALM

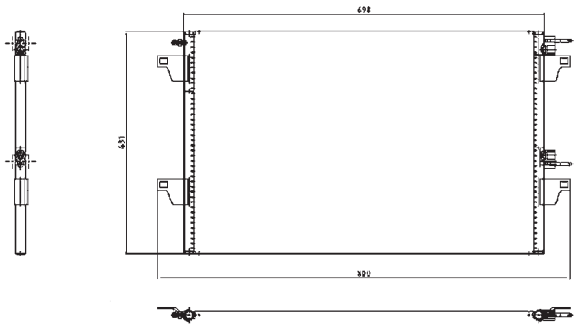

| | | | |
|---|---|---|---|
| RENAULT | 8200033733 | 660x431x16 | |

## 817729 IA1332 ALB

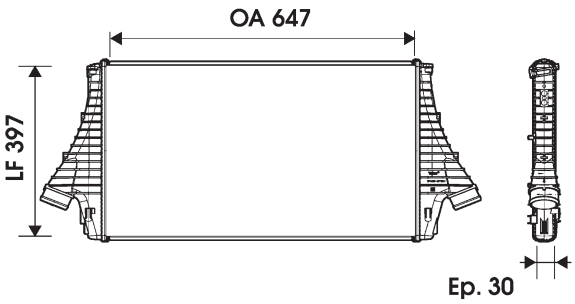


| | | | |
|---|---|---|---|
| OPEL | 6302040 | 647x400x29 | L |
| SAAB | 12788019 | | |
| VAUXHALL | 24418365 | | |
| | | -temp.sensor | L |

## 817732 ALM

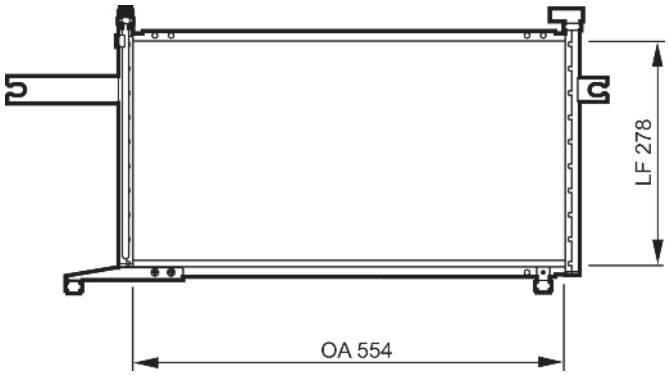


| | | | |
|---|---|---|---|
| NISSAN | 921106F600 | 554x278 | |

## 817736 IA1324 ALB

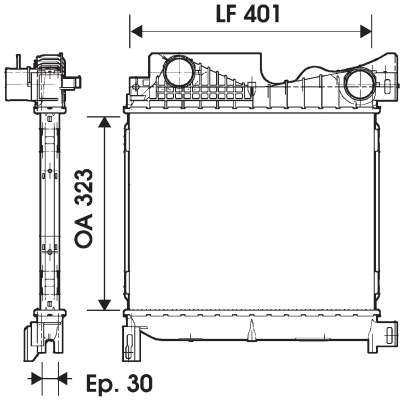


| | | |
|---|---|---|
| CHRYSLER 5142489AA | 323x401x30 | |
| | -temp.sensor | |

## 817741 ALM

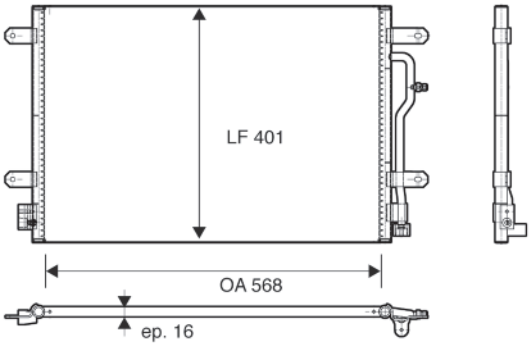


| | | |
|---|---|---|
| AUDI 8E0260403D | 568x401x16 | |

## 817739 CA1476

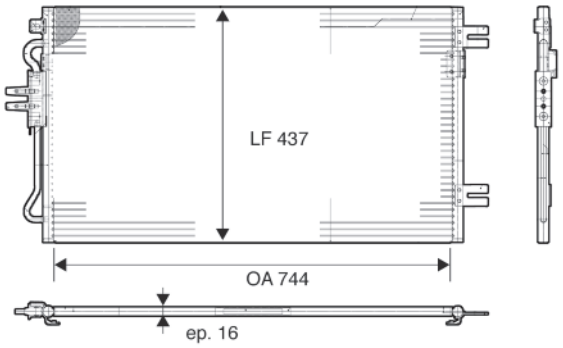


| | | |
|---|---|---|
| CHRYSLER 5142490AA | 744x437x16 | |

## 817742 CA1413

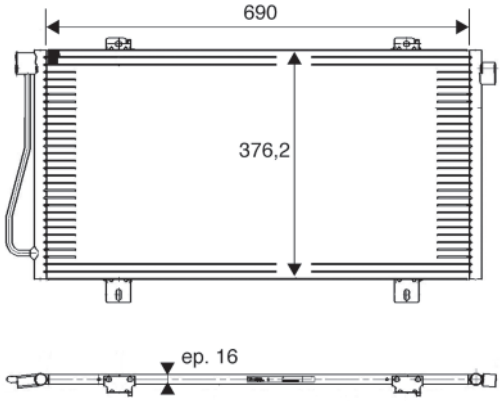


| | | |
|---|---|---|
| NISSAN 2765000QAF<br>RENAULT 7701052120 | 690x376x16 | |

## 817740 CA1436 ALM

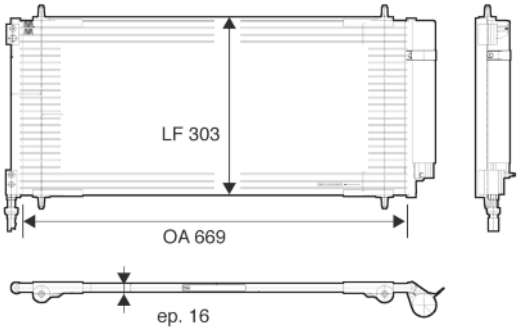


| | | |
|---|---|---|
| CITROEN 6455EY | 669x303x16 | |

## 817748 XS1110

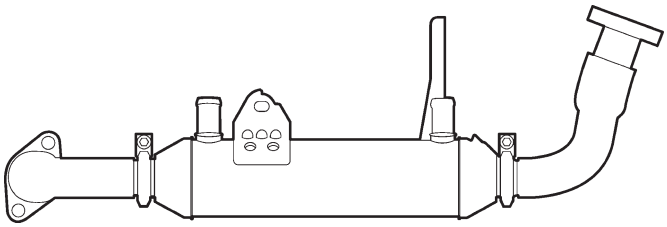

| | | |
|---|---|---|
| ALFA ROMEO 46810017<br>FIAT 55197877<br>LANCIA 46810017 | | |

## 817749 XS1163

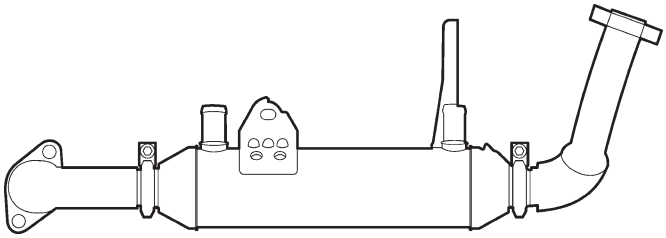

| | |
|---|---|
| FIAT | 55181418 |

## 817750 XS1125

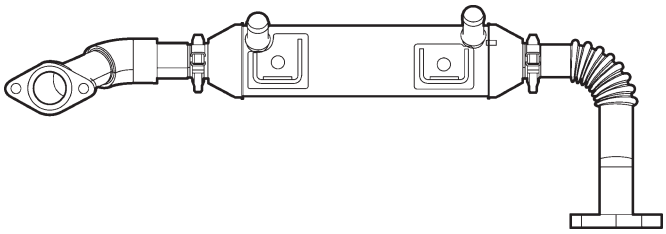

| | |
|---|---|
| ALFA ROMEO | 73500545 |
| FIAT | 73500545 |

## 817751 XS1101

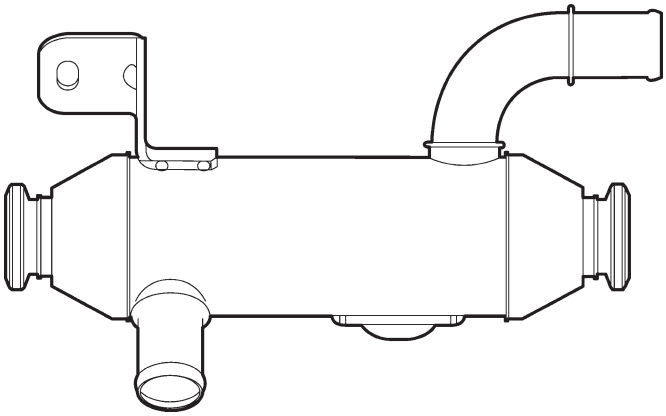

| | |
|---|---|
| CITROEN | 1628KC |
| PEUGEOT | 1628KC |

## 817752 XS1103

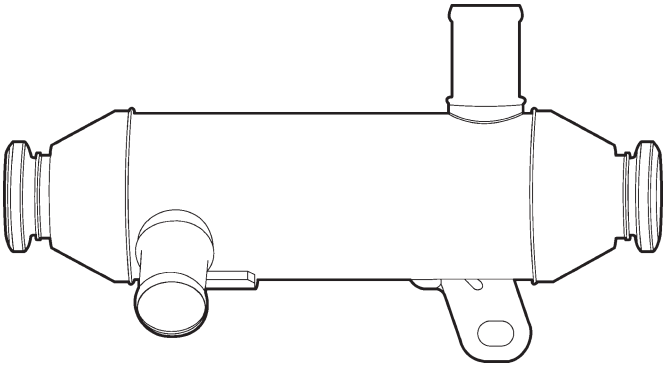

| | |
|---|---|
| CITROEN | 1628LY |
| PEUGEOT | 1628LY |

## 817753 XS1134

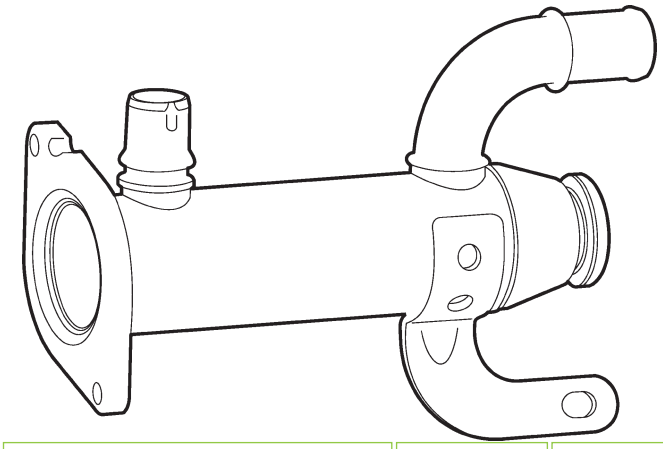

| | |
|---|---|
| CITROEN | 161835 |
| FORD | 1233381 |
| PEUGEOT | 161835 |
| VOLVO | 8653691 |

## 817754 XS1146

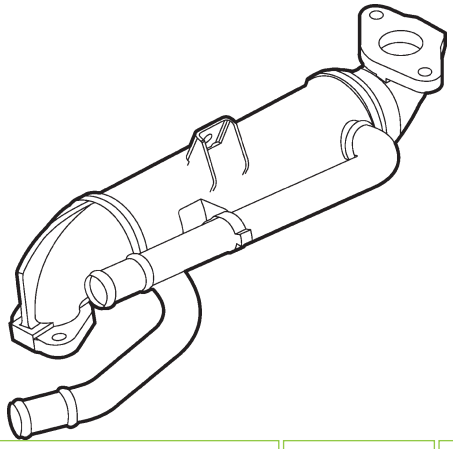

| | |
|---|---|
| AUDI | 038131513S |
| SKODA | 038131513S |
| VOLKSWAGEN | 038131513S |

## 817757 XS1112

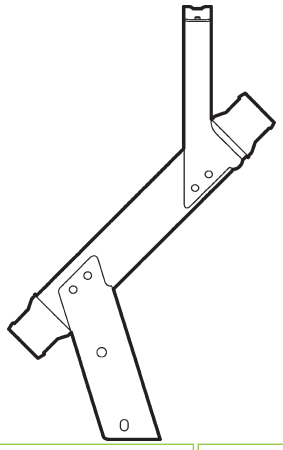

| | | |
|---|---|---|
| PEUGEOT 0384F8 | | |
| | | |

## 817761 ALB

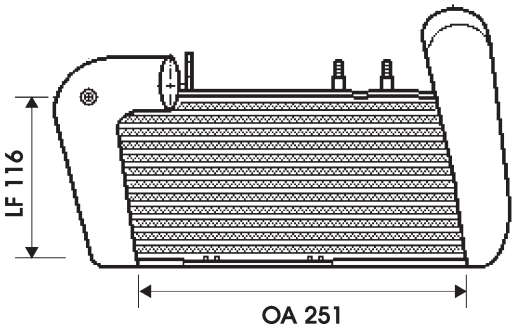


| | | |
|---|---|---|
| AUDI 028145805 | 251x116x85 | L |
| | -temp.sensor | L |

## 817759 ALB

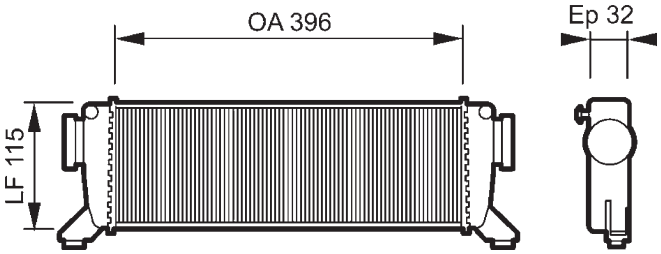


| | | |
|---|---|---|
| MERCEDES 1685000000 | 396x115x32 | 55mm L |
| | -temp.sensor | 55mm L |

## 817762 ALB

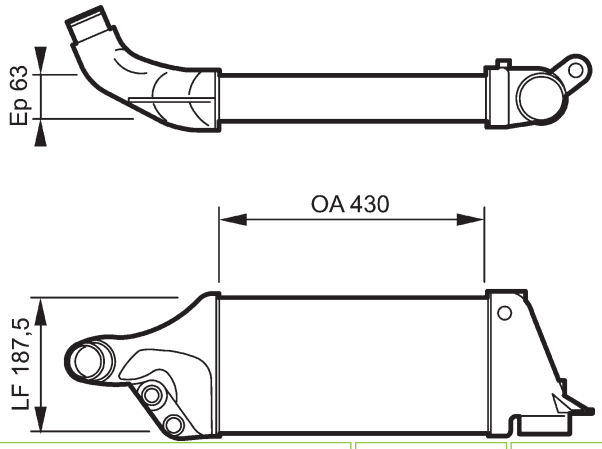


| | | |
|---|---|---|
| AUDI 8A0145805B | 430x187,5x63 | 50mm L |
| | -temp.sensor | 50mm L |

## 817760 ALM

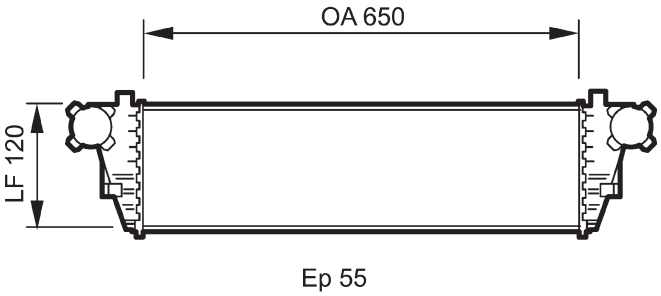


| | | |
|---|---|---|
| MERCEDES 2035000000 | 650x130x53 | 66mm QC |
| | -temp.sensor | 66mm QC |

## 817764 ALB

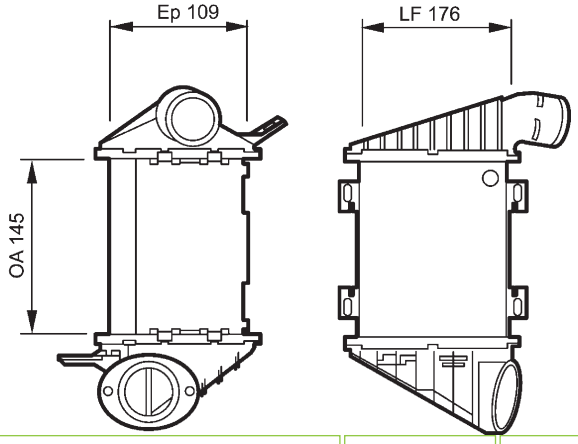


| | | |
|---|---|---|
| VOLKSWAGEN 1H0145805B | 176x145x105 | 50mm L |
| | -temp.sensor | 50mm L |

## 817765 ALB

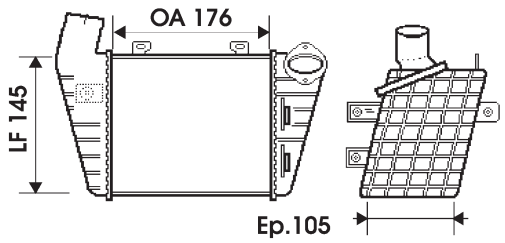


| | | |
|---|---|---|
| VOLKSWAGEN 1E0145805 | 176x145x105 | 50mm B |
| | -temp.sensor | 50mm L |

## 817777 ALM

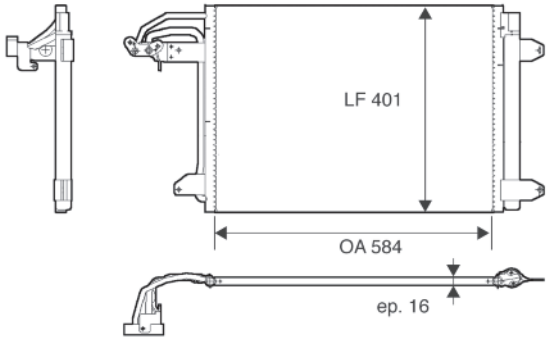


| | | |
|---|---|---|
| AUDI 1K0820411H | 584x401x16 | |

## 817766 ALB

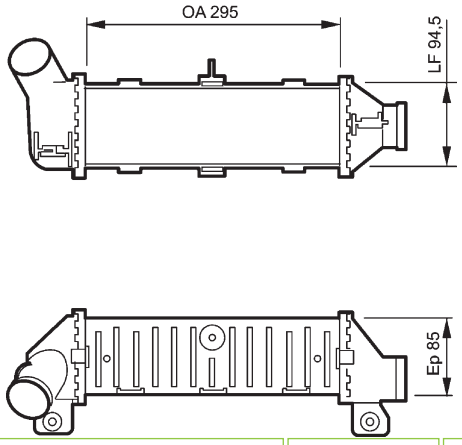


| | | |
|---|---|---|
| SEAT 6K0145805<br>VOLKSWAGEN 6K0145805 | 295x94,6x85 | 50mm L |
| | -temp.sensor | 50mm L |

## 817780 ALM

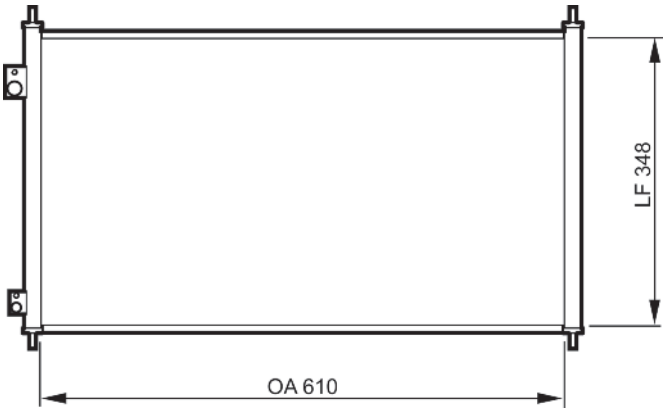


| | | |
|---|---|---|
| HONDA 80110S6DG01 | 610x348 | |

## 817767 ALB

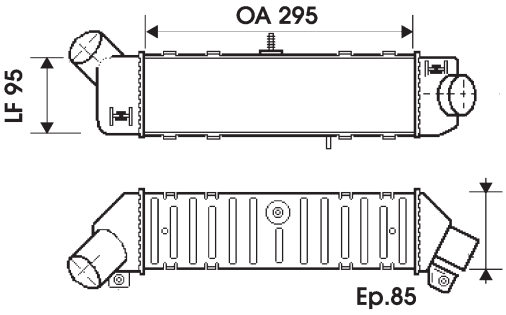


| | | |
|---|---|---|
| SEAT 6K0145805E<br>VOLKSWAGEN 6K0145805C | 295x95x85 | 60mm L |
| | -temp.sensor | 60mm L |

## 817781 ALM

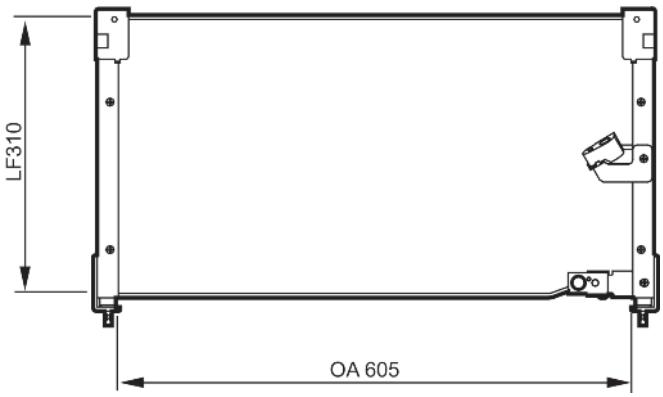


| | | |
|---|---|---|
| HONDA 80100SN7E01 | 605x310x16 | |

## 817783 ALM

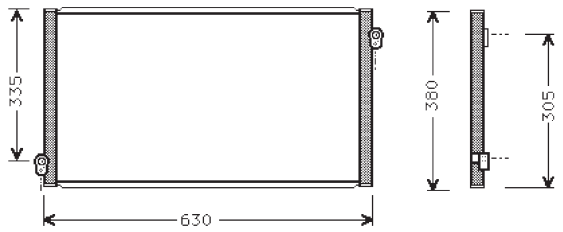


| | | | |
|---|---|---|---|
| HONDA | 80100S84A00 | 590x358 | |

## 817794 ALM

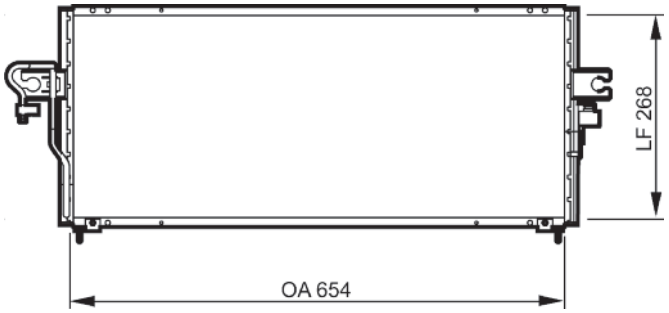


| | | | |
|---|---|---|---|
| NISSAN | 921102M117 | 654x268 | |

## 817790 ALM

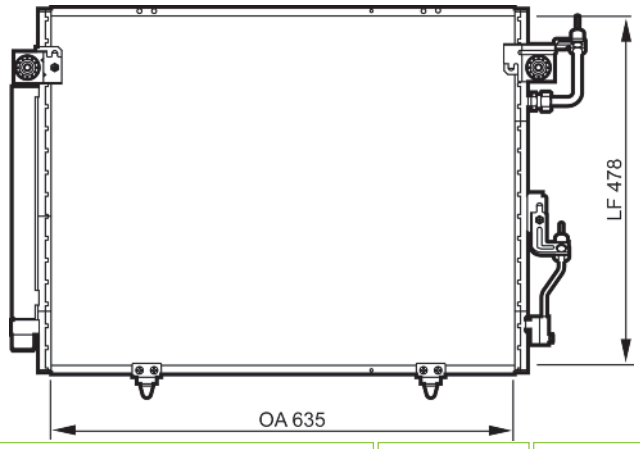


| | | | |
|---|---|---|---|
| MITSUBISHI | MR513110 | 635x478 | |

## 817799 ALM

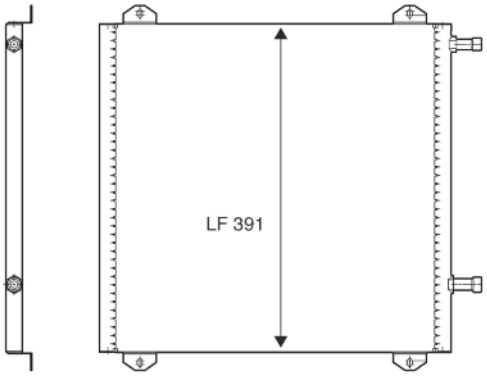


| | | | |
|---|---|---|---|
| RENAULT | 7700428315 | 418x391x16 | |

## 817792 ALM

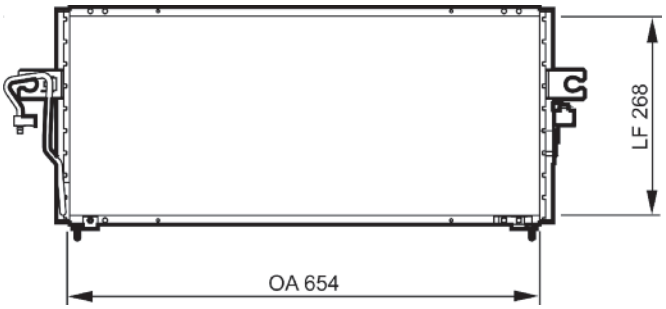


| | | | |
|---|---|---|---|
| NISSAN | 921102M112 | 654x268 | |

## 817801 ALM

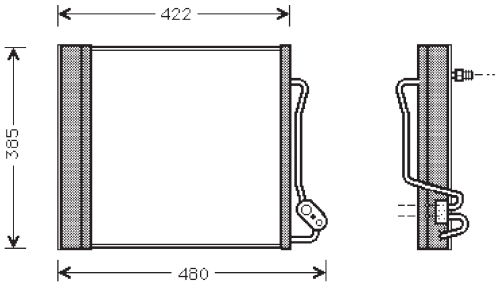


| | | | |
|---|---|---|---|
| MCC | 0001632V003 | 380x330x20 | |

## 817802 ALM

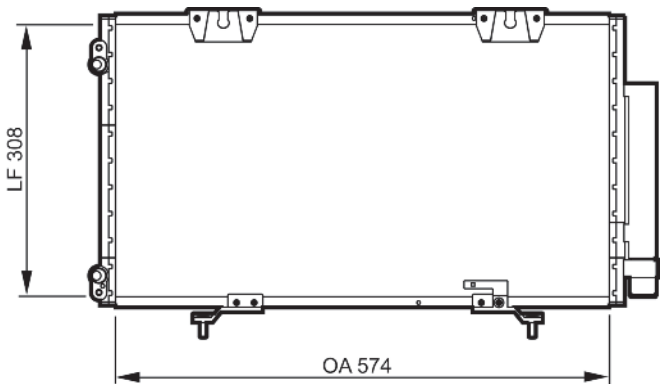


| | | | |
|---|---|---|---|
| TOYOTA | 8845005010 | 574x308x16 | |

## 817806 ALM

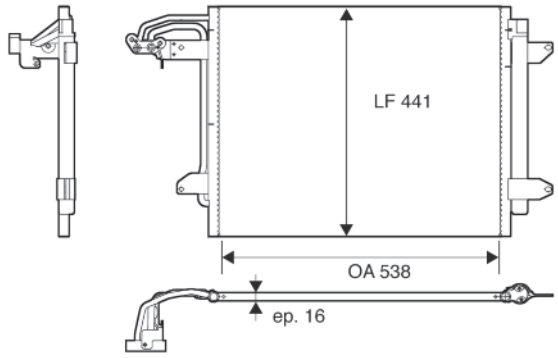


| | | | |
|---|---|---|---|
| VOLKSWAGEN | 1T0820411E | 538x441x16 | |

## 817803 ALM

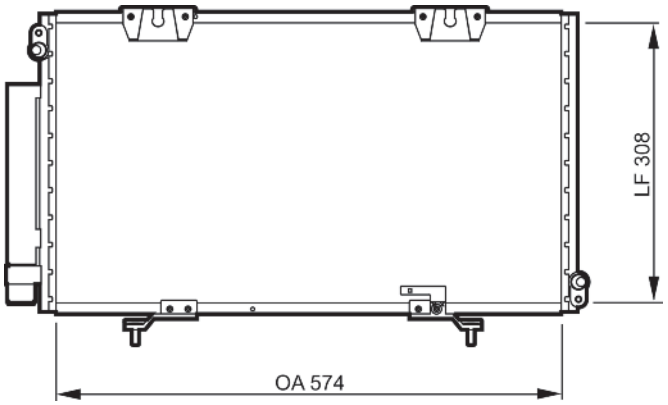


| | | | |
|---|---|---|---|
| TOYOTA | 8845005020 | 574x308x16 | |

## 817809 CA1443

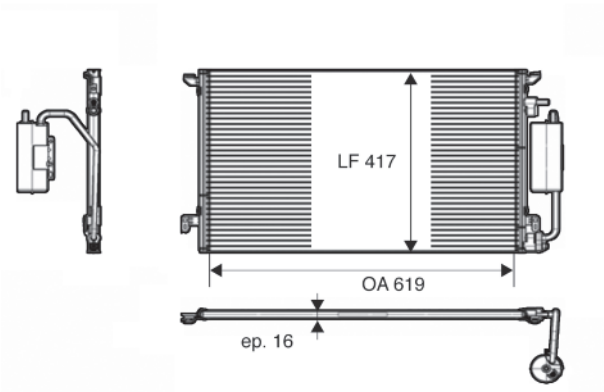


| | | | |
|---|---|---|---|
| OPEL | 1850095 | 619x417x16 | |
| SAAB | 13114943 | | |
| VAUXHALL | 13114943 | | |

## 817805 ALM

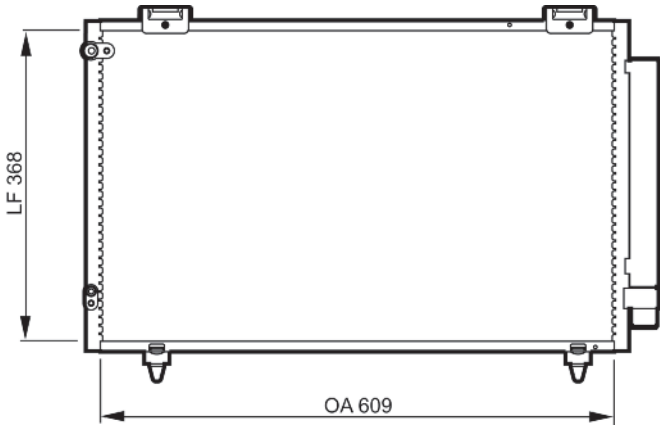


| | | | |
|---|---|---|---|
| TOYOTA | 8845013031 | 609x368 | |

## 817818 ALM

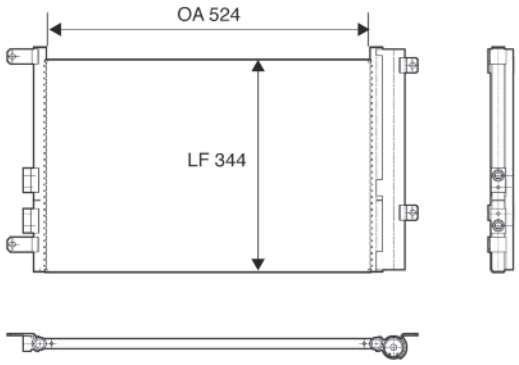


| | | | |
|---|---|---|---|
| ALFA ROMEO | 60668109 | 524x344x16 | |

## 817819 ALM

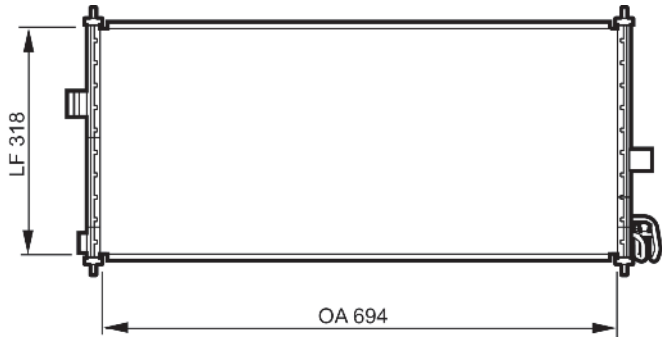


| | | | |
|---|---|---|---|
| NISSAN | 92110BM405 | 694x318x19 | |

## 817827 CA1351

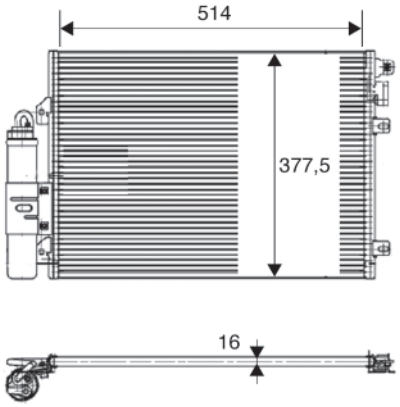


| | | | |
|---|---|---|---|
| DACIA | 8200241088 | 514x377x16 | |

## 817822 ALM

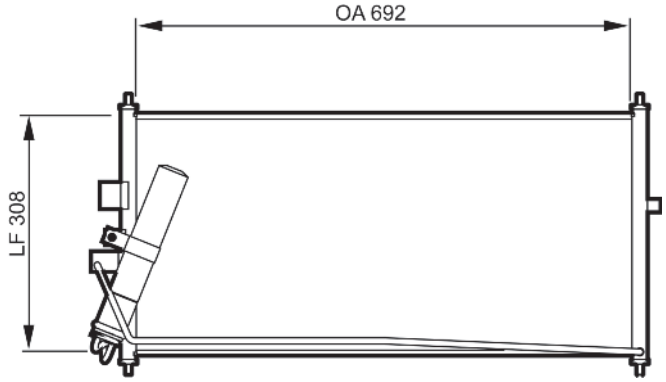


| | | | |
|---|---|---|---|
| NISSAN | 92100BN900 | 692x308 | |

## 817828 IA1402 ALB

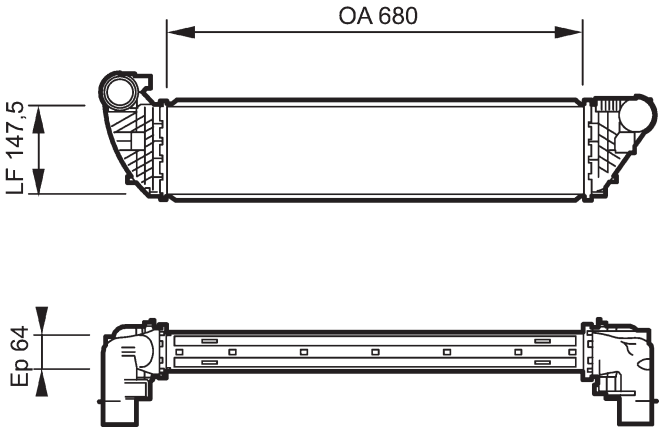


| | | | |
|---|---|---|---|
| RENAULT | 8200292773 | 680x147,5x64 | 52mm L |
| | | -temp.sensor | 52mm L |

## 817824 CA1458

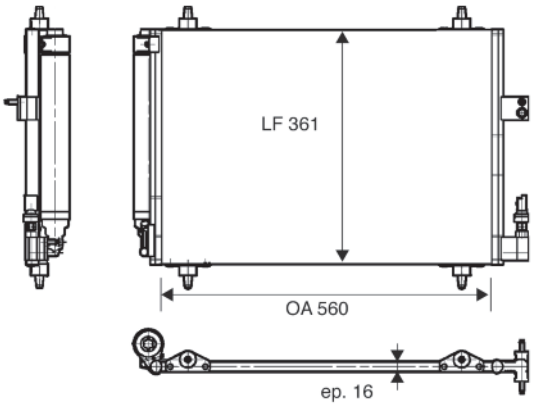


| | | | |
|---|---|---|---|
| CITROEN<br>PEUGEOT | 6455CP<br>6455CP | 560x361x16 | |

## 817837 ALM

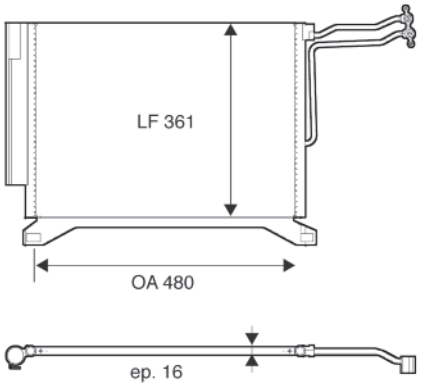


| | | | |
|---|---|---|---|
| MINI | 64536918597 | 480x361x16 | |

## 817839 ALM

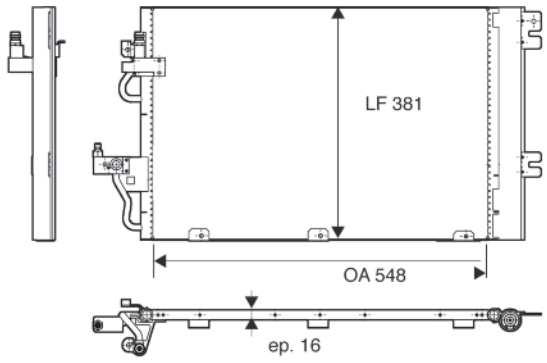


| | | |
|---|---|---|
| OPEL 1850096 | 548x381x16 | |

## 817840 ALM

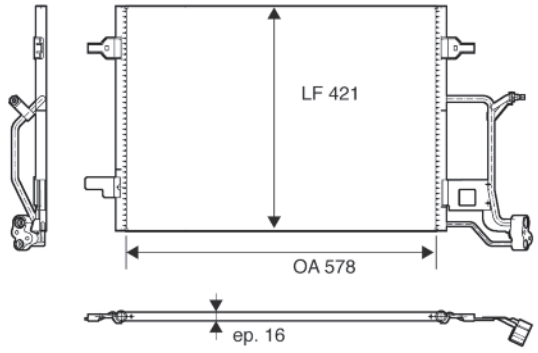


| | | |
|---|---|---|
| AUDI 8D0260403G | 578x421x16 | |

## 817841 ALM

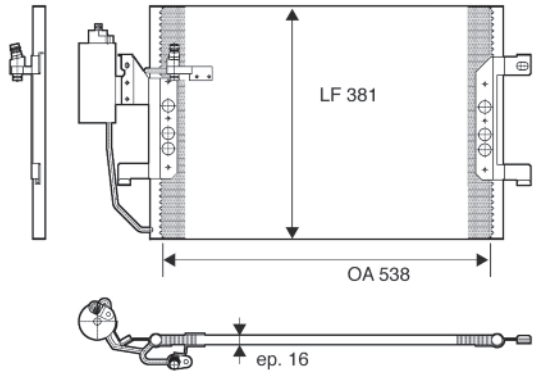


| | | |
|---|---|---|
| MERCEDES 4145000054 | 538x381x16 | |

## 817842 ALM

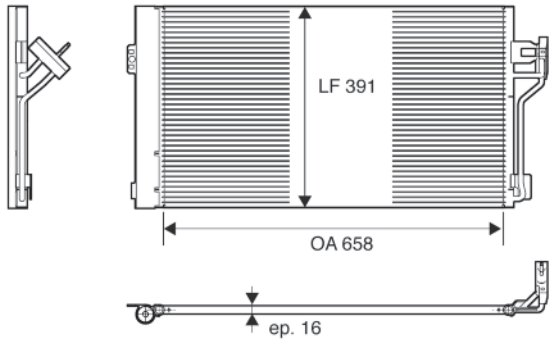


| | | |
|---|---|---|
| MERCEDES 6398350070 | 658x391x16 | |

## 817843 ALM

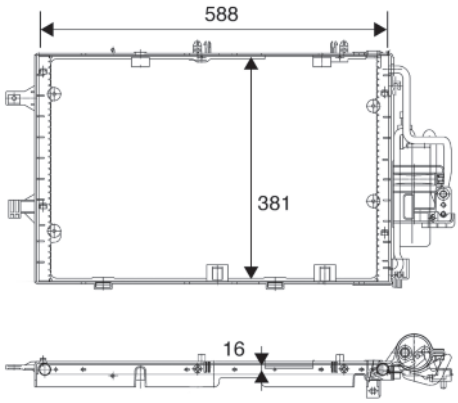


| | | |
|---|---|---|
| OPEL 1850092 | 548x381x16 | |

## 817844 ALM

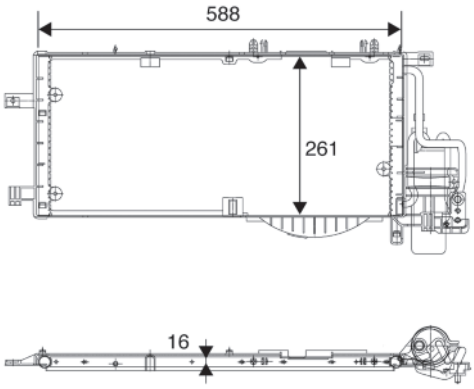


| | | |
|---|---|---|
| OPEL 1850093 | 548x261x16 | |

## 817845 IA1432 ALB

Picture not available
Image non disponible
Imagen no disponible
Immagine non disponibile
Nicht verfügbares Bild
Brak zdjęcia
Картина недоступна

| | | |
|---|---|---|
| CITROEN 0384H5<br>PEUGEOT 0384H5 | 300x147,4x85 | |
| | -temp.sensor | |

## 817848 ALM

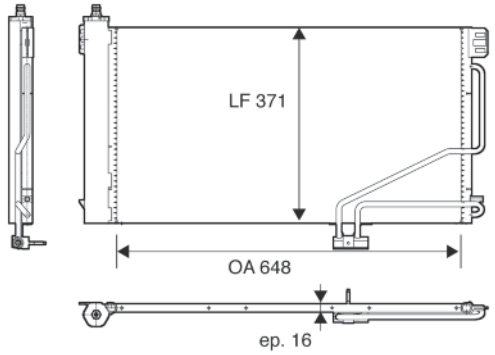


| | | |
|---|---|---|
| MERCEDES 2035000554 | 648x371x16 | |

## 817846 ALB

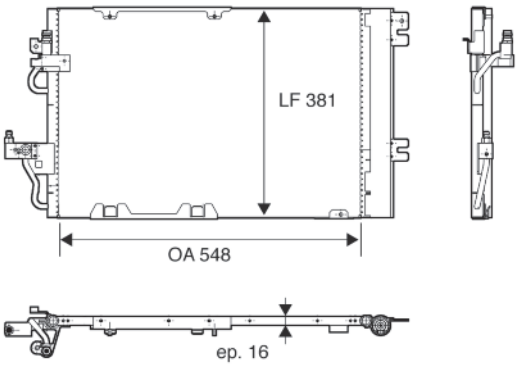


| | | |
|---|---|---|
| OPEL 1850097 | 588x381x16 | |

## 817849 ALM

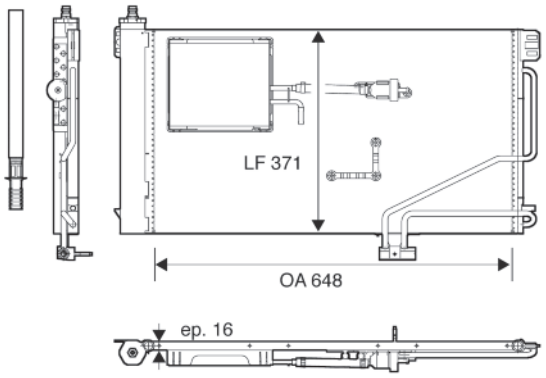


| | | |
|---|---|---|
| MERCEDES 2035001354 | 648x371x16 | |

## 817847 ALM

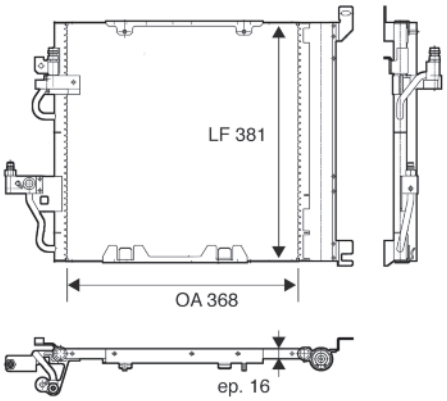


| | | |
|---|---|---|
| OPEL 1850099 | 368x381x16 | |

## 817850 ALM

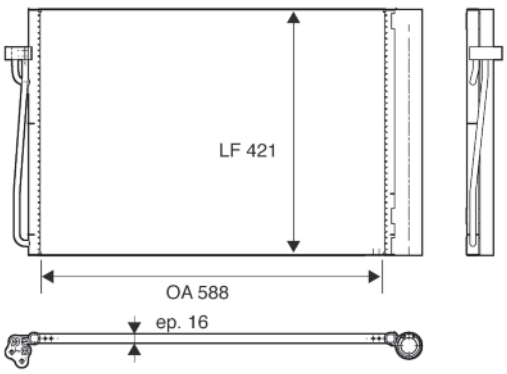


| | | |
|---|---|---|
| BMW 64509122825 | 588x421x16 | |

## 817851 ALM

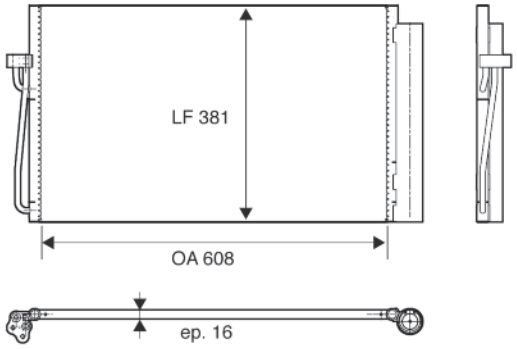


| | | |
|---|---|---|
| BMW 64509122827 | 608x381x16 | |
| | | |

## 817854 IA1404

Picture not available
Image non disponible
Imagen no disponible
Immagine non disponibile
Nicht verfügbares Bild
Brak zdjęcia
Картина недоступна

| | | |
|---|---|---|
| CITROEN 0384G9 | | |
| | -temp.sensor | |

## 817852 CA1428 ALM

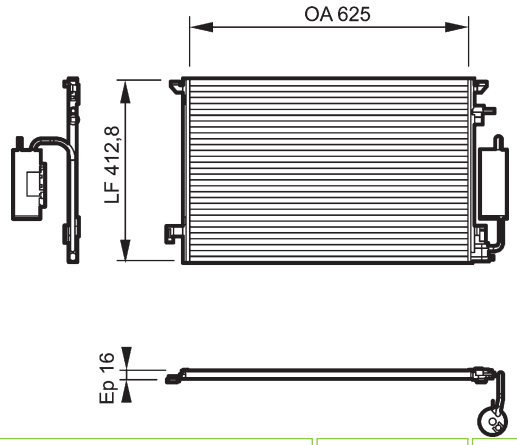


| | | |
|---|---|---|
| OPEL 1850083 | 610x410x16 | |
| | | |

## 817861 ALB

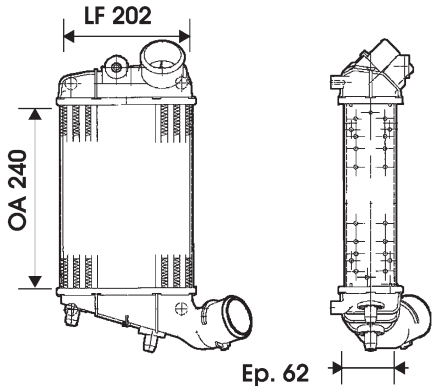


| | | |
|---|---|---|
| ALFA ROMEO 60686738 | 240x202x62 | 54mm L |
| | -temp.sensor | 54mm L |

## 817853 CA1422 ALM

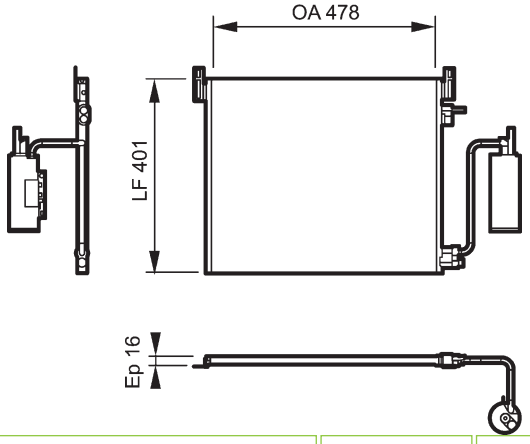


| | | |
|---|---|---|
| OPEL 1850084 | 478x401x16 | |
| | | |

## 817862 ALB

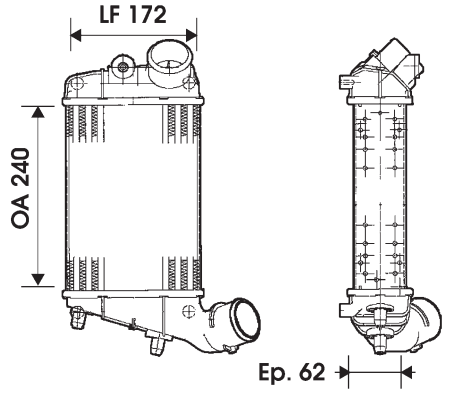


| | | |
|---|---|---|
| ALFA ROMEO 51715999 | 240x172x62 | 55mm L |
| | -temp.sensor | 55mm L |

## 817865 ALB

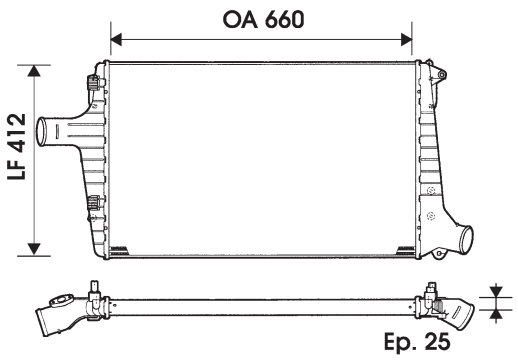


| | | |
|---|---|---|
| AUDI 4B0145805A | 660x412x25 | 55mm L |
| | -temp.sensor | 55mm L |

## 817870 ALB

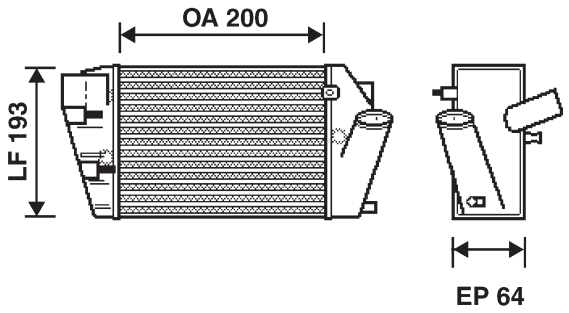


| | | |
|---|---|---|
| AUDI 8E0145806C | 200x193x64 | 42mm L |
| | -temp.sensor | 42mm L |

## 817867 ALB

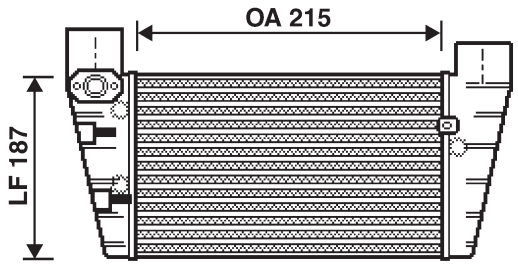


| | | |
|---|---|---|
| AUDI 8E0145805N | 215x196x64 | 53mm L |
| | -temp.sensor | 53mm L |

## 817872 ALB

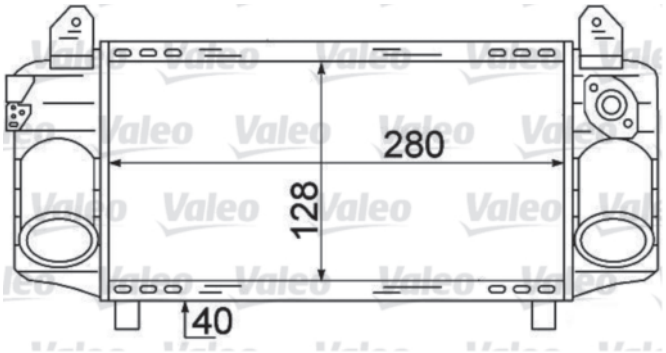


| | | |
|---|---|---|
| AUDI 8Z0145805B | 280x130x40 | 45mm L |
| | -temp.sensor | 45mm L |

## 817869 ALB

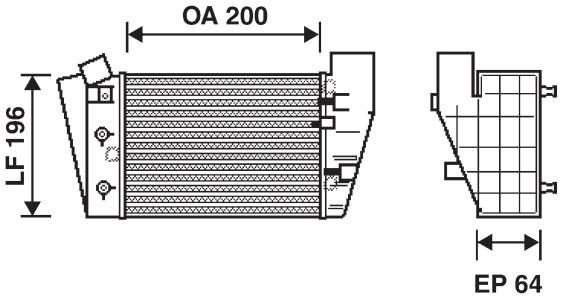


| | | |
|---|---|---|
| AUDI 8E0145805P | 200x193x64 | 48mm L |
| | -temp.sensor | 48mm L |

## 817873 ALB

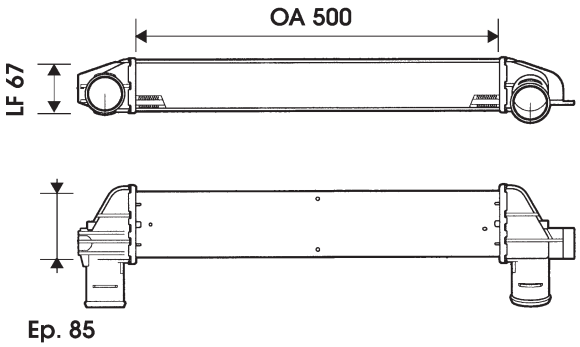


| | | |
|---|---|---|
| BMW 17512243345 | 500x67x85 | 50mm L |
| | -temp.sensor | 50mm L |

## 817874 ALB

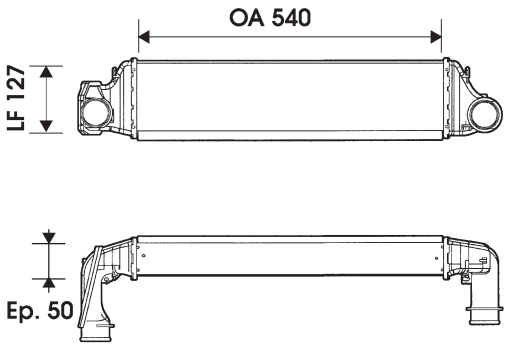


| | | |
|---|---|---|
| BMW 17512246795 | 540x127x50 | 50mm L |
| | -temp.sensor | 50mm L |

## 817877 ALB

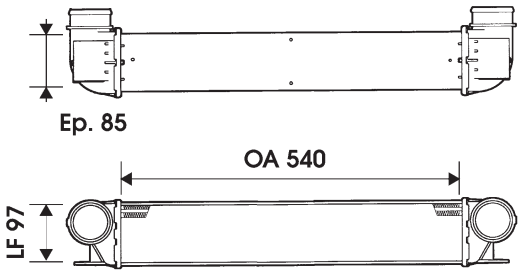


| | | |
|---|---|---|
| BMW 17512247359 | 540x97x85 | 60mm L |
| | -temp.sensor | 60mm L |

## 817875 ALB

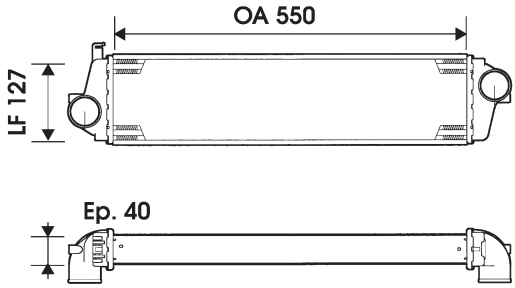


| | | |
|---|---|---|
| BMW 17512245512 | 550x127x40 | 48mm L |
| | -temp.sensor | 48mm L |

## 817879 ALB

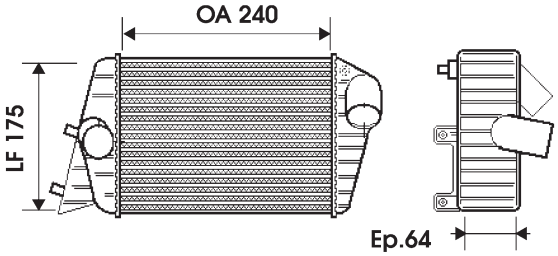


| | | |
|---|---|---|
| FIAT 46745841 | 240x175x64 | L |
| | -temp.sensor | L |

## 817876 ALB

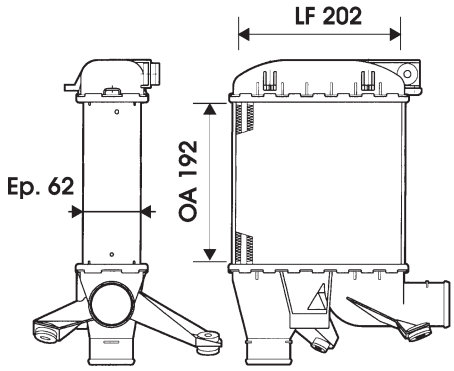


| | | |
|---|---|---|
| BMW 17512246031 | 192x202x62 | 50mm L |
| | -temp.sensor | 50mm L |

## 817881 ALB

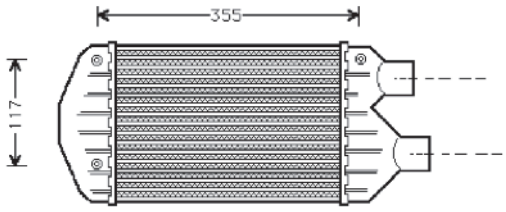


| | | |
|---|---|---|
| FIAT 46440215 | 295x202x62 | 54mm L |
| | -temp.sensor | 54mm L |

## 817882 ALB

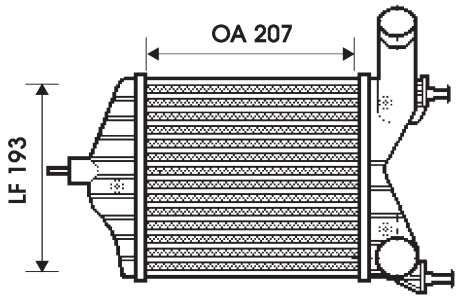


| | | |
|---|---|---|
| FIAT 46836770<br>LANCIA 46836770 | 193x207 | 36mm L |
| | -temp.sensor | 36mm L |

## 817901 ALB

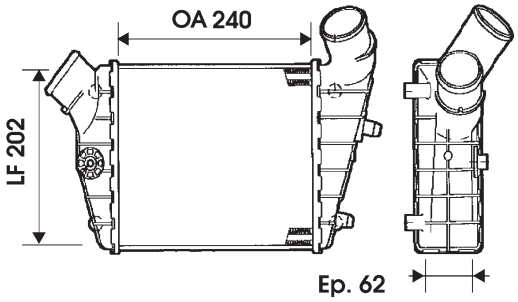


| | | |
|---|---|---|
| LANCIA 46444726 | 240x202x62 | 54mm L |
| | -temp.sensor | 54mm L |

## 817888 ALB

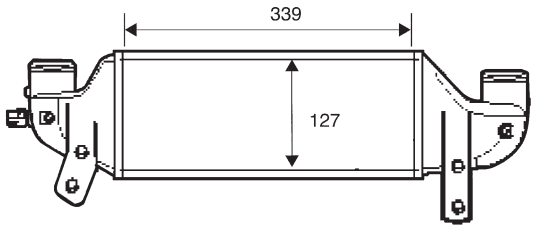


| | | |
|---|---|---|
| FORD 1227171 | 338x127x73 | 50mm L |
| | +temp.sensor | 50mm L |

## 817905 ALB

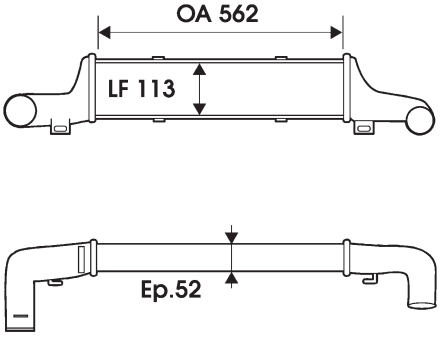


| | | |
|---|---|---|
| MERCEDES 2105001300 | 562x113x52 | 60mm L |
| | -temp.sensor | 60mm L |

## 817891 ALB

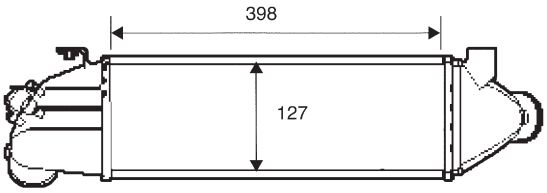


| | | |
|---|---|---|
| FORD 4522847 | 398x127x73 | 55mm L |
| | -temp.sensor | 55mm L |

## 817907 ALB

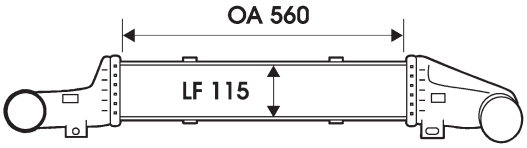


| | | |
|---|---|---|
| MERCEDES 2105002000 | 560x115x50 | 75mm QC |
| | -temp.sensor | 75mm QC |

## 817911 ALB

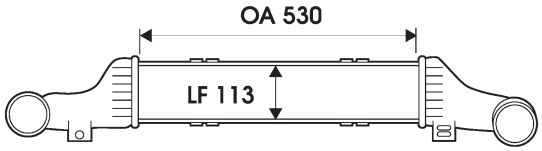


| | | |
|---|---|---|
| MERCEDES 2105002100 | 530x113x66 | 82mm QC |
| | -temp.sensor | 82mm QC |

## 817924 ALB

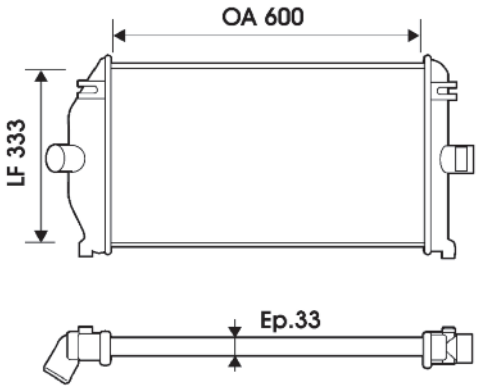


| | | |
|---|---|---|
| RENAULT 7701045349 | 600x333x33 | 52mm L |
| | -temp.sensor | 52mm L |

## 817916 ALB

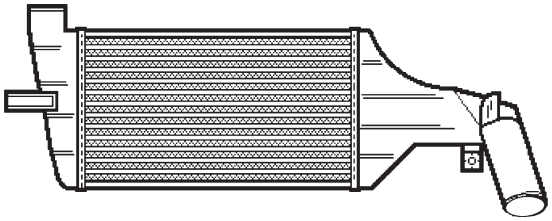

| | | |
|---|---|---|
| OPEL 1302413<br>VAUXHALL 9192587 | 430x113x52 | 42mm L |
| | -temp.sensor | 42mm L |

## 817925 ALB

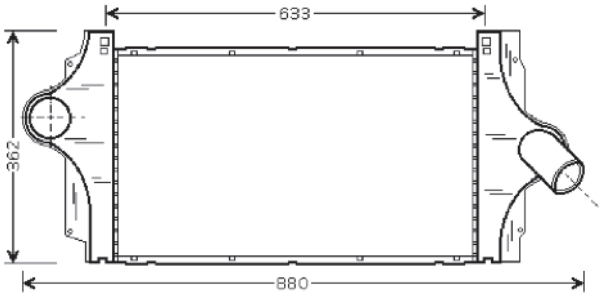


| | | |
|---|---|---|
| RENAULT 6025312322 | 600x326x35 | 53mm L |
| | -temp.sensor | 53mm L |

## 817923 ALB

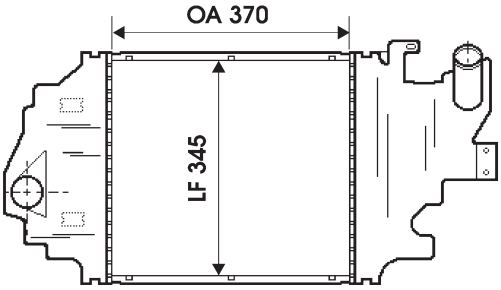


| | | |
|---|---|---|
| RENAULT 8200252209 | 345x370x35 | 49mm L |
| | -temp.sensor | 49mm L |

## 817926 ALB

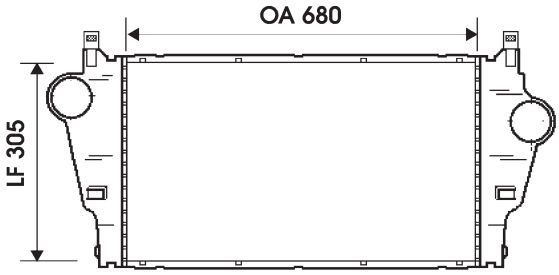


| | | |
|---|---|---|
| RENAULT 8200008761 | 680x305x32 | 53mm L |
| | -temp.sensor | 53mm L |

## 817927 ALB

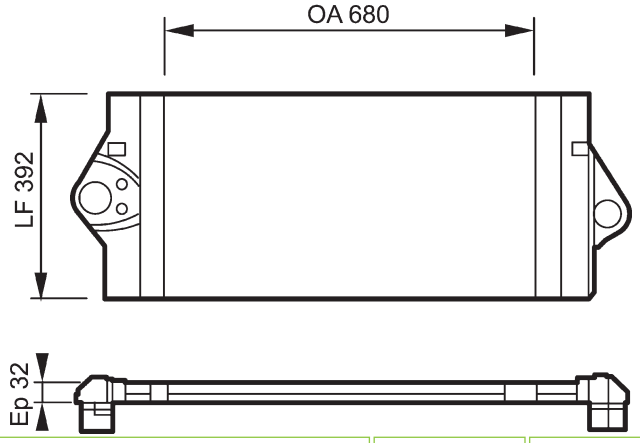


| | | |
|---|---|---|
| RENAULT 8200075810 | 680x392x32 | B |
| | -temp.sensor | L |

## 817937 ALB

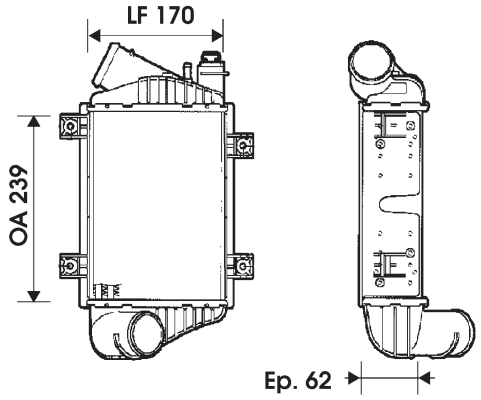


| | | |
|---|---|---|
| VOLKSWAGEN 701145805A | 239x170x62 | 55mm L |
| | -temp.sensor | 55mm L |

## 817931 ALB

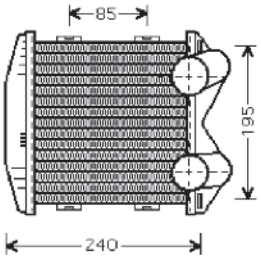


| | | |
|---|---|---|
| MCC 00003007V005000000 | 170x218x50 | 39mm L |
| | -temp.sensor | 39mm L |

## 817941 ALB

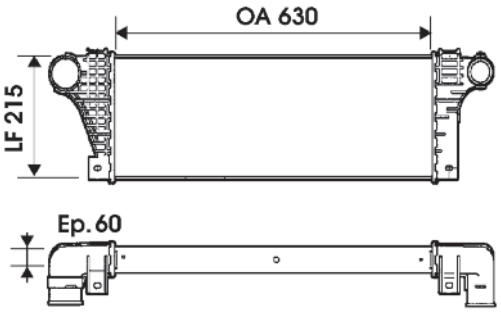


| | | |
|---|---|---|
| IVECO 93822907 | 630x215x60 | 50mm L |
| | -temp.sensor | 50mm L |

## 817936 ALB

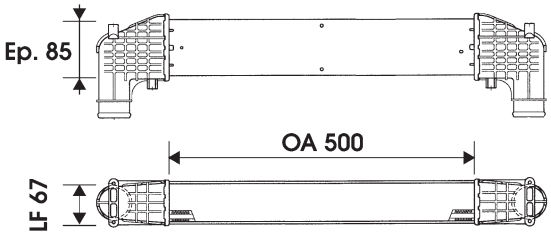


| | | |
|---|---|---|
| FORD 1109138<br>SEAT 7M0145805<br>VOLKSWAGEN 7M0145805 | 500x67x85 | 44mm L |
| | -temp.sensor | 44mm L |

## 817943

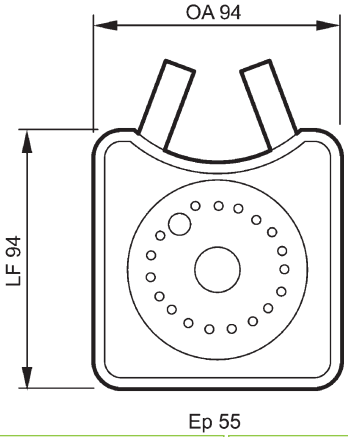


| | | |
|---|---|---|
| AUDI 068117021B<br>FORD 1002825<br>SEAT 068117021B<br>SKODA 068117021B<br>VOLKSWAGEN 068117021B | 94x94x55 | |

## 817994 IA1327 ALB

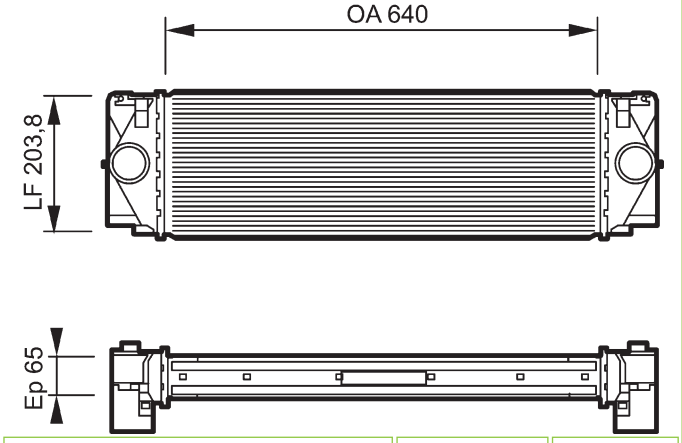


| | | |
|---|---|---|
| MERCEDES 9065010101 | 640x203,8x64 | 57mm L |
| | -temp.sensor | 57mm L |

## 817999 IA1426 ALB

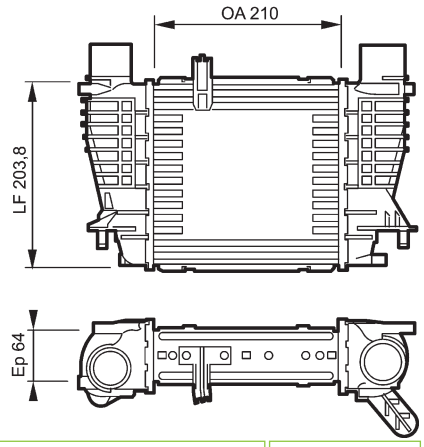


| | | |
|---|---|---|
| RENAULT 8200471888 | 210x203,8x64 | 45mm L |
| | -temp.sensor | 45mm L |

## 817997 ALM

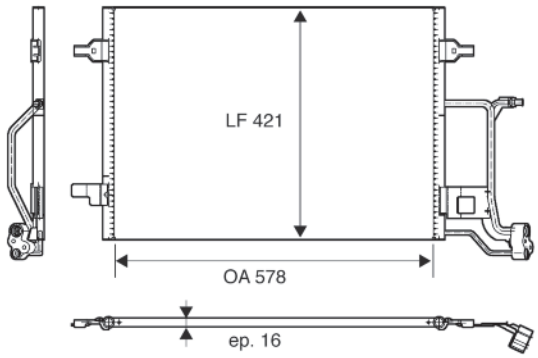


| | | |
|---|---|---|
| AUDI 4B0260403S | 578x421x16 | |

## 818000 CA1481

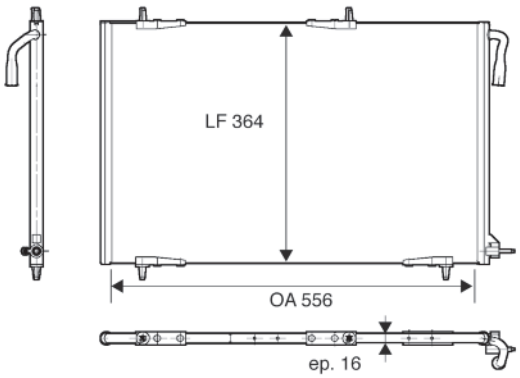


| | | |
|---|---|---|
| PEUGEOT 6455CH | 556x364x16 | |

## 817998 IA1405 ALB

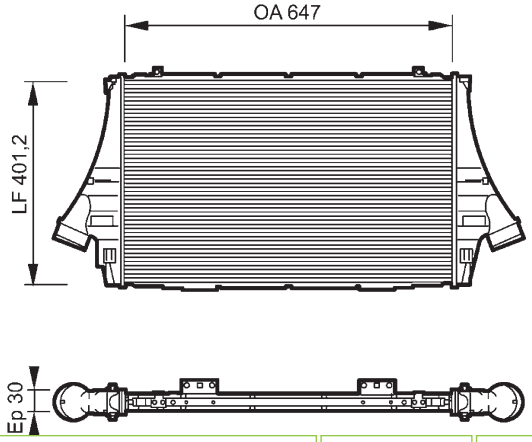


| | | |
|---|---|---|
| OPEL 6302066<br>SAAB 12800599<br>VAUXHALL 12800599 | 647x401,2x30 | 58mm L |
| | -temp.sensor | 58mm L |

## 818001 CA1482

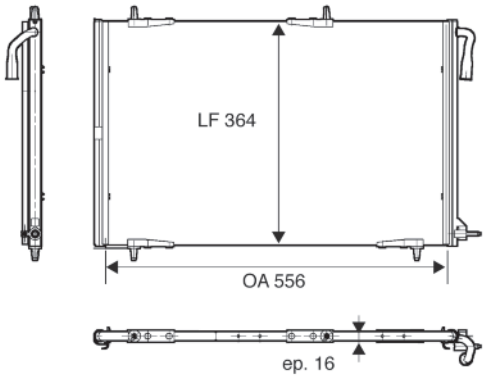


| | | |
|---|---|---|
| PEUGEOT 6455CJ | 556x364x16 | |

## 818002 CA1479

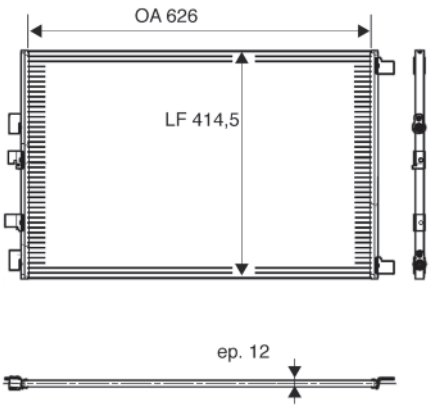


| | | | |
|---|---|---|---|
| RENAULT | 8200325004 | 626x414x12 | |

## 818005 CA1463

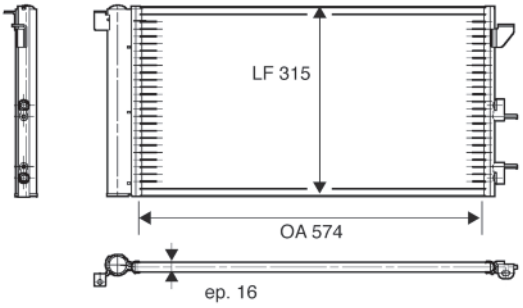


| | | | |
|---|---|---|---|
| FIAT | 51767143 | 574x315x16 | |

## 818003 CA1265

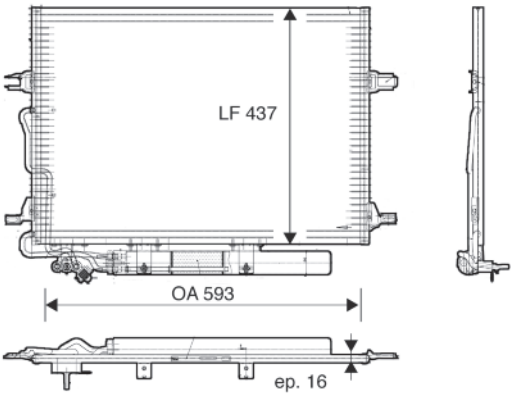


| | | | |
|---|---|---|---|
| MERCEDES | 2115001254 | 593x437x16 | |
| MERCEDES | 2205000054 | | |

## 818006 ALM

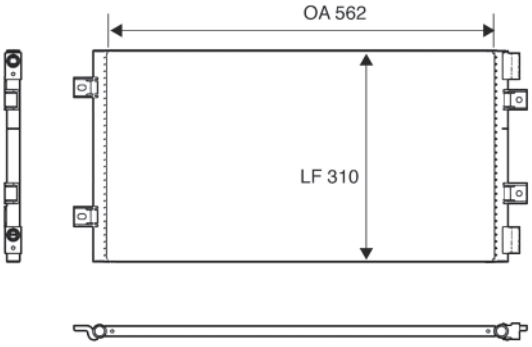


| | | | |
|---|---|---|---|
| FIAT | 46799862 | 562x310x16 | |

## 818004 ALM

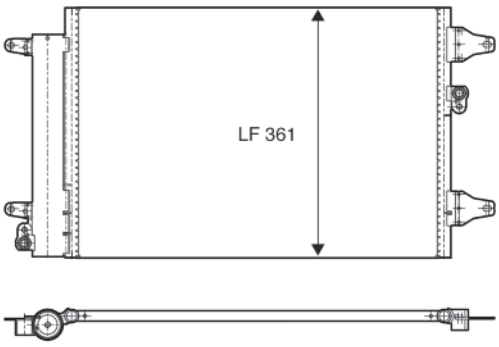


| | | | |
|---|---|---|---|
| FORD | 1108838 | 554x361x16 | |

## 818007 ALM

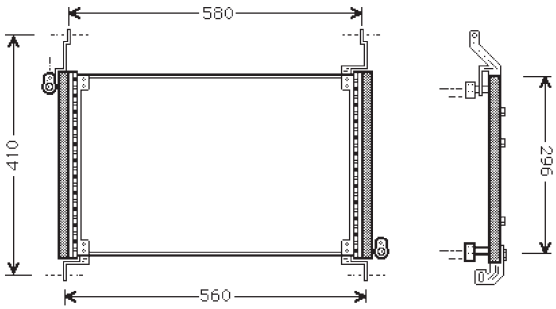


| | | | |
|---|---|---|---|
| FIAT | 46547675 | 574x296x22 | |

## 818008 ALM

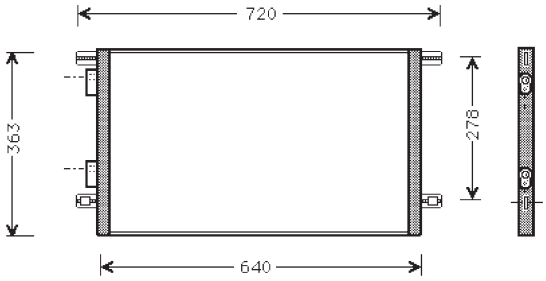


| | | | |
|---|---|---|---|
| RENAULT | 7701045346 | 595x362x16 | |

## 818014 CA1475

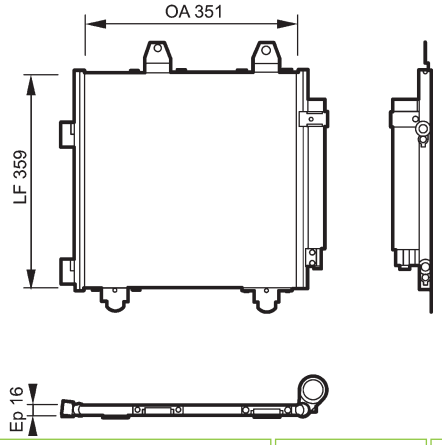


| | | | |
|---|---|---|---|
| CITROEN | 6455EE | 359x351x16 | |
| PEUGEOT | 6455EE | | |
| TOYOTA | 884500H010 | | |

## 818009 ALM

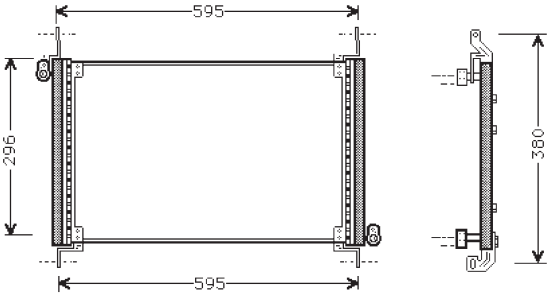


| | | | |
|---|---|---|---|
| FIAT | 46527737 | 556x310x18 | |

## 818015 CA2013

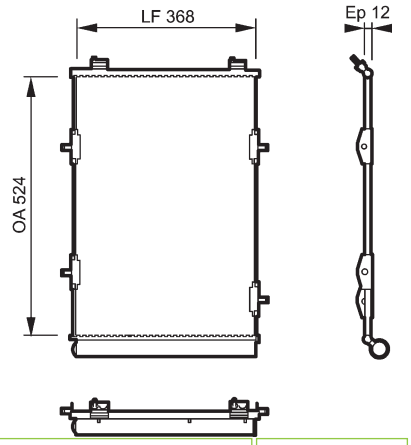


| | | | |
|---|---|---|---|
| CITROEN | 6455EK | 524x368x12 | |
| PEUGEOT | 6455EK | | |

## 818013 CA1470

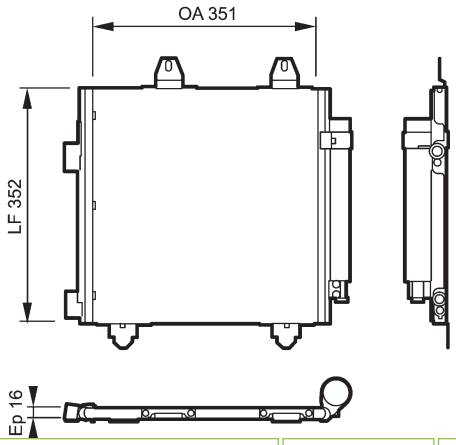


| | | | |
|---|---|---|---|
| CITROEN | 6455EF | 359x351x16 | |
| PEUGEOT | 6455EF | | |
| TOYOTA | 884500H020 | | |

## 818017 ALM

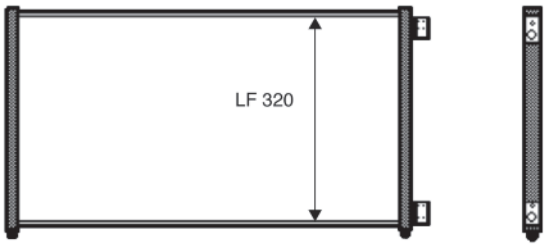


| | | | |
|---|---|---|---|
| FIAT | 46821270 | 560x309x16 | |

## 818018 ALM

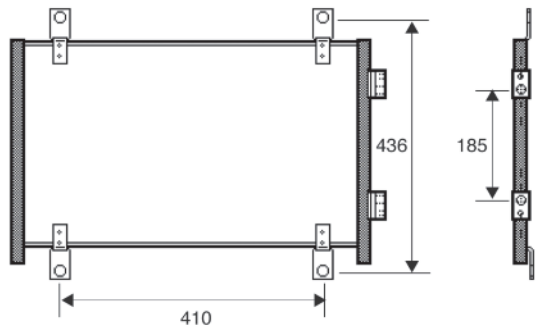


| | | |
|---|---|---|
| CITROEN 6455CG | 506x349x22 | |

## 818021 ALM

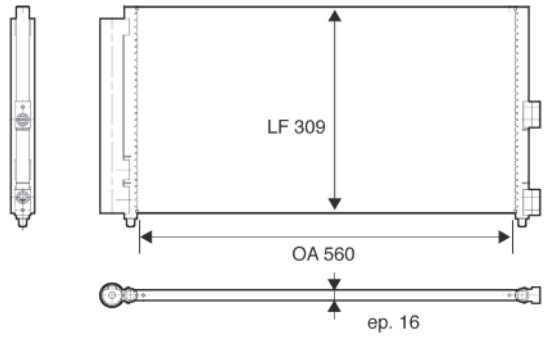


| | | |
|---|---|---|
| FIAT 46820833 | 560x309x16 | |

## 818019 ALM

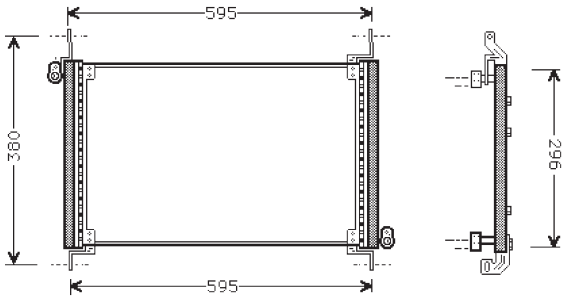


| | | |
|---|---|---|
| FIAT 46532988 | 560x312x18 | |

## 818023 ALM

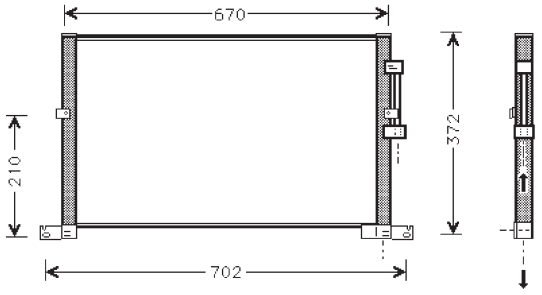


| | | |
|---|---|---|
| JAGUAR C2S5302 | 628x362x16 | |

## 818020 ALM

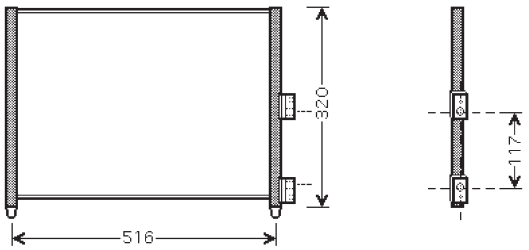


| | | |
|---|---|---|
| FIAT 51708909 | 500x310x16 | |

## 818024 ALM

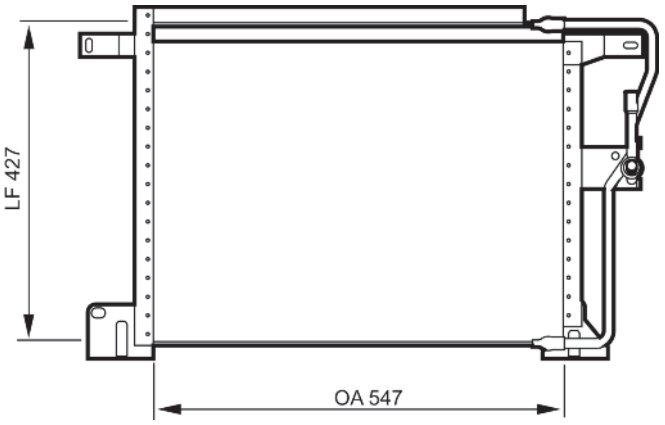


| | | |
|---|---|---|
| JEEP 55036473 | 547x427x25 | |

## 818025 ALM

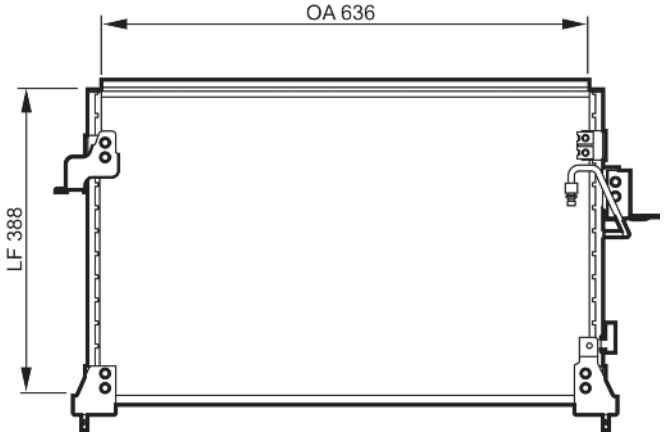


| | | |
|---|---|---|
| LAND ROVER JRB100790 | 636x388x20 | |

## 818029 ALM

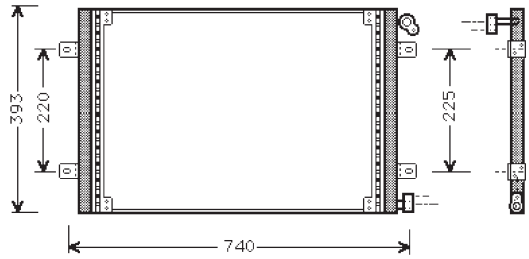


| | | |
|---|---|---|
| RENAULT 6025313325 | 660x384x18 | |

## 818027 ALM

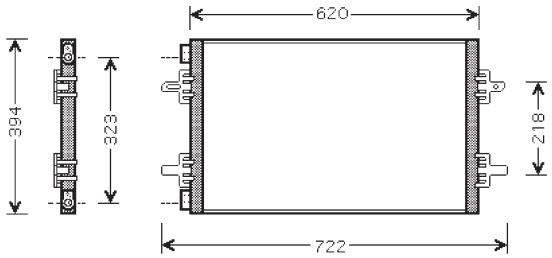


| | | |
|---|---|---|
| RENAULT 6025313367 | 570x394x22 | |

## 818030 ALM

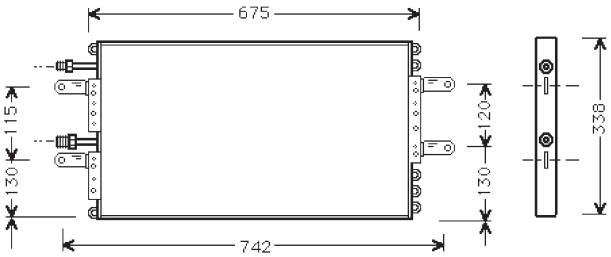


| | | |
|---|---|---|
| RENAULT 6025306732 | 625x338x22 | |

## 818028 ALM

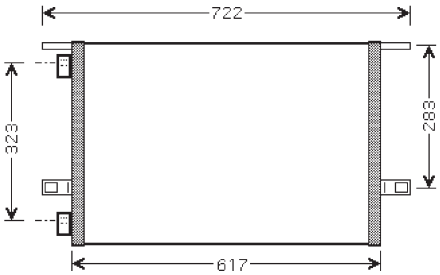


| | | |
|---|---|---|
| RENAULT 6025310510 | 570x393x20 | |

## 818031 ALM

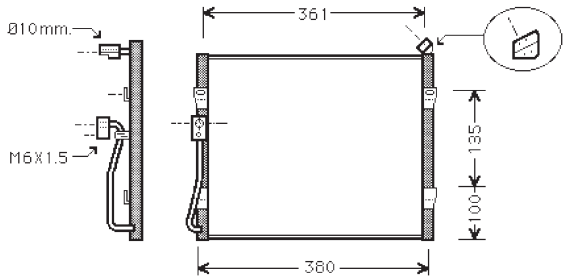


| | | |
|---|---|---|
| ROVER JRB100190 | 330x330x25 | |

## 818032 ALM

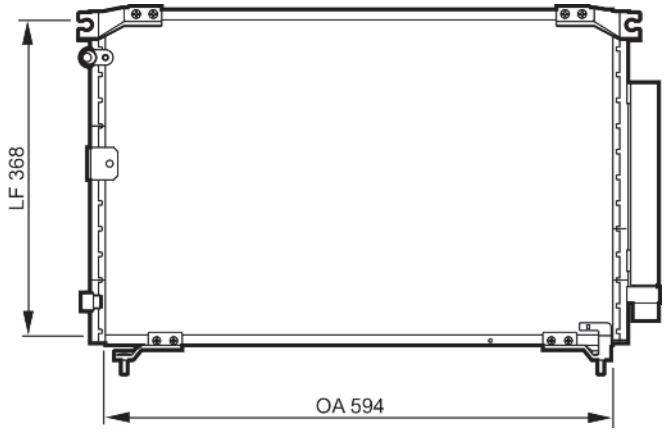


| | | |
|---|---|---|
| TOYOTA 8846044350 | 594x368x16 | |

## 818033

Picture not available
Image non disponible
Imagen no disponible
Immagine non disponibile
Nicht verfügbares Bild
Brak zdjęcia
Картина недоступна

| | | |
|---|---|---|
| MAN 81619200018 | 745x353 | |

## 818034 ALM

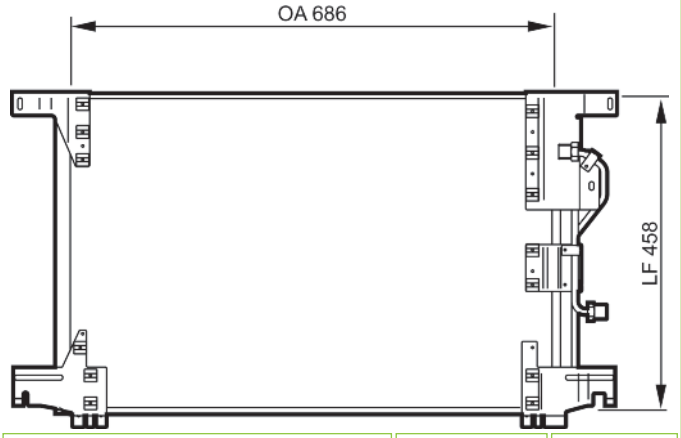


| | | |
|---|---|---|
| MERCEDES 9425000054 | 686x458 | |

## 818035

Picture not available
Image non disponible
Imagen no disponible
Immagine non disponibile
Nicht verfügbares Bild
Brak zdjęcia
Картина недоступна

| | | |
|---|---|---|
| MERCEDES 9705000054 | 500x537 | |

## 818036 ALM

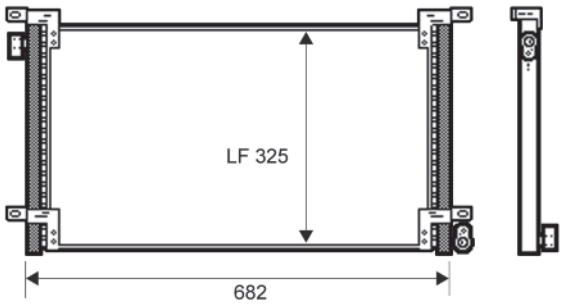


| | | |
|---|---|---|
| IVECO 99487944 | 700x312 | |

## 818037 ALM

Picture not available
Image non disponible
Imagen no disponible
Immagine non disponibile
Nicht verfügbares Bild
Brak zdjęcia
Картина недоступна

| | | |
|---|---|---|
| IVECO 504022601 | 648x310 | |

## 818038

Picture not available
Image non disponible
Imagen no disponible
Immagine non disponibile
Nicht verfügbares Bild
Brak zdjęcia
Картина недоступна

| | | |
|---|---|---|
| IVECO TRUCKS 8189330 | 570x480 | |
| | | |

## 818039

Picture not available
Image non disponible
Imagen no disponible
Immagine non disponibile
Nicht verfügbares Bild
Brak zdjęcia
Картина недоступна

| | | |
|---|---|---|
| VOLVO TRUCKS 8157212 | 365x534 | |
| | | |

## 818040

Picture not available
Image non disponible
Imagen no disponible
Immagine non disponibile
Nicht verfügbares Bild
Brak zdjęcia
Картина недоступна

| | | |
|---|---|---|
| MAN 81619200012 | 678x305 | |
| | | |

## 818041

Picture not available
Image non disponible
Imagen no disponible
Immagine non disponibile
Nicht verfügbares Bild
Brak zdjęcia
Картина недоступна

| | | |
|---|---|---|
| MAN 81619206011 | 688x260 | |
| | | |

## 818042

Picture not available
Image non disponible
Imagen no disponible
Immagine non disponibile
Nicht verfügbares Bild
Brak zdjęcia
Картина недоступна

| | | |
|---|---|---|
| MAN 81619206018 | 678x260 | |
| | | |

## 818043

Picture not available
Image non disponible
Imagen no disponible
Immagine non disponibile
Nicht verfügbares Bild
Brak zdjęcia
Картина недоступна

| | | |
|---|---|---|
| MAN 81619200011 | 585x250 | |
| | | |

## 818044

Picture not available
Image non disponible
Imagen no disponible
Immagine non disponibile
Nicht verfügbares Bild
Brak zdjęcia
Картина недоступна

| | | |
|---|---|---|
| MAN 81619206026 | 652x286 | |

## 818050 ALM

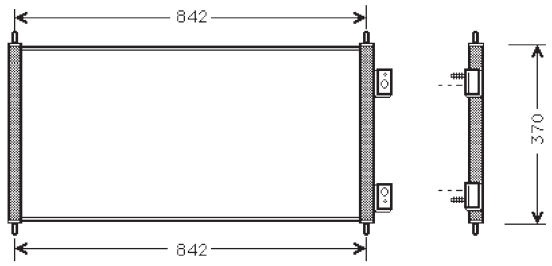


| | | |
|---|---|---|
| FORD 4041973 | 805x360x20 | |

## 818046 ALB

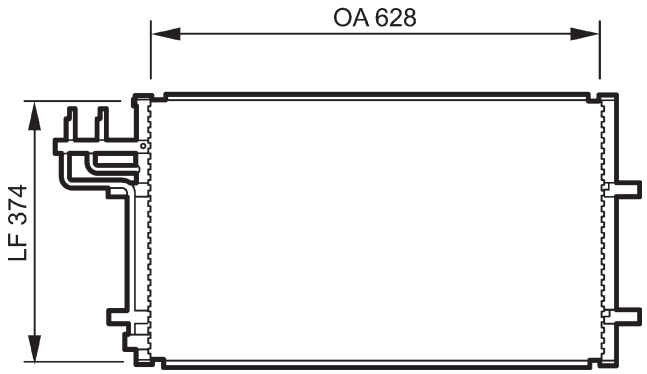


Ep 16

| | | |
|---|---|---|
| FORD 1335552 | 628x374x16 | |

## 818070 ALM

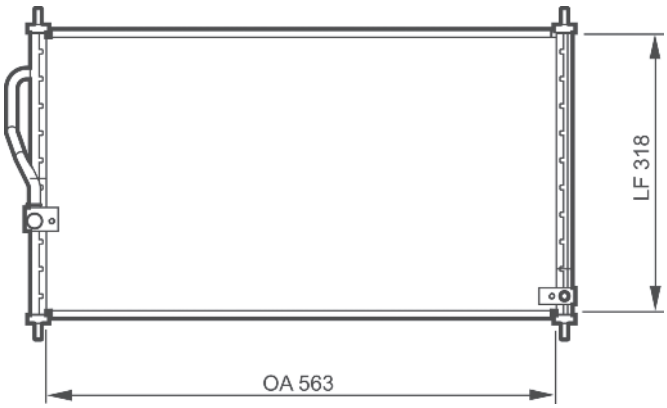


| | | |
|---|---|---|
| HONDA 80110S10003 | 563x318x22 | |

## 818047 ALM

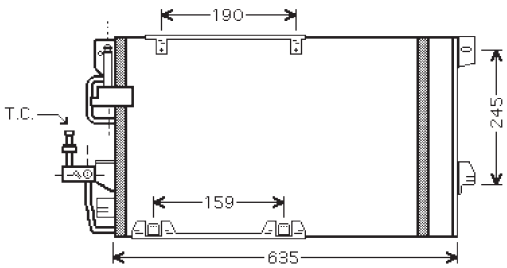


| | | |
|---|---|---|
| OPEL 1850073 | 555x382x16 | |

## 818081 ALM

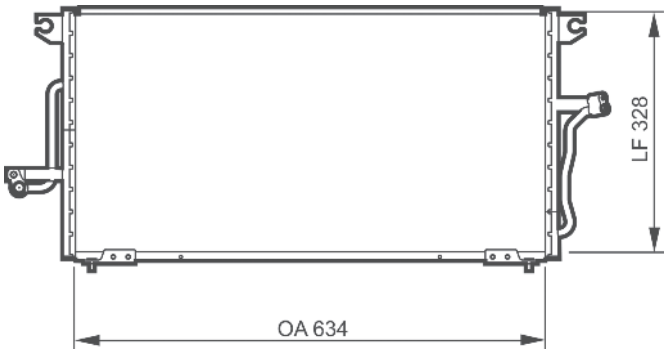


| | | |
|---|---|---|
| MITSUBISHI MB813733 | 634x328x25 | |

## 818084 ALM

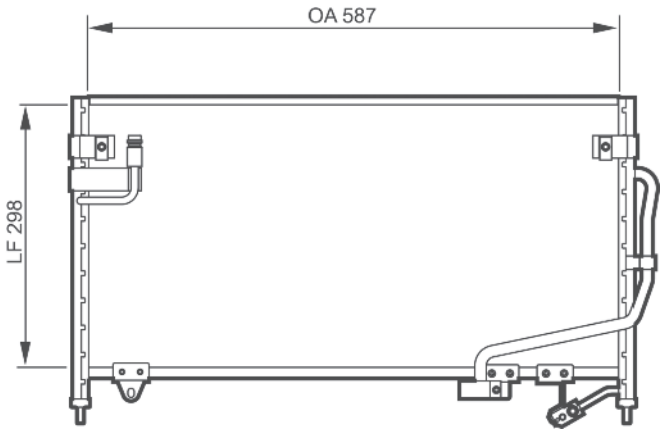


| | | |
|---|---|---|
| MAZDA B01A61480 | 587x298x20 | |

## 818085 ALM

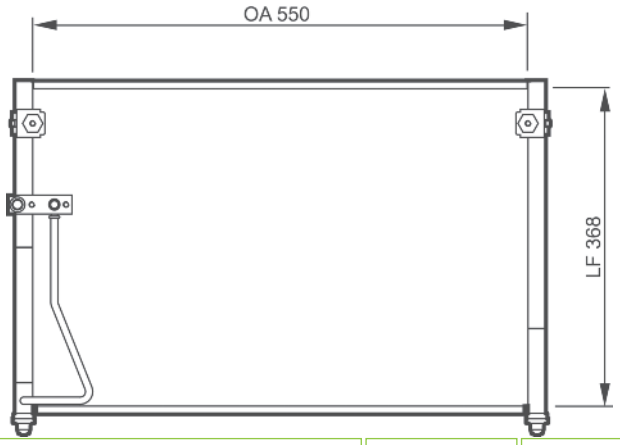


| | | |
|---|---|---|
| MAZDA GE4T61480B | 550x368x20 | |

## 818086 ALM

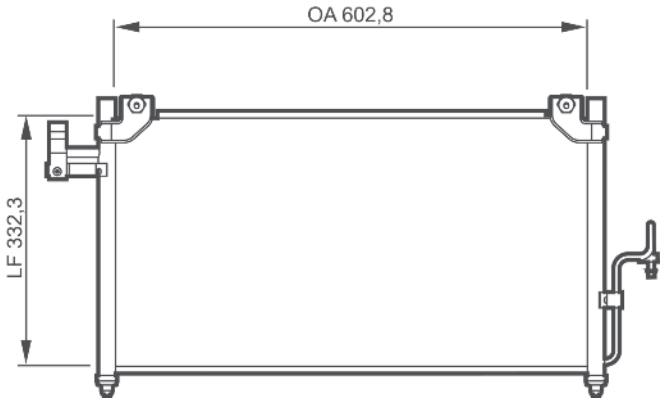


| | | |
|---|---|---|
| MAZDA BK2K61480B | 602,8x332,3x20 | |

## 818087 ALM

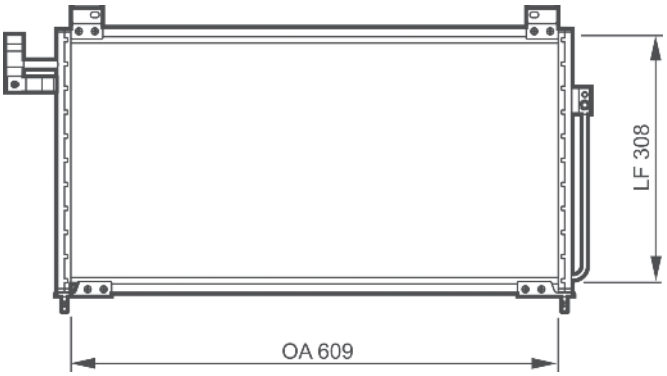


| | | |
|---|---|---|
| MAZDA B25F61480B | 609x308x20 | |

## 818088 ALM

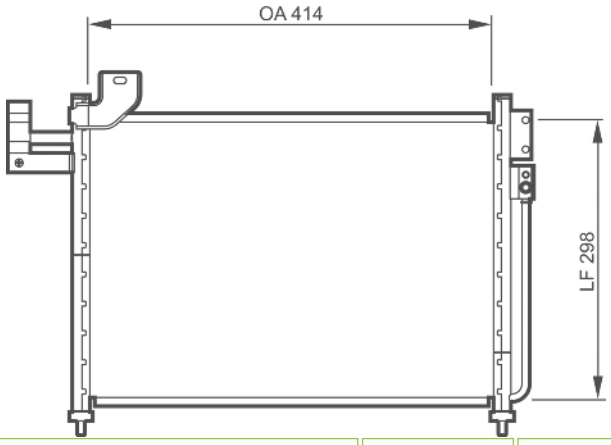


| | | |
|---|---|---|
| MAZDA BJ3A61480C | 414x298x18 | |

## 818090 ALM

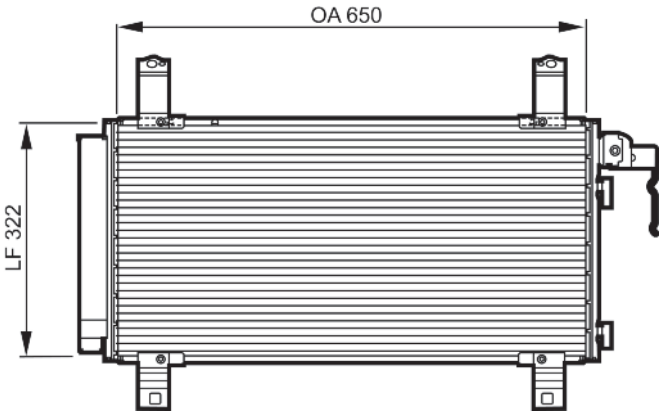


| | | |
|---|---|---|
| MAZDA GJYA6148ZA | 650x322x16 | |

## 818092 ALM

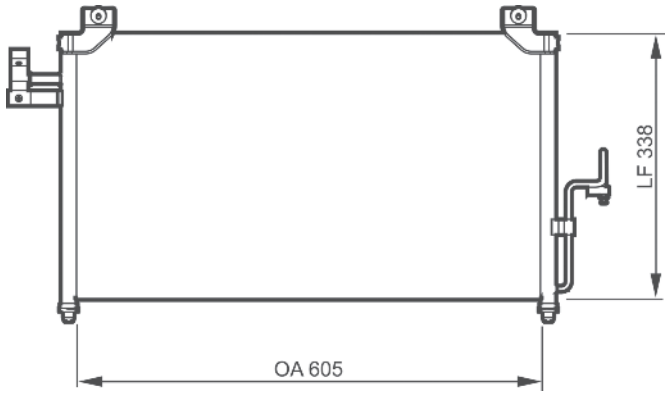


| | | |
|---|---|---|
| MAZDA C10061480 | 605x338x21 | |

## 818104 ALM

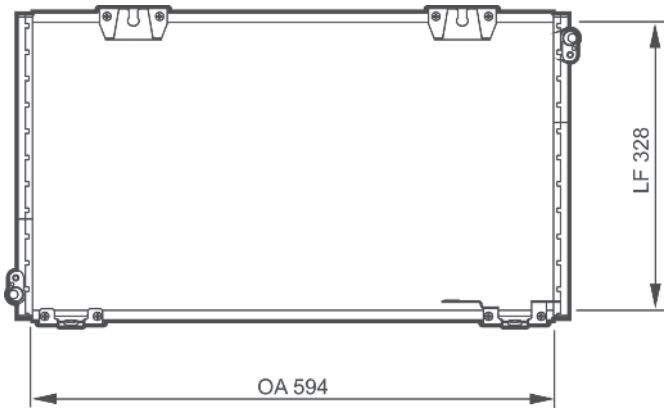


| | | |
|---|---|---|
| TOYOTA 8846020470 | 594x328x25 | |

## 818101 ALM

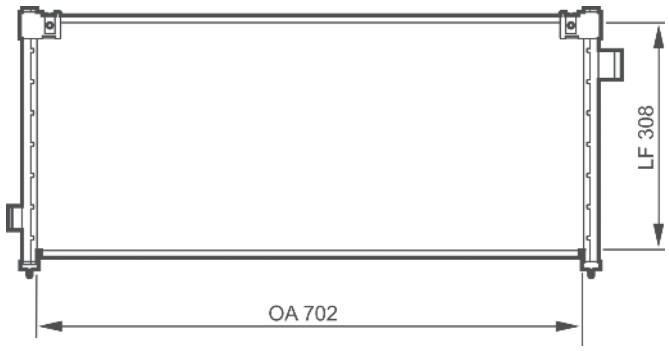


| | | |
|---|---|---|
| SUBARU 73210AC050 | 702x308x16 | |

## 818105 ALM

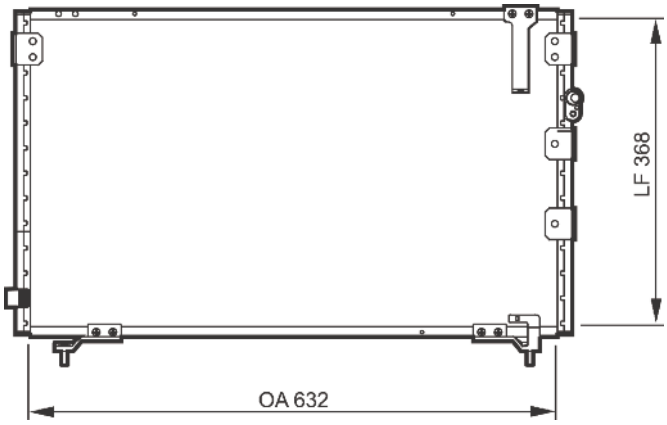


| | | |
|---|---|---|
| TOYOTA 8846044030 | 632x368x17 | |

## 818103 ALM

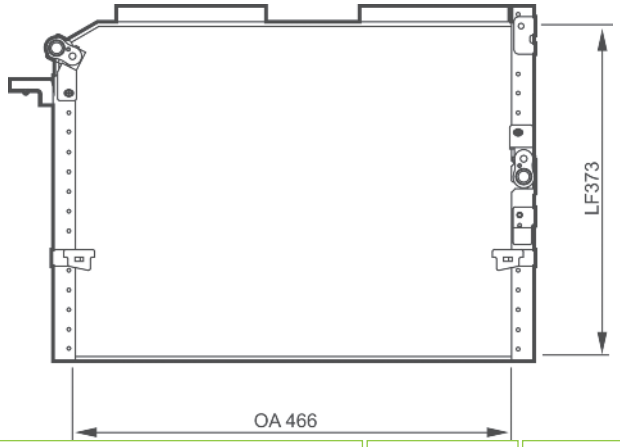


| | | |
|---|---|---|
| TOYOTA 8846035090 | 466x373x32 | |

## 818107 ALM

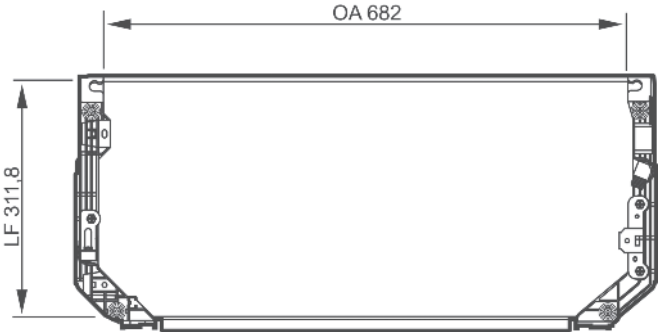


| | | |
|---|---|---|
| TOYOTA 8846012480 | 682x311,8x22 | |

## 818114 ALM

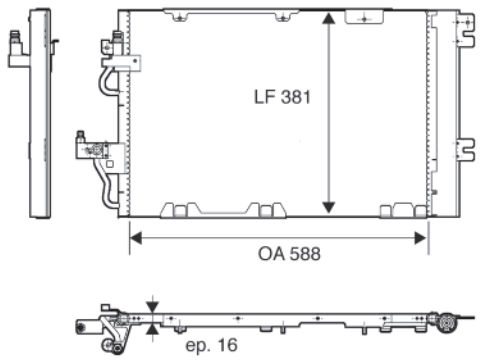


| | | |
|---|---|---|
| OPEL 1850098 | 588x381x16 | |

## 818162 CA1546

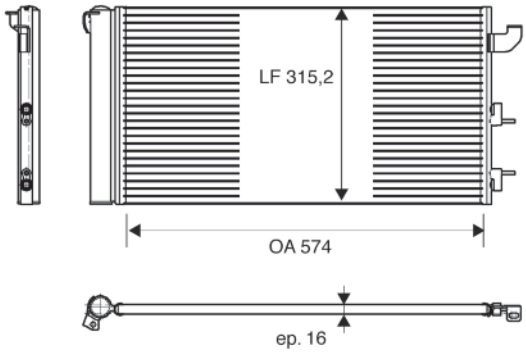


| | | |
|---|---|---|
| FIAT 51782753 | 574x315x16 | |

## 818116

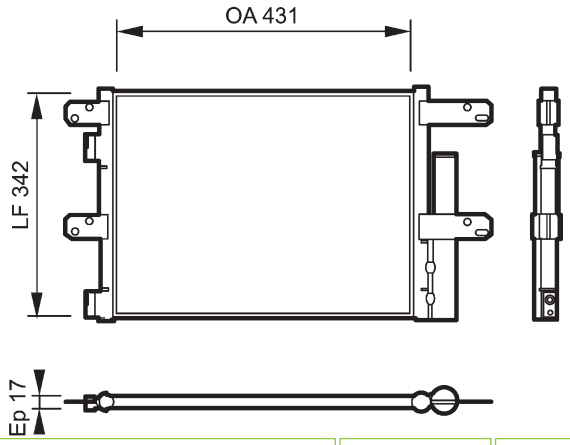


| | | |
|---|---|---|
| IVECO TRUCKS 504080822 | 439x345 | |

## 818165 CA1531

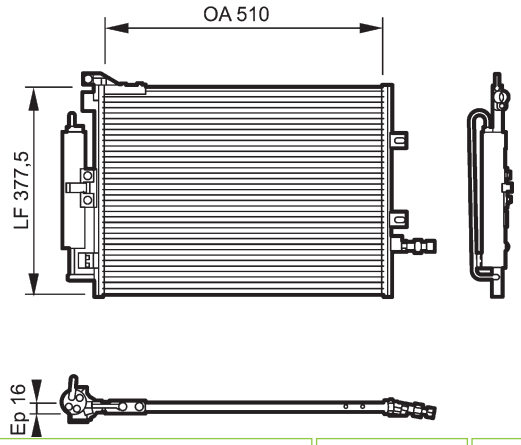


| | | |
|---|---|---|
| RENAULT 8200443897 | 510x377x16 | |

## 818118 ALM

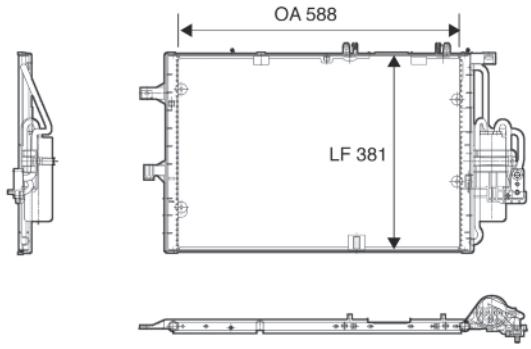


| | | |
|---|---|---|
| OPEL 1850089 | 588x381 | |

## 818166 CA1532

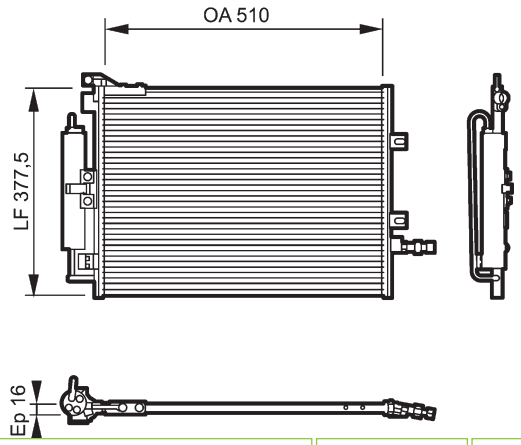


| | | |
|---|---|---|
| RENAULT 8200468911 | 547x377x16 | |

## 818168 ALM

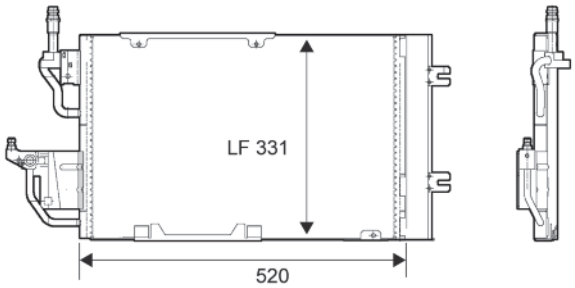


| | | |
|---|---|---|
| OPEL 1850111 | 520x331x12 | |

## 818172 ALM

Picture not available
Image non disponible
Imagen no disponible
Immagine non disponibile
Nicht verfügbares Bild
Brak zdjęcia
Картина недоступна

| | | |
|---|---|---|
| RENAULT TRUCKS 5010315372 | | |

## 818170 ALB

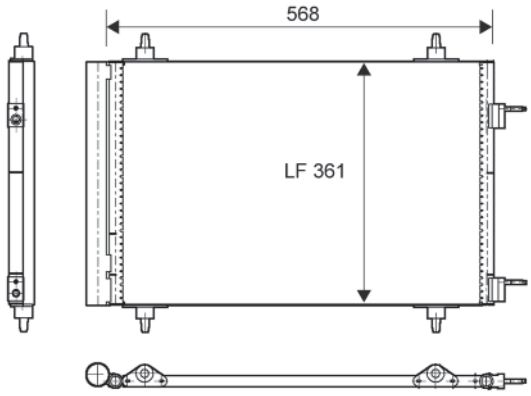


| | | |
|---|---|---|
| CITROEN 6455GK | 568x361x12 | |

## 818173 CA1483

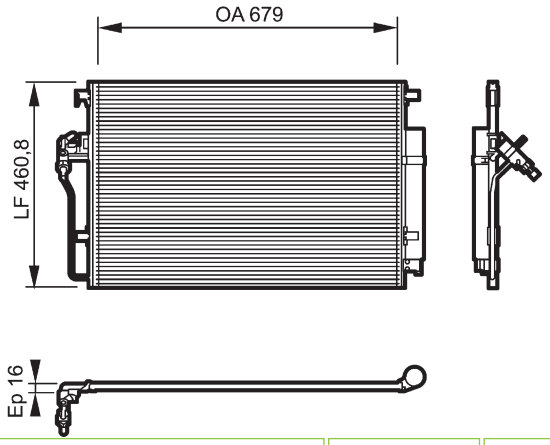


| | | |
|---|---|---|
| MERCEDES 9065000054<br>VOLKSWAGEN 2E0820413 | 679x461x16 | |

## 818171 ALB

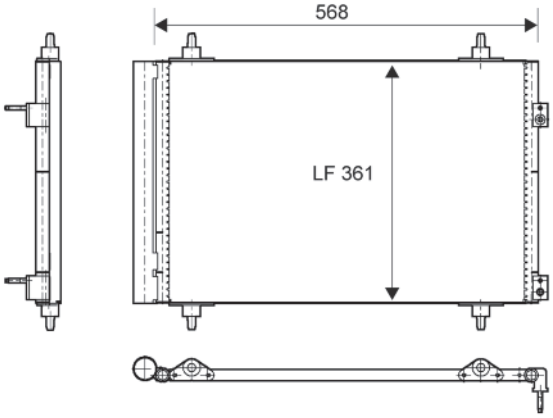


| | | |
|---|---|---|
| CITROEN 6455CX | 568x361x12 | |

## 818175 CA1456

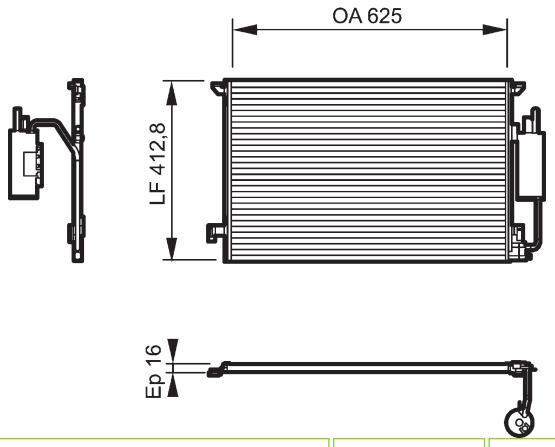


| | | |
|---|---|---|
| SAAB 12804660 | 625x412 | |

## 818187 ALB

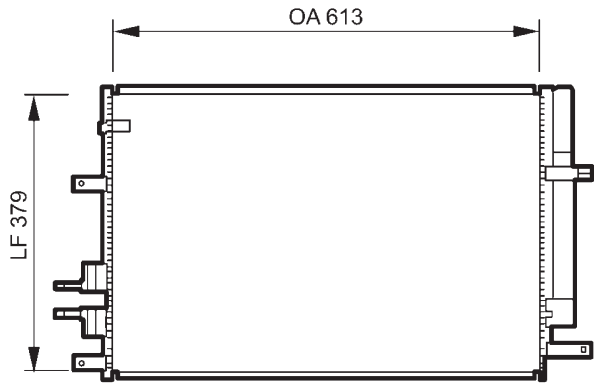


Ep 12

| | | |
|---|---|---|
| ALFA ROMEO 60694767 | 613x379x12 | |

## 818192 ALM

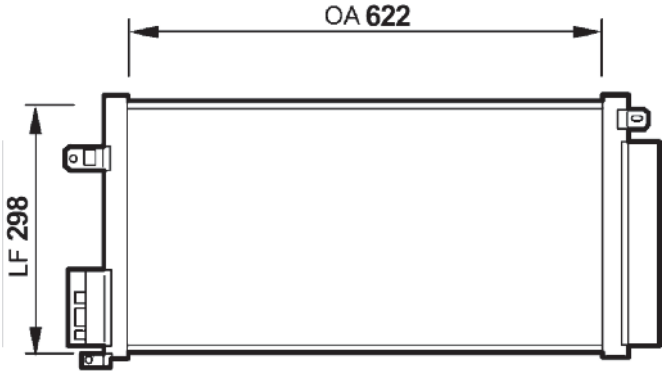


Ep 16

| | | |
|---|---|---|
| FIAT 55700408 | 540x263x16 | |

## 818190 ALB

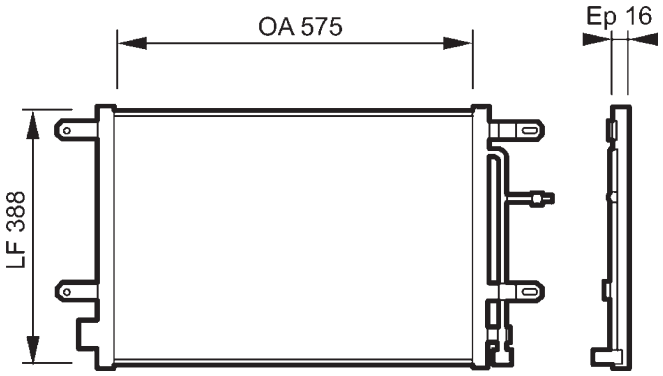


| | | |
|---|---|---|
| AUDI 8E0260403R | 608x381x16 | |

## 818193 ALM

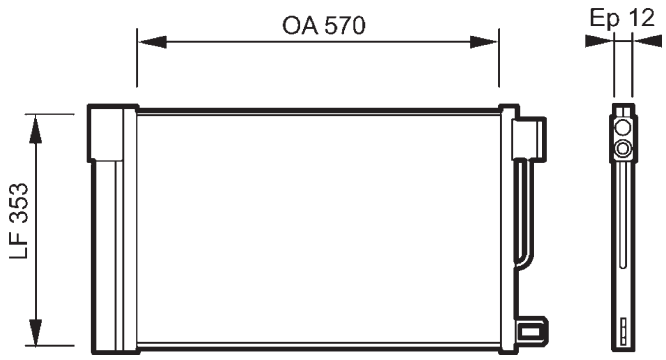


| | | |
|---|---|---|
| CITROEN 6455GA | 570x353x12 | |

## 818191 ALB

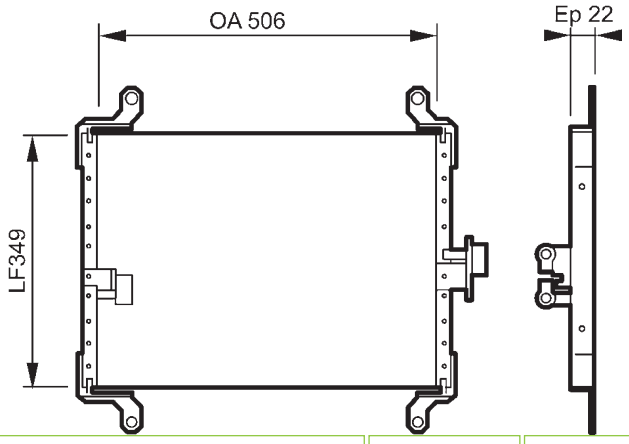


| | | |
|---|---|---|
| CITROEN 6455T3 | 506x349x22 | |

## 818194 ALB

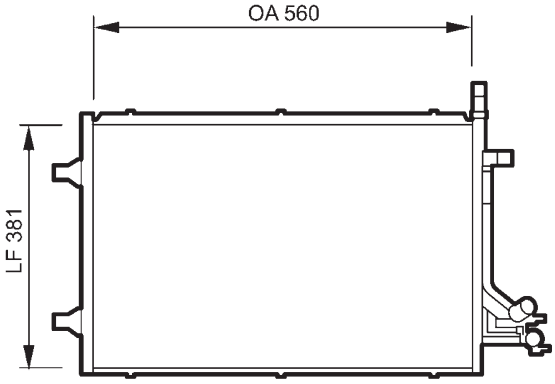


Ep 16

| | | |
|---|---|---|
| FORD 1334653 | 560x381x16 | |

## 818195 ALM

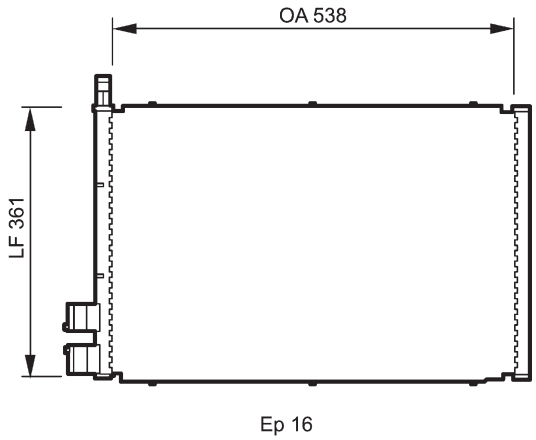


| | | |
|---|---|---|
| FORD 1363775 | 537x365x16 | |
| | | |

## 818226 IA2001

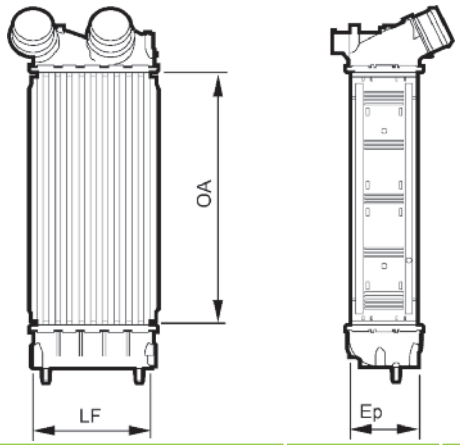


| | | |
|---|---|---|
| PEUGEOT 0384N9 | | |
| | -temp.sensor | |

## 818213 ALB

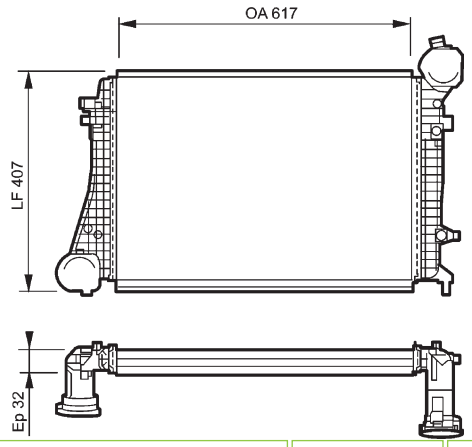


| | | |
|---|---|---|
| AUDI 1K0145803F<br>SEAT 1K0145803F<br>SKODA 1K0145803F<br>VOLKSWAGEN 1K0145803F | 617x407x32 | QC |
| | -temp.sensor | QC |

## 818227 IA2006

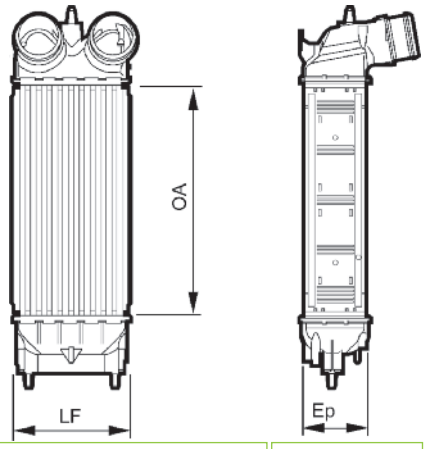


| | | |
|---|---|---|
| CITROEN 1440Q9 | | |
| | -temp.sensor | |

## 818225

Picture not available
Image non disponible
Imagen no disponible
Immagine non disponibile
Nicht verfügbares Bild
Brak zdjęcia
Картина недоступна

| | | |
|---|---|---|
| FORD 4164696 | | |
| | -temp.sensor | |

## 818229 ALB

Picture not available
Image non disponible
Imagen no disponible
Immagine non disponibile
Nicht verfügbares Bild
Brak zdjęcia
Картина недоступна

| | | |
|---|---|---|
| FIAT 51718679 | 410x116,2x40 | L |
| | -temp.sensor | L |

## 818239 IA1438

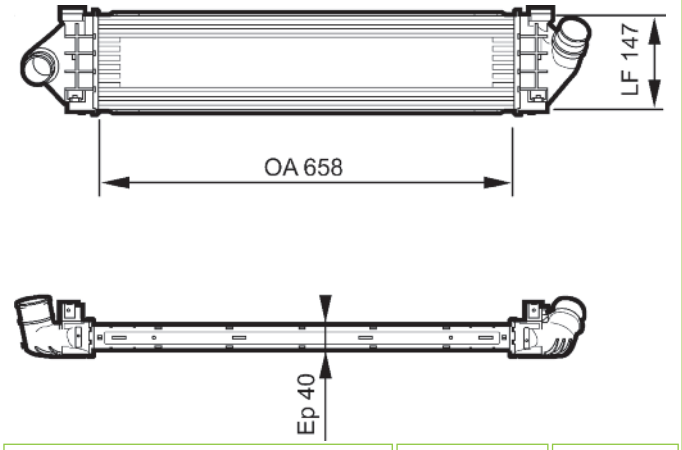


| | | |
|---|---|---|
| FORD 1429406 | 658x147 | |
| | -temp.sensor | |

## 818244 IA2005 ALB

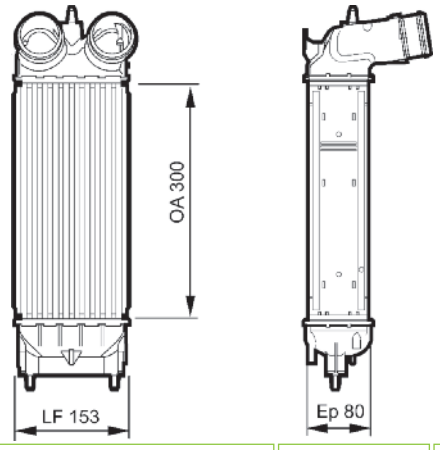


| | | |
|---|---|---|
| CITROEN 0384P5 | 300x153 | |
| | -temp.sensor | |

## 818240 IA1439 ALB

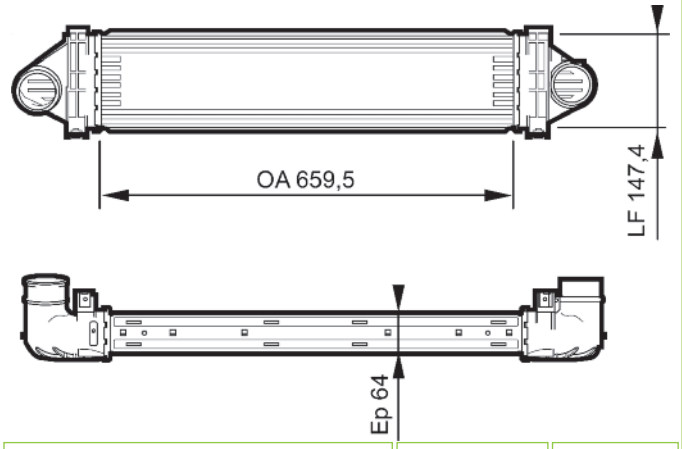


| | | |
|---|---|---|
| FORD 1433631 | 659,5x147,4 | |
| | -temp.sensor | |

## 818245 IA1427 ALB

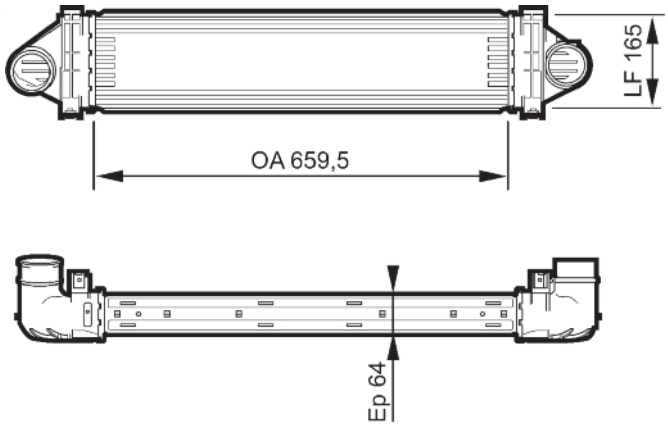


| | | |
|---|---|---|
| FORD 1674066 | 659,5x165 | |
| | -temp.sensor | |

## 818241 IA1442 ALB

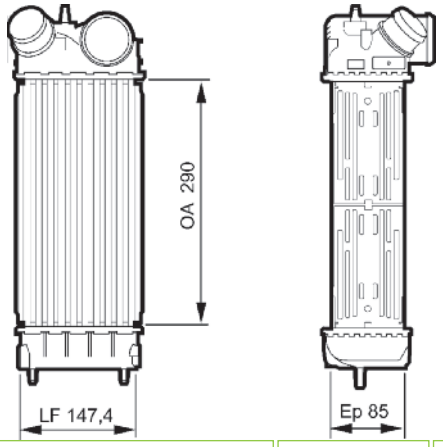


| | | |
|---|---|---|
| FORD 1722905 | 290x147,4 | |
| | -temp.sensor | |

## 818246 IA1420

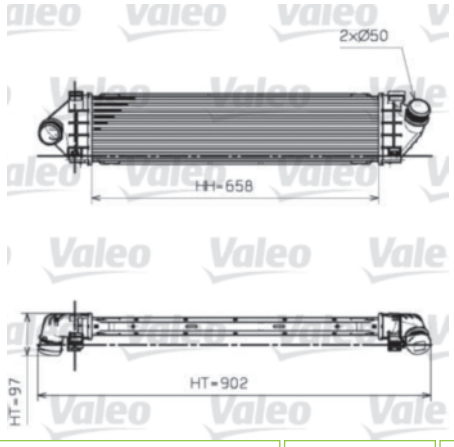


| | | |
|---|---|---|
| FORD 1429405 | | |
| | -temp.sensor | |

## 818249 IA1419 ALB

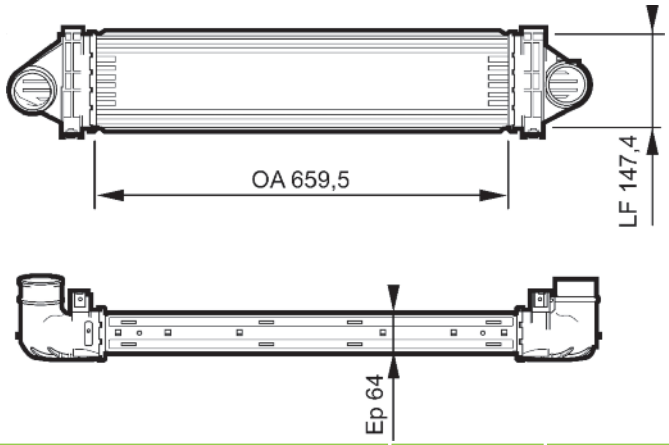


| | | |
|---|---|---|
| LAND ROVER LR009802 | 659,5x147,4 | |
| | -temp.sensor | |

## 818252 IA2015 ALB

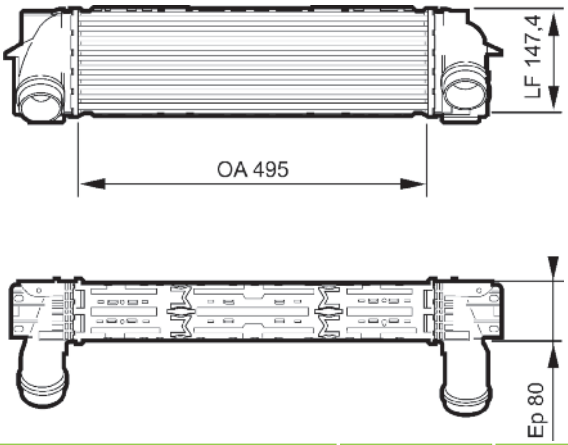


| | | |
|---|---|---|
| BMW 17517823570 | 495x147,4 | |
| | -temp.sensor | |

## 818250 ALB

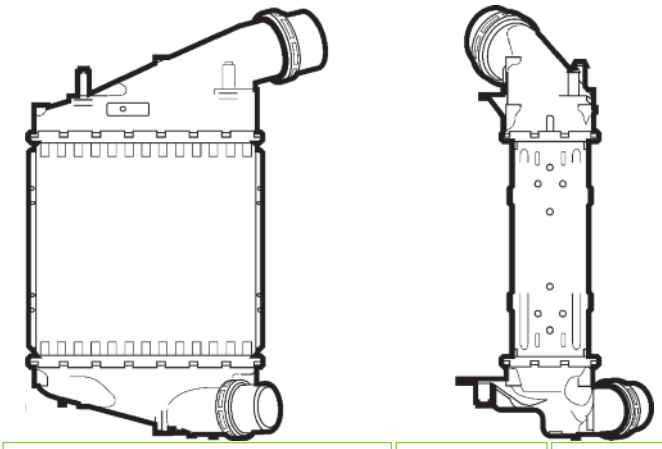

| | | |
|---|---|---|
| RENAULT 144613211R | 189,7x183,4 | |
| | -temp.sensor | |

## 818253 IA2014

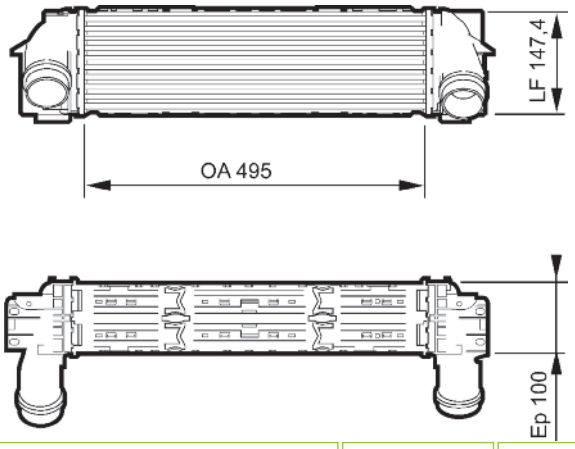


| | | |
|---|---|---|
| BMW 17517593845 | 495x147,4 | |
| | -temp.sensor | |

## 818251 ALB

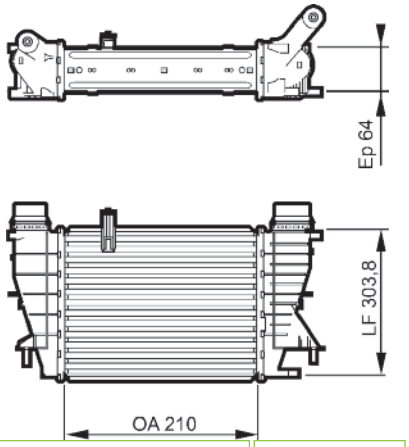


| | | |
|---|---|---|
| RENAULT 144618748R | 210x203,8 | |
| | -temp.sensor | |

## 818254 IA2013 ALB

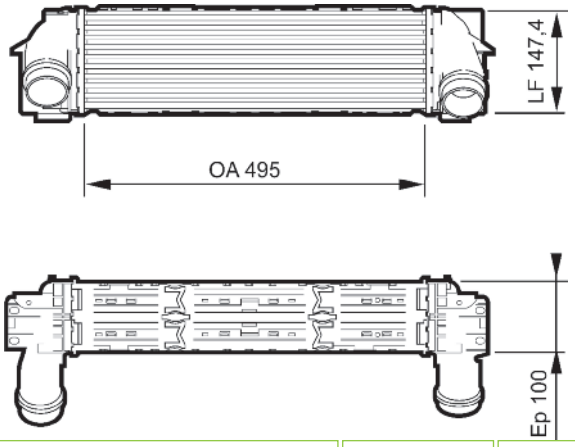


| | | |
|---|---|---|
| BMW 17517823571 | 495x147,4 | |
| | -temp.sensor | |

## 818259 ALB

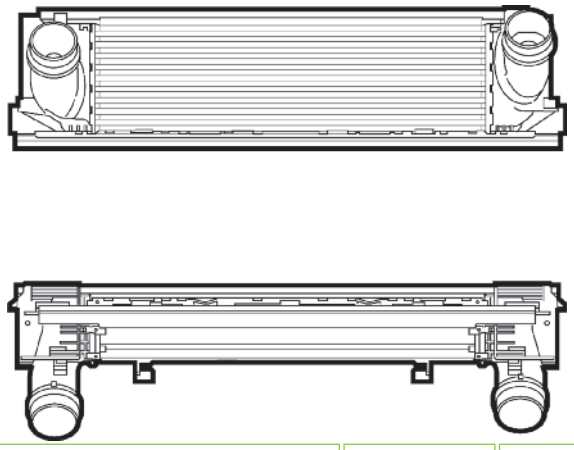

| | | |
|---|---|---|
| BMW 17517600530 | 495x133.3 | |
| | -temp.sensor | |

## 818264 IA1456 ALB

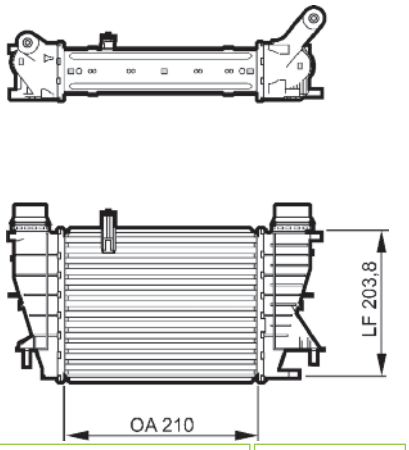


| | | |
|---|---|---|
| NISSAN 14461EM00A | 210x203,8 | |
| | -temp.sensor | |

## 818260 ALB

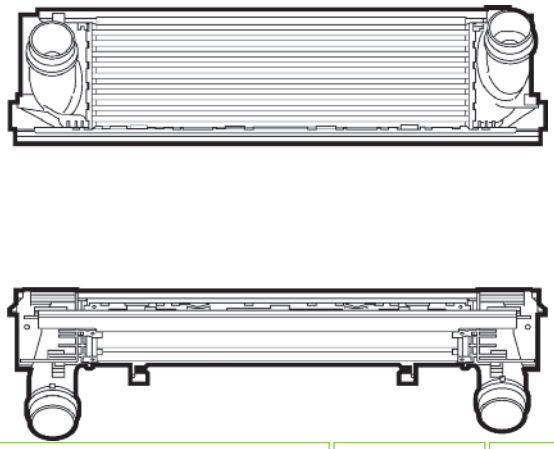

| | | |
|---|---|---|
| BMW 17517600531 | 495x133.3 | |
| | -temp.sensor | |

## 818272

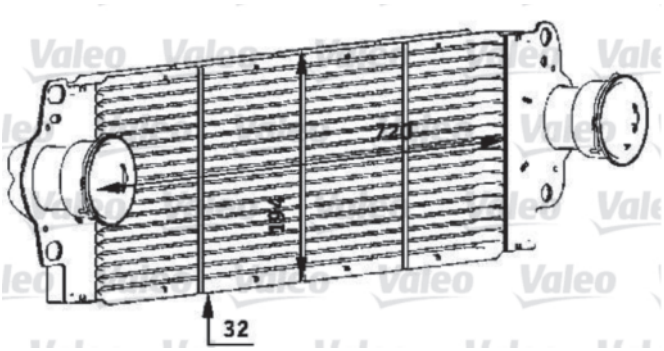


| | | |
|---|---|---|
| VOLKSWAGEN 7H0145804B | | |
| | -temp.sensor | |

## 818263 ALB

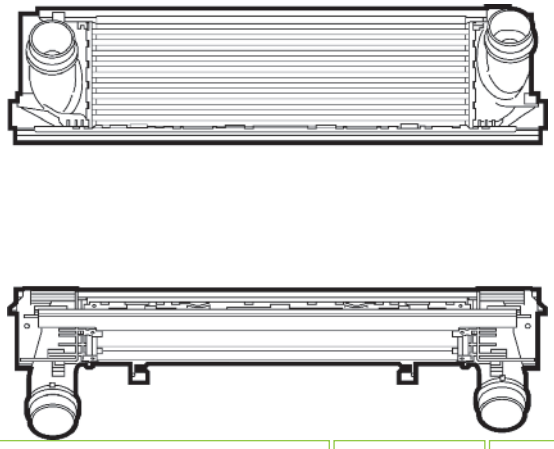

| | | |
|---|---|---|
| BMW 17517618809 | 495x133.3 | |
| | -temp.sensor | |

## 818273

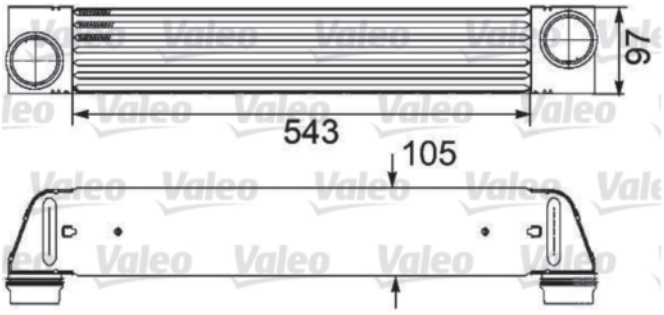


| | | |
|---|---|---|
| BMW 17517795823 | | |
| | -temp.sensor | |

## 818276

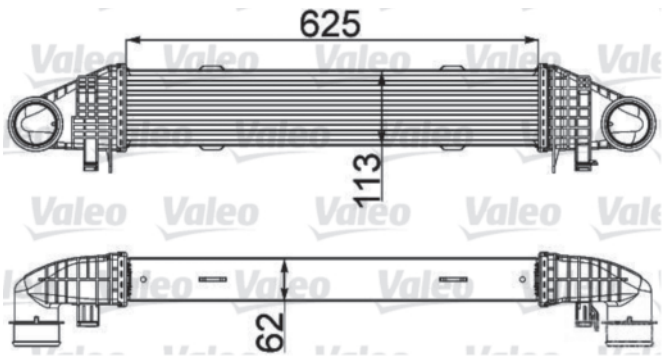


| | | |
|---|---|---|
| MERCEDES 2045000500 | | |
| | -temp.sensor | |

## 818712 ALB

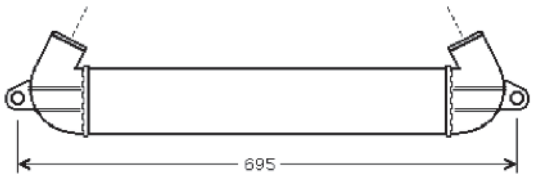


| | | |
|---|---|---|
| FIAT 51718953 | 500x70x85 | 50mm L |
| | -temp.sensor | 50mm L |

## 818701 IA1010 ALB

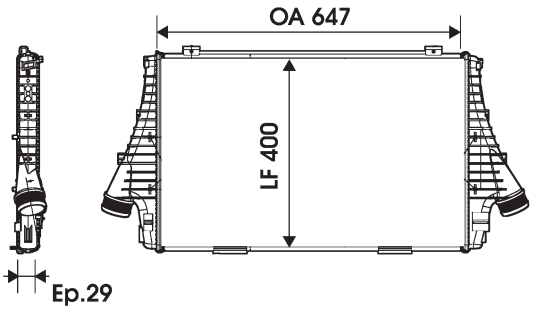


| | | |
|---|---|---|
| OPEL 6302048<br>VAUXHALL 13108570 | 647x400x29 | 57mm L |
| | -temp.sensor | 57mm L |

## 818713 ALB

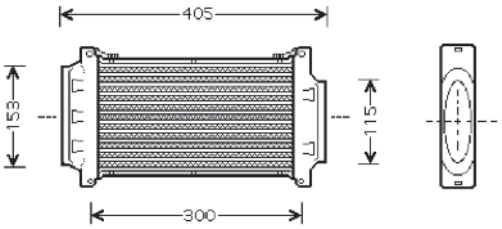


| | | |
|---|---|---|
| MINI 11651515368 | 277x158x50 | 38.5mm B |
| | -temp.sensor | 38.5mm B |

## 818711 ALB

Picture not available
Image non disponible
Imagen no disponible
Immagine non disponibile
Nicht verfügbares Bild
Brak zdjęcia
Картина недоступна

| | | |
|---|---|---|
| FIAT 46849068 | 500x85x70 | L |
| | -temp.sensor | L |

## 818714 ALB

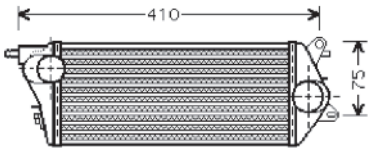


| | | |
|---|---|---|
| MINI 17517788755 | 285x127x40 | 38.5mm L |
| | -temp.sensor | 38.5mm L |

## 818715 ALB

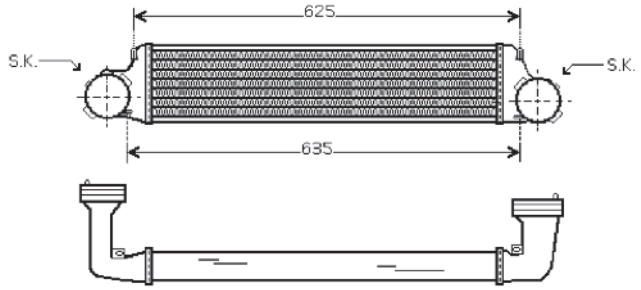


| | | |
|---|---|---|
| BMW 17517793370 | 540x130x50 | 62mm QC |
| | -temp.sensor | 62mm QC |

## 818716 ALB

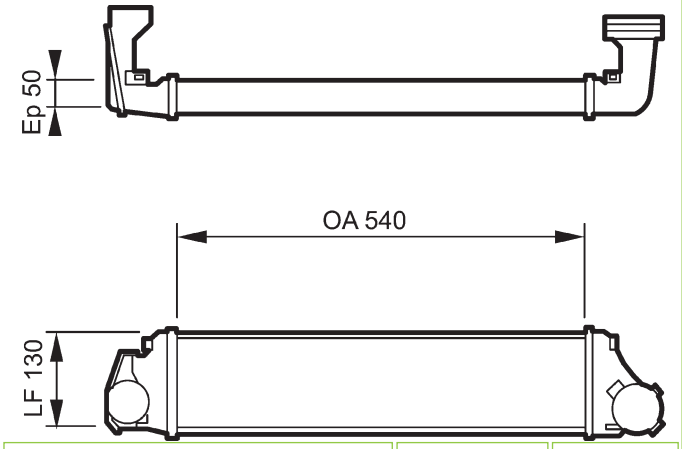


| | | |
|---|---|---|
| BMW 17517786351 | 540x130x50 | 50mm QC |
| | -temp.sensor | 50mm L |

## 818717 ALB

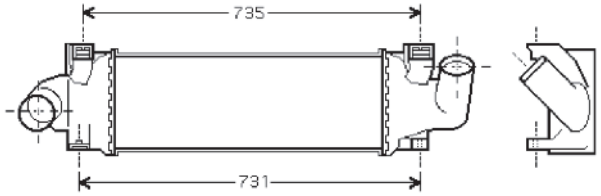


| | | |
|---|---|---|
| FORD 1353523 | 601x143x58 | 50mm L |
| | -temp.sensor | 50mm L |

## 818720 ALB

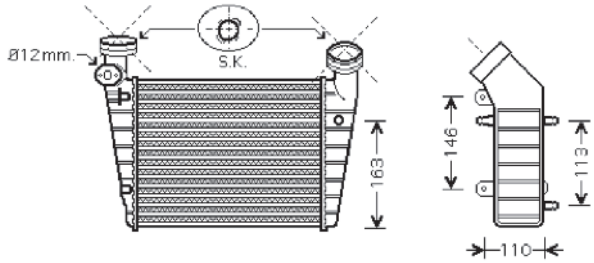


| | | |
|---|---|---|
| SKODA 3B0145805H<br>VOLKSWAGEN 3B0145805H | 230x207x62 | 66mm QC |
| | -temp.sensor | 66mm QC |

## 818721 IA1343 ALB

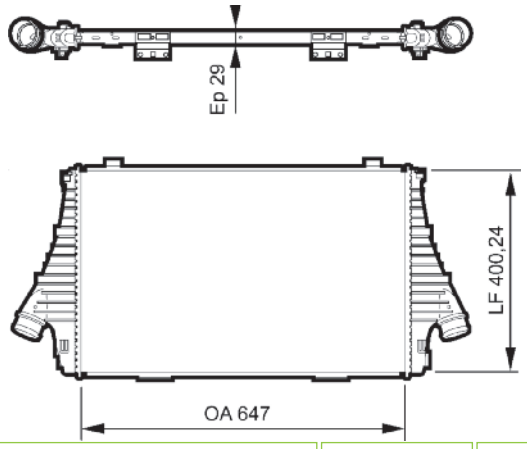


| | | |
|---|---|---|
| FIAT 51749913 | 647x400 | |
| | -temp.sensor | |

## 818722 IM1010 ALM

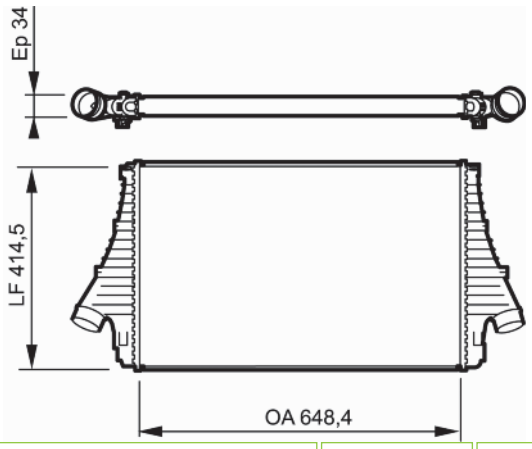


| | | |
|---|---|---|
| FIAT 51770417<br>OPEL 6302065<br>VAUXHALL 13205149 | 648, 4x414,5x34 | 60mm L |
| | -temp.sensor | 60mm L |

## 818724 RA8140060 ALB

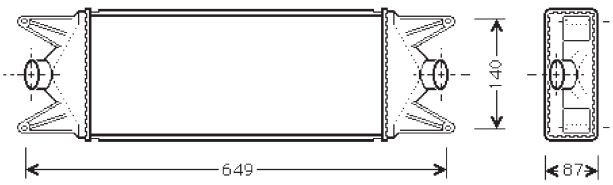


| | | |
|---|---|---|
| IVECO 504084140 | 475x185x63 | |
| | -temp.sensor | |

## 818728 ALB

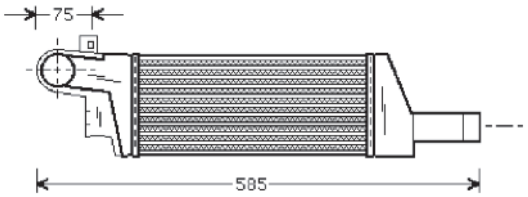


| | | |
|---|---|---|
| OPEL 1302113<br>VAUXHALL 1302113 | 275x127x50 | 44mm L |
| | -temp.sensor | 44mm L |

## 818726 ALB

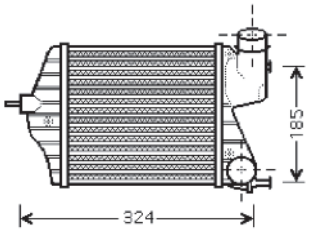


| | | |
|---|---|---|
| FIAT 46831804 | 192x209x65 | 50mm L |
| | -temp.sensor | 50mm L |

## 818730 ALB

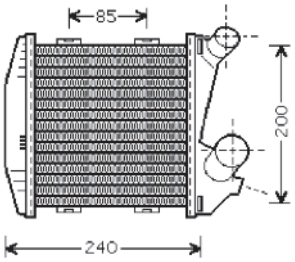


| | | |
|---|---|---|
| MCC 0002490V007000000 | 170x218x50 | 35mm L |
| | -temp.sensor | 35mm L |

## 818727 ALB

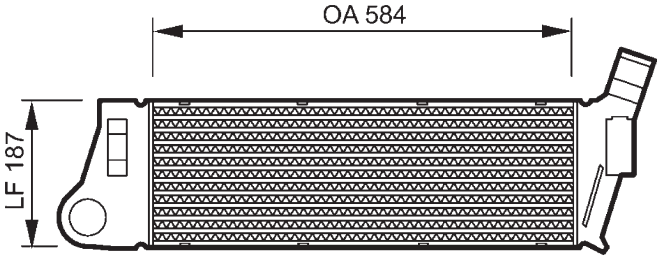


Ep 50

| | | |
|---|---|---|
| RENAULT 8200115540 | 584x187x50 | 50mm L |
| | -temp.sensor | 50mm L |

## 818732 IA1413 ALB

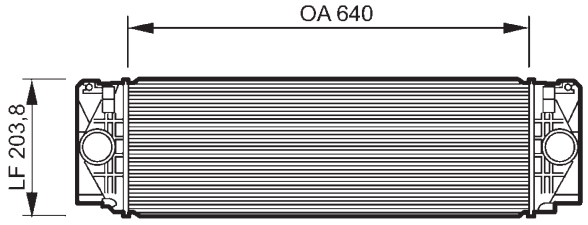


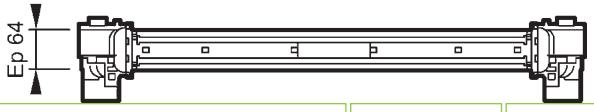


| | | |
|---|---|---|
| VOLKSWAGEN 2E0145804 | 640x203,8x64 | |
| | -temp.sensor | |

## 818757 ALB

Picture not available
Image non disponible
Imagen no disponible
Immagine non disponibile
Nicht verfügbares Bild
Brak zdjęcia
Картина недоступна

| | | |
|---|---|---|
| AUDI 8E0145805S | 215x218x62 | 56mm L |
| | -temp.sensor | 56mm L |

## 818772 IA1330 ALB

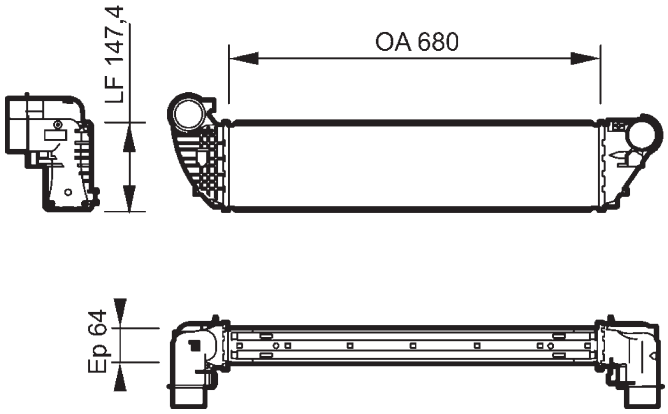


| | | |
|---|---|---|
| RENAULT 8200301884 | 680x147,4x64 | 59mm L |
| | -temp.sensor | 59mm L |

## 818769 IA1430

Picture not available
Image non disponible
Imagen no disponible
Immagine non disponibile
Nicht verfügbares Bild
Brak zdjęcia
Картина недоступна

| | | |
|---|---|---|
| CITROEN 0384K0<br>PEUGEOT 0384K0 | | |
| | -temp.sensor | |

## 818794 ALB

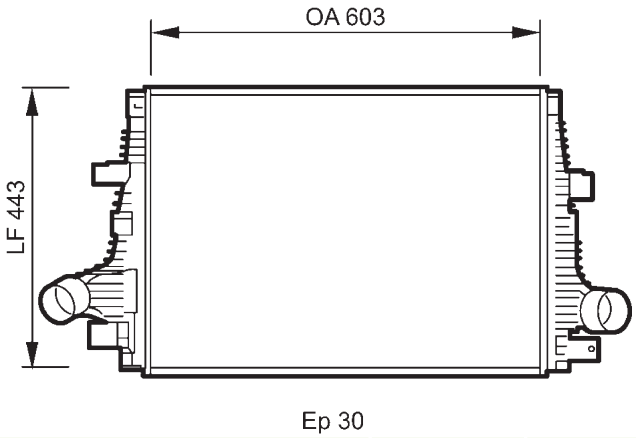


| | | |
|---|---|---|
| ALFA ROMEO 60692222 | 603x443x30 | 60mm L |
| | -temp.sensor | 60mm L |

## 818771 IA1422 ALB

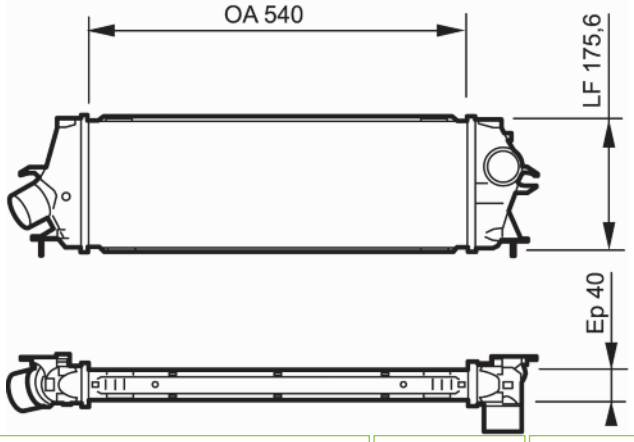


| | | |
|---|---|---|
| OPEL 4416946<br>RENAULT 8200411160<br>VAUXHALL 93854162 | 540x175,6x40 | 52mm L |
| | -temp.sensor | 52mm L |

## 818795 ALB

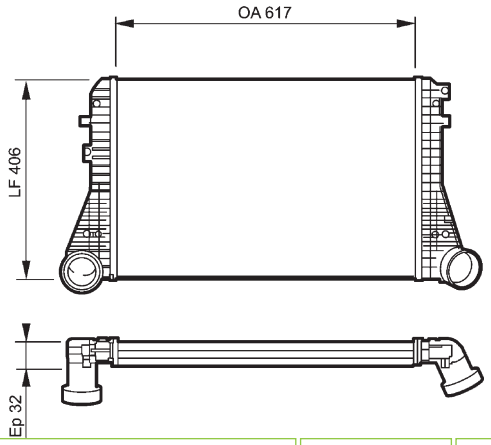


| | | |
|---|---|---|
| AUDI 1K0145803E<br>SEAT 1K0145803A<br>SKODA 1K0145803S<br>VOLKSWAGEN 1K0145803S | 617x406x32 | 70mm QC |
| | -temp.sensor | 70mm QC |

## 818796 ALB

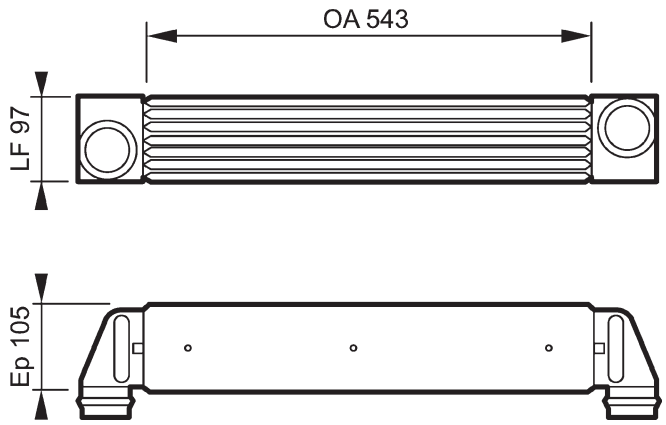


| | | |
|---|---|---|
| BMW 17517787446 | 543x97x105 | 60mm QC |
| | -temp.sensor | 60mm QC |

## 818802 ALB

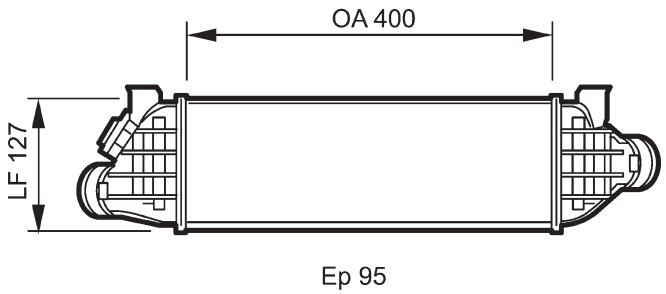


| | | |
|---|---|---|
| FORD 4522846 | 400x127x95 | |
| | -temp.sensor | |

## 818797 ALB

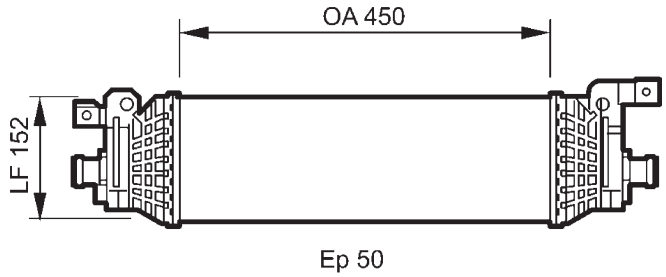


| | | |
|---|---|---|
| FORD 1337624 | 450x152x50 | 40mm L |
| | -temp.sensor | 40mm L |

## 818806 ALB

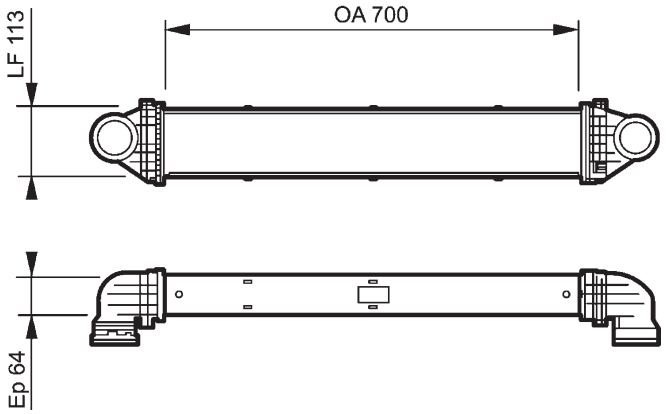


| | | |
|---|---|---|
| MERCEDES 1695000000 | 700x96x64 | 66mm QC |
| | -temp.sensor | 66mm QC |

## 818800 ALB

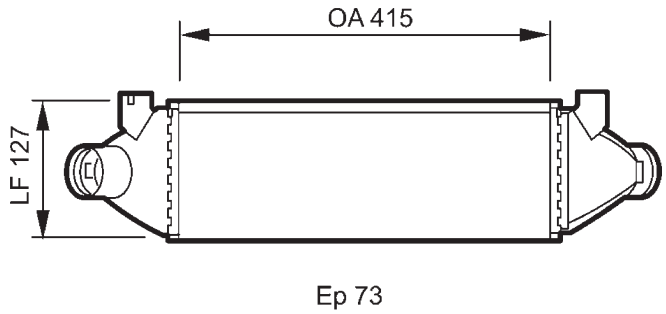


| | | |
|---|---|---|
| FORD 4522532<br>FORD 4522532 | 415x127x73 | 55mm L |
| | -temp.sensor | 55mm L |

## 818807 ALB

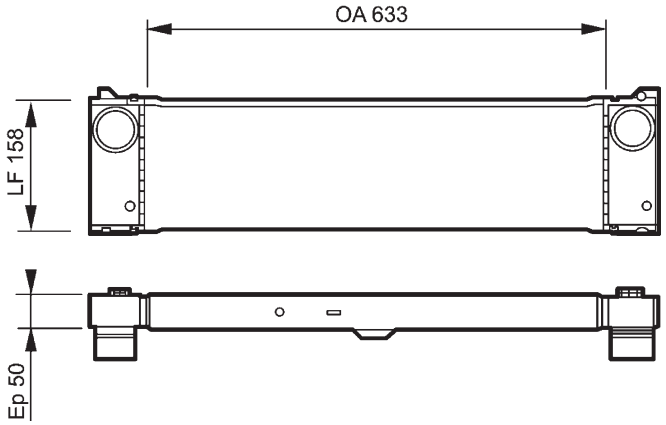


| | | |
|---|---|---|
| MERCEDES 6395010301 | 633x158x50 | 55mm L |
| | -temp.sensor | 55mm L |

## 818808 ALB

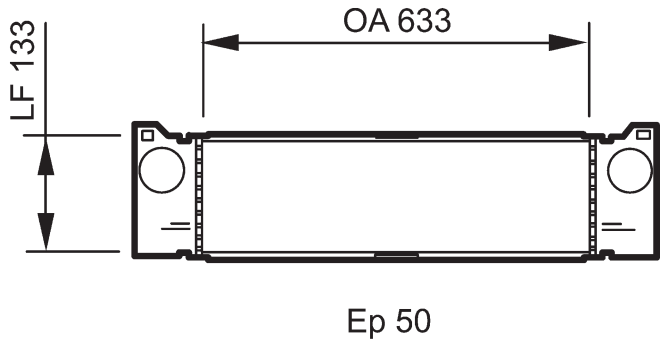


| | | |
|---|---|---|
| MERCEDES 6395010201 | 633x133x50 | 55mm L |
| | -temp.sensor | 55mm L |

## 818815 ALB

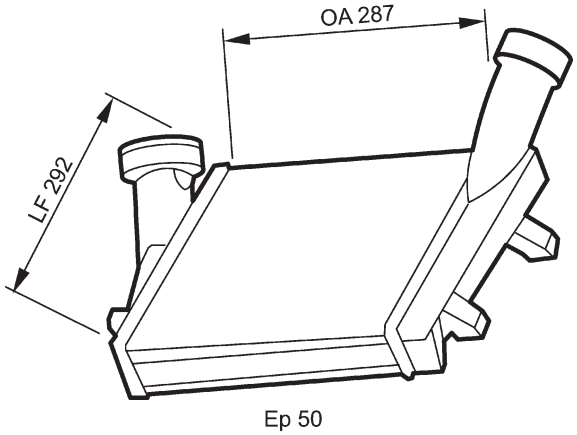


| | | |
|---|---|---|
| PORSCHE 95511080400<br>VOLKSWAGEN 7L0145804A | 287x292x50 | B |
| | -temp.sensor | QC |

## 818809 ALB

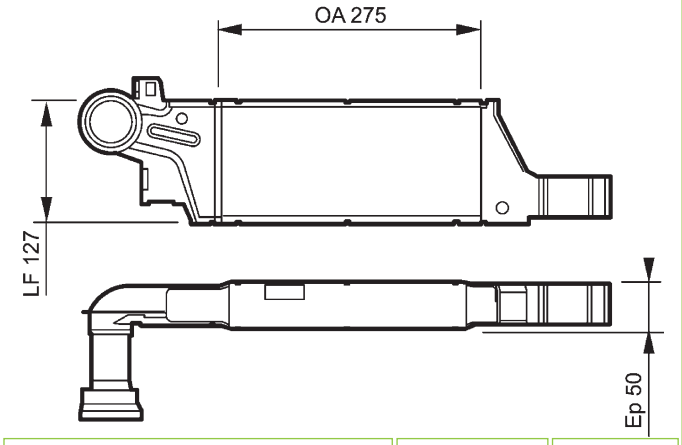


| | | |
|---|---|---|
| OPEL 1300410<br>VAUXHALL 93177425 | 275x127x50 | 44mm QC |
| | -temp.sensor | 44mm L |

## 818818 IM1128 ALM

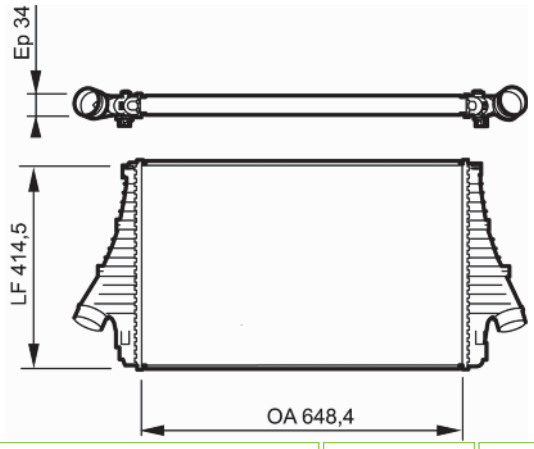


| | | |
|---|---|---|
| SAAB 12765753 | 648x414,5x34 | 60mm L |
| | -temp.sensor | 60mm L |

## 818814 ALB

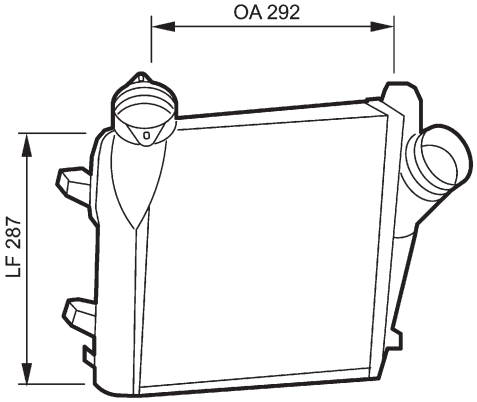


| | | |
|---|---|---|
| PORSCHE 95511080300<br>VOLKSWAGEN 7L0145803A | 292x287x50 | B |
| | -temp.sensor | QC |

## 818820 RT4346 ALB

Picture not available
Image non disponible
Imagen no disponible
Immagine non disponibile
Nicht verfügbares Bild
Brak zdjęcia
Картина недоступна

| | | |
|---|---|---|
| RENAULT 8200221885 | 530x100x42 | |
| | -temp.sensor | |

## 818822 ALB

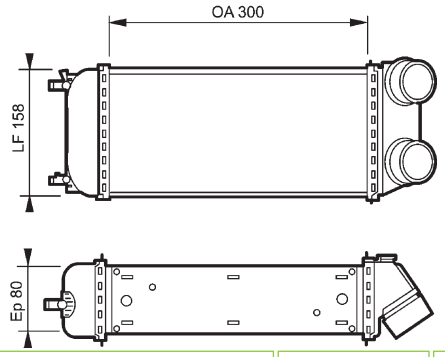


| | | |
|---|---|---|
| PEUGEOT 0384H1 | 300x158x80 | |
| | -temp.sensor | |

## 818825 ALB

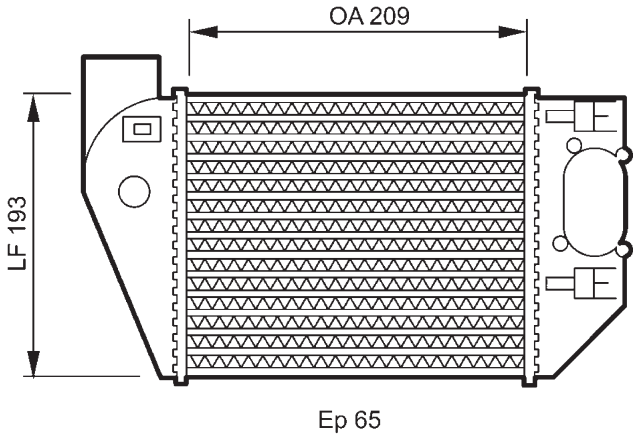


| | | |
|---|---|---|
| AUDI 8E0145806F | 209x193x65 | 53mm B |
| | -temp.sensor | 53mm L |

## 818823 ALB

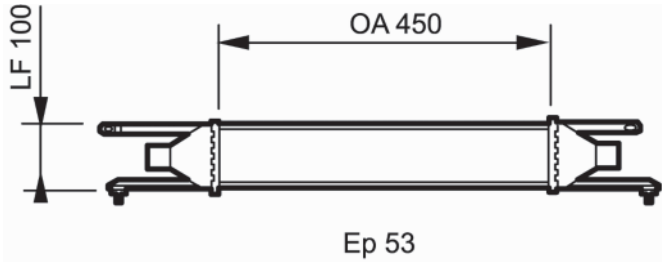


| | | |
|---|---|---|
| FIAT 55702237 | 450x100x53 | 36mm L |
| | -temp.sensor | 36mm L |

## 818826 ALB

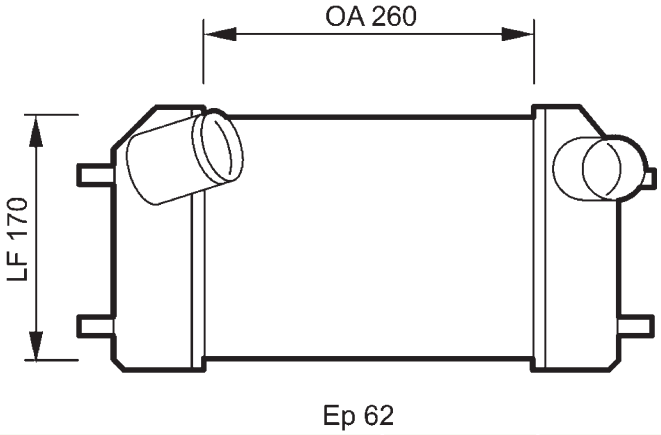


| | | |
|---|---|---|
| LAND ROVER FTP8030 | 260x170x62 | |
| | -temp.sensor | |

## 818824 ALB

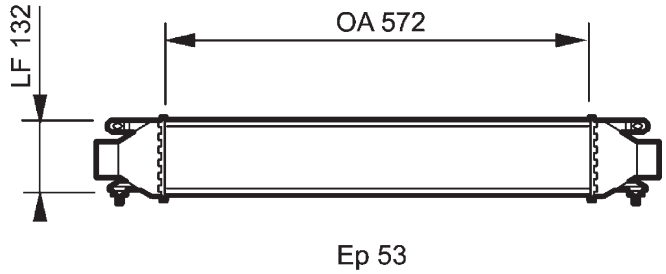


| | | |
|---|---|---|
| FIAT 55700635 | 572x132x53 | 50mm L |
| | -temp.sensor | 50mm L |

## 818827 ALB

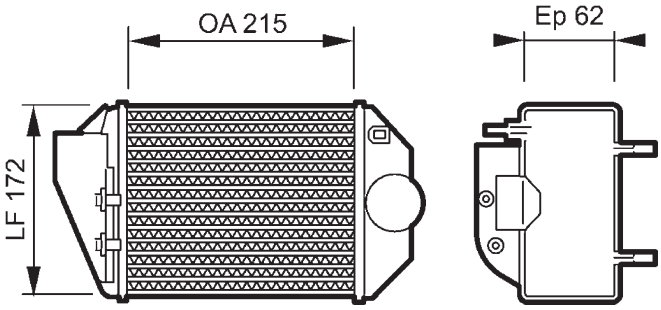


| | | |
|---|---|---|
| AUDI 059145805<br>SKODA 059145805<br>VOLKSWAGEN 059145805 | 215x172x62 | 53mm L |
| | -temp.sensor | 53mm L |

## 818828 ALB

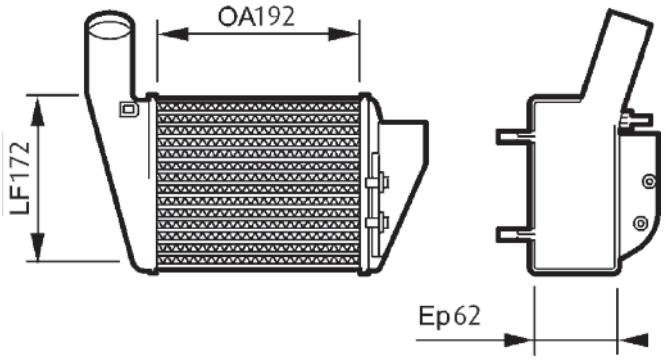


| | | |
|---|---|---|
| AUDI 059145806<br>VOLKSWAGEN 059145806 | 192x172x62 | 53mm L |
| | -temp.sensor | 53mm L |

## 818829 IA1428 ALB

Picture not available
Image non disponible
Imagen no disponible
Immagine non disponibile
Nicht verfügbares Bild
Brak zdjęcia
Картина недоступна

| | | |
|---|---|---|
| SEAT 6Q0145804G<br>SKODA 6Q0145804G | 183x189,7x64 | 50mm L |
| | -temp.sensor | 50mm L |

## 818830 IA1348 ALB

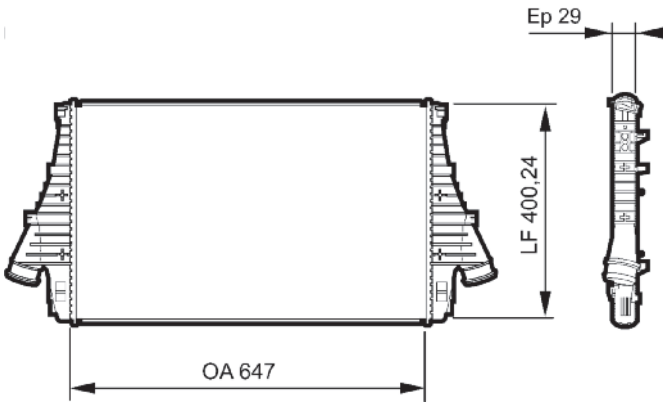


| | | |
|---|---|---|
| FIAT 51782907 | 647x400x29 | 61mm L |
| | -temp.sensor | 61mm L |

## 818835 IA1421 ALB

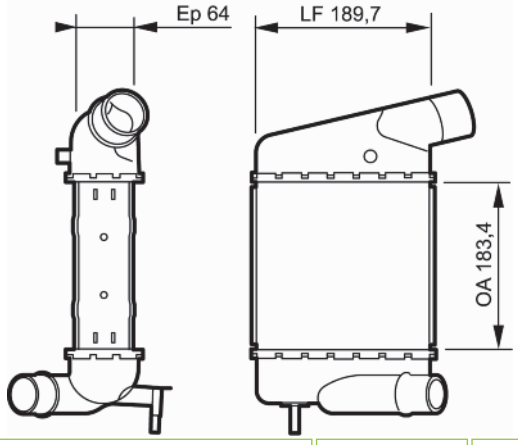


| | | |
|---|---|---|
| RENAULT 8200369311 | 183x189,7x64 | 41mm L |
| | -temp.sensor | 41mm L |

## 818836 IA1434 ALB

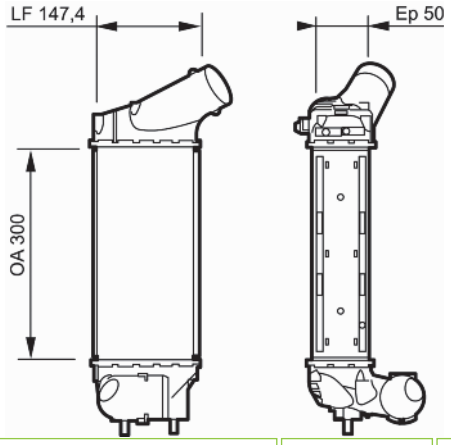


| | | |
|---|---|---|
| PEUGEOT 0384K5 | 300x174,4x80 | 60mm L |
| | -temp.sensor | 60mm L |

## 818837 IA1436 ALB

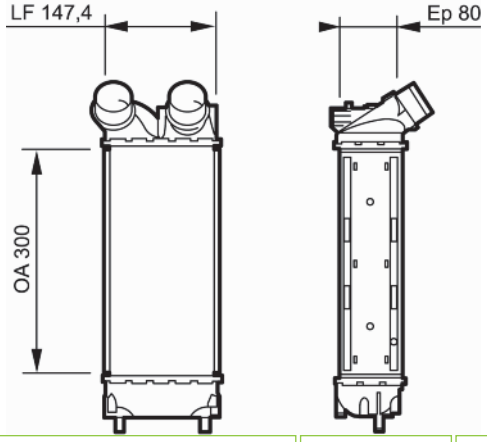


| | | |
|---|---|---|
| CITROEN 0384L4<br>PEUGEOT 0384L4 | 300x147,4x80 | 48mm L |
| | -temp.sensor | 48mm L |

## 818838 IA1350 ALB

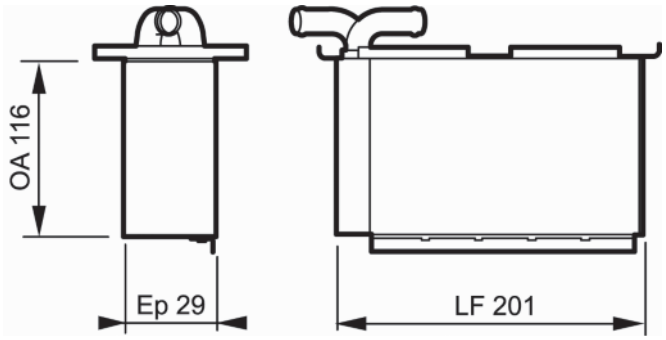


| | | | |
|---|---|---|---|
| AUDI | 03C145749B | 179x116x61 | |
| SEAT | 03C145749B | | |
| SKODA | 03C145749B | | |
| VOLKSWAGEN | 03C145749B | | |
| | | -temp.sensor | |

## 818852 IA1457

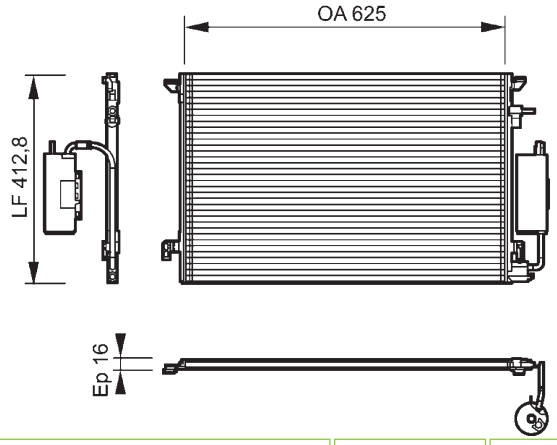


| | | | |
|---|---|---|---|
| NISSAN | 144619U21A | | |
| | | -temp.sensor | |

## 818840 IA1450

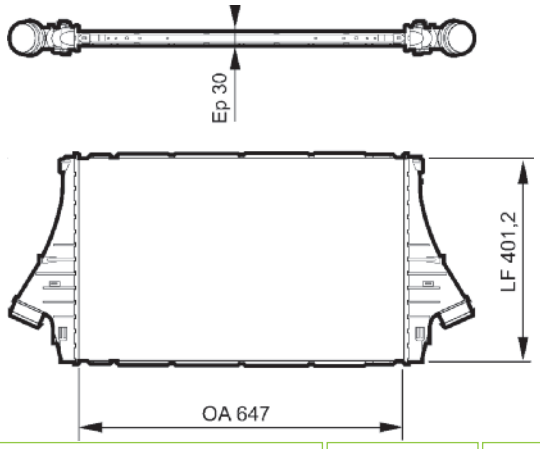


| | | | |
|---|---|---|---|
| SAAB | 12773072 | | |
| | | -temp.sensor | |

## 818853 IA1435 ALB

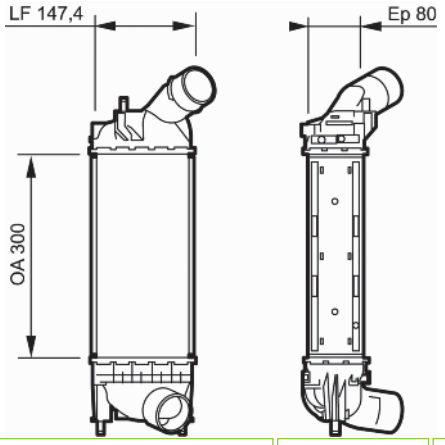


| | | | |
|---|---|---|---|
| CITROEN | 0384K8 | 300x147,4x80 | 60mm L |
| | | -temp.sensor | 60mm L |

## 818841 IA1437 ALB

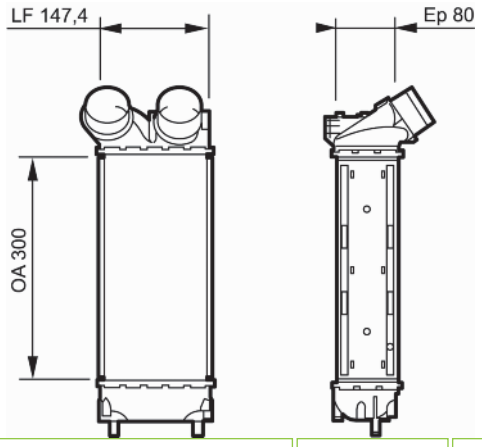


| | | | |
|---|---|---|---|
| PEUGEOT | 1440H9 | 300x147,4x80 | 56mm L |
| | | -temp.sensor | 56mm L |

## 818866 IA1454 ALB

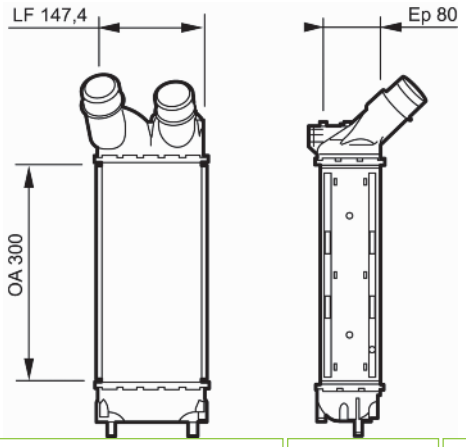


| | | | |
|---|---|---|---|
| CITROEN | 0384L9 | 300x147,4x80 | 48mm L |
| PEUGEOT | 0384L9 | | |
| | | -temp.sensor | 48mm L |

## 818869 IA1453 ALB

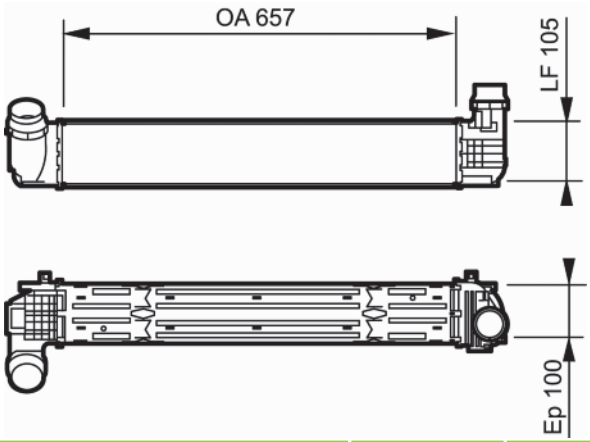


| | | |
|---|---|---|
| RENAULT 144960023R | 655x105x100 | |
| | -temp.sensor | |

## 818888 HS1038

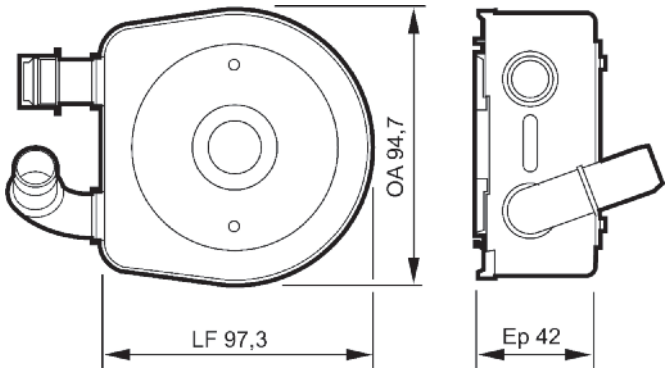


| | | |
|---|---|---|
| CITROEN 227556 | 94,7x97,3 | |
| | | |

## 818870 IA1496 ALB

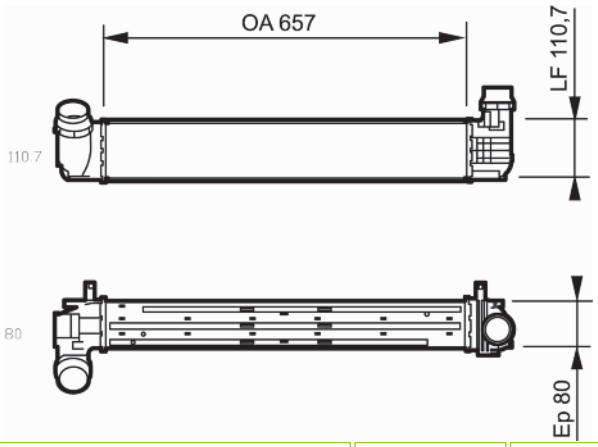


| | | |
|---|---|---|
| RENAULT 144960022R | 657x105,1x80 | 61mm QC |
| | -temp.sensor | 61mm QC |

## 818889 HS1048

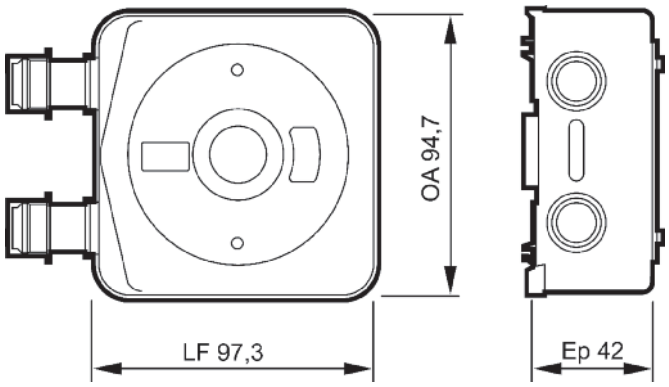


| | | |
|---|---|---|
| CITROEN 227555<br>PEUGEOT 227555 | 94,7x97,3 | |
| | | |

## 818878 IA1452 ALB

Picture not available
Image non disponible
Imagen no disponible
Immagine non disponibile
Nicht verfügbares Bild
Brak zdjęcia
Картина недоступна

| | | |
|---|---|---|
| RENAULT 144960006R | 657x91x80 | 56mm QC |
| | -temp.sensor | 56mm QC |

## 818890 HS1050

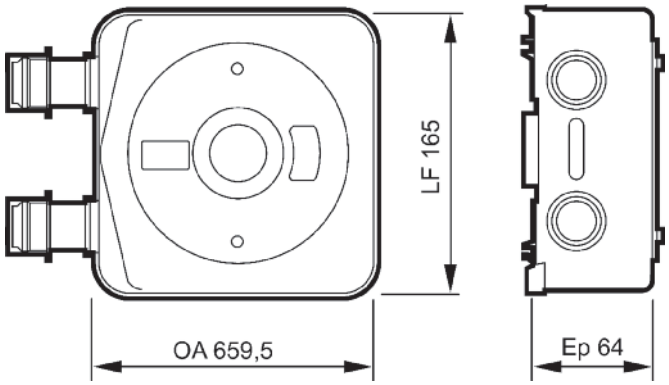


| | | |
|---|---|---|
| CITROEN 227554<br>PEUGEOT 227554 | 94,7x94,7 | |
| | | |

## 818891

Picture not available
Image non disponible
Imagen no disponible
Immagine non disponibile
Nicht verfügbares Bild
Brak zdjęcia
Картина недоступна

| | | | |
|---|---|---|---|
| CITROEN | 0384H0 | | |

## 818892

Picture not available
Image non disponible
Imagen no disponible
Immagine non disponibile
Nicht verfügbares Bild
Brak zdjęcia
Картина недоступна

| | | | |
|---|---|---|---|
| CITROEN | 0384H4 | | |
| PEUGEOT | 0384H4 | | |

## 818895 IA1429 ALB

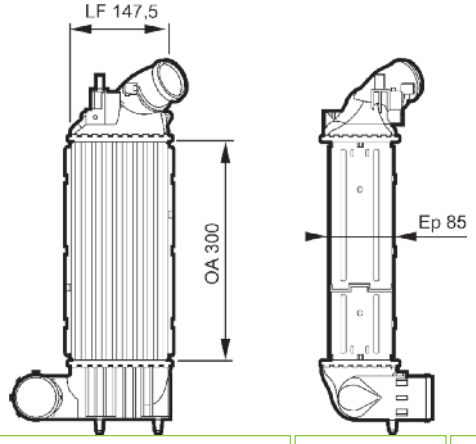


| | | | |
|---|---|---|---|
| PEUGEOT | 0384J8 | 300x147,5x85 | 57mm L |
| | | -temp.sensor | 57mm L |

## 818898 ALB

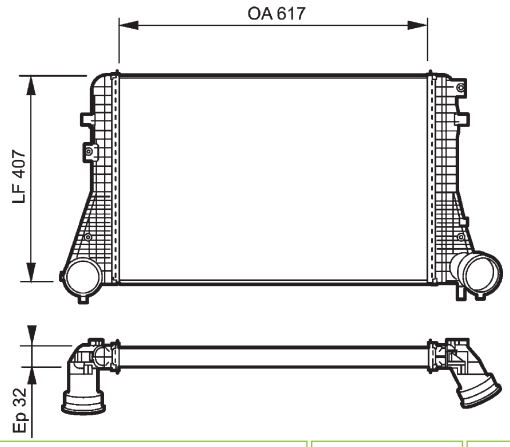


| | | | |
|---|---|---|---|
| SKODA | 1K0145803T | 617x407x32 | QC |
| VOLKSWAGEN | 1K0145803T | | |
| | | -temp.sensor | QC |

## 818899 ALB

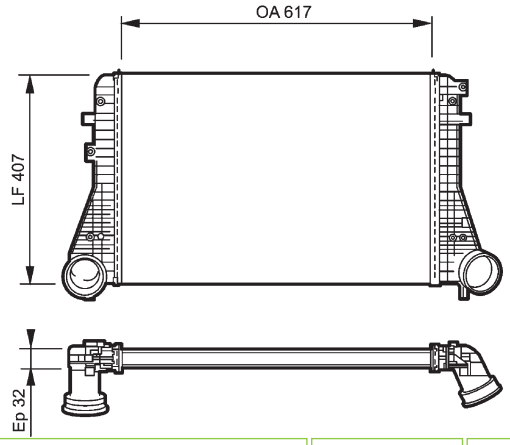


| | | | |
|---|---|---|---|
| SKODA | 1K0145803G | 617x407x32 | |
| VOLKSWAGEN | 3C0145805P | | |
| | | -temp.sensor | |

## 818984 ALM

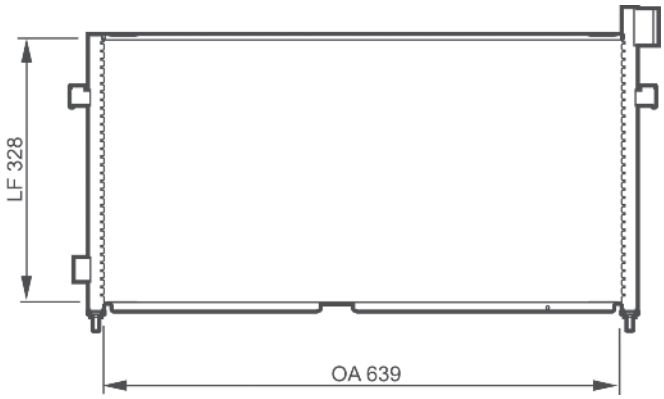


| | | | |
|---|---|---|---|
| VOLVO TRUCKS | 3981637 | 639x328 | |

## 818985 ALM

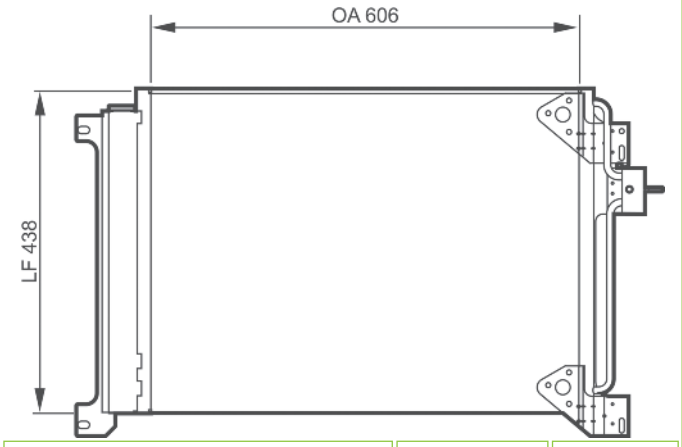


| | | |
|---|---|---|
| IVECO TRUCKS 41214450 | 606x438 | |

## 818988 ALM

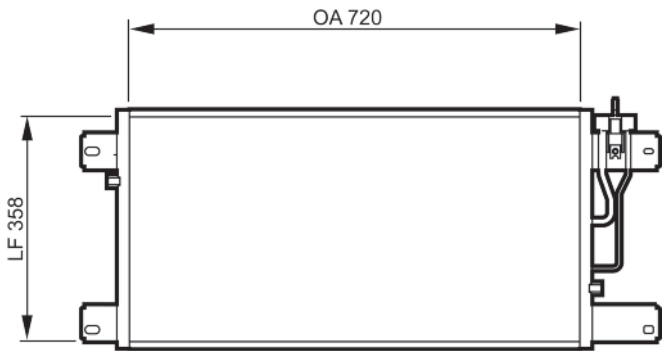


| | | |
|---|---|---|
| SCANIA 1446258 | 720x358 | |

## 818986 ALM

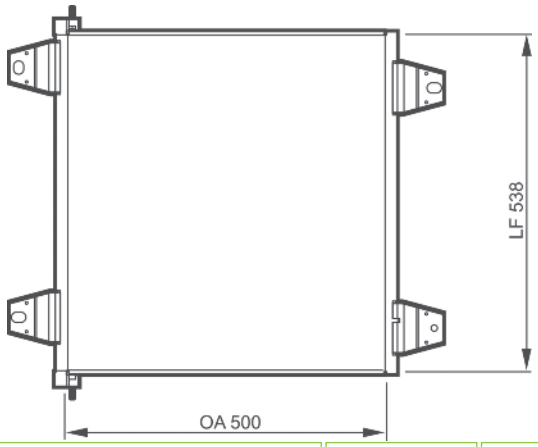


| | | |
|---|---|---|
| DAF 1629115 | 500x538 | |

## 819123 CBS

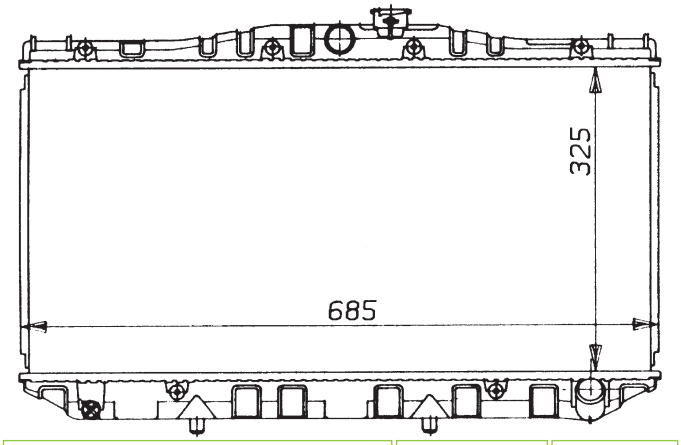


| | | |
|---|---|---|
| TOYOTA 1640063120 | 327x668x16 | 31mm L |
| | | 31mm L |

## 818987 ALM

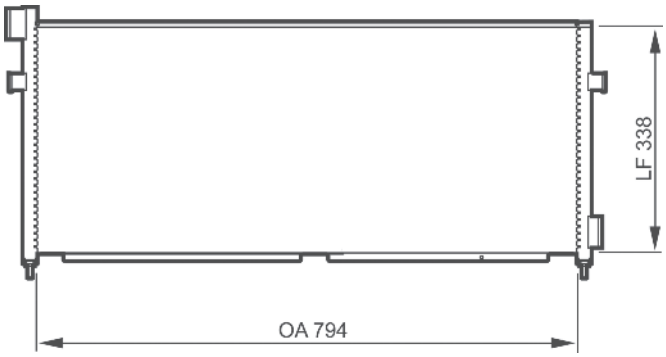


| | | |
|---|---|---|
| VOLVO TRUCKS 3980841 | 794x338 | |

## 819151 CBS

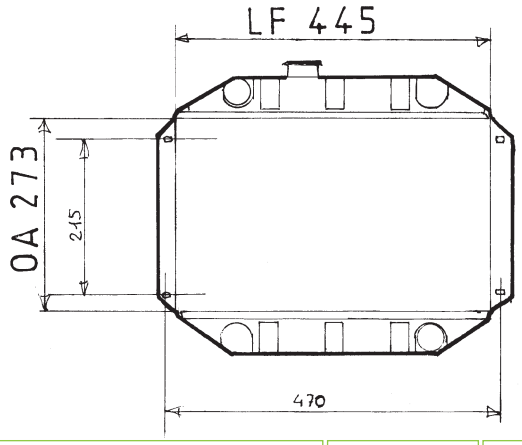


| | | |
|---|---|---|
| FORD 1417980 | 273x445x17 | L |
| | | L |

## 819176 RM1144 ALM

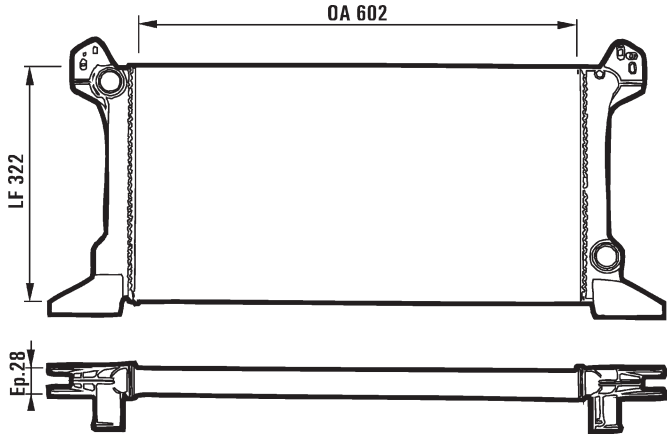


| | | |
|---|---|---|
| FORD 6160271 | 602x322x28 | 38mm L |
| | - | 38mm L |

## 819219 CBS

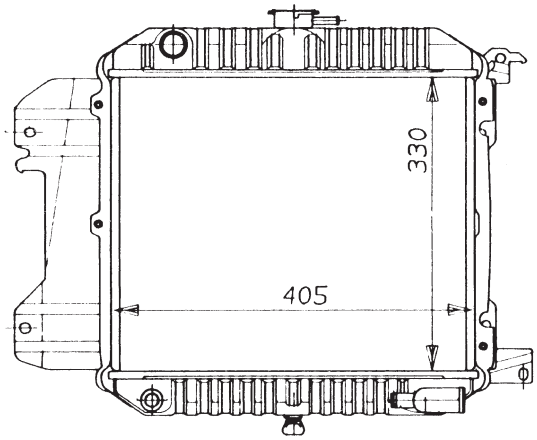


| | | |
|---|---|---|
| NISSAN 2140005A00 | 330x410x33 | 30mm L |
| | - | 30mm L |

## 819193 CBS

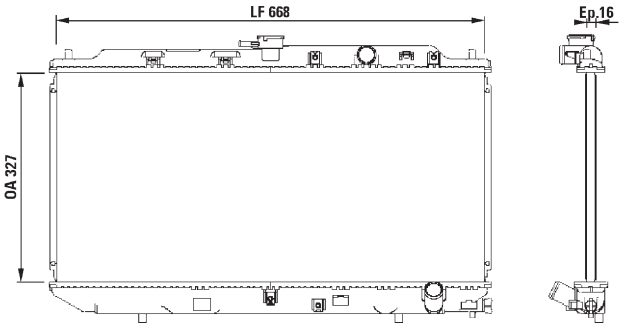


| | | |
|---|---|---|
| HONDA 19010PM4004 | 327x668x16 | 28mm L |
| | - | 28mm L |

## 819240 CBS

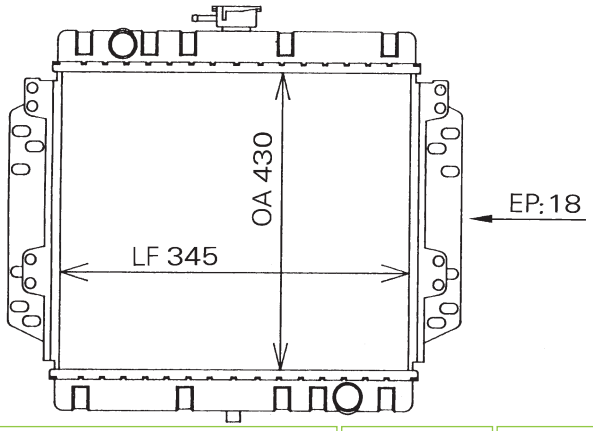


| | | |
|---|---|---|
| FORD 6078971 | 345x430x18 | 32mm L |
| | - | 32mm L |

## 819201 RAB022 ALB

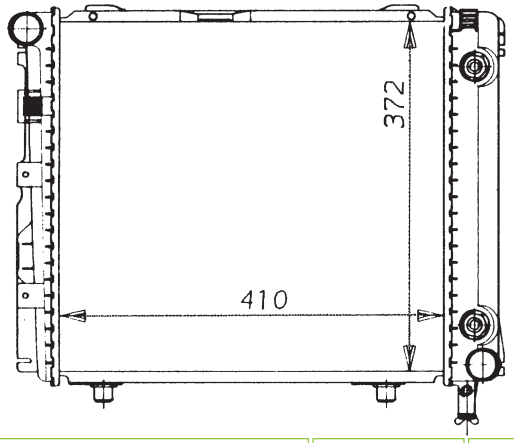


| | | |
|---|---|---|
| MERCEDES 2015002903 | 410x366x42 | 35mm L |
| | + | 35mm L |

## 819259 RM1154 ALM

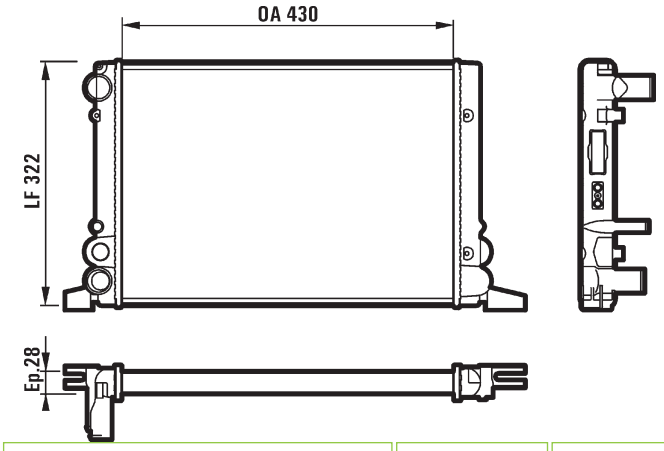


| | | |
|---|---|---|
| AUDI 811121253F | 430x322x28 | 32mm L |
| | - | 32mm L |

## 819260 RC1099 CBS

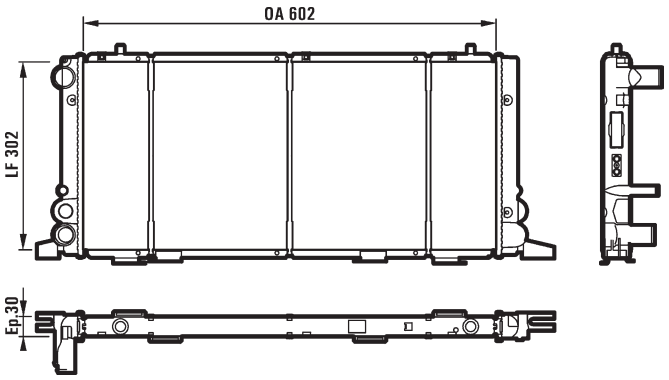


| | | |
|---|---|---|
| AUDI 893121251 | 602x302x30 | 32mm L |
| - | | 32mm L |

## 819376 ALB

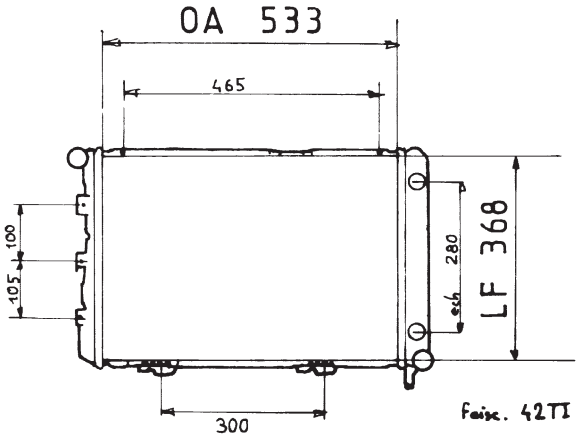


| | | |
|---|---|---|
| MERCEDES 1245002403 | 533x368x42 | 35mm L |
| + | | 35mm L |

## 819320 CBS

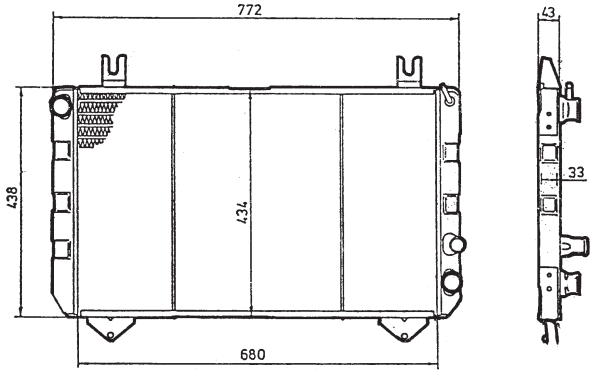


| | | |
|---|---|---|
| FORD 6065788 | 680x420x33 | 40mm L |
| - | | 40mm L |

## 819377 CBS

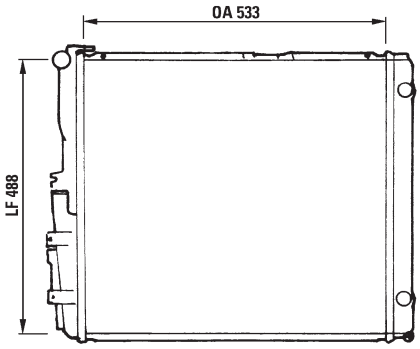


| | | |
|---|---|---|
| MERCEDES 1245009003 | 533x487x35 | 36mm L |
| + | | 36mm L |

## 819368 RA313 ALB

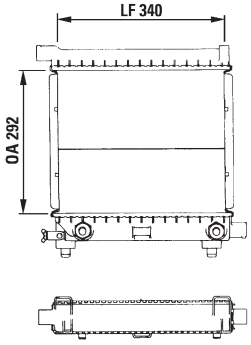


| | | |
|---|---|---|
| MERCEDES 2015004603 | 292x340x42 | 31mm L |
| + | | 31mm L |

## 819378 CBS

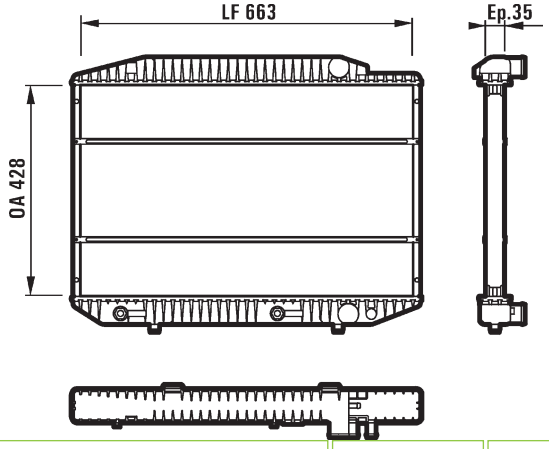


| | | |
|---|---|---|
| MERCEDES 1265013303 | 428x663x35 | 35mm L |
| + | | 35mm L |

## 819379 CBS

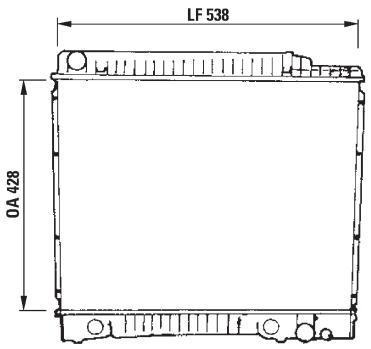


| | | |
|---|---|---|
| MERCEDES 1265003503 | 428x538x38 | 36mm L |
| | + | 36mm L |

## 819388 ALB

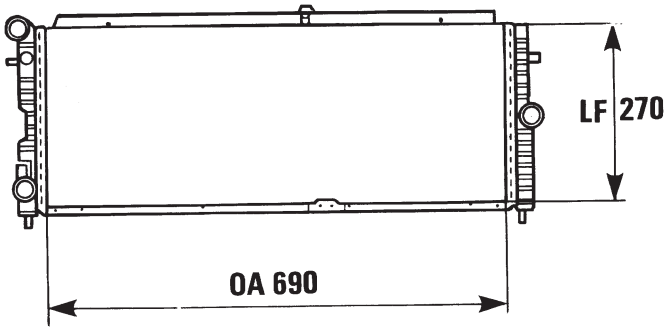


| | | |
|---|---|---|
| OPEL 1300051<br>VAUXHALL 90298560 | 690x268x42 | L |
| | - | L |

## 819383 CBS

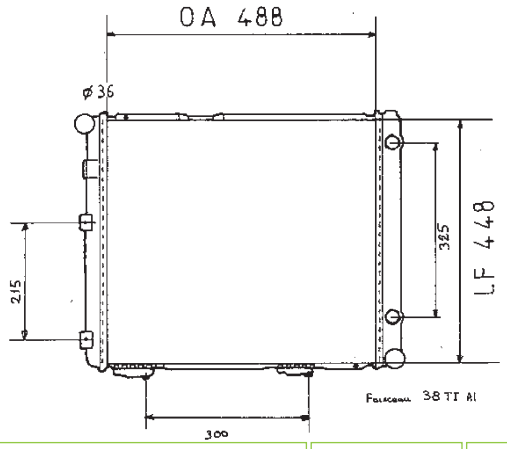


| | | |
|---|---|---|
| MERCEDES 2015005303 | 488x449x34 | 35mm L |
| | + | 35mm L |

## 819389 ALB

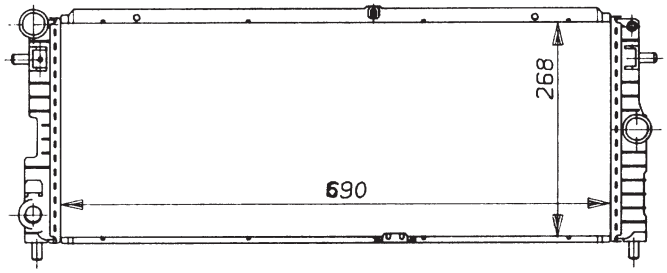


| | | |
|---|---|---|
| OPEL 1300081 | 690x268x42 | L |
| | - | L |

## 819387 RAB015 ALB

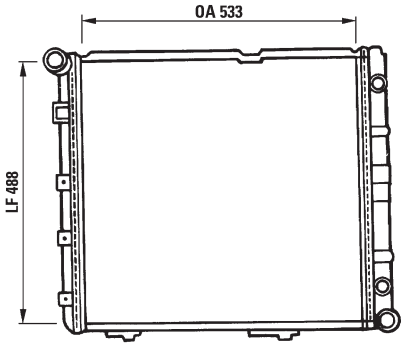


| | | |
|---|---|---|
| MERCEDES 1245009803 | 533x488x42 | 36mm L |
| | + | 36mm L |

## 819395 ALB

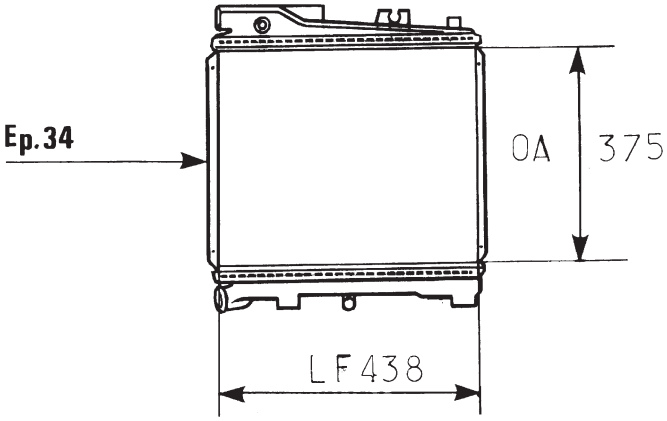


| | | |
|---|---|---|
| BMW 17111707563 | 375x438x34 | L |
| | - | L |

## 819397 ALB

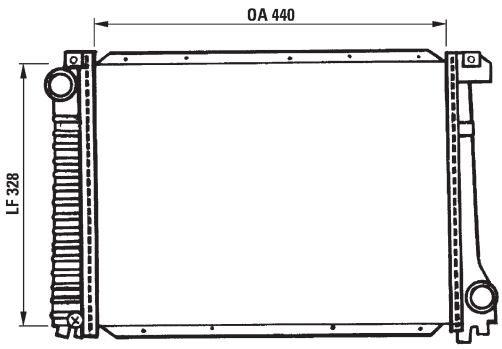


| | | |
|---|---|---|
| BMW 17111712823 | 440x328x34 | 40mm L |
| - | | 40mm L |

## 819414 ALB

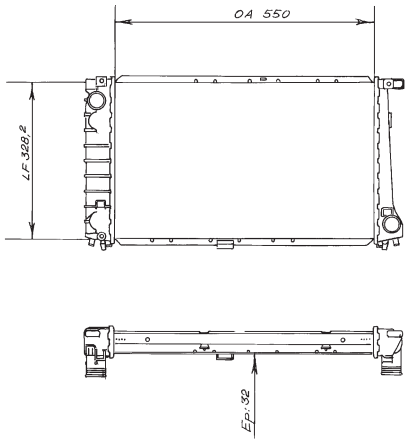


| | | |
|---|---|---|
| BMW 17111178215 | 551x326x34 | 40mm L |
| - | | 40mm L |

## 819412 RAB020 ALB

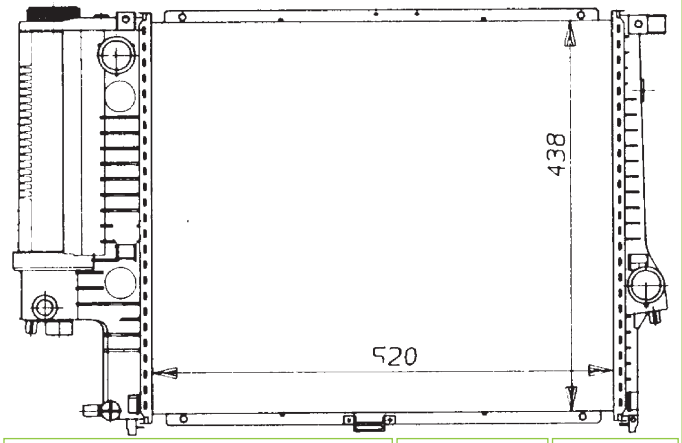


| | | |
|---|---|---|
| BMW 17111737760 | 520x438x41 | 41mm L |
| - | | 41mm |

## 819418 RAB025 ALB

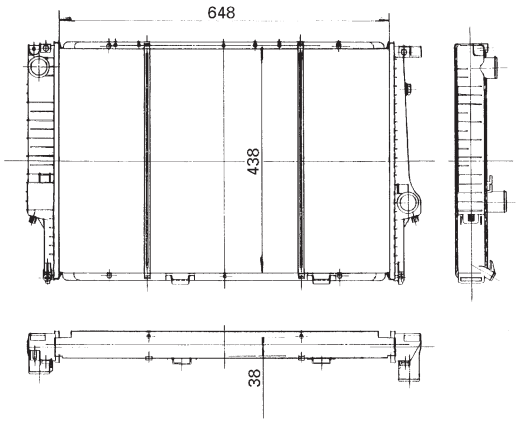


| | | |
|---|---|---|
| BMW 17112242138 | 650x435x42 | 40mm L |
| - | | 40mm L |

## 819413 RAB021 ALB

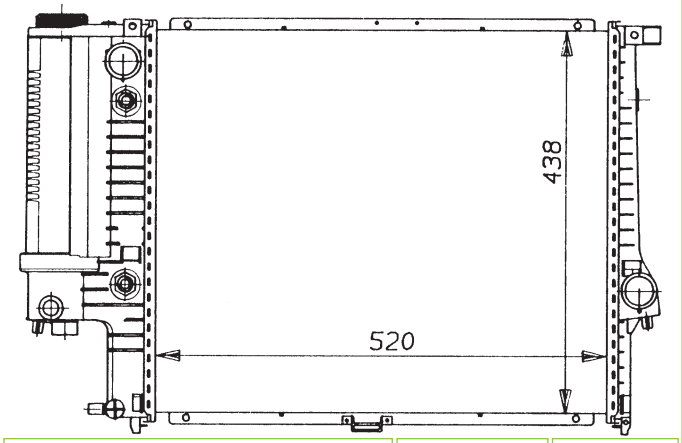


| | | |
|---|---|---|
| BMW 17111719309 | 520x438x34 | 40mm L |
| + | | 40mm L |

## 819428 RM1748 ALM

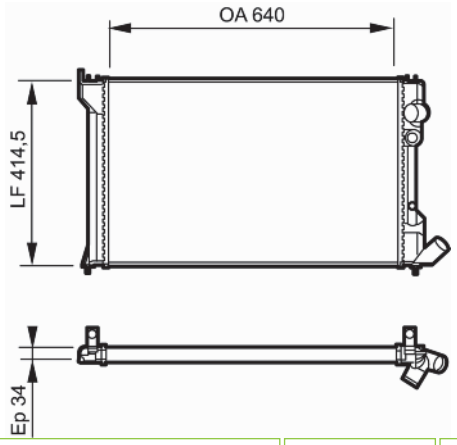


| | | |
|---|---|---|
| CITROEN 96001830<br>PEUGEOT 1301C4 | 640x414,5x34 | 40mm L |
| - | | 40mm L |

## 819431 RA691 ALB

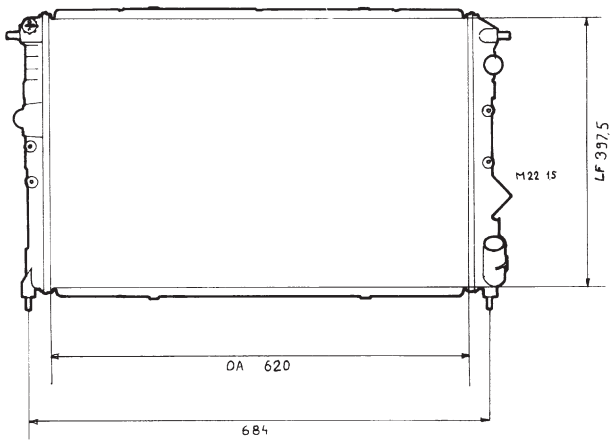


| | | |
|---|---|---|
| RENAULT 6025107990 | 620x398x35 | 32mm L |
| | | 32mm L |

## 883428 TA384 ALM

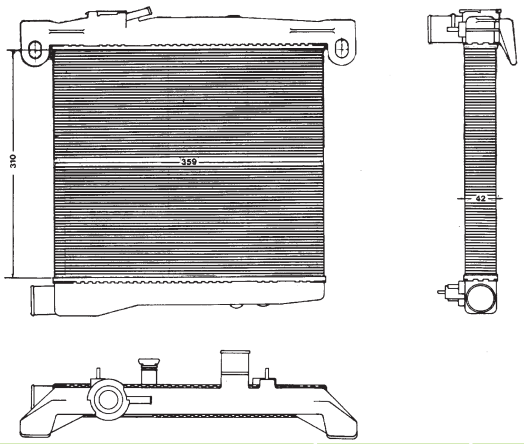


| | | |
|---|---|---|
| FIAT 5882355 | 310x357x34 | 32mm L |
| | | 32mm L |

## 883053 TA439 ALM

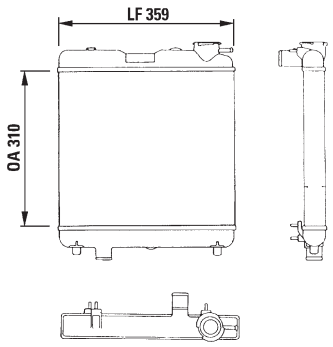


| | | |
|---|---|---|
| FIAT 7585721<br>SEAT SE141117000A | 310x359x42 | 32mm L |
| | | 32mm L |

## 883463 TA058 ALM

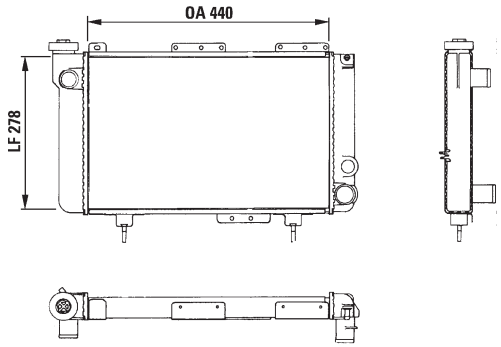


| | | |
|---|---|---|
| RENAULT 7701348798 | 440x278x34 | 32mm L |
| | | 32mm L |

## 883282 TA176 ALM

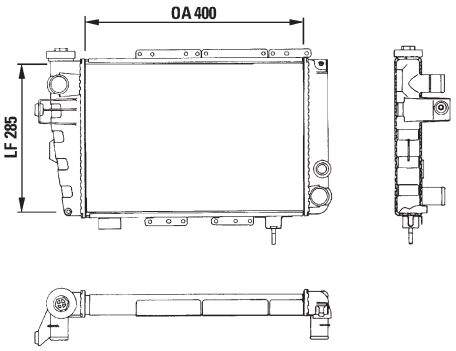


| | | |
|---|---|---|
| RENAULT 7701349387 | 400x285x34 | L |
| | | L |

## 883464 TA371 ALM

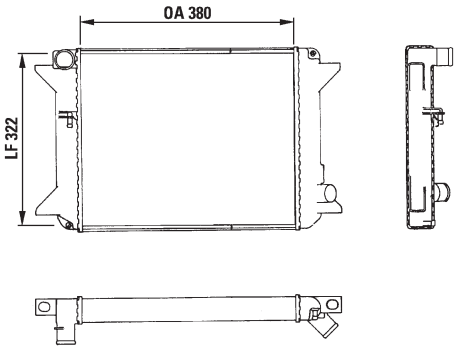


| | | |
|---|---|---|
| CITROEN 95606691 | 380x322x42 | 32mm L |
| | | 32mm L |

## 883715 TA372 ALM

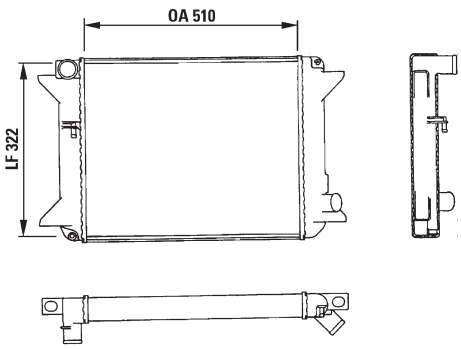


| | | |
|---|---|---|
| CITROEN 95606692 | 510x322x34 | 32mm L |
| | – | 32mm L |

## 883729 TA079 ALM

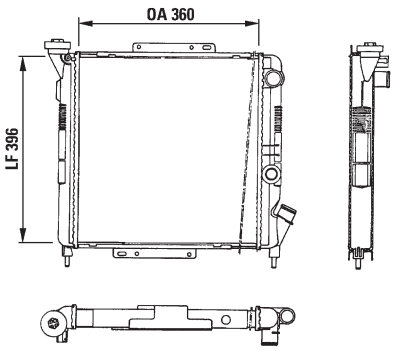


| | | |
|---|---|---|
| RENAULT 7700725010 | 360x396x34 | |
| | – | |

## 883720 TA344 ALM

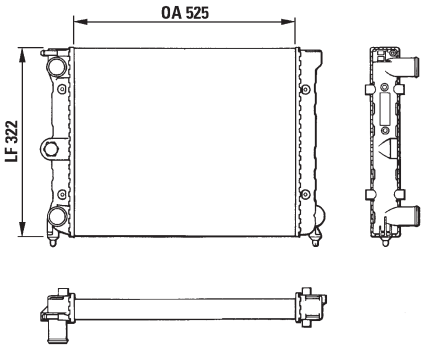


| | | |
|---|---|---|
| VOLKSWAGEN 321121253BM | 525x322x34 | 32mm L |
| | – | 32mm L |

## 883751 TA117 ALM

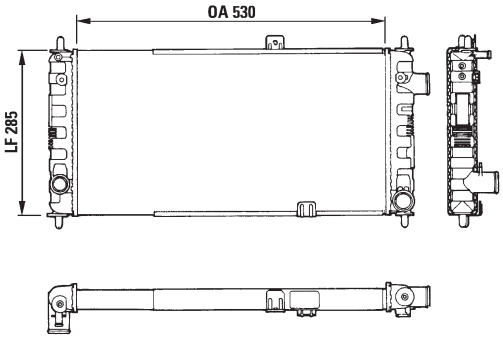


| | | |
|---|---|---|
| OPEL 1302189<br>VAUXHALL 90128036 | 530x285x34 | 34mm L |
| | – | 34mm L |

## 883727 TA343 ALM

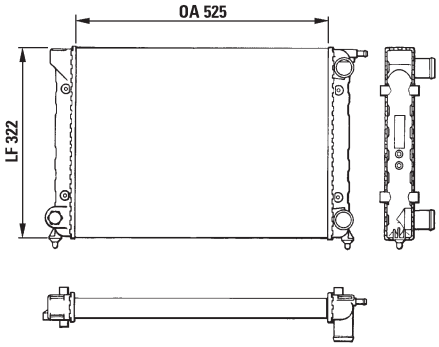


| | | |
|---|---|---|
| SEAT 1L0121253P<br>VOLKSWAGEN 321121253AL | 525x322x34 | 32mm L |
| | – | 32mm L |

## 883764 RM2007 ALM

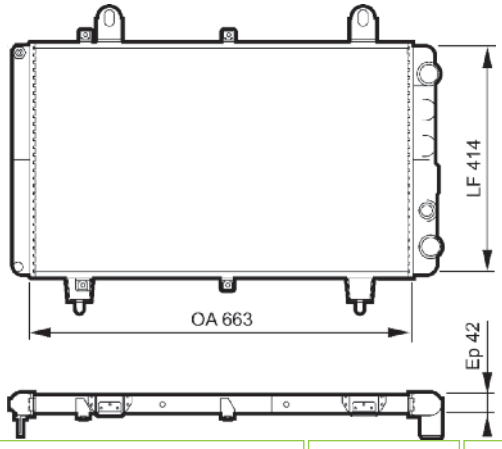


| | | |
|---|---|---|
| CITROEN 130551<br>FIAT 5969174<br>PEUGEOT 130551 | 663x414x42 | 38mm L |
| | – | 38mm L |

## 883765 RM2009 ALM

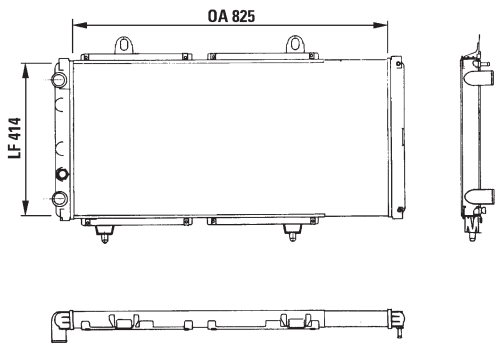


| | | |
|---|---|---|
| ALFA ROMEO 7707251<br>CITROEN ZF05931556<br>FIAT 7707251<br>PEUGEOT 1300F7 | 825x414x42 | 38mm L |
| | | 38mm L |

## 883773 TA153 ALM

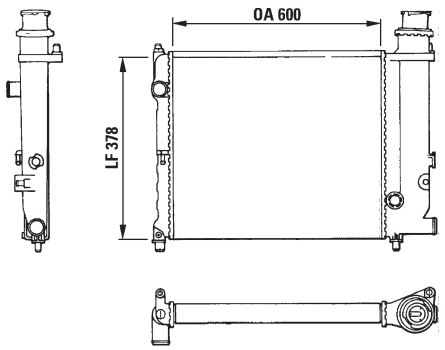


| | | |
|---|---|---|
| CITROEN 95495038 | 600x378x34 | 32mm L |
| | | 32mm L |

## 883767 TA148 ALM

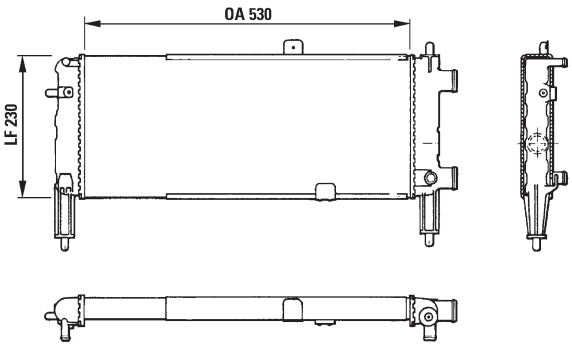


| | | |
|---|---|---|
| OPEL 1302014<br>VAUXHALL 90136828 | 530x299x34 | 34mm L |
| | | 34mm L |

## 883774 TA164 ALM

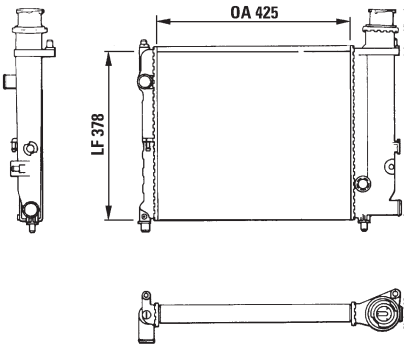


| | | |
|---|---|---|
| CITROEN 95495037 | 425x378x34 | 32mm L |
| | | 32mm L |

## 883771 TA149 ALM

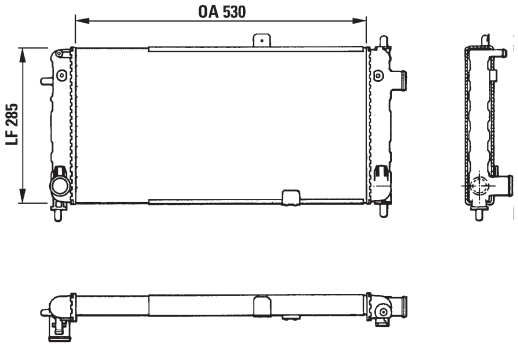


| | | |
|---|---|---|
| OPEL 1302015<br>VAUXHALL 90136753 | 530x285x34 | 34mm L |
| | | 34mm L |

## 883787 ALM

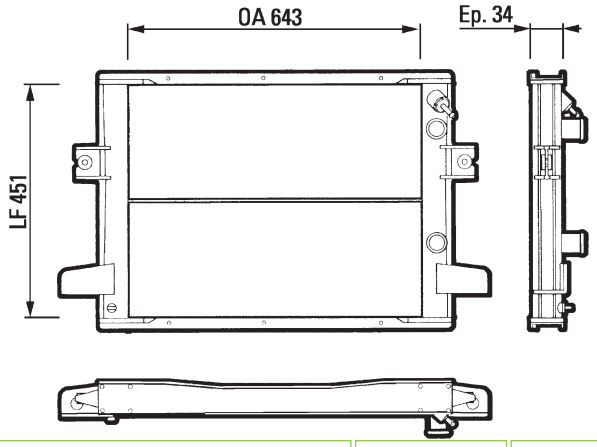


| | | |
|---|---|---|
| ALFA ROMEO 93802646<br>IVECO 93807802 | 643x451x34 | L |
| | | L |

## 883799 TA141 ALM

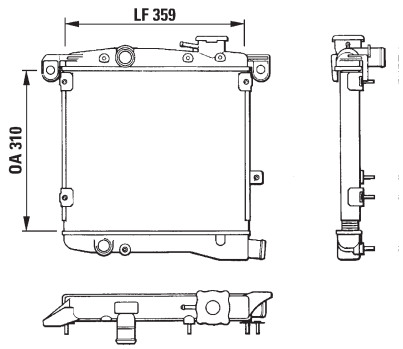


| | | |
|---|---|---|
| AUTOBIANCHI 82397785 | 310x359x34 | 32mm L |
| | | 32mm L |

## 883812 TA387 ALM

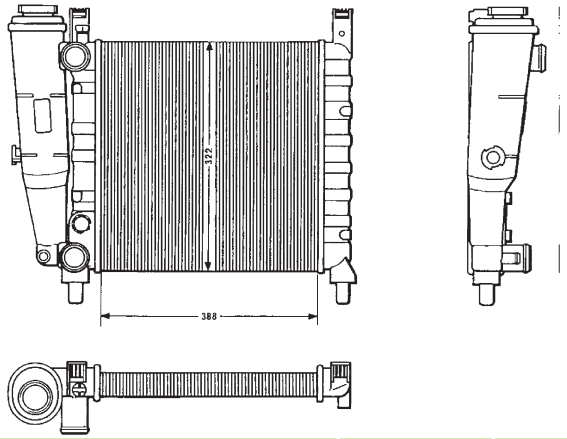


| | | |
|---|---|---|
| FIAT 7739942 | 388x322x34 | 35mm L |
| | | 35mm L |

## 883806 TA431 ALM

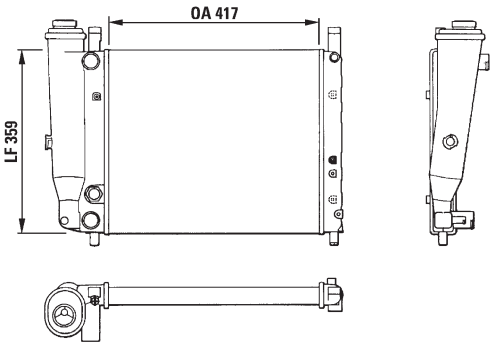


| | | |
|---|---|---|
| FIAT 7566876 | 417x359x34 | 35mm L |
| | | 35mm L |

## 883813 TA388 ALM

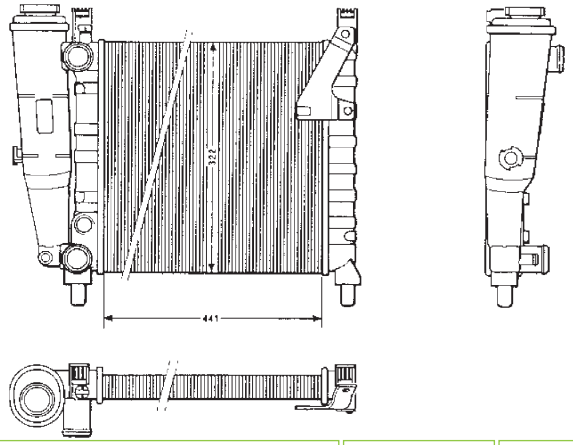


| | | |
|---|---|---|
| FIAT 7739937 | 441x322x34 | 35mm L |
| | | 35mm L |

## 883811 TA386 ALM

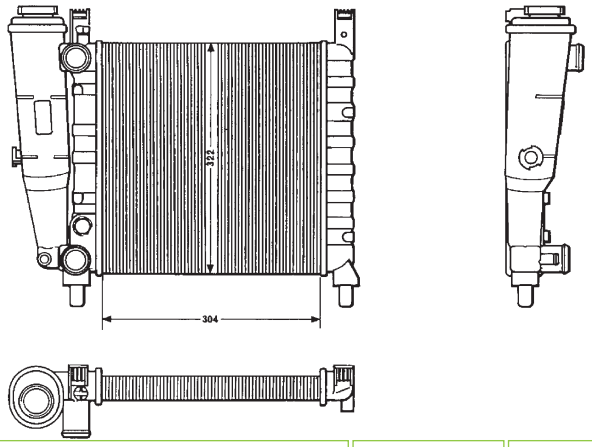


| | | |
|---|---|---|
| FIAT 7739938 | 304x322x34 | 35mm L |
| | | 35mm L |

## 883818 TA340 ALM

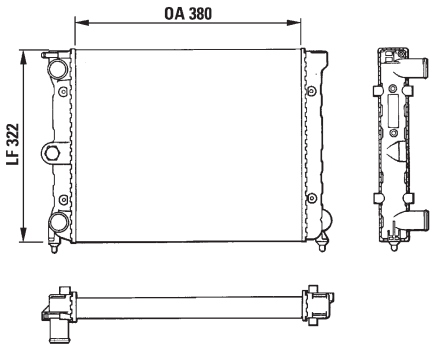


| | | |
|---|---|---|
| SEAT 867121253F<br>VOLKSWAGEN 867121253E | 380x322x34 | 32mm L |
| | | 32mm L |

## 883819 TA341 ALM

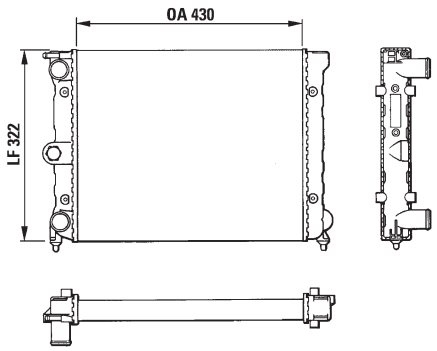


| | | |
|---|---|---|
| VOLKSWAGEN 171121253CJ | 430x322x34 | 32mm L |
| | | 32mm L |

## 883820 TA342 ALM

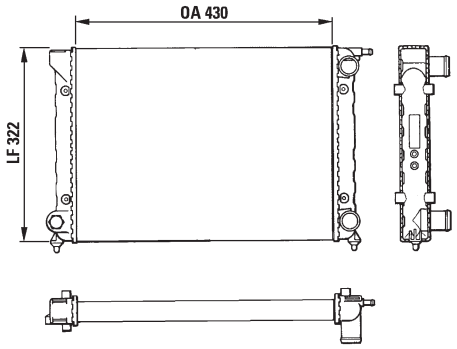


| | | |
|---|---|---|
| VOLKSWAGEN 191121253L | 430x322x34 | 32mm L |
| | | 32mm L |

## 883825 TA555 ALM

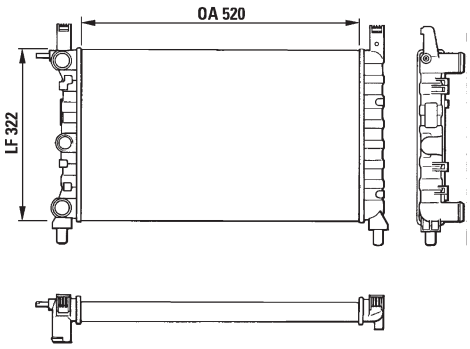


| | | |
|---|---|---|
| FIAT 7678729 | 520x322x34 | 35mm L |
| | | 35mm L |

## 883849 TA348 ALM

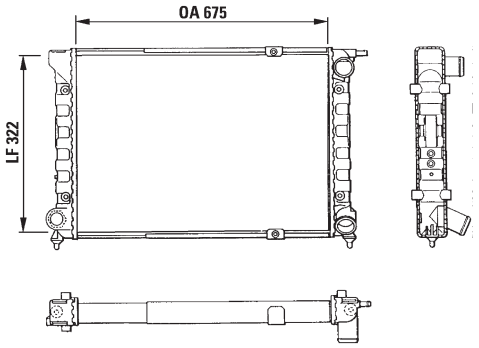


| | | |
|---|---|---|
| VOLKSWAGEN 191121253 | 675x322x34 | 32mm L |
| | | 32mm L |

## 883851 TA354 ALM

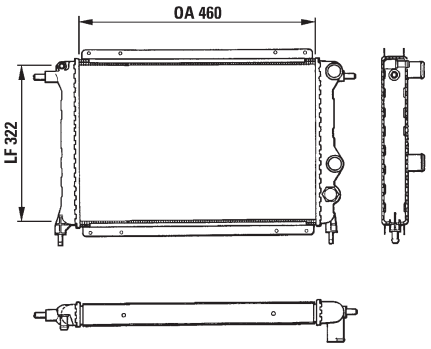


| | | |
|---|---|---|
| RENAULT 7700757854 | 460x322x34 | 32mm L |
| | | 32mm L |

## 883852 TA358 ALM

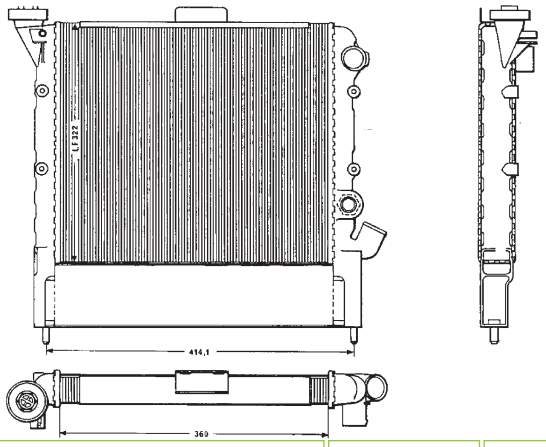


| | | |
|---|---|---|
| RENAULT 7700757930 | 360x322x34 | 32mm L |
| | | 32mm L |

## 883856 TA396 ALM

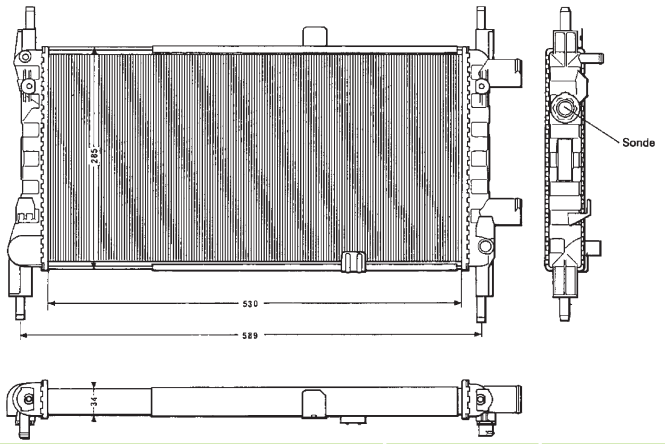


| | | |
|---|---|---|
| OPEL 1302049 | 530x285x34 | 34mm L |
| | | 34mm L |

## 883857 TA309 ALM

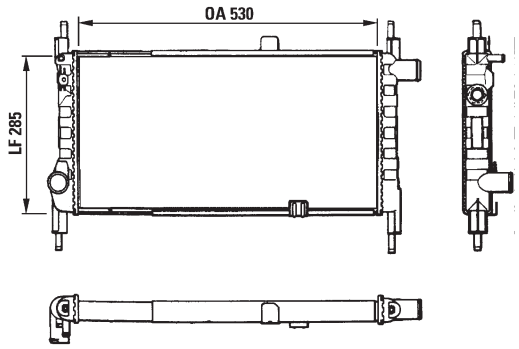


| | | |
|---|---|---|
| OPEL 1302074<br>VAUXHALL 90180560 | 530x285x34 | L |
| | | L |

## 883858 TA356 ALM

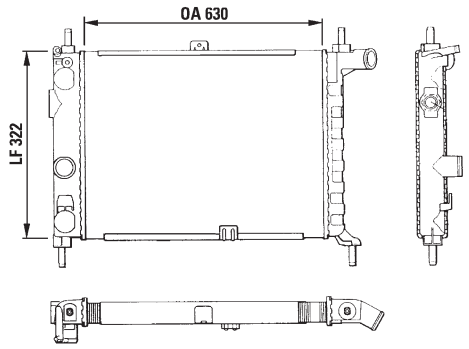


| | | |
|---|---|---|
| OPEL 1302077<br>VAUXHALL 90180561 | 630x322x34 | L |
| | | L |

## 883860 TA490 ALM

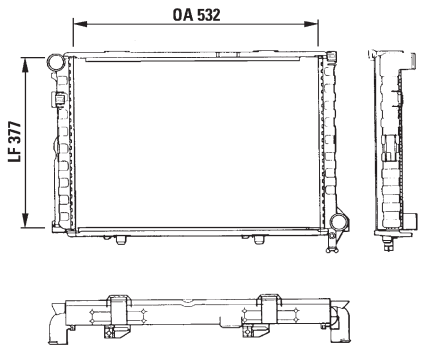


| | | |
|---|---|---|
| MERCEDES 1245004903 | 533x377,5x34 | 36mm L |
| | | 36mm L |

## 883863 TA463 ALM

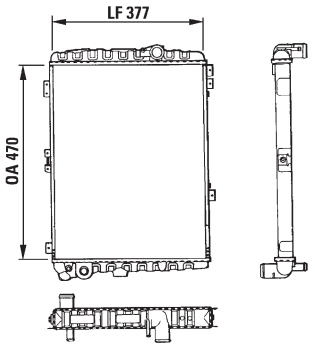


| | | |
|---|---|---|
| AUDI 893121251F | 470x377,5x34 | 32mm L |
| | | 32mm L |

## 883864 TA464 ALM

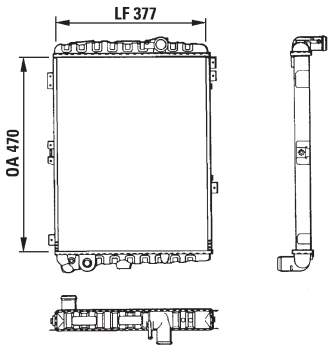


| | | |
|---|---|---|
| VOLKSWAGEN 321121253BQ | 470x377,5x34 | 32mm L |
| | | 32mm L |

## 883866 TA850 ALM

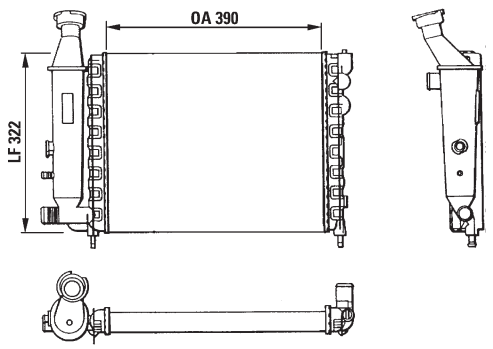


| | | |
|---|---|---|
| CITROEN 96011831 | 390x322x34 | 32mm L |
| | | 32mm L |

## 883871 TA480 ALM

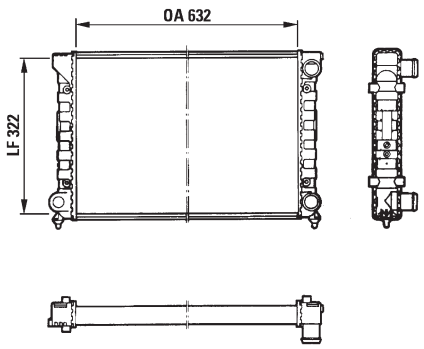


| | | |
|---|---|---|
| VOLKSWAGEN 353121253F | 632x322x34 | 32mm L |
| | | 32mm L |

## 883869 TA478 ALM

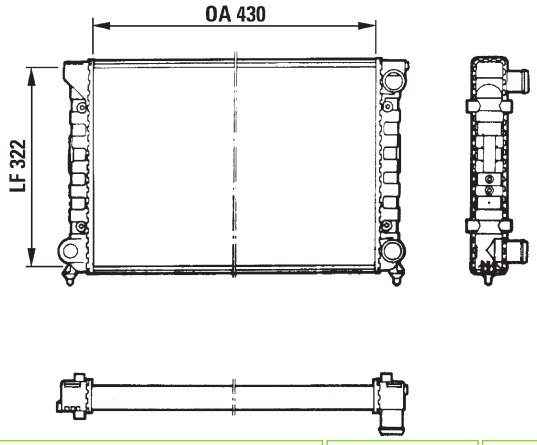


| | | |
|---|---|---|
| VOLKSWAGEN 353121253AA | 430x322x34 | 32mm L |
| | | 32mm L |

## 883875 TA489 ALM

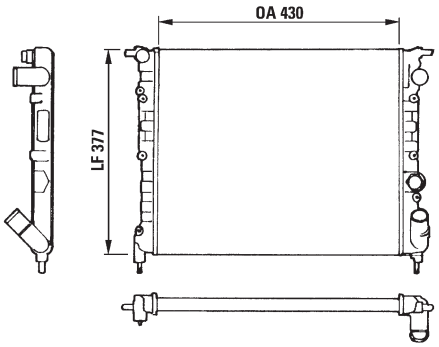


| | | |
|---|---|---|
| RENAULT 7701034769 | 430x377,5x23 | 32mm L |
| | | 32mm L |

## 883870 TA479 ALM

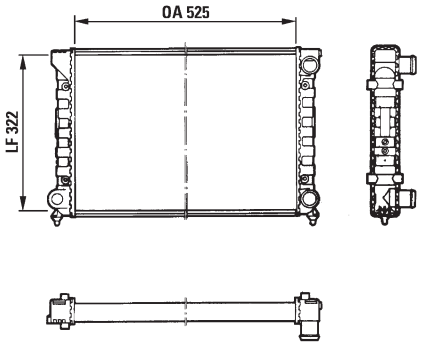


| | | |
|---|---|---|
| VOLKSWAGEN 353121253AC | 525x322x34 | 32mm L |
| | | 32mm L |

## 883876 TA234 ALM

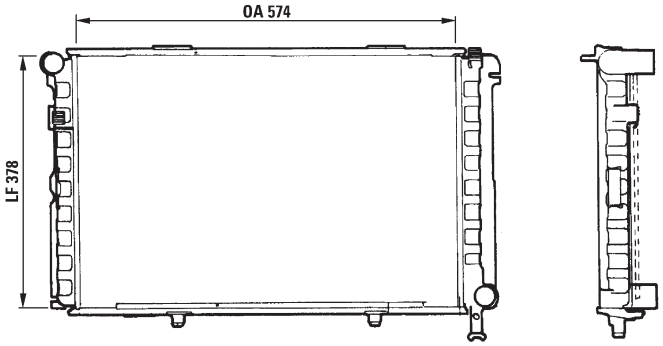


| | | |
|---|---|---|
| MERCEDES 2015001903 | 574x377,5x34 | 36mm L |
| | | 36mm L |

## 883877 TA475 ALM

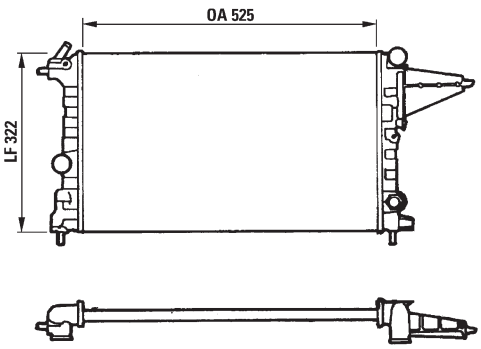


| | | | |
|---|---|---|---|
| OPEL | 90264491 | 525x322x23 | 34mm L |
| VAUXHALL | 90264491 | - | 34mm L |

## 883881 TA506 ALM

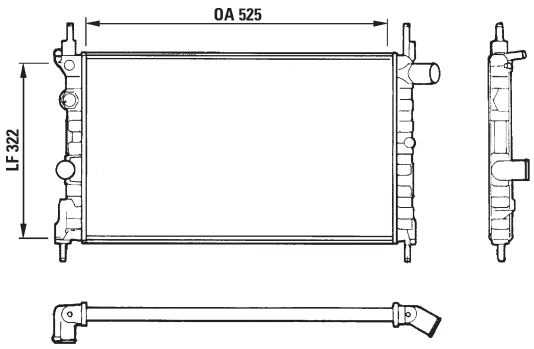


| | | | |
|---|---|---|---|
| OPEL | 1300100 | 525x322x34 | 34mm L |
| VAUXHALL | 90352138 | - | 34mm L |

## 883878 TA485 ALM

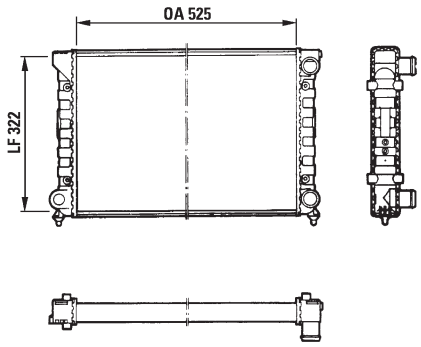


| | | | |
|---|---|---|---|
| OPEL | 1300088 | 525x322x34 | 34mm L |
| VAUXHALL | 90323474 | + | 34mm L |

## 883920 TA370 ALM

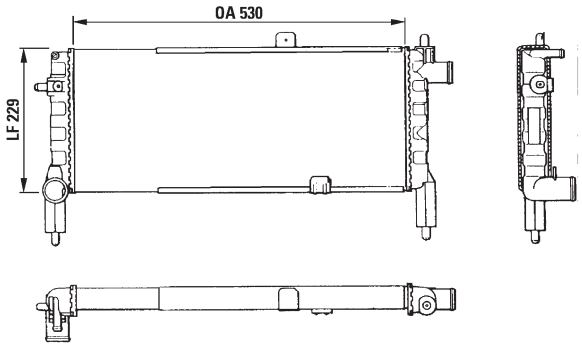


| | | | |
|---|---|---|---|
| OPEL | 1300016 | 530x229x34 | 34mm L |
| VAUXHALL | 90298318 | - | 34mm L |

## 883880 TA499 ALM

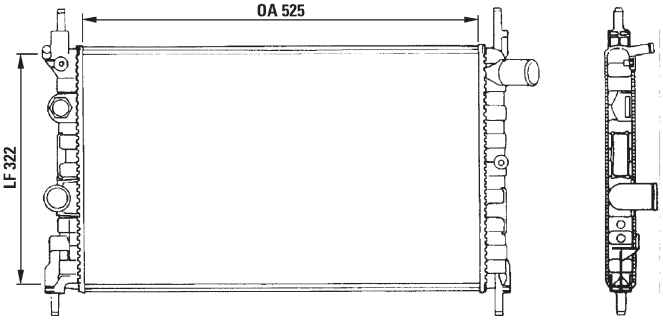


| | | | |
|---|---|---|---|
| OPEL | 1302057 | 525x322x23 | 34mm L |
| VAUXHALL | 90351829 | - | 34mm L |

## 883921 TA400 ALM

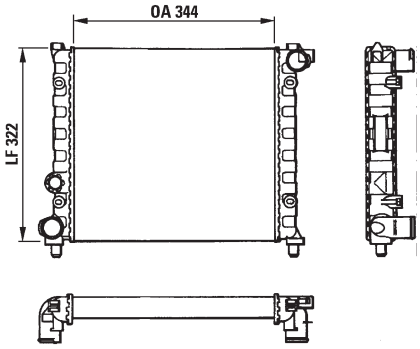


| | | | |
|---|---|---|---|
| SEAT | SE021117002C | 344x322x34 | 32mm L |
| | | - | 32mm L |

## 883954 TA182 ALM

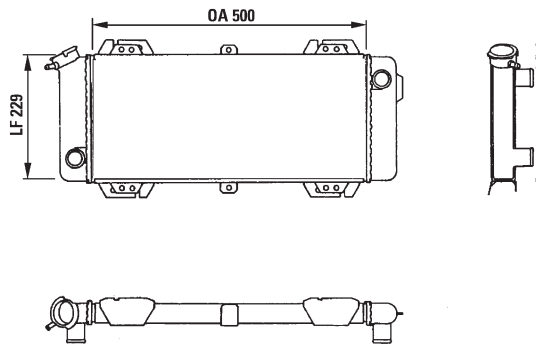


| | | |
|---|---|---|
| FORD 6122462 | 500x229x34 | 32mm L |
| | - | 32mm L |

## 883959 TA181 ALM

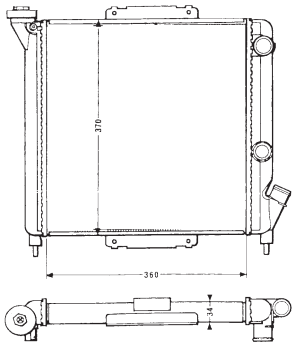


| | | |
|---|---|---|
| RENAULT 7702146438 | 360x370x34 | 32mm L |
| | - | 32mm L |

## 883956 TA186 ALM

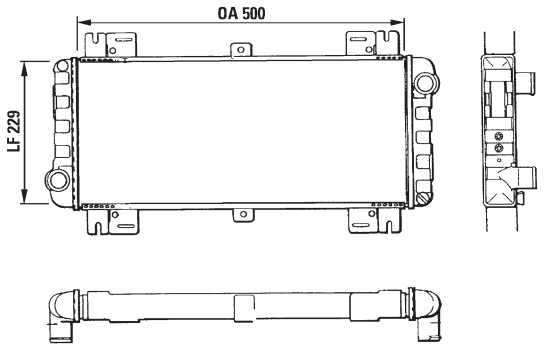


| | | |
|---|---|---|
| FORD 6134546 | 500x229x34 | 32mm L |
| | - | 32mm L |

## 883958 TA456 ALM

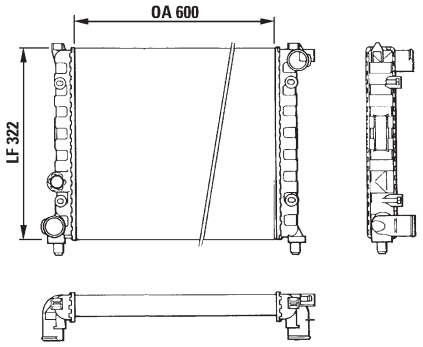


| | | |
|---|---|---|
| SEAT SE021117002A | 600x322x34 | 32mm L |
| | - | 32mm L |

| OE | PROD | Valeo |
|---|---|---|
| **ALFA ROMEO => FIAT GROUP.** | | |
| **ARO** | | |
| 1300K3 | | 730040 |
| 6001025340 | | 730973 |
| **AUDI => VAG GROUP.** | | |
| **AUTOBIANCHI => FIAT GROUP.** | | |
| **BMW** | | |
| 13541247145 | | 732198 |
| 17101247145 | | 732198 |
| 17101247376 | | 819412 |
| 17101432819 | | 734301 |
| 17101439101 | | 734894 |
| 17101439103 | | 734895 |
| 17101715319 | | 732199 |
| 17101723898 | | 731512 |
| 17101728769 | | 731520 |
| 17107544668 | | 734895 |
| 17107544669 | | 734896 |
| 17111109986 | | 731520 |
| 17111178215 | | 819414 |
| 17111427153 | | 734301 |
| 17111433025 | | 732199 |
| 17111436060 | | 734277 |
| 17111436061 | | 734277 |
| 17111436062 | | 735223 |
| 17111436062 | | 735233 |
| 17111436063 | | 735233 |
| 17111436063 | | 735223 |
| 17111439104 | | 734896 |
| 17111702453 | | 731523 |
| 17111702762 | | 731523 |
| 17111707563 | | 819395 |
| 17111709350 | | 819395 |
| 17111709458 | | 734615 |
| 17111712007 | | 819414 |
| 17111712267 | | 732099 |
| 17111712823 | | 819397 |
| 17111712977 | | 731508 |
| 17111712982 | | 730365 |
| 17111719024 | | 731509 |
| 17111719256 | | 819397 |
| 17111719300 | | 731509 |
| 17111719301 | | 731508 |
| 17111719303 | | 731520 |
| 17111719304 | | 730365 |
| 17111719305 | | 731520 |
| 17111719306 | | 819412 |
| 17111719309 | | 819413 |
| 17111723398 | | 732099 |
| 17111723468 | | 732099 |
| 17111723537 | | 730365 |
| 17111723637 | | 819418 |
| 17111723689 | | 734615 |
| 17111723826 | | 731523 |
| 17111723898 | | 731512 |
| 17111723941 | | 732456 |
| 17111723990 | | 732198 |

| OE | PROD | Valeo |
|---|---|---|
| **BMW(.../...)** | | |
| 17111728905 | | 732198 |
| 17111737760 | | 819412 |
| 17111740698 | | 731725 |
| 17111740699 | | 734301 |
| 17112226336 | | 734615 |
| 17112227281 | | 731514 |
| 17112242138 | | 819418 |
| 17112243445 | | 819418 |
| 17112244542 | | 732593 |
| 17112244543 | | 734421 |
| 17112244647 | | 731514 |
| 17112245510 | | 734289 |
| 17112245511 | | 734289 |
| 17112246012 | | 731766 |
| 17112247345 | | 734394 |
| 17112248478 | | 734395 |
| 17113400400 | | 817383 |
| 17117503761 | | 696118 |
| 17117503762 | | 696118 |
| 17117503763 | | 696118 |
| 17117507972 | | 734396 |
| 17117510617 | | 696118 |
| 17117519209 | | 734897 |
| 17117519212 | | 734898 |
| 17117521046 | | 735166 |
| 17117521048 | | 735166 |
| 17117525508 | | 696118 |
| 17117534914 | | 735476 |
| 17117534915 | | 735477 |
| 17117542199 | | 735194 |
| 17117553111 | | 735195 |
| 17117562079 | | 735194 |
| 17117600511 | | 735451 |
| 17117600516 | | 735453 |
| 17117600520 | | 735454 |
| 17117612954 | | 735278 |
| 17117618807 | | 735455 |
| 17117787442 | | 735036 |
| 17117788903 | | 735165 |
| 17117790297 | | 735165 |
| 17117792832 | | 735034 |
| 17117794488 | | 735165 |
| 17117794836 | | 735036 |
| 17117795878 | | 735475 |
| 17119071517 | | 734276 |
| 17119071518 | | 734276 |
| 17119071519 | | 734276 |
| 17427543282 | | 696273 |
| 17427562080 | | 696275 |
| 17427563259 | | 696274 |
| 17512243345 | | 817873 |
| 17512245512 | | 817875 |
| 17512246031 | | 817876 |
| 17512246795 | | 817874 |
| 17512247359 | | 817877 |
| 17517593845 | | 818253 |
| 17517600530 | | 818259 |
| 17517600531 | | 818260 |
| 17517618809 | | 818263 |
| 17517786351 | | 818716 |
| 17517787446 | | 818796 |

| OE | PROD | Valeo |
|---|---|---|
| **BMW(.../...)** | | |
| 17517789793 | | 818715 |
| 17517793370 | | 818715 |
| 17517795823 | | 818273 |
| 17517823570 | | 818252 |
| 17517823571 | | 818254 |
| 64111368875 | | 812296 |
| 64111373772 | | 812238 |
| 64111384725 | | 883982 |
| 64111393212 | | 812240 |
| 64116906270 | | 812365 |
| 64118351171 | | 812239 |
| 64118372523 | | 812294 |
| 64118372771 | | 812318 |
| 64118372783 | | 812220 |
| 64118373175 | | 812362 |
| 64118373786 | | 812360 |
| 64118391362 | | 812238 |
| 64118391363 | | 812296 |
| 64119128953 | | 812401 |
| 64502282939 | | 817850 |
| 64508372039 | | 696123 |
| 64508379885 | | 817850 |
| 64508381362 | | 817851 |
| 64509122825 | | 817850 |
| 64509122827 | | 817851 |
| 64509169772 | | 814011 |
| 64509169791 | | 814011 |
| 64531392941 | | 816981 |
| 64536914033 | | 814287 |
| 64536914216 | | 817575 |
| 64536930038 | | 814011 |
| 64536930039 | | 814012 |
| 64536930040 | | 814011 |
| 64537618770 | | 814192 |
| 64538373924 | | 816922 |
| 64538375513 | | 817561 |
| 64538377614 | | 817383 |
| 64538377648 | | 817405 |
| 64538378438 | | 817607 |
| 64538378439 | | 817406 |
| 64538381543 | | 817575 |
| 64538391647 | | 817248 |
| 64539169526 | | 814012 |
| 64539218121 | | 814189 |
| 64539218122 | | 814190 |
| 64539218123 | | 814191 |
| 64539219843 | | 814113 |
| 64541392913 | | 696058 |
| 64546905076 | | 696119 |
| 64546921395 | | 696121 |
| 64546921946 | | 696121 |
| 64546922554 | | 696119 |
| 64546922555 | | 696119 |
| 64548351577 | | 696058 |
| 64548373957 | | 696119 |
| 64548380780 | | 696120 |
| **CHRYSLER** | | |
| 4546902 | | 731749 |
| 4644266 | | 732780 |
| 4644365 | | 817015 |
| 4644708 | | 812049 |

| OE | PROD | Valeo |
|---|---|---|
| **CHRYSLER(.../...)** | | |
| 4662589 | | 817073 |
| 4682591 | | 817074 |
| 4740097 | | 732426 |
| 4758305 | | 817075 |
| 4798013 | | 731531 |
| 4798014 | | 816959 |
| 4798015 | | 816945 |
| 4809129AA | | 814290 |
| 4809227AD | | 817477 |
| 5011078AA | | 812049 |
| 5011395AA | | 816991 |
| 5017404 | | 732704 |
| 5017404AB | | 732704 |
| 5017405 | | 817445 |
| 5017407 | | 696365 |
| 5017621 | | 817475 |
| 5072260AA | | 732883 |
| 5072262AA | | 817582 |
| 5142488AA | | 732956 |
| 5142489AA | | 817736 |
| 5142490AA | | 817739 |
| 5142995AA | | 696012 |
| **CITROEN => PSA GROUP.** | | |
| **DACIA** | | |
| 6001547484 | | 812374 |
| 6001550660 | | 814051 |
| 7700428082 | | 732621 |
| 7700838134 | | 731378 |
| 8200182361 | | 817701 |
| 8200189288 | | 732817 |
| 8200241088 | | 817827 |
| 8200343476 | | 732721 |
| 8200513983 | | 814051 |
| 8200741257 | | 814077 |
| 8200880550 | | 735279 |
| 8200880551 | | 814178 |
| **DAEWOO** | | |
| 96109532 | | 734766 |
| 96144570 | | 734596 |
| 96144847 | | 732483 |
| 96144850 | | 734596 |
| 96181369 | | 734252 |
| 96182260 | | 734249 |
| 96182261 | | 734248 |
| 96182648 | | 734761 |
| 96231949 | | 812335 |
| 96265216 | | 814277 |
| 96271475 | | 735266 |
| 96271477 | | 734762 |
| 96273594 | | 734764 |
| 96273596 | | 734767 |
| 96314162 | | 734250 |
| 96322941 | | 734251 |
| 96351102 | | 734767 |
| 96351103 | | 734764 |
| 96351931 | | 734765 |
| 96536523 | | 735157 |
| 96536525 | | 735158 |

| OE | PROD | Valeo |
|---|---|---|
| **DAEWOO(.../...)** | | |
| 96536669 | | 735158 |
| 96553378 | | 735159 |
| **DAF** | | |
| 1629115 | | 818986 |
| **DAIHATSU** | | |
| 88450B4020 | | 814206 |
| 1640087217000 | | 730397 |
| 1640087218000 | | 730397 |
| 1640087222000 | | 731623 |
| 1640087223000 | | 730397 |
| 1640087226000 | | 731623 |
| 1640087286000 | | 734209 |
| 1640087294000 | | 734208 |
| 1640087717000 | | 731625 |
| 1640087723000 | | 731625 |
| 1640087727000 | | 734101 |
| 1640087744000 | | 731625 |
| 1640087752000 | | 731625 |
| 1640087767000 | | 731020 |
| 1640087768000 | | 731020 |
| 1640087769000 | | 731019 |
| 1640087770000 | | 731856 |
| 1640087774000 | | 731625 |
| 1640087776000 | | 731857 |
| 1640087F07000 | | 731019 |
| 1640087F12000 | | 734104 |
| 1640087F29000 | | 731620 |
| 1640087F33000 | | 734103 |
| 1640087F37000 | | 734102 |
| 1640087F40000 | | 731620 |
| 1640087F41000 | | 734103 |
| 1640087F42000 | | 731620 |
| 1640087F43000 | | 734210 |
| 1640087F44000 | | 734210 |
| 1640087F45000 | | 731857 |
| 1640087F46000 | | 734210 |
| 1640087F47000 | | 734210 |
| 1640087F48000 | | 731857 |
| 1640097201000 | | 734106 |
| 1640097202000 | | 734105 |
| 1640097210000 | | 734105 |
| 16400B1010000 | | 735259 |
| 16400B2070000 | | 735257 |
| **FIAT GROUP.** | | |
| 0007655948 | | 811071 |
| 0060504387 | | 811010 |
| 0060507819 | | 811068 |
| 0060507820 | | 811068 |
| 0060533756 | | 811389 |
| 0060538379 | | 816710 |
| 0060573429 | | 811071 |
| 0060585534 | | 731283 |
| 0060586994 | | 731251 |
| 0060590292 | | 731251 |
| 0060595583 | | 731251 |
| 0060603939 | | 731591 |
| 0060610873 | | 731591 |
| 0060619007 | | 817861 |
| 0060620437 | | 731559 |

| OE | PROD | Valeo |
|---|---|---|
| **FIAT GROUP.(.../...)** | | |
| 0060623447 | | 731591 |
| 0060624581 | | 732248 |
| 0060625330 | | 731561 |
| 0060626029 | | 731561 |
| 0060628578 | | 731283 |
| 0060651919 | | 732011 |
| 0060651920 | | 732012 |
| 0060651921 | | 732013 |
| 0060656716 | | 732722 |
| 0060806046 | | 811071 |
| 1305199080+13523254080 | | 696101 |
| 1307012080 | | 817632 |
| 1307391080 | | 731611 |
| 1307393080 | | 730995 |
| 1307395080 | | 730997 |
| 1311003080 | | 731611 |
| 1311521080 | | 730999 |
| 1312857080 | | 818191 |
| 1317828080 | | 731611 |
| 1321309080 | | 812141 |
| 1324816080 | | 730997 |
| 1327478080 | | 731611 |
| 1329225080 | | 731611 |
| 1329226080 | | 731611 |
| 1329227080 | | 731611 |
| 1340166080 | | 818018 |
| 1340359080 | | 735255 |
| 1340934080 | | 817632 |
| 1341513080 | | 731611 |
| 1341514080 | | 731611 |
| 1341515080 | | 731611 |
| 13523254080+1305199080 | | 696101 |
| 1400821280 | | 696132 |
| 1471463080 | | 731165 |
| 1472059080 | | 816851 |
| 1473910080 | | 731166 |
| 1474401080 | | 731166 |
| 1475060080 | | 731166 |
| 1475844080 | | 731168 |
| 1475845080 | | 731168 |
| 1476529080 | | 731166 |
| 1482543080 | | 732692 |
| 1485799080 | | 731165 |
| 1486721080 | | 816852 |
| 1489257080 | | 817668 |
| 1489396080 | | 817650 |
| 1489398080 | | 817579 |
| 1489463080 | | 732692 |
| 1489767080 | | 696142 |
| 1494742080 | | 696142 |
| 4459735 | | 883053 |
| 46400850 | | 731303 |
| 46403098 | | 811071 |
| 46404163 | | 731972 |
| 46405421 | | 811073 |
| 46405475 | | 811073 |
| 46405843 | | 730309 |
| 46405919 | | 731974 |
| 46407450 | | 732705 |
| 46414171 | | 731375 |
| 46414206 | | 730519 |

| OE | PROD | Valeo |
|---|---|---|
| **FIAT GROUP.(.../...)** | | |
| 46414207 | | **730520** |
| 46417050 | | **732007** |
| 46417059 | | **732005** |
| 46420484 | | **731981** |
| 46421463 | | **731592** |
| 46421466 | | **731592** |
| 46427347 | | **698178** |
| 46430837 | | **731374** |
| 46435656 | | **811073** |
| 46440215 | | **817881** |
| 46440250 | | **816985** |
| 46440541 | | **732147** |
| 46442937 | | **698180** |
| 46444726 | | **817901** |
| 46449096 | | **732004** |
| 46449104 | | **732006** |
| 46451997 | | **731375** |
| 46453389 | | **732147** |
| 46459581 | | **817386** |
| 46462526 | | **732787** |
| 46465015 | | **730976** |
| 46465017 | | **731558** |
| 46465018 | | **698178** |
| 46465021 | | **731562** |
| 46466627 | | **730981** |
| 46467511 | | **731593** |
| 46469281 | | **816666** |
| 46472572 | | **734235** |
| 46473867 | | **734219** |
| 46475456 | | **730309** |
| 46479313 | | **817411** |
| 46480388 | | **732218** |
| 46480692 | | **698362** |
| 46480707 | | **734220** |
| 46514417 | | **732503** |
| 46514942 | | **732557** |
| 46517134 | | **811071** |
| 46517926 | | **734236** |
| 46518233 | | **732787** |
| 46519780 | | **810924** |
| 46521746 | | **730519** |
| 46521747 | | **730520** |
| 46524603 | | **732578** |
| 46524619 | | **732913** |
| 46525657 | | **732557** |
| 46525741 | | **696099** |
| 46527489 | | **734221** |
| 46527737 | | **818009** |
| 46529669 | | **732557** |
| 46532988 | | **818019** |
| 46534674 | | **696100** |
| 46534995 | | **732788** |
| 46535003 | | **732557** |
| 46535007 | | **734768** |
| 46536388 | | **731561** |
| 46537992 | | **732557** |
| 46538495 | | **816666** |
| 46541006 | | **696095** |
| 46541535 | | **698178** |
| 46542852 | | **696095** |
| 46542854 | | **696095** |

| OE | PROD | Valeo |
|---|---|---|
| **FIAT GROUP.(.../...)** | | |
| 46544775 | | **732580** |
| 46544780 | | **732582** |
| 46546944 | | **732913** |
| 46547089 | | **732623** |
| 46547096 | | **734220** |
| 46547675 | | **818007** |
| 46547898 | | **732623** |
| 46548483 | | **732006** |
| 46548485 | | **732005** |
| 46550400 | | **696098** |
| 46550402 | | **696094** |
| 46550446 | | **696099** |
| 46551214 | | **731592** |
| 46551216 | | **811392** |
| 46551218 | | **730489** |
| 46551506 | | **698482** |
| 46553325 | | **817883** |
| 46554979 | | **732578** |
| 46556323 | | **731591** |
| 46558107 | | **817412** |
| 46558704 | | **732789** |
| 46559851 | | **696100** |
| 46650400 | | **696098** |
| 46721212 | | **812145** |
| 46721527 | | **812400** |
| 46722095 | | **812081** |
| 46722359 | | **812281** |
| 46722587 | | **812383** |
| 46722710 | | **812358** |
| 46722928 | | **812280** |
| 46723042 | | **812211** |
| 46723249 | | **731977** |
| 46723450 | | **812329** |
| 46736953 | | **731303** |
| 46736955 | | **731304** |
| 46737569 | | **732503** |
| 46739749 | | **734224** |
| 46742536 | | **696102** |
| 46743390 | | **696108** |
| 46743391 | | **696108** |
| 46743392 | | **696109** |
| 46743393 | | **734283** |
| 46743394 | | **732730** |
| 46744880 | | **817862** |
| 46745043 | | **734225** |
| 46745045 | | **696106** |
| 46745049 | | **732578** |
| 46745051 | | **696197** |
| 46745809 | | **734229** |
| 46745840 | | **817669** |
| 46745841 | | **817879** |
| 46749000 | | **735172** |
| 46749005 | | **735171** |
| 46749018 | | **735171** |
| 46750717 | | **732812** |
| 46750718 | | **732005** |
| 46753255 | | **732584** |
| 46754746 | | **732557** |
| 46754752 | | **817384** |
| 46756242 | | **817883** |
| 46759742 | | **731972** |

| OE | PROD | Valeo |
|---|---|---|
| **FIAT GROUP.(.../...)** | | |
| 46763322 | | **734237** |
| 46763325 | | **734238** |
| 46764253 | | **818725** |
| 46766167 | | **734228** |
| 46768973 | | **817463** |
| 46773321 | | **731979** |
| 46776301 | | **732913** |
| 46777410 | | **732792** |
| 46778148 | | **732578** |
| 46778155 | | **732913** |
| 46782685 | | **734220** |
| 46783702 | | **730520** |
| 46785738 | | **698483** |
| 46785741 | | **698484** |
| 46788046 | | **734225** |
| 46788049 | | **817684** |
| 46788052 | | **817685** |
| 46789792 | | **698562** |
| 46790658 | | **817527** |
| 46798741 | | **732924** |
| 46798743 | | **732925** |
| 46799410 | | **698786** |
| 46799655 | | **812278** |
| 46799862 | | **818006** |
| 46799894 | | **734228** |
| 46803028 | | **735172** |
| 46803031 | | **735172** |
| 46803035 | | **735171** |
| 46803039 | | **735171** |
| 46807378 | | **734692** |
| 46810017 | | **817748** |
| 46818599 | | **696197** |
| 46819261 | | **732948** |
| 46820833 | | **818021** |
| 46821270 | | **818017** |
| 46826678 | | **735296** |
| 46827081 | | **732851** |
| 46827082 | | **732851** |
| 46829340 | | **817385** |
| 46831804 | | **818726** |
| 46833511 | | **732948** |
| 46834067 | | **734364** |
| 46834075 | | **734362** |
| 46836770 | | **817882** |
| 46841314 | | **696197** |
| 46842843 | | **734733** |
| 46842846 | | **734283** |
| 46849068 | | **818711** |
| 46849149 | | **696102** |
| 50005580 | | **811387** |
| 50010242 | | **732685** |
| 50501506 | | **735256** |
| 50501508 | | **732248** |
| 50507287 | | **818187** |
| 51702461 | | **696108** |
| 51702463 | | **732854** |
| 51706057 | | **734363** |
| 51706204 | | **734932** |
| 51706942 | | **734362** |
| 51708005 | | **734361** |
| 51708405 | | **696104** |

| OE | PROD | Valeo |
|---|---|---|
| **FIAT GROUP.(.../...)** | | |
| 51708727 | | **732913** |
| 51708843 | | **814198** |
| 51708909 | | **818020** |
| 51714679 | | **734459** |
| 51715999 | | **817862** |
| 51718122 | | **735297** |
| 51718679 | | **818229** |
| 51718953 | | **818712** |
| 51721477 | | **696106** |
| 51723827 | | **734458** |
| 51724183 | | **734457** |
| 51724188 | | **732923** |
| 51732069 | | **698788** |
| 51732993 | | **818021** |
| 51733001 | | **734361** |
| 51733013 | | **818020** |
| 51733052 | | **817882** |
| 51735217 | | **734228** |
| 51738357 | | **696106** |
| 51738360 | | **696104** |
| 51742164 | | **698484** |
| 51742221 | | **732939** |
| 51749911 | | **734412** |
| 51749913 | | **818721** |
| 51759805 | | **734923** |
| 51759806 | | **734924** |
| 51759807 | | **734932** |
| 51763472 | | **817703** |
| 51767143 | | **818005** |
| 51770406 | | **696020** |
| 51770410 | | **732877** |
| 51770411 | | **732878** |
| 51770412 | | **696023** |
| 51770416 | | **734339** |
| 51770417 | | **818722** |
| 51770418 | | **696022** |
| 51770420 | | **734345** |
| 51770436 | | **817730** |
| 51770437 | | **696021** |
| 51773189 | | **734923** |
| 51773192 | | **734924** |
| 51773195 | | **734932** |
| 51773281 | | **734981** |
| 51775637 | | **735085** |
| 51779915 | | **735175** |
| 51782753 | | **818162** |
| 51782907 | | **818830** |
| 51786211 | | **814155** |
| 51792329 | | **696335** |
| 532125 | | **883038** |
| 55181418 | | **817749** |
| 55197877 | | **817748** |
| 55199705 | | **817749** |
| 55700406 | | **818193** |
| 55700408 | | **818192** |
| 55700447 | | **735042** |
| 55700448 | | **735040** |
| 55700617 | | **735041** |
| 55700635 | | **818824** |
| 55702237 | | **818823** |
| 55703927 | | **735041** |

| OE | PROD | Valeo |
|---|---|---|
| **FIAT GROUP.(.../...)** | | |
| 5882355 | | **883428** |
| 5893932 | | **812081** |
| 5947797 | | **812023** |
| 5951571 | | **883806** |
| 5969172 | | **883765** |
| 5969174 | | **883764** |
| 5974838 | | **883806** |
| 5979815 | | **811392** |
| 5981189 | | **730040** |
| 5981711 | | **811387** |
| 5998952 | | **816707** |
| 60504449 | | **883038** |
| 60526047 | | **811389** |
| 60538689 | | **812022** |
| 60578740 | | **816710** |
| 60610662 | | **816973** |
| 60610873 | | **731591** |
| 60619883 | | **732696** |
| 60624581 | | **732248** |
| 60627910 | | **732505** |
| 60628578 | | **731283** |
| 60628820 | | **817527** |
| 60651920 | | **732012** |
| 60651921 | | **732013** |
| 60651922 | | **732505** |
| 60651923 | | **732696** |
| 60656716 | | **732722** |
| 60657849 | | **696111** |
| 60661889 | | **731283** |
| 60663070 | | **732011** |
| 60663071 | | **732012** |
| 60663808 | | **732505** |
| 60668109 | | **817818** |
| 60678468 | | **817580** |
| 60679288 | | **732939** |
| 60681123 | | **696113** |
| 60686738 | | **817861** |
| 60690283 | | **732722** |
| 60690404 | | **732013** |
| 60690405 | | **732248** |
| 60690406 | | **735256** |
| 60690407 | | **731283** |
| 60690408 | | **732696** |
| 60692222 | | **818794** |
| 60692418 | | **696109** |
| 60692693 | | **696111** |
| 60694104 | | **696113** |
| 60694767 | | **818187** |
| 60698005 | | **818187** |
| 60779298 | | **812279** |
| 60779451 | | **812279** |
| 60779470 | | **812176** |
| 60805074 | | **811066** |
| 60806046 | | **811071** |
| 60809015 | | **811075** |
| 60811128 | | **811073** |
| 60811291 | | **811071** |
| 60814521 | | **731278** |
| 60815099 | | **812400** |
| 7078698 | | **812283** |
| 71714180 | | **812194** |

| OE | PROD | Valeo |
|---|---|---|
| **FIAT GROUP.(.../...)** | | |
| 71735341 | | **731591** |
| 71735344 | | **731561** |
| 71735346 | | **811071** |
| 71735348 | | **731611** |
| 71735349 | | **730995** |
| 71735350 | | **731611** |
| 71735351 | | **730981** |
| 71735352 | | **730040** |
| 71735353 | | **810949** |
| 71735354 | | **731593** |
| 71735357 | | **730319** |
| 71735358 | | **730838** |
| 71735360 | | **730999** |
| 71735362 | | **811073** |
| 71735363 | | **811071** |
| 71735364 | | **811071** |
| 71735365 | | **883765** |
| 71735366 | | **730981** |
| 71735367 | | **730980** |
| 71735368 | | **816707** |
| 71735369 | | **731306** |
| 71735370 | | **731592** |
| 71735371 | | **732623** |
| 71735372 | | **811071** |
| 71735377 | | **731283** |
| 71735378 | | **731251** |
| 71735411 | | **731251** |
| 71736177 | | **731591** |
| 71736178 | | **731974** |
| 71736181 | | **732557** |
| 71736182 | | **732557** |
| 71736183 | | **732557** |
| 71736189 | | **734236** |
| 71736501 | | **811073** |
| 71740292 | | **735021** |
| 71740487 | | **696085** |
| 73500545 | | **817750** |
| 7549961 | | **811387** |
| 7550439 | | **816707** |
| 7555444 | | **730040** |
| 7555802 | | **811380** |
| 7556132 | | **883827** |
| 7556135 | | **883813** |
| 7556136 | | **883811** |
| 7556137 | | **883812** |
| 7556140 | | **883825** |
| 7559876 | | **811385** |
| 7561478 | | **730990** |
| 7566876 | | **883806** |
| 7566877 | | **883806** |
| 7567061 | | **811392** |
| 7570401 | | **811386** |
| 7578119 | | **730991** |
| 7585721 | | **883053** |
| 7586746 | | **811067** |
| 7588122 | | **816707** |
| 7595533 | | **816707** |
| 7602723 | | **696095** |
| 7603841 | | **816707** |
| 7603842 | | **816707** |
| 7607190 | | **816666** |

| OE | PROD | Valeo |
|---|---|---|
| **FIAT GROUP.(.../...)** | | |
| 7610803 | | **810949** |
| 7611159 | | **811073** |
| 7612178 | | **811071** |
| 7619387 | | **812024** |
| 7632018 | | **811070** |
| 7641779 | | **811071** |
| 7652127 | | **730990** |
| 7655947 | | **811073** |
| 7655948 | | **811071** |
| 7661840 | | **812337** |
| 7666079 | | **811070** |
| 7678729 | | **883825** |
| 7684054 | | **812334** |
| 7685063 | | **730991** |
| 7685154 | | **812303** |
| 7691274 | | **811067** |
| 7693062 | | **811387** |
| 7700881 | | **730520** |
| 7703429 | | **730519** |
| 7707251 | | **883765** |
| 7711521 | | **816707** |
| 7718660 | | **730976** |
| 7718669 | | **730981** |
| 7721579 | | **730980** |
| 7727204 | | **810949** |
| 7730497 | | **816707** |
| 7732873 | | **811070** |
| 77362540 | | **812336** |
| 77363898 | | **812384** |
| 77365588 | | **812426** |
| 7736850 | | **811073** |
| 7738826 | | **817884** |
| 7739073 | | **811069** |
| 7739937 | | **883813** |
| 7739938 | | **883811** |
| 7739939 | | **816711** |
| 7739940 | | **883827** |
| 7739941 | | **811385** |
| 7739942 | | **883812** |
| 7741200 | | **698179** |
| 7741201 | | **698178** |
| 7741913 | | **730980** |
| 7745652 | | **731562** |
| 7753630 | | **811397** |
| 7753661 | | **696095** |
| 7753662 | | **696095** |
| 7754055 | | **811397** |
| 7754063 | | **811065** |
| 7754065 | | **812156** |
| 7754068 | | **811075** |
| 7757775 | | **811392** |
| 7760959 | | **731975** |
| 7760961 | | **731977** |
| 7762669 | | **696094** |
| 7766965 | | **811073** |
| 7767438 | | **731973** |
| 7767440 | | **731302** |
| 7767441 | | **732787** |
| 7767815 | | **731306** |
| 7774531 | | **732705** |
| 7775153 | | **811071** |

| OE | PROD | Valeo |
|---|---|---|
| **FIAT GROUP.(.../...)** | | |
| 7776507 | | **734239** |
| 7776508 | | **731304** |
| 7783504 | | **731976** |
| 7785122 | | **731980** |
| 7785927 | | **731282** |
| 7790356 | | **731979** |
| 7794069 | | **732688** |
| 7794871 | | **731978** |
| 7799061 | | **731281** |
| 82357295 | | **883799** |
| 82387449 | | **883809** |
| 82397785 | | **883799** |
| 82405440 | | **817896** |
| 82407559 | | **883809** |
| 82416664 | | **811381** |
| 82416665 | | **811381** |
| 82420113 | | **811066** |
| 82429172 | | **811056** |
| 82437468 | | **810984** |
| 82440378 | | **730319** |
| 82449677 | | **810984** |
| 82458169 | | **731276** |
| 82461145 | | **730838** |
| 82461146 | | **730838** |
| 82471989 | | **814292** |
| 82487879 | | **814293** |
| 82489087 | | **731278** |
| 82489093 | | **817899** |
| 93802646 | | **883787** |
| 93807661 | | **811348** |
| 9464420380 | | **812395** |
| 9566944680 | | **812116** |
| 9632953080 | | **732492** |
| 9635466180 | | **696139** |
| 9635494380 | | **696132** |
| 9641728080 | | **732830** |
| 9641728180 | | **732880** |
| 9641728380 | | **732881** |
| **FORD** | | |
| 1001855 | | **731734** |
| 1001856 | | **731617** |
| 1001857 | | **731735** |
| 1001859 | | **731736** |
| 1004039 | | **730483** |
| 1006154 | | **730563** |
| 1011638 | | **698155** |
| 1011670 | | **812272** |
| 1012954 | | **732003** |
| 1015261 | | **816948** |
| 1017785 | | **696158** |
| 1020254 | | **696160** |
| 1020622 | | **817936** |
| 1020914 | | **696158** |
| 1020917 | | **696159** |
| 1022553 | | **817232** |
| 1022614 | | **731387** |
| 1023920 | | **732497** |
| 1024051 | | **731257** |
| 1025529 | | **696157** |
| 1025532 | | **731992** |
| 1025533 | | **734772** |

| OE | PROD | Valeo |
|---|---|---|
| **FORD(.../...)** | | |
| 1029057 | | **816948** |
| 1029459 | | **731300** |
| 1029616 | | **731011** |
| 1029617 | | **731550** |
| 1030491 | | **734862** |
| 1036597 | | **734303** |
| 1036754 | | **696157** |
| 1040077 | | **819176** |
| 1041092 | | **812129** |
| 1042588 | | **732003** |
| 1056616 | | **731992** |
| 1060440 | | **817232** |
| 1061104 | | **817225** |
| 1061180 | | **732732** |
| 1061185 | | **732731** |
| 1061192 | | **732735** |
| 1062254 | | **812273** |
| 1062256 | | **812274** |
| 1062380 | | **817493** |
| 1075126 | | **696150** |
| 1075127 | | **696151** |
| 1075130 | | **696154** |
| 1075132 | | **696153** |
| 1075135 | | **696152** |
| 1078378 | | **817232** |
| 1084781 | | **817888** |
| 1086534 | | **817493** |
| 1086946 | | **731550** |
| 1088845 | | **696157** |
| 1091719 | | **817232** |
| 1091934 | | **732735** |
| 1092360 | | **732626** |
| 1092370 | | **732625** |
| 1092378 | | **698493** |
| 1093458 | | **735046** |
| 1093711 | | **732732** |
| 1093713 | | **732731** |
| 1098806 | | **731617** |
| 1098807 | | **731736** |
| 1098808 | | **731734** |
| 1098809 | | **731735** |
| 1103120 | | **734292** |
| 1104319 | | **734293** |
| 1104320 | | **734292** |
| 1105821 | | **734293** |
| 1106758 | | **730589** |
| 1107118 | | **730483** |
| 1107126 | | **696149** |
| 1108838 | | **818004** |
| 1108999 | | **732786** |
| 1109113 | | **732790** |
| 1109138 | | **817936** |
| 1109232 | | **732791** |
| 1109257 | | **732790** |
| 1111384 | | **731735** |
| 1113204 | | **734292** |
| 1113206 | | **734292** |
| 1114283 | | **812275** |
| 1115769 | | **734288** |
| 1115771 | | **734287** |
| 1118161 | | **696158** |

| OE | PROD | Valeo |
|---|---|---|
| **FORD(.../...)** | | |
| 1124704 | | **817238** |
| 1124902 | | **734286** |
| 1132655 | | **732732** |
| 1132658 | | **732731** |
| 1132690 | | **734292** |
| 1132691 | | **734292** |
| 1141490 | | **734273** |
| 1141491 | | **734274** |
| 1141507 | | **696276** |
| 1142333 | | **817567** |
| 1142808 | | **734286** |
| 1142810 | | **734287** |
| 1142812 | | **734288** |
| 1145420 | | **696277** |
| 1146195 | | **817664** |
| 1152149 | | **734274** |
| 1152429 | | **817657** |
| 1152920 | | **696362** |
| 1206550 | | **734272** |
| 1206926 | | **812320** |
| 1209590 | | **735372** |
| 1213022 | | **732962** |
| 1214085 | | **734274** |
| 1214784 | | **734272** |
| 1214785 | | **734273** |
| 1216262 | | **734696** |
| 1216264 | | **734699** |
| 1221061 | | **735478** |
| 1221705 | | **734274** |
| 1222562 | | **734273** |
| 1227171 | | **817888** |
| 1230987 | | **734321** |
| 1231015 | | **818717** |
| 1231795 | | **734392** |
| 1232914 | | **817567** |
| 1232915 | | **817657** |
| 1233381 | | **817753** |
| 1234248 | | **818046** |
| 1250627 | | **817493** |
| 1253753 | | **818004** |
| 1254203 | | **817664** |
| 1305491 | | **734319** |
| 1305492 | | **734320** |
| 1311098 | | **817657** |
| 1315633 | | **734699** |
| 1316496 | | **818717** |
| 1317081 | | **812367** |
| 1319971 | | **696276** |
| 1319972 | | **696276** |
| 1320515 | | **734696** |
| 1323756 | | **734321** |
| 1325830 | | **734274** |
| 1325831 | | **734273** |
| 1325832 | | **734272** |
| 1331402 | | **696363** |
| 1334196 | | **818194** |
| 1334653 | | **818194** |
| 1335552 | | **818046** |
| 1337582 | | **696277** |
| 1337585 | | **696278** |
| 1337624 | | **818797** |

| OE | PROD | Valeo |
|---|---|---|
| **FORD(.../...)** | | |
| 1348012 | | **817657** |
| 1350152 | | **735048** |
| 1353523 | | **818717** |
| 1354176 | | **734319** |
| 1354177 | | **734320** |
| 1354178 | | **734321** |
| 1357325 | | **734321** |
| 1359798 | | **734274** |
| 1363013 | | **735045** |
| 1363775 | | **818195** |
| 1365996 | | **735167** |
| 1366100 | | **696276** |
| 1374177 | | **734320** |
| 1374402 | | **734321** |
| 1377541 | | **735600** |
| 1383318 | | **814087** |
| 1384859 | | **814083** |
| 1417980 | | **819151** |
| 1421281 | | **818717** |
| 1429405 | | **818246** |
| 1429406 | | **818239** |
| 1433631 | | **818240** |
| 1437112 | | **814184** |
| 1493771 | | **735376** |
| 1493773 | | **735373** |
| 1493774 | | **735374** |
| 1522067 | | **814185** |
| 1541277 | | **696345** |
| 1557572 | | **696344** |
| 1557574 | | **696346** |
| 1575611 | | **819320** |
| 1587929 | | **730110** |
| 1590322 | | **819320** |
| 1590323 | | **819320** |
| 1619143 | | **883956** |
| 1643536 | | **730117** |
| 1643537 | | **730117** |
| 1644977 | | **730589** |
| 1647740 | | **730968** |
| 1652127 | | **812129** |
| 1654011 | | **730590** |
| 1654321 | | **730483** |
| 1659344 | | **731786** |
| 1664633 | | **730856** |
| 1671390 | | **735378** |
| 1671561 | | **735379** |
| 1674066 | | **818245** |
| 1722905 | | **818241** |
| 1953239 | | **732592** |
| 1958982 | | **731785** |
| 1C159L440BB | | **817891** |
| 1C159L440BD | | **817891** |
| 1C159L440BE | | **817891** |
| 1C1H8005FD | | **734291** |
| 1C1H8005FE | | **734291** |
| 1C1H8005GB | | **734293** |
| 1C1H8005GC | | **734293** |
| 1C1H8005GD | | **734293** |
| 1C1H8005GE | | **734293** |
| 1C1H8005JA | | **734291** |
| 1C1H8005JB | | **734291** |

| OE | PROD | Valeo |
|---|---|---|
| **FORD(.../...)** | | |
| 1C1H8005JC | | **734291** |
| 1C1H8005JD | | **734291** |
| 1C1H8005JE | | **734291** |
| 1S5H8005BA | | **734392** |
| 1S7E18476AA | | **812275** |
| 1S7H19710AE | | **817567** |
| 1S7H19710BB | | **817657** |
| 2C119L440BA | | **818802** |
| 2C119L440BB | | **818802** |
| 2S6H18B539AB | | **812320** |
| 2S6H19710AC | | **817664** |
| 2S6H19710AD | | **818195** |
| 2S6H19710AD | | **814083** |
| 2S6H8005AA | | **734274** |
| 2S6H8005AB | | **734274** |
| 2S6H8005AC | | **734274** |
| 2S6H8005AD | | **734274** |
| 2S6H8005BB | | **734272** |
| 2S6H8005CA | | **734273** |
| 2S6H8005CB | | **734273** |
| 2S6H8005CC | | **734273** |
| 2S6H8C607BA | | **696277** |
| 2S6H8C607BD | | **696277** |
| 2S6H8C607EB | | **696276** |
| 2S6H8C807DA | | **696276** |
| 2S718005AC | | **734699** |
| 2S718005AD | | **734699** |
| 2S718005CB | | **734696** |
| 2S718005CC | | **734696** |
| 2S718005DC | | **735048** |
| 2T148005AD | | **735043** |
| 2T148005CC | | **735043** |
| 2T148005FB | | **735167** |
| 3016497 | | **812275** |
| 3396901 | | **731073** |
| 3M5H19710AB | | **818046** |
| 3M5H19710CA | | **818046** |
| 3M5H8005PG | | **734319** |
| 3M5H8005PH | | **734319** |
| 3M5H8005PJ | | **734319** |
| 3M5H8005PK | | **734319** |
| 3M5H8005RG | | **734320** |
| 3M5H8005RH | | **734320** |
| 3M5H8005RJ | | **734320** |
| 3M5H8005RK | | **734320** |
| 3M5H8005TE | | **734321** |
| 3M5H8005TF | | **734321** |
| 3M5H8005TG | | **734321** |
| 3M5H8005TH | | **734321** |
| 3M5H8005TJ | | **734321** |
| 3M5H8005TK | | **734321** |
| 3M5H8005TL | | **734321** |
| 3M5H8005TM | | **734321** |
| 3M5H9L440AC | | **818717** |
| 3M5H9L440AD | | **818717** |
| 3M5H9L440AE | | **818717** |
| 3M5Q9F464AA | | **817753** |
| 4041973 | | **818050** |
| 4042575 | | **812332** |
| 4104714 | | **734291** |
| 4106727 | | **734468** |

| OE | PROD | Valeo |
|---|---|---|
| **FORD(.../...)** | | |
| 4126928 | | **817891** |
| 4135737 | | **734468** |
| 4144369 | | **817232** |
| 4156969 | | **734291** |
| 4164696 | | **818225** |
| 4166487 | | **812364** |
| 4323785 | | **734293** |
| 4331444 | | **734291** |
| 4331449 | | **734293** |
| 4367089 | | **735043** |
| 4367092 | | **735043** |
| 4397252 | | **817891** |
| 4401912 | | **818800** |
| 4432117 | | **818802** |
| 4471423 | | **818050** |
| 4480903 | | **734292** |
| 4484464 | | **734293** |
| 4493553 | | **734291** |
| 4522532 | | **818800** |
| 4522846 | | **818802** |
| 4522847 | | **817891** |
| 4571640 | | **735167** |
| 4572061 | | **734292** |
| 4596701 | | **734293** |
| 4596740 | | **734291** |
| 4L848005LA | | **734468** |
| 4M5H9L440LA | | **818717** |
| 4S6H8005CA | | **734274** |
| 4S6H8005DA | | **734273** |
| 4S6H8005EA | | **734272** |
| 4S6H8005FA | | **734274** |
| 4T168005GA | | **735167** |
| 5S6H19710AB | | **818194** |
| 5S6H8005CE | | **735045** |
| 5S6H9L440AD | | **818797** |
| 6041022 | | **819320** |
| 6065788 | | **819320** |
| 6078971 | | **819240** |
| 6084481 | | **730110** |
| 6103119 | | **883954** |
| 6114258 | | **812053** |
| 6122462 | | **883954** |
| 6134546 | | **883956** |
| 6138596 | | **811047** |
| 6138598 | | **811046** |
| 6138599 | | **811046** |
| 6138600 | | **811047** |
| 6148704 | | **731594** |
| 6154176 | | **730116** |
| 6160271 | | **819176** |
| 6160274 | | **730124** |
| 6160667 | | **730116** |
| 6165323 | | **730563** |
| 6165438 | | **730968** |
| 6176237 | | **730483** |
| 6176238 | | **730484** |
| 6176984 | | **730484** |
| 6183117 | | **812058** |
| 6184413 | | **730117** |
| 6184416 | | **730563** |
| 6184693 | | **819176** |

| OE | PROD | Valeo |
|---|---|---|
| **FORD(.../...)** | | |
| 6186886 | | **730590** |
| 6479789 | | **730484** |
| 6479790 | | **730484** |
| 6525326 | | **731595** |
| 6525327 | | **731595** |
| 6562898 | | **730857** |
| 6562903 | | **730857** |
| 6562908 | | **731300** |
| 6616483 | | **730856** |
| 6616487 | | **730856** |
| 6632235 | | **731299** |
| 6632236 | | **730484** |
| 6640239 | | **819176** |
| 6640240 | | **731492** |
| 6640241 | | **730124** |
| 6770850 | | **731299** |
| 6775553 | | **812057** |
| 6791562 | | **730484** |
| 6792788 | | **731300** |
| 6899900 | | **731011** |
| 6899901 | | **731257** |
| 6899903 | | **731550** |
| 6912232 | | **730857** |
| 6912233 | | **730856** |
| 6912234 | | **730856** |
| 6912237 | | **730856** |
| 6912239 | | **731300** |
| 6912241 | | **731492** |
| 6C1119710AC | | **814087** |
| 7110379 | | **812276** |
| 7121563 | | **812277** |
| 7138206 | | **730124** |
| 7138208 | | **730124** |
| 7138824 | | **730484** |
| 7138825 | | **731299** |
| 7139160 | | **730563** |
| 7204831 | | **812361** |
| 7215751 | | **731257** |
| 7223405 | | **696041** |
| 7242483 | | **734862** |
| 7242485 | | **731782** |
| 7242486 | | **731779** |
| 7258107 | | **731386** |
| 7258108 | | **731387** |
| 7258109 | | **731385** |
| 7286932 | | **814289** |
| 7291900 | | **812324** |
| 7358424 | | **731011** |
| 7358425 | | **731550** |
| 7404754 | | **734428** |
| 8V6119710FA | | **814197** |
| 84FG18B539BA | | **812053** |
| 85GG18B539CB | | **812129** |
| 86AB8005CE | | **730117** |
| 86AB8005HA | | **730117** |
| 86GB8005AC | | **730563** |
| 86VB8005BB | | **730124** |
| 88AB8005DA | | **731595** |
| 88AB8005JA | | **731595** |
| 89FB8005AH | | **730483** |
| 89FB8005DC | | **730484** |

| OE | PROD | Valeo |
|---|---|---|
| **FORD(.../...)** | | |
| 89FB8005FH | | **730484** |
| 89FG18B539AB | | **812057** |
| 91AG18B539AA | | **812058** |
| 92AB8005BC | | **731300** |
| 92AB8005CB | | **730857** |
| 92AB8005CC | | **730857** |
| 92AB8005EB | | **730856** |
| 92AB8005ED | | **730856** |
| 92AB8005FA | | **730856** |
| 92AB8005FB | | **730856** |
| 92AB8005FC | | **730856** |
| 92AB8005FD | | **730856** |
| 92AB8005SD | | **730856** |
| 92AB8005YC | | **731300** |
| 92FB8005LA | | **730484** |
| 92FB8005LB | | **730484** |
| 92VB8005BC | | **730124** |
| 92VB8005BD | | **730124** |
| 92VB8005CC | | **731492** |
| 92VB8005CD | | **731492** |
| 92VB8005EC | | **730124** |
| 92VB8005FC | | **730124** |
| 93BB8005AD | | **731257** |
| 93BB8005AD | | **731550** |
| 93BB8005AE | | **731550** |
| 93BB8005CD | | **731257** |
| 93BB8005DD | | **731550** |
| 93BB8005ED | | **731550** |
| 93BB8005EE | | **731550** |
| 94FB8005AB | | **734862** |
| 94VB8005GC | | **731782** |
| 95GB8005CA | | **730563** |
| 95NW18B539AB | | **812324** |
| 95NW18B539RA | | **812361** |
| 95NW19710AE | | **816948** |
| 95VW8005AB | | **731386** |
| 95VW8005CA | | **731385** |
| 96FB8005EB | | **731736** |
| 96FW18B539AD | | **812272** |
| 97BW19710AE | | **817232** |
| 97KW19710AB | | **817225** |
| 98AB8005DD | | **732732** |
| 98AB8005DE | | **732732** |
| 98AB8005DF | | **732732** |
| 98AB8005JB | | **732731** |
| 98AB8005JC | | **732731** |
| 98AB805JD | | **732731** |
| XS4Q9L440BD | | **817888** |
| XS4Q9L440CA | | **817888** |
| XS6H8005EA | | **731735** |
| XS6H8005EB | | **731735** |
| XS6H8005FA | | **731617** |
| XS6H8005GA | | **731736** |
| XS7H8005EC | | **734288** |
| XS7H8005ED | | **734288** |
| XS7H8005HA | | **731550** |
| YC159L440BE | | **818800** |
| YC159L440BF | | **818800** |
| YC159L440CA | | **818225** |
| YC1H19710BA | | **818050** |
| YC1H8005BB | | **734293** |

| OE | PROD | Valeo |
|---|---|---|
| **FORD(.../...)** | | |
| YC1H8005BC | | 734293 |
| YC1H8005BD | | 734293 |
| YC1H8005BE | | 734293 |
| YC1H8005CB | | 734292 |
| YC1H8005CC | | 734292 |
| YC1H8005CD | | 734292 |
| YC1H8005CE | | 734292 |
| YC1H8005CF | | 734292 |
| YC1H8005DB | | 734292 |
| YC1H8005DC | | 734292 |
| YC1H8005DD | | 734292 |
| YC1H8005DE | | 734292 |
| YC1H8005DF | | 734292 |
| YC1H8005DG | | 734292 |
| YL848005HBA | | 734468 |
| YL8H8005LB | | 734468 |
| YL8H8005LC | | 734468 |
| YL8H800LA | | 734468 |
| YM2H19C600AA | | 818004 |
| YS4H19710CA | | 817493 |
| YS4H8C607AA | | 696149 |
| **HONDA** | | |
| 19010692903 | | 731434 |
| 19010P01003 | | 731434 |
| 19010P01004 | | 731434 |
| 19010P01013 | | 731434 |
| 19010P01014 | | 731434 |
| 19010P03305 | | 731434 |
| 19010P03901 | | 731458 |
| 19010P03903 | | 731458 |
| 19010P04G01 | | 731434 |
| 19010P07024 | | 731434 |
| 19010P08003 | | 731434 |
| 19010P08004 | | 731434 |
| 19010P08013 | | 731434 |
| 19010P08014 | | 731434 |
| 19010P0A902 | | 734109 |
| 19010P0DJ51 | | 734109 |
| 19010P0FJ01 | | 731471 |
| 19010P0FJ02 | | 731471 |
| 19010P0FJ51 | | 734109 |
| 19010P0HA51 | | 734109 |
| 19010P14A01 | | 734624 |
| 19010P14A02 | | 734624 |
| 19010P1EA51 | | 734112 |
| 19010P1EE51 | | 734747 |
| 19010P1KE01 | | 731434 |
| 19010P1KE51 | | 731458 |
| 19010P28A01 | | 731434 |
| 19010P28A02 | | 731434 |
| 19010P28A03 | | 731434 |
| 19010P28A04 | | 731434 |
| 19010P28G51 | | 731459 |
| 19010P28G52 | | 731459 |
| 19010P29J02 | | 731434 |
| 19010P29J03 | | 731434 |
| 19010P29J04 | | 731434 |
| 19010P2FA51 | | 731474 |
| 19010P2J003 | | 731434 |
| 19010P2J004 | | 731434 |
| 19010P2J013 | | 731434 |

| OE | PROD | Valeo |
|---|---|---|
| **HONDA(.../...)** | | |
| 19010P2J902 | | 731459 |
| 19010P2TG01 | | 731469 |
| 19010P30901 | | 731474 |
| 19010P30G01 | | 731469 |
| 19010P30G02 | | 731469 |
| 19010P30G03 | | 731469 |
| 19010P3F901 | | 734110 |
| 19010P3F902 | | 734110 |
| 19010P44G01 | | 731471 |
| 19010P45505 | | 731076 |
| 19010P45G01 | | 731471 |
| 19010P45G51 | | 734109 |
| 19010PAAA01 | | 734114 |
| 19010PAAA02 | | 734114 |
| 19010PDAE01 | | 734716 |
| 19010PDAE51 | | 734717 |
| 19010PE0013 | | 730168 |
| 19010PE0023 | | 730168 |
| 19010PE0033 | | 730168 |
| 19010PE033 | | 730168 |
| 19010PE1004 | | 730316 |
| 19010PE1013 | | 730316 |
| 19010PE1014 | | 730316 |
| 19010PE1666 | | 730316 |
| 19010PEA901 | | 734112 |
| 19010PEL003 | | 734117 |
| 19010PFTE00 | | 734290 |
| 19010PG6003 | | 731467 |
| 19010PG6013 | | 731467 |
| 19010PG6014 | | 731467 |
| 19010PG6024 | | 731467 |
| 19010PG7013 | | 731467 |
| 19010PG7305 | | 731467 |
| 19010PH1621 | | 730423 |
| 19010PH1622 | | 730423 |
| 19010PH1631 | | 730424 |
| 19010PH1632 | | 730424 |
| 19010PH1633 | | 730424 |
| 19010PH1634 | | 730424 |
| 19010PH1635 | | 730423 |
| 19010PH1636 | | 730424 |
| 19010PH2901 | | 730424 |
| 19010PH4671 | | 730424 |
| 19010PH4A02 | | 730424 |
| 19010PH4A11 | | 730424 |
| 19010PH4A12 | | 730424 |
| 19010PK1004 | | 730430 |
| 19010PK1023 | | 730430 |
| 19010PK1024 | | 730430 |
| 19010PK1305 | | 730430 |
| 19010PK1662 | | 730430 |
| 19010PK1671 | | 730429 |
| 19010PK1673 | | 730429 |
| 19010PK1674 | | 730429 |
| 19010PK1675 | | 730429 |
| 19010PK1676 | | 730429 |
| 19010PK1677 | | 730429 |
| 19010PK1678 | | 730429 |
| 19010PK1A51 | | 730429 |
| 19010PK1A52 | | 730429 |
| 19010PK2622 | | 730430 |

| OE | PROD | Valeo |
|---|---|---|
| **HONDA(.../...)** | | |
| 19010PK2623 | | 730430 |
| 19010PK2624 | | 730430 |
| 19010PK2661 | | 730430 |
| 19010PK2662 | | 730430 |
| 19010PK2663 | | 730430 |
| 19010PK2752 | | 730430 |
| 19010PK3A51 | | 730429 |
| 19010PK3A52 | | 730429 |
| 19010PK3A53 | | 730429 |
| 19010PK3A54 | | 730429 |
| 19010PLCJ51 | | 734723 |
| 19010PM1902 | | 731635 |
| 19010PM1J01 | | 731635 |
| 19010PM1J02 | | 730430 |
| 19010PM2G51 | | 731635 |
| 19010PM3003 | | 731634 |
| 19010PM3004 | | 731634 |
| 19010PM3305 | | 819193 |
| 19010PM3901 | | 730417 |
| 19010PM4004 | | 819193 |
| 19010PM5305 | | 731635 |
| 19010PM5405 | | 731635 |
| 19010PM5R02 | | 731635 |
| 19010PM5R52 | | 731635 |
| 19010PM8A02 | | 731634 |
| 19010PMAE61 | | 734702 |
| 19010PMMA02 | | 734723 |
| 19010PMMA52 | | 734723 |
| 19010PN7750 | | 730591 |
| 19010PN7760 | | 730970 |
| 19010PN7761 | | 730970 |
| 19010PN7762 | | 730970 |
| 19010PNAG51 | | 734478 |
| 19010PNLG01 | | 734476 |
| 19010PNLG51 | | 734477 |
| 19010PT0003 | | 731076 |
| 19010PT0013 | | 731076 |
| 19010PT0J03 | | 731076 |
| 19010PT1003 | | 732323 |
| 19010PT1004 | | 732323 |
| 19010PT1902 | | 731100 |
| 19010PT1904 | | 731100 |
| 19010PT4G51 | | 731100 |
| 19010PT4G52 | | 731100 |
| 19010PT4G53 | | 731100 |
| 19010PT4G54 | | 731100 |
| 19010PT4G55 | | 731100 |
| 19010PT4G56 | | 731100 |
| 19010PW0004 | | 734623 |
| 19010PW0014 | | 734623 |
| 19010PW0G02 | | 734623 |
| 19010PWAG01 | | 734218 |
| 19010PY3901 | | 731629 |
| 19010PY3902 | | 731629 |
| 19010PY3A01 | | 731630 |
| 19010PY3A02 | | 731630 |
| 19010RBA901 | | 735050 |
| 19010RBAE01 | | 734703 |
| 19010RBBE51 | | 735049 |
| 19010RNAA01 | | 735238 |
| 19010RSAG01 | | 735243 |

| OE | PROD | Valeo |
|---|---|---|
| **HONDA(.../...)** | | |
| 19010RSHE01 | | 735241 |
| 19010RSRE01 | | 735242 |
| 19010SK4E00 | | 730565 |
| 80100S7A013 | | 814267 |
| 80100S84A00 | | 817783 |
| 80100SM1A23 | | 814276 |
| 80100SN7E01 | | 817781 |
| 80101SEFE11 | | 814159 |
| 80110S10003 | | 818070 |
| 80110S5A003 | | 814243 |
| 80110S6DG01 | | 817780 |
| 80110S9A003 | | 814225 |
| 80110SAA003 | | 814241 |
| 80110SEA003 | | 814242 |
| 80110SNBA41 | | 814217 |
| 80110SV1A11 | | 814302 |
| 80110SWAA01 | | 814232 |
| **HYUNDAI** | | |
| 2531002100 | | 734255 |
| 2531002150 | | 734254 |
| 2531002151 | | 734254 |
| 2531005500 | | 735562 |
| 2531017100 | | 735606 |
| 253101E001 | | 735586 |
| 2531022025 | | 732488 |
| 2531024000 | | 734267 |
| 2531024001 | | 734267 |
| 2531024002 | | 734267 |
| 2531024100 | | 734267 |
| 2531025050 | | 734266 |
| 2531025100 | | 734253 |
| 2531025152 | | 734960 |
| 2531025810 | | 735589 |
| 2531026000 | | 734259 |
| 2531026070 | | 734909 |
| 2531026410 | | 734905 |
| 2531028000 | | 734256 |
| 2531028050 | | 734256 |
| 2531029000 | | 734950 |
| 2531029010 | | 734950 |
| 2531029700 | | 734258 |
| 2531029750 | | 734258 |
| 253102D100 | | 734903 |
| 253102D110 | | 734965 |
| 253102H000 | | 735564 |
| 2531034000 | | 732487 |
| 2531034050 | | 734261 |
| 2531038050 | | 734949 |
| 253104A000 | | 734408 |
| 253104A100 | | 734408 |
| 9712302000 | | 812396 |
| 9722122000 | | 812409 |
| 9722122001 | | 812409 |
| 9760622051 | | 814255 |
| 976062D000 | | 814264 |
| **INNOCENTI => FIAT GROUP.** | | |
| **IVECO** | | |
| 1907918 | | 816647 |

| OE | PROD | Valeo |
|---|---|---|
| **IVECO(.../...)** | | |
| 500344178 | | 812341 |
| 500396428 | | 734230 |
| 504008110 | | 734231 |
| 504022601 | | 818037 |
| 504022617 | | 818724 |
| 504026720 | | 812340 |
| 504045487 | | 734449 |
| 504045489 | | 734448 |
| 504084140 | | 818724 |
| 504084141 | | 734448 |
| 504086501 | | 818724 |
| 8588574 | | 811348 |
| 93807442 | | 883787 |
| 93807662 | | 811348 |
| 93807802 | | 883787 |
| 93808688 | | 816646 |
| 93809326 | | 816647 |
| 93813747 | | 730334 |
| 93814567 | | 816647 |
| 93817393 | | 817941 |
| 93822906 | | 816649 |
| 93822907 | | 817941 |
| 93824070 | | 731572 |
| 93825378 | | 731572 |
| 93930678 | | 812342 |
| 99487925 | | 818724 |
| 99487944 | | 818036 |
| 99488591 | | 734231 |
| **IVECO TRUCKS** | | |
| 41214450 | | 818985 |
| 504080822 | | 818116 |
| 8189330 | | 818038 |
| 93156374 | | 812047 |
| 93158460 | | 812075 |
| 98418409 | | 812132 |
| 98430072 | | 812133 |
| **JAGUAR** | | |
| C2S1231 | | 734785 |
| C2S31605 | | 814199 |
| C2S5302 | | 818023 |
| JLM11343 | | 812072 |
| **JEEP** | | |
| 52028115 | | 732552 |
| 52028133 | | 732552 |
| 52028379 | | 732713 |
| 52029046 | | 732552 |
| 52029100 | | 732312 |
| 52030000 | | 732552 |
| 52079597AB | | 732782 |
| 52079729AC | | 735221 |
| 52079883AB | | 735051 |
| 52080118AA | | 735351 |
| 52080123AA | | 735222 |
| 55036473 | | 818024 |
| 55037654AB | | 735196 |
| 55115863 | | 817022 |
| 55115864 | | 817023 |
| 55115918AB | | 817288 |
| 55115918AC | | 817288 |

| OE | PROD | Valeo |
|---|---|---|
| **KIA** | | |
| 0K01161480C | | 814250 |
| 0K01215200 | | 734788 |
| 0K20115200B | | 734264 |
| 0K2A215200B | | 734265 |
| 0K30A15200D | | 735077 |
| 0K30A15200E | | 735077 |
| 0K30C15200B | | 734263 |
| 0K30C61A10 | | 812410 |
| 0K31A15200A | | 735078 |
| 0K55261H01 | | 812411 |
| 0K55261H01A | | 812412 |
| 0K55261460D | | 814270 |
| 0K60A15200C | | 734990 |
| 0K62Z15200B | | 734990 |
| 0K62Z15200C | | 734990 |
| 0K72A15200 | | 734953 |
| KK13915200 | | 735079 |
| KK15015200 | | 735079 |
| KK15015200A | | 735079 |
| KK33115200 | | 734262 |
| KK37015200 | | 735076 |
| KK37015200A | | 735076 |
| 253102E100 | | 735563 |
| 2531038050 | | 734949 |
| **LADA** | | |
| 21081301010 | | 730317 |
| 21081301012 | | 730317 |
| 212151301012 | | 730634 |
| SD210801301012 | | 731498 |
| **LANCIA => FIAT GROUP.** | | |
| **LAND ROVER** | | |
| AWR5796 | | 817067 |
| BTP1823 | | 731406 |
| ESR204 | | 734734 |
| ESR2269 | | 732402 |
| ESR3275 | | 731491 |
| ESR4197 | | 732399 |
| ESR4199 | | 732400 |
| ESR76 | | 731235 |
| FTP8030 | | 818826 |
| JEF100150 | | 812268 |
| JRB100790 | | 818025 |
| JRB101070 | | 817549 |
| JRW000020 | | 814165 |
| LR006715 | | 735600 |
| LR009802 | | 818249 |
| NRC6889 | | 731235 |
| **LEXUS** | | |
| 1604120352 | | 735571 |
| 1640070620 | | 734499 |
| 1640070630 | | 734498 |
| 8846050120 | | 814310 |
| 8846053030 | | 814226 |
| **MAN** | | |
| 81619010064 | | 812351 |
| 81619010065 | | 812346 |
| 81619010067 | | 812350 |

| OE | PROD | Valeo |
|---|---|---|
| **MAN(.../...)** | | |
| 81619016166 | | 812352 |
| 81619200011 | | 818043 |
| 81619200012 | | 818040 |
| 81619200018 | | 818033 |
| 81619206011 | | 818041 |
| 81619206018 | | 818042 |
| 81619206026 | | 818044 |
| **MAZDA** | | |
| 1E0315200 | | 731617 |
| 1E0315200A | | 731617 |
| 1E0415200 | | 731734 |
| 1E0515200 | | 731736 |
| 1E0515200A | | 731736 |
| 1E0715200 | | 732003 |
| 1E1015200 | | 731735 |
| 1E1015200A | | 731735 |
| 1E1015200B | | 731735 |
| 1E1215200 | | 732003 |
| 1E1615200 | | 732003 |
| 1E1615200A | | 732003 |
| AJ0315200 | | 734468 |
| B01A61480 | | 818084 |
| B01W61480F | | 814253 |
| B10215200 | | 731042 |
| B25F61480B | | 818087 |
| B31615200 | | 730437 |
| B3C715200C | | 731036 |
| B3C715200D | | 731036 |
| B3C815200D | | 734121 |
| B3C815200F | | 734121 |
| B54715200A | | 732475 |
| B54715200C | | 732475 |
| B54715200D | | 732475 |
| B55715200B | | 732326 |
| B55715200C | | 732326 |
| B59615200D | | 732345 |
| B5C715200A | | 732726 |
| B61S15200A | | 731461 |
| B61S15200B | | 731461 |
| B61S15200C | | 731461 |
| B61S15200D | | 731461 |
| B63115200A | | 731142 |
| B63F15200 | | 731072 |
| B63F15200A | | 731072 |
| B63F15200B | | 731072 |
| B63F15200C | | 731072 |
| B63F15200D | | 731072 |
| B6BF15200G | | 734120 |
| B6BG15200F | | 732345 |
| B6FN15200 | | 732345 |
| B6S715200C | | 732325 |
| B6S715200D | | 732325 |
| BB7C61480 | | 814281 |
| BC1M61480A | | 814257 |
| BJ3A61480C | | 818088 |
| BK2K61480B | | 818086 |
| BP2815200 | | 732326 |
| BP2815200A | | 732326 |
| BP2815200B | | 732326 |
| BP2815200C | | 732326 |
| BP4K61480B | | 814265 |

| OE | PROD | Valeo |
|---|---|---|
| **MAZDA(.../...)** | | |
| BP4W15200A | | 734119 |
| BPD315200H | | 734120 |
| BPE715200 | | 732346 |
| BPE815200 | | 731437 |
| BPG215200 | | 735236 |
| BPM715200 | | 735236 |
| BPYK6148ZA | | 814216 |
| BR7061480 | | 814278 |
| C10061480 | | 818092 |
| C20115200 | | 734273 |
| C40115200 | | 734273 |
| CB0561480B | | 814316 |
| D20161480B | | 814258 |
| DE9461480B | | 818195 |
| EH4461480A | | 814235 |
| E35615200A | | 730436 |
| E35815200B | | 730436 |
| E36015200A | | 730436 |
| E5D915200B | | 730436 |
| F15161480 | | 814215 |
| F25215200 | | 732538 |
| F2H115200 | | 730440 |
| F2H215200 | | 734581 |
| F2J215200 | | 732538 |
| F8C115200 | | 730440 |
| F8C715200 | | 730440 |
| FE4515200 | | 732538 |
| FE4J15200 | | 732538 |
| FE4K15200A | | 731139 |
| FE5A15200 | | 732538 |
| FEAM15200 | | 732538 |
| FEDG15200 | | 732538 |
| FP8515200A | | 734126 |
| FS1915200E | | 731073 |
| FS1915200F | | 731073 |
| FS2015200F | | 731372 |
| FS2015200H | | 731372 |
| FS7P15200A | | 735240 |
| FS7P15200B | | 735240 |
| FS8M15200A | | 735240 |
| FSJ215200 | | 731372 |
| FSJ315200A | | 731073 |
| GA5R61480A | | 814251 |
| GA7H61480 | | 814254 |
| GE4T61480B | | 818085 |
| GJ5161480B | | 814274 |
| GJYA6148ZA | | 818090 |
| JE9815200C | | 734118 |
| JEA315200B | | 734207 |
| K81715200C | | 731466 |
| KL1915200F | | 731466 |
| KL2015200G | | 731472 |
| L32715200 | | 734484 |
| L33L15200 | | 735577 |
| LD4761480 | | 814266 |
| LD4761480A | | 814239 |
| LF1715200 | | 735053 |
| LF2115200 | | 734483 |
| LFB715200A | | 734320 |
| NE5161480C | | 814227 |
| RF1S15200A | | 734122 |

| OE | PROD | Valeo |
|---|---|---|
| **MAZDA(.../...)** | | |
| RF1S15200B | | 734122 |
| RF2L15200B | | 734122 |
| RF2L15200C | | 734122 |
| RF5C15200 | | 734410 |
| RF7N15200 | | 734320 |
| RFG215200B | | 731417 |
| WL1115200B | | 734118 |
| Y40115200 | | 734274 |
| Y40215200 | | 734274 |
| Y60115200B | | 734321 |
| Y60115200C | | 734321 |
| Y60115200D | | 734321 |
| Y60115200E | | 734321 |
| Z50615200A | | 732345 |
| Z60215200C | | 734320 |
| Z60315200 | | 734320 |
| ZJ3815200A | | 735416 |
| ZL0115200A | | 734123 |
| ZL0115200C | | 734123 |
| ZL0215200 | | 734124 |
| ZL0515200 | | 734123 |
| ZL0515200B | | 734123 |
| ZM4015200 | | 735240 |
| ZM4415200 | | 735240 |
| **MCC** | | |
| 00003007V003000000 | | 817931 |
| 00003007V004000000 | | 817931 |
| 00003007V005000000 | | 817931 |
| 0001632V003000000 | | 817801 |
| 0002490V007000000 | | 818730 |
| 0003428V006000000 | | 734848 |
| 0010033V003000000 | | 735054 |
| 4545001103 | | 735056 |
| 4545001503 | | 735055 |
| **MERCEDES** | | |
| 0008356601 | | 812353 |
| 0015001293 | | 696062 |
| 0015001393 | | 696063 |
| 0018358301 | | 812348 |
| 0018359201 | | 812347 |
| 0028350801 | | 812356 |
| 0028350901 | | 812357 |
| 0028353101 | | 812299 |
| 0028355401 | | 812084 |
| 0028355501 | | 812304 |
| 0028356801 | | 812354 |
| 0038350001 | | 812134 |
| 0038353501 | | 812251 |
| 1245000302 | | 732458 |
| 1245000403 | | 883860 |
| 1245001402 | | 732458 |
| 1245002002 | | 732591 |
| 1245002203 | | 819387 |
| 1245002403 | | 819376 |
| 1245002803 | | 819377 |
| 1245004403 | | 819387 |
| 1245004903 | | 883860 |
| 1245005103 | | 732458 |
| 1245006203 | | 732460 |
| 1245006303 | | 732460 |

| OE | PROD | Valeo |
|---|---|---|
| **MERCEDES(.../...)** | | |
| 1245007803 | | 732591 |
| 1245009003 | | 819377 |
| 1245009803 | | 819387 |
| 1265000903 | | 819379 |
| 1265003503 | | 819379 |
| 1265013303 | | 819378 |
| 1295000703 | | 732454 |
| 1295001003 | | 734798 |
| 1405000403 | | 734793 |
| 1405002103 | | 734631 |
| 1405002303 | | 732447 |
| 1635000103 | | 732736 |
| 1635000303 | | 732706 |
| 1635000404 | | 732315 |
| 1635002204 | | 732315 |
| 1638300170 | | 817458 |
| 1638300370 | | 817446 |
| 1685000000 | | 817759 |
| 1685000002 | | 732588 |
| 1685000202 | | 732587 |
| 1685000293 | | 696129 |
| 1685000302 | | 732587 |
| 1685000354 | | 817504 |
| 1685000454 | | 817504 |
| 1685000593 | | 696130 |
| 1685000602 | | 732587 |
| 1685000854 | | 817659 |
| 1685001154 | | 817659 |
| 1685001602 | | 732897 |
| 1695000000 | | 818806 |
| 1695000003 | | 734378 |
| 1695000403 | | 734379 |
| 1698300761 | | 818205 |
| 1715000003 | | 734318 |
| 1715000154 | | 814186 |
| 2015000503 | | 819368 |
| 2015001103 | | 730344 |
| 2015001203 | | 730344 |
| 2015001903 | | 883876 |
| 2015002203 | | 730344 |
| 2015002903 | | 819201 |
| 2015003503 | | 730344 |
| 2015004003 | | 819368 |
| 2015004303 | | 730344 |
| 2015004603 | | 819368 |
| 2015005303 | | 819383 |
| 2015008103 | | 730344 |
| 2015009103 | | 732090 |
| 2018300370 | | 816949 |
| 2025002203 | | 731805 |
| 2025002603 | | 731804 |
| 2025003203 | | 731808 |
| 2025004103 | | 732450 |
| 2025005103 | | 732451 |
| 2025005203 | | 732451 |
| 2025006103 | | 731804 |
| 2028300770 | | 817492 |
| 2028300870 | | 816900 |
| 2028300970 | | 817562 |
| 2028301070 | | 817563 |
| 2035000000 | | 817760 |

| OE | PROD | Valeo |
|---|---|---|
| **MERCEDES(.../...)** | | |
| 2035000100 | | 735479 |
| 2035000303 | | 732741 |
| 2035000503 | | 732741 |
| 2035000554 | | 817848 |
| 2035000603 | | 732740 |
| 2035000654 | | 817849 |
| 2035000703 | | 732743 |
| 2035000803 | | 732742 |
| 2035001003 | | 732741 |
| 2035001054 | | 817849 |
| 2035001103 | | 732740 |
| 2035001154 | | 817849 |
| 2035001354 | | 817849 |
| 2035002003 | | 734941 |
| 2035002303 | | 732900 |
| 2035002503 | | 732743 |
| 2035003403 | | 732741 |
| 2035003903 | | 732743 |
| 2035004503 | | 735144 |
| 2038300161 | | 812321 |
| 2045000203 | | 735138 |
| 2045000293 | | 696380 |
| 2045000303 | | 735139 |
| 2045000500 | | 818276 |
| 2045002203 | | 735285 |
| 2045002803 | | 735287 |
| 2045003603 | | 735292 |
| 2105000400 | | 817905 |
| 2105000803 | | 731293 |
| 2105000903 | | 731292 |
| 2105001203 | | 732446 |
| 2105001300 | | 817905 |
| 2105001400 | | 817907 |
| 2105001500 | | 817911 |
| 2105002000 | | 817907 |
| 2105002100 | | 817911 |
| 2105002803 | | 731294 |
| 2105003003 | | 731294 |
| 2105003203 | | 732462 |
| 2105003403 | | 735231 |
| 2105005803 | | 734803 |
| 2105006503 | | 735231 |
| 2108300370 | | 816949 |
| 2108300470 | | 817235 |
| 2108300570 | | 817252 |
| 2115000154 | | 818003 |
| 2115000202 | | 732849 |
| 2115000802 | | 732855 |
| 2115001154 | | 818003 |
| 2115001254 | | 818003 |
| 2115001302 | | 734805 |
| 2115002302 | | 732870 |
| 2115003102 | | 732849 |
| 2115003202 | | 732855 |
| 2115003402 | | 732849 |
| 2115003402 | | 735382 |
| 2115003502 | | 734938 |
| 2205000003 | | 734801 |
| 2205000054 | | 818003 |
| 2205000903 | | 735234 |
| 2205002003 | | 735230 |

| OE | PROD | Valeo |
|---|---|---|
| **MERCEDES(.../...)** | | |
| 2208300261 | | 812366 |
| 2215000003 | | 734447 |
| 2215000103 | | 734420 |
| 2215000203 | | 734945 |
| 2215003103 | | 735298 |
| 2215003203 | | 735299 |
| 4145000054 | | 817841 |
| 4635000400 | | 732459 |
| 4635001200 | | 732459 |
| 6015005103 | | 730883 |
| 6015006803 | | 730883 |
| 6015006903 | | 730883 |
| 6015007003 | | 730883 |
| 6015007803 | | 731741 |
| 6015008103 | | 730883 |
| 6015008403 | | 731741 |
| 6315000502 | | 732442 |
| 6385011601 | | 734674 |
| 6385011901 | | 732471 |
| 6385012001 | | 732471 |
| 6385012101 | | 734806 |
| 6385012201 | | 734806 |
| 6385012401 | | 734807 |
| 6385012701 | | 734749 |
| 6385012801 | | 734668 |
| 6385013001 | | 734669 |
| 6388350170 | | 817011 |
| 6395010201 | | 818808 |
| 6395010301 | | 818807 |
| 6398350070 | | 817842 |
| 9015000554 | | 816891 |
| 9015002800 | | 732472 |
| 9015003400 | | 732472 |
| 9015003500 | | 734689 |
| 9015003600 | | 734689 |
| 9015010701 | | 816890 |
| 9065000002 | | 734926 |
| 9065000054 | | 818173 |
| 9065000102 | | 735088 |
| 9065000202 | | 734928 |
| 9065000302 | | 735089 |
| 9065000393 | | 696082 |
| 9065000402 | | 734929 |
| 9065000493 | | 696083 |
| 9065010101 | | 817994 |
| 9425000054 | | 818034 |
| 9705000054 | | 818035 |
| **MG** | | |
| JRB101150 | | 733076 |
| JRB101160 | | 733077 |
| PCC000960 | | 734829 |
| PCC001480 | | 731815 |
| PCC001610 | | 731818 |
| PCC001660 | | 734354 |
| PCC105520 | | 734290 |
| PCC105740 | | 731811 |
| PCC107401 | | 731818 |
| PCC107410 | | 731818 |
| PCC107411 | | 731818 |
| PCC107680 | | 734354 |
| PCC107681 | | 734354 |

| OE | PROD | Valeo |
|---|---|---|
| **MG(.../...)** | | |
| PCC113540 | | 731076 |
| **MINI** | | |
| 11651515368 | | 818713 |
| 17101475550 | | 734327 |
| 17101475552 | | 734326 |
| 17101475554 | | 734328 |
| 17107509714 | | 734327 |
| 17112751275 | | 735481 |
| 17117535099 | | 735480 |
| 17117788753 | | 734329 |
| 17422752632 | | 696377 |
| 17422754854 | | 696379 |
| 17427535100 | | 696378 |
| 17517788755 | | 818714 |
| 64113422666 | | 812382 |
| 64531490572 | | 817547 |
| 64536918597 | | 817837 |
| **MITSUBISHI** | | |
| 1350A050 | | 735200 |
| 1350A155 | | 735058 |
| 1350A182 | | 735441 |
| 1350A297 | | 735575 |
| 7812A171 | | 814214 |
| CAB311B080 | | 817560 |
| MB222073 | | 730449 |
| MB356155 | | 730454 |
| MB356156 | | 730454 |
| MB356521 | | 731056 |
| MB356556 | | 731054 |
| MB538506 | | 731638 |
| MB538509 | | 731639 |
| MB538540 | | 731646 |
| MB538543 | | 732540 |
| MB538548 | | 731642 |
| MB538806 | | 734809 |
| MB605453 | | 731641 |
| MB605455 | | 731641 |
| MB657967 | | 814240 |
| MB660077 | | 734809 |
| MB660212 | | 731462 |
| MB660213 | | 731462 |
| MB660216 | | 734135 |
| MB660364 | | 731646 |
| MB660386 | | 731646 |
| MB660472 | | 731054 |
| MB660558 | | 731647 |
| MB660561 | | 731648 |
| MB660562 | | 732539 |
| MB660566 | | 731451 |
| MB660567 | | 731649 |
| MB813733 | | 818081 |
| MB845144 | | 731648 |
| MB845790 | | 732539 |
| MB845791 | | 732327 |
| MB845792 | | 732539 |
| MB845796 | | 734132 |
| MB845797 | | 734132 |
| MB845810 | | 734142 |
| MB845814 | | 734142 |
| MB890505 | | 731451 |

| OE | PROD | Valeo |
|---|---|---|
| **MITSUBISHI(.../...)** | | |
| MB890506 | | 731649 |
| MB890951 | | 735059 |
| MB890955 | | 732748 |
| MB890957 | | 732748 |
| MB906092 | | 734141 |
| MB906093 | | 734141 |
| MB906097 | | 734136 |
| MB906098 | | 734137 |
| MB906099 | | 734137 |
| MB924249 | | 734138 |
| MB924254 | | 734139 |
| MB924451 | | 734128 |
| MB924972 | | 732327 |
| MB925637 | | 732524 |
| MB925638 | | 734480 |
| MB925662 | | 732525 |
| MN130393 | | 735055 |
| MN130395 | | 735056 |
| MN134204 | | 814272 |
| MN135879 | | 735057 |
| MN151100 | | 814273 |
| MN156319 | | 735202 |
| MN156535 | | 735203 |
| MN171217 | | 735576 |
| MR127283 | | 734146 |
| MR127888 | | 734145 |
| MR127889 | | 734145 |
| MR161362 | | 734128 |
| MR187415 | | 732525 |
| MR187436 | | 731462 |
| MR187961 | | 732612 |
| MR187964 | | 732613 |
| MR188432 | | 735060 |
| MR188433 | | 734809 |
| MR204591 | | 732613 |
| MR212449 | | 734481 |
| MR212454 | | 734129 |
| MR212455 | | 734129 |
| MR218428 | | 814303 |
| MR239626 | | 734144 |
| MR239627 | | 734144 |
| MR258668 | | 734424 |
| MR258669 | | 734143 |
| MR281023 | | 735428 |
| MR281024 | | 735437 |
| MR281667 | | 734129 |
| MR281668 | | 734129 |
| MR299522 | | 732524 |
| MR299618 | | 732612 |
| MR299619 | | 732613 |
| MR312099 | | 734196 |
| MR373172 | | 734197 |
| MR431239 | | 734198 |
| MR513005 | | 814260 |
| MR513110 | | 817790 |
| MR571147 | | 735420 |
| MR968056 | | 735059 |
| MR968133 | | 735058 |
| MR968286 | | 735059 |
| MR968289 | | 735058 |
| MR968857 | | 735198 |

| OE | PROD | Valeo |
|---|---|---|
| **MITSUBISHI(.../...)** | | |
| MR993742 | | 735201 |
| MR996738 | | 814262 |
| **NISSAN** | | |
| 144619U21A | | 818852 |
| 14461AY600 | | 817640 |
| 14461EM00A | | 818264 |
| 1449600QAA | | 817554 |
| 1449600QAB | | 817636 |
| 2140000QAA | | 732717 |
| 2140000QAH | | 732918 |
| 2140000QAJ | | 732918 |
| 2140000QAK | | 732919 |
| 2140000QAM | | 732919 |
| 2140000QAN | | 732853 |
| 2140000QAP | | 732902 |
| 2140000QAS | | 732846 |
| 2140000QAT | | 732902 |
| 2140000QAV | | 732389 |
| 2140000QAX | | 732621 |
| 2140000QAY | | 732523 |
| 2140000QAZ | | 731378 |
| 2140001G00 | | 731085 |
| 2140001G01 | | 731085 |
| 2140005A00 | | 819219 |
| 2140015G01 | | 731085 |
| 2140035A00 | | 819219 |
| 2140043L00 | | 731654 |
| 21400AX600 | | 734246 |
| 21400C6011 | | 732596 |
| 21400C8200 | | 732596 |
| 21400G9603 | | 732596 |
| 21400G9604 | | 732596 |
| 21400G9802 | | 734819 |
| 21400G9803 | | 732589 |
| 21400G9806 | | 732589 |
| 21400JD000 | | 735119 |
| 21400JD200 | | 735118 |
| 21410JD00E | | 734284 |
| 21400JD50A | | 735114 |
| 21400JD70A | | 735115 |
| 21400JD900 | | 735116 |
| 21400JG300 | | 735205 |
| 21400JG700 | | 735206 |
| 21400JG80A | | 735206 |
| 2141000QAA | | 732917 |
| 2141000QAB | | 817654 |
| 214100F121 | | 732592 |
| 214100M003 | | 732405 |
| 214100M100 | | 732405 |
| 214100M203 | | 734151 |
| 214100M204 | | 734155 |
| 214100M400 | | 731202 |
| 214100M403 | | 734151 |
| 214101F515 | | 732718 |
| 214101F520 | | 732718 |
| 214102F000 | | 732528 |
| 214102F600 | | 732529 |
| 214102S810 | | 735350 |
| 21410BC500 | | 734437 |
| 21410BC510 | | 734436 |
| 21410JD50C | | 735381 |

| OE | PROD | Valeo |
|---|---|---|
| **NISSAN(.../...)** | | |
| 2141044R01 | | **731656** |
| 2141050A11 | | **730404** |
| 2141050A20 | | **730404** |
| 2141051E00 | | **731656** |
| 2141051E01 | | **731656** |
| 2141053J00 | | **731659** |
| 2141054A00 | | **730408** |
| 2141055S00 | | **731654** |
| 2141057Y02 | | **731665** |
| 2141058A00 | | **731147** |
| 2141059Y01 | | **731202** |
| 2141059Y02 | | **731665** |
| 2141062C01 | | **731664** |
| 2141062Y01 | | **731670** |
| 2141062Y02 | | **731670** |
| 2141065C01 | | **731202** |
| 214106F600 | | **732718** |
| 2141070J00 | | **731090** |
| 2141070J01 | | **731090** |
| 2141071J00 | | **731090** |
| 2141072J00 | | **731090** |
| 2141072J01 | | **731090** |
| 2141072J20 | | **731193** |
| 2141073P00 | | **731085** |
| 2141074N00 | | **731674** |
| 2141077A00 | | **730406** |
| 214107C002 | | **734446** |
| 214107F000 | | **731785** |
| 2141083A00 | | **730407** |
| 214108H800 | | **735081** |
| 214108H801 | | **735062** |
| 214108H900 | | **735063** |
| 2141097B00 | | **732718** |
| 2141098B00 | | **732718** |
| 2141098B15 | | **732718** |
| 214109C001 | | **732484** |
| 214109C002 | | **734671** |
| 214109C101 | | **732484** |
| 214109F500 | | **732528** |
| 214109F502 | | **732528** |
| 214109F511 | | **732528** |
| 21410AX600 | | **734246** |
| 21410AY600 | | **732903** |
| 21410AY601 | | **732903** |
| 21410AY602 | | **732903** |
| 21410BM400 | | **734736** |
| 21410BN300 | | **734708** |
| 21410BN301 | | **734708** |
| 21410BN700 | | **734737** |
| 21410BU001 | | **734729** |
| 21410BV010 | | **735061** |
| 21410Q9000 | | **731087** |
| 21410Q9001 | | **731087** |
| 214601L015 | | **734150** |
| 214602F300 | | **734215** |
| 2146044R00 | | **731657** |
| 2146044R01 | | **731657** |
| 2146052A00 | | **731082** |
| 2146059A00 | | **731082** |
| 2146062J01 | | **734152** |
| 2146065Y01 | | **731662** |

| OE | PROD | Valeo |
|---|---|---|
| **NISSAN(.../...)** | | |
| 2146065Y02 | | **731662** |
| 2146069F00 | | **734149** |
| 2146078A00 | | **731083** |
| 2146083A00 | | **731661** |
| 2146085E00 | | **731134** |
| 2146085E01 | | **731134** |
| 214608H900 | | **735064** |
| 2146097B00 | | **731287** |
| 214609F510 | | **734215** |
| 214609F511 | | **734215** |
| 21460AV600 | | **734706** |
| 21460AV700 | | **734473** |
| 21460AX800 | | **734247** |
| 21460BM700 | | **734473** |
| 21460BM702 | | **734473** |
| 21460CA010 | | **735204** |
| 2714061J15 | | **812108** |
| 2714098B10 | | **812107** |
| 27140AX700 | | **812250** |
| 27143AX00 | | **812249** |
| 2765000QAF | | **817742** |
| 92100BN900 | | **817822** |
| 92100JD200 | | **814008** |
| 92100JD500 | | **814009** |
| 92100JD700 | | **814010** |
| 92100JG000 | | **814231** |
| 92101G9800 | | **814252** |
| 9211001G61 | | **814284** |
| 921100L710 | | **814256** |
| 921102F000 | | **817253** |
| 921102M112 | | **817792** |
| 921102M117 | | **817794** |
| 9211050B00 | | **814300** |
| 921106F600 | | **817732** |
| 921109F515 | | **817603** |
| 92110BM405 | | **817819** |
| 92110EW80A | | **814221** |
| 92110VJ200 | | **814304** |
| 9211165Y00 | | **814275** |
| **OPEL** | | |
| 09204168 | | **698552** |
| 1300016 | | **883920** |
| 1300050 | | **731217** |
| 1300051 | | **819388** |
| 1300081 | | **819389** |
| 1300084 | | **730396** |
| 1300088 | | **883878** |
| 1300090 | | **730395** |
| 1300092 | | **731175** |
| 1300096 | | **731022** |
| 1300097 | | **730395** |
| 1300100 | | **883881** |
| 1300103 | | **731022** |
| 1300104 | | **731170** |
| 1300107 | | **731175** |
| 1300108 | | **730993** |
| 1300109 | | **734429** |
| 1300111 | | **730994** |
| 1300112 | | **730975** |
| 1300113 | | **730975** |
| 1300116 | | **730993** |

| OE | PROD | Valeo |
|---|---|---|
| **OPEL(.../...)** | | |
| 1300119 | | **735229** |
| 1300120 | | **731236** |
| 1300121 | | **731237** |
| 1300122 | | **730395** |
| 1300124 | | **731217** |
| 1300125 | | **730395** |
| 1300126 | | **730125** |
| 1300132 | | **730994** |
| 1300133 | | **731175** |
| 1300134 | | **730993** |
| 1300135 | | **731174** |
| 1300136 | | **731236** |
| 1300140 | | **730975** |
| 1300144 | | **734604** |
| 1300146 | | **734604** |
| 1300147 | | **730993** |
| 1300148 | | **734429** |
| 1300149 | | **731013** |
| 1300150 | | **731178** |
| 1300151 | | **731179** |
| 1300152 | | **732032** |
| 1300153 | | **734271** |
| 1300154 | | **730975** |
| 1300157 | | **731237** |
| 1300158 | | **731393** |
| 1300159 | | **731847** |
| 1300160 | | **731847** |
| 1300163 | | **731846** |
| 1300165 | | **735065** |
| 1300173 | | **732606** |
| 1300174 | | **732607** |
| 1300178 | | **732349** |
| 1300180 | | **731847** |
| 1300181 | | **732348** |
| 1300182 | | **731847** |
| 1300184 | | **731846** |
| 1300185 | | **732347** |
| 1300186 | | **732723** |
| 1300187 | | **732724** |
| 1300189 | | **732729** |
| 1300192 | | **732607** |
| 1300195 | | **732551** |
| 1300196 | | **732549** |
| 1300197 | | **732548** |
| 1300198 | | **732550** |
| 1300205 | | **732607** |
| 1300208 | | **732550** |
| 1300209 | | **734322** |
| 1300210 | | **734388** |
| 1300211 | | **732723** |
| 1300212 | | **732551** |
| 1300213 | | **732724** |
| 1300214 | | **732549** |
| 1300215 | | **732550** |
| 1300216 | | **732548** |
| 1300220 | | **732694** |
| 1300221 | | **731393** |
| 1300233 | | **732824** |
| 1300236 | | **732825** |
| 1300237 | | **732826** |
| 1300241 | | **732548** |

| OE | PROD | Valeo |
|---|---|---|
| **OPEL(.../...)** | | |
| 1300244 | | **732879** |
| 1300245 | | **732876** |
| 1300246 | | **732877** |
| 1300247 | | **732878** |
| 1300250 | | **732825** |
| 1300251 | | **734302** |
| 1300252 | | **734384** |
| 1300253 | | **734384** |
| 1300254 | | **734385** |
| 1300255 | | **734385** |
| 1300257 | | **732549** |
| 1300259 | | **734464** |
| 1300260 | | **734386** |
| 1300261 | | **734464** |
| 1300264 | | **734339** |
| 1300265 | | **734381** |
| 1300266 | | **734382** |
| 1300267 | | **734432** |
| 1300268 | | **734383** |
| 1300269 | | **734380** |
| 1300271 | | **735080** |
| 1300273 | | **734339** |
| 1300277 | | **735083** |
| 1300279 | | **735097** |
| 1300283 | | **734982** |
| 1300284 | | **734981** |
| 1300287 | | **735041** |
| 1300288 | | **735487** |
| 1300289 | | **735488** |
| 1300290 | | **735486** |
| 1300291 | | **735482** |
| 1300292 | | **735485** |
| 1300293 | | **735483** |
| 1300294 | | **735484** |
| 1300410 | | **818809** |
| 1300412 | | **734345** |
| 1300415 | | **735040** |
| 1302014 | | **883767** |
| 1302015 | | **883771** |
| 1302016 | | **883920** |
| 1302026 | | **883857** |
| 1302027 | | **730125** |
| 1302029 | | **883858** |
| 1302049 | | **883856** |
| 1302057 | | **883880** |
| 1302058 | | **731236** |
| 1302074 | | **883857** |
| 1302077 | | **883858** |
| 1302113 | | **818728** |
| 1302181 | | **883751** |
| 1302189 | | **883751** |
| 1302196 | | **883751** |
| 1302413 | | **817916** |
| 1314443 | | **696382** |
| 1314446 | | **696381** |
| 1314557 | | **696386** |
| 1314966 | | **696385** |
| 1341219 | | **696281** |
| 1341244 | | **696035** |
| 1341299 | | **696173** |
| 1341314 | | **698344** |

| OE | PROD | Valeo |
|---|---|---|
| **OPEL(.../...)** | | |
| 1341331 | | **696283** |
| 1341332 | | **696367** |
| 1341334 | | **696284** |
| 1341344 | | **696173** |
| 1341346 | | **696280** |
| 1341347 | | **696355** |
| 1341348 | | **696370** |
| 1341352 | | **696282** |
| 1341362 | | **698844** |
| 1341364 | | **696024** |
| 1341365 | | **696001** |
| 1341366 | | **696025** |
| 1341368 | | **696026** |
| 1341369 | | **696027** |
| 1341370 | | **696028** |
| 1341371 | | **696029** |
| 1341380 | | **696080** |
| 1341383 | | **696030** |
| 1618020 | | **812149** |
| 1618044 | | **812110** |
| 1618081 | | **816902** |
| 1618108 | | **816902** |
| 1618109 | | **816924** |
| 1618110 | | **812118** |
| 1618134 | | **812284** |
| 1618142 | | **812222** |
| 1618206 | | **812285** |
| 1618222 | | **812225** |
| 1618248 | | **812126** |
| 1618288 | | **812363** |
| 1806002 | | **812146** |
| 1806108 | | **812148** |
| 1806110 | | **812150** |
| 1806116 | | **812146** |
| 1806124 | | **812077** |
| 1843107 | | **812117** |
| 1845028 | | **696172** |
| 1845039 | | **696172** |
| 1850000 | | **817609** |
| 1850051 | | **817670** |
| 1850057 | | **817505** |
| 1850061 | | **817670** |
| 1850073 | | **818047** |
| 1850074 | | **817505** |
| 1850076 | | **817647** |
| 1850077 | | **817648** |
| 1850078 | | **817506** |
| 1850083 | | **817852** |
| 1850084 | | **817853** |
| 1850088 | | **817610** |
| 1850089 | | **818118** |
| 1850090 | | **817610** |
| 1850091 | | **817609** |
| 1850092 | | **817843** |
| 1850093 | | **817844** |
| 1850095 | | **817809** |
| 1850096 | | **817839** |
| 1850097 | | **817846** |
| 1850098 | | **818114** |
| 1850099 | | **817847** |
| 1850111 | | **818168** |

| OE | PROD | Valeo |
|---|---|---|
| **OPEL(.../...)** | | |
| 1850114 | | **814066** |
| 1850119 | | **818193** |
| 1850135 | | **814202** |
| 1850136 | | **814201** |
| 1850168 | | **818192** |
| 4400916 | | **732940** |
| 4401424 | | **817689** |
| 4401893 | | **730944** |
| 4403216 | | **732798** |
| 4403238 | | **817601** |
| 4403573 | | **698412** |
| 4408078 | | **817554** |
| 4408645 | | **732846** |
| 4408646 | | **817577** |
| 4409453 | | **812375** |
| 4411898 | | **817636** |
| 4412816 | | **732911** |
| 4412817 | | **732902** |
| 4414161 | | **732853** |
| 4414387 | | **817644** |
| 4414578 | | **732902** |
| 4414580 | | **817645** |
| 4414972 | | **732918** |
| 4415064 | | **732917** |
| 4415066 | | **732919** |
| 4415068 | | **732919** |
| 4415074 | | **817637** |
| 4415579 | | **698424** |
| 4415731 | | **698412** |
| 4416946 | | **818771** |
| 4416948 | | **734946** |
| 4500847 | | **817115** |
| 4500849 | | **698412** |
| 4500908 | | **817065** |
| 4501134 | | **698424** |
| 4501137 | | **732050** |
| 4705904 | | **734331** |
| 4707764 | | **734331** |
| 4709362 | | **735383** |
| 6300023 | | **732607** |
| 6302002 | | **735229** |
| 6302003 | | **731237** |
| 6302004 | | **731843** |
| 6302007 | | **731840** |
| 6302008 | | **731839** |
| 6302011 | | **731421** |
| 6302020 | | **734353** |
| 6302040 | | **817729** |
| 6302041 | | **817697** |
| 6302046 | | **817729** |
| 6302048 | | **818701** |
| 6302059 | | **817730** |
| 6302065 | | **818722** |
| 6302066 | | **817998** |
| 6341156 | | **696373** |
| 6341158 | | **696374** |
| 6341162 | | **696384** |
| 52463043 | | **731839** |
| 52463045 | | **731840** |
| 52463053 | | **734389** |
| 52479099 | | **732347** |

| OE | PROD | Valeo |
|---|---|---|
| **OPEL(.../...)** | | |
| 90264491 | | **883877** |
| 90528302 | | **731525** |
| 90570725 | | **732724** |
| 93277988 | | **732795** |
| | | **696364** |
| | | **731551** |
| **PEUGEOT => PSA GROUP.** | | |
| **PORSCHE** | | |
| 171819031D | | **812034** |
| 95510614200 | | **734741** |
| 95511080300 | | **818814** |
| 95511080400 | | **818815** |
| 99610613150 | | **734826** |
| 99610613151 | | **734826** |
| 99610613251 | | **734827** |
| 99657311103 | | **814167** |
| **PSA GROUP.** | | |
| 0384E4 | | **817632** |
| 0384E5 | | **817204** |
| 0384E7 | | **816851** |
| 0384E8 | | **816889** |
| 0384F0 | | **816918** |
| 0384F1 | | **816919** |
| 0384F3 | | **817437** |
| 0384F4 | | **816918** |
| 0384F5 | | **817756** |
| 0384F6 | | **817920** |
| 0384F7 | | **817578** |
| 0384F8 | | **817757** |
| 0384F9 | | **817755** |
| 0384G0 | | **817650** |
| 0384G2 | | **817651** |
| 0384G4 | | **817638** |
| 0384G5 | | **817706** |
| 0384G6 | | **817639** |
| 0384G7 | | **817756** |
| 0384G9 | | **817854** |
| 0384H0 | | **818891** |
| 0384H1 | | **818822** |
| 0384H4 | | **818892** |
| 0384H5 | | **817845** |
| 0384H9 | | **818209** |
| 0384J8 | | **818895** |
| 0384K0 | | **818769** |
| 0384K5 | | **818836** |
| 0384K8 | | **818853** |
| 0384L4 | | **818837** |
| 0384L6 | | **818209** |
| 0384L9 | | **818866** |
| 0384N9 | | **818226** |
| 0384P5 | | **818244** |
| 1103E8 | | **817649** |
| 1103H4 | | **817704** |
| 1103J2 | | **817705** |
| 1103N0 | | **817705** |
| 1103N1 | | **817704** |
| 1103N5 | | **817643** |
| 1250A5 | | **698308** |

| OE | PROD | Valeo |
|---|---|---|
| **PSA GROUP.(.../...)** | | |
| 1250C0 | | **698306** |
| 1250C3 | | **698301** |
| 1250E6 | | **698305** |
| 1250F0 | | **698375** |
| 1250F4 | | **696174** |
| 1250F8 | | **696138** |
| 1250G0 | | **696174** |
| 1250G1 | | **696141** |
| 1250G2 | | **696132** |
| 1250G4 | | **696140** |
| 1250G5 | | **696139** |
| 1250G6 | | **696142** |
| 1250G7 | | **696142** |
| 125315 | | **698301** |
| 125329 | | **698303** |
| 125331 | | **698304** |
| 125333 | | **698305** |
| 125337 | | **698306** |
| 125339+1308CF | | **696101** |
| 125346 | | **698425** |
| 125352 | | **698308** |
| 125355 | | **698310** |
| 125361 | | **696188** |
| 125362 | | **696191** |
| 125363 | | **698444** |
| 125377 | | **696191** |
| 125378 | | **696189** |
| 125383 | | **696368** |
| 125390 | | **696135** |
| 125391 | | **696073** |
| 125392 | | **696074** |
| 125394 | | **698542** |
| 125395 | | **696136** |
| 125396 | | **696134** |
| 1253A1 | | **696189** |
| 1253A2 | | **696190** |
| 1253A3 | | **696190** |
| 1253A4 | | **696177** |
| 1253A5 | | **696177** |
| 1253A6 | | **696177** |
| 1253A9 | | **696177** |
| 1253C4 | | **696210** |
| 1253C5 | | **696069** |
| 1253C6 | | **696133** |
| 1253C7 | | **696070** |
| 1253C8 | | **696137** |
| 1253C9 | | **696071** |
| 1253F1 | | **698542** |
| 1253F8 | | **696091** |
| 1253G7 | | **696091** |
| 1253H6 | | **696238** |
| 1253K1 | | **696132** |
| 1253K2 | | **696091** |
| 1253K4 | | **696091** |
| 1253P7 | | **696142** |
| 1253P8 | | **696238** |
| 1300A3 | | **730534** |
| 1300B0 | | **810881** |
| 1300D9 | | **810882** |
| 1300E1 | | **730071** |
| 1300E5 | | **810882** |

| OE | PROD | Valeo |
|---|---|---|
| **PSA GROUP.(.../...)** | | |
| 1300F4 | | **730015** |
| 1300F7 | | **883765** |
| 1300G0 | | **811380** |
| 1300G2 | | **730015** |
| 1300G5 | | **810882** |
| 1300G6 | | **810882** |
| 1300H2 | | **730015** |
| 1300H7 | | **810827** |
| 1300J4 | | **730634** |
| 1300J6 | | **730534** |
| 1300J9 | | **730040** |
| 1300K1 | | **811380** |
| 1300K3 | | **730040** |
| 1300K5 | | **810827** |
| 1300K6 | | **730018** |
| 1300K7 | | **810892** |
| 1300K8 | | **730018** |
| 1300L5 | | **730015** |
| 1300L9 | | **816554** |
| 1300N0 | | **810836** |
| 1300N1 | | **816555** |
| 1300N3 | | **730015** |
| 1300N4 | | **810915** |
| 1300N5 | | **810955** |
| 1300N6 | | **810919** |
| 1300N8 | | **816700** |
| 1300N9 | | **816555** |
| 1300P1 | | **819428** |
| 1300P3 | | **730506** |
| 1300R4 | | **810882** |
| 1300X1 | | **730018** |
| 1301A1 | | **810836** |
| 1301B0 | | **730372** |
| 1301C1 | | **730898** |
| 1301C4 | | **819428** |
| 1301C7 | | **730515** |
| 1301C9 | | **730515** |
| 1301D0 | | **730368** |
| 1301E3 | | **730366** |
| 1301E5 | | **810836** |
| 1301E6 | | **730572** |
| 1301E8 | | **730572** |
| 1301E9 | | **730572** |
| 1301F2 | | **730934** |
| 1301F5 | | **730569** |
| 1301F8 | | **730512** |
| 1301FN | | **731383** |
| 1301FP | | **731384** |
| 1301FY | | **730982** |
| 1301G2 | | **730953** |
| 1301G3 | | **730575** |
| 1301G4 | | **730575** |
| 1301G5 | | **730575** |
| 1301G7 | | **730974** |
| 1301G8 | | **730577** |
| 1301GA | | **731381** |
| 1301GE | | **731382** |
| 1301GG | | **731298** |
| 1301GL | | **731297** |
| 1301H9 | | **730575** |
| 1301HQ | | **730997** |

| OE | PROD | Valeo |
|---|---|---|
| **PSA GROUP.(.../...)** | | |
| 1301HS | | **731611** |
| 1301HT | | **730999** |
| 1301HX | | **731527** |
| 1301J2 | | **730974** |
| 1301J4 | | **731181** |
| 1301J8 | | **816715** |
| 1301J9 | | **816715** |
| 1301JE | | **731176** |
| 1301JG | | **731176** |
| 1301JK | | **730995** |
| 1301JL | | **730953** |
| 1301JQ | | **730575** |
| 1301JV | | **731010** |
| 1301JY | | **731181** |
| 1301K1 | | **730630** |
| 1301K2 | | **730630** |
| 1301K5 | | **730927** |
| 1301K6 | | **730985** |
| 1301K7 | | **730983** |
| 1301KE | | **731180** |
| 1301KG | | **731176** |
| 1301L2 | | **730985** |
| 1301L5 | | **730569** |
| 1301L7 | | **731176** |
| 1301L8 | | **730984** |
| 1301M0 | | **730984** |
| 1301M1 | | **730959** |
| 1301M3 | | **730494** |
| 1301M7 | | **730958** |
| 1301N0 | | **731611** |
| 1301N3 | | **730997** |
| 1301N4 | | **730997** |
| 1301N6 | | **730999** |
| 1301N7 | | **730999** |
| 1301N9 | | **731009** |
| 1301P1 | | **731165** |
| 1301P2 | | **731166** |
| 1301P3 | | **731166** |
| 1301P6 | | **731611** |
| 1301P7 | | **731611** |
| 1301R7 | | **730634** |
| 1301S0 | | **731012** |
| 1301S1 | | **731010** |
| 1301S3 | | **731185** |
| 1301S5 | | **731185** |
| 1301S9 | | **731176** |
| 1301SG | | **731289** |
| 1301SJ | | **731289** |
| 1301SQ | | **731498** |
| 1301SX | | **731527** |
| 1301TA | | **731528** |
| 1301TF | | **731185** |
| 1301TG | | **816715** |
| 1301TH | | **730630** |
| 1301TJ | | **730927** |
| 1301TK | | **730985** |
| 1301TL | | **730983** |
| 1301TV | | **816715** |
| 1301V1 | | **731186** |
| 1301V3 | | **731186** |
| 1301V4 | | **731177** |

| OE | PROD | Valeo |
|---|---|---|
| **PSA GROUP.(.../...)** | | |
| 1301V6 | | **730515** |
| 1301V8 | | **730515** |
| 1301VT | | **731530** |
| 1301W5 | | **731166** |
| 1301W7 | | **731166** |
| 1301W8 | | **731181** |
| 1301X0 | | **731180** |
| 1301Y2 | | **731173** |
| 1301Y3 | | **731173** |
| 1301Y4 | | **731168** |
| 1301Y5 | | **731168** |
| 1301Y7 | | **731168** |
| 1301Y8 | | **731168** |
| 1301Z0 | | **731166** |
| 1301Z2 | | **731166** |
| 1301Z6 | | **731289** |
| 1301Z8 | | **731289** |
| 1301Z9 | | **731495** |
| 1301ZS | | **730572** |
| 130551 | | **883764** |
| 1308CF+125339 | | **696101** |
| 133001 | | **731526** |
| 133002 | | **730934** |
| 133003 | | **731389** |
| 133005 | | **731186** |
| 133006 | | **731391** |
| 133007 | | **731295** |
| 133008 | | **731296** |
| 133010 | | **731570** |
| 133011 | | **731527** |
| 133012 | | **731584** |
| 133013 | | **731584** |
| 133014 | | **731574** |
| 133015 | | **731575** |
| 133017 | | **731611** |
| 133019 | | **730958** |
| 133020 | | **810836** |
| 133021 | | **810836** |
| 133023 | | **731744** |
| 133024 | | **731743** |
| 133027 | | **731586** |
| 133028 | | **731584** |
| 133029 | | **731526** |
| 133031 | | **731750** |
| 133032 | | **734760** |
| 133034 | | **730534** |
| 133035 | | **730018** |
| 133036 | | **734455** |
| 133037 | | **732885** |
| 133038 | | **732886** |
| 133040 | | **732910** |
| 133041 | | **732517** |
| 133042 | | **732577** |
| 133043 | | **732618** |
| 133044 | | **732567** |
| 133045 | | **732535** |
| 133046 | | **732520** |
| 133047 | | **732563** |
| 133049 | | **732520** |
| 133051 | | **732534** |
| 133052 | | **732564** |

| OE | PROD | Valeo |
|---|---|---|
| **PSA GROUP.(.../...)** | | |
| 133053 | | **732910** |
| 133054 | | **732599** |
| 133055 | | **732518** |
| 133056 | | **731570** |
| 133057 | | **732565** |
| 133058 | | **732620** |
| 133060 | | **734411** |
| 133063 | | **732598** |
| 133064 | | **734279** |
| 133065 | | **732910** |
| 133068 | | **734278** |
| 133069 | | **732887** |
| 133070 | | **732617** |
| 133072 | | **732692** |
| 133073 | | **731165** |
| 133074 | | **732909** |
| 133075 | | **732909** |
| 133076 | | **734445** |
| 133078 | | **734280** |
| 133079 | | **734282** |
| 133080 | | **734336** |
| 133081 | | **732492** |
| 133082 | | **732892** |
| 133083 | | **732908** |
| 133084 | | **732890** |
| 133085 | | **732891** |
| 133086 | | **732893** |
| 133087 | | **732794** |
| 133091 | | **732600** |
| 133092 | | **731530** |
| 133096 | | **732895** |
| 133097 | | **731611** |
| 133098 | | **731611** |
| 1330A0 | | **734281** |
| 1330A1 | | **732892** |
| 1330A2 | | **732894** |
| 1330A3 | | **732894** |
| 1330A4 | | **732830** |
| 1330A5 | | **732880** |
| 1330A6 | | **732807** |
| 1330A7 | | **732882** |
| 1330A8 | | **731527** |
| 1330A9 | | **731527** |
| 1330B0 | | **732910** |
| 1330B1 | | **732910** |
| 1330B2 | | **732906** |
| 1330B3 | | **732886** |
| 1330B4 | | **732885** |
| 1330B5 | | **732910** |
| 1330C0 | | **732831** |
| 1330C1 | | **732831** |
| 1330C2 | | **732831** |
| 1330C5 | | **732909** |
| 1330C6 | | **732887** |
| 1330C8 | | **731611** |
| 1330C9 | | **732620** |
| 1330E0 | | **732896** |
| 1330E1 | | **732517** |
| 1330E2 | | **734456** |
| 1330E3 | | **732692** |
| 1330E4 | | **731611** |

| OE | PROD | Valeo |
|---|---|---|
| **PSA GROUP.(.../...)** | | |
| 1330E5 | | **732930** |
| 1330E6 | | **732930** |
| 1330E7 | | **732881** |
| 1330E8 | | **732910** |
| 1330F1 | | **731611** |
| 1330F2 | | **732906** |
| 1330F3 | | **732904** |
| 1330F4 | | **732892** |
| 1330F5 | | **734338** |
| 1330F6 | | **732893** |
| 1330F7 | | **732895** |
| 1330F8 | | **732886** |
| 1330F9 | | **732885** |
| 1330G0 | | **732904** |
| 1330G1 | | **732910** |
| 1330G2 | | **732908** |
| 1330G3 | | **732890** |
| 1330G4 | | **732891** |
| 1330G5 | | **732887** |
| 1330G6 | | **732906** |
| 1330G8 | | **732896** |
| 1330G9 | | **732894** |
| 1330H0 | | **732888** |
| 1330H2 | | **732885** |
| 1330H3 | | **732909** |
| 1330H5 | | **732886** |
| 1330H6 | | **732910** |
| 1330H8 | | **732944** |
| 1330H9 | | **734411** |
| 1330J2 | | **732930** |
| 1330J3 | | **732887** |
| 1330J4 | | **731584** |
| 1330J6 | | **732945** |
| 1330J7 | | **734338** |
| 1330J7 | | **735608** |
| 1330J8 | | **734463** |
| 1330J9 | | **734366** |
| 1330K2 | | **734423** |
| 1330K3 | | **735068** |
| 1330K6 | | **731173** |
| 1330K8 | | **734452** |
| 1330L8 | | **731611** |
| 1330N3 | | **732930** |
| 1330N5 | | **734346** |
| 1330N6 | | **732930** |
| 1330N7 | | **732892** |
| 1330P3 | | **735070** |
| 1330P4 | | **735072** |
| 1330P5 | | **735069** |
| 1330P8 | | **734398** |
| 1330P9 | | **734338** |
| 1330P9 | | **735608** |
| 1330Q0 | | **734921** |
| 1330Q5 | | **732930** |
| 1330Q6 | | **734282** |
| 1330R1 | | **734281** |
| 1330R2 | | **734279** |
| 1330S1 | | **732930** |
| 1330S2 | | **735020** |
| 1330S4 | | **735125** |
| 1330S7 | | **735597** |

| OE | PROD | Valeo |
|---|---|---|
| **PSA GROUP.(.../...)** | | |
| 1330S8 | | **735091** |
| 1330T5 | | **735598** |
| 1330V1 | | **735200** |
| 1330V5 | | **735090** |
| 1330W2 | | **734338** |
| 1330X2 | | **735371** |
| 133189 | | **730572** |
| 133195 | | **730630** |
| 1331CP | | **732564** |
| 1331CS | | **730630** |
| 1331CW | | **732577** |
| 1331E0 | | **810882** |
| 1331EE | | **732599** |
| 1331FT | | **732598** |
| 1331H9 | | **731391** |
| 1331HL | | **730491** |
| 1331HQ | | **731526** |
| 1331K8 | | **732564** |
| 1331LK | | **734336** |
| 1331LP | | **732492** |
| 1331LS | | **732892** |
| 1331Q7 | | **731743** |
| 1331RK | | **730572** |
| 1331RY | | **730927** |
| 1331S0 | | **731744** |
| 1331X2 | | **731010** |
| 1331Y5 | | **732910** |
| 133302 | | **732563** |
| 133303 | | **732563** |
| 133313 | | **732904** |
| 1440H9 | | **818841** |
| 1440Q9 | | **818227** |
| 148492608A | | **732830** |
| 148936708A | | **732881** |
| 1490942080 | | **817755** |
| 161835 | | **817753** |
| 1628KC | | **817751** |
| 1628LY | | **817752** |
| 178773008A | | **732880** |
| 227530 | | **816751** |
| 6445PT | | **812235** |
| 644848 | | **812023** |
| 644851 | | **812399** |
| 644854 | | **883674** |
| 644855 | | **883737** |
| 644860 | | **812024** |
| 644862 | | **812337** |
| 644872 | | **812016** |
| 644874 | | **812115** |
| 644875 | | **812114** |
| 644877 | | **883976** |
| 644878 | | **812005** |
| 644880 | | **812006** |
| 644889 | | **812037** |
| 6448A7 | | **812116** |
| 6448C8 | | **812044** |
| 6448F9 | | **812141** |
| 6448G1 | | **883965** |
| 6448G2 | | **883965** |
| 6448G3 | | **812221** |
| 6448G9 | | **812181** |

| OE | PROD | Valeo |
|---|---|---|
| **PSA GROUP.(.../...)** | | |
| 6448H8 | | **812358** |
| 6448J6 | | **812212** |
| 6448J8 | | **812215** |
| 6448K0 | | **812322** |
| 6448K3 | | **812338** |
| 6448K4 | | **812339** |
| 6448K9 | | **812234** |
| 6448P1 | | **812379** |
| 6448P2 | | **812380** |
| 6448P3 | | **812381** |
| 6448P4 | | **812414** |
| 6448P9 | | **812378** |
| 6448Q1 | | **812415** |
| 6448S4 | | **812416** |
| 6448V6 | | **812417** |
| 6448W9 | | **812424** |
| 6453FH | | **817464** |
| 6453FP | | **817465** |
| 6453JA | | **817375** |
| 6453V5 | | **816803** |
| 6455AA | | **817524** |
| 6455AC | | **817526** |
| 6455AG | | **817655** |
| 6455AL | | **814095** |
| 6455AP | | **817579** |
| 6455AQ | | **817668** |
| 6455AS | | **817667** |
| 6455AT | | **817508** |
| 6455AV | | **817230** |
| 6455AW | | **817229** |
| 6455CG | | **818018** |
| 6455CH | | **818000** |
| 6455CJ | | **818001** |
| 6455CN | | **814080** |
| 6455CP | | **817824** |
| 6455CQ | | **817667** |
| 6455CV | | **817508** |
| 6455CX | | **818170** |
| 6455CY | | **818171** |
| 6455CZ | | **814095** |
| 6455EA | | **817740** |
| 6455EC | | **814081** |
| 6455EE | | **818014** |
| 6455EF | | **818013** |
| 6455EK | | **818015** |
| 6455EL | | **814095** |
| 6455EP | | **814069** |
| 6455EQ | | **814085** |
| 6455ET | | **814095** |
| 6455EW | | **818171** |
| 6455EY | | **817740** |
| 6455FA | | **814315** |
| 6455FW | | **814065** |
| 6455FX | | **817824** |
| 6455GH | | **818170** |
| 6455GK | | **818171** |
| 6455GY | | **814090** |
| 6455GZ | | **814173** |
| 6455Q9 | | **817230** |
| 6455R0 | | **817230** |
| 6455R3 | | **816835** |

| OE | PROD | Valeo |
|---|---|---|
| **PSA GROUP.(.../...)** | | |
| 6455T3 | | **818191** |
| 6455V0 | | **816964** |
| 6455V5 | | **816977** |
| 6455V8 | | **816984** |
| 6455V9 | | **817230** |
| 6455W2 | | **817229** |
| 6455X9 | | **817283** |
| 6455Y0 | | **817283** |
| 6455Y2 | | **817042** |
| 6455Y3 | | **816852** |
| 6455Y6 | | **816850** |
| 6455Z1 | | **817655** |
| 6455Z7 | | **817655** |
| 6464C8 | | **508555** |
| 75513460 | | **883520** |
| 75515461 | | **883468** |
| 9151898180 | | **730071** |
| 9456006180 | | **810827** |
| 9456006280 | | **730018** |
| 9456165080 | | **730534** |
| 95206579 | | **883866** |
| 95230684 | | **812002** |
| 95495037 | | **883774** |
| 95495038 | | **883773** |
| 95495316 | | **812036** |
| 95496528 | | **810811** |
| 95593547 | | **698342** |
| 95606691 | | **883464** |
| 95606692 | | **883715** |
| 95606694 | | **883686** |
| 95635181 | | **810954** |
| 95636832 | | **730635** |
| 9563683280 | | **730635** |
| 95639090 | | **961149** |
| 95653129 | | **730897** |
| 95659648 | | **816706** |
| 95668984 | | **698312** |
| 95668985 | | **698343** |
| 96001830 | | **819428** |
| 96011831 | | **883866** |
| 96029201 | | **730897** |
| 96029202 | | **730896** |
| 96031483 | | **816554** |
| 9604181980 | | **730018** |
| 96050669 | | **816715** |
| 9605066980 | | **816715** |
| 96050670 | | **816716** |
| 96050671 | | **730507** |
| 96055582 | | **730508** |
| 9605691880 | | **730366** |
| 9605691880 | | **730372** |
| 9607690980 | | **816716** |
| 96082116 | | **730491** |
| 9608211680 | | **730491** |
| 96086712 | | **810836** |
| 96090004 | | **812016** |
| 9609615780 | | **730491** |
| 96104142 | | **730957** |
| 9610414280 | | **730957** |
| 96107231 | | **730960** |
| 9610861080 | | **730958** |

| OE | PROD | Valeo |
|---|---|---|
| **PSA GROUP.(.../...)** | | |
| 96114748 | | **816751** |
| 9611611480 | | **730515** |
| 9611611480 | | **730368** |
| 96116843 | | **730494** |
| 96122111 | | **816823** |
| 96127227 | | **730494** |
| 96135333 | | **730934** |
| 9613533380 | | **730934** |
| 9613558280 | | **730569** |
| 9613739180 | | **730985** |
| 96138923 | | **730958** |
| 9613892380 | | **730958** |
| 96140585 | | **730491** |
| 96140587 | | **730498** |
| 9614193480 | | **730953** |
| 9614199980 | | **730575** |
| 9614200180 | | **730572** |
| 9614343080 | | **730974** |
| 96144046 | | **730982** |
| 96148094 | | **730897** |
| 96149206 | | **730630** |
| 9614920880 | | **730983** |
| 96150272 | | **734454** |
| 96151644 | | **730959** |
| 9615222680 | | **730984** |
| 9615793080 | | **731185** |
| 96172131 | | **730632** |
| 9618848880 | | **731297** |
| 9619218280 | | **730959** |
| 9619398080 | | **731181** |
| 9619398180 | | **731180** |
| 9619398280 | | **731176** |
| 9619521680 | | **731289** |
| 9620002680 | | **731584** |
| 9620209980 | | **731173** |
| 9621093080 | | **731527** |
| 9621576080 | | **731389** |
| 9622374780 | | **731289** |
| 9622908580 | | **731530** |
| 9622930980 | | **731528** |
| 9623042380 | | **731526** |
| 9623090180 | | **730982** |
| 9623170680 | | **731527** |
| 9623170880 | | **731527** |
| 9623666880 | | **734760** |
| 9623880480 | | **730953** |
| 9624221480 | | **731586** |
| 9624221580 | | **731584** |
| 9624221680 | | **731584** |
| 9624765980 | | **731389** |
| 9624820080 | | **731181** |
| 9624820180 | | **731180** |
| 9624820280 | | **731176** |
| 9624956680 | | **732886** |
| 9625005480 | | **734336** |
| 9625086080 | | **731527** |
| 9626953580 | | **731186** |
| 9627359980 | | **731750** |
| 9627507380 | | **731744** |
| 9627507480 | | **731743** |
| 9629088680 | | **732577** |

| OE | PROD | Valeo |
|---|---|---|
| **PSA GROUP.(.../...)** | | |
| 9629088680 | | **731743** |
| 9629678780 | | **732618** |
| 9629892580 | | **734455** |
| 9629934480 | | **731526** |
| 9629994680 | | **732599** |
| 9632175080 | | **732617** |
| 9632197780 | | **732887** |
| 9632198080 | | **732892** |
| 9632198080 | | **732909** |
| 9632466180 | | **732517** |
| 9632466280 | | **732577** |
| 9632466380 | | **732518** |
| 9632466480 | | **732565** |
| 9632604480 | | **732567** |
| 9632953080 | | **732492** |
| 9633070480 | | **732534** |
| 9633070580 | | **732535** |
| 9633070680 | | **732520** |
| 9633070780 | | **732520** |
| 9633272680 | | **731570** |
| 9634797480 | | **732620** |
| 9635989980 | | **732598** |
| 9637040680 | | **732892** |
| 9637502480 | | **734445** |
| 9638520080 | | **732831** |
| 9638520280 | | **732831** |
| 9638520480 | | **732930** |
| 9638520580 | | **732930** |
| 9639607780 | | **731530** |
| 9639856580 | | **732930** |
| 9640673380 | | **732794** |
| 9641371380 | | **732807** |
| 9641371480 | | **732882** |
| 9641371780 | | **731527** |
| 9641372680 | | **731527** |
| 9641728080 | | **732830** |
| 9641728480 | | **732945** |
| 9643700480 | | **732909** |
| 9643725180 | | **732517** |
| 9645586780 | | **734338** |
| 9645586880 | | **734463** |
| 9645586980 | | **734366** |
| 9645587080 | | **734423** |
| 96455874 | | **734338** |
| 9645636780 | | **732831** |
| 9647419280 | | **732894** |
| 9647420880 | | **732908** |
| 9647421180 | | **732890** |
| 9647421280 | | **732891** |
| 9647421380 | | **732892** |
| 9647421580 | | **732893** |
| 9647421680 | | **732895** |
| 9647510180 | | **732886** |
| 9647510480 | | **732886** |
| 9647510580 | | **732910** |
| 9647510780 | | **732910** |
| 9647510880 | | **732887** |
| 9647511480 | | **732885** |
| 9647661880 | | **732930** |
| 9650089380 | | **817756** |
| 9650123680 | | **818892** |

| OE | PROD | Valeo |
|---|---|---|
| **PSA GROUP(.../...)** | | |
| 9650357380 | | 818891 |
| 9653692180 | | 732892 |
| 9655580280 | | 818891 |
| 9655580380 | | 818892 |
| 9655580480 | | 817756 |
| 9680115580 | | 735125 |
| 9680239580 | | 732831 |
| 9751900180 | | 730015 |
| 9751900180 | | 730634 |
| C101241343 | | 816751 |
| C101960254 | | 816823 |
| ZF05931556 | | 883765 |
| ZF05981188 | | 730040 |
| ZF05981189 | | 730040 |
| ZF07555444 | | 730040 |
| ZF07555802 | | 811380 |
| **RENAULT** | | |
| 144613211R | | 818250 |
| 144618748R | | 818251 |
| 144960006R | | 818878 |
| 144960022R | | 818870 |
| 144960023R | | 818869 |
| 214100002R | | 735607 |
| 214100014R | | 735184 |
| 214100016R | | 735182 |
| 214100017R | | 735181 |
| 214100057R | | 735180 |
| 214810011R | | 696229 |
| 214810028R | | 696229 |
| 214810898R | | 696376 |
| 271159831R | | 812413 |
| 6001009077 | | 810926 |
| 6001025340 | | 730973 |
| 6006000709 | | 730499 |
| 6006000710 | | 816655 |
| 6006000712 | | 730502 |
| 6006004494 | | 732608 |
| 6025101336 | | 819431 |
| 6025101338 | | 730184 |
| 6025101341 | | 730185 |
| 6025107990 | | 819431 |
| 6025170679 | | 812139 |
| 6025301910 | | 731738 |
| 6025306732 | | 818030 |
| 6025306733 | | 696285 |
| 6025306734 | | 734285 |
| 6025307275 | | 731161 |
| 6025310510 | | 818028 |
| 6025312321 | | 734828 |
| 6025312322 | | 817925 |
| 6025313324 | | 734284 |
| 6025313325 | | 818029 |
| 6025313331 | | 734284 |
| 6025313367 | | 818027 |
| 6025370414 | | 812287 |
| 6025370415 | | 812288 |
| 7700272472 | | 730180 |
| 7700272488 | | 816863 |
| 7700272527 | | 730511 |
| 7700301171 | | 732072 |
| 7700304932 | | 731910 |

| OE | PROD | Valeo |
|---|---|---|
| **RENAULT(.../...)** | | |
| 7700310123 | | 732940 |
| 7700312858 | | 731910 |
| 7700312899 | | 732846 |
| 7700312901 | | 817577 |
| 7700312903 | | 817554 |
| 7700314382 | | 732389 |
| 7700414103 | | 817171 |
| 7700417175 | | 732474 |
| 7700418301 | | 816912 |
| 7700425842 | | 732316 |
| 7700428082 | | 732621 |
| 7700428083 | | 817428 |
| 7700428315 | | 817799 |
| 7700428658 | | 732720 |
| 7700429769 | | 732559 |
| 7700430143 | | 732387 |
| 7700430647 | | 732338 |
| 7700430648 | | 732387 |
| 7700430784 | | 732523 |
| 7700432391 | | 816912 |
| 7700432392 | | 817197 |
| 7700433077 | | 817799 |
| 7700434383 | | 817509 |
| 7700436062 | | 817602 |
| 7700436091 | | 817923 |
| 7700436916 | | 732737 |
| 7700657109 | | 810843 |
| 7700696425 | | 810843 |
| 7700704654 | | 810933 |
| 7700712747 | | 810933 |
| 7700720232 | | 810843 |
| 7700725010 | | 883729 |
| 7700728083 | | 698004 |
| 7700736827 | | 810835 |
| 7700741216 | | 730944 |
| 7700750158 | | 698004 |
| 7700757853 | | 810889 |
| 7700757854 | | 883851 |
| 7700757930 | | 883852 |
| 7700758428 | | 698007 |
| 7700759195 | | 883729 |
| 7700762507 | | 698004 |
| 7700773288 | | 810887 |
| 7700773289 | | 810938 |
| 7700773700 | | 810851 |
| 7700773968 | | 883959 |
| 7700778034 | | 810888 |
| 7700782480 | | 698007 |
| 7700784035 | | 730510 |
| 7700784036 | | 730510 |
| 7700784037 | | 816655 |
| 7700784038 | | 883875 |
| 7700784039 | | 810912 |
| 7700784040 | | 816657 |
| 7700784652 | | 698313 |
| 7700785734 | | 730140 |
| 7700786442 | | 730055 |
| 7700786444 | | 816658 |
| 7700789732 | | 698007 |
| 7700790964 | | 730180 |
| 7700795175 | | 816552 |

| OE | PROD | Valeo |
|---|---|---|
| **RENAULT(.../...)** | | |
| 7700803753 | | 810995 |
| 7700804240 | | 730183 |
| 7700805486 | | 816655 |
| 7700806575 | | 730181 |
| 7700806576 | | 730182 |
| 7700809048 | | 730973 |
| 7700810264 | | 730055 |
| 7700811808 | | 730510 |
| 7700811821 | | 730511 |
| 7700816323 | | 730551 |
| 7700818904 | | 698086 |
| 7700828623 | | 698004 |
| 7700828624 | | 698005 |
| 7700836300 | | 732338 |
| 7700836301 | | 731378 |
| 7700836303 | | 732474 |
| 7700836304 | | 732071 |
| 7700838129 | | 731538 |
| 7700838133 | | 731380 |
| 7700838134 | | 731378 |
| 7700838135 | | 731379 |
| 7700840853 | | 816866 |
| 7700876213 | | 731738 |
| 7700876214 | | 731161 |
| 7701026569 | | 812045 |
| 7701027078 | | 883790 |
| 7701032225 | | 812015 |
| 7701034291 | | 812045 |
| 7701034539 | | 812032 |
| 7701034767 | | 816654 |
| 7701034768 | | 816656 |
| 7701034769 | | 883875 |
| 7701034770 | | 816657 |
| 7701035695 | | 698085 |
| 7701035718 | | 730540 |
| 7701035721 | | 730549 |
| 7701035723 | | 730548 |
| 7701035891 | | 812014 |
| 7701036152 | | 730633 |
| 7701036722 | | 698015 |
| 7701036909 | | 812154 |
| 7701038219 | | 731161 |
| 7701038220 | | 731162 |
| 7701038227 | | 816867 |
| 7701038237 | | 731128 |
| 7701038405 | | 698084 |
| 7701038542 | | 812113 |
| 7701038688 | | 730969 |
| 7701039481 | | 812048 |
| 7701039742 | | 816865 |
| 7701040662 | | 731129 |
| 7701040663 | | 816836 |
| 7701041302 | | 698316 |
| 7701041957 | | 731529 |
| 7701042436 | | 731552 |
| 7701042440 | | 698317 |
| 7701042517 | | 812112 |
| 7701043411 | | 731161 |
| 7701043673 | | 698350 |
| 7701043695 | | 817115 |
| 7701043698 | | 698412 |

| OE | PROD | Valeo |
|---|---|---|
| **RENAULT(.../...)** | | |
| 7701044076 | | 731161 |
| 7701044184 | | 696287 |
| 7701044406 | | 817065 |
| 7701044566 | | 731161 |
| 7701044790 | | 812169 |
| 7701045211 | | 732819 |
| 7701045212 | | 732051 |
| 7701045215 | | 698356 |
| 7701045345 | | 732544 |
| 7701045346 | | 818008 |
| 7701045349 | | 817924 |
| 7701045355 | | 696285 |
| 7701045410 | | 732544 |
| 7701045552 | | 812169 |
| 7701045816 | | 696013 |
| 7701046205 | | 698424 |
| 7701046210 | | 732050 |
| 7701047886 | | 816658 |
| 7701047887 | | 730055 |
| 7701047888 | | 730499 |
| 7701047889 | | 730551 |
| 7701049603 | | 698412 |
| 7701049664 | | 732798 |
| 7701049665 | | 817601 |
| 7701049754 | | 732544 |
| 7701050192 | | 696288 |
| 7701050677 | | 698302 |
| 7701051492 | | 696286 |
| 7701052120 | | 817742 |
| 7701054966 | | 696287 |
| 7701057117 | | 732917 |
| 7701057119 | | 732918 |
| 7701057120 | | 732919 |
| 7701057121 | | 817637 |
| 7701057122 | | 817689 |
| 7701059544 | | 698412 |
| 7701060003 | | 812309 |
| 7701066109 | | 735112 |
| 7701066110 | | 814003 |
| 7701070217 | | 696013 |
| 7701203126 | | 698004 |
| 7701204680 | | 812157 |
| 7701204731 | | 816839 |
| 7701204841 | | 817061 |
| 7701204955 | | 816756 |
| 7701205214 | | 816987 |
| 7701205450 | | 812161 |
| 7701205451 | | 812162 |
| 7701205538 | | 812223 |
| 7701205584 | | 812170 |
| 7701207712 | | 812247 |
| 7701208196 | | 696081 |
| 7701208323 | | 812247 |
| 7701208381 | | 812308 |
| 7701208766 | | 812373 |
| 7701209524 | | 812423 |
| 7701348798 | | 883463 |
| 7701349277 | | 810835 |
| 7701349387 | | 883282 |
| 7701349413 | | 698007 |
| 7701352201 | | 730548 |

| OE | PROD | Valeo |
|---|---|---|
| **RENAULT(.../...)** | | |
| 7701352204 | | 730549 |
| 7701352605 | | 731380 |
| 7701352606 | | 731538 |
| 7701352898 | | 731910 |
| 7701469149 | | 696285 |
| 7701473279 | | 812375 |
| 7702146438 | | 883959 |
| 7702159882 | | 883959 |
| 7704000112 | | 883739 |
| 8200008761 | | 817926 |
| 8200008763 | | 817568 |
| 8200008764 | | 732827 |
| 8200008765 | | 732828 |
| 8200019380 | | 732902 |
| 8200019381 | | 732911 |
| 8200019382 | | 817645 |
| 8200033729 | | 734728 |
| 8200033733 | | 817731 |
| 8200033831 | | 732721 |
| 8200047162 | | 817490 |
| 8200049077 | | 732765 |
| 8200049080 | | 732761 |
| 8200072712 | | 732687 |
| 8200072713 | | 732717 |
| 8200073413 | | 817654 |
| 8200073817 | | 732853 |
| 8200073912 | | 817644 |
| 8200075810 | | 817927 |
| 8200106950 | | 817428 |
| 8200115540 | | 818727 |
| 8200115541 | | 732873 |
| 8200115542 | | 732874 |
| 8200115543 | | 817608 |
| 8200137650 | | 817687 |
| 8200138738 | | 732903 |
| 8200140970 | | 817654 |
| 8200152728 | | 817568 |
| 8200164413 | | 732523 |
| 8200182361 | | 817701 |
| 8200189286 | | 732866 |
| 8200189288 | | 732817 |
| 8200211563 | | 733075 |
| 8200219497 | | 817636 |
| 8200221131 | | 817662 |
| 8200221132 | | 817661 |
| 8200221885 | | 818820 |
| 8200240818 | | 732687 |
| 8200245596 | | 732960 |
| 8200245598 | | 817646 |
| 8200252209 | | 817923 |
| 8200292771 | | 735489 |
| 8200292773 | | 817828 |
| 8200297815 | | 732902 |
| 8200297816 | | 732911 |
| 8200301884 | | 818772 |
| 8200302463 | | 732828 |
| 8200325004 | | 818002 |
| 8200325007 | | 734438 |
| 8200330848 | | 732072 |
| 8200332851 | | 814007 |
| 8200332852 | | 814006 |

| OE | PROD | Valeo |
|---|---|---|
| **RENAULT(.../...)** | | |
| 8200343476 | | 732721 |
| 8200357536 | | 732946 |
| 8200365427 | | 734246 |
| 8200369311 | | 818835 |
| 8200384071 | | 734922 |
| 8200411160 | | 818771 |
| 8200411166 | | 734946 |
| 8200443896 | | 735156 |
| 8200443897 | | 818165 |
| 8200448252 | | 814061 |
| 8200448552 | | 735134 |
| 8200448553 | | 735135 |
| 8200465490 | | 814172 |
| 8200468911 | | 818166 |
| 8200468913 | | 734462 |
| 8200471884 | | 817999 |
| 8200471888 | | 817999 |
| 8200489879 | | 734461 |
| 8200688392 | | 818166 |
| 8200688393 | | 818165 |
| 8200708128 | | 817662 |
| 8200708130 | | 817661 |
| 8200774211 | | 814171 |
| 921000294R | | 814187 |
| 921001367R | | 814188 |
| 921005824R | | 814179 |
| 921100001R | | 814094 |
| **RENAULT TRUCKS** | | |
| 5000294090 | | 812349 |
| 5000739631 | | 812026 |
| 5000752789 | | 816962 |
| 5001829118 | | 812130 |
| 5001833355 | | 812128 |
| 5010104235 | | 812035 |
| **RENAULT - IRISBUS** | | |
| 5010104657 | | 812355 |
| **RENAULT TRUCKS** | | |
| 5010315281 | | 816980 |
| 5010315372 | | 818172 |
| 5010382644 | | 817379 |
| 5010382645 | | 732569 |
| 5010382814 | | 817380 |
| 5010435102 | | 732570 |
| **ROVER** | | |
| 37H7216 | | 881769 |
| ADU9098 | | 730119 |
| ADU9170 | | 730172 |
| ADU9170B | | 730172 |
| ADU9855 | | 730595 |
| ARP2000 | | 730172 |
| ARP2000B | | 730172 |
| ATP1084 | | 730119 |
| BAU5230 | | 812039 |
| CDU1996 | | 730595 |
| CDU2482 | | 730591 |
| DBP7123 | | 730168 |
| EAP8721 | | 730565 |
| GRD105 | | 730119 |
| GRD1055 | | 734829 |

| OE | PROD | Valeo |
|---|---|---|
| **ROVER(.../...)** | | |
| GRD1071 | | 734354 |
| GRD1072 | | 731815 |
| GRD1074 | | 731818 |
| GRD1076 | | 731076 |
| GRD1080 | | 734829 |
| GRD110 | | 730172 |
| GRD111 | | 730119 |
| GRD116 | | 730595 |
| GRD124 | | 730168 |
| GRD125 | | 730565 |
| GRD133 | | 730595 |
| GRD135 | | 730591 |
| GRD136 | | 731210 |
| GRD138 | | 730970 |
| GRD139 | | 731215 |
| GRD143 | | 731211 |
| GRD146 | | 731215 |
| GRD147 | | 731215 |
| GRD149 | | 731243 |
| GRD162 | | 732759 |
| GRD165 | | 731243 |
| GRD166 | | 731243 |
| GRD168 | | 732323 |
| GRD169 | | 731100 |
| GRD170 | | 731076 |
| GRD812 | | 731412 |
| GRD922 | | 731412 |
| GRD924 | | 731815 |
| GRD925 | | 731818 |
| GRD926 | | 731458 |
| GRD927 | | 731811 |
| GRD930 | | 731817 |
| GRD931 | | 731816 |
| GRD932 | | 731820 |
| GRD933 | | 734290 |
| GRD937 | | 731818 |
| GRD938 | | 731815 |
| GRD974 | | 730172 |
| GRD979 | | 731215 |
| JEF10002 | | 812069 |
| JEF10005 | | 812028 |
| JEF100060 | | 812070 |
| JEM10002 | | 812071 |
| JRB100190 | | 818031 |
| JRB100310 | | 816921 |
| JRB101150 | | 733076 |
| JRB101160 | | 733077 |
| JRM100060 | | 698669 |
| PCC000960 | | 734829 |
| PCC001180 | | 731815 |
| PCC001480 | | 731815 |
| PCC001610 | | 731818 |
| PCC001660 | | 734354 |
| PCC10006 | | 730595 |
| PCC10036 | | 730591 |
| PCC10040 | | 731210 |
| PCC10087 | | 730591 |
| PCC10103 | | 731215 |
| PCC10233 | | 731211 |
| PCC10237 | | 732759 |
| PCC10290 | | 732759 |

| OE | PROD | Valeo |
|---|---|---|
| **ROVER(.../...)** | | |
| PCC10296 | | 731215 |
| PCC10299 | | 731215 |
| PCC10343 | | 731243 |
| PCC103980 | | 731409 |
| PCC104670 | | 731816 |
| PCC104680 | | 731817 |
| PCC105520 | | 734290 |
| PCC105740 | | 731811 |
| PCC107401 | | 731818 |
| PCC107410 | | 731818 |
| PCC107411 | | 731818 |
| PCC107680 | | 734354 |
| PCC107681 | | 734354 |
| PCC113540 | | 731076 |
| **SAAB** | | |
| 12765753 | | 818818 |
| 12773072 | | 818840 |
| 12773283 | | 814000 |
| 12775540 | | 735129 |
| 12775541 | | 735130 |
| 12788019 | | 817729 |
| 12793295 | | 817712 |
| 12793296 | | 817711 |
| 12800599 | | 817998 |
| 12801549 | | 696003 |
| 12801550 | | 696002 |
| 12804660 | | 818175 |
| 12804713 | | 818817 |
| 12805055 | | 735131 |
| 12805057 | | 735083 |
| 13114368 | | 696026 |
| 13114369 | | 696027 |
| 13156387 | | 734345 |
| 13167336 | | 696079 |
| 13167337 | | 696080 |
| 13182322 | | 696030 |
| 13200486 | | 735086 |
| 24410988 | | 698844 |
| 24410993 | | 696387 |
| 24418338 | | 732879 |
| 24418341 | | 732876 |
| 24418342 | | 732947 |
| 24418345 | | 734339 |
| 24418362 | | 817647 |
| 4070728 | | 812027 |
| 4283438 | | 732120 |
| 4357794 | | 732123 |
| 4357927 | | 732122 |
| 4382396 | | 814317 |
| 4575700 | | 734714 |
| 4575718 | | 734830 |
| 4575734 | | 734831 |
| 4576039 | | 817275 |
| 4634937 | | 817507 |
| 4726568 | | 817276 |
| 4729562 | | 732120 |
| 4729588 | | 732122 |
| 4729596 | | 732123 |
| 5048350 | | 814000 |
| 5048491 | | 814000 |
| 5193370 | | 734714 |

| OE | PROD | Valeo |
|---|---|---|
| **SAAB(.../...)** | | |
| 5193388 | | 734830 |
| 7541063 | | 810965 |
| 7541071 | | 810965 |
| 7549298 | | 810965 |
| 9620238 | | 812027 |
| 93171801 | | 812253 |
| **SANTANA** | | |
| 1770056B00 | | 734662 |
| **SCANIA** | | |
| 1446258 | | 818988 |
| **SEAT => VAG GROUP** | | |
| **SKODA => VAG GROUP** | | |
| **SUBARU** | | |
| 45111AE001 | | 734465 |
| 45111AE002 | | 734465 |
| 45111AE003 | | 734465 |
| 45111FC300 | | 734405 |
| 45111FC320 | | 734405 |
| 45111FC340 | | 734577 |
| 45111FC350 | | 732410 |
| 45111FC370 | | 732410 |
| 45111FE050 | | 734465 |
| 45111FE051 | | 734465 |
| 45111FE080 | | 735211 |
| 45111FE081 | | 735211 |
| 45111GA650 | | 731456 |
| 45111GA660 | | 731456 |
| 45111GA670 | | 731456 |
| 45111GA870 | | 731456 |
| 45111SA011 | | 735210 |
| 45111SA031 | | 735209 |
| 45111SA081 | | 735404 |
| 45119AG020 | | 735212 |
| 45119FA030 | | 734577 |
| 45119FA040 | | 732410 |
| 45199AA080 | | 731438 |
| 45199AA090 | | 731675 |
| 45199AA100 | | 731675 |
| 45199AA120 | | 731675 |
| 45199AA121 | | 734211 |
| 45199AA190 | | 731438 |
| 45199AA200 | | 731675 |
| 45199AA220 | | 731438 |
| 45199AC040 | | 734212 |
| 45199AC041 | | 734212 |
| 45199AC070 | | 734158 |
| 45199AC071 | | 734158 |
| 45199FA030 | | 734577 |
| 45199FC330 | | 735208 |
| 45199FC361 | | 734577 |
| 45199FC371 | | 732410 |
| 45199KA261 | | 731677 |
| 45199KA271 | | 731678 |
| 45199KC001 | | 734157 |
| 45199KC002 | | 734157 |
| 73210AC021 | | 814259 |

| OE | PROD | Valeo |
|---|---|---|
| **SUBARU(.../...)** | | |
| 73210AC050 | | 818101 |
| 73210AG000 | | 814314 |
| 73210FC000 | | 814306 |
| 73210FC030 | | 814268 |
| 73210FC050 | | 814311 |
| 73210SA011 | | 814312 |
| 745111290 | | 731153 |
| 745111380 | | 731153 |
| 745111740 | | 731153 |
| **SUZUKI** | | |
| 1770052D10 | | 734161 |
| 1770054G00 | | 734164 |
| 1770054G10 | | 734165 |
| 1770060A11 | | 731463 |
| 1770060B22 | | 731828 |
| 1770060B32 | | 734159 |
| 1770060G00 | | 732750 |
| 1770060G01 | | 732750 |
| 1770062G01 | | 734835 |
| 1770063E20 | | 734203 |
| 1770066D01 | | 734162 |
| 1770066J00 | | 735433 |
| 1770066J10 | | 735580 |
| 1770071C01 | | 734166 |
| 1770071C12 | | 734203 |
| 1770075F00 | | 734917 |
| 1770075F10 | | 734486 |
| 1770077E00 | | 734213 |
| 1770077E10 | | 735405 |
| 1770077E20 | | 734213 |
| 1770078E10 | | 734214 |
| 1770079J00 | | 735407 |
| 1770079J50 | | 735400 |
| 1770080A10 | | 735578 |
| 1770080G00 | | 734171 |
| 1770081A00 | | 734170 |
| 1770082021 | | 730456 |
| 1770082022 | | 730456 |
| 1770083E00 | | 732719 |
| 1770084CA0 | | 735073 |
| 1770084CB0 | | 734918 |
| 1770086CA0 | | 734406 |
| 1770086CB0 | | 734919 |
| 1770086CC2 | | 735074 |
| 17700M72F20 | | 731866 |
| 9531051K00 | | 814219 |
| 9531060G41 | | 814305 |
| 9531063J00 | | 814237 |
| 9531064J00 | | 814228 |
| 9531067A50 | | 814244 |
| **TOYOTA** | | |
| 1604121280 | | 735449 |
| 1640002270 | | 732950 |
| 1640002280 | | 732753 |
| 1640002310 | | 732950 |
| 1640003050 | | 731196 |
| 1640003061 | | 734193 |
| 1640003090 | | 731831 |
| 1640003180 | | 732951 |
| 1640003190 | | 732754 |

| OE | PROD | Valeo |
|---|---|---|
| **TOYOTA(.../...)** | | |
| 1640007040 | | 731684 |
| 164000B030 | | 734845 |
| 164000D030 | | 735415 |
| 164000D080 | | 734401 |
| 164000D100 | | 734490 |
| 164000D210 | | 734711 |
| 164000D220 | | 734711 |
| 164000G010 | | 735075 |
| 164000H010 | | 734491 |
| 164000H110 | | 734712 |
| 164000J010 | | 732421 |
| 164000L250 | | 735442 |
| 164000N011 | | 734916 |
| 164000N031 | | 735574 |
| 164000N060 | | 735213 |
| 164000Q010 | | 735072 |
| 164000Q020 | | 735069 |
| 164000Q040 | | 735445 |
| 164000R010 | | 735573 |
| 164000R011 | | 735572 |
| 164000R061 | | 735188 |
| 164000R061 | | 735188 |
| 1640010010 | | 731124 |
| 1640010011 | | 731124 |
| 1640010020 | | 731124 |
| 1640010021 | | 731124 |
| 1640010031 | | 731124 |
| 1640011090 | | 731122 |
| 1640011170 | | 731119 |
| 1640011200 | | 730471 |
| 1640011310 | | 731713 |
| 1640011320 | | 731714 |
| 1640011340 | | 731713 |
| 1640011350 | | 732543 |
| 1640011681 | | 731688 |
| 1640011690 | | 734176 |
| 1640011830 | | 734176 |
| 1640011850 | | 732543 |
| 1640014050 | | 730469 |
| 1640014060 | | 730468 |
| 1640015190 | | 732561 |
| 1640015200 | | 730469 |
| 1640015210 | | 730470 |
| 1640015360 | | 730471 |
| 1640015370 | | 730471 |
| 1640015371 | | 730471 |
| 1640015372 | | 730471 |
| 1640015380 | | 731105 |
| 1640015481 | | 731441 |
| 1640015500 | | 731464 |
| 1640015501 | | 731464 |
| 1640015530 | | 731441 |
| 1640015531 | | 731441 |
| 1640015690 | | 731441 |
| 1640016020 | | 731199 |
| 1640016030 | | 731199 |
| 1640016080 | | 732561 |
| 1640016110 | | 731199 |
| 1640016120 | | 731199 |
| 1640016130 | | 731106 |
| 1640016150 | | 730471 |

| OE | PROD | Valeo |
|---|---|---|
| **TOYOTA(.../...)** | | |
| 1640016200 | | 731105 |
| 1640016301 | | 734839 |
| 1640016330 | | 730471 |
| 1640016460 | | 731685 |
| 1640016461 | | 731685 |
| 1640016470 | | 731565 |
| 1640016480 | | 731441 |
| 1640016481 | | 731685 |
| 1640016490 | | 731441 |
| 1640016491 | | 731441 |
| 1640016530 | | 731441 |
| 1640016620 | | 732614 |
| 1640016660 | | 731441 |
| 1640016680 | | 731441 |
| 1640016690 | | 731464 |
| 1640016790 | | 732614 |
| 1640017020 | | 732415 |
| 1640017021 | | 734189 |
| 1640017240 | | 734189 |
| 164001B020 | | 731688 |
| 1640020090 | | 734177 |
| 1640020271 | | 734492 |
| 1640021060 | | 734840 |
| 1640021070 | | 734841 |
| 1640021080 | | 734840 |
| 1640021140 | | 734199 |
| 1640021180 | | 734200 |
| 1640022060 | | 732413 |
| 1640022110 | | 732417 |
| 1640022121 | | 734182 |
| 1640022160 | | 735250 |
| 1640023080 | | 732421 |
| 1640023100 | | 732421 |
| 1640026390 | | 735216 |
| 1640027040 | | 734199 |
| 1640027060 | | 734397 |
| 1640028100 | | 734201 |
| 1640028130 | | 734182 |
| 1640028140 | | 734183 |
| 1640028190 | | 734493 |
| 1640028230 | | 734194 |
| 1640028280 | | 735214 |
| 1640028560 | | 735215 |
| 1640030140 | | 735568 |
| 1640030170 | | 735565 |
| 1640031351 | | 735569 |
| 1640033070 | | 734842 |
| 1640033080 | | 734916 |
| 1640042100 | | 731716 |
| 1640042120 | | 731717 |
| 1640042121 | | 731717 |
| 1640042130 | | 731716 |
| 1640042141 | | 731715 |
| 1640046290 | | 734173 |
| 1640046310 | | 734174 |
| 1640046320 | | 734175 |
| 1640050210 | | 734192 |
| 1640050211 | | 734192 |
| 1640055030 | | 731122 |
| 164005B320 | | 735593 |
| 1640062100 | | 731684 |

| OE | PROD | Valeo |
|---|---|---|
| **TOYOTA(.../...)** | | |
| 1640062150 | | 731837 |
| 1640063030 | | 819123 |
| 1640063120 | | 819123 |
| 1640064070 | | 731095 |
| 1640064080 | | 731698 |
| 1640064110 | | 731095 |
| 1640064120 | | 731095 |
| 1640064160 | | 731698 |
| 1640064430 | | 731095 |
| 1640064440 | | 731095 |
| 1640064460 | | 731095 |
| 1640064630 | | 731568 |
| 1640064631 | | 731568 |
| 1640064650 | | 731568 |
| 1640064651 | | 731568 |
| 1640064730 | | 731569 |
| 1640064731 | | 731569 |
| 1640066040 | | 734185 |
| 1640066110 | | 734191 |
| 1640066111 | | 734191 |
| 1640066120 | | 734190 |
| 1640066121 | | 734190 |
| 1640067130 | | 734205 |
| 1640067140 | | 734206 |
| 164006A070 | | 731568 |
| 164006A180 | | 734850 |
| 164006A290 | | 735567 |
| 1640070100 | | 735583 |
| 1640074060 | | 731115 |
| 1640074070 | | 731114 |
| 1640074120 | | 731098 |
| 1640074130 | | 731097 |
| 1640074140 | | 731097 |
| 1640074170 | | 734180 |
| 1640074350 | | 731110 |
| 1640074450 | | 731097 |
| 1640074540 | | 731696 |
| 1640074550 | | 731694 |
| 1640074560 | | 734181 |
| 1640074600 | | 732416 |
| 1640074610 | | 732416 |
| 1640074640 | | 734180 |
| 1640074750 | | 731196 |
| 1640074790 | | 731830 |
| 1640074810 | | 731682 |
| 1640074840 | | 731831 |
| 1640075160 | | 734204 |
| 1640076061 | | 731833 |
| 1640076062 | | 731833 |
| 1640076071 | | 732476 |
| 1640076072 | | 732476 |
| 1640076091 | | 732476 |
| 1640076092 | | 732476 |
| 164007A060 | | 732542 |
| 164007A080 | | 732542 |
| 164007A110 | | 734172 |
| 164007A121 | | 734466 |
| 164007A122 | | 734466 |
| 164007A271 | | 732420 |
| 164007A280 | | 732420 |
| 164007A281 | | 732420 |

| OE | PROD | Valeo |
|---|---|---|
| **TOYOTA(.../...)** | | |
| 164007A282 | | 732420 |
| 164007A290 | | 734488 |
| 164007A300 | | 734489 |
| 164007A490 | | 734216 |
| 164007A500 | | 734217 |
| 16400YV010 | | 735070 |
| 1641014060 | | 730468 |
| 1641063030 | | 819123 |
| 1641064100 | | 731095 |
| 1653515020 | | 730471 |
| 1653574010 | | 731441 |
| 1653574070 | | 731568 |
| 1794027010 | | 817698 |
| 8710712340 | | 812286 |
| 8845002170 | | 814263 |
| 8845002240 | | 814210 |
| 8845005010 | | 817802 |
| 8845005020 | | 817803 |
| 8845005100 | | 814208 |
| 8845005120 | | 814209 |
| 8845005140 | | 814271 |
| 8845005170 | | 814213 |
| 8845012280 | | 814234 |
| 8845012290 | | 814205 |
| 8845013031 | | 817805 |
| 8845047020 | | 814158 |
| 8846002050 | | 814298 |
| 8846005010 | | 814246 |
| 8846006060 | | 814283 |
| 8846006061 | | 814247 |
| 8846012460 | | 814248 |
| 8846012480 | | 818107 |
| 8846012540 | | 814238 |
| 8846020470 | | 818104 |
| 8846028550 | | 814261 |
| 8846032090 | | 814279 |
| 8846033010 | | 814282 |
| 8846035090 | | 818103 |
| 8846035130 | | 814245 |
| 8846035200 | | 814308 |
| 8846035280 | | 814269 |
| 8846042021 | | 814285 |
| 8846042070 | | 814218 |
| 8846042100 | | 814204 |
| 8846044030 | | 818105 |
| 8846044350 | | 818032 |
| 8846044520 | | 814207 |
| 8846052010 | | 814307 |
| 8846052020 | | 817674 |
| 8846052040 | | 814309 |
| 8846052110 | | 814233 |
| 8846074010 | | 814220 |
| 8846135160 | | 814236 |
| 8846160051 | | 814280 |
| 8846160091 | | 814230 |
| 8846160100 | | 814203 |
| 884500D020 | | 817674 |
| 884500F100 | | 814212 |
| 884500F110 | | 814211 |
| 884500H010 | | 818014 |
| 884500H020 | | 818013 |

| OE | PROD | Valeo |
|---|---|---|
| **TOYOTA(.../...)** | | |
| 884600D050 | | 814223 |
| 884600D060 | | 814224 |
| **VAG GROUP.** | | |
| 025121253A | | 732435 |
| 028145805 | | 817761 |
| 038131513S | | 817754 |
| 03C145749B | | 818838 |
| 058145805A | | 817625 |
| 058145805B | | 817625 |
| 058145805G | | 817625 |
| 059145805 | | 818827 |
| 059145806 | | 818828 |
| 068117021B | | 817943 |
| 068121253E | | 732435 |
| 093121251F | | 883863 |
| 113610500 | | 730375 |
| 115610501 | | 730375 |
| 115610502 | | 730375 |
| 165959455AE | | 696034 |
| 165959455AM | | 698369 |
| 165959455L | | 696031 |
| 165959455T | | 698368 |
| 171121253AM | | 883905 |
| 171121253BC | | 883718 |
| 171121253CJ | | 883819 |
| 171819031E | | 812034 |
| 191121251C | | 883849 |
| 191121251F | | 883849 |
| 191121253 | | 883849 |
| 191121253A | | 734586 |
| 191121253C | | 883820 |
| 191121253F | | 734586 |
| 191121253G | | 734586 |
| 191121253K | | 883820 |
| 191121253L | | 883820 |
| 191121253N | | 734853 |
| 191819031F | | 812030 |
| 1C0121253A | | 732396 |
| 1C0121253D | | 732957 |
| 1C0145803D | | 817555 |
| 1C0820413A | | 817427 |
| 1C0820413E | | 817427 |
| 1C0820413G | | 817427 |
| 1E0145805 | | 817765 |
| 1H0121253A | | 731268 |
| 1H0121253AE | | 732437 |
| 1H0121253BA | | 731032 |
| 1H0121253BC | | 731127 |
| 1H0121253BE | | 730955 |
| 1H0121253CB | | 731267 |
| 1H0121253D | | 731025 |
| 1H0121253H | | 731025 |
| 1H0121253L | | 731267 |
| 1H0121253P | | 731265 |
| 1H0121253R | | 730505 |
| 1H0145805A | | 817764 |
| 1H0145805B | | 817764 |
| 1H0820413 | | 816910 |
| 1H0959455 | | 698370 |
| 1H0959455AD | | 696032 |
| 1H0959455AH | | 696059 |

| OE | PROD | Valeo |
|---|---|---|
| **VAG GROUP.(.../...)** | | |
| 1H0959455D | | 698367 |
| 1H0959455G | | 696034 |
| 1H0959455J | | 698371 |
| 1H0959455L | | 698371 |
| 1H1819031A | | 812030 |
| 1H1819031B | | 812030 |
| 1H1820413 | | 816910 |
| 1H2819031A | | 812031 |
| 1HM121253D | | 731268 |
| 1HM820413B | | 817024 |
| 1J0121253AC | | 732867 |
| 1J0121253AD | | 731606 |
| 1J0121253G | | 731607 |
| 1J0121253G | | 736083 |
| 1J0121253H | | 731606 |
| 1J0121253J | | 731606 |
| 1J0121253K | | 731607 |
| 1J0121253L | | 731606 |
| 1J0121253N | | 732175 |
| 1J0121253P | | 731606 |
| 1J0121253S | | 732427 |
| 1J0145803A | | 817457 |
| 1J0145803E | | 817653 |
| 1J0145803F | | 817457 |
| 1J0145803H | | 817653 |
| 1J0145803L | | 817653 |
| 1J0145803M | | 817653 |
| 1J0145803N | | 817653 |
| 1J0145803N | | 817557 |
| 1J0145803T | | 817457 |
| 1J0820413D | | 817244 |
| 1J0820413L | | 817244 |
| 1J0820413N | | 817244 |
| 1J0959455M | | 698373 |
| 1K0121251AB | | 734333 |
| 1K0121251AN | | 735120 |
| 1K0121251AR | | 735120 |
| 1K0121251BK | | 734333 |
| 1K0121251BL | | 735120 |
| 1K0121251BN | | 735179 |
| 1K0121251CJ | | 735120 |
| 1K0121251CL | | 735280 |
| 1K0121251CN | | 735186 |
| 1K0121251E | | 734335 |
| 1K0121251EC | | 735375 |
| 1K0121251F | | 734335 |
| 1K0121251N | | 734333 |
| 1K0121251P | | 734332 |
| 1K0121251Q | | 734332 |
| 1K0121251R | | 735120 |
| 1K0121253AA | | 732872 |
| 1K0121253AC | | 735121 |
| 1K0121253F | | 734335 |
| 1K0121253H | | 732872 |
| 1K0121253P | | 734332 |
| 1K0145803 | | 818795 |
| 1K0145803A | | 818795 |
| 1K0145803B | | 818795 |
| 1K0145803E | | 818795 |
| 1K0145803F | | 818213 |
| 1K0145803Q | | 818213 |

| OE | PROD | Valeo |
|---|---|---|
| **VAG GROUP.(.../...)** | | |
| 1K0145803S | | 818795 |
| 1K0145803T | | 818898 |
| 1K0145805G | | 818899 |
| 1K0819031 | | 812254 |
| 1K0819031A | | 812254 |
| 1K0819031B | | 812254 |
| 1K0820411E | | 817777 |
| 1K0820411G | | 817777 |
| 1K0820411H | | 817777 |
| 1K0820411P | | 817777 |
| 1L0121251 | | 730370 |
| 1L0121251A | | 731271 |
| 1L0121251C | | 731270 |
| 1L0121251E | | 731270 |
| 1L0121253 | | 730947 |
| 1L0121253A | | 731271 |
| 1L0121253B | | 883727 |
| 1L0121253C | | 731269 |
| 1L0121253E | | 731271 |
| 1L0121253F | | 731269 |
| 1L0121253G | | 731270 |
| 1L0121253P | | 883727 |
| 1L0121253R | | 883727 |
| 1S0121253P | | 735469 |
| 1T0820411B | | 817806 |
| 1T0820411C | | 817806 |
| 1T0820411E | | 817806 |
| 281265303B | | 812245 |
| 2D0121253B | | 731605 |
| 2D0121253E | | 732952 |
| 2D0145805 | | 816890 |
| 2D0145805D | | 816890 |
| 2D0820413A | | 816996 |
| 2D0820413C | | 816996 |
| 2E0121253 | | 734930 |
| 2E0121253A | | 735084 |
| 2E0121253B | | 734927 |
| 2E0145804 | | 818732 |
| 2E0820413 | | 818173 |
| 2E0959455 | | 696082 |
| 2E0959455A | | 696083 |
| 321121251BJ | | 730485 |
| 321121253AG | | 883864 |
| 321121253AL | | 883727 |
| 321121253BH | | 730485 |
| 321121253BM | | 883720 |
| 321121253BQ | | 883864 |
| 327959455A | | 696038 |
| 353121253AA | | 883869 |
| 353121253AC | | 883870 |
| 353121253AL | | 734415 |
| 353121253E | | 883871 |
| 353121253F | | 883871 |
| 353121253N | | 732438 |
| 353121253R | | 732436 |
| 353959455D | | 696047 |
| 357121251 | | 730971 |
| 357121251B | | 730971 |
| 357121253AB | | 730629 |
| 357959455F | | 696039 |
| 357959455K | | 696067 |

| OE | PROD | Valeo |
|---|---|---|
| **VAG GROUP.(.../...)** | | |
| 357959455L | | 696067 |
| 3A0121253 | | 731005 |
| 3A0121253AA | | 731007 |
| 3A0121253AB | | 731008 |
| 3A0121253C | | 731006 |
| 3A0121253T | | 731006 |
| 3A0959455B | | 696056 |
| 3A0959455M | | 696057 |
| 3B0145805E | | 818720 |
| 3B0145805H | | 818720 |
| 3B0260401 | | 817679 |
| 3B0260401A | | 817679 |
| 3B0260401B | | 817679 |
| 3C0121253K | | 734333 |
| 3C0121253Q | | 734333 |
| 3C0145805G | | 818899 |
| 3C0145805P | | 818899 |
| 3C0820411C | | 814002 |
| 3D0145803 | | 817634 |
| 3D0145804 | | 817635 |
| 443121251AA | | 732440 |
| 443121253E | | 730349 |
| 443260403F | | 814295 |
| 443959455N | | 696049 |
| 447121251H | | 734738 |
| 4A0121251 | | 730360 |
| 4A0121251A | | 730361 |
| 4A0121251D | | 730361 |
| 4A0121251E | | 730360 |
| 4A0121251G | | 730362 |
| 4A0121251H | | 730362 |
| 4A0121251J | | 730362 |
| 4A0121251K | | 730363 |
| 4A0121251L | | 734751 |
| 4A0121251Q | | 734751 |
| 4A0959455 | | 696037 |
| 4A0959455B | | 696037 |
| 4A0959455C | | 696036 |
| 4B0121251 | | 734752 |
| 4B0121251A | | 734753 |
| 4B0121251AK | | 734753 |
| 4B0121251K | | 731756 |
| 4B0121251N | | 734753 |
| 4B0121251R | | 731757 |
| 4B0121251T | | 731755 |
| 4B0145805A | | 817865 |
| 4B0260403AA | | 817665 |
| 4B0260403H | | 817666 |
| 4B0260403R | | 817665 |
| 4B0260403S | | 817997 |
| 4B0260403T | | 817666 |
| 4B3121251 | | 734859 |
| 4B3121251D | | 734859 |
| 4D0121251 | | 734695 |
| 4D0121251J | | 734754 |
| 4D0121251K | | 734755 |
| 4D0145805B | | 817864 |
| 4E0121251C | | 735033 |
| 4F0260403E | | 814004 |
| 4F0959455 | | 696017 |
| 4F0959455A | | 696018 |

| OE | PROD | Valeo |
|---|---|---|
| **VAG GROUP.(.../...)** | | |
| 4F0959455M | | 696243 |
| 4F0959455N | | 696242 |
| 4Z7121251 | | 731757 |
| 4Z7121251B | | 731757 |
| 535121251 | | 734606 |
| 535121251B | | 731401 |
| 535121251C | | 734606 |
| 535121253B | | 734606 |
| 535121253J | | 731401 |
| 5N0121253H | | 735133 |
| 6E0145805B | | 817486 |
| 6K0121191 | | 698320 |
| 6K0121191A | | 698321 |
| 6K0121191C | | 698322 |
| 6K0121191Q | | 698320 |
| 6K0121253 | | 730947 |
| 6K0121253A | | 730945 |
| 6K0121253AA | | 731267 |
| 6K0121253AC | | 731728 |
| 6K0121253AD | | 732317 |
| 6K0121253AG | | 732698 |
| 6K0121253AS | | 732710 |
| 6K0121253BB | | 732493 |
| 6K0121253BC | | 732698 |
| 6K0121253C | | 730946 |
| 6K0121253G | | 731266 |
| 6K0121253H | | 730948 |
| 6K0121253J | | 730946 |
| 6K0121253K | | 730947 |
| 6K0121253L | | 731268 |
| 6K0121253M | | 731265 |
| 6K0121253N | | 731266 |
| 6K0121253P | | 730947 |
| 6K0121253R | | 730946 |
| 6K0121253S | | 730948 |
| 6K0121253T | | 731264 |
| 6K0145805 | | 817766 |
| 6K0145805C | | 817767 |
| 6K0145805E | | 817767 |
| 6K0145805F | | 817767 |
| 6K0820411 | | 817245 |
| 6K0820411A | | 817245 |
| 6K0820413A | | 816908 |
| 6K0820413B | | 816908 |
| 6K0959455A | | 698357 |
| 6K0959455AA | | 698528 |
| 6K0959455B | | 698358 |
| 6K0959455C | | 698360 |
| 6K0959455D | | 698359 |
| 6K0959455F | | 696067 |
| 6LL121253 | | 732864 |
| 6N0121253 | | 730504 |
| 6N0121253A | | 730503 |
| 6N0121253AC | | 730955 |
| 6N0121253AE | | 732953 |
| 6N0121253AH | | 730955 |
| 6N0121253AK | | 730954 |
| 6N0121253B | | 730503 |
| 6N0121253J | | 730504 |
| 6N0121253K | | 730956 |
| 6N0121253L | | 730954 |

| OE | PROD | Valeo |
|---|---|---|
| **VAG GROUP.(.../...)** | | |
| 6N0959453N | | 696196 |
| 6N0959453P | | 696196 |
| 6N0959455 | | 696041 |
| 6N0959455A | | 696041 |
| 6N0959455C | | 696041 |
| 6N0959455D | | 696041 |
| 6N0959455F | | 696042 |
| 6Q0121201BT | | 733062 |
| 6Q0121201HA | | 733062 |
| 6Q0121253AD | | 732864 |
| 6Q0121253AE | | 732864 |
| 6Q0121253J | | 732863 |
| 6Q0121253K | | 732863 |
| 6Q0121253L | | 732864 |
| 6Q0121253M | | 732864 |
| 6Q0121253Q | | 732862 |
| 6Q0121253R | | 732864 |
| 6Q0145804A | | 817556 |
| 6Q0145804B | | 817558 |
| 6Q0145804E | | 817558 |
| 6Q0145804G | | 818829 |
| 6Q0145805E | | 817558 |
| 6Q0819031 | | 812323 |
| 6Q0820411E | | 817686 |
| 6Q0820411H | | 817686 |
| 6Q0820411J | | 817686 |
| 6Q0820411K | | 817686 |
| 6Q0959455AF | | 696019 |
| 6Q0959455D | | 696375 |
| 6QE121253 | | 732863 |
| 6QE121253A | | 732862 |
| 6QE121253B | | 732864 |
| 6R0145805H | | 735310 |
| 6U0121251 | | 730375 |
| 6U0121253A | | 732479 |
| 6X0820413 | | 817246 |
| 6X0820413A | | 817247 |
| 6X0959455A | | 696042 |
| 6X0959455C | | 696078 |
| 6X0959455F | | 696042 |
| 701121253 | | 731411 |
| 701121253B | | 731411 |
| 701121253D | | 732397 |
| 701121253F | | 732397 |
| 701121253K | | 732397 |
| 701121253M | | 732845 |
| 701145805A | | 817937 |
| 701819031A | | 812013 |
| 701959455A | | 696043 |
| 701959455AE | | 696043 |
| 701959455AM | | 696043 |
| 701959455C | | 696043 |
| 701959455J | | 696179 |
| 7D0121253 | | 731616 |
| 7D0121253A | | 732177 |
| 7D0145803A | | 817372 |
| 7D0145805 | | 817372 |
| 7H0145804B | | 818272 |
| 7L0121207D | | 696388 |
| 7L0121207E | | 696389 |
| 7L0121253 | | 734741 |

| OE | PROD | Valeo |
|---|---|---|
| **VAG GROUP.(.../...)** | | |
| 7L0121253A | | 734741 |
| 7L0145803A | | 818814 |
| 7L0145804A | | 818815 |
| 7L6121253 | | 734739 |
| 7L6121253A | | 734740 |
| 7L6121253C | | 734739 |
| 7L6121253E | | 734740 |
| 7M0121253B | | 731386 |
| 7M0121253D | | 731387 |
| 7M0121253K | | 732797 |
| 7M0145805 | | 817936 |
| 7M0819030 | | 812361 |
| 7M0820413F | | 816948 |
| 7M1819030B | | 812324 |
| 7M3121253A | | 732786 |
| 7M3121253B | | 732790 |
| 7M3820411A | | 818004 |
| 7M3820411B | | 818004 |
| 7M3820411D | | 818004 |
| 7M3820411E | | 818004 |
| 811121253F | | 819259 |
| 811819031 | | 812034 |
| 855121251D | | 883863 |
| 855121251E | | 883863 |
| 855121251F | | 883863 |
| 867121253AB | | 816703 |
| 867121253E | | 883818 |
| 867121253F | | 883818 |
| 867121253L | | 816703 |
| 867819121A | | 812029 |
| 871121251A | | 883720 |
| 871121253 | | 883818 |
| 893121251 | | 819260 |
| 893121251AA | | 731501 |
| 893121251E | | 731760 |
| 893121251F | | 883863 |
| 893121251G | | 731505 |
| 893121251H | | 730972 |
| 893121251K | | 883863 |
| 893121251N | | 731760 |
| 893121251T | | 731760 |
| 893121253 | | 819259 |
| 893121253A | | 730349 |
| 893260403 | | 814291 |
| 893260403L | | 814288 |
| 894819031A | | 812012 |
| 8A0121251 | | 731422 |
| 8A0121251A | | 731428 |
| 8A0121251B | | 731429 |
| 8A0121251C | | 731430 |
| 8A0121251D | | 731429 |
| 8A0121251E | | 731503 |
| 8A0145805B | | 817762 |
| 8A0260403AC | | 814296 |
| 8A0260403D | | 814286 |
| 8D0121251AT | | 732361 |
| 8D0121251BA | | 732811 |
| 8D0121251BB | | 731757 |
| 8D0121251BC | | 731755 |
| 8D0121251BE | | 731755 |
| 8D0121251E | | 731537 |

| OE | PROD | Valeo |
|---|---|---|
| **VAG GROUP.(.../...)** | | |
| 8D0121251K | | 731537 |
| 8D0121251L | | 731757 |
| 8D0121251M | | 731755 |
| 8D0121251N | | 731756 |
| 8D0121251P | | 732361 |
| 8D0121251Q | | 731537 |
| 8D0145805D | | 818720 |
| 8D0260401A | | 816967 |
| 8D0260403A | | 816967 |
| 8D0260403G | | 817840 |
| 8D0260403H | | 816967 |
| 8D0959455B | | 698182 |
| 8D0959455C | | 698155 |
| 8D0959455D | | 696055 |
| 8D0959455R | | 696055 |
| 8D1819030A | | 812137 |
| 8D1819030B | | 812137 |
| 8E0121251 | | 732839 |
| 8E0121251A | | 732963 |
| 8E0121251B | | 734269 |
| 8E0121251C | | 734419 |
| 8E0121251D | | 734269 |
| 8E0121251G | | 734418 |
| 8E0121251J | | 734268 |
| 8E0121251K | | 734270 |
| 8E0121251L | | 734269 |
| 8E0121251M | | 734269 |
| 8E0121251P | | 735093 |
| 8E0121251Q | | 734270 |
| 8E0145805E | | 817869 |
| 8E0145805F | | 818757 |
| 8E0145805G | | 817870 |
| 8E0145805L | | 817867 |
| 8E0145805N | | 817867 |
| 8E0145805P | | 817869 |
| 8E0145805S | | 818757 |
| 8E0145806C | | 817870 |
| 8E0145806D | | 817870 |
| 8E0145806F | | 818825 |
| 8E0145806J | | 818825 |
| 8E0260403B | | 817569 |
| 8E0260403D | | 817741 |
| 8E0260403E | | 818190 |
| 8E0260403L | | 817741 |
| 8E0260403M | | 818190 |
| 8E0260403P | | 818190 |
| 8E0260403Q | | 818190 |
| 8E0260403R | | 818190 |
| 8E0260403T | | 817741 |
| 8E0959455 | | 698610 |
| 8E0959455A | | 698609 |
| 8E0959455B | | 698611 |
| 8E0959455C | | 698612 |
| 8E0959455K | | 698610 |
| 8E0959455M | | 698612 |
| 8E0959455N | | 698611 |
| 8E1820031 | | 812255 |
| 8E2820031 | | 812256 |
| 8K0121251AA | | 735473 |
| 8K0121251H | | 735474 |
| 8K0121251R | | 735471 |

| OE | PROD | Valeo |
|---|---|---|
| **VAG GROUP.(.../...)** | | |
| 8K0121251T | | 735472 |
| 8K0959455A | | 696241 |
| 8K0959455C | | 696240 |
| 8L9145805C | | 817488 |
| 8L9145805G | | 817488 |
| 8L9145805H | | 817488 |
| 8L9145806B | | 817487 |
| 8N0145805C | | 817438 |
| 8N0145805D | | 817438 |
| 8Z0121251C | | 733074 |
| 8Z0121251D | | 732785 |
| 8Z0145805B | | 817872 |
| 8Z0145805C | | 817872 |
| 8Z0260403C | | 817570 |
| 8Z0260403D | | 817570 |
| 8Z0819030 | | 812319 |
| J1640054610 | | 734515 |
| J1640054630 | | 734515 |
| J1640058500 | | 734515 |
| SE021117002A | | 883958 |
| SE021117002B | | 730542 |
| SE021117002C | | 883921 |
| SE021117002D | | 730542 |
| SE021186005C | | 812017 |
| SE141117000A | | 883053 |
| **VAUXHALL** | | |
| 03049245 | | 883751 |
| 03054012 | | 730125 |
| 09204168 | | 698552 |
| 12788019 | | 817729 |
| 12800599 | | 817998 |
| 13106817 | | 817853 |
| 13108569 | | 734302 |
| 13108570 | | 818701 |
| 13114368 | | 696026 |
| 13114369 | | 696027 |
| 13114943 | | 817809 |
| 13128930 | | 734384 |
| 13130015 | | 734384 |
| 13130038 | | 734385 |
| 13130042 | | 734385 |
| 13143554 | | 734383 |
| 13143570 | | 734380 |
| 13145210 | | 734381 |
| 13145211 | | 734382 |
| 13145212 | | 734432 |
| 13148295 | | 734386 |
| 13152320 | | 735080 |
| 13156387 | | 734345 |
| 13167336 | | 696079 |
| 13167337 | | 696080 |
| 13167338 | | 817730 |
| 13182322 | | 696030 |
| 13182786 | | 734331 |
| 13205149 | | 818722 |
| 13217130 | | 734982 |
| 1618044 | | 812110 |
| 22061171 | | 696281 |
| 22061461 | | 696035 |
| 24402888 | | 731393 |
| 24410988 | | 698844 |

| OE | PROD | Valeo |
|---|---|---|
| **VAUXHALL(.../...)** | | |
| 24418338 | | 732879 |
| 24418340 | | 734981 |
| 24418341 | | 732876 |
| 24418343 | | 732877 |
| 24418344 | | 732878 |
| 24418345 | | 734339 |
| 24418346 | | 696024 |
| 24418347 | | 696001 |
| 24418362 | | 817647 |
| 24418363 | | 817648 |
| 24418364 | | 817852 |
| 24418365 | | 817729 |
| 24418366 | | 817697 |
| 24419326 | | 696025 |
| 24431825 | | 696173 |
| 24431828 | | 696280 |
| 24445190 | | 696282 |
| 24453597 | | 696028 |
| 24453598 | | 696029 |
| 3050602 | | 812148 |
| 3054182 | | 812150 |
| 3096385 | | 730396 |
| 52455043 | | 730993 |
| 52455192 | | 731174 |
| 52459322 | | 734271 |
| 52459323 | | 732032 |
| 52459347 | | 730993 |
| 52463043 | | 731839 |
| 52463044 | | 731839 |
| 52463045 | | 731840 |
| 52463046 | | 731840 |
| 52463053 | | 734389 |
| 52463054 | | 731843 |
| 52463287 | | 812149 |
| 52464524 | | 731847 |
| 52464573 | | 731847 |
| 52464649 | | 731846 |
| 52464745 | | 735065 |
| 52479093 | | 732349 |
| 52479098 | | 732347 |
| 52479099 | | 732347 |
| 52479100 | | 732348 |
| 52479101 | | 731847 |
| 52479103 | | 731846 |
| 52484484 | | 817670 |
| 52488365 | | 731846 |
| 52488847 | | 812146 |
| 55700406 | | 818193 |
| 55700408 | | 818192 |
| 55701408 | | 735097 |
| 55703926 | | 735040 |
| 55703927 | | 735041 |
| 90128036 | | 883751 |
| 90136753 | | 883771 |
| 90136828 | | 883767 |
| 90180560 | | 883857 |
| 90180561 | | 883858 |
| 90264491 | | 883877 |
| 90298318 | | 883920 |
| 90298560 | | 819388 |
| 90299108 | | 819389 |

| OE | PROD | Valeo |
|---|---|---|
| **VAUXHALL(.../...)** | | |
| 90323474 | | **883878** |
| 90325151 | | **730975** |
| 90325465 | | **883881** |
| 90351829 | | **883880** |
| 90352138 | | **883881** |
| 90353025 | | **731022** |
| 90353027 | | **731170** |
| 90410047 | | **731013** |
| 90410048 | | **731178** |
| 90410049 | | **731179** |
| 90412252 | | **730975** |
| 90442550 | | **730125** |
| 90442583 | | **730396** |
| 90442621 | | **731217** |
| 90442622 | | **730395** |
| 90443392 | | **730994** |
| 90443463 | | **731175** |
| 90443466 | | **730395** |
| 90443911 | | **734604** |
| 90443914 | | **734604** |
| 90444154 | | **883857** |
| 90463839 | | **812117** |
| 90467723 | | **730975** |
| 90469375 | | **730975** |
| 90499823 | | **731393** |
| 90510210 | | **696172** |
| 90510645 | | **731421** |
| 90511659 | | **816902** |
| 90511660 | | **816924** |
| 90512200 | | **812118** |
| 90528302 | | **731525** |
| 90531547 | | **732606** |
| 90541114 | | **816924** |
| 90541496 | | **734242** |
| 90570723 | | **732723** |
| 90570725 | | **732724** |
| 90570726 | | **732724** |
| 90570739 | | **696173** |
| 9108916 | | **732940** |
| 9109424 | | **817689** |
| 9109893 | | **730944** |
| 9111216 | | **732798** |
| 9111573 | | **698412** |
| 91123003 | | **731486** |
| 91146914 | | **731237** |
| 91146915 | | **735229** |
| 91147724 | | **731236** |
| 91149885 | | **731237** |
| 91153279 | | **734353** |
| 91158692 | | **812375** |
| 91166000 | | **732853** |
| 91166001 | | **732846** |
| 91166018 | | **817577** |
| 91166035 | | **817554** |
| 91168177 | | **732902** |
| 91168188 | | **817645** |
| 91168643 | | **817644** |
| 9117283 | | **812222** |
| 9118169 | | **698344** |
| 9118440 | | **812118** |
| 9119176 | | **817505** |

| OE | PROD | Valeo |
|---|---|---|
| **VAUXHALL(.../...)** | | |
| 9119481 | | **732551** |
| 9119482 | | **732549** |
| 9119483 | | **732548** |
| 9119484 | | **732550** |
| 9129965 | | **696284** |
| 9158007 | | **696283** |
| 9161147 | | **817115** |
| 9161149 | | **698412** |
| 9161208 | | **817065** |
| 9161434 | | **698424** |
| 9161437 | | **732050** |
| 9180595 | | **732607** |
| 9192578 | | **732550** |
| 9192586 | | **734322** |
| 9192587 | | **817916** |
| 9192607 | | **734388** |
| 9192937 | | **812285** |
| 9193264 | | **732551** |
| 9193265 | | **732729** |
| 9193267 | | **732548** |
| 9193268 | | **732550** |
| 9194851 | | **812126** |
| 9196140 | | **812225** |
| 9196694 | | **732824** |
| 9196705 | | **818728** |
| 9201018 | | **732548** |
| 9201955 | | **732825** |
| 9201956 | | **732826** |
| 9202491 | | **732723** |
| 9202493 | | **732795** |
| 9208632 | | **732694** |
| 9210556 | | **734330** |
| 93170608 | | **818047** |
| 93170621 | | **817505** |
| 93170622 | | **817506** |
| 93173379 | | **732825** |
| 93175260 | | **812363** |
| 93175774 | | **818118** |
| 93175776 | | **817609** |
| 93177121 | | **732549** |
| 93177215 | | **817843** |
| 93177423 | | **817844** |
| 93177424 | | **734464** |
| 93177425 | | **818809** |
| 93177593 | | **734464** |
| 93178958 | | **817839** |
| 93178960 | | **818114** |
| 93178961 | | **817847** |
| 93179354 | | **732918** |
| 93179722 | | **732917** |
| 93179729 | | **732919** |
| 93179741 | | **732919** |
| 93179776 | | **817637** |
| 93181678 | | **698424** |
| 93182213 | | **818168** |
| 93182745 | | **698412** |
| 93183711 | | **817843** |
| 93250611 | | **816902** |
| 93850451 | | **817636** |
| 93852185 | | **732902** |
| 93852186 | | **732911** |

| OE | PROD | Valeo |
|---|---|---|
| **VAUXHALL(.../...)** | | |
| 93854162 | | **818771** |
| 93854164 | | **734946** |
| 97036932 | | **731236** |
| 12805057 | | **735083** |
| 13196477 | | **735085** |
| 13241722 | | **735487** |
| 13241723 | | **735488** |
| 13241724 | | **735486** |
| 13241726 | | **735485** |
| 13241728 | | **735483** |
| 13241729 | | **735484** |
| 24402524 | | **696383** |
| 24410993 | | **696387** |
| 24421234 | | **696369** |
| 24431829 | | **696355** |
| 24445183 | | **696382** |
| 24445185 | | **696381** |
| 93857125 | | **734931** |
| **VOLVO** | | |
| 13785902 | | **732369** |
| 2832335 | | **732365** |
| 30871579 | | **817559** |
| 30897260 | | **817560** |
| 3200712 | | **812093** |
| 32119828 | | **731248** |
| 3402363 | | **812326** |
| 34467100 | | **810956** |
| 50013341 | | **810968** |
| 50030063 | | **810970** |
| 50038538 | | **732369** |
| 50038546 | | **732366** |
| 68495753 | | **817675** |
| 86010006 | | **732365** |
| 86011244 | | **810968** |
| 86011269 | | **810970** |
| 86013554 | | **732365** |
| 8601449 | | **734855** |
| 8601451 | | **734856** |
| 8601843 | | **734320** |
| 86020658 | | **732524** |
| 86021060 | | **732525** |
| 86021078 | | **732525** |
| 8602116 | | **732372** |
| 8602117 | | **732372** |
| 8602558 | | **734856** |
| 8602559 | | **734856** |
| 8602566 | | **732365** |
| 8602753 | | **735237** |
| 8603244 | | **734321** |
| 8603620 | | **734321** |
| 8603621 | | **734320** |
| 8603811 | | **734321** |
| 86038528 | | **732368** |
| 86038536 | | **732369** |
| 86038544 | | **732366** |
| 8653691 | | **817753** |
| 9031162 | | **810956** |
| 90311622 | | **810956** |
| 9031163 | | **810957** |
| 90311630 | | **810957** |
| 91442210 | | **812327** |

| OE | PROD | Valeo |
|---|---|---|
| **VOLVO(.../...)** | | |
| 9171271 | | **817675** |
| 9171503 | | **812328** |
| 36002407 | | **735490** |
| 86011251 | | **810971** |
| 86013539 | | **731477** |
| **VOLVO TRUCKS** | | |
| 3980841 | | **818987** |
| 3981637 | | **818984** |
| 1624373 | | **812345** |
| 1697358 | | **812344** |
| 3090893 | | **812343** |
| 8157212 | | **818039** |

| OE | PROD | Valeo |
|---|---|---|

| OE | PROD | Valeo |
|---|---|---|

| IAM | Valeo |
|---|---|
| **AKG** | |
| 21838 | **730152** |
| 21885 | **883857** |
| 21887 | **883856** |
| 21889 | **883859** |
| 21895 | **883767** |
| 21896 | **883771** |
| 21898 | **883858** |
| 21907 | **730395** |
| 2359041 | **883956** |
| 4762013 | **731509** |
| 4762015 | **730365** |
| 4762016 | **731520** |
| 4762017 | **819412** |
| 4762018 | **810947** |
| 4762018 | **819422** |
| 4762019 | **732198** |
| 4762020 | **819412** |
| 4762021 | **734289** |
| 4762022 | **734276** |
| 4762023 | **734276** |
| 4762024 | **734276** |
| 7930000 | **817869** |
| 217930000 | **732432** |
| 854490000 | **883863** |
| 854540000 | **883863** |
| 854610000 | **883863** |
| 854710000 | **819260** |
| 854820000 | **819259** |
| 854910000 | **731505** |
| 854990000 | **732440** |
| 855250000 | **734738** |
| 855360000 | **730349** |
| 855360000 | **730972** |
| 855370000 | **730349** |
| 855480000 | **731501** |
| 855530000 | **731428** |
| 855600000 | **730349** |
| 855660000 | **819259** |
| 855780000 | **731422** |
| 855810000 | **731429** |
| 855820000 | **731430** |
| 855840000 | **817761** |
| 855850000 | **734751** |
| 855860000 | **730363** |
| 855910000 | **731503** |
| 856340000 | **817762** |
| 856400000 | **730360** |
| 856400000 | **730361** |
| 856480000 | **731537** |
| 856480000 | **732361** |
| 856780000 | **731755** |
| 856940000 | **731756** |
| 856950000 | **731757** |
| 857170000 | **732963** |
| 857180000 | **734268** |
| 857190000 | **734269** |
| 857200000 | **734270** |
| 857310000 | **734752** |
| 857320000 | **734753** |
| 857330000 | **734754** |
| 857340000 | **734755** |
| 857350000 | **734859** |
| 857650000 | **734695** |
| 857940000 | **817867** |
| 858010000 | **732785** |
| 1007760000 | **730883** |
| 1008950000 | **731807** |
| 1008970000 | **731805** |
| 1009120000 | **730883** |
| 1009120000 | **731741** |
| 1009990000 | **817759** |
| 1010370000 | **817760** |
| 1012080000 | **732741** |
| 1012090000 | **732740** |
| 1012100000 | **731293** |
| 1012110000 | **730344** |
| 1012150000 | **819368** |
| 1012160000 | **819201** |

| IAM | Valeo |
|---|---|
| **AKG** | |
| 1012200000 | **731804** |
| 1012210000 | **731294** |
| 1012220000 | **731291** |
| 1012230000 | **883860** |
| 1012240000 | **819377** |
| 1012250000 | **883876** |
| 1910530000 | **818814** |
| 1910540000 | **818815** |
| 7270480000 | **883864** |
| 7270620000 | **730485** |
| 7270910000 | **732435** |
| 7270940000 | **734586** |
| 7271170000 | **883718** |
| 7271260000 | **883720** |
| 7271260000 | **883958** |
| 7271320000 | **730485** |
| 7271400000 | **883905** |
| 7271410000 | **883727** |
| 7271570000 | **883820** |
| 7271580000 | **883818** |
| 7271590000 | **883819** |
| 7271660000 | **883849** |
| 7271660000 | **730370** |
| 7271660000 | **731271** |
| 7271670000 | **730947** |
| 7271670000 | **731271** |
| 7271680000 | **730948** |
| 7271810000 | **883820** |
| 7272170000 | **734853** |
| 7272180000 | **883727** |
| 7272180000 | **883870** |
| 7272190000 | **883720** |
| 7272210000 | **883871** |
| 7272230000 | **732436** |
| 7272240000 | **883869** |
| 7272270000 | **817764** |
| 7272390000 | **732397** |
| 7272410000 | **732437** |
| 7272430000 | **731265** |
| 7272440000 | **731267** |
| 7272450000 | **730947** |
| 7272530000 | **732438** |
| 7272560000 | **734606** |
| 7272570000 | **731401** |
| 7272580000 | **730629** |
| 7272610000 | **730505** |
| 7272660000 | **730946** |
| 7272660000 | **816703** |
| 7272740000 | **731025** |
| 7272900000 | **731127** |
| 7272910000 | **731032** |
| 7272920000 | **730955** |
| 7273090000 | **731025** |
| 7273090000 | **731267** |
| 7273090000 | **731268** |
| 7273130000 | **730945** |
| 7273130000 | **731264** |
| 7273130000 | **731266** |
| 7273280000 | **730503** |
| 7273280000 | **730504** |
| 7273360000 | **730971** |
| 7273560000 | **730485** |
| 7273640000 | **730504** |
| 7273790000 | **731006** |
| 7273810000 | **731270** |
| 7273830000 | **817766** |
| 7273850000 | **732479** |
| 7273852000 | **732479** |
| 7273950000 | **817764** |
| 7274090000 | **817765** |
| 7274260000 | **817767** |
| 7274410000 | **732175** |
| 7274410000 | **732427** |
| 7274410000 | **731606** |
| 7274450000 | **730956** |
| 7274470000 | **731269** |
| 7274470000 | **731270** |
| 7274470000 | **731271** |

| IAM | Valeo |
|---|---|
| **AKG** | |
| 7274480000 | **731005** |
| 7274700000 | **730954** |
| 7274700000 | **730956** |
| 7274720000 | **731008** |
| 7274730000 | **731007** |
| 7275050000 | **731607** |
| 7275090000 | **731386** |
| 7275100000 | **732862** |
| 7275100000 | **732864** |
| 7275110000 | **731616** |
| 7275120000 | **732361** |
| 7275130000 | **731605** |
| 7275250000 | **730947** |
| 7275360000 | **734332** |
| 7275360000 | **734333** |
| 7275360000 | **732872** |
| 7275360000 | **734335** |
| 7275550000 | **732786** |
| 7275560000 | **732797** |
| 47620130000 | **731509** |
| 47620150000 | **730365** |
| 47620160000 | **731520** |
| 47620170000 | **819412** |
| 47620180000 | **819422** |
| 47620190000 | **732198** |
| 47620200000 | **819412** |
| 47620210000 | **734289** |
| 47620220000 | **734276** |
| 47620230000 | **734276** |
| 47620240000 | **734276** |
| 47620270000 | **817875** |
| 47620280000 | **818716** |
| 47620290000 | **818715** |
| 47620300000 | **817874** |
| 47620350000 | **818716** |
| 47620370000 | **817873** |
| 47620380000 | **817876** |
| 47620390000 | **817877** |
| 47630150000 | **816890** |
| 47630170000 | **732741** |
| 47630180000 | **732740** |
| 47630190000 | **883876** |
| 47630200000 | **730344** |
| 47630240000 | **819368** |
| 47630250000 | **819201** |
| 47630290000 | **731804** |
| 47630300000 | **731294** |
| 47630310000 | **731291** |
| 47630320000 | **883860** |
| 47630330000 | **819377** |
| 47630340000 | **731293** |
| 47640040000 | **731393** |
| 47640050000 | **731217** |
| 47640060000 | **730993** |
| 47640070000 | **730994** |
| 47640090000 | **731843** |
| 47640100000 | **731175** |
| 47640110000 | **730975** |
| 47640120000 | **731847** |
| 47640130000 | **732348** |
| 47640130000 | **731848** |
| 47640140000 | **731840** |
| 47640150000 | **731175** |
| 47640150000 | **731174** |
| 47640160000 | **731839** |
| 47640180000 | **731525** |
| 47640190000 | **732349** |
| 47640210000 | **731846** |
| 47640220000 | **731842** |
| 47640230000 | **734604** |
| 47640250000 | **734389** |
| 47640260000 | **732032** |
| 47640270000 | **883880** |
| 47640280000 | **731013** |
| 47640290000 | **732825** |
| 47640310000 | **732826** |
| 47640330000 | **732824** |
| 47640340000 | **734271** |

| IAM | Valeo |
|---|---|
| **AKG** | |
| 47640350000 | **732548** |
| 47640350000 | **732549** |
| 47640350000 | **732724** |
| 47640360000 | **732550** |
| 47640380000 | **731179** |
| 47640400000 | **732607** |
| 47670010000 | **732950** |
| 47670020000 | **732753** |
| 47670030000 | **732951** |
| 47670040000 | **732754** |
| 47670050000 | **734845** |
| 47670060000 | **731565** |
| 47670070000 | **731569** |
| 47670080000 | **731441** |
| 47670080000 | **732614** |
| 47670090000 | **731441** |
| 47670100000 | **731095** |
| 47670110000 | **731568** |
| 47670120000 | **732416** |
| 47670140000 | **732543** |
| 47680020000 | **730980** |
| 47680020000 | **731374** |
| 47680030000 | **731562** |
| 47680030000 | **732705** |
| 47680050000 | **732688** |
| 47680060000 | **731972** |
| 47680070000 | **731973** |
| 47680080000 | **734228** |
| 47680090000 | **734229** |
| 47680100000 | **730519** |
| 47680110000 | **730520** |
| 47680110000 | **730309** |
| 47680130000 | **732789** |
| 47680140000 | **731981** |
| 47680140000 | **732557** |
| 47680150000 | **732787** |
| 47680160000 | **731303** |
| 47680170000 | **732557** |
| 47680180000 | **731302** |
| 47680190000 | **731611** |
| 47680190000 | **730997** |
| 47690010000 | **730633** |
| 47690020000 | **732051** |
| 47690030000 | **731379** |
| 47690040000 | **731378** |
| 47690050000 | **883875** |
| 47690060000 | **816657** |
| 47690090000 | **731378** |
| 47690130000 | **732523** |
| 47690140000 | **732474** |
| 47690150000 | **732721** |
| 47690160000 | **732621** |
| 47690170000 | **730183** |
| 47690180000 | **819431** |
| 47690200000 | **810912** |
| 47690210000 | **730184** |
| 47690220000 | **730510** |
| 47690230000 | **816658** |
| 47690240000 | **816654** |
| 47690250000 | **816655** |
| 47690260000 | **816656** |
| 47690270000 | **730055** |
| 47690290000 | **816552** |
| 47690300000 | **730551** |
| 47690310000 | **731380** |
| 47690320000 | **732387** |
| 47690330000 | **732765** |
| 47690340000 | **730940** |
| 47690360000 | **730944** |
| 47690370000 | **732050** |
| 47850050000 | **732839** |
| 47850050000 | **732963** |
| 47850060000 | **734268** |
| 47850070000 | **734269** |
| 47850080000 | **734270** |
| 47850090000 | **731756** |
| 47850100000 | **731757** |
| 47850120000 | **732361** |

| IAM | Valeo |
|---|---|
| **AKG** | |
| 47850120000 | **731537** |
| 47850130000 | **817625** |
| 47850140000 | **730362** |
| 47850160000 | **730362** |
| 47850170000 | **734752** |
| 47850180000 | **734753** |
| 47850190000 | **734754** |
| 47850200000 | **734755** |
| 47850210000 | **734859** |
| 47850230000 | **734695** |
| 47850250000 | **818827** |
| 47850260000 | **818828** |
| 47850270000 | **817865** |
| 47850360000 | **817864** |
| 47850370000 | **818757** |
| 47850400000 | **817870** |
| 47850410000 | **817869** |
| 47850420000 | **817867** |
| 47850500000 | **732785** |
| 47870020000 | **732872** |
| 47870060000 | **731616** |
| 47870070000 | **731605** |
| 47870090000 | **732397** |
| 47870100000 | **731008** |
| 47870110000 | **731007** |
| 47870190000 | **731607** |
| 47870200000 | **731385** |
| 47870200000 | **732797** |
| 47870210000 | **731386** |
| 47870220000 | **732862** |
| 47870220000 | **732864** |
| 47870250000 | **730947** |
| 47870270000 | **817936** |
| 47870290000 | **817937** |
| 47870320000 | **818720** |
| 47870350000 | **732786** |
| 47870360000 | **731385** |
| 47880010000 | **731734** |
| 47880020000 | **883956** |
| 47880030000 | **730857** |
| 47890020000 | **731186** |
| 47890030000 | **730569** |
| 47890040000 | **730372** |
| 47890050000 | **730515** |
| 47890050000 | **730368** |
| 47890070000 | **732882** |
| 47890070000 | **731498** |
| 47890070000 | **731528** |
| 47890080000 | **732885** |
| 47890090000 | **732886** |
| 47890100000 | **732910** |
| 47890110000 | **732910** |
| 47890110000 | **734346** |
| 47890120000 | **732904** |
| 47890130000 | **732910** |
| 47890140000 | **730018** |
| 47890150000 | **810892** |
| 47890160000 | **810827** |
| 47890170000 | **730015** |
| 47890170000 | **730634** |
| 47890170000 | **731181** |
| 47890180000 | **730634** |
| 47890180000 | **810955** |
| 47890190000 | **731176** |
| 47890200000 | **730985** |
| 47890210000 | **730983** |
| 47890220000 | **730575** |
| 47890230000 | **730015** |
| 47890240000 | **810915** |
| 47890250000 | **810919** |
| 47890260000 | **730927** |
| 47890270000 | **730572** |
| 47890280000 | **730575** |
| 47890280000 | **730974** |
| 47890290000 | **730984** |
| 47900050000 | **732909** |
| 47900060000 | **732892** |
| 47900060000 | **732908** |

| IAM | Valeo |
|---|---|
| **AKG** | |
| 47900070000 | **732831** |
| 47900080000 | **732930** |
| 47900090000 | **732930** |
| 47900100000 | **732831** |
| 47900110000 | **732930** |
| 47900120000 | **732908** |
| 47900130000 | **732887** |
| 47900140000 | **732908** |
| 47900150000 | **732890** |
| 47900160000 | **732893** |
| 47900170000 | **732895** |
| 47900180000 | **732892** |
| 47900190000 | **731295** |
| 47900200000 | **734336** |
| 2359050SM | **730484** |
| **ARD-IRRADIA** | |
| ALFA50100 | **811389** |
| ALFA50200 | **811068** |
| ALFA502150 | **734733** |
| ALFA50450 | **811071** |
| ALFA50500 | **732011** |
| ALFA50720 | **816710** |
| ALFA51100 | **811010** |
| ALFA51150 | **731251** |
| ALFA51160 | **731591** |
| ALFA51170 | **731591** |
| ALFA51240 | **731283** |
| ALFA51260 | **731283** |
| ALFA51300 | **732505** |
| ALFA51350 | **731283** |
| ALFA51900 | **732012** |
| ALFA51950 | **732013** |
| ALFA52000 | **732248** |
| ALFA52100 | **732854** |
| ALFA52300 | **732722** |
| ALFA52400 | **732696** |
| ALFA5260 | **735021** |
| ALFA80600 | **817861** |
| ALFA80700 | **817862** |
| ALFA80800 | **818794** |
| AUDI5100A | **883727** |
| AUDI51300 | **819259** |
| AUDI51400 | **883863** |
| AUDI51500 | **883863** |
| AUDI51510 | **883863** |
| AUDI5152A | **731505** |
| AUDI51530 | **731760** |
| AUDI51820 | **819259** |
| AUDI5190A | **819259** |
| AUDI51950 | **730349** |
| AUDI5196A | **730349** |
| AUDI5199A | **731430** |
| AUDI52000 | **819260** |
| AUDI5201A | **819260** |
| AUDI52030 | **731428** |
| AUDI52060 | **731422** |
| AUDI5207A | **730349** |
| AUDI52080 | **731503** |
| AUDI52090 | **731429** |
| AUDI52110 | **732440** |
| AUDI52260 | **734695** |
| AUDI52280 | **730360** |
| AUDI52280 | **730361** |
| AUDI5232A | **731537** |
| AUDI5235A | **731755** |
| AUDI5236A | **732361** |
| AUDI5237A | **731756** |
| AUDI5238A | **731757** |
| AUDI5240A | **730349** |
| AUDI5241A | **730362** |
| AUDI52420 | **730362** |
| AUDI52430 | **734751** |
| AUDI52430 | **730362** |
| AUDI52430 | **730363** |
| AUDI52450 | **732811** |
| AUDI52450 | **731537** |
| AUDI52500 | **734752** |

| IAM | Valeo |
|---|---|
| **ARD-IRRADIA** | |
| AUDI52550 | **734753** |
| AUDI52600 | **734754** |
| AUDI52650 | **734755** |
| AUDI5275 | **732785** |
| AUDI5276 | **733074** |
| AUDI52800 | **732963** |
| AUDI52850 | **734269** |
| AUDI53100 | **735033** |
| AUDI53250 | **734270** |
| AUDI6040 | **817943** |
| AUDI8005A | **817625** |
| AUDI80090 | **817761** |
| AUDI80100 | **817457** |
| AUDI80120 | **817457** |
| AUDI80500 | **817864** |
| AUDI80600 | **817865** |
| AUDI80800 | **817867** |
| AUDI80850 | **817867** |
| AUDI80950 | **817869** |
| AUDI81000 | **817625** |
| AUDI81100 | **817438** |
| AUDI81200 | **817872** |
| AUDI81800 | **817653** |
| AUDI81850 | **817653** |
| AUDI82000 | **818828** |
| AUDI82500 | **817487** |
| AUDI82550 | **817488** |
| AUST5010A | **730172** |
| AUST5035A | **730172** |
| AUST50500 | **730119** |
| AUST50600 | **730119** |
| AUST5071A | **731215** |
| AUST5072A | **731243** |
| AUST5130A | **730595** |
| AUTO5010A | **883799** |
| AUTO50200 | **883799** |
| BMW5210 | **731520** |
| BMW5318A | **730365** |
| BMW5324A | **731509** |
| BMW5325A | **731508** |
| BMW53260 | **730365** |
| BMW5327A | **731520** |
| BMW53290 | **731520** |
| BMW53300 | **819414** |
| BMW53310 | **819397** |
| BMW5334A | **819397** |
| BMW53360 | **732198** |
| BMW5338A | **819415** |
| BMW5339A | **734289** |
| BMW5339A | **819414** |
| BMW53400 | **730365** |
| BMW53420 | **734289** |
| BMW53430 | **819415** |
| BMW53440 | **819412** |
| BMW5345A | **819413** |
| BMW53470 | **732456** |
| BMW53520 | **731725** |
| BMW53530 | **734301** |
| BMW53540 | **734301** |
| BMW5355A | **819412** |
| BMW5356A | **732198** |
| BMW53710 | **732199** |
| BMW53770 | **731514** |
| BMW53780 | **810947** |
| BMW53790 | **731514** |
| BMW54000 | **819422** |
| BMW5409A | **819422** |
| BMW54110 | **810947** |
| BMW54110 | **819422** |
| BMW5412A | **810947** |
| BMW5412A | **819422** |
| BMW54900 | **734276** |
| BMW55050 | **734276** |
| BMW5555A | **734615** |
| BMW5561A | **734614** |
| BMW56100 | **819418** |
| BMW5611A | **819418** |
| BMW56200 | **732099** |

| IAM | Valeo |
|---|---|
| **ARD-IRRADIA** | |
| BMW5621A | **731523** |
| BMW5621A | **732099** |
| BMW5631A | **819418** |
| BMW5660A | **735165** |
| BMW5665A | **735194** |
| BMW5675A | **735166** |
| BMW5675A | **735195** |
| BMW56800 | **731523** |
| BMW56840 | **735223** |
| BMW56840 | **735233** |
| BMW56880 | **734277** |
| BMW56890 | **734394** |
| BMW57000 | **731766** |
| BMW57100 | **734396** |
| BMW57100 | **734897** |
| BMW57150 | **734395** |
| BMW57250 | **734895** |
| BMW57300 | **734894** |
| BMW57500 | **734898** |
| BMW57600 | **735036** |
| BMW57700 | **735034** |
| BMW80100 | **817873** |
| BMW80150 | **817874** |
| BMW80200 | **817875** |
| BMW80250 | **817876** |
| BMW80350 | **817877** |
| BMW80400 | **818716** |
| BMW80450 | **818715** |
| CHRY5008A | **731148** |
| CHRY50200 | **731531** |
| CHRY5030A | **731723** |
| CHRY50400 | **731749** |
| CHRY50500 | **731579** |
| CHRY5070A | **732704** |
| CHRY50800 | **732755** |
| CHRY50900 | **732757** |
| CHRY50950 | **732756** |
| CHRY5100A | **732426** |
| CHRY51100 | **732883** |
| CHRY51400 | **732956** |
| CHRY80200 | **816959** |
| CITR50280 | **731177** |
| CITR50290 | **883866** |
| CITR50300 | **883464** |
| CITR5031A | **883866** |
| CITR50320 | **816706** |
| CITR50320 | **961149** |
| CITR50330 | **730491** |
| CITR50340 | **730491** |
| CITR50360 | **730498** |
| CITR50370 | **730632** |
| CITR50380 | **730317** |
| CITR50380 | **731498** |
| CITR50380 | **731528** |
| CITR50400 | **732807** |
| CITR50500 | **883774** |
| CITR50650 | **816715** |
| CITR50670 | **731295** |
| CITR50680 | **732564** |
| CITR50700 | **883715** |
| CITR50830 | **731296** |
| CITR50840 | **732563** |
| CITR50850 | **731173** |
| CITR50860 | **731530** |
| CITR50890 | **810811** |
| CITR5090A | **810811** |
| CITR50910 | **730635** |
| CITR50920 | **730896** |
| CITR50930 | **730897** |
| CITR5094A | **731173** |
| CITR50950 | **731527** |
| CITR50950 | **730997** |
| CITR50960 | **731527** |
| CITR5097A | **731530** |
| CITR50990 | **731165** |
| CITR51000 | **883773** |
| CITR51020 | **730494** |
| CITR51030 | **730507** |

| IAM | Valeo |
|---|---|
| **ARD-IRRADIA** | |
| CITR51040 | **816716** |
| CITR51050 | **730508** |
| CITR51060 | **731180** |
| CITR51070 | **730957** |
| CITR51080 | **730958** |
| CITR51090 | **730959** |
| CITR51100 | **730934** |
| CITR51100 | **819428** |
| CITR51110 | **730960** |
| CITR51130 | **730982** |
| CITR51140 | **731009** |
| CITR51170 | **731297** |
| CITR51190 | **731584** |
| CITR51200 | **883686** |
| CITR51220 | **731611** |
| CITR51220 | **810836** |
| CITR51240 | **731289** |
| CITR51250 | **731185** |
| CITR51270 | **732887** |
| CITR51270 | **732892** |
| CITR51290 | **734760** |
| CITR51310 | **732909** |
| CITR51330 | **730934** |
| CITR51340 | **732909** |
| CITR51350 | **732617** |
| CITR51360 | **732618** |
| CITR51380 | **732535** |
| CITR51390 | **732620** |
| CITR51400 | **734455** |
| CITR51410 | **810954** |
| CITR51450 | **732892** |
| CITR51460 | **732894** |
| CITR51460 | **734463** |
| CITR5150A | **732893** |
| CITR5151A | **730040** |
| CITR5152A | **730040** |
| CITR51550 | **732890** |
| CITR5159A | **811380** |
| CITR51610 | **811380** |
| CITR51630 | **732692** |
| CITR51640 | **731168** |
| CITR51660 | **731166** |
| CITR51680 | **731570** |
| CITR51680 | **731744** |
| CITR51690 | **731743** |
| CITR5172 | **730999** |
| CITR5173 | **730995** |
| CITR5174 | **731611** |
| CITR51750 | **731611** |
| CITR51750 | **730997** |
| CITR51780 | **731611** |
| CITR51800 | **730040** |
| CITR51800 | **883765** |
| CITR51810 | **732517** |
| CITR5182A | **732518** |
| CITR5182A | **732577** |
| CITR5182A | **734456** |
| CITR51830 | **732534** |
| CITR5190A | **730999** |
| CITR52000 | **732831** |
| CITR52000 | **732930** |
| CITR52050 | **734398** |
| CITR5210A | **732930** |
| CITR5220A | **732930** |
| CITR52200 | **732930** |
| CITR52300 | **732831** |
| CITR5240A | **732830** |
| CITR52400 | **732830** |
| CITR5241A | **732944** |
| CITR52420 | **732880** |
| CITR5245 | **732881** |
| CITR52460 | **732945** |
| CITR52500 | **731611** |
| CITR52600 | **731611** |
| CITR5280 | **735072** |
| CITR5285 | **735069** |
| CITR5295 | **735070** |
| CITR53300 | **735020** |

| IAM | Valeo |
|---|---|
| **ARD-IRRADIA** | |
| CITR60060 | **816751** |
| CITR60100 | **817704** |
| CITR60250 | **817705** |
| CITR80260 | **816823** |
| CITR80280 | **816889** |
| CITR80350 | **816919** |
| CITR80350 | **816918** |
| CITR80400 | **817651** |
| CITR80500 | **816851** |
| CITR80700 | **817845** |
| CITR80750 | **818769** |
| CITR81300 | **818853** |
| CTIR50330 | **730491** |
| DAEW5001A | **734250** |
| DAEW5005A | **734596** |
| DAEW5010A | **734248** |
| DAEW5011A | **734249** |
| DAEW5015A | **734767** |
| DAEW5016A | **734764** |
| DAEW5020A | **732483** |
| DAEW5025A | **734596** |
| DAEW5030A | **734766** |
| DAEW5031A | **734761** |
| DAEW5035A | **734252** |
| DAEW5036A | **734765** |
| DAEW5040A | **734762** |
| DAEW5050A | **734767** |
| DAEW5051A | **734764** |
| DAEW5060A | **734761** |
| DAEW5060A | **735157** |
| DAEW5064A | **735158** |
| DAEW5090A | **735159** |
| DAIH5009A | **730397** |
| DAIH5015A | **731857** |
| DAIH5016A | **734210** |
| DAIH5020A | **731020** |
| DAIH5025A | **731620** |
| DAIH5026A | **734102** |
| DAIH5030A | **731853** |
| DAIH5060A | **734209** |
| DAIH5130A | **734105** |
| DAIH5130A | **734106** |
| DAIH5171A | **735257** |
| FIAT50050 | **730519** |
| FIAT50060 | **731979** |
| FIAT50070 | **731975** |
| FIAT50080 | **731976** |
| FIAT50090 | **731977** |
| FIAT50150 | **731978** |
| FIAT50170 | **734219** |
| FIAT50700 | **883811** |
| FIAT50900 | **883428** |
| FIAT51700 | **883053** |
| FIAT52320 | **811385** |
| FIAT52320 | **811386** |
| FIAT52500 | **731972** |
| FIAT52510 | **732688** |
| FIAT52540 | **732503** |
| FIAT52550 | **732557** |
| FIAT52560 | **732557** |
| FIAT52590 | **731981** |
| FIAT52590 | **732557** |
| FIAT52600 | **731973** |
| FIAT52610 | **811069** |
| FIAT52650 | **731974** |
| FIAT52660 | **732557** |
| FIAT52670 | **734220** |
| FIAT52690 | **732218** |
| FIAT52690 | **732788** |
| FIAT52700 | **883812** |
| FIAT52700 | **883827** |
| FIAT52710 | **734768** |
| FIAT52720 | **732623** |
| FIAT5274A | **731974** |
| FIAT5274A | **734220** |
| FIAT53000 | **883806** |
| FIAT53240 | **730976** |
| FIAT53250 | **730976** |

| IAM | Valeo |
|---|---|
| **ARD-IRRADIA** | |
| FIAT53260 | **731558** |
| FIAT53300 | **730990** |
| FIAT53300 | **883813** |
| FIAT5349A | **732789** |
| FIAT53500 | **732789** |
| FIAT5351A | **730309** |
| FIAT5351A | **730520** |
| FIAT53520 | **730520** |
| FIAT5353A | **730519** |
| FIAT53570 | **734239** |
| FIAT53610 | **811071** |
| FIAT53620 | **810984** |
| FIAT53630 | **811070** |
| FIAT53650 | **731562** |
| FIAT53660 | **811071** |
| FIAT53670 | **731303** |
| FIAT5368A | **730991** |
| FIAT53690 | **731302** |
| FIAT53700 | **811387** |
| FIAT53700 | **883825** |
| FIAT53710 | **816707** |
| FIAT53720 | **731306** |
| FIAT53730 | **732812** |
| FIAT53730 | **732006** |
| FIAT53740 | **732005** |
| FIAT5375A | **732007** |
| FIAT5376A | **732147** |
| FIAT53790 | **732948** |
| FIAT53850 | **732685** |
| FIAT53920 | **731591** |
| FIAT53920 | **810949** |
| FIAT53920 | **811073** |
| FIAT53950 | **732787** |
| FIAT53950 | **734220** |
| FIAT54040 | **730838** |
| FIAT54050 | **731592** |
| FIAT54060 | **731593** |
| FIAT54210 | **811392** |
| FIAT5424A | **732705** |
| FIAT5424A | **734236** |
| FIAT54250 | **734236** |
| FIAT54250 | **730980** |
| FIAT54250 | **731375** |
| FIAT54250 | **731562** |
| FIAT54250 | **732705** |
| FIAT5427A | **730980** |
| FIAT5428A | **730981** |
| FIAT54320 | **734221** |
| FIAT5433A | **734225** |
| FIAT54340 | **734225** |
| FIAT54350 | **732578** |
| FIAT54350 | **734225** |
| FIAT5436A | **732578** |
| FIAT54370 | **734224** |
| FIAT54380 | **732913** |
| FIAT54390 | **732913** |
| FIAT54450 | **732851** |
| FIAT5446A | **732851** |
| FIAT54550 | **732923** |
| FIAT54600 | **734361** |
| FIAT5495A | **811067** |
| FIAT55100 | **734459** |
| FIAT5515 | **735040** |
| FIAT55200 | **734457** |
| FIAT55250 | **735041** |
| FIAT55300 | **734458** |
| FIAT55400 | **734361** |
| FIAT55500 | **732913** |
| FIAT5600A | **730995** |
| FIAT56100 | **735172** |
| FIAT56150 | **735172** |
| FIAT56200 | **735171** |
| FIAT56250 | **735171** |
| FIAT56300 | **730997** |
| FIAT56300 | **731611** |
| FIAT56400 | **732792** |
| FIAT56450 | **732792** |
| FIAT56500 | **734228** |

| IAM | Valeo |
|---|---|
| **ARD-IRRADIA** | |
| FIAT56600 | **734228** |
| FIAT56700 | **734229** |
| FIAT56800 | **734692** |
| FIAT56900 | **731611** |
| FIAT5700 | **732924** |
| FIAT57100 | **732925** |
| FIAT57100 | **734932** |
| FIAT57200 | **734932** |
| FIAT57300 | **734412** |
| FIAT5740 | **735097** |
| FIAT5750 | **735042** |
| FIAT57600 | **734923** |
| FIAT5765 | **734924** |
| FIAT57700 | **734932** |
| FIAT60050 | **816666** |
| FIAT80200 | **817879** |
| FIAT80550 | **817881** |
| FIAT80600 | **817632** |
| FIAT80650 | **817883** |
| FIAT80800 | **817882** |
| FIAT80900 | **818712** |
| FIAT81000 | **818725** |
| FIAT81250 | **818823** |
| FIAT81350 | **818824** |
| FIAT81400 | **817916** |
| FIAT81400 | **818722** |
| FORD5020A | **819151** |
| FORD50500 | **730110** |
| FORD5060A | **819240** |
| FORD51910 | **732731** |
| FORD5192A | **735046** |
| FORD5250A | **731992** |
| FORD5251A | **734772** |
| FORD52560 | **734392** |
| FORD52700 | **730563** |
| FORD5281A | **883954** |
| FORD5285A | **730559** |
| FORD5291A | **730857** |
| FORD5293A | **730856** |
| FORD5293A | **730858** |
| FORD5294A | **730856** |
| FORD5294A | **731300** |
| FORD5310A | **883956** |
| FORD5320A | **811046** |
| FORD5330A | **730842** |
| FORD5331A | **730116** |
| FORD5332A | **730483** |
| FORD5334A | **730484** |
| FORD5336A | **730484** |
| FORD5338A | **731735** |
| FORD5340A | **732003** |
| FORD53430 | **731734** |
| FORD5344A | **731617** |
| FORD5346A | **731736** |
| FORD5347A | **732003** |
| FORD53500 | **734272** |
| FORD53550 | **734272** |
| FORD53560 | **735045** |
| FORD53600 | **734273** |
| FORD53650 | **734273** |
| FORD53700 | **734274** |
| FORD53750 | **734274** |
| FORD5380A | **734321** |
| FORD53800 | **734320** |
| FORD5381A | **734321** |
| FORD53810 | **734321** |
| FORD5384A | **734320** |
| FORD53850 | **734319** |
| FORD53860 | **734320** |
| FORD5390A | **730631** |
| FORD5390A | **811047** |
| FORD54010 | **730631** |
| FORD5411A | **730117** |
| FORD5417A | **731595** |
| FORD5421A | **730124** |
| FORD5421A | **819176** |
| FORD54230 | **730563** |
| FORD5425A | **730123** |

| IAM | Valeo |
|---|---|
| **ARD-IRRADIA** | |
| FORD5427O | **730594** |
| FORD5432A | **730124** |
| FORD5433O | **730594** |
| FORD5434O | **734774** |
| FORD5435O | **731492** |
| FORD5436O | **731782** |
| FORD5437A | **731779** |
| FORD5438O | **732497** |
| FORD5442O | **732732** |
| FORD5443A | **732735** |
| FORD5444O | **734862** |
| FORD5480A | **730589** |
| FORD5482A | **730589** |
| FORD5482A | **731595** |
| FORD5484A | **730566** |
| FORD5485A | **730968** |
| FORD5487O | **731257** |
| FORD5487O | **734303** |
| FORD5488A | **731011** |
| FORD5488A | **731550** |
| FORD5490O | **731724** |
| FORD5520A | **730114** |
| FORD5521O | **730114** |
| FORD5550O | **734286** |
| FORD5560O | **734287** |
| FORD5570O | **734288** |
| FORD5585O | **734291** |
| FORD5586A | **734291** |
| FORD5640O | **734293** |
| FORD5645O | **734292** |
| FORD5650A | **819320** |
| FORD5685O | **734292** |
| FORD5690O | **734699** |
| FORD5695O | **734696** |
| FORD5700A | **731073** |
| FORD5735O | **731781** |
| FORD5740 | **735043** |
| FORD5745 | **735043** |
| FORD5755 | **735167** |
| FORD5780O | **735167** |
| FORD5780O | **735271** |
| FORD8060O | **818800** |
| FORD8065O | **817891** |
| FORD8070O | **817238** |
| FORD8080O | **818717** |
| FORD8090O | **818802** |
| FORD8100O | **818797** |
| FORD8110O | **818801** |
| HOND5015A | **734623** |
| HOND5020A | **730411** |
| HOND5030A | **734218** |
| HOND5042A | **730423** |
| HOND5043A | **730424** |
| HOND5044A | **731634** |
| HOND5044A | **819193** |
| HOND5045A | **730417** |
| HOND5046A | **731467** |
| HOND5047A | **734111** |
| HOND5053A | **730429** |
| HOND5070A | **730316** |
| HOND5081A | **731434** |
| HOND5081A | **731458** |
| HOND5082A | **731458** |
| HOND5083A | **731469** |
| HOND5083A | **731434** |
| HOND5084A | **731474** |
| HOND5086A | **731100** |
| HOND5086A | **731101** |
| HOND5087A | **731471** |
| HOND5088A | **734109** |
| HOND5091A | **734110** |
| HOND5096A | **734702** |
| HOND5100A | **731100** |
| HOND5101A | **732323** |
| HOND5161A | **734114** |
| HOND5162A | **734114** |
| HOND5165A | **734624** |
| HOND5165A | **731076** |

| IAM | Valeo |
|---|---|
| **ARD-IRRADIA** | |
| HOND5175A | **734112** |
| HOND5176A | **731629** |
| HOND5176A | **731630** |
| HOND5205A | **735049** |
| HOND5220A | **734476** |
| HOND5225A | **734477** |
| HOND5230A | **734703** |
| HOND5235A | **735050** |
| HOND5240A | **734716** |
| HOND5241A | **734717** |
| HOND5245A | **734113** |
| HOND5280A | **735241** |
| HOND5290A | **735238** |
| HOND5300A | **735242** |
| HYUN5070A | **734267** |
| HYUN5080A | **731454** |
| HYUN5085A | **734255** |
| HYUN5086A | **734254** |
| HYUN5095A | **732488** |
| HYUN5100A | **734256** |
| HYUN5120A | **734950** |
| HYUN5125A | **734258** |
| HYUN5135A | **732487** |
| HYUN5136A | **734261** |
| HYUN5150A | **734256** |
| HYUN5170A | **734266** |
| HYUN5171A | **734253** |
| HYUN5190A | **734784** |
| HYUN5220A | **734259** |
| HYUN5221A | **734909** |
| HYUN5230A | **734408** |
| HYUN5250A | **734905** |
| HYUN5251A | **734908** |
| IVEC5030A | **883787** |
| IVEC5040O | **811348** |
| IVEC5043O | **731572** |
| IVEC5045O | **816647** |
| IVEC5047O | **730334** |
| IVEC5065O | **734231** |
| IVEC5080O | **734449** |
| IVEC5085O | **734448** |
| IVEC8035O | **817941** |
| IVEC8070O | **818724** |
| JAGU5050O | **734785** |
| JEEP5110A | **732312** |
| JEEP5150A | **732552** |
| JEEP5215A | **732782** |
| JEEP5260A | **735222** |
| KIA5010A | **734264** |
| KIA5025A | **734265** |
| KIA5040A | **734788** |
| KIA5121A | **734949** |
| LADA5010A | **730317** |
| LANC5020O | **731980** |
| LANC5102O | **811381** |
| LANC5110O | **883809** |
| LANC5111O | **811056** |
| LANC5112O | **730319** |
| LANC5126O | **731375** |
| LANC5127A | **731374** |
| LANC5128O | **734235** |
| LANC5130O | **731281** |
| LANC5141O | **732580** |
| LANC5142O | **732582** |
| LANC5160O | **734237** |
| LANC5165O | **731282** |
| LANC5170O | **734238** |
| LANC5175O | **731276** |
| LANC5180O | **731278** |
| LANC5230O | **734363** |
| LANC5235O | **734362** |
| LANC5240O | **734364** |
| LANC5365O | **816707** |
| LANC8030O | **817896** |
| LANC8090O | **817899** |
| LANC8110O | **817901** |
| MAZD5055A | **731042** |
| MAZD5055A | **734262** |

| IAM | Valeo |
|---|---|
| **ARD-IRRADIA** | |
| MAZD5058A | **731036** |
| MAZD5095A | **732726** |
| MAZD5130A | **730435** |
| MAZD5157A | **732475** |
| MAZD5160A | **730440** |
| MAZD5162A | **731417** |
| MAZD5180A | **732538** |
| MAZD5185A | **734581** |
| MAZD5300A | **734207** |
| MAZD5348A | **734118** |
| MAZD5351A | **732345** |
| MAZD5365A | **734123** |
| MAZD5366A | **734124** |
| MAZD5370A | **734122** |
| MAZD5385A | **734126** |
| MAZD5415A | **731466** |
| MAZD5430A | **734627** |
| MAZD5440A | **734119** |
| MAZD5450A | **735053** |
| MAZD5455A | **734483** |
| MAZD5460A | **734484** |
| MAZD5470A | **734410** |
| MAZD5490 | **734468** |
| MAZD5520A | **734320** |
| MERC5010O | **810869** |
| MERC5010O | **819368** |
| MERC5019A | **819368** |
| MERC5020O | **819368** |
| MERC5025O | **731804** |
| MERC5060 | **819201** |
| MERC5061A | **819201** |
| MERC5068 | **732587** |
| MERC5149A | **819379** |
| MERC5210A | **819373** |
| MERC5220A | **819383** |
| MERC5220A | **730344** |
| MERC5235O | **731807** |
| MERC5240A | **883860** |
| MERC5241O | **883860** |
| MERC5245O | **732451** |
| MERC5249A | **819376** |
| MERC5250O | **819376** |
| MERC5259A | **819387** |
| MERC5260O | **819387** |
| MERC5261A | **819387** |
| MERC5269A | **819377** |
| MERC5270O | **819377** |
| MERC5271A | **819384** |
| MERC5274O | **732591** |
| MERC5276A | **732591** |
| MERC5277O | **819384** |
| MERC5281A | **730344** |
| MERC5291O | **732090** |
| MERC5300A | **730344** |
| MERC5310O | **883876** |
| MERC5340O | **732740** |
| MERC5340O | **732741** |
| MERC5345O | **732741** |
| MERC5346O | **732740** |
| MERC5347O | **732741** |
| MERC5348O | **732743** |
| MERC5349O | **732742** |
| MERC5361A | **732458** |
| MERC5362A | **732605** |
| MERC5369A | **734793** |
| MERC5370O | **734794** |
| MERC5371A | **734795** |
| MERC5372A | **732447** |
| MERC5373O | **734631** |
| MERC5374O | **731294** |
| MERC5375O | **732446** |
| MERC5376O | **735231** |
| MERC5377O | **732462** |
| MERC5378O | **734796** |
| MERC5381A | **731805** |
| MERC5382A | **732450** |
| MERC5384A | **731808** |
| MERC5385O | **732454** |

| IAM | Valeo |
|---|---|
| **ARD-IRRADIA** | |
| MERC5387O | **734798** |
| MERC5388O | **734799** |
| MERC5391O | **731291** |
| MERC5392O | **731292** |
| MERC5393 | **731293** |
| MERC5395O | **731808** |
| MERC5400A | **732315** |
| MERC5401O | **732442** |
| MERC5402A | **732442** |
| MERC5404O | **734801** |
| MERC5405O | **734802** |
| MERC5406O | **735234** |
| MERC5407O | **734803** |
| MERC5411O | **735230** |
| MERC5415O | **732706** |
| MERC5430O | **732736** |
| MERC5440O | **732849** |
| MERC5441A | **732849** |
| MERC5442A | **732855** |
| MERC5450O | **734805** |
| MERC5451O | **734805** |
| MERC5470O | **730883** |
| MERC5470O | **731741** |
| MERC5471O | **730883** |
| MERC5471O | **731741** |
| MERC5499A | **731294** |
| MERC5531O | **734379** |
| MERC5532O | **734378** |
| MERC5580O | **735089** |
| MERC5585O | **734926** |
| MERC5590O | **734928** |
| MERC5596O | **732459** |
| MERC5690O | **730229** |
| MERC5695O | **734674** |
| MERC5697O | **732471** |
| MERC5699O | **734806** |
| MERC5701O | **734807** |
| MERC5702O | **734669** |
| MERC5703O | **734668** |
| MERC5704O | **734749** |
| MERC5853O | **732472** |
| MERC5854O | **734689** |
| MERC5857A | **734875** |
| MERC8001O | **817903** |
| MERC8002O | **817759** |
| MERC8003O | **817905** |
| MERC8006O | **817907** |
| MERC8035O | **817760** |
| MERC8060O | **818806** |
| MERC8095O | **816890** |
| MERC8150O | **818808** |
| MERC8160O | **818807** |
| MERC8170O | **817994** |
| MG5010A | **731811** |
| MINI5010A | **734329** |
| MINI5020A | **734327** |
| MINI5030A | **734326** |
| MINI5040A | **734328** |
| MINI5050A | **734327** |
| MINI8010O | **818713** |
| MINI8020O | **818714** |
| MITS5030A | **730446** |
| MITS5040A | **730446** |
| MITS5050A | **730449** |
| MITS5074A | **731054** |
| MITS5075A | **731646** |
| MITS5076A | **731649** |
| MITS5077A | **731451** |
| MITS5077A | **732539** |
| MITS5078A | **732612** |
| MITS5078A | **732613** |
| MITS5079A | **732613** |
| MITS5081A | **819119** |
| MITS5082A | **731642** |
| MITS5084A | **731056** |
| MITS5085A | **731647** |
| MITS5086A | **734127** |
| MITS5088A | **734132** |

| IAM | Valeo |
|---|---|
| **ARD-IRRADIA** | |
| MITS5089A | **734128** |
| MITS5090A | **734145** |
| MITS5092A | **734142** |
| MITS5096A | **731462** |
| MITS5097A | **731462** |
| MITS5102A | **732524** |
| MITS5103A | **734480** |
| MITS5107A | **734809** |
| MITS5108A | **735060** |
| MITS5109A | **735058** |
| MITS5116A | **731650** |
| MITS5150A | **732748** |
| MITS5160A | **734141** |
| MITS5161A | **734141** |
| MITS5180A | **734129** |
| MITS5181A | **734129** |
| MITS5181A | **734481** |
| MITS5240A | **730454** |
| MITS5270A | **734144** |
| MITS5280A | **734424** |
| MITS5281A | **734143** |
| MITS5290A | **735059** |
| MITS5300A | **734198** |
| MITS5305A | **734197** |
| MITS5310A | **735057** |
| MITS5330A | **735055** |
| MITS5350A | **735201** |
| MITS5370A | **735198** |
| MITS5380A | **735203** |
| MITS5390A | **735202** |
| MITS5400A | **735200** |
| NISS5013A | **732405** |
| NISS5014A | **731202** |
| NISS5015A | **731670** |
| NISS5017A | **731664** |
| NISS5020O | **732903** |
| NISS5020O | **734246** |
| NISS5026O | **734247** |
| NISS5040A | **734729** |
| NISS5090A | **819219** |
| NISS5100A | **734705** |
| NISS5100A | **734736** |
| NISS5105A | **734473** |
| NISS5110A | **734737** |
| NISS5120A | **734708** |
| NISS5132A | **731090** |
| NISS5133A | **731090** |
| NISS5135A | **731193** |
| NISS5137A | **732529** |
| NISS5138A | **732528** |
| NISS5141A | **731674** |
| NISS5160A | **731656** |
| NISS5171A | **732718** |
| NISS5172A | **731287** |
| NISS5175A | **731134** |
| NISS5180A | **731187** |
| NISS5190A | **731188** |
| NISS5250A | **731654** |
| NISS5310A | **731085** |
| NISS5384A | **731261** |
| NISS5385A | **732592** |
| NISS5387O | **732592** |
| NISS5390A | **730404** |
| NISS5391A | **730406** |
| NISS5440A | **730408** |
| NISS5460A | **730407** |
| NISS5460A | **731147** |
| NISS5475A | **731087** |
| NISS5481O | **732596** |
| NISS5483A | **732596** |
| NISS5485A | **732484** |
| NISS5486O | **734671** |
| NISS5488A | **734427** |
| NISS5519O | **734819** |
| NISS5560A | **735064** |
| NISS5570A | **735081** |
| NISS5620A | **735204** |
| NISS8000O | **817640** |

| IAM | Valeo |
|---|---|
| **ARD-IRRADIA** | |
| OPEL5030A | **730152** |
| OPEL5101A | **735229** |
| OPEL5104A | **731237** |
| OPEL5107A | **734821** |
| OPEL5108A | **731236** |
| OPEL5109A | **734353** |
| OPEL5163A | **883877** |
| OPEL5164O | **883878** |
| OPEL5166O | **730975** |
| OPEL5170 | **883751** |
| OPEL5171A | **734429** |
| OPEL5172A | **734604** |
| OPEL5173A | **734604** |
| OPEL5180A | **883751** |
| OPEL5181A | **883751** |
| OPEL5190A | **883856** |
| OPEL5200A | **883857** |
| OPEL5203O | **883857** |
| OPEL5216O | **883880** |
| OPEL5217O | **883881** |
| OPEL5230O | **883767** |
| OPEL5231A | **883920** |
| OPEL5232O | **731013** |
| OPEL5233O | **731178** |
| OPEL5234A | **732606** |
| OPEL5235O | **883920** |
| OPEL5236O | **732607** |
| OPEL5237O | **732606** |
| OPEL5238O | **731170** |
| OPEL5239O | **731022** |
| OPEL5240O | **883771** |
| OPEL5241O | **731022** |
| OPEL5242A | **731170** |
| OPEL5244A | **730395** |
| OPEL5245A | **731217** |
| OPEL5246A | **731217** |
| OPEL5252A | **730993** |
| OPEL5253A | **730994** |
| OPEL5256A | **731525** |
| OPEL5257A | **731393** |
| OPEL5258O | **731846** |
| OPEL5262A | **732551** |
| OPEL5265A | **732723** |
| OPEL5266A | **732724** |
| OPEL5267A | **732549** |
| OPEL5267A | **732550** |
| OPEL5267A | **732548** |
| OPEL5268O | **734322** |
| OPEL5271A | **730125** |
| OPEL5272A | **883858** |
| OPEL5273A | **732347** |
| OPEL5274A | **731847** |
| OPEL5274A | **732347** |
| OPEL5275A | **731174** |
| OPEL5275A | **731175** |
| OPEL5276A | **731175** |
| OPEL5277O | **732348** |
| OPEL5278A | **732724** |
| OPEL5281O | **883858** |
| OPEL5285A | **732795** |
| OPEL5285A | **732549** |
| OPEL5286A | **732549** |
| OPEL5286A | **732729** |
| OPEL5290O | **883859** |
| OPEL5295O | **732694** |
| OPEL5298 | **734330** |
| OPEL5298 | **734331** |
| OPEL5305O | **731179** |
| OPEL5308A | **732032** |
| OPEL5310O | **819388** |
| OPEL5315A | **732550** |
| OPEL5320O | **819389** |
| OPEL5330O | **732349** |
| OPEL5335O | **731839** |
| OPEL5340O | **731839** |
| OPEL5343A | **730396** |
| OPEL5345A | **731839** |
| OPEL5350A | **731840** |

| IAM | Valeo |
|---|---|
| **ARD-IRRADIA** | |
| OPEL5365O | **731842** |
| OPEL5370O | **731843** |
| OPEL5385 | **732876** |
| OPEL5395 | **732877** |
| OPEL5395A | **732877** |
| OPEL5395O | **732877** |
| OPEL5396 | **732878** |
| OPEL5396A | **732878** |
| OPEL5397 | **734339** |
| OPEL5397O | **734339** |
| OPEL5398O | **734345** |
| OPEL5399O | **734302** |
| OPEL5400A | **732825** |
| OPEL5430A | **732824** |
| OPEL5440A | **732826** |
| OPEL5470A | **734384** |
| OPEL5480A | **734385** |
| OPEL5485A | **734386** |
| OPEL5490O | **734464** |
| OPEL5510 | **734381** |
| OPEL5515A | **734382** |
| OPEL5520 | **734380** |
| OPEL5545 | **734432** |
| OPEL5545A | **734432** |
| OPEL5550 | **735080** |
| OPEL5580 | **735040** |
| OPEL8040O | **817916** |
| OPEL8060 | **817917** |
| OPEL8090O | **818728** |
| OPEL8100O | **817697** |
| OPEL8105 | **817729** |
| OPEL8110O | **818759** |
| OPEL8120O | **818809** |
| OPEL8130O | **817730** |
| PEUG5010A | **810881** |
| PEUG5110O | **735068** |
| PEUG5120O | **816700** |
| PEUG5121O | **816555** |
| PEUG5122O | **816555** |
| PEUG5131O | **730366** |
| PEUG5131O | **730372** |
| PEUG5150O | **810882** |
| PEUG5160O | **810882** |
| PEUG5190O | **810882** |
| PEUG5201O | **810915** |
| PEUG5202O | **730572** |
| PEUG5203O | **810915** |
| PEUG5210A | **810892** |
| PEUG5211O | **810892** |
| PEUG5221O | **730534** |
| PEUG5270O | **730071** |
| PEUG5292O | **731526** |
| PEUG5295O | **730368** |
| PEUG5295O | **730515** |
| PEUG5296O | **730569** |
| PEUG5297A | **730569** |
| PEUG5298O | **731186** |
| PEUG5299O | **731530** |
| PEUG5301O | **816554** |
| PEUG5320O | **731527** |
| PEUG5320O | **732794** |
| PEUG5321O | **732882** |
| PEUG5325O | **731527** |
| PEUG5331O | **732520** |
| PEUG5331O | **734445** |
| PEUG5332O | **732520** |
| PEUG5335O | **730984** |
| PEUG5339O | **730927** |
| PEUG5340O | **730015** |
| PEUG5341A | **730015** |
| PEUG5342O | **730634** |
| PEUG5344O | **731176** |
| PEUG5346O | **730983** |
| PEUG5347O | **731176** |
| PEUG5348O | **730927** |
| PEUG5348O | **730985** |
| PEUG5348O | **731010** |
| PEUG5349O | **731181** |

| IAM | Valeo |
|---|---|
| **ARD-IRRADIA** | |
| PEUG5350O | **810827** |
| PEUG5351O | **730630** |
| PEUG5352A | **810827** |
| PEUG5353A | **810827** |
| PEUG5354O | **730018** |
| PEUG5355A | **731298** |
| PEUG5356O | **731389** |
| PEUG5358O | **730040** |
| PEUG5358O | **810919** |
| PEUG5359O | **810955** |
| PEUG5360A | **730018** |
| PEUG5362O | **810919** |
| PEUG5363O | **810955** |
| PEUG5364O | **730506** |
| PEUG5365O | **730512** |
| PEUG5366O | **730575** |
| PEUG5367O | **730577** |
| PEUG5368O | **730575** |
| PEUG5374O | **730953** |
| PEUG5378A | **730575** |
| PEUG5384O | **731381** |
| PEUG5385O | **731383** |
| PEUG5386O | **731384** |
| PEUG5387O | **731382** |
| PEUG5388O | **731584** |
| PEUG5389O | **731586** |
| PEUG5391O | **734411** |
| PEUG5393O | **730898** |
| PEUG5394O | **734279** |
| PEUG5397O | **732567** |
| PEUG5398O | **732598** |
| PEUG5398O | **734278** |
| PEUG5398O | **734281** |
| PEUG5399A | **734279** |
| PEUG5400O | **732885** |
| PEUG5401A | **732885** |
| PEUG5410A | **732886** |
| PEUG5420O | **732599** |
| PEUG5430O | **734338** |
| PEUG5435O | **734366** |
| PEUG5440O | **734338** |
| PEUG5443O | **734452** |
| PEUG5450O | **732910** |
| PEUG5480A | **732891** |
| PEUG5500O | **732896** |
| PEUG5510O | **732892** |
| PEUG5515O | **732895** |
| PEUG5520O | **734346** |
| PEUG5525O | **732910** |
| PEUG5530O | **732893** |
| PEUG5560O | **734346** |
| PEUG5570A | **732887** |
| PEUG5570A | **732908** |
| PEUG5570A | **732892** |
| PEUG5570A | **732890** |
| PEUG6060O | **817643** |
| PEUG8010O | **817920** |
| PEUG8030O | **817204** |
| PEUG8040O | **816918** |
| PEUG8050O | **816918** |
| PEUG8050O | **817437** |
| PEUG8060O | **817578** |
| PEUG8070O | **818822** |
| PEUG8100O | **818209** |
| PEUG8180O | **818841** |
| PEUG8190O | **818837** |
| PEUG8200O | **818836** |
| PORS5005O | **734826** |
| PORS5005O | **734827** |
| PORS5006O | **734826** |
| PORS5006O | **734827** |
| PORS5009O | **810952** |
| RENA5020O | **810926** |
| RENA5021O | **816654** |
| RENA5022O | **810887** |
| RENA5024A | **883959** |
| RENA5025A | **816656** |
| RENA5026O | **816656** |

| IAM | Valeo |
|---|---|
| **ARD-IRRADIA** | |
| RENA5030O | **883959** |
| RENA5041O | **816655** |
| RENA5045A | **810927** |
| RENA5051O | **816657** |
| RENA5070O | **810851** |
| RENA5080A | **810843** |
| RENA5111O | **883282** |
| RENA5130O | **883282** |
| RENA5130O | **810933** |
| RENA5131A | **810933** |
| RENA5131A | **883282** |
| RENA5141O | **883875** |
| RENA5142O | **810995** |
| RENA5146O | **734285** |
| RENA5160O | **883463** |
| RENA5173O | **810912** |
| RENA5174O | **816658** |
| RENA5175O | **730510** |
| RENA5177A | **730055** |
| RENA5178O | **730510** |
| RENA5179O | **730633** |
| RENA5181O | **730969** |
| RENA5182A | **731552** |
| RENA5183O | **730181** |
| RENA5184A | **732338** |
| RENA5185A | **732051** |
| RENA5186O | **732338** |
| RENA5187A | **732819** |
| RENA5188O | **731378** |
| RENA5191 | **732389** |
| RENA5191O | **732389** |
| RENA5192O | **732387** |
| RENA5192O | **732474** |
| RENA5193O | **732387** |
| RENA5194O | **732474** |
| RENA5195A | **732621** |
| RENA5195A | **732720** |
| RENA5195O | **732621** |
| RENA5195O | **732720** |
| RENA5196 | **732523** |
| RENA5196O | **732523** |
| RENA5197 | **732717** |
| RENA5197O | **732717** |
| RENA5198 | **732687** |
| RENA5200O | **883851** |
| RENA5201O | **883851** |
| RENA5202O | **883851** |
| RENA5203O | **730499** |
| RENA5204A | **730502** |
| RENA5205O | **730183** |
| RENA5207O | **730499** |
| RENA5207O | **816655** |
| RENA5208 | **731378** |
| RENA5208O | **731378** |
| RENA5209O | **730502** |
| RENA5210O | **810843** |
| RENA5211O | **730511** |
| RENA5211O | **730180** |
| RENA5212A | **730180** |
| RENA5212A | **730511** |
| RENA5215A | **731910** |
| RENA5221O | **810888** |
| RENA5222O | **810888** |
| RENA5223O | **730548** |
| RENA5226A | **731379** |
| RENA5227O | **731538** |
| RENA5228O | **731128** |
| RENA5229A | **730551** |
| RENA5232O | **810938** |
| RENA5233O | **730973** |
| RENA5234O | **730549** |
| RENA5235O | **730548** |
| RENA5239O | **731380** |
| RENA5240O | **816552** |
| RENA5242O | **730540** |
| RENA5243O | **732071** |
| RENA5245A | **732474** |
| RENA5246A | **732072** |

| IAM | Valeo |
|---|---|
| **ARD-IRRADIA** | |
| RENA5247O | **732316** |
| RENA5248O | **732559** |
| RENA5249A | **810835** |
| RENA5250O | **810835** |
| RENA5251O | **732866** |
| RENA5252O | **819431** |
| RENA5253O | **730184** |
| RENA5254O | **730185** |
| RENA5255O | **732049** |
| RENA5256 | **732917** |
| RENA5256A | **732050** |
| RENA5257O | **732817** |
| RENA5260O | **810889** |
| RENA5261A | **810889** |
| RENA5271A | **731161** |
| RENA5272O | **731162** |
| RENA5273O | **731161** |
| RENA5274O | **731161** |
| RENA5276A | **731129** |
| RENA5277A | **731529** |
| RENA5279O | **732544** |
| RENA5280O | **730940** |
| RENA5281O | **731016** |
| RENA5283O | **730940** |
| RENA5285O | **734284** |
| RENA5286O | **734284** |
| RENA5289O | **731161** |
| RENA5290O | **730140** |
| RENA5292O | **730944** |
| RENA5293A | **730140** |
| RENA5295O | **732608** |
| RENA5296O | **732940** |
| RENA5330 | **732721** |
| RENA5330O | **732721** |
| RENA5335O | **732737** |
| RENA5340O | **732798** |
| RENA5344 | **732917** |
| RENA5346O | **732918** |
| RENA5347 | **732917** |
| RENA5350O | **732827** |
| RENA5370O | **732828** |
| RENA5380O | **734828** |
| RENA5390O | **732817** |
| RENA5390O | **732946** |
| RENA5395 | **732873** |
| RENA5396O | **732874** |
| RENA5400O | **732853** |
| RENA5410 | **732846** |
| RENA5420 | **732902** |
| RENA5425 | **732911** |
| RENA5440 | **732919** |
| RENA5460O | **734462** |
| RENA5465O | **734461** |
| RENA5500 | **735134** |
| RENA5505 | **735135** |
| RENA5515 | **734922** |
| RENA6060O | **816748** |
| RENA8005O | **816755** |
| RENA8020O | **817923** |
| RENA8050O | **816610** |
| RENA8052O | **816836** |
| RENA8054O | **817924** |
| RENA8057O | **817925** |
| RENA8065O | **817926** |
| RENA8100O | **817115** |
| RENA8120O | **817927** |
| RENA8130O | **817554** |
| RENA8150O | **817636** |
| RENA8160O | **818727** |
| RENA8170O | **817654** |
| RENA8190O | **817999** |
| RENA8200O | **817828** |
| RENA8210A | **818820** |
| RENA8220O | **818772** |
| RENA8230O | **818835** |
| ROVE5004A | **731817** |
| ROVE5005A | **731412** |
| ROVE5006A | **731818** |

| IAM | Valeo |
|---|---|
| **ARD-IRRADIA** | |
| ROVE5007O | **731820** |
| ROVE5010A | **730168** |
| ROVE5012A | **731211** |
| ROVE5017A | **731815** |
| ROVE5017A | **731820** |
| ROVE5062O | **731816** |
| ROVE5063A | **731210** |
| ROVE5064A | **731212** |
| ROVE5067A | **730565** |
| ROVE5069O | **730578** |
| ROVE5080A | **731215** |
| ROVE5100O | **730591** |
| ROVE5110A | **730970** |
| ROVE5120A | **731235** |
| ROVE5125A | **731406** |
| ROVE5135A | **735224** |
| ROVE5150A | **732400** |
| ROVE5160A | **732399** |
| ROVE5180A | **731076** |
| ROVE5180A | **731817** |
| ROVE5190A | **734290** |
| ROVE5200A | **734829** |
| ROVE5215A | **731491** |
| ROVE5250A | **735052** |
| ROVE5320A | **734354** |
| SAAB5034A | **732120** |
| SAAB5035A | **732121** |
| SAAB5036A | **732122** |
| SAAB5037A | **732123** |
| SAAB5045A | **732110** |
| SAAB5070A | **810965** |
| SAAB5085A | **734714** |
| SAAB5090O | **734830** |
| SAAB5095O | **734831** |
| SAAB8050O | **817275** |
| SAAB8080O | **817729** |
| SEAT5050O | **883921** |
| SEAT5055A | **730947** |
| SEAT5055A | **730946** |
| SEAT5059O | **731264** |
| SEAT5059O | **731728** |
| SEAT5060O | **731264** |
| SEAT5060O | **731728** |
| SEAT5061O | **730947** |
| SEAT5062O | **730948** |
| SEAT5070O | **883958** |
| SEAT5080A | **730542** |
| SEAT5090O | **730945** |
| SEAT5090O | **731266** |
| SEAT5093A | **731268** |
| SEAT5093A | **731267** |
| SEAT5095A | **731265** |
| SEAT5100O | **730370** |
| SEAT5100O | **731271** |
| SEAT5110O | **731270** |
| SEAT5115O | **883727** |
| SEAT5120O | **731269** |
| SEAT5125O | **883727** |
| SEAT5130A | **732698** |
| SEAT5135A | **732710** |
| SEAT5150A | **732427** |
| SEAT5150O | **732427** |
| SEAT5195 | **883727** |
| SEAT8010O | **817766** |
| SEAT8015O | **817558** |
| SEAT8015O | **817767** |
| SKOD5020A | **730375** |
| SKOD5030O | **732479** |
| SKOD5050O | **732863** |
| SKOD5055O | **732864** |
| SMAR5010O | **734848** |
| SMAR8010O | **817931** |
| SMAR8015O | **818730** |
| SUBA5005A | **732410** |
| SUBA5006A | **734577** |
| SUBA5020A | **732410** |
| SUBA5021A | **734577** |
| SUBA5045A | **730455** |

| IAM | Valeo |
|---|---|
| **ARD-IRRADIA** | |
| SUBA5046A | **730455** |
| SUBA5046A | **731456** |
| SUBA5070A | **731438** |
| SUBA5075A | **734158** |
| SUBA5080A | **731675** |
| SUBA5085A | **734158** |
| SUBA5085A | **734212** |
| SUBA5095A | **731678** |
| SUBA5110A | **731153** |
| SUBA5120A | **735211** |
| SUBA5125A | **734465** |
| SUZU5020O | **730457** |
| SUZU5027A | **734166** |
| SUZU5028A | **734203** |
| SUZU5030A | **730456** |
| SUZU5031A | **731828** |
| SUZU5036A | **732750** |
| SUZU5038A | **734835** |
| SUZU5041A | **732750** |
| SUZU5055A | **734213** |
| SUZU5065O | **735073** |
| SUZU5075O | **734214** |
| SUZU5100O | **732719** |
| SUZU5110O | **734170** |
| SUZU5120A | **734171** |
| SUZU5130A | **734164** |
| SUZU5135A | **734165** |
| SUZU5140A | **734917** |
| SUZU5145A | **734486** |
| TOYO5040A | **730461** |
| TOYO5045A | **731713** |
| TOYO5054A | **731122** |
| TOYO5060A | **731124** |
| TOYO5070A | **732543** |
| TOYO5080A | **730466** |
| TOYO5090A | **730466** |
| TOYO5098A | **731098** |
| TOYO5099A | **731097** |
| TOYO5100A | **819123** |
| TOYO5120A | **732561** |
| TOYO5125A | **732421** |
| TOYO5130A | **730469** |
| TOYO5133A | **731106** |
| TOYO5135A | **731115** |
| TOYO5136A | **731110** |
| TOYO5136A | **731114** |
| TOYO5137A | **731565** |
| TOYO5138A | **731831** |
| TOYO5139A | **731830** |
| TOYO5141 | **731135** |
| TOYO5142A | **734839** |
| TOYO5143A | **731696** |
| TOYO5144A | **731441** |
| TOYO5145A | **731694** |
| TOYO5148A | **734181** |
| TOYO5150A | **730468** |
| TOYO5155A | **734840** |
| TOYO5156A | **734841** |
| TOYO5157A | **734842** |
| TOYO5158O | **734840** |
| TOYO5161A | **730470** |
| TOYO5163A | **730471** |
| TOYO5163A | **731119** |
| TOYO5164A | **730472** |
| TOYO5165A | **730471** |
| TOYO5166A | **731105** |
| TOYO5170A | **731698** |
| TOYO5171A | **731095** |
| TOYO5173A | **731095** |
| TOYO5176A | **731441** |
| TOYO5179A | **734916** |
| TOYO5180A | **732542** |
| TOYO5210A | **730465** |
| TOYO5212A | **731441** |
| TOYO5213A | **731464** |
| TOYO5215A | **731568** |
| TOYO5230A | **732951** |
| TOYO5231A | **732754** |

| IAM | Valeo |
|---|---|
| **ARD-IRRADIA** | |
| TOYO5235A | **734845** |
| TOYO5242A | **731682** |
| TOYO5245A | **732950** |
| TOYO5246A | **732753** |
| TOYO5261A | **731441** |
| TOYO5261A | **732614** |
| TOYO5325A | **731569** |
| TOYO5336A | **734177** |
| TOYO5337O | **734488** |
| TOYO5344A | **732476** |
| TOYO5345A | **731196** |
| TOYO5349A | **731684** |
| TOYO5350A | **734172** |
| TOYO5352A | **732413** |
| TOYO5355A | **734466** |
| TOYO5356A | **734182** |
| TOYO5358A | **734183** |
| TOYO5359A | **734397** |
| TOYO5370A | **731199** |
| TOYO5376A | **734204** |
| TOYO5380A | **732420** |
| TOYO5385A | **734850** |
| TOYO5390A | **734205** |
| TOYO5395A | **732416** |
| TOYO5400O | **735075** |
| TOYO5435A | **734199** |
| TOYO5440A | **734199** |
| TOYO5445O | **734200** |
| TOYO5450O | **734199** |
| TOYO5510O | **734191** |
| TOYO5511O | **734190** |
| TOYO5515A | **734192** |
| TOYO5540A | **734401** |
| TOYO5545A | **734490** |
| TOYO5546A | **734491** |
| TOYO5565A | **734712** |
| TOYO5571O | **734711** |
| TOYO5600A | **735215** |
| TOYO8020O | **817698** |
| VOLK5030A | **883818** |
| VOLK5095O | **731401** |
| VOLK5095O | **734606** |
| VOLK5120O | **883718** |
| VOLK5132A | **816703** |
| VOLK5133A | **730504** |
| VOLK5133A | **730503** |
| VOLK5134A | **816703** |
| VOLK5135O | **731607** |
| VOLK5145A | **731606** |
| VOLK5146O | **731606** |
| VOLK5146O | **732175** |
| VOLK5146O | **732427** |
| VOLK5156A | **732867** |
| VOLK5170O | **883820** |
| VOLK5171A | **883820** |
| VOLK5180O | **883820** |
| VOLK5181A | **883869** |
| VOLK5183A | **730956** |
| VOLK5184O | **730956** |
| VOLK5185A | **734515** |
| VOLK5225O | **730954** |
| VOLK5240O | **883727** |
| VOLK5241A | **883727** |
| VOLK5248A | **883870** |
| VOLK5249A | **883720** |
| VOLK5250O | **883720** |
| VOLK5251O | **734853** |
| VOLK5252O | **883870** |
| VOLK5255O | **730504** |
| VOLK5256O | **730505** |
| VOLK5259O | **731007** |
| VOLK5261A | **731005** |
| VOLK5270A | **730485** |
| VOLK5300O | **732435** |
| VOLK5312O | **731025** |
| VOLK5314O | **883871** |
| VOLK5315A | **883871** |
| VOLK5316O | **732438** |

| IAM | Valeo |
|---|---|
| **ARD-IRRADIA** | |
| VOLK5317A | **732437** |
| VOLK5318A | **731267** |
| VOLK5319O | **730971** |
| VOLK5322O | **732436** |
| VOLK5323A | **730955** |
| VOLK5324O | **731127** |
| VOLK5325O | **731127** |
| VOLK5326O | **731032** |
| VOLK5327O | **730955** |
| VOLK5328O | **732437** |
| VOLK5329A | **730955** |
| VOLK5330O | **734586** |
| VOLK5331A | **734606** |
| VOLK5332O | **731385** |
| VOLK5333O | **731387** |
| VOLK5334O | **731386** |
| VOLK5334O | **732790** |
| VOLK5335O | **732797** |
| VOLK5336A | **732790** |
| VOLK5336O | **732790** |
| VOLK5337A | **732786** |
| VOLK5337O | **732786** |
| VOLK5340O | **733062** |
| VOLK5364A | **731411** |
| VOLK5365A | **732397** |
| VOLK5366A | **730629** |
| VOLK5370O | **730629** |
| VOLK5380O | **731008** |
| VOLK5385O | **731605** |
| VOLK5390A | **731006** |
| VOLK5400O | **732862** |
| VOLK5420O | **734739** |
| VOLK5420O | **734740** |
| VOLK5450A | **732872** |
| VOLK5450O | **732872** |
| VOLK5455A | **734332** |
| VOLK5465A | **735120** |
| VOLK5465A | **734335** |
| VOLK5480A | **734333** |
| VOLK5530O | **734930** |
| VOLK5535O | **734927** |
| VOLK5540O | **735084** |
| VOLK8005O | **817764** |
| VOLK8010O | **817766** |
| VOLK8015O | **817764** |
| VOLK8030O | **817936** |
| VOLK8040O | **817937** |
| VOLK8045O | **817372** |
| VOLK8060O | **817486** |
| VOLK8075A | **818720** |
| VOLK8080O | **817936** |
| VOLK8090O | **817634** |
| VOLK8095O | **817635** |
| VOLK8100O | **817556** |
| VOLK8110O | **818814** |
| VOLK8115O | **818815** |
| VOLK8140O | **818795** |
| VOLK8170O | **818732** |
| VOLK8180O | **817653** |
| VOLV5007A | **810956** |
| VOLV5035A | **732524** |
| VOLV5037A | **732525** |
| VOLV5038A | **732372** |
| VOLV5061A | **810970** |
| VOLV5104A | **810957** |
| VOLV5141A | **732365** |
| VOLV5175A | **732366** |
| VOLV5190A | **732368** |
| VOLV5265A | **734720** |
| VOLV5290A | **734855** |
| VOLV5295A | **734856** |
| **AVA COOLING SYSTEMS** | |
| AB2002 | **883799** |
| AI2002 | **883863** |
| AI2019 | **730349** |
| AI2026 | **819260** |
| AI2028 | **819259** |

| IAM | Valeo |
|---|---|
| **AVA COOLING SYSTEMS** | |
| AI2030 | **883863** |
| AI2038 | **883863** |
| AI2040 | **731505** |
| AI2046 | **732440** |
| AI2047 | **730349** |
| AI2053 | **730349** |
| AI2055 | **734738** |
| AI2059 | **731501** |
| AI2060 | **731760** |
| AI2077 | **730360** |
| AI2077 | **730361** |
| AI2081 | **730362** |
| AI2082 | **730362** |
| AI2083 | **734751** |
| AI2085 | **731429** |
| AI2088 | **731430** |
| AI2089 | **731422** |
| AI2090 | **731428** |
| AI2092 | **731503** |
| AI2098 | **730972** |
| AI2099 | **734695** |
| AI2104 | **819259** |
| AI2105 | **731537** |
| AI2108 | **731537** |
| AI2122 | **731755** |
| AI2123 | **731537** |
| AI2123 | **732361** |
| AI2124 | **731756** |
| AI2125 | **731757** |
| AI2129 | **731606** |
| AI2129 | **732175** |
| AI2139 | **734752** |
| AI2155 | **731606** |
| AI2157 | **734753** |
| AI2158 | **734753** |
| AI2158 | **734859** |
| AI2189 | **732811** |
| AI2195 | **732839** |
| AI2196 | **734754** |
| AI2197 | **734755** |
| AI2201 | **732963** |
| AI2202 | **734269** |
| AI2203 | **734418** |
| AI2204 | **734419** |
| AI2205 | **734269** |
| AI2206 | **734268** |
| AI2207 | **734270** |
| AI2213 | **733074** |
| AI2220 | **732785** |
| AI2229 | **735093** |
| AI2268 | **735033** |
| AI4075 | **817624** |
| AI4086 | **817761** |
| AI4102 | **817762** |
| AI4112 | **817625** |
| AI4134 | **817631** |
| AI4136 | **817865** |
| AI4172 | **817205** |
| AI4174 | **817762** |
| AI4185 | **817457** |
| AI4186 | **817867** |
| AI4187 | **817869** |
| AI4187 | **817870** |
| AI4188 | **817870** |
| AI4191 | **817864** |
| AI4192 | **817872** |
| AI4200 | **817653** |
| AI4208 | **817488** |
| AI4216 | **817870** |
| AI4221 | **818757** |
| AI4224 | **817438** |
| AI4225 | **817625** |
| AI4248 | **818819** |
| AI4249 | **818825** |
| AI4259 | **818894** |
| AI4283 | **817487** |
| AI7504 | **698155** |
| AIA4221 | **818757** |

| IAM | Valeo |
|---|---|
| **AVA COOLING SYSTEMS** | |
| AL2005 | **816710** |
| AL2007 | **811010** |
| AL2020 | **731561** |
| AL2026 | **811389** |
| AL2029 | **732012** |
| AL2035 | **811068** |
| AL2038 | **732013** |
| AL2044 | **816710** |
| AL2048 | **811071** |
| AL2055 | **731559** |
| AL2055 | **731251** |
| AL2056 | **731283** |
| AL2057 | **732248** |
| AL2068 | **731591** |
| AL2069 | **732011** |
| AL2075 | **732505** |
| AL2076 | **731559** |
| AL2078 | **732854** |
| AL2079 | **732696** |
| AL2083 | **734733** |
| AL2084 | **734283** |
| AL2089 | **731283** |
| AL2091 | **732722** |
| AL2101 | **735021** |
| AL4042 | **817856** |
| AL4066 | **817863** |
| AL4085 | **817861** |
| AL4086 | **817862** |
| AL4096 | **818794** |
| AL7504 | **696108** |
| AL7505 | **696108** |
| AL7506 | **696108** |
| AL7507 | **696111** |
| AL7510 | **696109** |
| AL7511 | **696111** |
| AL7513 | **696113** |
| ALA4085 | **817861** |
| AU2001 | **730172** |
| AU2012 | **730172** |
| AU2013 | **730172** |
| AU2025 | **730595** |
| AU2033 | **730172** |
| AU2040 | **730578** |
| AU2041 | **730119** |
| AU2064 | **734734** |
| AU2065 | **731235** |
| AU2067 | **732758** |
| AU2067 | **732759** |
| AU2069 | **730565** |
| AU2070 | **730565** |
| AU2080 | **731215** |
| AU2081 | **731210** |
| AU2084 | **731406** |
| AU2094 | **731212** |
| AU2096 | **731211** |
| AU2097 | **732758** |
| AU2100 | **731243** |
| AU2101 | **735224** |
| AU2110 | **731815** |
| AU2111 | **731818** |
| AU2118 | **731412** |
| AU2119 | **731816** |
| AU2120 | **731817** |
| AU2121 | **734290** |
| AU2121 | **731820** |
| AU2122 | **731811** |
| AU2126 | **732402** |
| AU2133 | **730172** |
| AU2137 | **731491** |
| AU2149 | **734354** |
| AU2152 | **734829** |
| AU2153 | **731820** |
| AU2154 | **731817** |
| AU2162 | **735052** |
| AU2163 | **732399** |
| AU2164 | **732400** |
| AU4181 | **818826** |
| BW2047 | **819422** |

| IAM | Valeo |
|---|---|
| **AVA COOLING SYSTEMS** | |
| BW2055 | **819395** |
| BW2067 | **731518** |
| BW2069 | **734614** |
| BW2081 | **731509** |
| BW2082 | **731508** |
| BW2084 | **731520** |
| BW2086 | **819397** |
| BW2086 | **819414** |
| BW2087 | **819415** |
| BW2094 | **732099** |
| BW2095 | **819418** |
| BW2096 | **810947** |
| BW2097 | **819422** |
| BW2101 | **730365** |
| BW2102 | **734615** |
| BW2104 | **819414** |
| BW2106 | **731520** |
| BW2121 | **819412** |
| BW2122 | **819413** |
| BW2124 | **732198** |
| BW2125 | **731512** |
| BW2125 | **732198** |
| BW2126 | **819415** |
| BW2128 | **734615** |
| BW2133 | **732593** |
| BW2134 | **734421** |
| BW2135 | **730365** |
| BW2136 | **731514** |
| BW2138 | **819418** |
| BW2139 | **732198** |
| BW2140 | **731520** |
| BW2144 | **731514** |
| BW2145 | **732099** |
| BW2146 | **819422** |
| BW2146 | **731511** |
| BW2159 | **731523** |
| BW2163 | **732456** |
| BW2164 | **731523** |
| BW2179 | **734289** |
| BW2186 | **734301** |
| BW2194 | **819418** |
| BW2195 | **731725** |
| BW2195 | **734301** |
| BW2201 | **734301** |
| BW2202 | **731766** |
| BW2205 | **734276** |
| BW2208 | **734276** |
| BW2209 | **734276** |
| BW2222 | **732199** |
| BW2233 | **734277** |
| BW2234 | **734394** |
| BW2235 | **735223** |
| BW2235 | **735233** |
| BW2236 | **734396** |
| BW2263 | **734329** |
| BW2274 | **734896** |
| BW2275 | **734895** |
| BW2276 | **734894** |
| BW2277 | **734395** |
| BW2278 | **734276** |
| BW2284 | **734898** |
| BW2285 | **734897** |
| BW2286 | **734327** |
| BW2291 | **735166** |
| BW2291 | **735195** |
| BW2292 | **735166** |
| BW2293 | **735165** |
| BW2310 | **734326** |
| BW4130 | **817873** |
| BW4177 | **817387** |
| BW4193 | **817875** |
| BW4207 | **817874** |
| BW4253 | **817877** |
| BW4260 | **817876** |
| BW4262 | **818713** |
| BW4265 | **818714** |
| BW4280 | **818715** |
| BW4282 | **818716** |

| IAM | Valeo |
|---|---|
| **AVA COOLING SYSTEMS** | |
| BW4346 | **818796** |
| BW7509 | **696120** |
| BW7510 | **696121** |
| BW7528 | **696275** |
| CN2001 | **883464** |
| CN2002 | **883715** |
| CN2005 | **883686** |
| CN2007 | **810811** |
| CN2010 | **810836** |
| CN2011 | **883773** |
| CN2013 | **883774** |
| CN2027 | **883866** |
| CN2028 | **810954** |
| CN2033 | **730897** |
| CN2034 | **730896** |
| CN2035 | **730635** |
| CN2036 | **816554** |
| CN2037 | **819428** |
| CN2040 | **816706** |
| CN2041 | **961149** |
| CN2042 | **819428** |
| CN2044 | **730507** |
| CN2046 | **730491** |
| CN2047 | **730491** |
| CN2049 | **730498** |
| CN2051 | **730494** |
| CN2057 | **816716** |
| CN2059 | **816715** |
| CN2060 | **730508** |
| CN2062 | **734454** |
| CN2063 | **730934** |
| CN2064 | **730959** |
| CN2065 | **730958** |
| CN2066 | **730958** |
| CN2067 | **730960** |
| CN2068 | **730957** |
| CN2070 | **730632** |
| CN2071 | **730982** |
| CN2072 | **731009** |
| CN2073 | **731173** |
| CN2074 | **731185** |
| CN2077 | **731165** |
| CN2078 | **731166** |
| CN2079 | **731166** |
| CN2080 | **731177** |
| CN2089 | **731168** |
| CN2101 | **731297** |
| CN2102 | **731289** |
| CN2103 | **731383** |
| CN2104 | **731298** |
| CN2105 | **731381** |
| CN2106 | **731382** |
| CN2107 | **731384** |
| CN2108 | **731181** |
| CN2109 | **731180** |
| CN2110 | **731176** |
| CN2111 | **731176** |
| CN2112 | **731181** |
| CN2113 | **731180** |
| CN2114 | **731176** |
| CN2115 | **731498** |
| CN2115 | **731528** |
| CN2116 | **731527** |
| CN2117 | **731527** |
| CN2118 | **731526** |
| CN2119 | **731527** |
| CN2120 | **731530** |
| CN2121 | **731391** |
| CN2123 | **731389** |
| CN2127 | **731744** |
| CN2132 | **731584** |
| CN2133 | **731584** |
| CN2137 | **731570** |
| CN2140 | **731296** |
| CN2142 | **731743** |
| CN2144 | **734760** |
| CN2145 | **731570** |
| CN2147 | **731743** |

| IAM | Valeo |
|---|---|
| **AVA COOLING SYSTEMS** | |
| CN2148 | **731744** |
| CN2149 | **731295** |
| CN2151 | **732577** |
| CN2152 | **732518** |
| CN2153 | **732517** |
| CN2154 | **732534** |
| CN2155 | **732535** |
| CN2156 | **732520** |
| CN2157 | **732520** |
| CN2159 | **732620** |
| CN2165 | **734455** |
| CN2167 | **732564** |
| CN2168 | **732563** |
| CN2169 | **732620** |
| CN2171 | **732618** |
| CN2182 | **732617** |
| CN2187 | **732831** |
| CN2188 | **732831** |
| CN2189 | **732930** |
| CN2190 | **732930** |
| CN2193 | **732565** |
| CN2194 | **732517** |
| CN2195 | **734456** |
| CN2196 | **731527** |
| CN2197 | **731527** |
| CN2198 | **731570** |
| CN2199 | **734445** |
| CN2206 | **732807** |
| CN2208 | **732692** |
| CN2227 | **732930** |
| CN2228 | **735068** |
| CN2236 | **731495** |
| CN4043 | **816699** |
| CN4050 | **816889** |
| CN4081 | **816823** |
| CN4083 | **816789** |
| CN4086 | **816851** |
| CN4126 | **816918** |
| CN4130 | **816919** |
| CN4212 | **817651** |
| CN4267 | **818227** |
| CN4268 | **818769** |
| CN4269 | **817706** |
| CN7520 | **698342** |
| CNA4126 | **816918** |
| CR2011 | **731148** |
| CR2028 | **731723** |
| CR2029 | **731723** |
| CR2031 | **732426** |
| CR2032 | **731578** |
| CR2033 | **731531** |
| CR2034 | **731579** |
| CR2055 | **731749** |
| CR2072 | **732704** |
| CR2076 | **732755** |
| CR2077 | **732757** |
| CR2080 | **732883** |
| CR2081 | **732756** |
| CR4002 | **816791** |
| CR4035 | **816959** |
| CR4056 | **817285** |
| CR4096 | **817736** |
| DF4005 | **817369** |
| DF4009 | **817368** |
| DF4012 | **816784** |
| DF4018 | **816793** |
| DN2013 | **819219** |
| DN2024 | **731077** |
| DN2034 | **731134** |
| DN2041 | **731085** |
| DN2046 | **730404** |
| DN2048 | **730408** |
| DN2049 | **731082** |
| DN2050 | **731082** |
| DN2054 | **731147** |
| DN2064 | **731085** |
| DN2065 | **731188** |
| DN2066 | **731188** |

| IAM | Valeo |
|---|---|
| **AVA COOLING SYSTEMS** | |
| DN2074 | **731657** |
| DN2078 | **731654** |
| DN2081 | **730406** |
| DN2084 | **730407** |
| DN2085 | **731661** |
| DN2086 | **731083** |
| DN2088 | **732596** |
| DN2092 | **731193** |
| DN2094 | **731090** |
| DN2096 | **731090** |
| DN2098 | **731087** |
| DN2101 | **731187** |
| DN2102 | **731202** |
| DN2111 | **732589** |
| DN2113 | **734819** |
| DN2116 | **731670** |
| DN2117 | **731662** |
| DN2122 | **731202** |
| DN2123 | **731664** |
| DN2126 | **731674** |
| DN2128 | **732718** |
| DN2130 | **732718** |
| DN2131 | **731287** |
| DN2135 | **734151** |
| DN2143 | **731261** |
| DN2144 | **731656** |
| DN2148 | **732592** |
| DN2155 | **732484** |
| DN2156 | **734671** |
| DN2173 | **734427** |
| DN2174 | **732405** |
| DN2179 | **732529** |
| DN2181 | **732528** |
| DN2196 | **734215** |
| DN2206 | **734446** |
| DN2210 | **734246** |
| DN2211 | **734247** |
| DN2215 | **734705** |
| DN2215 | **734736** |
| DN2216 | **734708** |
| DN2218 | **734473** |
| DN2220 | **734729** |
| DN2221 | **734737** |
| DN2223 | **734706** |
| DN2235 | **732903** |
| DN2237 | **735061** |
| DN2238 | **735063** |
| DN2239 | **735064** |
| DN2240 | **735062** |
| DN2241 | **735081** |
| DN2249 | **732903** |
| DN2250 | **732903** |
| DN2266 | **735350** |
| DN2278 | **735119** |
| DN2279 | **735118** |
| DN2280 | **735116** |
| DN2287 | **735114** |
| DN2288 | **735115** |
| DN2292 | **735205** |
| DN2300 | **731785** |
| DU2005 | **731625** |
| DU2005 | **734101** |
| DU2008 | **730397** |
| DU2011 | **731623** |
| DU2012 | **731622** |
| DU2013 | **731856** |
| DU2014 | **731019** |
| DU2024 | **731853** |
| DU2025 | **734104** |
| DU2033 | **731620** |
| DU2034 | **731020** |
| DU2035 | **731857** |
| DU2035 | **734210** |
| DU2036 | **734209** |
| DU2045 | **731857** |
| DU2046 | **734105** |
| DU2047 | **734106** |
| DU2049 | **734208** |

| IAM | Valeo |
|---|---|
| **AVA COOLING SYSTEMS** | |
| DU2053 | **734102** |
| DU2054 | **734103** |
| DW2001 | **732483** |
| DW2002 | **734596** |
| DW2003 | **734596** |
| DW2004 | **734766** |
| DW2005 | **734761** |
| DW2007 | **734250** |
| DW2009 | **734252** |
| DW2010 | **734765** |
| DW2014 | **734248** |
| DW2015 | **734249** |
| DW2016 | **734767** |
| DW2017 | **734764** |
| DW2046 | **734251** |
| DW2052 | **734762** |
| DW2053 | **735266** |
| DW2066 | **735157** |
| DW2067 | **735158** |
| FD2001 | **819151** |
| FD2004 | **730842** |
| FD2005 | **730631** |
| FD2006 | **811046** |
| FD2008 | **883954** |
| FD2010 | **811046** |
| FD2014 | **819240** |
| FD2035 | **730114** |
| FD2044 | **883956** |
| FD2047 | **811047** |
| FD2048 | **730116** |
| FD2058 | **730856** |
| FD2059 | **731300** |
| FD2060 | **730589** |
| FD2067 | **734774** |
| FD2078 | **730117** |
| FD2085 | **730124** |
| FD2085 | **819176** |
| FD2102 | **730123** |
| FD2112 | **730563** |
| FD2117 | **730483** |
| FD2121 | **730594** |
| FD2122 | **730566** |
| FD2123 | **730590** |
| FD2127 | **730484** |
| FD2139 | **730968** |
| FD2140 | **730566** |
| FD2149 | **730857** |
| FD2150 | **730857** |
| FD2151 | **730858** |
| FD2152 | **730856** |
| FD2158 | **731595** |
| FD2165 | **731011** |
| FD2165 | **731550** |
| FD2165 | **732628** |
| FD2168 | **731492** |
| FD2169 | **730124** |
| FD2172 | **730484** |
| FD2173 | **730856** |
| FD2185 | **731257** |
| FD2193 | **730563** |
| FD2195 | **734428** |
| FD2196 | **731724** |
| FD2197 | **731724** |
| FD2198 | **730559** |
| FD2201 | **731781** |
| FD2202 | **734862** |
| FD2203 | **731779** |
| FD2204 | **731782** |
| FD2217 | **731735** |
| FD2218 | **731734** |
| FD2219 | **731736** |
| FD2220 | **731617** |
| FD2224 | **732003** |
| FD2225 | **732003** |
| FD2226 | **731724** |
| FD2236 | **734273** |
| FD2257 | **731992** |
| FD2260 | **734772** |

| IAM | Valeo |
|---|---|
| **AVA COOLING SYSTEMS** | |
| FD2261 | **732497** |
| FD2263 | **732731** |
| FD2264 | **732732** |
| FD2265 | **732735** |
| FD2266 | **731257** |
| FD2318 | **734292** |
| FD2319 | **734293** |
| FD2320 | **734291** |
| FD2324 | **734272** |
| FD2325 | **734273** |
| FD2326 | **734274** |
| FD2335 | **734286** |
| FD2336 | **734287** |
| FD2337 | **734696** |
| FD2338 | **734288** |
| FD2346 | **734468** |
| FD2368 | **734319** |
| FD2369 | **734320** |
| FD2370 | **734321** |
| FD2373 | **734392** |
| FD2376 | **734699** |
| FD2376 | **735048** |
| FD2379 | **735046** |
| FD2381 | **735043** |
| FD2382 | **735043** |
| FD2396 | **732791** |
| FD2400 | **735045** |
| FD2404 | **735271** |
| FD2411 | **735167** |
| FD4308 | **817885** |
| FD4309 | **817887** |
| FD4313 | **817888** |
| FD4313 | **818210** |
| FD4314 | **818800** |
| FD4315 | **817891** |
| FD4341 | **817238** |
| FD4354 | **818718** |
| FD4366 | **818717** |
| FD4385 | **818802** |
| FD4401 | **818797** |
| FD4406 | **818801** |
| FD7505 | **696149** |
| FD7507 | **696150** |
| FD7508 | **696151** |
| FD7509 | **696152** |
| FD7510 | **696153** |
| FD7511 | **696154** |
| FD7516 | **696157** |
| FD7525 | **696159** |
| FD7526 | **696160** |
| FD7530 | **696150** |
| FDA4309 | **817887** |
| FDA4313 | **817888** |
| FDA4315 | **817891** |
| FT2012 | **883428** |
| FT2025 | **883053** |
| FT2028 | **883053** |
| FT2038 | **883811** |
| FT2039 | **883812** |
| FT2040 | **730990** |
| FT2040 | **883813** |
| FT2047 | **883806** |
| FT2056 | **883825** |
| FT2056 | **811387** |
| FT2058 | **811067** |
| FT2059 | **883827** |
| FT2066 | **731591** |
| FT2074 | **811392** |
| FT2076 | **811385** |
| FT2077 | **811386** |
| FT2078 | **811387** |
| FT2094 | **811071** |
| FT2095 | **811073** |
| FT2096 | **810949** |
| FT2096 | **731591** |
| FT2097 | **816707** |
| FT2099 | **811073** |
| FT2100 | **811069** |

| IAM | Valeo |
|---|---|
| **AVA COOLING SYSTEMS** | |
| FT2101 | **811070** |
| FT2109 | **811071** |
| FT2115 | **730309** |
| FT2115 | **730520** |
| FT2120 | **811070** |
| FT2122 | **730991** |
| FT2132 | **730519** |
| FT2137 | **731972** |
| FT2138 | **730976** |
| FT2139 | **731562** |
| FT2140 | **731562** |
| FT2140 | **732705** |
| FT2141 | **730980** |
| FT2142 | **730980** |
| FT2143 | **730981** |
| FT2147 | **731977** |
| FT2148 | **731976** |
| FT2149 | **731975** |
| FT2158 | **731302** |
| FT2159 | **734239** |
| FT2160 | **731304** |
| FT2161 | **731303** |
| FT2162 | **731306** |
| FT2166 | **731979** |
| FT2167 | **731972** |
| FT2180 | **731973** |
| FT2181 | **731978** |
| FT2182 | **731981** |
| FT2182 | **732557** |
| FT2184 | **732688** |
| FT2185 | **731974** |
| FT2188 | **732787** |
| FT2190 | **731592** |
| FT2199 | **734219** |
| FT2200 | **734221** |
| FT2201 | **732557** |
| FT2207 | **734220** |
| FT2208 | **734225** |
| FT2209 | **732578** |
| FT2210 | **732913** |
| FT2211 | **734224** |
| FT2212 | **732913** |
| FT2218 | **732578** |
| FT2224 | **732006** |
| FT2225 | **732005** |
| FT2226 | **732007** |
| FT2227 | **732623** |
| FT2228 | **731558** |
| FT2229 | **732503** |
| FT2230 | **732218** |
| FT2232 | **732147** |
| FT2233 | **732788** |
| FT2235 | **731593** |
| FT2236 | **732685** |
| FT2239 | **732789** |
| FT2243 | **734228** |
| FT2244 | **734229** |
| FT2250 | **734692** |
| FT2251 | **734228** |
| FT2258 | **732792** |
| FT2260 | **734768** |
| FT2261 | **735171** |
| FT2262 | **735171** |
| FT2263 | **735172** |
| FT2264 | **735172** |
| FT2268 | **732557** |
| FT2270 | **734220** |
| FT2275 | **732851** |
| FT2279 | **734361** |
| FT2281 | **734459** |
| FT2290 | **734457** |
| FT2291 | **732924** |
| FT2292 | **732925** |
| FT2294 | **732925** |
| FT2295 | **734932** |
| FT2296 | **732924** |
| FT2297 | **734458** |
| FT2299 | **732923** |

| IAM | Valeo |
|---|---|
| **AVA COOLING SYSTEMS** | |
| FT2300 | **734363** |
| FT2301 | **732913** |
| FT2308 | **734362** |
| FT2311 | **735040** |
| FT2312 | **735041** |
| FT2317 | **732557** |
| FT2318 | **735042** |
| FT2322 | **731592** |
| FT2323 | **732004** |
| FT2336 | **732948** |
| FT2338 | **734412** |
| FT4005 | **817896** |
| FT4110 | **817898** |
| FT4111 | **817895** |
| FT4112 | **817880** |
| FT4113 | **816763** |
| FT4114 | **816764** |
| FT4189 | **817884** |
| FT4252 | **817879** |
| FT4267 | **817881** |
| FT4269 | **817883** |
| FT4271 | **818712** |
| FT4274 | **818725** |
| FT4280 | **817882** |
| FT4309 | **818726** |
| FT4319 | **818823** |
| FT4320 | **818224** |
| FT4321 | **818824** |
| FT4337 | **818229** |
| FT4353 | **818897** |
| FT4360 | **818897** |
| FT7283 | **696095** |
| FT7284 | **698179** |
| FT7285 | **698178** |
| FT7504 | **698178** |
| FT7506 | **698179** |
| FT7507 | **698484** |
| FT7510 | **696098** |
| FT7512 | **698562** |
| FT7519 | **696197** |
| FT7520 | **698484** |
| FT7521 | **696102** |
| FT7523 | **698483** |
| FT7524 | **696106** |
| FT7525 | **698786** |
| FT7528 | **698788** |
| FT7543 | **696100** |
| FT7545 | **696100** |
| FT7550 | **696095** |
| FT7553 | **698483** |
| FTA4267 | **817881** |
| FTA4337 | **818229** |
| HD2003 | **730411** |
| HD2010 | **731471** |
| HD2011 | **731101** |
| HD2016 | **732323** |
| HD2016 | **731076** |
| HD2017 | **731100** |
| HD2017 | **731101** |
| HD2018 | **730168** |
| HD2020 | **731434** |
| HD2021 | **731458** |
| HD2025 | **730316** |
| HD2031 | **731434** |
| HD2032 | **730316** |
| HD2036 | **730591** |
| HD2037 | **730970** |
| HD2037 | **730591** |
| HD2038 | **731467** |
| HD2039 | **734111** |
| HD2040 | **730423** |
| HD2041 | **730423** |
| HD2041 | **730424** |
| HD2043 | **731635** |
| HD2045 | **730417** |
| HD2048 | **819193** |
| HD2050 | **731634** |
| HD2051 | **731635** |

| IAM | Valeo |
|---|---|
| **AVA COOLING SYSTEMS** | |
| HD2053 | **730424** |
| HD2054 | **730424** |
| HD2055 | **730430** |
| HD2056 | **730429** |
| HD2058 | **731467** |
| HD2059 | **731467** |
| HD2059 | **734111** |
| HD2063 | **730429** |
| HD2064 | **731635** |
| HD2067 | **731434** |
| HD2068 | **731473** |
| HD2069 | **731459** |
| HD2070 | **731471** |
| HD2071 | **734109** |
| HD2072 | **734623** |
| HD2073 | **731630** |
| HD2074 | **731629** |
| HD2075 | **731469** |
| HD2076 | **731474** |
| HD2078 | **734624** |
| HD2080 | **731434** |
| HD2094 | **734747** |
| HD2100 | **734113** |
| HD2102 | **734114** |
| HD2104 | **734110** |
| HD2110 | **734112** |
| HD2113 | **734723** |
| HD2114 | **734723** |
| HD2118 | **734716** |
| HD2119 | **734717** |
| HD2120 | **731434** |
| HD2121 | **731434** |
| HD2122 | **731458** |
| HD2122 | **731473** |
| HD2123 | **731459** |
| HD2161 | **734218** |
| HD2162 | **734476** |
| HD2163 | **734477** |
| HD2166 | **734478** |
| HD2170 | **734703** |
| HD2176 | **734114** |
| HD2177 | **735050** |
| HD2179 | **735049** |
| HD2187 | **735238** |
| HD2188 | **735241** |
| HD2190 | **735242** |
| HY2005 | **734267** |
| HY2006 | **731454** |
| HY2022 | **734256** |
| HY2029 | **734587** |
| HY2031 | **734256** |
| HY2033 | **734261** |
| HY2043 | **734950** |
| HY2044 | **734258** |
| HY2044 | **734950** |
| HY2047 | **732488** |
| HY2049 | **734408** |
| HY2051 | **734255** |
| HY2052 | **734254** |
| HY2053 | **734408** |
| HY2056 | **732487** |
| HY2085 | **734266** |
| HY2086 | **734253** |
| HY2086 | **734960** |
| HY2095 | **734903** |
| HY2096 | **735606** |
| HY2105 | **734965** |
| HY2107 | **734949** |
| HY2108 | **734784** |
| HY2109 | **734259** |
| HY2110 | **734909** |
| HY2113 | **734905** |
| HY2114 | **734908** |
| HY2125 | **735589** |
| HY2130 | **735563** |
| HY2179 | **735564** |
| HY2188 | **735586** |
| HY2192 | **735562** |

| IAM | Valeo |
|---|---|
| **AVA COOLING SYSTEMS** | |
| IV2020 | **816646** |
| IV2022 | **816649** |
| IV2023 | **816647** |
| IV2024 | **816647** |
| IV2026 | **883787** |
| IV2028 | **883787** |
| IV2035 | **731572** |
| IV2043 | **734231** |
| IV2056 | **734449** |
| IV2057 | **734448** |
| IV4004 | **816732** |
| IV4005 | **816731** |
| IV4016 | **816846** |
| IV4021 | **817941** |
| IV4030 | **817941** |
| IV4045 | **818724** |
| IV4054 | **816736** |
| IV4055 | **816733** |
| IV4067 | **818735** |
| IV4069 | **818736** |
| IV4071 | **818751** |
| IV4079 | **818778** |
| IV4091 | **818779** |
| IV4101 | **818777** |
| IVA4045 | **818724** |
| JE2001 | **732552** |
| JE2016 | **732312** |
| JR2037 | **734785** |
| JR4042 | **818804** |
| KA2017 | **734265** |
| KA2022 | **734788** |
| KA2033 | **734953** |
| KA2036 | **734953** |
| KA2050 | **735078** |
| LA2008 | **730317** |
| LC2002 | **883809** |
| LC2018 | **811381** |
| LC2025 | **811056** |
| LC2033 | **810984** |
| LC2036 | **730319** |
| LC2049 | **816707** |
| LC2050 | **730838** |
| LC2053 | **731282** |
| LC2054 | **731276** |
| LC2056 | **731281** |
| LC2059 | **731278** |
| LC2065 | **731375** |
| LC2066 | **731375** |
| LC2067 | **731374** |
| LC2072 | **731980** |
| LC2076 | **732580** |
| LC2077 | **732582** |
| LC2079 | **732584** |
| LC2081 | **734237** |
| LC2082 | **734236** |
| LC2083 | **734238** |
| LC2084 | **734235** |
| LC2088 | **734364** |
| LC4041 | **817897** |
| LC4043 | **817871** |
| LC4085 | **817901** |
| LC4086 | **817900** |
| LC4087 | **817899** |
| MC2002 | **734848** |
| MC4003 | **817931** |
| MC4004 | **818730** |
| ME4166 | **818752** |
| ME4172 | **818753** |
| ME4178 | **817265** |
| ME4178 | **818781** |
| ME4179 | **817264** |
| ME4181 | **818755** |
| ME4185 | **818737** |
| ME4196 | **816786** |
| ME4220 | **816795** |
| ME4223 | **818782** |
| ME4224 | **817281** |
| ME4241 | **818774** |

| IAM | Valeo |
|---|---|
| **AVA COOLING SYSTEMS** | |
| ME4245 | **816915** |
| MEA4178 | **817265** |
| MEA4178 | **818781** |
| MEA4196 | **816786** |
| MN4002 | **818744** |
| MN4009 | **818740** |
| MN4017 | **818741** |
| MN4018 | **818741** |
| MN4025 | **818743** |
| MN4027 | **818744** |
| MN4033 | **817289** |
| MN4034 | **818746** |
| MN4035 | **818747** |
| MN4036 | **817295** |
| MN4037 | **818749** |
| MS2038 | **732459** |
| MS2039 | **810869** |
| MS2039 | **819368** |
| MS2041 | **819379** |
| MS2064 | **819368** |
| MS2065 | **819373** |
| MS2066 | **819201** |
| MS2067 | **883860** |
| MS2068 | **819387** |
| MS2072 | **819377** |
| MS2080 | **819383** |
| MS2085 | **730883** |
| MS2085 | **731741** |
| MS2096 | **819384** |
| MS2100 | **730344** |
| MS2110 | **819376** |
| MS2116 | **732460** |
| MS2120 | **732454** |
| MS2127 | **732442** |
| MS2128 | **730344** |
| MS2129 | **734795** |
| MS2131 | **734794** |
| MS2132 | **734793** |
| MS2144 | **732447** |
| MS2145 | **734798** |
| MS2147 | **731808** |
| MS2148 | **732460** |
| MS2150 | **731804** |
| MS2151 | **734631** |
| MS2154 | **732458** |
| MS2156 | **731807** |
| MS2163 | **819379** |
| MS2174 | **731805** |
| MS2175 | **730344** |
| MS2177 | **732605** |
| MS2178 | **732591** |
| MS2181 | **730229** |
| MS2182 | **732472** |
| MS2189 | **731294** |
| MS2190 | **731292** |
| MS2191 | **731293** |
| MS2192 | **731291** |
| MS2208 | **732446** |
| MS2209 | **735231** |
| MS2211 | **883876** |
| MS2212 | **732450** |
| MS2213 | **734674** |
| MS2214 | **731294** |
| MS2216 | **732471** |
| MS2228 | **732462** |
| MS2229 | **732451** |
| MS2234 | **731805** |
| MS2236 | **819387** |
| MS2237 | **734799** |
| MS2243 | **734806** |
| MS2246 | **732587** |
| MS2248 | **732587** |
| MS2254 | **732587** |
| MS2264 | **734749** |
| MS2265 | **734668** |
| MS2271 | **732315** |
| MS2286 | **732741** |
| MS2287 | **734803** |

| IAM | Valeo |
|---|---|
| **AVA COOLING SYSTEMS** | |
| MS2300 | **734689** |
| MS2301 | **734801** |
| MS2304 | **734796** |
| MS2308 | **734802** |
| MS2309 | **735234** |
| MS2311 | **735230** |
| MS2316 | **733432** |
| MS2331 | **732736** |
| MS2332 | **732706** |
| MS2335 | **734807** |
| MS2336 | **734669** |
| MS2338 | **732742** |
| MS2339 | **732743** |
| MS2342 | **734805** |
| MS2343 | **734875** |
| MS2348 | **734876** |
| MS2349 | **734877** |
| MS2350 | **734878** |
| MS2364 | **734378** |
| MS2364 | **734379** |
| MS2394 | **732849** |
| MS4217 | **816890** |
| MS4224 | **817905** |
| MS4261 | **817759** |
| MS4285 | **817903** |
| MS4295 | **817902** |
| MS4296 | **817907** |
| MS4297 | **817760** |
| MS4315 | **817911** |
| MS4354 | **818731** |
| MS4357 | **817908** |
| MS4368 | **818806** |
| MS4370 | **818808** |
| MS4371 | **818807** |
| MS4379 | **818821** |
| MS4380 | **818805** |
| MS4396 | **817994** |
| MS4410 | **817913** |
| MS7511 | **696129** |
| MS7520 | **696063** |
| MS7521 | **696062** |
| MSA4217 | **816890** |
| MSA4224 | **817905** |
| MSA4295 | **817902** |
| MSA4296 | **817907** |
| MSA4297 | **817760** |
| MT2003 | **730446** |
| MT2007 | **730449** |
| MT2009 | **730446** |
| MT2016 | **732540** |
| MT2027 | **730454** |
| MT2030 | **731642** |
| MT2034 | **819119** |
| MT2036 | **731647** |
| MT2042 | **731056** |
| MT2046 | **731054** |
| MT2049 | **730454** |
| MT2050 | **730454** |
| MT2064 | **732539** |
| MT2068 | **731646** |
| MT2077 | **731451** |
| MT2078 | **731649** |
| MT2080 | **731462** |
| MT2081 | **734136** |
| MT2082 | **731639** |
| MT2083 | **731638** |
| MT2084 | **731641** |
| MT2085 | **731640** |
| MT2087 | **734142** |
| MT2089 | **734809** |
| MT2091 | **731650** |
| MT2101 | **732524** |
| MT2109 | **732748** |
| MT2110 | **734145** |
| MT2111 | **732524** |
| MT2112 | **734480** |
| MT2113 | **732613** |
| MT2114 | **732613** |

| IAM | Valeo |
|---|---|
| **AVA COOLING SYSTEMS** | |
| MT2116 | **732525** |
| MT2117 | **734128** |
| MT2122 | **734129** |
| MT2123 | **734129** |
| MT2127 | **734137** |
| MT2128 | **731462** |
| MT2129 | **734139** |
| MT2133 | **734139** |
| MT2134 | **734141** |
| MT2135 | **734141** |
| MT2136 | **731462** |
| MT2138 | **732748** |
| MT2139 | **734481** |
| MT2142 | **732524** |
| MT2143 | **734142** |
| MT2147 | **732540** |
| MT2148 | **734127** |
| MT2153 | **734142** |
| MT2156 | **734143** |
| MT2157 | **734144** |
| MT2158 | **734146** |
| MT2163 | **735058** |
| MT2164 | **735060** |
| MT2167 | **734424** |
| MT2169 | **734198** |
| MT2170 | **735059** |
| MT2171 | **734196** |
| MT2172 | **735055** |
| MT2173 | **735057** |
| MT2174 | **735056** |
| MT2183 | **735201** |
| MT2184 | **735203** |
| MT2185 | **735202** |
| MT2199 | **735198** |
| MT2207 | **735575** |
| MT2217 | **735576** |
| MZ2002 | **730241** |
| MZ2023 | **730436** |
| MZ2024 | **731142** |
| MZ2027 | **731073** |
| MZ2028 | **730435** |
| MZ2030 | **731142** |
| MZ2037 | **731372** |
| MZ2042 | **734262** |
| MZ2048 | **730440** |
| MZ2050 | **732538** |
| MZ2051 | **731139** |
| MZ2064 | **730437** |
| MZ2066 | **731461** |
| MZ2068 | **732326** |
| MZ2069 | **732475** |
| MZ2070 | **731036** |
| MZ2071 | **732326** |
| MZ2073 | **731466** |
| MZ2074 | **731472** |
| MZ2075 | **734627** |
| MZ2083 | **730435** |
| MZ2087 | **731437** |
| MZ2088 | **732325** |
| MZ2090 | **731072** |
| MZ2096 | **734581** |
| MZ2098 | **734120** |
| MZ2100 | **732345** |
| MZ2113 | **735236** |
| MZ2117 | **731417** |
| MZ2138 | **734119** |
| MZ2139 | **732726** |
| MZ2146 | **732346** |
| MZ2151 | **734123** |
| MZ2152 | **734124** |
| MZ2153 | **734122** |
| MZ2160 | **735053** |
| MZ2161 | **734483** |
| MZ2162 | **734484** |
| MZ2164 | **734410** |
| MZ2167 | **734126** |
| MZ2168 | **735240** |
| MZ2178 | **734121** |

| IAM | Valeo |
|---|---|
| **AVA COOLING SYSTEMS** | |
| MZ2183 | **734320** |
| MZ2190 | **734118** |
| MZ2191 | **734207** |
| MZ2210 | **735577** |
| MZ2213 | **735416** |
| OL2023 | **730975** |
| OL2028 | **730993** |
| OL2029 | **730994** |
| OL2050 | **883751** |
| OL2053 | **883767** |
| OL2054 | **883771** |
| OL2063 | **883857** |
| OL2064 | **883858** |
| OL2065 | **883859** |
| OL2066 | **730125** |
| OL2068 | **883856** |
| OL2074 | **883920** |
| OL2091 | **730993** |
| OL2106 | **819388** |
| OL2107 | **819389** |
| OL2117 | **883878** |
| OL2119 | **730396** |
| OL2120 | **730395** |
| OL2122 | **731217** |
| OL2127 | **731022** |
| OL2136 | **731174** |
| OL2150 | **883880** |
| OL2155 | **883920** |
| OL2161 | **883877** |
| OL2163 | **883881** |
| OL2168 | **731170** |
| OL2169 | **734429** |
| OL2173 | **731175** |
| OL2174 | **734644** |
| OL2175 | **735229** |
| OL2175 | **731236** |
| OL2179 | **734821** |
| OL2183 | **731013** |
| OL2184 | **731178** |
| OL2185 | **731179** |
| OL2186 | **734604** |
| OL2187 | **734604** |
| OL2188 | **731237** |
| OL2190 | **731175** |
| OL2191 | **731551** |
| OL2198 | **731842** |
| OL2199 | **731843** |
| OL2200 | **734271** |
| OL2201 | **731839** |
| OL2202 | **731840** |
| OL2203 | **732032** |
| OL2207 | **731421** |
| OL2213 | **731236** |
| OL2214 | **731237** |
| OL2219 | **731393** |
| OL2220 | **731847** |
| OL2220 | **732347** |
| OL2221 | **731846** |
| OL2222 | **731848** |
| OL2239 | **735065** |
| OL2242 | **731525** |
| OL2244 | **732347** |
| OL2245 | **731839** |
| OL2246 | **731842** |
| OL2248 | **731840** |
| OL2249 | **734389** |
| OL2252 | **732550** |
| OL2253 | **732548** |
| OL2254 | **732549** |
| OL2255 | **732551** |
| OL2256 | **732724** |
| OL2257 | **732723** |
| OL2261 | **732606** |
| OL2263 | **732607** |
| OL2266 | **734242** |
| OL2272 | **732795** |
| OL2275 | **732349** |
| OL2293 | **732550** |

| IAM | Valeo |
|---|---|
| **AVA COOLING SYSTEMS** | |
| OL2294 | **734322** |
| OL2296 | **732729** |
| OL2303 | **732825** |
| OL2305 | **732824** |
| OL2306 | **732826** |
| OL2329 | **734388** |
| OL2330 | **732694** |
| OL2337 | **734353** |
| OL2338 | **732879** |
| OL2339 | **732876** |
| OL2340 | **732877** |
| OL2341 | **732878** |
| OL2345 | **734384** |
| OL2346 | **734386** |
| OL2348 | **734385** |
| OL2359 | **732348** |
| OL2362 | **734381** |
| OL2363 | **734382** |
| OL2364 | **734380** |
| OL2365 | **734383** |
| OL2380 | **734464** |
| OL2381 | **734432** |
| OL2382 | **734330** |
| OL2382 | **734331** |
| OL2383 | **735080** |
| OL2388 | **734345** |
| OL2395 | **734302** |
| OL2396 | **734339** |
| OL2408 | **735097** |
| OL4069 | **817400** |
| OL4145 | **817400** |
| OL4145 | **817919** |
| OL4189 | **818758** |
| OL4204 | **817401** |
| OL4208 | **817915** |
| OL4235 | **817919** |
| OL4262 | **817399** |
| OL4269 | **817917** |
| OL4270 | **817918** |
| OL4281 | **818758** |
| OL4322 | **818728** |
| OL4325 | **817916** |
| OL4360 | **817697** |
| OL4361 | **817729** |
| OL4374 | **818759** |
| OL4401 | **818701** |
| OL4404 | **818809** |
| OL4439 | **817998** |
| OL4449 | **817998** |
| OL4491 | **818722** |
| OL4492 | **817730** |
| OLA4325 | **817916** |
| OLA4374 | **818759** |
| OLA4404 | **818809** |
| PE2004 | **730569** |
| PE2012 | **730372** |
| PE2013 | **730366** |
| PE2013 | **730515** |
| PE2014 | **730368** |
| PE2021 | **810881** |
| PE2033 | **883765** |
| PE2042 | **730898** |
| PE2056 | **810882** |
| PE2068 | **730506** |
| PE2073 | **816700** |
| PE2079 | **730015** |
| PE2080 | **730015** |
| PE2081 | **811380** |
| PE2082 | **730040** |
| PE2085 | **810827** |
| PE2092 | **810915** |
| PE2095 | **810892** |
| PE2096 | **730534** |
| PE2097 | **810919** |
| PE2098 | **810955** |
| PE2099 | **730018** |
| PE2105 | **730015** |
| PE2109 | **730018** |

| IAM | Valeo |
|---|---|
| **AVA COOLING SYSTEMS** | |
| PE2110 | **730015** |
| PE2111 | **730634** |
| PE2112 | **730040** |
| PE2116 | **816555** |
| PE2121 | **730512** |
| PE2124 | **730572** |
| PE2125 | **730575** |
| PE2126 | **730577** |
| PE2127 | **730575** |
| PE2131 | **730953** |
| PE2132 | **730974** |
| PE2133 | **730974** |
| PE2135 | **730953** |
| PE2136 | **730927** |
| PE2137 | **730630** |
| PE2140 | **730983** |
| PE2141 | **730985** |
| PE2142 | **730984** |
| PE2145 | **731611** |
| PE2146 | **731611** |
| PE2147 | **730995** |
| PE2148 | **731010** |
| PE2149 | **731186** |
| PE2150 | **730997** |
| PE2151 | **730999** |
| PE2152 | **810955** |
| PE2176 | **731584** |
| PE2177 | **731586** |
| PE2178 | **731750** |
| PE2179 | **731575** |
| PE2181 | **731574** |
| PE2185 | **731584** |
| PE2188 | **732885** |
| PE2189 | **732886** |
| PE2190 | **732910** |
| PE2196 | **732567** |
| PE2198 | **732598** |
| PE2200 | **732599** |
| PE2202 | **734280** |
| PE2203 | **732909** |
| PE2205 | **732910** |
| PE2206 | **732887** |
| PE2207 | **732887** |
| PE2208 | **734278** |
| PE2210 | **732906** |
| PE2211 | **732892** |
| PE2212 | **732893** |
| PE2216 | **732794** |
| PE2217 | **734282** |
| PE2218 | **732896** |
| PE2219 | **732891** |
| PE2220 | **732894** |
| PE2221 | **732908** |
| PE2222 | **732890** |
| PE2223 | **732895** |
| PE2229 | **734336** |
| PE2230 | **732492** |
| PE2231 | **734411** |
| PE2234 | **734281** |
| PE2235 | **734279** |
| PE2236 | **732892** |
| PE2237 | **732830** |
| PE2238 | **732895** |
| PE2239 | **732895** |
| PE2241 | **732896** |
| PE2243 | **732885** |
| PE2244 | **732886** |
| PE2245 | **732904** |
| PE2246 | **732910** |
| PE2247 | **732906** |
| PE2248 | **732910** |
| PE2249 | **732894** |
| PE2250 | **732908** |
| PE2251 | **732890** |
| PE2252 | **732891** |
| PE2253 | **732887** |
| PE2254 | **732909** |
| PE2255 | **734338** |

| IAM | Valeo |
|---|---|
| **AVA COOLING SYSTEMS** | |
| PE2256 | **734452** |
| PE2260 | **734346** |
| PE2262 | **732882** |
| PE2265 | **730040** |
| PE2267 | **734338** |
| PE2268 | **731611** |
| PE2274 | **732880** |
| PE2275 | **732944** |
| PE2276 | **732945** |
| PE2277 | **732881** |
| PE2280 | **732888** |
| PE2288 | **732930** |
| PE2289 | **732930** |
| PE2290 | **734398** |
| PE2293 | **734921** |
| PE2298 | **735125** |
| PE2300 | **732904** |
| PE2300 | **732910** |
| PE2300 | **732887** |
| PE2300 | **732909** |
| PE2300 | **734346** |
| PE2300 | **732908** |
| PE2300 | **732895** |
| PE2300 | **732893** |
| PE2300 | **732892** |
| PE2300 | **732890** |
| PE2300 | **732886** |
| PE2300 | **732891** |
| PE2308 | **735255** |
| PE3271 | **817705** |
| PE3297 | **817643** |
| PE4120 | **816613** |
| PE4139 | **816790** |
| PE4143 | **816611** |
| PE4144 | **816847** |
| PE4183 | **817632** |
| PE4204 | **817437** |
| PE4261 | **817650** |
| PE4273 | **817578** |
| PE4279 | **817920** |
| PE4294 | **818822** |
| PE4299 | **817845** |
| PE4332 | **818837** |
| PE4334 | **818841** |
| PE4335 | **818836** |
| PE4336 | **818853** |
| PE4337 | **818866** |
| PE4338 | **818209** |
| PE4342 | **817638** |
| PE4343 | **818226** |
| PE4344 | **818895** |
| PE4345 | **817639** |
| PEA4204 | **817437** |
| PEA4261 | **817650** |
| PR2004 | **810952** |
| PR2023 | **734826** |
| PR2037 | **734827** |
| RE4005 | **816607** |
| RE4006 | **816612** |
| RE4009 | **816730** |
| RE4019 | **816693** |
| RE4034 | **816961** |
| RE4047 | **817181** |
| RE4048 | **816979** |
| RE4064 | **816729** |
| RE4065 | **816717** |
| RE4077 | **816978** |
| RE4079 | **816798** |
| RE4080 | **816797** |
| RT2001 | **883463** |
| RT2005 | **730510** |
| RT2009 | **883282** |
| RT2010 | **810933** |
| RT2016 | **810927** |
| RT2016 | **883729** |
| RT2021 | **810843** |
| RT2022 | **810843** |
| RT2025 | **810835** |

| IAM | Valeo |
|---|---|
| **AVA COOLING SYSTEMS** | |
| RT2041 | **816655** |
| RT2042 | **816657** |
| RT2043 | **883875** |
| RT2045 | **730180** |
| RT2052 | **810889** |
| RT2053 | **810912** |
| RT2054 | **730510** |
| RT2060 | **730940** |
| RT2063 | **883852** |
| RT2063 | **883959** |
| RT2065 | **883851** |
| RT2070 | **810851** |
| RT2071 | **810926** |
| RT2077 | **810938** |
| RT2078 | **810887** |
| RT2084 | **730140** |
| RT2105 | **810888** |
| RT2107 | **730940** |
| RT2109 | **730055** |
| RT2115 | **816552** |
| RT2118 | **816658** |
| RT2119 | **810995** |
| RT2120 | **816654** |
| RT2121 | **816656** |
| RT2123 | **731016** |
| RT2125 | **730511** |
| RT2126 | **730973** |
| RT2128 | **730183** |
| RT2129 | **730181** |
| RT2130 | **730182** |
| RT2131 | **819431** |
| RT2132 | **730499** |
| RT2132 | **816655** |
| RT2134 | **730185** |
| RT2135 | **730540** |
| RT2140 | **730548** |
| RT2141 | **730549** |
| RT2149 | **730551** |
| RT2150 | **730184** |
| RT2155 | **730944** |
| RT2158 | **730633** |
| RT2159 | **730502** |
| RT2164 | **731128** |
| RT2165 | **731161** |
| RT2166 | **731162** |
| RT2166 | **731738** |
| RT2167 | **730969** |
| RT2172 | **730973** |
| RT2174 | **732072** |
| RT2197 | **731378** |
| RT2198 | **731379** |
| RT2199 | **731380** |
| RT2202 | **730140** |
| RT2203 | **731538** |
| RT2206 | **731552** |
| RT2208 | **731129** |
| RT2209 | **731529** |
| RT2215 | **731910** |
| RT2217 | **732051** |
| RT2218 | **731378** |
| RT2230 | **732071** |
| RT2230 | **732474** |
| RT2231 | **732474** |
| RT2233 | **734284** |
| RT2237 | **732544** |
| RT2239 | **732608** |
| RT2240 | **734285** |
| RT2241 | **732316** |
| RT2257 | **732049** |
| RT2258 | **732071** |
| RT2259 | **732544** |
| RT2260 | **732338** |
| RT2261 | **732338** |
| RT2262 | **732819** |
| RT2263 | **732050** |
| RT2264 | **732569** |
| RT2266 | **732559** |
| RT2267 | **732387** |

| IAM | Valeo |
|---|---|
| **AVA COOLING SYSTEMS** | |
| RT2268 | **732387** |
| RT2269 | **732621** |
| RT2270 | **732721** |
| RT2271 | **732389** |
| RT2272 | **732523** |
| RT2274 | **732940** |
| RT2276 | **732798** |
| RT2290 | **732827** |
| RT2292 | **732828** |
| RT2293 | **734828** |
| RT2299 | **732570** |
| RT2300 | **734728** |
| RT2302 | **732761** |
| RT2303 | **732846** |
| RT2303 | **732853** |
| RT2307 | **732874** |
| RT2309 | **732717** |
| RT2312 | **732817** |
| RT2313 | **732902** |
| RT2321 | **732917** |
| RT2322 | **732918** |
| RT2325 | **732687** |
| RT2326 | **732737** |
| RT2327 | **732846** |
| RT2327 | **732853** |
| RT2361 | **732919** |
| RT2362 | **732960** |
| RT2371 | **734462** |
| RT2372 | **734461** |
| RT2374 | **735135** |
| RT2375 | **735134** |
| RT2377 | **810927** |
| RT2387 | **734438** |
| RT4057 | **816610** |
| RT4089 | **817115** |
| RT4117 | **816610** |
| RT4122 | **816606** |
| RT4124 | **817627** |
| RT4143 | **816758** |
| RT4148 | **816755** |
| RT4212 | **816836** |
| RT4222 | **817490** |
| RT4223 | **816998** |
| RT4224 | **817336** |
| RT4277 | **817924** |
| RT4295 | **817926** |
| RT4296 | **817925** |
| RT4298 | **817942** |
| RT4316 | **818727** |
| RT4320 | **817923** |
| RT4328 | **817554** |
| RT4329 | **817380** |
| RT4338 | **817699** |
| RT4346 | **818820** |
| RT4351 | **817654** |
| RT4358 | **817636** |
| RT4359 | **817637** |
| RT4363 | **817927** |
| RT4390 | **818772** |
| RT4397 | **817828** |
| RT4411 | **818870** |
| RT4412 | **818878** |
| RT4423 | **818835** |
| RT4426 | **818896** |
| RT4456 | **818771** |
| RT7526 | **698015** |
| RT7527 | **698316** |
| RT7528 | **698004** |
| RT7531 | **698084** |
| RT7532 | **698085** |
| RT7534 | **698086** |
| RT7535 | **698317** |
| RTA4089 | **817115** |
| RTA4222 | **817490** |
| RTA4295 | **817926** |
| RTA4329 | **817380** |
| RTA4359 | **817637** |
| SA2002 | **730375** |

| IAM | Valeo |
|---|---|
| **AVA COOLING SYSTEMS** | |
| SA2003 | **732479** |
| SA2005 | **732863** |
| SA2006 | **732864** |
| SA2008 | **732864** |
| SA2010 | **732862** |
| SA2013 | **733062** |
| SA2014 | **732864** |
| SA4019 | **817501** |
| SA4020 | **818829** |
| SB2003 | **810965** |
| SB2005 | **732108** |
| SB2008 | **732123** |
| SB2010 | **810965** |
| SB2020 | **810965** |
| SB2026 | **732120** |
| SB2027 | **732121** |
| SB2028 | **732122** |
| SB2035 | **734714** |
| SB2036 | **734830** |
| SB2037 | **734831** |
| SB2046 | **732110** |
| SB2050 | **732108** |
| SB2055 | **734831** |
| SB2061 | **734714** |
| SB2062 | **734830** |
| SB4023 | **817172** |
| SB4024 | **810981** |
| SB4029 | **816849** |
| SB4030 | **817929** |
| SB4047 | **817275** |
| SB4066 | **818840** |
| SB4068 | **818818** |
| SB4068 | **818817** |
| SC4005 | **816853** |
| SC4011 | **817772** |
| SC4018 | **817770** |
| SCA4011 | **817772** |
| SCA4018 | **817770** |
| ST2004 | **883921** |
| ST2005 | **883958** |
| ST2008 | **730542** |
| ST2009 | **730370** |
| ST2011 | **883053** |
| ST2019 | **730947** |
| ST2020 | **731271** |
| ST2021 | **730945** |
| ST2021 | **731266** |
| ST2022 | **730946** |
| ST2023 | **730947** |
| ST2024 | **730948** |
| ST2027 | **883727** |
| ST2028 | **731269** |
| ST2030 | **731270** |
| ST2031 | **731268** |
| ST2033 | **883727** |
| ST2035 | **732317** |
| ST4036 | **817558** |
| SU2005 | **731456** |
| SU2007 | **731153** |
| SU2008 | **730455** |
| SU2010 | **731438** |
| SU2015 | **732410** |
| SU2016 | **734577** |
| SU2018 | **731675** |
| SU2022 | **731678** |
| SU2035 | **734211** |
| SU2036 | **734212** |
| SU2037 | **734158** |
| SU2045 | **732410** |
| SU2046 | **734577** |
| SU2048 | **734405** |
| SU2053 | **734465** |
| SZ2003 | **730457** |
| SZ2006 | **730456** |
| SZ2015 | **731463** |
| SZ2020 | **734166** |
| SZ2022 | **731828** |
| SZ2023 | **734159** |

| IAM | Valeo |
|---|---|
| **AVA COOLING SYSTEMS** | |
| SZ2025 | **734406** |
| SZ2028 | **731866** |
| SZ2033 | **734662** |
| SZ2034 | **732750** |
| SZ2036 | **734919** |
| SZ2046 | **734213** |
| SZ2050 | **734835** |
| SZ2055 | **734170** |
| SZ2057 | **734917** |
| SZ2058 | **734486** |
| SZ2061 | **734171** |
| SZ2062 | **734164** |
| SZ2063 | **734165** |
| SZ2064 | **732719** |
| SZ2065 | **735074** |
| SZ2070 | **735073** |
| SZ2071 | **731463** |
| SZ2072 | **734662** |
| SZ2073 | **734161** |
| SZ2074 | **734918** |
| SZ2077 | **734214** |
| SZ2084 | **735407** |
| SZ2086 | **735400** |
| SZ2102 | **735580** |
| SZ2103 | **735433** |
| SZ2109 | **735578** |
| TO2008 | **731199** |
| TO2011 | **731199** |
| TO2012 | **730466** |
| TO2012 | **731622** |
| TO2014 | **731196** |
| TO2023 | **730466** |
| TO2030 | **731095** |
| TO2033 | **731692** |
| TO2034 | **819123** |
| TO2036 | **730470** |
| TO2038 | **731124** |
| TO2044 | **730468** |
| TO2048 | **730469** |
| TO2061 | **732561** |
| TO2065 | **731135** |
| TO2069 | **730465** |
| TO2080 | **731698** |
| TO2080 | **731095** |
| TO2088 | **731122** |
| TO2092 | **735583** |
| TO2093 | **731716** |
| TO2099 | **731115** |
| TO2100 | **731114** |
| TO2107 | **731717** |
| TO2111 | **731098** |
| TO2112 | **731097** |
| TO2115 | **731119** |
| TO2116 | **730472** |
| TO2117 | **730471** |
| TO2118 | **731095** |
| TO2124 | **731106** |
| TO2126 | **731691** |
| TO2140 | **731441** |
| TO2141 | **731565** |
| TO2142 | **731696** |
| TO2143 | **731694** |
| TO2144 | **734181** |
| TO2145 | **731569** |
| TO2146 | **734839** |
| TO2147 | **731441** |
| TO2148 | **731464** |
| TO2151 | **731713** |
| TO2154 | **731715** |
| TO2160 | **731833** |
| TO2163 | **731831** |
| TO2181 | **731568** |
| TO2185 | **732476** |
| TO2187 | **731684** |
| TO2200 | **732542** |
| TO2201 | **731830** |
| TO2204 | **731441** |
| TO2204 | **731685** |

| IAM | Valeo |
|---|---|
| **AVA COOLING SYSTEMS** | |
| TO2205 | **731682** |
| TO2206 | **731110** |
| TO2219 | **734172** |
| TO2220 | **734466** |
| TO2221 | **732415** |
| TO2227 | **732543** |
| TO2230 | **734176** |
| TO2232 | **734177** |
| TO2233 | **735593** |
| TO2235 | **734488** |
| TO2236 | **734489** |
| TO2237 | **732950** |
| TO2238 | **732753** |
| TO2239 | **732951** |
| TO2240 | **732754** |
| TO2241 | **732420** |
| TO2242 | **732420** |
| TO2248 | **734205** |
| TO2249 | **734206** |
| TO2251 | **732421** |
| TO2255 | **734850** |
| TO2258 | **734840** |
| TO2259 | **734841** |
| TO2273 | **735415** |
| TO2282 | **735214** |
| TO2283 | **734401** |
| TO2284 | **734490** |
| TO2285 | **734491** |
| TO2289 | **734199** |
| TO2290 | **734200** |
| TO2291 | **734845** |
| TO2295 | **732413** |
| TO2297 | **734216** |
| TO2299 | **734182** |
| TO2301 | **734183** |
| TO2303 | **734492** |
| TO2306 | **734493** |
| TO2309 | **734185** |
| TO2310 | **734204** |
| TO2317 | **734842** |
| TO2318 | **734916** |
| TO2323 | **734711** |
| TO2324 | **735075** |
| TO2330 | **732420** |
| TO2332 | **734712** |
| TO2334 | **732417** |
| TO2336 | **734201** |
| TO2344 | **734173** |
| TO2346 | **734175** |
| TO2347 | **734174** |
| TO2348 | **734397** |
| TO2350 | **731441** |
| TO2351 | **735567** |
| TO2355 | **732416** |
| TO2357 | **735445** |
| TO2359 | **735070** |
| TO2360 | **735069** |
| TO2363 | **735072** |
| TO2367 | **735569** |
| TO2398 | **735573** |
| TO2399 | **735572** |
| TO2403 | **735574** |
| TO2432 | **735442** |
| TO2434 | **735565** |
| TO2462 | **735571** |
| TO2478 | **735568** |
| TO4365 | **817698** |
| VL4004 | **816858** |
| VL4018 | **816858** |
| VL4021 | **817773** |
| VL4021 | **817774** |
| VL4022 | **817774** |
| VL4043 | **817775** |
| VL4049 | **818877** |
| VL4050 | **818876** |
| VO2007 | **732365** |
| VO2015 | **732372** |
| VO2018 | **731248** |

| IAM | Valeo |
|---|---|
| **AVA COOLING SYSTEMS** | |
| VO2027 | **810970** |
| VO2037 | **731248** |
| VO2038 | **810968** |
| VO2056 | **810956** |
| VO2060 | **810957** |
| VO2087 | **732368** |
| VO2088 | **732366** |
| VO2089 | **732369** |
| VO2092 | **732365** |
| VO2117 | **734720** |
| VO2118 | **734856** |
| VO2124 | **734320** |
| VO4134 | **818816** |
| VW2009 | **883718** |
| VW2011 | **883720** |
| VW2018 | **730485** |
| VW2027 | **730955** |
| VW2028 | **730504** |
| VW2028 | **730503** |
| VW2029 | **730504** |
| VW2034 | **732435** |
| VW2035 | **883864** |
| VW2038 | **883818** |
| VW2039 | **883819** |
| VW2040 | **883820** |
| VW2041 | **883849** |
| VW2042 | **734586** |
| VW2045 | **883727** |
| VW2047 | **883820** |
| VW2059 | **883905** |
| VW2066 | **730629** |
| VW2070 | **883869** |
| VW2071 | **883870** |
| VW2072 | **883871** |
| VW2078 | **732438** |
| VW2079 | **732436** |
| VW2080 | **730485** |
| VW2083 | **731401** |
| VW2085 | **734853** |
| VW2088 | **734515** |
| VW2091 | **731401** |
| VW2091 | **734606** |
| VW2092 | **816703** |
| VW2094 | **731411** |
| VW2099 | **730505** |
| VW2102 | **732437** |
| VW2103 | **730971** |
| VW2104 | **731127** |
| VW2105 | **731032** |
| VW2109 | **731025** |
| VW2111 | **734415** |
| VW2114 | **732397** |
| VW2115 | **731268** |
| VW2116 | **731265** |
| VW2119 | **731005** |
| VW2120 | **731007** |
| VW2121 | **731008** |
| VW2122 | **731006** |
| VW2124 | **731267** |
| VW2129 | **730956** |
| VW2130 | **730954** |
| VW2131 | **730955** |
| VW2133 | **731385** |
| VW2134 | **731386** |
| VW2135 | **731387** |
| VW2149 | **731616** |
| VW2152 | **731607** |
| VW2155 | **731605** |
| VW2156 | **731728** |
| VW2179 | **732493** |
| VW2180 | **732698** |
| VW2184 | **732786** |
| VW2188 | **732790** |
| VW2191 | **732710** |
| VW2192 | **731264** |
| VW2193 | **732867** |
| VW2198 | **734739** |
| VW2199 | **734740** |

| IAM | Valeo |
|---|---|
| **AVA COOLING SYSTEMS** | |
| VW2204 | **734332** |
| VW2205 | **734335** |
| VW2205 | **735121** |
| VW2206 | **732872** |
| VW2208 | **734333** |
| VW2214 | **734741** |
| VW2217 | **732427** |
| VW2223 | **734335** |
| VW2245 | **732177** |
| VW2247 | **732797** |
| VW2249 | **732953** |
| VW2250 | **732952** |
| VW2260 | **730954** |
| VW3106 | **817943** |
| VW4019 | **817934** |
| VW4127 | **817764** |
| VW4136 | **817766** |
| VW4154 | **817937** |
| VW4157 | **817936** |
| VW4158 | **818719** |
| VW4159 | **817765** |
| VW4162 | **817767** |
| VW4163 | **817764** |
| VW4182 | **817459** |
| VW4194 | **817486** |
| VW4200 | **817457** |
| VW4213 | **817556** |
| VW4216 | **818720** |
| VW4219 | **817555** |
| VW4221 | **818827** |
| VW4222 | **818828** |
| VW4227 | **818795** |
| VW4234 | **818814** |
| VW4235 | **818815** |
| VW4238 | **818812** |
| VW4246 | **817372** |
| VW4248 | **818813** |
| VW4251 | **818834** |
| VW4253 | **817634** |
| VW4254 | **817635** |
| VW4263 | **818215** |
| VW4267 | **818732** |
| VW4305 | **818838** |
| VW7511 | **696041** |
| VW7517 | **698357** |
| VW7518 | **698322** |
| VW7521 | **696042** |
| VW7522 | **698373** |
| VWA4200 | **817457** |
| VWA4216 | **818720** |
| VWA4227 | **818795** |
| VWA4238 | **818812** |
| **BEHR - HELLA** | |
| 01024009SF | **883956** |
| 01033020IF | **730181** |
| 4126 | **732462** |
| 100417 | **883954** |
| 100430 | **883956** |
| 100447 | **883053** |
| 100457 | **730181** |
| 100521 | **731257** |
| 100523 | **730856** |
| 100524 | **730117** |
| 100525 | **730123** |
| 100529 | **732538** |
| 100708 | **731466** |
| 100774 | **732426** |
| 100780 | **730594** |
| 100842 | **731853** |
| 100848 | **731833** |
| 100848 | **732476** |
| 100922 | **735229** |
| 2107972 | **732462** |
| 2108124 | **734614** |
| 2108276 | **819414** |
| 2108331 | **735231** |
| 2108349 | **734301** |

| IAM | Valeo |
|---|---|
| **BEHR - HELLA** | |
| 2108575 | **817917** |
| 2108577 | **731786** |
| 2108635 | **734615** |
| 2108721 | **883921** |
| 2108861 | **734428** |
| 2108908 | **735223** |
| 2108908 | **735233** |
| 2108927 | **734848** |
| 2108992 | **735231** |
| 2108996 | **732462** |
| 2109014 | **734388** |
| 2109057 | **734615** |
| 2109141 | **730990** |
| 2109174 | **883809** |
| 2109696 | **730968** |
| 2109698 | **730566** |
| 2109715 | **731299** |
| 2109736 | **731734** |
| 2109742 | **731257** |
| 2110083 | **732598** |
| 2110083 | **734278** |
| 2110089 | **734280** |
| 2110330 | **731492** |
| 2110333 | **810851** |
| 2110854 | **731212** |
| 2110893 | **730457** |
| 2110897 | **734406** |
| 2111328 | **883827** |
| 2112703 | **817638** |
| 2112744 | **734918** |
| 2114028 | **818759** |
| 2114611 | **732612** |
| 2114932 | **734894** |
| 2114933 | **734895** |
| 2114934 | **734896** |
| 2115716 | **734898** |
| 2116026 | **811056** |
| 2116542 | **734220** |
| 2204647 | **734689** |
| 2209228 | **734876** |
| 2209229 | **734878** |
| 2209230 | **734877** |
| 6800694 | **696063** |
| 102210900 | **883954** |
| 151010003 | **730152** |
| 153910001 | **730110** |
| 154010001 | **730631** |
| 156910001 | **730114** |
| 180010022 | **883053** |
| 180010048 | **730181** |
| 2129510003 | **819414** |
| 2129710003 | **734615** |
| 2135310000 | **735231** |
| 2139510003 | **734301** |
| 2157010003 | **819397** |
| 2172410003 | **734615** |
| 2172810003 | **819415** |
| 2180010012 | **883921** |
| 8EW009144251 | **696060** |
| 8EW009144301 | **696049** |
| 8EW009144321 | **696036** |
| 8EW009144331 | **696037** |
| 8EW009144351 | **698155** |
| 8EW009144361 | **696055** |
| 8EW009144381 | **696031** |
| 8EW009144391 | **698368** |
| 8EW009144401 | **698369** |
| 8EW009144411 | **696034** |
| 8EW009144421 | **696038** |
| 8EW009144451 | **696078** |
| 8EW009144461 | **698370** |
| 8EW009144471 | **698367** |
| 8EW009144501 | **698371** |
| 8EW009144511 | **696056** |
| 8EW009144521 | **696057** |
| 8EW009144531 | **696042** |
| 8EW009144541 | **696067** |
| 8EW009144551 | **696032** |

| IAM | Valeo |
|---|---|
| **BEHR - HELLA** | |
| 8EW009144601 | **698373** |
| 8EW009144611 | **696041** |
| 8EW009144751 | **696068** |
| 8EW009144761 | **696059** |
| 8EW009157001 | **696043** |
| 8EW009157301 | **696172** |
| 8EW009158241 | **698179** |
| 8EW009158701 | **696035** |
| 8EW009158711 | **696065** |
| 8EW009158721 | **696058** |
| 8EW009158751 | **696062** |
| 8EW009158761 | **696063** |
| 8EW351034271 | **696273** |
| 8EW351039431 | **696098** |
| 8EW351039581 | **696197** |
| 8EW351039641 | **696104** |
| 8EW351039661 | **696106** |
| 8FC351024151 | **814260** |
| 8FC351024171 | **814256** |
| 8FC351029091 | **818986** |
| 8FC351035231 | **816803** |
| 8FC351035261 | **816835** |
| 8FC351035271 | **816865** |
| 8FC351035281 | **816850** |
| 8FC351035341 | **816866** |
| 8FC351035421 | **816852** |
| 8FC351035461 | **816867** |
| 8FC351035471 | **816987** |
| 8FC351035501 | **814317** |
| 8FC351035521 | **816922** |
| 8FC351035581 | **817232** |
| 8FC351035641 | **816921** |
| 8FC351035661 | **818009** |
| 8FC351035701 | **816898** |
| 8FC351035711 | **814276** |
| 8FC351035741 | **814274** |
| 8FC351036011 | **816900** |
| 8FC351036031 | **816960** |
| 8FC351036041 | **816977** |
| 8FC351036061 | **816908** |
| 8FC351036071 | **817507** |
| 8FC351036081 | **816910** |
| 8FC351036091 | **817675** |
| 8FC351036111 | **816948** |
| 8FC351036151 | **816981** |
| 8FC351036171 | **817375** |
| 8FC351036191 | **816912** |
| 8FC351036201 | **816839** |
| 8FC351036251 | **814289** |
| 8FC351036281 | **817781** |
| 8FC351036301 | **814251** |
| 8FC351036361 | **817023** |
| 8FC351036381 | **817244** |
| 8FC351036401 | **817230** |
| 8FC351036411 | **816992** |
| 8FC351036421 | **817225** |
| 8FC351036491 | **817792** |
| 8FC351036491 | **817794** |
| 8FC351036511 | **817253** |
| 8FC351036571 | **818099** |
| 8FC351036581 | **814244** |
| 8FC351036591 | **818104** |
| 8FC351036611 | **818105** |
| 8FC351036631 | **814285** |
| 8FC351036661 | **817560** |
| 8FC351036671 | **817559** |
| 8FC351036741 | **816973** |
| 8FC351036751 | **818179** |
| 8FC351036761 | **817252** |
| 8FC351037051 | **817248** |
| 8FC351037081 | **814246** |
| 8FC351037101 | **816885** |
| 8FC351037151 | **816984** |
| 8FC351037161 | **816891** |
| 8FC351037171 | **816949** |
| 8FC351037331 | **817562** |
| 8FC351037341 | **817011** |
| 8FC351037361 | **818081** |

| IAM | Valeo |
|---|---|
| **BEHR - HELLA** | |
| 8FC351037381 | **816924** |
| 8FC351037421 | **817247** |
| 8FC351037441 | **814295** |
| 8FC351037451 | **817527** |
| 8FC351037471 | **817493** |
| 8FC351037481 | **817288** |
| 8FC351037491 | **818070** |
| 8FC351037511 | **817283** |
| 8FC351037541 | **817171** |
| 8FC351037551 | **816867** |
| 8FC351037581 | **816902** |
| 8FC351037581 | **816924** |
| 8FC351037591 | **816902** |
| 8FC351037621 | **816960** |
| 8FC351037631 | **817670** |
| 8FC351037641 | **817675** |
| 8FC351037651 | **817427** |
| 8FC351037741 | **817783** |
| 8FC351037751 | **817197** |
| 8FC351037781 | **814248** |
| 8FC351038201 | **817383** |
| 8FC351038211 | **817405** |
| 8FC351038221 | **816964** |
| 8FC351038301 | **817385** |
| 8FC351038311 | **818006** |
| 8FC351038311 | **817684** |
| 8FC351038321 | **817685** |
| 8FC351038411 | **814300** |
| 8FC351038421 | **817997** |
| 8FC351038431 | **817840** |
| 8FC351038451 | **817563** |
| 8FC351038461 | **817492** |
| 8FC351038491 | **817603** |
| 8FC351038501 | **817235** |
| 8FC351038521 | **814298** |
| 8FC351038521 | **818107** |
| 8FC351038531 | **814282** |
| 8FC351038541 | **818086** |
| 8FC351038551 | **817570** |
| 8FC351038561 | **816756** |
| 8FC351038581 | **817819** |
| 8FC351038591 | **817428** |
| 8FC351038681 | **817666** |
| 8FC351038691 | **817245** |
| 8FC351038701 | **818085** |
| 8FC351038711 | **817567** |
| 8FC351038721 | **817458** |
| 8FC351038731 | **817803** |
| 8FC351038741 | **817802** |
| 8FC351038801 | **817561** |
| 8FC351038811 | **817406** |
| 8FC351300001 | **817607** |
| 8FC351300011 | **818008** |
| 8FC351300021 | **814286** |
| 8FC351300061 | **818040** |
| 8FC351300071 | **818044** |
| 8FC351300081 | **818041** |
| 8FC351300091 | **818042** |
| 8FC351300111 | **816962** |
| 8FC351300121 | **818033** |
| 8FC351300131 | **818034** |
| 8FC351300141 | **818035** |
| 8FC351300161 | **817247** |
| 8FC351300171 | **817246** |
| 8FC351300201 | **816996** |
| 8FC351300211 | **818036** |
| 8FC351300241 | **817569** |
| 8FC351300251 | **817464** |
| 8FC351300251 | **817465** |
| 8FC351300261 | **817674** |
| 8FC351300291 | **817655** |
| 8FC351300301 | **817647** |
| 8FC351300311 | **817648** |
| 8FC351300321 | **817657** |
| 8FC351300341 | **817568** |
| 8FC351300351 | **817664** |
| 8FC351300371 | **817663** |
| 8FC351300381 | **817665** |

| IAM | Valeo |
|---|---|
| **BEHR - HELLA** | |
| 8FC351300391 | **817679** |
| 8FC351300411 | **817445** |
| 8FC351300471 | **818087** |
| 8FC351300491 | **817428** |
| 8FC351300501 | **817022** |
| 8FC351300511 | **817509** |
| 8FC351300531 | **817463** |
| 8FC351300541 | **817805** |
| 8FC351300551 | **817015** |
| 8FC351300571 | **818987** |
| 8FC351300581 | **818984** |
| 8FC351300591 | **818024** |
| 8FC351300601 | **817609** |
| 8FC351300611 | **818118** |
| 8FC351300621 | **817610** |
| 8FC351300631 | **817575** |
| 8FC351300641 | **817547** |
| 8FC351300651 | **817602** |
| 8FC351300661 | **817526** |
| 8FC351300671 | **817524** |
| 8FC351300711 | **818003** |
| 8FC351300731 | **817732** |
| 8FC351300741 | **818006** |
| 8FC351300751 | **818050** |
| 8FC351300761 | **814283** |
| 8FC351300771 | **814247** |
| 8FC351301031 | **817508** |
| 8FC351301041 | **817777** |
| 8FC351301051 | **817806** |
| 8FC351301071 | **817741** |
| 8FC351301081 | **816945** |
| 8FC351301091 | **818092** |
| 8FC351301101 | **817386** |
| 8FC351301121 | **817842** |
| 8FC351301131 | **814254** |
| 8FC351301141 | **817477** |
| 8FC351301171 | **818003** |
| 8FC351301191 | **817843** |
| 8FC351301201 | **817844** |
| 8FC351301211 | **817669** |
| 8FC351301221 | **817505** |
| 8FC351301221 | **818047** |
| 8FC351301241 | **817505** |
| 8FC351301261 | **818028** |
| 8FC351301271 | **817801** |
| 8FC351301281 | **817229** |
| 8FC351301291 | **817042** |
| 8FC351301301 | **817837** |
| 8FC351301321 | **817850** |
| 8FC351301331 | **817851** |
| 8FC351301341 | **817849** |
| 8FC351301351 | **817848** |
| 8FC351301361 | **817504** |
| 8FC351301371 | **817506** |
| 8FC351301381 | **817667** |
| 8FC351301391 | **817659** |
| 8FC351301401 | **816967** |
| 8FC351301411 | **818093** |
| 8FC351301421 | **814167** |
| 8FC351301431 | **817731** |
| 8FC351301441 | **818027** |
| 8FC351301521 | **818004** |
| 8FC351301531 | **817686** |
| 8FC351301561 | **817608** |
| 8FC351301581 | **816902** |
| 8FC351301581 | **816924** |
| 8FC351301601 | **814085** |
| 8FC351301631 | **814007** |
| 8FC351301641 | **814006** |
| 8FC351301651 | **818193** |
| 8FC351301661 | **814069** |
| 8FC351301701 | **818020** |
| 8FC351301711 | **818021** |
| 8FC351301711 | **818017** |
| 8FC351301721 | **818017** |
| 8FC351301731 | **818046** |
| 8FC351301741 | **818114** |
| 8FC351301751 | **817847** |

| IAM | Valeo |
|---|---|
| **BEHR - HELLA** | |
| 8FC351301761 | **817839** |
| 8FC351301771 | **817846** |
| 8FC351302041 | **814304** |
| 8FC351302061 | **814305** |
| 8FC351302111 | **814218** |
| 8FC351302151 | **817230** |
| 8FC351302161 | **814264** |
| 8FC351302201 | **814307** |
| 8FC351302221 | **814241** |
| 8FC351302241 | **817445** |
| 8FC351302371 | **818168** |
| 8FC351302381 | **814198** |
| 8FC351302391 | **817818** |
| 8FC351302411 | **816985** |
| 8FC351302421 | **818030** |
| 8FC351302441 | **817741** |
| 8FC351302451 | **814004** |
| 8FC351302531 | **817852** |
| 8FC351302591 | **817809** |
| 8FC351302611 | **814011** |
| 8FC351302621 | **814012** |
| 8FC351302711 | **814250** |
| 8FC351303371 | **814080** |
| 8FC351303401 | **814186** |
| 8FC351303511 | **817379** |
| 8FC351303531 | **818013** |
| 8FC351303531 | **818014** |
| 8FC351303541 | **814095** |
| 8FC351303581 | **818018** |
| 8FC351303591 | **817645** |
| 8FC351303611 | **814081** |
| 8FC351303651 | **817668** |
| 8FC351303661 | **818015** |
| 8FC351303671 | **814208** |
| 8FC351303681 | **814242** |
| 8FC351303691 | **814159** |
| 8FC351303711 | **818031** |
| 8FC351303741 | **814266** |
| 8FC351303761 | **814267** |
| 8FC351304081 | **817790** |
| 8FC351304121 | **814314** |
| 8FC351304131 | **814000** |
| 8FC351304141 | **814312** |
| 8FC351304171 | **814278** |
| 8FC351304171 | **814281** |
| 8FC351304221 | **814309** |
| 8FC351304231 | **814272** |
| 8FC351304231 | **814273** |
| 8FC351304321 | **817024** |
| 8FC351304341 | **814204** |
| 8FC351304351 | **814228** |
| 8FC351304431 | **814237** |
| 8FC351304461 | **817780** |
| 8FC351304471 | **817711** |
| 8FC351304501 | **818000** |
| 8FC351304501 | **818001** |
| 8FC351304511 | **814287** |
| 8FC351304721 | **818192** |
| 8FC351304741 | **814227** |
| 8FC351304751 | **818190** |
| 8FC351304781 | **814158** |
| 8FC351305211 | **818191** |
| 8FC351305221 | **817579** |
| 8FC351305231 | **817668** |
| 8FC351305551 | **818018** |
| 8FC351305681 | **818037** |
| 8FC351306111 | **818084** |
| 8FC351306121 | **814253** |
| 8FC351306121 | **814257** |
| 8FC351307361 | **818988** |
| 8FC351307381 | **814311** |
| 8FC351307661 | **814223** |
| 8FC351307671 | **814224** |
| 8FC351307681 | **814213** |
| 8FC351307751 | **814315** |
| 8FC351307771 | **814238** |
| 8FC351308771 | **814231** |
| 8FC351308781 | **814232** |

| IAM | Valeo |
|---|---|
| **BEHR - HELLA** | |
| 8FC351310611 | **814201** |
| 8FC351310621 | **814202** |
| 8FC351317001 | **814292** |
| 8FC351317011 | **817230** |
| 8FC351317141 | **817235** |
| 8FC351317271 | **814252** |
| 8FC351317451 | **817841** |
| 8FC351317481 | **814165** |
| 8FC351317541 | **814002** |
| 8FC351317551 | **814089** |
| 8FC351317561 | **818170** |
| 8FC351317571 | **818171** |
| 8FC351317611 | **818043** |
| 8FC351317631 | **818985** |
| 8FC351317651 | **814015** |
| 8FC351317701 | **814302** |
| 8FC351317741 | **817067** |
| 8FC351317761 | **817799** |
| 8FC351317771 | **817799** |
| 8FC351317781 | **817608** |
| 8FC351318001 | **818025** |
| 8FC351318031 | **814277** |
| 8FC351318051 | **814303** |
| 8FC351318061 | **814225** |
| 8FC351318311 | **818023** |
| 8FC351318361 | **818169** |
| 8FC351318371 | **817701** |
| 8FC351318381 | **818194** |
| 8FC351318391 | **818187** |
| 8FC351318401 | **814199** |
| 8FC351318411 | **814087** |
| 8FC351318431 | **818187** |
| 8FC351330401 | **814243** |
| 8FH351024211 | **812034** |
| 8FH351024221 | **812335** |
| 8FH351024261 | **812219** |
| 8FH351024271 | **812284** |
| 8FH351024291 | **883976** |
| 8FH351024301 | **812005** |
| 8FH351024321 | **812002** |
| 8FH351024331 | **508555** |
| 8FH351024331 | **883976** |
| 8FH351024341 | **883739** |
| 8FH351024351 | **812288** |
| 8FH351024361 | **812287** |
| 8FH351024401 | **812013** |
| 8FH351024421 | **812279** |
| 8FH351024461 | **812016** |
| 8FH351311001 | **812334** |
| 8FH351311011 | **812031** |
| 8FH351311031 | **812169** |
| 8FH351311041 | **812030** |
| 8FH351311051 | **883790** |
| 8FH351311061 | **812031** |
| 8FH351311071 | **883965** |
| 8FH351311111 | **812323** |
| 8FH351311121 | **812319** |
| 8FH351311141 | **812222** |
| 8FH351311181 | **812321** |
| 8FH351311211 | **812365** |
| 8FH351311231 | **812363** |
| 8FH351311261 | **812403** |
| 8FH351311281 | **812044** |
| 8FH351311281 | **812005** |
| 8FH351311301 | **812360** |
| 8FH351311311 | **812223** |
| 8FH351311321 | **812318** |
| 8FH351311331 | **812220** |
| 8FH351311341 | **812221** |
| 8FH351311391 | **812328** |
| 8FH351311411 | **812326** |
| 8FH351311421 | **812237** |
| 8FH351311431 | **812238** |
| 8FH351311441 | **812296** |
| 8FH351311481 | **883520** |
| 8FH351311561 | **812015** |
| 8FH351311571 | **812129** |
| 8FH351311581 | **812129** |

| IAM | Valeo |
|---|---|
| **BEHR - HELLA** | |
| 8FH351311591 | **812084** |
| 8FH351311611 | **812304** |
| 8FH351311631 | **812157** |
| 8FH351311651 | **812114** |
| 8FH351311671 | **812115** |
| 8FH351311691 | **812299** |
| 8FH351311701 | **812112** |
| 8FH351311711 | **812113** |
| 8FH351311731 | **812116** |
| 8FH351311771 | **812148** |
| 8FH351311781 | **812150** |
| 8FH351311791 | **812240** |
| 8FH351312001 | **883965** |
| 8FH351312011 | **812294** |
| 8FH351312021 | **812366** |
| 8FH351312131 | **812322** |
| 8FH351312161 | **812397** |
| 8FH351312331 | **812045** |
| 8FH351312521 | **812251** |
| 8FH351312751 | **812362** |
| 8FH351312771 | **812239** |
| 8FH351313021 | **812149** |
| 8FH351313031 | **812146** |
| 8FH351313041 | **812156** |
| 8FH351313041 | **811075** |
| 8FH351313051 | **883971** |
| 8FH351313061 | **811397** |
| 8FH351313091 | **812273** |
| 8FH351313101 | **812276** |
| 8FH351313111 | **812057** |
| 8FH351313121 | **812053** |
| 8FH351313131 | **812058** |
| 8FH351313141 | **812117** |
| 8FH351313151 | **812118** |
| 8FH351313161 | **812275** |
| 8FH351313171 | **812141** |
| 8FH351313201 | **812303** |
| 8FH351313211 | **811065** |
| 8FH351313221 | **811075** |
| 8FH351313221 | **811066** |
| 8FH351313231 | **812058** |
| 8FH351313241 | **812272** |
| 8FH351313251 | **812276** |
| 8FH351313281 | **812110** |
| 8FH351313291 | **812126** |
| 8FH351313301 | **812139** |
| 8FH351313311 | **812048** |
| 8FH351313321 | **812154** |
| 8FH351313331 | **812286** |
| 8FH351313341 | **812029** |
| 8FH351313351 | **812081** |
| 8FH351313351 | **812145** |
| 8FH351313361 | **811066** |
| 8FH351313371 | **812141** |
| 8FH351313381 | **812081** |
| 8FH351313391 | **812169** |
| 8FH351313401 | **812013** |
| 8FH351313411 | **812189** |
| 8FH351313421 | **812161** |
| 8FH351313431 | **812037** |
| 8FH351313441 | **812014** |
| 8FH351313451 | **812324** |
| 8FH351313461 | **812320** |
| 8FH351313531 | **812225** |
| 8FH351315291 | **812410** |
| 8FH351315331 | **812335** |
| 8FH351315341 | **812285** |
| 8FH351333001 | **812277** |
| 8FH351333011 | **812274** |
| 8FH351333031 | **812332** |
| 8FH351333041 | **812364** |
| 8FH351333061 | **812361** |
| 8MK376704551 | **731105** |
| 8MK376704601 | **732863** |
| 8MK376704681 | **731134** |
| 8MK376704691 | **731664** |
| 8MK376704701 | **731659** |
| 8MK376704711 | **731451** |

| IAM | Valeo |
|---|---|
| **BEHR - HELLA** | |
| 8MK376704721 | **731268** |
| 8MK376704721 | **731267** |
| 8MK376704741 | **732405** |
| 8MK376704751 | **735065** |
| 8MK376704761 | **734250** |
| 8MK376704771 | **883881** |
| 8MK376704781 | **732005** |
| 8MK376704781 | **732006** |
| 8MK376704781 | **732007** |
| 8MK376705541 | **734123** |
| 8MK376705551 | **734286** |
| 8MK376705561 | **731728** |
| 8MK376705581 | **734761** |
| 8MK376705581 | **734766** |
| 8MK376705621 | **731237** |
| 8MK376705631 | **732529** |
| 8MK376705641 | **734766** |
| 8MK376705651 | **810965** |
| 8MK376705671 | **734248** |
| 8MK376705681 | **730407** |
| 8MK376705691 | **730449** |
| 8MK376705751 | **731115** |
| 8MK376705771 | **732552** |
| 8MK376705781 | **810843** |
| 8MK376706001 | **732589** |
| 8MK376706201 | **732442** |
| 8MK376706211 | **730180** |
| 8MK376706261 | **732596** |
| 8MK376706291 | **734819** |
| 8MK376706371 | **730183** |
| 8MK376706381 | **730181** |
| 8MK376706391 | **730182** |
| 8MK376706401 | **730502** |
| 8MK376706411 | **816655** |
| 8MK376706421 | **734671** |
| 8MK376706441 | **732484** |
| 8MK376706471 | **730969** |
| 8MK376706481 | **731261** |
| 8MK376706491 | **732592** |
| 8MK376706501 | **730973** |
| 8MK376706511 | **730511** |
| 8MK376706531 | **734427** |
| 8MK376706541 | **732819** |
| 8MK376706621 | **730317** |
| 8MK376706631 | **731257** |
| 8MK376706651 | **730856** |
| 8MK376706661 | **730117** |
| 8MK376706661 | **731595** |
| 8MK376706681 | **731634** |
| 8MK376706681 | **819193** |
| 8MK376706691 | **731434** |
| 8MK376706701 | **734120** |
| 8MK376706711 | **730440** |
| 8MK376706711 | **732538** |
| 8MK376706721 | **731073** |
| 8MK376706731 | **731441** |
| 8MK376707001 | **811073** |
| 8MK376707021 | **816715** |
| 8MK376707021 | **730927** |
| 8MK376707021 | **730985** |
| 8MK376707071 | **730995** |
| 8MK376707081 | **731527** |
| 8MK376707091 | **732758** |
| 8MK376707111 | **883856** |
| 8MK376707121 | **730934** |
| 8MK376707121 | **819428** |
| 8MK376707121 | **730984** |
| 8MK376707131 | **810933** |
| 8MK376707141 | **730507** |
| 8MK376707141 | **734454** |
| 8MK376707171 | **734455** |
| 8MK376707181 | **730591** |
| 8MK376707201 | **730970** |
| 8MK376707211 | **731185** |
| 8MK376707251 | **731584** |
| 8MK376707261 | **730507** |
| 8MK376707281 | **731176** |
| 8MK376707301 | **731411** |

| IAM | Valeo |
|---|---|
| **BEHR - HELLA** | |
| 8MK376707321 | **731735** |
| 8MK376707351 | **732323** |
| 8MK376707401 | **731684** |
| 8MK376707411 | **731461** |
| 8MK376707421 | **730440** |
| 8MK376707431 | **731101** |
| 8MK376707431 | **731100** |
| 8MK376707451 | **731142** |
| 8MK376707471 | **732345** |
| 8MK376707471 | **734120** |
| 8MK376707491 | **731090** |
| 8MK376707501 | **730423** |
| 8MK376707511 | **731196** |
| 8MK376707551 | **731434** |
| 8MK376707551 | **731469** |
| 8MK376707561 | **731085** |
| 8MK376707581 | **730454** |
| 8MK376707621 | **732426** |
| 8MK376707651 | **730417** |
| 8MK376707661 | **732326** |
| 8MK376707671 | **732475** |
| 8MK376707771 | **732345** |
| 8MK376707781 | **731434** |
| 8MK376707791 | **734111** |
| 8MK376707791 | **730316** |
| 8MK376708011 | **731630** |
| 8MK376708041 | **731106** |
| 8MK376708061 | **732475** |
| 8MK376708091 | **731646** |
| 8MK376708101 | **730471** |
| 8MK376708101 | **731119** |
| 8MK376708121 | **731569** |
| 8MK376708131 | **731076** |
| 8MK376708131 | **732323** |
| 8MK376708141 | **730404** |
| 8MK376708151 | **730471** |
| 8MK376708161 | **731568** |
| 8MK376708171 | **731124** |
| 8MK376708191 | **730436** |
| 8MK376708201 | **731828** |
| 8MK376708221 | **731020** |
| 8MK376708241 | **730406** |
| 8MK376708251 | **731087** |
| 8MK376708261 | **731471** |
| 8MK376708271 | **730408** |
| 8MK376708291 | **732326** |
| 8MK376708311 | **731100** |
| 8MK376708311 | **731101** |
| 8MK376708371 | **731629** |
| 8MK376708381 | **731459** |
| 8MK376708381 | **731473** |
| 8MK376708381 | **731474** |
| 8MK376708401 | **732540** |
| 8MK376708451 | **732798** |
| 8MK376708461 | **731129** |
| 8MK376708471 | **730185** |
| 8MK376708491 | **730838** |
| 8MK376708501 | **732623** |
| 8MK376708511 | **731531** |
| 8MK376708521 | **731168** |
| 8MK376708541 | **731647** |
| 8MK376708551 | **730430** |
| 8MK376708561 | **731634** |
| 8MK376708571 | **730430** |
| 8MK376708581 | **731412** |
| 8MK376708591 | **731820** |
| 8MK376708601 | **735229** |
| 8MK376708631 | **732483** |
| 8MK376708641 | **731462** |
| 8MK376708661 | **734821** |
| 8MK376708681 | **730575** |
| 8MK376708731 | **731977** |
| 8MK376708741 | **731975** |
| 8MK376708781 | **732108** |
| 8MK376709031 | **810957** |
| 8MK376710211 | **731538** |
| 8MK376710231 | **731294** |
| 8MK376710241 | **730927** |

| IAM | Valeo |
|---|---|
| **BEHR - HELLA** | |
| 8MK376710251 | **732534** |
| 8MK376710251 | **816715** |
| 8MK376710261 | **732535** |
| 8MK376710261 | **730630** |
| 8MK376710271 | **731804** |
| 8MK376710281 | **734801** |
| 8MK376710291 | **734802** |
| 8MK376710311 | **732549** |
| 8MK376710311 | **732729** |
| 8MK376710321 | **732549** |
| 8MK376710331 | **732548** |
| 8MK376710561 | **734614** |
| 8MK376710591 | **883876** |
| 8MK376710651 | **883860** |
| 8MK376710661 | **732551** |
| 8MK376710741 | **819395** |
| 8MK376710781 | **819414** |
| 8MK376711081 | **731511** |
| 8MK376711081 | **732198** |
| 8MK376711091 | **734799** |
| 8MK376711101 | **732605** |
| 8MK376711111 | **731766** |
| 8MK376711121 | **731725** |
| 8MK376711131 | **734301** |
| 8MK376711151 | **732446** |
| 8MK376711161 | **732447** |
| 8MK376711171 | **734794** |
| 8MK376711191 | **731512** |
| 8MK376711191 | **731514** |
| 8MK376711191 | **732587** |
| 8MK376711191 | **731808** |
| 8MK376711211 | **731162** |
| 8MK376711221 | **731161** |
| 8MK376711231 | **732450** |
| 8MK376711241 | **734301** |
| 8MK376711251 | **732451** |
| 8MK376711271 | **731760** |
| 8MK376711271 | **883863** |
| 8MK376711281 | **731505** |
| 8MK376711311 | **819368** |
| 8MK376711331 | **819201** |
| 8MK376711351 | **819376** |
| 8MK376711371 | **819383** |
| 8MK376711391 | **819379** |
| 8MK376711421 | **819397** |
| 8MK376711421 | **819414** |
| 8MK376711451 | **732454** |
| 8MK376711461 | **734798** |
| 8MK376711491 | **816716** |
| 8MK376711501 | **732099** |
| 8MK376711511 | **734795** |
| 8MK376711521 | **734793** |
| 8MK376711581 | **731760** |
| 8MK376711591 | **730365** |
| 8MK376711601 | **819418** |
| 8MK376711651 | **734615** |
| 8MK376711661 | **819415** |
| 8MK376711681 | **819428** |
| 8MK376711711 | **734644** |
| 8MK376711731 | **819388** |
| 8MK376711741 | **819389** |
| 8MK376711751 | **883920** |
| 8MK376711751 | **731022** |
| 8MK376711761 | **731022** |
| 8MK376711791 | **731170** |
| 8MK376712001 | **731013** |
| 8MK376712011 | **731178** |
| 8MK376712021 | **731805** |
| 8MK376712041 | **883958** |
| 8MK376712081 | **730946** |
| 8MK376712091 | **730947** |
| 8MK376712121 | **732593** |
| 8MK376712131 | **734421** |
| 8MK376712181 | **731514** |
| 8MK376712201 | **734631** |
| 8MK376712211 | **731514** |
| 8MK376712221 | **819412** |
| 8MK376712271 | **732458** |

| IAM | Valeo |
|---|---|
| **BEHR - HELLA** | |
| 8MK376712291 | **730344** |
| 8MK376712321 | **732090** |
| 8MK376712331 | **732459** |
| 8MK376712351 | **731179** |
| 8MK376712371 | **731523** |
| 8MK376712381 | **731523** |
| 8MK376712391 | **734394** |
| 8MK376712401 | **734796** |
| 8MK376712421 | **819377** |
| 8MK376712431 | **732460** |
| 8MK376712441 | **819373** |
| 8MK376712451 | **732591** |
| 8MK376712461 | **819387** |
| 8MK376712481 | **734277** |
| 8MK376712491 | **734277** |
| 8MK376712501 | **735233** |
| 8MK376712511 | **735223** |
| 8MK376712511 | **735233** |
| 8MK376712531 | **819384** |
| 8MK376712541 | **731298** |
| 8MK376712551 | **734848** |
| 8MK376712601 | **734322** |
| 8MK376712631 | **732338** |
| 8MK376712641 | **734803** |
| 8MK376712681 | **732544** |
| 8MK376712691 | **731161** |
| 8MK376712701 | **732607** |
| 8MK376712721 | **734446** |
| 8MK376712761 | **735231** |
| 8MK376713001 | **732550** |
| 8MK376713021 | **732550** |
| 8MK376713041 | **732587** |
| 8MK376713081 | **819412** |
| 8MK376713091 | **810947** |
| 8MK376713091 | **819422** |
| 8MK376713101 | **819413** |
| 8MK376713121 | **732198** |
| 8MK376713131 | **819418** |
| 8MK376713141 | **732099** |
| 8MK376713171 | **731511** |
| 8MK376713201 | **734615** |
| 8MK376713281 | **819418** |
| 8MK376713301 | **883727** |
| 8MK376713311 | **883849** |
| 8MK376713321 | **883819** |
| 8MK376713331 | **883820** |
| 8MK376713341 | **883818** |
| 8MK376713351 | **883871** |
| 8MK376713371 | **883720** |
| 8MK376713391 | **730991** |
| 8MK376713411 | **730483** |
| 8MK376713421 | **731025** |
| 8MK376713441 | **730485** |
| 8MK376713451 | **883720** |
| 8MK376713471 | **883870** |
| 8MK376713471 | **730629** |
| 8MK376713481 | **811381** |
| 8MK376713491 | **811385** |
| 8MK376713501 | **883811** |
| 8MK376713511 | **730976** |
| 8MK376713521 | **883812** |
| 8MK376713531 | **883825** |
| 8MK376713541 | **732705** |
| 8MK376713551 | **816710** |
| 8MK376713561 | **811389** |
| 8MK376713571 | **732032** |
| 8MK376713581 | **734429** |
| 8MK376713581 | **730993** |
| 8MK376713591 | **734271** |
| 8MK376713601 | **730360** |
| 8MK376713601 | **730361** |
| 8MK376713611 | **734751** |
| 8MK376713611 | **730363** |
| 8MK376713631 | **732435** |
| 8MK376713641 | **811068** |
| 8MK376713711 | **883809** |
| 8MK376713721 | **730948** |
| 8MK376713731 | **730945** |

| IAM | Valeo |
|---|---|
| **BEHR - HELLA** | |
| 8MK376713741 | **730503** |
| 8MK376713741 | **730504** |
| 8MK376713751 | **730504** |
| 8MK376713771 | **731606** |
| 8MK376713771 | **731607** |
| 8MK376713781 | **731606** |
| 8MK376713781 | **732175** |
| 8MK376713791 | **734826** |
| 8MK376713791 | **734827** |
| 8MK376714051 | **816711** |
| 8MK376714051 | **883813** |
| 8MK376714061 | **731617** |
| 8MK376714161 | **730856** |
| 8MK376714171 | **730857** |
| 8MK376714241 | **732003** |
| 8MK376714251 | **731992** |
| 8MK376714271 | **731011** |
| 8MK376714271 | **731257** |
| 8MK376714271 | **731550** |
| 8MK376714281 | **883857** |
| 8MK376714291 | **734827** |
| 8MK376714291 | **734826** |
| 8MK376714301 | **734749** |
| 8MK376714311 | **734668** |
| 8MK376714321 | **734669** |
| 8MK376714331 | **732740** |
| 8MK376714331 | **732741** |
| 8MK376714341 | **732825** |
| 8MK376714361 | **732826** |
| 8MK376714381 | **732824** |
| 8MK376714391 | **732598** |
| 8MK376714391 | **734278** |
| 8MK376714401 | **734279** |
| 8MK376714411 | **734281** |
| 8MK376714431 | **734282** |
| 8MK376714441 | **731267** |
| 8MK376714441 | **731268** |
| 8MK376714451 | **731265** |
| 8MK376714461 | **731422** |
| 8MK376714471 | **819260** |
| 8MK376714481 | **732397** |
| 8MK376714491 | **731127** |
| 8MK376714501 | **731270** |
| 8MK376714511 | **731271** |
| 8MK376714521 | **731501** |
| 8MK376714541 | **730955** |
| 8MK376714561 | **734606** |
| 8MK376714571 | **730349** |
| 8MK376714601 | **732361** |
| 8MK376714601 | **731429** |
| 8MK376714611 | **731537** |
| 8MK376714631 | **731807** |
| 8MK376714641 | **734586** |
| 8MK376714651 | **730956** |
| 8MK376714661 | **816703** |
| 8MK376714681 | **732437** |
| 8MK376714711 | **883864** |
| 8MK376714721 | **883863** |
| 8MK376714731 | **730971** |
| 8MK376714741 | **731267** |
| 8MK376714771 | **731428** |
| 8MK376714791 | **734853** |
| 8MK376715011 | **731401** |
| 8MK376715031 | **883863** |
| 8MK376715061 | **732438** |
| 8MK376715151 | **883718** |
| 8MK376715161 | **731430** |
| 8MK376715171 | **731006** |
| 8MK376715271 | **730349** |
| 8MK376715281 | **732436** |
| 8MK376715311 | **734429** |
| 8MK376715321 | **734464** |
| 8MK376715331 | **731756** |
| 8MK376715341 | **734269** |
| 8MK376715351 | **810827** |
| 8MK376715361 | **730140** |
| 8MK376715371 | **730897** |
| 8MK376715381 | **730534** |

| IAM | Valeo |
|---|---|
| **BEHR - HELLA** | |
| 8MK376715381 | **810892** |
| 8MK376715391 | **816700** |
| 8MK376715401 | **810811** |
| 8MK376715411 | **730896** |
| 8MK376715421 | **730898** |
| 8MK376715431 | **731530** |
| 8MK376715441 | **731173** |
| 8MK376715451 | **811046** |
| 8MK376715461 | **730116** |
| 8MK376715481 | **883878** |
| 8MK376715491 | **810851** |
| 8MK376715511 | **810835** |
| 8MK376715521 | **731743** |
| 8MK376715521 | **732517** |
| 8MK376715521 | **732577** |
| 8MK376715521 | **732620** |
| 8MK376715531 | **731380** |
| 8MK376715541 | **730172** |
| 8MK376715571 | **731090** |
| 8MK376715581 | **731193** |
| 8MK376715591 | **819151** |
| 8MK376715621 | **731736** |
| 8MK376715641 | **732759** |
| 8MK376715651 | **730565** |
| 8MK376715661 | **883767** |
| 8MK376715671 | **883920** |
| 8MK376715671 | **883771** |
| 8MK376715681 | **731217** |
| 8MK376715682 | **731217** |
| 8MK376715683 | **731217** |
| 8MK376715691 | **883858** |
| 8MK376715711 | **730395** |
| 8MK376715721 | **731175** |
| 8MK376715721 | **731174** |
| 8MK376715731 | **730396** |
| 8MK376715731 | **730395** |
| 8MK376715741 | **731175** |
| 8MK376715751 | **730125** |
| 8MK376715761 | **883920** |
| 8MK376715771 | **731421** |
| 8MK376715791 | **730994** |
| 8MK376716001 | **730015** |
| 8MK376716011 | **883282** |
| 8MK376716041 | **731300** |
| 8MK376716061 | **883959** |
| 8MK376716071 | **730975** |
| 8MK376716081 | **730940** |
| 8MK376716091 | **730993** |
| 8MK376716101 | **730119** |
| 8MK376716111 | **731215** |
| 8MK376716121 | **811070** |
| 8MK376716131 | **730018** |
| 8MK376716141 | **810949** |
| 8MK376716151 | **811073** |
| 8MK376716151 | **731591** |
| 8MK376716151 | **810949** |
| 8MK376716161 | **731378** |
| 8MK376716171 | **811071** |
| 8MK376716181 | **810912** |
| 8MK376716191 | **730510** |
| 8MK376716211 | **819431** |
| 8MK376716211 | **730184** |
| 8MK376716221 | **730375** |
| 8MK376716231 | **732863** |
| 8MK376716241 | **734276** |
| 8MK376716251 | **734276** |
| 8MK376716261 | **734276** |
| 8MK376716271 | **734276** |
| 8MK376716281 | **732827** |
| 8MK376716301 | **732828** |
| 8MK376716311 | **734728** |
| 8MK376716321 | **732698** |
| 8MK376716331 | **735230** |
| 8MK376716351 | **731202** |
| 8MK376716361 | **731212** |
| 8MK376716371 | **731910** |
| 8MK376716381 | **883959** |
| 8MK376716401 | **730457** |

| IAM | Valeo |
|---|---|
| **BEHR - HELLA** | |
| 8MK376716431 | **734919** |
| 8MK376716451 | **730515** |
| 8MK376716451 | **730368** |
| 8MK376716461 | **731186** |
| 8MK376716471 | **731527** |
| 8MK376716481 | **731528** |
| 8MK376716481 | **731498** |
| 8MK376716491 | **810889** |
| 8MK376716501 | **731297** |
| 8MK376716511 | **730982** |
| 8MK376716521 | **731743** |
| 8MK376716541 | **730634** |
| 8MK376716551 | **730953** |
| 8MK376716561 | **731289** |
| 8MK376716571 | **730944** |
| 8MK376716581 | **731181** |
| 8MK376716591 | **731570** |
| 8MK376716591 | **731744** |
| 8MK376716601 | **816658** |
| 8MK376716621 | **731755** |
| 8MK376716621 | **731537** |
| 8MK376716621 | **732361** |
| 8MK376716621 | **731755** |
| 8MK376716631 | **732534** |
| 8MK376716701 | **883859** |
| 8MK376716711 | **811386** |
| 8MK376716721 | **883827** |
| 8MK376717031 | **734828** |
| 8MK376717081 | **811380** |
| 8MK376717111 | **731724** |
| 8MK376717161 | **730172** |
| 8MK376717171 | **732520** |
| 8MK376717201 | **731508** |
| 8MK376717221 | **731509** |
| 8MK376717231 | **734269** |
| 8MK376717271 | **883875** |
| 8MK376717281 | **730997** |
| 8MK376717281 | **731611** |
| 8MK376717291 | **731010** |
| 8MK376717301 | **816657** |
| 8MK376717311 | **730981** |
| 8MK376717321 | **731177** |
| 8MK376717331 | **810919** |
| 8MK376717341 | **730633** |
| 8MK376717351 | **883866** |
| 8MK376717361 | **816654** |
| 8MK376717371 | **730548** |
| 8MK376717381 | **731529** |
| 8MK376717441 | **732316** |
| 8MK376717451 | **731379** |
| 8MK376717461 | **730365** |
| 8MK376717471 | **731520** |
| 8MK376717481 | **730958** |
| 8MK376717491 | **731181** |
| 8MK376717501 | **732520** |
| 8MK376717521 | **730040** |
| 8MK376717521 | **883765** |
| 8MK376717531 | **732886** |
| 8MK376717531 | **732910** |
| 8MK376717551 | **816647** |
| 8MK376717581 | **734336** |
| 8MK376717591 | **732492** |
| 8MK376717661 | **730953** |
| 8MK376717671 | **731378** |
| 8MK376717681 | **734918** |
| 8MK376717691 | **735074** |
| 8MK376717701 | **732862** |
| 8MK376717701 | **732864** |
| 8MK376717711 | **730954** |
| 8MK376717731 | **731005** |
| 8MK376717741 | **731007** |
| 8MK376717751 | **731008** |
| 8MK376717761 | **732387** |
| 8MK376717771 | **732387** |
| 8MK376717781 | **732474** |
| 8MK376717791 | **732071** |
| 8MK376718001 | **734396** |
| 8MK376718021 | **734805** |

| IAM | Valeo |
|---|---|
| **BEHR - HELLA** | |
| 8MK376718051 | **732908** |
| 8MK376718071 | **883869** |
| 8MK376718081 | **734221** |
| 8MK376718091 | **732012** |
| 8MK376718101 | **732011** |
| 8MK376718111 | **732248** |
| 8MK376718121 | **732013** |
| 8MK376718131 | **732891** |
| 8MK376718141 | **732890** |
| 8MK376718151 | **732892** |
| 8MK376718161 | **732893** |
| 8MK376718171 | **732887** |
| 8MK376718181 | **732909** |
| 8MK376718191 | **731304** |
| 8MK376718191 | **731981** |
| 8MK376718191 | **732557** |
| 8MK376718201 | **731306** |
| 8MK376718211 | **732787** |
| 8MK376718221 | **731302** |
| 8MK376718231 | **732049** |
| 8MK376718251 | **732885** |
| 8MK376718261 | **883851** |
| 8MK376718271 | **732389** |
| 8MK376718291 | **730491** |
| 8MK376718301 | **816706** |
| 8MK376718311 | **730309** |
| 8MK376718311 | **730520** |
| 8MK376718341 | **734329** |
| 8MK376718351 | **731565** |
| 8MK376718361 | **731036** |
| 8MK376718371 | **731831** |
| 8MK376718381 | **731713** |
| 8MK376718391 | **732539** |
| 8MK376718401 | **731696** |
| 8MK376718411 | **732612** |
| 8MK376718421 | **732421** |
| 8MK376718441 | **731438** |
| 8MK376718451 | **734172** |
| 8MK376718461 | **732950** |
| 8MK376718471 | **731674** |
| 8MK376718481 | **732951** |
| 8MK376718491 | **732528** |
| 8MK376718501 | **731659** |
| 8MK376718511 | **734129** |
| 8MK376718521 | **734747** |
| 8MK376718531 | **734489** |
| 8MK376718541 | **732524** |
| 8MK376718551 | **734177** |
| 8MK376718571 | **732315** |
| 8MK376718581 | **732578** |
| 8MK376718591 | **732706** |
| 8MK376718601 | **732736** |
| 8MK376718611 | **732831** |
| 8MK376718621 | **732831** |
| 8MK376718631 | **732930** |
| 8MK376718641 | **732930** |
| 8MK376718651 | **731839** |
| 8MK376718661 | **731840** |
| 8MK376718681 | **731842** |
| 8MK376718691 | **731843** |
| 8MK376718711 | **731847** |
| 8MK376718711 | **732347** |
| 8MK376718721 | **732349** |
| 8MK376718751 | **734894** |
| 8MK376718761 | **734895** |
| 8MK376718771 | **734896** |
| 8MK376718781 | **734739** |
| 8MK376718791 | **734740** |
| 8MK376719001 | **734741** |
| 8MK376719011 | **734395** |
| 8MK376719031 | **818727** |
| 8MK376719091 | **735033** |
| 8MK376719101 | **735036** |
| 8MK376719121 | **735034** |
| 8MK376719131 | **734897** |
| 8MK376719141 | **734898** |
| 8MK376719201 | **810836** |
| 8MK376719211 | **810954** |

| IAM | Valeo |
|---|---|
| **BEHR - HELLA** | |
| 8MK376719221 | **730494** |
| 8MK376719231 | **732692** |
| 8MK376719251 | **732582** |
| 8MK376719261 | **732584** |
| 8MK376719271 | **730506** |
| 8MK376719281 | **732567** |
| 8MK376719291 | **732599** |
| 8MK376719301 | **810938** |
| 8MK376719311 | **810887** |
| 8MK376719321 | **810888** |
| 8MK376719331 | **810995** |
| 8MK376719341 | **730549** |
| 8MK376719351 | **730362** |
| 8MK376719361 | **883464** |
| 8MK376719371 | **883715** |
| 8MK376719381 | **883773** |
| 8MK376719401 | **883774** |
| 8MK376719411 | **816554** |
| 8MK376719421 | **730960** |
| 8MK376719431 | **730957** |
| 8MK376719441 | **730632** |
| 8MK376719451 | **731009** |
| 8MK376719461 | **731165** |
| 8MK376719471 | **731166** |
| 8MK376719481 | **731381** |
| 8MK376719491 | **731382** |
| 8MK376719501 | **731296** |
| 8MK376719511 | **732563** |
| 8MK376719521 | **811392** |
| 8MK376719531 | **731304** |
| 8MK376719541 | **731592** |
| 8MK376719551 | **732788** |
| 8MK376719561 | **883877** |
| 8MK376719571 | **810915** |
| 8MK376719581 | **816555** |
| 8MK376719591 | **730512** |
| 8MK376719601 | **730575** |
| 8MK376719611 | **730577** |
| 8MK376719621 | **731575** |
| 8MK376719631 | **731574** |
| 8MK376719651 | **730540** |
| 8MK376719661 | **732559** |
| 8MK376719671 | **732621** |
| 8MK376719681 | **732721** |
| 8MK376719691 | **732523** |
| 8MK376719701 | **731605** |
| 8MK376719711 | **731386** |
| 8MK376719751 | **735054** |
| 8MK376719761 | **731128** |
| 8MK376719771 | **732325** |
| 8MK376719781 | **731458** |
| 8MK376719791 | **731526** |
| 8MK376720001 | **730372** |
| 8MK376720011 | **732051** |
| 8MK376720021 | **816656** |
| 8MK376720031 | **819431** |
| 8MK376720041 | **883463** |
| 8MK376720051 | **816707** |
| 8MK376720061 | **730634** |
| 8MK376720061 | **810955** |
| 8MK376720071 | **883765** |
| 8MK376720081 | **731570** |
| 8MK376720091 | **883956** |
| 8MK376720101 | **730572** |
| 8MK376720111 | **816552** |
| 8MK376720141 | **731818** |
| 8MK376720151 | **732617** |
| 8MK376720161 | **730563** |
| 8MK376720171 | **730590** |
| 8MK376720181 | **730968** |
| 8MK376720211 | **731779** |
| 8MK376720221 | **731779** |
| 8MK376720221 | **731782** |
| 8MK376720231 | **731816** |
| 8MK376720241 | **732620** |
| 8MK376720251 | **730124** |
| 8MK376720251 | **819176** |
| 8MK376720261 | **731734** |

| IAM | Valeo |
|---|---|
| **BEHR - HELLA** | |
| 8MK376720271 | **734772** |
| 8MK376720281 | **732731** |
| 8MK376720291 | **732732** |
| 8MK376720301 | **732735** |
| 8MK376720311 | **734303** |
| 8MK376720321 | **811073** |
| 8MK376720331 | **734239** |
| 8MK376720341 | **732503** |
| 8MK376720351 | **732789** |
| 8MK376720361 | **731572** |
| 8MK376720371 | **811056** |
| 8MK376720381 | **731292** |
| 8MK376720391 | **816890** |
| 8MK376720401 | **731393** |
| 8MK376720411 | **731525** |
| 8MK376720421 | **732724** |
| 8MK376720421 | **732795** |
| 8MK376720441 | **730551** |
| 8MK376720451 | **731269** |
| 8MK376720471 | **810956** |
| 8MK376720481 | **731385** |
| 8MK376720481 | **732797** |
| 8MK376720491 | **731387** |
| 8MK376720501 | **732786** |
| 8MK376720511 | **732790** |
| 8MK376720521 | **816655** |
| 8MK376720531 | **732123** |
| 8MK376720551 | **732120** |
| 8MK376720591 | **731537** |
| 8MK376720591 | **732361** |
| 8MK376720601 | **731757** |
| 8MK376720611 | **961149** |
| 8MK376720641 | **731848** |
| 8MK376720641 | **732348** |
| 8MK376720651 | **732795** |
| 8MK376720651 | **732724** |
| 8MK376720661 | **732122** |
| 8MK376720751 | **731972** |
| 8MK376720761 | **731973** |
| 8MK376720771 | **734220** |
| 8MK376720781 | **732108** |
| 8MK376721001 | **732368** |
| 8MK376721011 | **730595** |
| 8MK376721031 | **734378** |
| 8MK376721041 | **734379** |
| 8MK376721351 | **730229** |
| 8MK376721361 | **730883** |
| 8MK376721381 | **734674** |
| 8MK376721391 | **732471** |
| 8MK376721411 | **734806** |
| 8MK376721441 | **732472** |
| 8MK376721631 | **734689** |
| 8MK376721651 | **734807** |
| 8MK376721681 | **818749** |
| 8MK376722001 | **734875** |
| 8MK376722031 | **734876** |
| 8MK376722041 | **734878** |
| 8MK376722051 | **734877** |
| 8MK376722261 | **734689** |
| 8MK376722421 | **731738** |
| 8MK376722431 | **732608** |
| 8MK376722441 | **732606** |
| 8MK376722481 | **810947** |
| 8MK376722511 | **731512** |
| 8MK376722531 | **819422** |
| 8MK376722561 | **732471** |
| 8MK376722571 | **732596** |
| 8MK376722581 | **732484** |
| 8MK376722631 | **730485** |
| 8MK376722661 | **731441** |
| 8MK376722671 | **730436** |
| 8MK376722681 | **732323** |
| 8MK376723221 | **734379** |
| 8MK376723531 | **734379** |
| 8MK376724501 | **816649** |
| 8MK376724501 | **730334** |
| 8MK376724511 | **734109** |
| 8MK376724531 | **734110** |

| IAM | Valeo |
|---|---|
| **BEHR - HELLA** | |
| 8MK376724571 | **735214** |
| 8MK376724581 | **732750** |
| 8MK376724601 | **734492** |
| 8MK376724621 | **731095** |
| 8MK376724621 | **731698** |
| 8MK376724641 | **731830** |
| 8MK376724661 | **734213** |
| 8MK376724681 | **734129** |
| 8MK376724681 | **734481** |
| 8MK376724711 | **732518** |
| 8MK376724721 | **734466** |
| 8MK376724771 | **731639** |
| 8MK376724791 | **735171** |
| 8MK376726531 | **731846** |
| 8MK376726561 | **731441** |
| 8MK376726561 | **731685** |
| 8MK376726601 | **732780** |
| 8MK376726611 | **732613** |
| 8MK376726651 | **734515** |
| 8MK376726671 | **734488** |
| 8MK376726681 | **731243** |
| 8MK376726691 | **732718** |
| 8MK376726701 | **732872** |
| 8MK376726731 | **732720** |
| 8MK376726751 | **732877** |
| 8MK376726771 | **732876** |
| 8MK376726781 | **734231** |
| 8MK376726791 | **732487** |
| 8MK376726791 | **734261** |
| 8MK376727701 | **732543** |
| 8MK376727751 | **731461** |
| 8MK376727761 | **732497** |
| 8MK376727771 | **883751** |
| 8MK376728391 | **735097** |
| 8MK376728781 | **735042** |
| 8MK376728791 | **735097** |
| 8MK376728871 | **735042** |
| 8MK376730561 | **734379** |
| 8MK376733671 | **735097** |
| 8MK376745081 | **734282** |
| 8MK376745091 | **735255** |
| 8MK376750041 | **731805** |
| 8MK376750071 | **731552** |
| 8MK376750241 | **732886** |
| 8MK376750261 | **735053** |
| 8MK376750271 | **734483** |
| 8MK376750281 | **734410** |
| 8MK376753641 | **735416** |
| 8MK376753731 | **735574** |
| 8MK376753741 | **735572** |
| 8MK376753751 | **735573** |
| 8MK376754001 | **735165** |
| 8MK376754521 | **735564** |
| 8MK376754551 | **735586** |
| 8MK376762041 | **732488** |
| 8MK376762061 | **734266** |
| 8MK376762071 | **735589** |
| 8MK376762081 | **734950** |
| 8MK376762091 | **734258** |
| 8MK376762111 | **734903** |
| 8MK376762121 | **734965** |
| 8MK376762141 | **734267** |
| 8MK376762151 | **734256** |
| 8MK376762211 | **732487** |
| 8MK376762221 | **734261** |
| 8MK376762241 | **734949** |
| 8MK376762261 | **734784** |
| 8MK376762291 | **735606** |
| 8MK376762331 | **734259** |
| 8MK376762341 | **734909** |
| 8MK376762531 | **734596** |
| 8MK376762541 | **732483** |
| 8MK376762551 | **734761** |
| 8MK376762551 | **734766** |
| 8MK376762561 | **734252** |
| 8MK376762571 | **734765** |
| 8MK376762771 | **734253** |
| 8MK376762771 | **734960** |

| IAM | Valeo |
|---|---|
| **BEHR - HELLA** | |
| 8MK376763001 | **734587** |
| 8MK376763091 | **734408** |
| 8MK376763111 | **734408** |
| 8MK376763211 | **735563** |
| 8MK376763311 | **734784** |
| 8MK376763401 | **734264** |
| 8MK376764001 | **730484** |
| 8MK376764001 | **730858** |
| 8MK376764011 | **730124** |
| 8MK376764021 | **734862** |
| 8MK376764031 | **735046** |
| 8MK376764051 | **731011** |
| 8MK376764051 | **731550** |
| 8MK376764061 | **730375** |
| 8MK376764091 | **734291** |
| 8MK376764091 | **734293** |
| 8MK376764101 | **734293** |
| 8MK376764111 | **734292** |
| 8MK376764121 | **734287** |
| 8MK376764131 | **734288** |
| 8MK376764141 | **734785** |
| 8MK376764161 | **734696** |
| 8MK376764231 | **734699** |
| 8MK376764251 | **734392** |
| 8MK376764261 | **734321** |
| 8MK376764271 | **734319** |
| 8MK376764281 | **734320** |
| 8MK376764291 | **734272** |
| 8MK376764301 | **734272** |
| 8MK376764311 | **734273** |
| 8MK376764321 | **734274** |
| 8MK376764331 | **735021** |
| 8MK376764351 | **735045** |
| 8MK376764381 | **735048** |
| 8MK376764401 | **735271** |
| 8ML376719031 | **818727** |
| 8ML376720391 | **816890** |
| 8ML376723021 | **817931** |
| 8ML376723061 | **817919** |
| 8ML376723061 | **817917** |
| 8ML376723071 | **817393** |
| 8ML376723101 | **817924** |
| 8ML376723111 | **817388** |
| 8ML376723131 | **817905** |
| 8ML376723141 | **817907** |
| 8ML376723181 | **817916** |
| 8ML376723191 | **817903** |
| 8ML376723201 | **818728** |
| 8ML376723221 | **817927** |
| 8ML376723251 | **817766** |
| 8ML376723261 | **817765** |
| 8ML376723261 | **817764** |
| 8ML376723271 | **817761** |
| 8ML376723281 | **818809** |
| 8ML376723291 | **817926** |
| 8ML376723311 | **817759** |
| 8ML376723321 | **817762** |
| 8ML376723331 | **817764** |
| 8ML376723341 | **817765** |
| 8ML376723351 | **817925** |
| 8ML376723361 | **817923** |
| 8ML376723371 | **817920** |
| 8ML376723401 | **817911** |
| 8ML376723411 | **818759** |
| 8ML376723421 | **817872** |
| 8ML376723431 | **818713** |
| 8ML376723441 | **818714** |
| 8ML376723471 | **818814** |
| 8ML376723481 | **818815** |
| 8ML376723501 | **818796** |
| 8ML376723521 | **818808** |
| 8ML376723531 | **818807** |
| 8ML376723541 | **818795** |
| 8ML376723551 | **818806** |
| 8ML376723561 | **818822** |
| 8ML376723651 | **818740** |
| 8ML376723751 | **818743** |
| 8ML376723761 | **818744** |

| IAM | Valeo |
|---|---|
| **BEHR - HELLA** | |
| 8ML376723771 | **817369** |
| 8ML376724001 | **817368** |
| 8ML376724031 | **816846** |
| 8ML376724041 | **817772** |
| 8ML376724101 | **818751** |
| 8ML376724231 | **818778** |
| 8ML376724251 | **818735** |
| 8ML376724301 | **818736** |
| 8ML376724331 | **816853** |
| 8ML376727531 | **817941** |
| 8ML376727551 | **817773** |
| 8ML376727571 | **817632** |
| 8ML376727581 | **817625** |
| 8ML376727601 | **817892** |
| 8ML376727641 | **816851** |
| 8ML376746111 | **818899** |
| 8ML376746121 | **818898** |
| 8ML376746151 | **818213** |
| 8ML376746201 | **818899** |
| 8ML376746231 | **818209** |
| 8ML376746571 | **818834** |
| 8ML376746621 | **817888** |
| 8ML376746631 | **817891** |
| 8ML376746651 | **818802** |
| 8ML376746671 | **818229** |
| 8ML376755751 | **818701** |
| 8ML376755781 | **816731** |
| 8ML376758131 | **818777** |
| 8ML376758141 | **818778** |
| 8ML376758181 | **818871** |
| 8ML376758191 | **818879** |
| 8ML376758201 | **818873** |
| 8ML376758211 | **818874** |
| 8ML376758221 | **818875** |
| 8ML376760611 | **818722** |
| 8ML376765001 | **817888** |
| 8ML376765011 | **818800** |
| 8ML376765021 | **817891** |
| 8ML376765031 | **818717** |
| 8ML376765041 | **818802** |
| 8ML376765061 | **818794** |
| 8ML376765071 | **818797** |
| 8ML376765091 | **818210** |
| 8ML376765101 | **818801** |
| 8ML376776271 | **817881** |
| 8ML376776281 | **817879** |
| 8ML376776291 | **818711** |
| 8ML376776291 | **818712** |
| 8ML376776571 | **817936** |
| 8ML376776671 | **816784** |
| 8ML376776681 | **816793** |
| 8ML376776731 | **816731** |
| 8ML376776741 | **816732** |
| 8ML376776751 | **816736** |
| 8ML376776761 | **816733** |
| 8ML376776771 | **818724** |
| 8ML376777061 | **817770** |
| 8ML376777071 | **817774** |
| 8MO376726221 | **817943** |
| **CTR GROUP** | |
| 1223008 | **816910** |
| 1223015 | **816866** |
| 1223023 | **817375** |
| 1223032 | **817225** |
| 1223033 | **816898** |
| 1223034 | **817232** |
| 1223038 | **816992** |
| 1223057 | **817492** |
| 1223058 | **816900** |
| 1223059 | **817252** |
| 1223062 | **816924** |
| 1223066 | **816960** |
| 1223067 | **816902** |
| 1223070 | **817507** |
| 1223084 | **817674** |
| 1223089 | **816863** |
| 1223096 | **816865** |

## CTR GROUP

| IAM | Valeo |
|---|---|
| 1223100 | 816867 |
| 1223102 | 816912 |
| 1223104 | 817197 |
| 1223105 | 816839 |
| 1223108 | 817171 |
| 1223114 | 816967 |
| 1223115 | 817247 |
| 1223118 | 817427 |
| 1223119 | 816967 |
| 1223134 | 817244 |
| 1223142 | 817666 |
| 1223143 | 817665 |
| 1223144 | 817840 |
| 1223155 | 817675 |
| 1223185 | 816852 |
| 1223190 | 816921 |
| 1223198 | 817067 |
| 1223200 | 816803 |
| 1223201 | 817230 |
| 1223202 | 816850 |
| 1223203 | 816984 |
| 1223204 | 816977 |
| 1223205 | 816964 |
| 1223208 | 817283 |
| 1223209 | 817508 |
| 1223210 | 817464 |
| 1223214 | 816835 |
| 1223215 | 817375 |
| 1223241 | 817061 |
| 1223242 | 816756 |
| 1223243 | 816865 |
| 1223303 | 817253 |
| 1223310 | 817253 |
| 1223321 | 817607 |
| 1223322 | 817248 |
| 1223323 | 817383 |
| 1223324 | 817405 |
| 1223353 | 816922 |
| 1223372 | 817562 |
| 1223374 | 817011 |
| 1223376 | 816891 |
| 1223377 | 817504 |
| 1223381 | 816949 |
| 1223382 | 817848 |
| 1223398 | 817246 |
| 1223399 | 817247 |
| 1223400 | 816908 |
| 1223401 | 816948 |
| 1223426 | 817411 |
| 1223427 | 816985 |
| 1223432 | 817385 |
| 1223445 | 817412 |
| 1223465 | 817527 |
| 1223473 | 817684 |
| 1223474 | 817685 |
| 1223492 | 817505 |
| 1223494 | 817506 |
| 1223602 | 816945 |
| 1223602 | 817073 |
| 1223603 | 817445 |
| 1223611 | 817493 |
| 1223622 | 817567 |
| 1223624 | 817567 |
| 1223625 | 817664 |
| 1223706 | 817023 |
| 1223707 | 817023 |
| 1223708 | 817022 |

## BEHR - HELLA

| IAM | Valeo |
|---|---|
| 8MK376764481 | 730484 |
| 8MK376766521 | 731723 |
| 8MK376773561 | 735415 |
| 8MK376774041 | 734333 |
| 8MK376781001 | 732963 |
| 8MK376781031 | 734753 |
| 8MK376781061 | 734269 |
| 8MK376781071 | 734268 |
| 8MK376781091 | 735120 |

## BEHR - HELLA

| IAM | Valeo |
|---|---|
| 8MK376781091 | 734335 |
| 8MK376790061 | 735445 |

### AVA COOLING SYSTEMS

| IAM | Valeo |
|---|---|
| VW2272 | 735120 |

## DASIS

| IAM | Valeo |
|---|---|
| 010001N | 734733 |
| 010004N | 816710 |
| 010006N | 734283 |
| 010009N | 731559 |
| 010009N | 731251 |
| 010080N | 811010 |
| 010090N | 811068 |
| 010120N | 811071 |
| 010140N | 816710 |
| 010180N | 732011 |
| 010200N | 811389 |
| 010250N | 731251 |
| 010280N | 731283 |
| 010290N | 731561 |
| 010310N | 731591 |
| 010320N | 732012 |
| 010330N | 732013 |
| 010340N | 732248 |
| 011010N | 732696 |
| 011050N | 732722 |
| 011060N | 732505 |
| 011070N | 731283 |
| 017000N | 817861 |
| 017001N | 817862 |
| 017002N | 818794 |
| 017250N | 817856 |
| 018003N | 696108 |
| 018004N | 696108 |
| 018005N | 696109 |
| 018006N | 696111 |
| 020110N | 730172 |
| 020190N | 731243 |
| 020220N | 730119 |
| 020280N | 731215 |
| 030000N | 883799 |
| 030020N | 883799 |
| 040007N | 732862 |
| 040008N | 733062 |
| 040011N | 732864 |
| 040013N | 732845 |
| 040021N | 732872 |
| 040022N | 734332 |
| 040023N | 734335 |
| 040026N | 734333 |
| 040030N | 731267 |
| 040038N | 732710 |
| 040041N | 734415 |
| 040170N | 883718 |
| 040190N | 883720 |
| 040210N | 730947 |
| 040210N | 883727 |
| 040210N | 731271 |
| 040230N | 883864 |
| 040240N | 731265 |
| 040330N | 730947 |
| 040330N | 883727 |
| 040350N | 730948 |
| 040380N | 730485 |
| 040390N | 730946 |
| 040400N | 731266 |
| 040400N | 730945 |
| 040410N | 730954 |
| 040410N | 731268 |
| 040430N | 883818 |
| 040440N | 883819 |
| 040450N | 883820 |
| 040470N | 731386 |
| 040480N | 731387 |
| 040490N | 731385 |
| 040520N | 883820 |

## DASIS

| IAM | Valeo |
|---|---|
| 040630N | 883849 |
| 040670N | 883869 |
| 040680N | 883870 |
| 040690N | 883871 |
| 040720N | 731267 |
| 040720N | 731268 |
| 040720N | 730955 |
| 040770N | 730504 |
| 040780N | 730505 |
| 040810N | 731607 |
| 040870N | 730503 |
| 040900N | 734586 |
| 041000N | 732438 |
| 041020N | 883905 |
| 041030N | 730971 |
| 041130N | 734606 |
| 041200N | 731401 |
| 041230N | 731032 |
| 041240N | 730955 |
| 041260N | 731025 |
| 041290N | 732436 |
| 041300N | 731127 |
| 041310N | 730956 |
| 041350N | 732437 |
| 041360N | 730629 |
| 041370N | 816703 |
| 041610N | 730955 |
| 041620N | 730954 |
| 041900N | 731005 |
| 041910N | 731006 |
| 041920N | 731007 |
| 041930N | 731008 |
| 041950N | 732797 |
| 041960N | 732698 |
| 041970N | 732317 |
| 041990N | 732790 |
| 042110N | 730485 |
| 043820N | 731760 |
| 043880N | 734853 |
| 044000N | 734739 |
| 044001N | 734740 |
| 046110N | 817943 |
| 047000N | 817767 |
| 047001N | 817764 |
| 047003N | 817556 |
| 047004N | 818834 |
| 047005N | 817653 |
| 047006N | 818795 |
| 047007N | 818814 |
| 047009N | 817555 |
| 047010N | 817372 |
| 047011N | 818828 |
| 047013N | 818815 |
| 047014N | 817457 |
| 047015N | 817635 |
| 047016N | 817634 |
| 047017N | 818213 |
| 047019N | 818732 |
| 047022N | 818214 |
| 047080N | 817934 |
| 047120N | 818719 |
| 047140N | 817764 |
| 047190N | 817762 |
| 047200N | 817624 |
| 047270N | 817765 |
| 047280N | 818812 |
| 047290N | 817486 |
| 047300N | 817459 |
| 047310N | 818813 |
| 048002N | 698357 |
| 048003N | 698358 |
| 048029N | 696042 |
| 048070N | 696031 |
| 048160N | 696034 |
| 048170N | 698370 |
| 048260N | 698367 |
| 048340N | 696047 |
| 048370N | 696039 |

## DASIS

| IAM | Valeo |
|---|---|
| 048390N | 696042 |
| 048390N | 696041 |
| 048400N | 696041 |
| 048460N | 696057 |
| 048490N | 696043 |
| 048520N | 696179 |
| 048530N | 696067 |
| 048540N | 698371 |
| 048550N | 696032 |
| 048560N | 698359 |
| 048630N | 698373 |
| 048640N | 698371 |
| 048690N | 696034 |
| 050003N | 731508 |
| 050004N | 734276 |
| 050030N | 734277 |
| 050032N | 734894 |
| 050042N | 735195 |
| 050044N | 735165 |
| 050045N | 735194 |
| 050047N | 735165 |
| 050240N | 732456 |
| 050580N | 819395 |
| 050620N | 810947 |
| 050620N | 819422 |
| 050670N | 731518 |
| 050710N | 734614 |
| 050750N | 734615 |
| 050780N | 731509 |
| 050790N | 731508 |
| 050850N | 730365 |
| 050900N | 732099 |
| 050930N | 731766 |
| 050940N | 819413 |
| 050940N | 819412 |
| 050950N | 734301 |
| 050950N | 819413 |
| 050960N | 819414 |
| 051006N | 734898 |
| 051040N | 819418 |
| 051080N | 734301 |
| 051140N | 730365 |
| 051450N | 734615 |
| 051470N | 819397 |
| 051510N | 819418 |
| 051540N | 734394 |
| 051670N | 731512 |
| 051670N | 731511 |
| 051680N | 732593 |
| 051800N | 732099 |
| 054000N | 734329 |
| 057000N | 817873 |
| 057002N | 817874 |
| 057003N | 817877 |
| 057004N | 818716 |
| 057005N | 818796 |
| 057008N | 817876 |
| 057009N | 818713 |
| 057010N | 817387 |
| 057011N | 818714 |
| 057020N | 817875 |
| 058048N | 696119 |
| 058050N | 696120 |
| 058052N | 696121 |
| 058057N | 696123 |
| 060003N | 732520 |
| 060004N | 734455 |
| 060006N | 734281 |
| 060007N | 734454 |
| 060009N | 731176 |
| 060012N | 731584 |
| 060013N | 731181 |
| 060014N | 732564 |
| 060016N | 732517 |
| 060018N | 731180 |
| 060019N | 731176 |
| 060020N | 883464 |
| 060028N | 732831 |

## DASIS

| IAM | Valeo |
|---|---|
| 060029N | 732831 |
| 060033N | 732930 |
| 060034N | 732930 |
| 060040N | 883765 |
| 060049N | 732881 |
| 060050N | 731389 |
| 060051N | 734338 |
| 060057N | 732910 |
| 060057N | 732886 |
| 060057N | 732890 |
| 060057N | 732891 |
| 060057N | 732892 |
| 060057N | 732893 |
| 060057N | 732904 |
| 060057N | 732906 |
| 060057N | 732908 |
| 060057N | 732909 |
| 060060N | 883715 |
| 060080N | 883774 |
| 060090N | 883773 |
| 060120N | 730040 |
| 060120N | 810919 |
| 060140N | 811380 |
| 060150N | 810811 |
| 060170N | 730957 |
| 060180N | 730958 |
| 060190N | 816554 |
| 060220N | 810836 |
| 060240N | 730959 |
| 060250N | 816715 |
| 060260N | 731010 |
| 060260N | 816716 |
| 060270N | 883866 |
| 060310N | 730508 |
| 060320N | 819428 |
| 060330N | 731009 |
| 060360N | 961149 |
| 060380N | 730491 |
| 060390N | 730498 |
| 060400N | 816706 |
| 060420N | 730630 |
| 060430N | 730494 |
| 060440N | 810954 |
| 060450N | 730960 |
| 060460N | 730507 |
| 060460N | 734454 |
| 060470N | 730982 |
| 060490N | 731173 |
| 060520N | 730934 |
| 060530N | 730635 |
| 060540N | 730897 |
| 060550N | 730896 |
| 060560N | 731165 |
| 060570N | 731166 |
| 060600N | 731611 |
| 060610N | 730997 |
| 060615N | 731611 |
| 060620N | 730995 |
| 060630N | 730999 |
| 060640N | 731177 |
| 060650N | 731168 |
| 060660N | 731166 |
| 060680N | 730632 |
| 060690N | 730927 |
| 060700N | 731389 |
| 060700N | 732520 |
| 060710N | 730983 |
| 060720N | 731180 |
| 060730N | 731181 |
| 060740N | 731176 |
| 060770N | 883686 |
| 060780N | 731528 |
| 060780N | 731498 |
| 060790N | 731297 |
| 060800N | 731185 |
| 060810N | 731527 |
| 060820N | 731530 |
| 060840N | 731295 |

## DASIS

| IAM | Valeo |
|---|---|
| 060850N | 731296 |
| 060890N | 731570 |
| 060920N | 731527 |
| 060940N | 731743 |
| 060960N | 731391 |
| 060980N | 731584 |
| 060990N | 732518 |
| 061000N | 732517 |
| 061010N | 732534 |
| 061020N | 732577 |
| 061030N | 732909 |
| 061040N | 732887 |
| 061050N | 732620 |
| 061070N | 732794 |
| 061080N | 731530 |
| 061090N | 732910 |
| 061110N | 732891 |
| 061120N | 732892 |
| 061130N | 732890 |
| 061140N | 732807 |
| 061150N | 732893 |
| 061170N | 732618 |
| 061180N | 734760 |
| 061190N | 732535 |
| 066050N | 816751 |
| 067005N | 817651 |
| 067020N | 816613 |
| 067030N | 816699 |
| 067040N | 816851 |
| 067050N | 816823 |
| 067060N | 816919 |
| 067080N | 817437 |
| 068008N | 698342 |
| 068036N | 698304 |
| 068740N | 698444 |
| 068800N | 698375 |
| 070002N | 734215 |
| 070006N | 731654 |
| 070012N | 731665 |
| 070063N | 731090 |
| 070067N | 732903 |
| 070069N | 734708 |
| 070077N | 734705 |
| 070077N | 734736 |
| 070078N | 734246 |
| 070083N | 734473 |
| 070090N | 819219 |
| 070112N | 735204 |
| 070127N | 734247 |
| 070150N | 731664 |
| 070160N | 731202 |
| 070220N | 734671 |
| 070250N | 732484 |
| 070280N | 734427 |
| 070290N | 732592 |
| 070300N | 731187 |
| 070310N | 731662 |
| 070320N | 732528 |
| 070340N | 731664 |
| 070430N | 731287 |
| 070430N | 732718 |
| 070450N | 732405 |
| 070500N | 732589 |
| 070660N | 732596 |
| 070840N | 734819 |
| 070920N | 731087 |
| 070940N | 731090 |
| 071080N | 731188 |
| 071130N | 731085 |
| 071160N | 730404 |
| 071170N | 730407 |
| 071180N | 730408 |
| 071190N | 731082 |
| 071190N | 731083 |
| 071230N | 731147 |
| 071250N | 730406 |
| 071300N | 731656 |
| 071340N | 731083 |

| DASIS | Valeo |
|---|---|
| 071350N | 731134 |
| 071440N | 732718 |
| 071450N | 732529 |
| 071450N | 732528 |
| 071460N | 731670 |
| 071490N | 731188 |
| 071520N | 731090 |
| 071530N | 731193 |
| 071710N | 731654 |
| 071790N | 731657 |
| 071830N | 731202 |
| 071840N | 731661 |
| 072250N | 731659 |
| 072330N | 734446 |
| 073150N | 731287 |
| 073170N | 731675 |
| 073170N | 731674 |
| 073190N | 734427 |
| 073190N | 732484 |
| 073200N | 731261 |
| 077000N | 817640 |
| 080000N | 731592 |
| 080001N | 731611 |
| 080005N | 732503 |
| 080007N | 732623 |
| 080019N | 732787 |
| 080020N | 883053 |
| 080021N | 734228 |
| 080022N | 734229 |
| 080024N | 734692 |
| 080025N | 734228 |
| 080026N | 734221 |
| 080028N | 732685 |
| 080030N | 883428 |
| 080031N | 811071 |
| 080041N | 731302 |
| 080042N | 734219 |
| 080043N | 732218 |
| 080046N | 732913 |
| 080048N | 734224 |
| 080054N | 734768 |
| 080055N | 735172 |
| 080056N | 735172 |
| 080057N | 735171 |
| 080058N | 735171 |
| 080059N | 732792 |
| 080061N | 732851 |
| 080062N | 734220 |
| 080066N | 732924 |
| 080067N | 732925 |
| 080068N | 732851 |
| 080071N | 734457 |
| 080073N | 732923 |
| 080078N | 732913 |
| 080079N | 734362 |
| 080087N | 735042 |
| 080100N | 730519 |
| 080120N | 883806 |
| 080130N | 883806 |
| 080160N | 883811 |
| 080170N | 883812 |
| 080180N | 883813 |
| 080190N | 883825 |
| 080190N | 811387 |
| 080240N | 883827 |
| 080270N | 816707 |
| 080280N | 811385 |
| 080290N | 811386 |
| 080320N | 811069 |
| 080330N | 811073 |
| 080340N | 811071 |
| 080430N | 810984 |
| 080460N | 811392 |
| 080480N | 811392 |
| 080490N | 730520 |
| 080520N | 730976 |
| 080550N | 811067 |
| 080560N | 730309 |

| DASIS | Valeo |
|---|---|
| 080560N | 730520 |
| 080570N | 731979 |
| 080580N | 731304 |
| 080580N | 734239 |
| 080590N | 811070 |
| 080630N | 811070 |
| 080660N | 816711 |
| 080670N | 731562 |
| 080680N | 730489 |
| 080700N | 731591 |
| 080700N | 810949 |
| 080790N | 731981 |
| 080810N | 730980 |
| 080820N | 730980 |
| 080830N | 730981 |
| 080840N | 730990 |
| 080840N | 883813 |
| 080850N | 730991 |
| 080900N | 730995 |
| 080950N | 730838 |
| 080960N | 731972 |
| 080970N | 731974 |
| 080980N | 731975 |
| 080990N | 731976 |
| 081000N | 731977 |
| 081010N | 731978 |
| 081030N | 732005 |
| 081030N | 731304 |
| 081050N | 731302 |
| 081060N | 731306 |
| 081090N | 732787 |
| 081090N | 734220 |
| 081100N | 732578 |
| 081130N | 731592 |
| 081170N | 732688 |
| 081220N | 731977 |
| 081330N | 732557 |
| 081350N | 731562 |
| 081360N | 734220 |
| 081380N | 734225 |
| 081390N | 732580 |
| 081400N | 732578 |
| 081410N | 732913 |
| 081430N | 732913 |
| 081450N | 731973 |
| 081470N | 732005 |
| 081480N | 732788 |
| 081520N | 732789 |
| 081540N | 732006 |
| 081550N | 732005 |
| 081560N | 732007 |
| 081570N | 732147 |
| 081580N | 731558 |
| 081590N | 732705 |
| 081610N | 731593 |
| 082037N | 735040 |
| 082038N | 735041 |
| 086150N | 816666 |
| 087000N | 817879 |
| 087002N | 817881 |
| 087004N | 818725 |
| 087005N | 818823 |
| 087007N | 818224 |
| 087008N | 817882 |
| 087009N | 818726 |
| 087010N | 817884 |
| 087011N | 818711 |
| 087011N | 818712 |
| 087012N | 818824 |
| 087013N | 818229 |
| 087015N | 818897 |
| 087018N | 818897 |
| 087030N | 817898 |
| 087040N | 817896 |
| 087050N | 816764 |
| 087060N | 816763 |
| 087110N | 817895 |
| 087120N | 817880 |

| DASIS | Valeo |
|---|---|
| 087170N | 817632 |
| 088000N | 698484 |
| 088025N | 696098 |
| 088034N | 696197 |
| 088044N | 698180 |
| 088046N | 698179 |
| 088052N | 696100 |
| 088053N | 696098 |
| 088054N | 696095 |
| 088056N | 696197 |
| 088056N | 696106 |
| 088061N | 698562 |
| 088077N | 698483 |
| 088077N | 698484 |
| 088078N | 696095 |
| 088082N | 696197 |
| 088083N | 696106 |
| 088084N | 696104 |
| 088086N | 698786 |
| 088089N | 698788 |
| 088090N | 696099 |
| 088230N | 698178 |
| 088260N | 698179 |
| 088270N | 698178 |
| 088370N | 696094 |
| 090001N | 734288 |
| 090009N | 734272 |
| 090010N | 819151 |
| 090011N | 734321 |
| 090016N | 734273 |
| 090017N | 734274 |
| 090030N | 730110 |
| 090031N | 731724 |
| 090034N | 730631 |
| 090040N | 730483 |
| 090043N | 731257 |
| 090073N | 734288 |
| 090081N | 734272 |
| 090130N | 883954 |
| 090140N | 730484 |
| 090140N | 731299 |
| 090150N | 730631 |
| 090150N | 811047 |
| 090350N | 730114 |
| 090370N | 883956 |
| 090490N | 730116 |
| 090610N | 730857 |
| 090640N | 731735 |
| 090680N | 730856 |
| 090680N | 730858 |
| 090690N | 730589 |
| 090690N | 730590 |
| 090710N | 731011 |
| 090710N | 731550 |
| 090820N | 730123 |
| 090840N | 731300 |
| 090850N | 730566 |
| 090890N | 730968 |
| 090900N | 730559 |
| 090920N | 731257 |
| 090940N | 730110 |
| 091040N | 731299 |
| 091080N | 732003 |
| 091270N | 731734 |
| 091280N | 731992 |
| 091350N | 731736 |
| 091360N | 731617 |
| 091450N | 732731 |
| 091470N | 732732 |
| 091480N | 732735 |
| 091530N | 731724 |
| 091610N | 734286 |
| 092110N | 811046 |
| 092120N | 730842 |
| 092270N | 731591 |
| 092270N | 731595 |
| 092270N | 730594 |
| 092270N | 730117 |

| DASIS | Valeo |
|---|---|
| 092270N | 810949 |
| 092650N | 730563 |
| 097000N | 817388 |
| 097001N | 817393 |
| 097002N | 817885 |
| 097003N | 817888 |
| 097005N | 817238 |
| 097006N | 818802 |
| 097007N | 818797 |
| 097130N | 817887 |
| 097140N | 818718 |
| 098037N | 696151 |
| 098038N | 696153 |
| 098039N | 696158 |
| 098041N | 696160 |
| 098047N | 696157 |
| 098056N | 696151 |
| 098059N | 696152 |
| 098071N | 696149 |
| 098092N | 696150 |
| 098093N | 696153 |
| 098094N | 696154 |
| 098099N | 696158 |
| 098101N | 696159 |
| 098103N | 696276 |
| 098105N | 696277 |
| 098290N | 696149 |
| 098300N | 696152 |
| 098320N | 696154 |
| 098330N | 696150 |
| 100003N | 731434 |
| 100005N | 731635 |
| 100013N | 731100 |
| 100013N | 731101 |
| 100014N | 731434 |
| 100015N | 731473 |
| 100016N | 731474 |
| 100017N | 731459 |
| 100018N | 731635 |
| 100019N | 734113 |
| 100020N | 734114 |
| 100021N | 731634 |
| 100023N | 734110 |
| 100026N | 734218 |
| 100027N | 734716 |
| 100028N | 734717 |
| 100050N | 730411 |
| 100070N | 731101 |
| 100070N | 730168 |
| 100170N | 731211 |
| 100210N | 734109 |
| 100270N | 731434 |
| 100310N | 731629 |
| 100321N | 730316 |
| 100321N | 731634 |
| 100321N | 819193 |
| 100330N | 730417 |
| 100340N | 731634 |
| 100350N | 819193 |
| 100360N | 731100 |
| 100360N | 731101 |
| 100360N | 734109 |
| 100370N | 730316 |
| 100430N | 734111 |
| 100450N | 730429 |
| 100460N | 730316 |
| 100490N | 730429 |
| 100530N | 734624 |
| 100550N | 731469 |
| 100560N | 731076 |
| 100560N | 731471 |
| 100590N | 732323 |
| 100600N | 730423 |
| 100610N | 731101 |
| 100620N | 730430 |
| 100640N | 730591 |
| 100670N | 730565 |
| 100670N | 732758 |

| DASIS | Valeo |
|---|---|
| 100680N | 730565 |
| 100710N | 731434 |
| 100710N | 731459 |
| 100710N | 731474 |
| 100720N | 731458 |
| 100720N | 731473 |
| 100750N | 731467 |
| 100860N | 734747 |
| 100870N | 731467 |
| 100890N | 731434 |
| 100940N | 731630 |
| 100950N | 734623 |
| 100960N | 730970 |
| 101250N | 730424 |
| 101260N | 730424 |
| 101300N | 734112 |
| 103000N | 731459 |
| 103000N | 731474 |
| 103001N | 731458 |
| 103001N | 731473 |
| 103002N | 731434 |
| 103002N | 731469 |
| 103003N | 731434 |
| 110001N | 730437 |
| 110003N | 732346 |
| 110004N | 732346 |
| 110005N | 734122 |
| 110010N | 730241 |
| 110022N | 734581 |
| 110070N | 731036 |
| 110070N | 731042 |
| 110090N | 730436 |
| 110100N | 731142 |
| 110210N | 731139 |
| 110240N | 732345 |
| 110240N | 734120 |
| 110270N | 731073 |
| 110280N | 732345 |
| 110360N | 731142 |
| 110380N | 731437 |
| 110480N | 731072 |
| 110480N | 732326 |
| 110510N | 732538 |
| 110510N | 730440 |
| 110520N | 732475 |
| 110550N | 732538 |
| 110630N | 730435 |
| 110660N | 731417 |
| 110680N | 731461 |
| 110720N | 731036 |
| 110760N | 730435 |
| 110800N | 732326 |
| 110900N | 731073 |
| 110910N | 731372 |
| 110970N | 731072 |
| 110980N | 730435 |
| 110990N | 731466 |
| 111000N | 731472 |
| 111020N | 732325 |
| 111040N | 730437 |
| 111160N | 734627 |
| 111230N | 734123 |
| 111240N | 734124 |
| 111280N | 732726 |
| 111290N | 734119 |
| 120003N | 732743 |
| 120009N | 734805 |
| 120044N | 732460 |
| 120049N | 819387 |
| 120050N | 819379 |
| 120054N | 731294 |
| 120068N | 732849 |
| 120069N | 734668 |
| 120070N | 734877 |
| 120071N | 734379 |
| 120074N | 734378 |
| 120082N | 734876 |
| 120083N | 734878 |

| DASIS | Valeo |
|---|---|
| 120094N | 732855 |
| 120220N | 734794 |
| 120280N | 732460 |
| 120350N | 732458 |
| 120360N | 819368 |
| 120390N | 810869 |
| 120400N | 883876 |
| 120430N | 734798 |
| 120450N | 819373 |
| 120460N | 819201 |
| 120470N | 819376 |
| 120480N | 819387 |
| 120510N | 883860 |
| 120530N | 732591 |
| 120580N | 735231 |
| 120590N | 732446 |
| 120700N | 731294 |
| 120720N | 732447 |
| 120740N | 731805 |
| 120790N | 731808 |
| 120810N | 732450 |
| 120840N | 731804 |
| 120940N | 734799 |
| 120950N | 732605 |
| 121040N | 731293 |
| 121070N | 734749 |
| 121090N | 731292 |
| 121110N | 731291 |
| 121120N | 732451 |
| 121160N | 731807 |
| 121170N | 732462 |
| 121180N | 732315 |
| 121220N | 732587 |
| 121360N | 731808 |
| 121400N | 732741 |
| 121410N | 732741 |
| 121460N | 734793 |
| 121580N | 730344 |
| 121600N | 730344 |
| 121600N | 819383 |
| 121610N | 819384 |
| 121620N | 732090 |
| 121650N | 819377 |
| 121690N | 819379 |
| 121720N | 732742 |
| 121730N | 732736 |
| 121740N | 732706 |
| 121890N | 732740 |
| 121950N | 734669 |
| 121990N | 732450 |
| 122520N | 732454 |
| 122540N | 730344 |
| 122600N | 734796 |
| 122670N | 732459 |
| 122730N | 734795 |
| 122740N | 734631 |
| 123280N | 734807 |
| 123290N | 734803 |
| 124820N | 731512 |
| 124820N | 731514 |
| 124820N | 732587 |
| 124860N | 732587 |
| 125110N | 734801 |
| 127000N | 817913 |
| 127001N | 818731 |
| 127003N | 818808 |
| 127004N | 818807 |
| 127005N | 818805 |
| 127006N | 818821 |
| 127008N | 818806 |
| 127010N | 817903 |
| 127050N | 817902 |
| 127080N | 817759 |
| 127100N | 817905 |
| 127100T | 817905 |
| 127150N | 817911 |
| 127160N | 817907 |
| 127170N | 817760 |

| DASIS | Valeo |
|---|---|
| 128053N | 696129 |
| 128053N | 696130 |
| 130140N | 734668 |
| 130500N | 730883 |
| 130500N | 731741 |
| 131900N | 734674 |
| 132040N | 732472 |
| 132110N | 732471 |
| 132130N | 732472 |
| 132160N | 730229 |
| 134700N | 732442 |
| 134920N | 734806 |
| 135270N | 734802 |
| 137004N | 818774 |
| 137014N | 817994 |
| 137015N | 818782 |
| 137016N | 818784 |
| 137020N | 818775 |
| 137020T | 818775 |
| 137070N | 817264 |
| 137100N | 817265 |
| 137100N | 818781 |
| 137120N | 816786 |
| 137120T | 816786 |
| 137150N | 816795 |
| 137170N | 816917 |
| 137190N | 818737 |
| 137320N | 816890 |
| 137350N | 818753 |
| 137360N | 818752 |
| 137370N | 817281 |
| 137420N | 818755 |
| 137440N | 817908 |
| 137450N | 816915 |
| 140000N | 734141 |
| 140001N | 734141 |
| 140002N | 731462 |
| 140026N | 732327 |
| 140026N | 732539 |
| 140030N | 731650 |
| 140033N | 730454 |
| 140035N | 734481 |
| 140036N | 734129 |
| 140042N | 734137 |
| 140046N | 734139 |
| 140046N | 734138 |
| 140048N | 732524 |
| 140049N | 734142 |
| 140050N | 731641 |
| 140054N | 734127 |
| 140057N | 732540 |
| 140060N | 730449 |
| 140061N | 735059 |
| 140073N | 735056 |
| 140078N | 735055 |
| 140100N | 731451 |
| 140110N | 731649 |
| 140130N | 732539 |
| 140140N | 730446 |
| 140160N | 732613 |
| 140180N | 734136 |
| 140190N | 731639 |
| 140210N | 731646 |
| 140360N | 731642 |
| 140380N | 731640 |
| 140380N | 731641 |
| 140430N | 734128 |
| 140480N | 731647 |
| 140490N | 730446 |
| 140670N | 732748 |
| 140700N | 731056 |
| 140720N | 731054 |
| 140770N | 732748 |
| 140820N | 730454 |
| 140950N | 731638 |
| 140990N | 819119 |
| 141070N | 732524 |
| 141100N | 732540 |

| DASIS | Valeo |
|---|---|
| 141110N | 734809 |
| 141180N | 734480 |
| 141190N | 732613 |
| 141220N | 732539 |
| 141240N | 732540 |
| 141250N | 731462 |
| 141310N | 732525 |
| 141340N | 734129 |
| 150000N | 731839 |
| 150003N | 732347 |
| 150006N | 734353 |
| 150011N | 732825 |
| 150013N | 732826 |
| 150015N | 732824 |
| 150019N | 734271 |
| 150022N | 732607 |
| 150023N | 732694 |
| 150025N | 732723 |
| 150029N | 731842 |
| 150031N | 731174 |
| 150035N | 730152 |
| 150042N | 734389 |
| 150053N | 734464 |
| 150056N | 734381 |
| 150058N | 734382 |
| 150063N | 734380 |
| 150064N | 734383 |
| 150065N | 734432 |
| 150068N | 735097 |
| 150072N | 734339 |
| 150080N | 730152 |
| 150110N | 732551 |
| 150160N | 883751 |
| 150190N | 883751 |
| 150210N | 734644 |
| 150230N | 883767 |
| 150240N | 883771 |
| 150290N | 731217 |
| 150310N | 883857 |
| 150320N | 883858 |
| 150330N | 883859 |
| 150340N | 819388 |
| 150360N | 883880 |
| 150370N | 883881 |
| 150450N | 732607 |
| 150460N | 819389 |
| 150570N | 730396 |
| 150600N | 730395 |
| 150610N | 731170 |
| 150620N | 883856 |
| 150630N | 730125 |
| 150670N | 734604 |
| 150680N | 732432 |
| 150680N | 734604 |
| 150690N | 883920 |
| 150700N | 735229 |
| 150710N | 732032 |
| 150720N | 731237 |
| 150760N | 731237 |
| 150790N | 732606 |
| 150800N | 731393 |
| 150810N | 731525 |
| 150820N | 731421 |
| 150830N | 731840 |
| 150880N | 731846 |
| 150890N | 732347 |
| 150890N | 731847 |
| 150950N | 883877 |
| 150990N | 730975 |
| 151030N | 734429 |
| 151130N | 731839 |
| 151190N | 731174 |
| 151190N | 731175 |
| 151240N | 731842 |
| 151250N | 731843 |
| 151280N | 883878 |
| 151320N | 731848 |
| 151320N | 732348 |

| DASIS | Valeo |
|---|---|
| 151450N | 730993 |
| 151460N | 730994 |
| 151460N | 731551 |
| 151500N | 731022 |
| 151550N | 732349 |
| 151560N | 883881 |
| 151570N | 731175 |
| 151600N | 731013 |
| 151610N | 731178 |
| 151620N | 731179 |
| 151640N | 732549 |
| 151670N | 732729 |
| 151710N | 883920 |
| 151720N | 730993 |
| 151790N | 732432 |
| 151800N | 731236 |
| 151810N | 734821 |
| 151860N | 732550 |
| 151860N | 732548 |
| 151870N | 732795 |
| 151880N | 731846 |
| 151890N | 732550 |
| 151910N | 731840 |
| 151920N | 734322 |
| 151960N | 732723 |
| 151980N | 732724 |
| 151990N | 734388 |
| 152007N | 732878 |
| 152012N | 732877 |
| 152013N | 732876 |
| 152014N | 732879 |
| 157000N | 818721 |
| 157000N | 817730 |
| 157001N | 818722 |
| 157002N | 818758 |
| 157003N | 818728 |
| 157004N | 817399 |
| 157009N | 817916 |
| 157010N | 817400 |
| 157011N | 818759 |
| 157013N | 817697 |
| 157014N | 818809 |
| 157015N | 817554 |
| 157017N | 817729 |
| 157020N | 817401 |
| 157025N | 817998 |
| 157030N | 817915 |
| 157050N | 817400 |
| 157050N | 817919 |
| 157070N | 817401 |
| 157080N | 817919 |
| 157100N | 817918 |
| 157110N | 817917 |
| 158007N | 696035 |
| 158160N | 696035 |
| 158170N | 696281 |
| 160000N | 734282 |
| 160001N | 730974 |
| 160003N | 731391 |
| 160004N | 731495 |
| 160005N | 731575 |
| 160006N | 731584 |
| 160009N | 731750 |
| 160011N | 732535 |
| 160012N | 732563 |
| 160012N | 731296 |
| 160013N | 732564 |
| 160014N | 732565 |
| 160015N | 732567 |
| 160018N | 732617 |
| 160021N | 732692 |
| 160022N | 732906 |
| 160025N | 731010 |
| 160031N | 734336 |
| 160032N | 732492 |
| 160040N | 731186 |
| 160043N | 810882 |
| 160044N | 730575 |

| DASIS | Valeo |
|---|---|
| 160047N | 810881 |
| 160048N | 730071 |
| 160051N | 730015 |
| 160053N | 732908 |
| 160059N | 734280 |
| 160060N | 730512 |
| 160061N | 730015 |
| 160063N | 732567 |
| 160064N | 732892 |
| 160065N | 732830 |
| 160066N | 730015 |
| 160068N | 730953 |
| 160069N | 730577 |
| 160070N | 810892 |
| 160071N | 730018 |
| 160072N | 732895 |
| 160073N | 732893 |
| 160074N | 734278 |
| 160075N | 734279 |
| 160080N | 810827 |
| 160082N | 731584 |
| 160086N | 732910 |
| 160087N | 732904 |
| 160092N | 735070 |
| 160093N | 735069 |
| 160094N | 735072 |
| 160102N | 734452 |
| 160105N | 734366 |
| 160108N | 734398 |
| 160113N | 732930 |
| 160114N | 732930 |
| 160180N | 730015 |
| 160180N | 730634 |
| 160230N | 731298 |
| 160240N | 731381 |
| 160260N | 731383 |
| 160280N | 731384 |
| 160290N | 731382 |
| 160350N | 731289 |
| 160360N | 731744 |
| 160370N | 731526 |
| 160480N | 731584 |
| 160490N | 731586 |
| 160490N | 731750 |
| 160590N | 730515 |
| 160620N | 730985 |
| 160700N | 732910 |
| 160710N | 810919 |
| 160750N | 730071 |
| 160760N | 810882 |
| 160830N | 730984 |
| 160930N | 730534 |
| 160940N | 816555 |
| 161060N | 810955 |
| 161070N | 730898 |
| 161170N | 816700 |
| 161180N | 730372 |
| 161190N | 730515 |
| 161190N | 730368 |
| 161190N | 730366 |
| 161200N | 730368 |
| 161210N | 730634 |
| 161220N | 810915 |
| 161230N | 730569 |
| 161240N | 816555 |
| 161260N | 730572 |
| 161270N | 730575 |
| 161270N | 730953 |
| 161300N | 730577 |
| 161310N | 730506 |
| 161320N | 730974 |
| 161320N | 730575 |
| 161360N | 730018 |
| 161450N | 732885 |
| 161470N | 732886 |
| 161810N | 731574 |
| 161820N | 732598 |
| 161830N | 732599 |

| DASIS | Valeo |
|---|---|
| 167000N | 817064 |
| 167002N | 817650 |
| 167003N | 817920 |
| 167004N | 816889 |
| 167005N | 818822 |
| 167006N | 817845 |
| 167007N | 817578 |
| 167008N | 818837 |
| 167009N | 818841 |
| 167010N | 816918 |
| 167011N | 818836 |
| 167012N | 818853 |
| 167013N | 818866 |
| 167014N | 818209 |
| 167016N | 817638 |
| 167017N | 818226 |
| 167018N | 818895 |
| 167019N | 817639 |
| 167030N | 816611 |
| 167050N | 816789 |
| 167060N | 816790 |
| 167070N | 816847 |
| 168034N | 698305 |
| 168035N | 698305 |
| 168130N | 698308 |
| 170040N | 810952 |
| 170180N | 734826 |
| 170200N | 734826 |
| 180000N | 732559 |
| 180001N | 732827 |
| 180003N | 732828 |
| 180005N | 732817 |
| 180009N | 732687 |
| 180010N | 883463 |
| 180011N | 732717 |
| 180012N | 732737 |
| 180017N | 734828 |
| 180018N | 817925 |
| 180020N | 883282 |
| 180021N | 732338 |
| 180022N | 883729 |
| 180024N | 730973 |
| 180035N | 732608 |
| 180038N | 810843 |
| 180043N | 730510 |
| 180044N | 734728 |
| 180048N | 732853 |
| 180053N | 732917 |
| 180054N | 732050 |
| 180054N | 732918 |
| 180054N | 732919 |
| 180058N | 732960 |
| 180080N | 883729 |
| 180080N | 883852 |
| 180080N | 883959 |
| 180100N | 810843 |
| 180120N | 810851 |
| 180130N | 883851 |
| 180150N | 730510 |
| 180170N | 810835 |
| 180200N | 731378 |
| 180210N | 730511 |
| 180230N | 731161 |
| 180240N | 731378 |
| 180270N | 731380 |
| 180290N | 731379 |
| 180310N | 730180 |
| 180330N | 730140 |
| 180330N | 731016 |
| 180340N | 810938 |
| 180350N | 810889 |
| 180390N | 730940 |
| 180430N | 730944 |
| 180450N | 730180 |
| 180500N | 810888 |
| 180510N | 883875 |
| 180530N | 730973 |
| 180560N | 731129 |

| DASIS | Valeo |
|---|---|
| 180570N | 810926 |
| 180580N | 731552 |
| 180590N | 810887 |
| 180610N | 730183 |
| 180620N | 730181 |
| 180630N | 730182 |
| 180640N | 730055 |
| 180670N | 816654 |
| 180720N | 730502 |
| 180730N | 731529 |
| 180740N | 816655 |
| 180750N | 816656 |
| 180760N | 816658 |
| 180770N | 730499 |
| 180780N | 810927 |
| 180790N | 816657 |
| 180800N | 810835 |
| 180810N | 731128 |
| 180820N | 810995 |
| 180840N | 816552 |
| 180850N | 819431 |
| 180850N | 730184 |
| 180860N | 883875 |
| 180880N | 810912 |
| 180970N | 730185 |
| 180980N | 819431 |
| 181001N | 732873 |
| 181003N | 732874 |
| 181010N | 730633 |
| 181040N | 730551 |
| 181050N | 730969 |
| 181110N | 730540 |
| 181120N | 730549 |
| 181150N | 730548 |
| 181230N | 810933 |
| 181240N | 730940 |
| 181250N | 731910 |
| 181260N | 731162 |
| 181270N | 731161 |
| 181320N | 732608 |
| 181330N | 732051 |
| 181350N | 731538 |
| 181390N | 732474 |
| 181390N | 732819 |
| 181410N | 731162 |
| 181410N | 731738 |
| 181420N | 732544 |
| 181430N | 734285 |
| 181440N | 732338 |
| 181470N | 731161 |
| 181510N | 734284 |
| 181530N | 732072 |
| 181560N | 732071 |
| 181610N | 732720 |
| 181630N | 732316 |
| 181640N | 732940 |
| 181660N | 732063 |
| 181670N | 732621 |
| 181690N | 732721 |
| 181700N | 732765 |
| 181720N | 732761 |
| 181740N | 732049 |
| 181750N | 732798 |
| 181770N | 732050 |
| 181800N | 732387 |
| 181810N | 732389 |
| 181820N | 732523 |
| 181830N | 732387 |
| 186100N | 816748 |
| 187000N | 817380 |
| 187002N | 817927 |
| 187003N | 817336 |
| 187004N | 817923 |
| 187006N | 818727 |
| 187007N | 817942 |
| 187008N | 817923 |
| 187009N | 817699 |
| 187010N | 817627 |

| DASIS | Valeo |
|---|---|
| 187011N | 818820 |
| 187012N | 817654 |
| 187013N | 817636 |
| 187014N | 817637 |
| 187015N | 817828 |
| 187016N | 818772 |
| 187017N | 818870 |
| 187018N | 818878 |
| 187021N | 818835 |
| 187022N | 818896 |
| 187070N | 816606 |
| 187080N | 816610 |
| 187100N | 816758 |
| 187140N | 816836 |
| 187150N | 816755 |
| 187170N | 817490 |
| 187180N | 817924 |
| 187200N | 817115 |
| 187200T | 817115 |
| 187950N | 816998 |
| 188003N | 698086 |
| 188005N | 698004 |
| 188007N | 698085 |
| 188010N | 698004 |
| 188015N | 698084 |
| 188018N | 698316 |
| 188019N | 698015 |
| 188020N | 698007 |
| 188032N | 698007 |
| 188036N | 698302 |
| 188040N | 698005 |
| 188050N | 698085 |
| 188210N | 696013 |
| 188260N | 698086 |
| 188290N | 698084 |
| 188390N | 698015 |
| 188430N | 698313 |
| 188470N | 698313 |
| 190000N | 810965 |
| 190001N | 810965 |
| 190005N | 732110 |
| 190006N | 732108 |
| 190120N | 810965 |
| 190190N | 732122 |
| 190230N | 732108 |
| 190230N | 732110 |
| 190240N | 732120 |
| 190250N | 732121 |
| 190260N | 732122 |
| 190270N | 732123 |
| 190300N | 734830 |
| 190310N | 734831 |
| 197000N | 817174 |
| 197003N | 817929 |
| 197004N | 817275 |
| 197005N | 818840 |
| 197006N | 818818 |
| 197006N | 818817 |
| 197010N | 810981 |
| 197020N | 817172 |
| 197030N | 816849 |
| 210000N | 732561 |
| 210023N | 731715 |
| 210024N | 731837 |
| 210025N | 734205 |
| 210029N | 734840 |
| 210031N | 734841 |
| 210032N | 732421 |
| 210034N | 732421 |
| 210036N | 734839 |
| 210037N | 735075 |
| 210040N | 731698 |
| 210043N | 734204 |
| 210044N | 734206 |
| 210049N | 734182 |
| 210050N | 731692 |
| 210053N | 731717 |
| 210064N | 734489 |

| DASIS | Valeo |
|---|---|
| 210070N | 730471 |
| 210070N | 731119 |
| 210074N | 734850 |
| 210081N | 731110 |
| 210086N | 735214 |
| 210089N | 734401 |
| 210090N | 731095 |
| 210098N | 734183 |
| 210100N | 731568 |
| 210103N | 734493 |
| 210114N | 734916 |
| 210120N | 731135 |
| 210122N | 734712 |
| 210130N | 819123 |
| 210140N | 730465 |
| 210160N | 730468 |
| 210170N | 732561 |
| 210230N | 731441 |
| 210350N | 730461 |
| 210360N | 730469 |
| 210370N | 731110 |
| 210370N | 731115 |
| 210390N | 730470 |
| 210420N | 731097 |
| 210430N | 731565 |
| 210430N | 731634 |
| 210440N | 731831 |
| 210460N | 731464 |
| 210490N | 731833 |
| 210510N | 731830 |
| 210560N | 731682 |
| 210660N | 731716 |
| 210680N | 731685 |
| 210680N | 731441 |
| 210690N | 731569 |
| 210720N | 731569 |
| 210790N | 730466 |
| 210840N | 730466 |
| 210880N | 731124 |
| 210900N | 731122 |
| 210930N | 731114 |
| 210940N | 731696 |
| 210960N | 731105 |
| 210980N | 731098 |
| 210990N | 731199 |
| 211010N | 730471 |
| 211050N | 731199 |
| 211130N | 731716 |
| 211140N | 731717 |
| 211230N | 732754 |
| 211230N | 732951 |
| 211260N | 731106 |
| 211270N | 731694 |
| 211320N | 730472 |
| 211510N | 731105 |
| 211580N | 734181 |
| 211590N | 731196 |
| 211610N | 732543 |
| 211630N | 731684 |
| 211640N | 731441 |
| 211680N | 731713 |
| 211690N | 732542 |
| 211700N | 732421 |
| 211960N | 732950 |
| 211970N | 734177 |
| 211980N | 732753 |
| 211990N | 732754 |
| 212028N | 734845 |
| 212029N | 734200 |
| 212029N | 734711 |
| 212031N | 734199 |
| 213200N | 732476 |
| 213250N | 731715 |
| 213330N | 731691 |
| 213470N | 734172 |
| 213560N | 734466 |
| 213750N | 732543 |
| 213840N | 732415 |

| DASIS | Valeo |
|---|---|
| 213870N | 732420 |
| 213880N | 732420 |
| 217001N | 817698 |
| 219071N | 734488 |
| 220007N | 810968 |
| 220070N | 810956 |
| 220180N | 810968 |
| 220180N | 810970 |
| 220750N | 810970 |
| 227000N | 818816 |
| 240030N | 734515 |
| 240040N | 734515 |
| 240050N | 731411 |
| 240050N | 732397 |
| 240060N | 731411 |
| 240070N | 731605 |
| 240080N | 731728 |
| 240090N | 731616 |
| 240400N | 732435 |
| 247010N | 817936 |
| 247020N | 817937 |
| 250020N | 730124 |
| 250020N | 731779 |
| 250110N | 819320 |
| 250160N | 730124 |
| 250220N | 731492 |
| 250230N | 734862 |
| 250270N | 731782 |
| 250280N | 731781 |
| 250360N | 732497 |
| 250570N | 730124 |
| 250570N | 819176 |
| 250580N | 734291 |
| 250590N | 734291 |
| 250600N | 734293 |
| 250610N | 734292 |
| 250630N | 734293 |
| 257001N | 817891 |
| 261910N | 818749 |
| 267000N | 818741 |
| 267014N | 818741 |
| 267019N | 818747 |
| 267020N | 817289 |
| 267020T | 817289 |
| 267050N | 818746 |
| 267050T | 818746 |
| 267100N | 818744 |
| 267100T | 818744 |
| 267160N | 817295 |
| 267160T | 817295 |
| 267170N | 818740 |
| 267170T | 818740 |
| 267280N | 818743 |
| 267280T | 818743 |
| 267300N | 818749 |
| 277005N | 817770 |
| 277010N | 816853 |
| 277010T | 816853 |
| 277030N | 817772 |
| 287000N | 816858 |
| 287000T | 816858 |
| 287004N | 817774 |
| 287006N | 817775 |
| 287007N | 818877 |
| 287008N | 818876 |
| 287009N | 818871 |
| 287011N | 818879 |
| 287012N | 818873 |
| 287013N | 818874 |
| 287014N | 818875 |
| 287070N | 817774 |
| 287100N | 817773 |
| 287100N | 817774 |
| 287100N | 817773 |
| 297060N | 816784 |
| 297070N | 816793 |
| 297200N | 817368 |
| 297200T | 817368 |

| DASIS | Valeo |
|---|---|
| 297210N | 817369 |
| 297210T | 817369 |
| 300000N | 732580 |
| 300002N | 732582 |
| 300004N | 732584 |
| 300005N | 734363 |
| 300006N | 734235 |
| 300007N | 732582 |
| 300009N | 734237 |
| 300011N | 731375 |
| 300014N | 734238 |
| 300015N | 734236 |
| 300070N | 731375 |
| 300100N | 816707 |
| 300300N | 883809 |
| 300340N | 811381 |
| 300350N | 811056 |
| 300430N | 731281 |
| 300460N | 731276 |
| 300470N | 731282 |
| 300490N | 731278 |
| 300540N | 730319 |
| 300550N | 730980 |
| 300550N | 731374 |
| 300560N | 731980 |
| 307000N | 817901 |
| 307001N | 817900 |
| 307002N | 817899 |
| 307040N | 817897 |
| 307060N | 817626 |
| 307080N | 817871 |
| 320000N | 734486 |
| 320003N | 734918 |
| 320005N | 734170 |
| 320010N | 730456 |
| 320012N | 734835 |
| 320019N | 735073 |
| 320030N | 730457 |
| 320090N | 731463 |
| 320300N | 731866 |
| 320320N | 731828 |
| 320380N | 732750 |
| 320420N | 732719 |
| 322004N | 732719 |
| 322005N | 734165 |
| 322006N | 734164 |
| 322007N | 734171 |
| 327001N | 817767 |
| 330001N | 730947 |
| 330002N | 883053 |
| 330005N | 732864 |
| 330010N | 883921 |
| 330013N | 732786 |
| 330020N | 883958 |
| 330050N | 731271 |
| 330090N | 730542 |
| 330130N | 731270 |
| 330160N | 731271 |
| 330160N | 883727 |
| 330160N | 730370 |
| 330220N | 731269 |
| 330250N | 883727 |
| 331990N | 883727 |
| 337001N | 817558 |
| 337010N | 817766 |
| 350000N | 731678 |
| 350009N | 734211 |
| 350012N | 730455 |
| 350030N | 734577 |
| 350070N | 731456 |
| 350070N | 730455 |
| 350080N | 731153 |
| 350160N | 731678 |
| 350180N | 734577 |
| 350190N | 731438 |
| 350200N | 731675 |
| 350230N | 734212 |
| 350250N | 734158 |

| DASIS | Valeo |
|---|---|
| 360000N | 731019 |
| 360001N | 731620 |
| 360003N | 731622 |
| 360004N | 731623 |
| 360006N | 731625 |
| 360008N | 731853 |
| 360009N | 731856 |
| 360010N | 731020 |
| 360011N | 731857 |
| 360014N | 731020 |
| 360060N | 731856 |
| 360070N | 730397 |
| 360170N | 731584 |
| 360230N | 731620 |
| 370001N | 731212 |
| 370004N | 731817 |
| 370038N | 734326 |
| 370039N | 734327 |
| 370270N | 732759 |
| 370330N | 731815 |
| 370340N | 731816 |
| 370460N | 731406 |
| 370620N | 731818 |
| 397005N | 816729 |
| 397009N | 816978 |
| 397010N | 816607 |
| 397014N | 817181 |
| 397030N | 816612 |
| 397031N | 816961 |
| 397050N | 816693 |
| 397170N | 816730 |
| 397180N | 816785 |
| 397190N | 816798 |
| 397200N | 816717 |
| 397220N | 816979 |
| 397230N | 816797 |
| 400028N | 734449 |
| 400029N | 734448 |
| 400320N | 816647 |
| 400440N | 816646 |
| 400530N | 811348 |
| 400580N | 730334 |
| 400580N | 816649 |
| 400660N | 731572 |
| 400830N | 734231 |
| 407000N | 818779 |
| 407001N | 818735 |
| 407002N | 818778 |
| 407004N | 818751 |
| 407005N | 818736 |
| 407007N | 818777 |
| 407008N | 818778 |
| 407020N | 816802 |
| 407070N | 816846 |
| 407070T | 816846 |
| 407110N | 816736 |
| 407120N | 816731 |
| 407130N | 816732 |
| 407140N | 816733 |
| 407180N | 817892 |
| 407190N | 817941 |
| 407230N | 816802 |
| 407240N | 818724 |
| 420012N | 816805 |
| 480006N | 733074 |
| 480007N | 731537 |
| 480008N | 883863 |
| 480011N | 731757 |
| 480013N | 819259 |
| 480014N | 734738 |
| 480015N | 819260 |
| 480019N | 731606 |
| 480022N | 817631 |
| 480023N | 731537 |
| 480028N | 732867 |
| 480029N | 732839 |
| 480035N | 732963 |
| 480036N | 734269 |

| DASIS | Valeo |
|---|---|
| 480037N | 732785 |
| 480039N | 734268 |
| 480040N | 734270 |
| 480042N | 734419 |
| 480043N | 734269 |
| 480140N | 734752 |
| 480150N | 734753 |
| 480180N | 731760 |
| 480180N | 883863 |
| 480260N | 734859 |
| 480360N | 731757 |
| 480370N | 731755 |
| 480380N | 734695 |
| 480390N | 732361 |
| 480390N | 732839 |
| 480490N | 819259 |
| 480550N | 819260 |
| 480570N | 883863 |
| 480590N | 731505 |
| 480640N | 730349 |
| 480640N | 730972 |
| 480920N | 731537 |
| 480950N | 731756 |
| 480970N | 731606 |
| 480970N | 732175 |
| 480970N | 732427 |
| 481050N | 732440 |
| 481060N | 730349 |
| 481100N | 730360 |
| 481100N | 730361 |
| 481140N | 730362 |
| 481150N | 730362 |
| 481160N | 730363 |
| 481170N | 730363 |
| 481380N | 731422 |
| 481390N | 731428 |
| 481400N | 731429 |
| 481410N | 731430 |
| 481420N | 731503 |
| 481600N | 731501 |
| 482006N | 734755 |
| 482007N | 734754 |
| 486040N | 817761 |
| 487000N | 818757 |
| 487001N | 818720 |
| 487002N | 817872 |
| 487003N | 817625 |
| 487006N | 817864 |
| 487009N | 818894 |
| 487016N | 817438 |
| 487017N | 817487 |
| 487018N | 818215 |
| 487021N | 818819 |
| 487022N | 818825 |
| 487040N | 817625 |
| 487040T | 817625 |
| 487050N | 817205 |
| 487060N | 817865 |
| 487060T | 817865 |
| 487080N | 818827 |
| 487090N | 818827 |
| 487170N | 817653 |
| 487200N | 817488 |
| 487210N | 817531 |
| 487220N | 817870 |
| 487230N | 817867 |
| 487250N | 817870 |
| 488010N | 696049 |
| 488030N | 696037 |
| 488090N | 698155 |
| 490004N | 732864 |
| 490020N | 730375 |
| 490180N | 730317 |
| 491120N | 732863 |
| 491130N | 732864 |
| 497000N | 817501 |
| 510025N | 734903 |
| 510032N | 734965 |

| | Valeo |
|---|---|
| **DASIS** | |
| 510038N | **734908** |
| 510050N | **734596** |
| 520190N | **731578** |
| 520250N | **732552** |
| 520260N | **731148** |
| 520280N | **731531** |
| 520500N | **731579** |
| 520660N | **731723** |
| 520760N | **732704** |
| 560005N | **734408** |
| 560006N | **734254** |
| 560007N | **734408** |
| 560013N | **732487** |
| 560014N | **734266** |
| 560015N | **734253** |
| 560019N | **734259** |
| 560023N | **734784** |
| 560024N | **734949** |
| 560040N | **734256** |
| 560060N | **734267** |
| 560080N | **731454** |
| 560110N | **734256** |
| 560150N | **732487** |
| 560200N | **734587** |
| 560220N | **734950** |
| 560230N | **734258** |
| 560340N | **732488** |
| 560350N | **734255** |
| 870087N | **696172** |
| 870160N | **696056** |
| 870580N | **696062** |
| 870590N | **696063** |
| **DELPHI** | |
| 52405090 | **730395** |
| 52405090 | **730396** |
| 52405090 | **731175** |
| 52405091 | **730994** |
| 52405092 | **734271** |
| 52405094 | **732032** |
| 52405095 | **730993** |
| 52405095 | **734429** |
| 52405096 | **730993** |
| 52405109 | **732347** |
| 52405110 | **731847** |
| 52405111 | **731848** |
| 52405111 | **732348** |
| 52405119 | **730395** |
| 52405121 | **730994** |
| 52405122 | **731175** |
| 52405123 | **730993** |
| 52405124 | **731174** |
| 52405125 | **734604** |
| 52484500 | **734248** |
| 52488849 | **731013** |
| 52488881 | **730309** |
| 52488881 | **730520** |
| 52488901 | **734250** |
| 52497028 | **731606** |
| 52497028 | **732175** |
| 52497069 | **731735** |
| 52497071 | **731734** |
| BG2448 | **816756** |
| PLE100014 | **730040** |
| PLE100015 | **883765** |
| PLE100020 | **730857** |
| PLE100023 | **883880** |
| PLE100024 | **730975** |
| PLE100162 | **811380** |
| PLE100201 | **730317** |
| PLE100226 | **816655** |
| PLE100227 | **816657** |
| PLE100231 | **730055** |
| PLE100232 | **730551** |
| PLE100233 | **816658** |
| PLE100242 | **730520** |
| PLE100246 | **731525** |
| PLE100247 | **731393** |

| | Valeo |
|---|---|
| **DELPHI** | |
| PLE100249 | **730976** |
| PLE100250 | **731375** |
| PLE100251 | **732705** |
| PLE100252 | **730980** |
| PLE100252 | **731374** |
| TSP0225011 | **816967** |
| TSP0225018 | **817248** |
| TSP0225021 | **817230** |
| TSP0225023 | **816803** |
| TSP0225026 | **816992** |
| TSP0225030 | **816948** |
| TSP0225031 | **818179** |
| TSP0225046 | **816902** |
| TSP0225050 | **816960** |
| TSP0225055 | **816835** |
| TSP0225058 | **816866** |
| TSP0225061 | **816867** |
| TSP0225063 | **817061** |
| TSP0225064 | **816756** |
| TSP0225065 | **816912** |
| TSP0225067 | **817507** |
| TSP0225072 | **816910** |
| TSP0225078 | **817675** |
| TSP0225099 | **816898** |
| TSP0225100 | **816908** |
| TSP0225102 | **817411** |
| TSP0225103 | **817412** |
| TSP0225104 | **817799** |
| TSP0225105 | **817670** |
| TSP0225107 | **816960** |
| TSP0225108 | **817527** |
| TSP0225109/1 | **818009** |
| TSP0225110 | **816852** |
| TSP0225111 | **817225** |
| TSP0225112 | **817232** |
| TSP0225113 | **817244** |
| TSP0225117 | **816984** |
| TSP0225117 | **817042** |
| TSP0225118 | **817383** |
| TSP0225119 | **816964** |
| TSP0225120 | **816850** |
| TSP0225124 | **816949** |
| TSP0225125 | **816891** |
| TSP0225126 | **817011** |
| TSP0225131 | **817171** |
| TSP0225135 | **816945** |
| TSP0225140 | **817197** |
| TSP0225141 | **816921** |
| TSP0225141M | **817670** |
| TSP0225143 | **817559** |
| TSP0225151 | **818099** |
| TSP0225152 | **816948** |
| TSP0225153 | **817073** |
| TSP0225155 | **816922** |
| TSP0225173 | **816977** |
| TSP0225176 | **817230** |
| TSP0225180 | **817427** |
| TSP0225184 | **817666** |
| TSP0225187 | **817406** |
| TSP0225193 | **816900** |
| TSP0225194 | **817252** |
| TSP0225196 | **818047** |
| TSP0225196 | **817505** |
| TSP0225198 | **816960** |
| TSP0225199 | **817283** |
| TSP0225200 | **816839** |
| TSP0225204 | **817560** |
| TSP0225207 | **818024** |
| TSP0225210 | **817504** |
| TSP0225212 | **818008** |
| TSP0225213 | **816987** |
| TSP0225217 | **817229** |
| TSP0225218 | **817493** |
| TSP0225221 | **817506** |
| TSP0225222 | **817067** |
| TSP0225229 | **817848** |
| TSP0225230 | **817463** |
| TSP0225236 | **817405** |

| | Valeo |
|---|---|
| **DELPHI** | |
| TSP0225238 | **817607** |
| TSP0225239 | **816981** |
| TSP0225240 | **816991** |
| TSP0225243 | **817023** |
| TSP0225247 | **817015** |
| TSP0225249 | **817288** |
| TSP0225250 | **817667** |
| TSP0225259 | **818019** |
| TSP0225261 | **818191** |
| TSP0225262 | **817384** |
| TSP0225263 | **816985** |
| TSP0225264 | **818007** |
| TSP0225268 | **817684** |
| TSP0225269 | **817385** |
| TSP0225271 | **817685** |
| TSP0225275 | **817232** |
| TSP0225292 | **818036** |
| TSP0225307 | **817386** |
| TSP0225327 | **817563** |
| TSP0225328 | **817492** |
| TSP0225329 | **817848** |
| TSP0225330 | **817235** |
| TSP0225331 | **816986** |
| TSP0225350 | **817253** |
| TSP0225354 | **816924** |
| TSP0225357 | **817375** |
| TSP0225359 | **816863** |
| TSP0225360 | **817428** |
| TSP0225361 | **818030** |
| TSP0225363 | **816865** |
| TSP0225366 | **818031** |
| TSP0225369 | **816885** |
| TSP0225372 | **817247** |
| TSP0225373 | **817246** |
| TSP0225390 | **817674** |
| TSP0225391 | **816910** |
| TSP0225405 | **817818** |
| TSP0225406 | **817569** |
| TSP0225407 | **817570** |
| TSP0225410 | **817561** |
| TSP0225411 | **817508** |
| TSP0225412 | **817655** |
| TSP0225416 | **818006** |
| TSP0225419 | **817567** |
| TSP0225432 | **817562** |
| TSP0225434 | **817458** |
| TSP0225436 | **817603** |
| TSP0225443 | **818025** |
| TSP0225446 | **817245** |
| TSP0225453 | **817679** |
| TSP0225455 | **817665** |
| TSP0225456 | **817840** |
| TSP0225458 | **817669** |
| TSP0225459 | **817664** |
| TSP0225460 | **817493** |
| TSP0225461 | **818004** |
| TSP0225463 | **817647** |
| TSP0225464 | **817648** |
| TSP0225465 | **817568** |
| TSP0225466 | **817509** |
| TSP0225471 | **816996** |
| TSP0225473 | **817657** |
| TSP0225477 | **817609** |
| TSP0225478 | **818047** |
| TSP0225481 | **817663** |
| TSP0225482 | **817777** |
| TSP0225483 | **817659** |
| TSP0225484 | **817809** |
| TSP0225485 | **817575** |
| TSP0225486 | **817445** |
| TSP0225491 | **818050** |
| TSP0225494 | **817837** |
| TSP0225495 | **817843** |
| TSP0225498 | **817844** |
| TSP0225499 | **817464** |
| TSP0225500 | **818017** |
| TSP0225501 | **818021** |
| TSP0225503 | **818003** |

| | Valeo |
|---|---|
| **DELPHI** | |
| TSP0225504 | **817610** |
| TSP0225505 | **817741** |
| TSP0225507 | **817477** |
| TSP0225508 | **817686** |
| TSP0225509 | **817446** |
| TSP0225510 | **817701** |
| TSP0225511 | **817741** |
| TSP0225514 | **818018** |
| TSP0225519 | **818020** |
| TSP0225520 | **818046** |
| TSP0225524 | **818023** |
| TSP0225529 | **818003** |
| TSP0225530 | **817547** |
| TSP0225531 | **818093** |
| TSP0225532 | **817839** |
| TSP0225533 | **817847** |
| TSP0225534 | **817689** |
| TSP0225535 | **817065** |
| TSP0225536 | **817524** |
| TSP0225537 | **817526** |
| TSP0225538 | **818029** |
| TSP0225539 | **817731** |
| TSP0225540 | **817601** |
| TSP0225541 | **817608** |
| TSP0225543 | **817806** |
| TSP0225544 | **818187** |
| TSP0225545 | **814011** |
| TSP0225547 | **817383** |
| TSP0225548 | **818170** |
| TSP0225551 | **818192** |
| TSP0225552 | **818193** |
| TSP0225554 | **818005** |
| TSP0225565 | **817577** |
| TSP0225568 | **817602** |
| TSP0225569 | **817645** |
| TSP0225576 | **814086** |
| TSP0226109M | **818004** |
| TSP0226111M | **817464** |
| TSP0226112M | **817849** |
| TSP0226116M | **817663** |
| TSP0226117M | **817657** |
| TSP0226178M | **818020** |
| TSP0226179M | **817842** |
| TSP0226180M | **817602** |
| TSP0226181M | **817645** |
| TSP0226183M | **817582** |
| TSP0226187M | **818118** |
| TSP0226187M | **817610** |
| TSP0226190M | **817686** |
| TSP0226191M | **817777** |
| TSP0226192M | **817806** |
| TSP0226196M | **818000** |
| TSP0226196M | **818001** |
| TSP0226198M | **817839** |
| TSP0226199M | **817847** |
| TSP0226200M | **818050** |
| TSP0226203M | **817577** |
| TSP0226204M | **817661** |
| TSP0226205M | **817687** |
| TSP0226207M | **818114** |
| TSP0226210M | **818046** |
| TSP0525503 | **812326** |
| TSP0525506 | **812154** |
| TSP0525507 | **812149** |
| TSP0525510 | **812285** |
| TSP0525511 | **812284** |
| TSP0525512 | **812146** |
| TSP0525515 | **812303** |
| TSP0525516 | **883965** |
| TSP0525521 | **812278** |
| **DENSO** | |
| BA810 | **732437** |
| BA811 | **731537** |
| BA812 | **731910** |
| BM010 | **734363** |
| BM011 | **734362** |
| BM015 | **734448** |

| | Valeo |
|---|---|
| **DENSO** | |
| BM016 | **734449** |
| BM101 | **816707** |
| BM102 | **730519** |
| BM103 | **730309** |
| BM103 | **730520** |
| BM105 | **811070** |
| BM106 | **811071** |
| BM108 | **811073** |
| BM113 | **730976** |
| BM114 | **731562** |
| BM114 | **732705** |
| BM115 | **731975** |
| BM118 | **731976** |
| BM120 | **731375** |
| BM120 | **731562** |
| BM122 | **731977** |
| BM123 | **731978** |
| BM125 | **883811** |
| BM125 | **883813** |
| BM127 | **811385** |
| BM128 | **811386** |
| BM129 | **883812** |
| BM130 | **883827** |
| BM131 | **883813** |
| BM134 | **883799** |
| BM136 | **883428** |
| BM137 | **883053** |
| BM138 | **811387** |
| BM138 | **883825** |
| BM141 | **732688** |
| BM142 | **731981** |
| BM143 | **731972** |
| BM144 | **731973** |
| BM145 | **731979** |
| BM148 | **731980** |
| BM149 | **731303** |
| BM150 | **731302** |
| BM151 | **734239** |
| BM153 | **731974** |
| BM157 | **731374** |
| BM157 | **734219** |
| BM158 | **734220** |
| BM159 | **734235** |
| BM160 | **734236** |
| BM161 | **734221** |
| BM162 | **732557** |
| BM163 | **732557** |
| BM164 | **732557** |
| BM165 | **734220** |
| BM166 | **732578** |
| BM167 | **734224** |
| BM168 | **732913** |
| BM170 | **734231** |
| BM172 | **732913** |
| BM173 | **734225** |
| BM174 | **732913** |
| BM175 | **734768** |
| BM176 | **734237** |
| BM177 | **734238** |
| BM178 | **735171** |
| BM179 | **735171** |
| BM180 | **735172** |
| BM182 | **734231** |
| BM188 | **734228** |
| BM189 | **734228** |
| BM190 | **734229** |
| BM192 | **734692** |
| BM193 | **734733** |
| BM195 | **734459** |
| BM196 | **734457** |
| BM197 | **734458** |
| BM198 | **734361** |
| BM199 | **734361** |
| BM201 | **883819** |
| BM202 | **883820** |
| BM203 | **883727** |
| BM212 | **730504** |
| BM214 | **730503** |

| | Valeo |
|---|---|
| **DENSO** | |
| BM215 | **883818** |
| BM216 | **730595** |
| BM218 | **732198** |
| BM221 | **810954** |
| BM222 | **730491** |
| BM224 | **811381** |
| BM225 | **730991** |
| BM227 | **730183** |
| BM232 | **730946** |
| BM233 | **730947** |
| BM234 | **730946** |
| BM234 | **730948** |
| BM235 | **730945** |
| BM235 | **731266** |
| BM236 | **730946** |
| BM250 | **732885** |
| BM251 | **810912** |
| BM252 | **730184** |
| BM253 | **730502** |
| BM254 | **731128** |
| BM255 | **730181** |
| BM256 | **811073** |
| BM257 | **810949** |
| BM258 | **732812** |
| BM260 | **732007** |
| BM261 | **731378** |
| BM262 | **731378** |
| BM263 | **731379** |
| BM264 | **732316** |
| BM265 | **732051** |
| BM266 | **816647** |
| BM267 | **734250** |
| BM268 | **734248** |
| BM270 | **730485** |
| BM272 | **883849** |
| BM273 | **730520** |
| BM309 | **883715** |
| BM310 | **730897** |
| BM311 | **816716** |
| BM312 | **730507** |
| BM312 | **734454** |
| BM313 | **730982** |
| BM314 | **883954** |
| BM315 | **883956** |
| BM317 | **730483** |
| BM318 | **730484** |
| BM319 | **811046** |
| BM320 | **730114** |
| BM321 | **730857** |
| BM323 | **883767** |
| BM324 | **883771** |
| BM325 | **883858** |
| BM328 | **730372** |
| BM329 | **730366** |
| BM329 | **730515** |
| BM332 | **730018** |
| BM333 | **810827** |
| BM334 | **810892** |
| BM335 | **730898** |
| BM336 | **730015** |
| BM337 | **730634** |
| BM338 | **730634** |
| BM339 | **816700** |
| BM340 | **810915** |
| BM341 | **810955** |
| BM342 | **810919** |
| BM344 | **883463** |
| BM345 | **883282** |
| BM346 | **810933** |
| BM348 | **883959** |
| BM349 | **810851** |
| BM350 | **810926** |
| BM353 | **816656** |
| BM353 | **816657** |
| BM356 | **730180** |
| BM357 | **730140** |
| BM358 | **883851** |
| BM359 | **810889** |

| IAM | Valeo |
|---|---|
| **DENSO** | |
| BM360 | **730940** |
| BM361 | **730944** |
| BM364 | **883958** |
| BM378 | **734285** |
| BM379 | **734284** |
| BM380 | **734284** |
| BM401 | **730349** |
| BM404 | **819259** |
| BM406 | **819260** |
| BM409 | **730172** |
| BM410 | **730172** |
| BM411 | **730119** |
| BM412 | **730119** |
| BM413 | **732758** |
| BM414 | **730565** |
| BM415 | **732759** |
| BM415 | **730565** |
| BM416 | **883799** |
| BM421 | **734615** |
| BM423 | **732099** |
| BM424 | **819418** |
| BM433 | **731514** |
| BM434 | **732593** |
| BM435 | **734421** |
| BM448 | **810811** |
| BM451 | **883428** |
| BM453 | **730040** |
| BM454 | **730040** |
| BM456 | **811380** |
| BM457 | **730631** |
| BM458 | **811047** |
| BM459 | **730631** |
| BM460 | **730116** |
| BM463 | **730117** |
| BM464 | **730117** |
| BM469 | **730483** |
| BM472 | **819320** |
| BM473 | **819320** |
| BM476 | **730124** |
| BM476 | **819176** |
| BM477 | **811046** |
| BM478 | **811046** |
| BM479 | **811046** |
| BM484 | **883954** |
| BM486 | **730842** |
| BM487 | **883956** |
| BM492 | **730484** |
| BM493 | **730857** |
| BM494 | **730856** |
| BM495 | **731300** |
| BM496 | **730123** |
| BM497 | **730590** |
| BM499 | **730483** |
| BM510 | **731550** |
| BM511 | **731299** |
| BM512 | **731492** |
| BM513 | **730124** |
| BM513 | **819176** |
| BM515 | **730124** |
| BM518 | **731073** |
| BM523 | **730883** |
| BM528 | **819379** |
| BM529 | **883860** |
| BM530 | **819376** |
| BM533 | **730344** |
| BM534 | **819368** |
| BM535 | **819368** |
| BM537 | **819201** |
| BM539 | **883876** |
| BM541 | **819377** |
| BM542 | **730344** |
| BM543 | **730344** |
| BM546 | **819383** |
| BM547 | **730344** |
| BM570 | **883858** |
| BM581 | **883751** |
| BM582 | **883856** |
| BM583 | **731217** |

| IAM | Valeo |
|---|---|
| **DENSO** | |
| BM584 | **730994** |
| BM585 | **730993** |
| BM587 | **730125** |
| BM588 | **731179** |
| BM589 | **883857** |
| BM590 | **731175** |
| BM592 | **731174** |
| BM595 | **810827** |
| BM597 | **730534** |
| BM604 | **730018** |
| BM607 | **810892** |
| BM608 | **810933** |
| BM609 | **810933** |
| BM610 | **883463** |
| BM611 | **883463** |
| BM613 | **883959** |
| BM615 | **810927** |
| BM616 | **816552** |
| BM617 | **816658** |
| BM618 | **816656** |
| BM619 | **816655** |
| BM620 | **816654** |
| BM621 | **730055** |
| BM622 | **883875** |
| BM624 | **730140** |
| BM626 | **730140** |
| BM627 | **810965** |
| BM628 | **810965** |
| BM631 | **732108** |
| BM636 | **883958** |
| BM637 | **883921** |
| BM638 | **730542** |
| BM643 | **730455** |
| BM645 | **883720** |
| BM646 | **883869** |
| BM647 | **883870** |
| BM650 | **816703** |
| BM682 | **730396** |
| BM683 | **730395** |
| BM684 | **883880** |
| BM686 | **731779** |
| BM687 | **730360** |
| BM688 | **730361** |
| BM689 | **730363** |
| BM690 | **819373** |
| BM693 | **731807** |
| BM703 | **732540** |
| BM704 | **819193** |
| BM705 | **730423** |
| BM705 | **730424** |
| BM706 | **731611** |
| BM707 | **731611** |
| BM707 | **730997** |
| BM708 | **730999** |
| BM718 | **730633** |
| BM720 | **730578** |
| BM724 | **819151** |
| BM725 | **732003** |
| BM727 | **883859** |
| BM729 | **734429** |
| BM737 | **731380** |
| BM738 | **731538** |
| BM742 | **731805** |
| BM747 | **732605** |
| BM748 | **731735** |
| BM753 | **731022** |
| BM754 | **731170** |
| BM759 | **731215** |
| BM760 | **731243** |
| BM761 | **731215** |
| BM762 | **732759** |
| BM763 | **732591** |
| BM766 | **731807** |
| BM773 | **819412** |
| BM773 | **819413** |
| BM775 | **731013** |
| BM776 | **732606** |
| BM777 | **731992** |

| IAM | Valeo |
|---|---|
| **DENSO** | |
| BM778 | **730956** |
| BM779 | **731268** |
| BM781 | **731552** |
| BM782 | **731782** |
| BM784 | **730559** |
| BM784 | **731617** |
| BM785 | **819422** |
| BM787 | **811069** |
| BM789 | **732365** |
| BM791 | **732108** |
| BM792 | **732347** |
| BM793 | **731127** |
| BM797 | **732910** |
| BM798 | **734772** |
| BM802 | **731818** |
| BM803 | **731606** |
| BM804 | **731607** |
| BM805 | **732529** |
| BM806 | **732528** |
| BM807 | **731265** |
| BM808 | **731005** |
| BM809 | **731032** |
| BM813 | **732474** |
| BM814 | **732792** |
| BM815 | **732789** |
| BM816 | **732698** |
| BM853 | **734332** |
| BMX004 | **732011** |
| BMX005 | **732012** |
| BMX006 | **732013** |
| BMX007 | **732248** |
| BMX008 | **732505** |
| BMX009 | **731278** |
| BMX010 | **731422** |
| BMX011 | **731505** |
| BMX012 | **731429** |
| BMX013 | **731531** |
| BMX014 | **731295** |
| BMX015 | **731296** |
| BMX016 | **732564** |
| BMX017 | **732563** |
| BMX018 | **731570** |
| BMX019 | **732577** |
| BMX020 | **731744** |
| BMX021 | **731743** |
| BMX023 | **732517** |
| BMX023 | **731743** |
| BMX025 | **731165** |
| BMX026 | **731166** |
| BMX027 | **731166** |
| BMX028 | **731168** |
| BMX029 | **730957** |
| BMX030 | **731298** |
| BMX031 | **730959** |
| BMX032 | **730958** |
| BMX033 | **730960** |
| BMX035 | **730934** |
| BMX036 | **819428** |
| BMX037 | **731584** |
| BMX038 | **731009** |
| BMX041 | **731177** |
| BMX042 | **734455** |
| BMX043 | **732617** |
| BMX044 | **731297** |
| BMX046 | **732534** |
| BMX047 | **732535** |
| BMX048 | **732520** |
| BMX050 | **732520** |
| BMX051 | **732535** |
| BMX054 | **732890** |
| BMX055 | **732893** |
| BMX056 | **732892** |
| BMX057 | **732887** |
| BMX058 | **732909** |
| BMX059 | **732909** |
| BMX060 | **816716** |
| BMX062 | **731391** |
| BMX064 | **730983** |

| IAM | Valeo |
|---|---|
| **DENSO** | |
| BMX066 | **731010** |
| BMX067 | **730507** |
| BMX068 | **731181** |
| BMX069 | **730985** |
| BMX070 | **731180** |
| BMX071 | **731180** |
| BMX072 | **731176** |
| BMX073 | **731176** |
| BMX074 | **883866** |
| BMX075 | **961149** |
| BMX076 | **816706** |
| BMX077 | **730491** |
| BMX079 | **730498** |
| BMX080 | **730632** |
| DCN01011 | **817527** |
| DCN02005 | **817569** |
| DCN02006 | **817741** |
| DCN07005 | **817464** |
| DCN07007 | **814095** |
| DCN07008 | **818171** |
| DCN07009 | **817508** |
| DCN07010 | **817042** |
| DCN07019 | **817524** |
| DCN07019 | **818170** |
| DCN07050 | **814069** |
| DCN09010 | **818009** |
| DCN09015 | **818019** |
| DCN09050 | **818191** |
| DCN09051 | **818018** |
| DCN09070 | **818021** |
| DCN09071 | **818020** |
| DCN09082 | **818007** |
| DCN09092 | **817411** |
| DCN09100 | **817684** |
| DCN09102 | **818017** |
| DCN09103 | **817685** |
| DCN09105 | **818005** |
| DCN09130 | **812329** |
| DCN10005 | **816992** |
| DCN10006 | **817493** |
| DCN10007 | **818046** |
| DCN10008 | **817664** |
| DCN12001 | **818036** |
| DCN12002 | **818037** |
| DCN13012 | **817412** |
| DCN17002 | **817659** |
| DCN17015 | **817849** |
| DCN17055 | **816891** |
| DCN20005 | **817505** |
| DCN20006 | **817506** |
| DCN21006 | **817283** |
| DCN21010 | **817230** |
| DCN21011 | **817229** |
| DCN21015 | **817526** |
| DCN21025 | **817824** |
| DCN23001 | **818030** |
| DCN23002 | **818029** |
| DCN23003 | **816912** |
| DCN23004 | **817799** |
| DCN23007 | **817602** |
| DCN23008 | **817428** |
| DCN23010 | **817197** |
| DCN23011 | **817701** |
| DCN23012 | **817608** |
| DCN23013 | **817509** |
| DCN23015 | **817568** |
| DCN23025 | **817379** |
| DCN32001 | **817777** |
| DCN32016 | **816967** |
| DCN32017 | **817244** |
| DCN32018 | **817679** |
| DCN32030 | **817806** |
| DER01006 | **696109** |
| DER01007 | **696108** |
| DER01012 | **696111** |
| DER02005 | **696055** |
| DER02005 | **698155** |
| DER07005 | **696132** |

| IAM | Valeo |
|---|---|
| **DENSO** | |
| DER07005 | **696139** |
| DER09001 | **696098** |
| DER09005 | **696099** |
| DER09008 | **696098** |
| DER09014 | **698483** |
| DER09015 | **698484** |
| DER09016 | **698562** |
| DER09017 | **698786** |
| DER09018 | **698788** |
| DER09032 | **696106** |
| DER09033 | **696197** |
| DER09035 | **696197** |
| DER09037 | **696102** |
| DER09039 | **696104** |
| DER09040 | **696106** |
| DER09079 | **698179** |
| DER09086 | **696095** |
| DER09245 | **698178** |
| DER10001 | **696276** |
| DER10002 | **696276** |
| DER10002 | **696278** |
| DER13006 | **698178** |
| DER21002 | **698375** |
| DER21005 | **696073** |
| DER21006 | **696074** |
| DER21007 | **696069** |
| DER21008 | **696070** |
| DER21010 | **696071** |
| DIT02001 | **817625** |
| DIT02003 | **817867** |
| DIT02004 | **817870** |
| DIT02005 | **817869** |
| DIT02021 | **818825** |
| DIT09101 | **817882** |
| DIT09102 | **817882** |
| DIT09106 | **818823** |
| DIT09107 | **818824** |
| DIT09120 | **817879** |
| DRM01001 | **734733** |
| DRM01003 | **731591** |
| DRM01003 | **810949** |
| DRM02002 | **730360** |
| DRM02005 | **730361** |
| DRM02006 | **730363** |
| DRM02007 | **731606** |
| DRM02007 | **732175** |
| DRM02010 | **730349** |
| DRM02012 | **819259** |
| DRM02013 | **819260** |
| DRM02020 | **731537** |
| DRM02030 | **731755** |
| DRM02031 | **731757** |
| DRM02032 | **731757** |
| DRM02033 | **732963** |
| DRM04001 | **883799** |
| DRM05029 | **819395** |
| DRM05032 | **819397** |
| DRM05037 | **732198** |
| DRM05038 | **731511** |
| DRM05038 | **731512** |
| DRM05040 | **731514** |
| DRM05041 | **819422** |
| DRM05042 | **730365** |
| DRM05043 | **731725** |
| DRM05043 | **734301** |
| DRM05052 | **734615** |
| DRM05054 | **732099** |
| DRM05055 | **819418** |
| DRM05056 | **732593** |
| DRM05057 | **734421** |
| DRM05059 | **819415** |
| DRM05061 | **734615** |
| DRM05062 | **732099** |
| DRM05066 | **731523** |
| DRM05067 | **731766** |
| DRM05069 | **734276** |
| DRM05072 | **734614** |
| DRM07002 | **731173** |

| IAM | Valeo |
|---|---|
| **DENSO** | |
| DRM07010 | **732831** |
| DRM07010 | **732930** |
| DRM07011 | **732831** |
| DRM08001 | **734248** |
| DRM08003 | **734250** |
| DRM09010 | **731979** |
| DRM09020 | **731302** |
| DRM09021 | **731974** |
| DRM09021 | **732557** |
| DRM09021 | **734220** |
| DRM09022 | **731972** |
| DRM09023 | **734220** |
| DRM09024 | **731303** |
| DRM09025 | **732688** |
| DRM09026 | **731973** |
| DRM09027 | **731981** |
| DRM09028 | **734239** |
| DRM09029 | **732557** |
| DRM09031 | **732557** |
| DRM09032 | **734768** |
| DRM09035 | **734220** |
| DRM09041 | **730520** |
| DRM09042 | **732789** |
| DRM09060 | **734692** |
| DRM09061 | **735171** |
| DRM09062 | **735171** |
| DRM09064 | **735172** |
| DRM09073 | **811380** |
| DRM09074 | **731611** |
| DRM09075 | **730999** |
| DRM09076 | **731611** |
| DRM09077 | **730995** |
| DRM09080 | **816707** |
| DRM09081 | **883053** |
| DRM09083 | **732792** |
| DRM09090 | **731975** |
| DRM09091 | **731977** |
| DRM09092 | **731976** |
| DRM09093 | **731978** |
| DRM09094 | **734219** |
| DRM09095 | **730976** |
| DRM09096 | **731562** |
| DRM09096 | **732705** |
| DRM09097 | **734221** |
| DRM09098 | **732913** |
| DRM09099 | **734224** |
| DRM09100 | **734225** |
| DRM09101 | **732913** |
| DRM09102 | **734459** |
| DRM09103 | **732913** |
| DRM09104 | **734361** |
| DRM09105 | **734457** |
| DRM09106 | **734362** |
| DRM09106 | **734458** |
| DRM09108 | **734458** |
| DRM09111 | **735041** |
| DRM09120 | **734228** |
| DRM09121 | **734228** |
| DRM09122 | **734229** |
| DRM09131 | **811071** |
| DRM09133 | **811070** |
| DRM09140 | **883811** |
| DRM09141 | **811385** |
| DRM09142 | **883812** |
| DRM09143 | **883813** |
| DRM09150 | **731972** |
| DRM09150 | **731981** |
| DRM09150 | **732557** |
| DRM10013 | **811047** |
| DRM10014 | **811047** |
| DRM10017 | **730842** |
| DRM10019 | **811046** |
| DRM10020 | **730117** |
| DRM10024 | **730857** |
| DRM10025 | **730858** |
| DRM10026 | **731300** |
| DRM10030 | **883954** |
| DRM10032 | **883956** |

| IAM | Valeo |
|---|---|
| **DENSO** | |
| DRM10034 | **730484** |
| DRM10035 | **730483** |
| DRM10036 | **730484** |
| DRM10037 | **730559** |
| DRM10038 | **731736** |
| DRM10039 | **732003** |
| DRM10040 | **732003** |
| DRM10041 | **731735** |
| DRM10042 | **731734** |
| DRM10045 | **734272** |
| DRM10045 | **734273** |
| DRM10046 | **734272** |
| DRM10046 | **734274** |
| DRM10050 | **732731** |
| DRM10051 | **732732** |
| DRM10052 | **732735** |
| DRM10060 | **731992** |
| DRM10061 | **734772** |
| DRM10070 | **731550** |
| DRM10071 | **731257** |
| DRM10072 | **734288** |
| DRM10073 | **734699** |
| DRM10074 | **734321** |
| DRM10085 | **730123** |
| DRM10086 | **730590** |
| DRM10090 | **731492** |
| DRM10091 | **730124** |
| DRM10092 | **819176** |
| DRM10093 | **819320** |
| DRM10097 | **730124** |
| DRM10098 | **731779** |
| DRM10100 | **731782** |
| DRM10101 | **732497** |
| DRM11001 | **730423** |
| DRM11003 | **731434** |
| DRM12001 | **734231** |
| DRM12005 | **734231** |
| DRM12006 | **734449** |
| DRM13001 | **731980** |
| DRM13002 | **734235** |
| DRM13004 | **734236** |
| DRM13005 | **734238** |
| DRM13006 | **734237** |
| DRM13010 | **734364** |
| DRM13011 | **734363** |
| DRM13012 | **734364** |
| DRM16001 | **734120** |
| DRM16002 | **731073** |
| DRM17001 | **730883** |
| DRM17004 | **732460** |
| DRM17010 | **732442** |
| DRM17025 | **883860** |
| DRM17026 | **819376** |
| DRM17027 | **819368** |
| DRM17028 | **819368** |
| DRM17029 | **819201** |
| DRM17030 | **819377** |
| DRM17031 | **819373** |
| DRM17032 | **819387** |
| DRM17036 | **732605** |
| DRM17037 | **732591** |
| DRM17039 | **732458** |
| DRM17061 | **730344** |
| DRM17064 | **883876** |
| DRM17066 | **730344** |
| DRM17067 | **819383** |
| DRM17068 | **730344** |
| DRM17071 | **731805** |
| DRM17073 | **731808** |
| DRM17075 | **731807** |
| DRM17079 | **732741** |
| DRM17080 | **732740** |
| DRM17082 | **732742** |
| DRM17085 | **734803** |
| DRM17086 | **732446** |
| DRM17087 | **732462** |
| DRM17088 | **731294** |
| DRM17091 | **734805** |

| IAM | Valeo |
|---|---|
| **DENSO** | |
| DRM17092 | **734801** |
| DRM18003 | **732540** |
| DRM18004 | **731642** |
| DRM18010 | **732524** |
| DRM19010 | **732529** |
| DRM19011 | **732528** |
| DRM20010 | **730993** |
| DRM20011 | **730994** |
| DRM20013 | **734429** |
| DRM20014 | **731022** |
| DRM20015 | **734429** |
| DRM20016 | **734388** |
| DRM20017 | **732548** |
| DRM20018 | **732550** |
| DRM20020 | **731175** |
| DRM20021 | **731174** |
| DRM20021 | **731175** |
| DRM20022 | **731174** |
| DRM20023 | **730396** |
| DRM20024 | **730395** |
| DRM20025 | **731170** |
| DRM20026 | **731847** |
| DRM20026 | **732347** |
| DRM20027 | **732347** |
| DRM20031 | **883880** |
| DRM20031 | **883881** |
| DRM20032 | **883858** |
| DRM20032 | **730125** |
| DRM20034 | **883859** |
| DRM20035 | **883857** |
| DRM20036 | **731179** |
| DRM20037 | **731013** |
| DRM20038 | **732826** |
| DRM20039 | **732824** |
| DRM20040 | **732825** |
| DRM20041 | **732606** |
| DRM20042 | **732032** |
| DRM20043 | **734271** |
| DRM20045 | **734464** |
| DRM20064 | **883751** |
| DRM20065 | **883856** |
| DRM20080 | **732723** |
| DRM20081 | **732551** |
| DRM20082 | **732724** |
| DRM20083 | **732729** |
| DRM20084 | **732550** |
| DRM20085 | **734322** |
| DRM20086 | **732549** |
| DRM20087 | **732877** |
| DRM20088 | **734339** |
| DRM20090 | **735040** |
| DRM20091 | **734385** |
| DRM20092 | **734384** |
| DRM20095 | **735097** |
| DRM21002 | **730569** |
| DRM21003 | **731186** |
| DRM21004 | **731530** |
| DRM21010 | **810827** |
| DRM21012 | **730018** |
| DRM21013 | **810892** |
| DRM21020 | **732885** |
| DRM21021 | **732910** |
| DRM21030 | **732893** |
| DRM21031 | **732891** |
| DRM21032 | **732892** |
| DRM21032 | **732909** |
| DRM21033 | **732890** |
| DRM21033 | **732908** |
| DRM21034 | **732904** |
| DRM21034 | **732908** |
| DRM21050 | **731381** |
| DRM21050 | **731383** |
| DRM21055 | **734338** |
| DRM21070 | **730071** |
| DRM21600 | **735069** |
| DRM21600 | **735072** |
| DRM21602 | **735069** |
| DRM21602 | **735072** |

| IAM | Valeo |
|---|---|
| **DENSO** | |
| DRM21603 | **735070** |
| DRM23001 | **816658** |
| DRM23002 | **816655** |
| DRM23003 | **816654** |
| DRM23004 | **883875** |
| DRM23005 | **816656** |
| DRM23006 | **816657** |
| DRM23007 | **730183** |
| DRM23008 | **731378** |
| DRM23009 | **732071** |
| DRM23011 | **732474** |
| DRM23012 | **730055** |
| DRM23013 | **730551** |
| DRM23014 | **732720** |
| DRM23015 | **732523** |
| DRM23020 | **730140** |
| DRM23021 | **730140** |
| DRM23022 | **816552** |
| DRM23023 | **731529** |
| DRM23023 | **734285** |
| DRM23024 | **734284** |
| DRM23025 | **734284** |
| DRM23026 | **883959** |
| DRM23029 | **810927** |
| DRM23030 | **731910** |
| DRM23031 | **732072** |
| DRM23032 | **732389** |
| DRM23050 | **731380** |
| DRM23051 | **731538** |
| DRM23053 | **732316** |
| DRM23054 | **731379** |
| DRM23055 | **732873** |
| DRM23056 | **732874** |
| DRM23080 | **730633** |
| DRM23081 | **731552** |
| DRM23082 | **732051** |
| DRM23083 | **732827** |
| DRM23084 | **732828** |
| DRM23090 | **732798** |
| DRM23091 | **732050** |
| DRM23092 | **732918** |
| DRM23095 | **732853** |
| DRM23096 | **732846** |
| DRM23097 | **732902** |
| DRM23098 | **732911** |
| DRM24001 | **731215** |
| DRM24002 | **731243** |
| DRM24003 | **731215** |
| DRM24004 | **732758** |
| DRM24005 | **732759** |
| DRM24012 | **730565** |
| DRM24013 | **731815** |
| DRM24013 | **732759** |
| DRM24014 | **731818** |
| DRM25001 | **810965** |
| DRM25002 | **810965** |
| DRM25005 | **732108** |
| DRM25008 | **732108** |
| DRM25008 | **732110** |
| DRM25011 | **732120** |
| DRM25012 | **732123** |
| DRM25013 | **732121** |
| DRM26001 | **731265** |
| DRM26002 | **883958** |
| DRM26005 | **732698** |
| DRM26006 | **730955** |
| DRM26007 | **730946** |
| DRM26007 | **731606** |
| DRM26007 | **732175** |
| DRM26008 | **730948** |
| DRM26009 | **730945** |
| DRM26040 | **732710** |
| DRM27002 | **732863** |
| DRM27003 | **732864** |
| DRM27004 | **732864** |
| DRM27005 | **732862** |
| DRM28003 | **730455** |
| DRM29001 | **732750** |

| IAM | Valeo |
|---|---|
| **DENSO** | |
| DRM32002 | **731607** |
| DRM32004 | **883869** |
| DRM32004 | **883820** |
| DRM32005 | **730504** |
| DRM32007 | **730503** |
| DRM32008 | **731127** |
| DRM32009 | **731032** |
| DRM32015 | **732872** |
| DRM32016 | **734335** |
| DRM32016 | **735120** |
| DRM32017 | **734333** |
| DRM32018 | **734332** |
| DRM32022 | **883819** |
| DRM32024 | **883870** |
| DRM32025 | **883871** |
| DRM32027 | **732437** |
| DRM32029 | **732361** |
| DRM32030 | **730956** |
| DRM32032 | **883818** |
| DRM32033 | **816703** |
| DRM32035 | **731268** |
| DRM33004 | **810968** |
| DRM33004 | **810970** |
| DRM33031 | **732366** |
| DRM33042 | **732365** |
| DRM33050 | **732368** |
| DRM33053 | **732369** |
| DRM33060 | **732525** |
| DRM33061 | **732524** |
| DRM50019 | **735574** |
| DRM50032 | **735572** |
| DRR01010 | **812279** |
| DRR01011 | **812278** |
| DRR09001 | **812281** |
| DRR09002 | **812281** |
| DRR09010 | **812156** |
| DRR09010 | **811075** |
| DRR09010 | **811397** |
| DRR09020 | **811066** |
| DRR09030 | **812023** |
| DRR09031 | **812141** |
| DRR09033 | **812358** |
| DRR09040 | **811397** |
| DRR09041 | **811065** |
| DRR09042 | **812336** |
| DRR09060 | **812145** |
| DRR09070 | **812280** |
| DRR09070 | **812211** |
| DRR09075 | **812384** |
| DRR09080 | **812383** |
| DRR09081 | **812303** |
| DRR09090 | **812329** |
| DRR10002 | **812057** |
| DRR20001 | **812146** |
| DRR21001 | **812338** |
| DRR21002 | **812339** |
| DRR21003 | **812399** |
| DRR23001 | **812169** |
| DRR23010 | **883790** |
| DRR23011 | **883790** |
| DRR23012 | **812139** |
| DRR23013 | **812376** |
| DRR23016 | **812154** |
| DRR33001 | **812326** |
| **FRIGAIR** | |
| 1012008 | **730119** |
| 1012011 | **730172** |
| 1012024 | **730578** |
| 1012025 | **730595** |
| 1012035 | **731215** |
| 1022032 | **819422** |
| 1023001 | **731509** |
| 1023002 | **819397** |
| 1023003 | **730365** |
| 1023004 | **819412** |
| 1023005 | **819413** |
| 1023006 | **732593** |

| IAM | Valeo |
|---|---|
| **FRIGAIR** | |
| 1023007 | **732198** |
| 1023009 | **731514** |
| 1023072 | **732456** |
| 1023073 | **734276** |
| 1023074 | **734276** |
| 1023100 | **734301** |
| 1023101 | **734301** |
| 1023102 | **734277** |
| 1023103 | **732099** |
| 1023105 | **731520** |
| 1023106 | **734421** |
| 1023108 | **734895** |
| 1023109 | **734896** |
| 1023121 | **819412** |
| 1032009 | **810827** |
| 1032014 | **883866** |
| 1032015 | **730507** |
| 1032016 | **730508** |
| 1032017 | **730632** |
| 1032023 | **731173** |
| 1032029 | **730317** |
| 1032029 | **731177** |
| 1032035 | **731530** |
| 1032223 | **731498** |
| 1032223 | **731528** |
| 1032225 | **731527** |
| 1033011 | **730897** |
| 1033012 | **730635** |
| 1033013 | **816715** |
| 1033019 | **730959** |
| 1033019 | **730958** |
| 1033020 | **730630** |
| 1033021 | **816716** |
| 1033021 | **730507** |
| 1033022 | **731297** |
| 1033023 | **730958** |
| 1033025 | **730982** |
| 1033026 | **734455** |
| 1033027 | **731289** |
| 1033028 | **816554** |
| 1033036 | **730927** |
| 1033037 | **731296** |
| 1033038 | **730498** |
| 1033038 | **816706** |
| 1033039 | **730491** |
| 1033040 | **731570** |
| 1033042 | **732892** |
| 1033043 | **732565** |
| 1033043 | **732577** |
| 1033043 | **732620** |
| 1033044 | **732518** |
| 1033045 | **732534** |
| 1033046 | **732535** |
| 1033047 | **732520** |
| 1033050 | **732831** |
| 1033051 | **732930** |
| 1033052 | **732930** |
| 1033053 | **732831** |
| 1033054 | **732930** |
| 1033055 | **732892** |
| 1033055 | **732909** |
| 1033056 | **732887** |
| 1033057 | **732890** |
| 1033057 | **732908** |
| 1033058 | **732890** |
| 1033059 | **732893** |
| 1033060 | **732895** |
| 1033063 | **732598** |
| 1033065 | **732880** |
| 1033066 | **732881** |
| 1033067 | **732830** |
| 1033068 | **735069** |
| 1033068 | **735072** |
| 1033069 | **730506** |
| 1033069 | **735070** |
| 1033070 | **731744** |
| 1042024 | **811387** |
| 1042025 | **883825** |

| IAM | Valeo |
|---|---|
| **FRIGAIR** | |
| 1042053 | **883053** |
| 1042074 | **730519** |
| 1042075 | **730309** |
| 1042075 | **730520** |
| 1043001 | **730976** |
| 1043002 | **731562** |
| 1043003 | **730980** |
| 1043003 | **731374** |
| 1043005 | **732705** |
| 1043006 | **730980** |
| 1043008 | **811067** |
| 1043009 | **730991** |
| 1043013 | **811385** |
| 1043014 | **883811** |
| 1043015 | **883812** |
| 1043016 | **883813** |
| 1043018 | **816707** |
| 1043019 | **734220** |
| 1043022 | **732851** |
| 1043030 | **734225** |
| 1043031 | **732580** |
| 1043031 | **732582** |
| 1043033 | **732584** |
| 1043037 | **734237** |
| 1043039 | **734238** |
| 1043040 | **731168** |
| 1043040 | **731166** |
| 1043044 | **734457** |
| 1043045 | **732948** |
| 1043049 | **734459** |
| 1043063 | **732006** |
| 1043067 | **811071** |
| 1043068 | **731591** |
| 1043068 | **731592** |
| 1043068 | **811071** |
| 1043068 | **811073** |
| 1043070 | **730838** |
| 1043070 | **810949** |
| 1043071 | **811071** |
| 1043072 | **811069** |
| 1043073 | **811070** |
| 1043083 | **811071** |
| 1043084 | **731561** |
| 1043084 | **731591** |
| 1043084 | **811073** |
| 1043085 | **811073** |
| 1043086 | **731972** |
| 1043087 | **731973** |
| 1043088 | **731981** |
| 1043088 | **732557** |
| 1043089 | **732787** |
| 1043091 | **732007** |
| 1043091 | **732005** |
| 1043092 | **731303** |
| 1043093 | **732503** |
| 1043097 | **731302** |
| 1043097 | **731303** |
| 1043100 | **731974** |
| 1043102 | **732685** |
| 1043103 | **732913** |
| 1043104 | **735171** |
| 1043105 | **735171** |
| 1043107 | **734228** |
| 1043108 | **734229** |
| 1043109 | **734363** |
| 1043110 | **734362** |
| 1043111 | **734364** |
| 1043113 | **734361** |
| 1043117 | **734932** |
| 1043118 | **732925** |
| 1043119 | **732924** |
| 1043123 | **735172** |
| 1043125 | **732913** |
| 1043126 | **734224** |
| 1043127 | **735042** |
| 1043128 | **735040** |
| 1043129 | **735041** |
| 1045037 | **883428** |

| IAM | Valeo |
|---|---|
| **FRIGAIR** | |
| 1052001 | **819151** |
| 1052004 | **811046** |
| 1052005 | **883954** |
| 1052006 | **730631** |
| 1052008 | **730116** |
| 1052009 | **883956** |
| 1052010 | **730114** |
| 1052021 | **730842** |
| 1052027 | **730590** |
| 1052029 | **730483** |
| 1052030 | **730484** |
| 1052034 | **730856** |
| 1052034 | **730858** |
| 1052035 | **730857** |
| 1052050 | **731550** |
| 1052051 | **731257** |
| 1053015 | **730117** |
| 1053041 | **731300** |
| 1053047 | **730858** |
| 1053048 | **732732** |
| 1053049 | **730559** |
| 1053052 | **731385** |
| 1053053 | **731386** |
| 1053054 | **731992** |
| 1053055 | **734772** |
| 1053056 | **732731** |
| 1053057 | **732735** |
| 1053060 | **731734** |
| 1053061 | **731617** |
| 1053062 | **731735** |
| 1053063 | **732003** |
| 1053063 | **731736** |
| 1053066 | **732003** |
| 1053067 | **735046** |
| 1053069 | **734273** |
| 1053071 | **734303** |
| 1053074 | **734286** |
| 1053075 | **734287** |
| 1053076 | **734288** |
| 1053077 | **734274** |
| 1053079 | **734392** |
| 1053081 | **734321** |
| 1053084 | **734320** |
| 1062039 | **732460** |
| 1062048 | **819383** |
| 1062048 | **730344** |
| 1062049 | **730344** |
| 1062051 | **731805** |
| 1062064 | **883860** |
| 1062066 | **819201** |
| 1062073 | **819377** |
| 1062076 | **819373** |
| 1062077 | **819387** |
| 1062078 | **819376** |
| 1062088 | **819368** |
| 1062089 | **810869** |
| 1062089 | **819368** |
| 1062092 | **883876** |
| 1063054 | **731808** |
| 1063057 | **732740** |
| 1063057 | **732741** |
| 1063063 | **731294** |
| 1063070 | **735231** |
| 1063079 | **732462** |
| 1063083 | **732736** |
| 1072009 | **883767** |
| 1072016 | **883857** |
| 1072017 | **883751** |
| 1072021 | **730396** |
| 1072024 | **819388** |
| 1072025 | **819389** |
| 1072029 | **731217** |
| 1072037 | **734429** |
| 1072038 | **731022** |
| 1072039 | **731170** |
| 1073003 | **732826** |
| 1073005 | **732824** |
| 1073005 | **734464** |

| IAM | Valeo |
|---|---|
| **FRIGAIR** | |
| 1073006 | **732825** |
| 1073010 | **731013** |
| 1073011 | **883771** |
| 1073011 | **883920** |
| 1073014 | **883856** |
| 1073026 | **883859** |
| 1073030 | **883880** |
| 1073031 | **883881** |
| 1073033 | **730975** |
| 1073043 | **732032** |
| 1073044 | **734271** |
| 1073045 | **731179** |
| 1073047 | **731174** |
| 1073047 | **731175** |
| 1073049 | **731393** |
| 1073056 | **732548** |
| 1073056 | **732549** |
| 1073057 | **730994** |
| 1073058 | **731393** |
| 1073058 | **731847** |
| 1073058 | **732347** |
| 1073059 | **730395** |
| 1073060 | **731175** |
| 1073061 | **732347** |
| 1073062 | **732729** |
| 1073062 | **732795** |
| 1073063 | **732550** |
| 1073075 | **731846** |
| 1073078 | **732724** |
| 1073079 | **732878** |
| 1073080 | **732723** |
| 1073081 | **732348** |
| 1073086 | **734381** |
| 1073087 | **734382** |
| 1073088 | **734380** |
| 1073091 | **734432** |
| 1073092 | **731237** |
| 1073094 | **734385** |
| 1073095 | **734384** |
| 1073097 | **732551** |
| 1073099 | **732724** |
| 1073099 | **732795** |
| 1073102 | **732877** |
| 1081010 | **730018** |
| 1081011 | **810892** |
| 1082009 | **810827** |
| 1082054 | **810955** |
| 1082057 | **730985** |
| 1082058 | **730983** |
| 1082060 | **730575** |
| 1082063 | **730015** |
| 1082064 | **730634** |
| 1082065 | **731186** |
| 1082066 | **730569** |
| 1083034 | **732885** |
| 1083035 | **732886** |
| 1083036 | **732910** |
| 1083040 | **731381** |
| 1083040 | **731382** |
| 1083041 | **731383** |
| 1083041 | **731384** |
| 1083047 | **731526** |
| 1083048 | **731498** |
| 1083051 | **810915** |
| 1083053 | **810919** |
| 1083056 | **730927** |
| 1083059 | **730572** |
| 1083061 | **730575** |
| 1083063 | **731181** |
| 1083063 | **731010** |
| 1083069 | **732910** |
| 1083069 | **734346** |
| 1083070 | **732517** |
| 1083071 | **732904** |
| 1083072 | **732910** |
| 1083073 | **734366** |
| 1083074 | **734423** |
| 1083075 | **734338** |

| IAM | Valeo |
|---|---|
| **FRIGAIR** | |
| 1083076 | **732894** |
| 1083076 | **734463** |
| 1083077 | **732599** |
| 1083078 | **732807** |
| 1083079 | **732882** |
| 1083362 | **730974** |
| 1092007 | **883463** |
| 1092013 | **883282** |
| 1092016 | **883959** |
| 1092017 | **810851** |
| 1092035 | **810835** |
| 1092045 | **730140** |
| 1092047 | **883851** |
| 1092048 | **810889** |
| 1092061 | **730183** |
| 1092063 | **810912** |
| 1092064 | **730502** |
| 1093014 | **731161** |
| 1093019 | **731379** |
| 1093046 | **730180** |
| 1093049 | **816658** |
| 1093051 | **816654** |
| 1093052 | **816655** |
| 1093053 | **816656** |
| 1093054 | **816657** |
| 1093055 | **883875** |
| 1093056 | **730055** |
| 1093058 | **816552** |
| 1093067 | **730551** |
| 1093068 | **731380** |
| 1093069 | **731380** |
| 1093078 | **732621** |
| 1093079 | **731378** |
| 1093086 | **732874** |
| 1093090 | **732946** |
| 1096036 | **810843** |
| 1096037 | **810843** |
| 1102002 | **731537** |
| 1102003 | **731537** |
| 1102003 | **732361** |
| 1102031 | **734606** |
| 1102032 | **731401** |
| 1102034 | **732438** |
| 1102042 | **883871** |
| 1102043 | **732436** |
| 1102044 | **730349** |
| 1102048 | **731503** |
| 1102049 | **731422** |
| 1102050 | **730360** |
| 1102051 | **730361** |
| 1102090 | **819259** |
| 1102091 | **819260** |
| 1102092 | **883820** |
| 1102093 | **734586** |
| 1103005 | **731757** |
| 1103006 | **734752** |
| 1103007 | **734753** |
| 1103008 | **731755** |
| 1103014 | **730504** |
| 1103020 | **730503** |
| 1103022 | **731127** |
| 1103023 | **731032** |
| 1103024 | **731025** |
| 1103026 | **732437** |
| 1103027 | **731267** |
| 1103029 | **731606** |
| 1103029 | **732427** |
| 1103035 | **883870** |
| 1103036 | **883869** |
| 1103041 | **730485** |
| 1103045 | **730956** |
| 1103058 | **883720** |
| 1103063 | **731005** |
| 1103075 | **883727** |
| 1103086 | **883818** |
| 1103088 | **883819** |
| 1103094 | **730955** |
| 1103097 | **731006** |

| IAM | Valeo |
|---|---|
| **FRIGAIR** | |
| 1103098 | **731007** |
| 1103099 | **731008** |
| 1103115 | **730362** |
| 1103119 | **732839** |
| 1103119 | **732963** |
| 1103120 | **731756** |
| 1103121 | **734268** |
| 1103122 | **734269** |
| 1103123 | **734270** |
| 1103129 | **734332** |
| 1103130 | **734335** |
| 1103132 | **730363** |
| 1103132 | **734751** |
| 1103329 | **731429** |
| 1113087 | **732525** |
| 1113089 | **732372** |
| 1122006 | **883958** |
| 1122007 | **883921** |
| 1122008 | **730542** |
| 1123009 | **730947** |
| 1123010 | **730945** |
| 1123011 | **730948** |
| 1123012 | **730946** |
| 1123013 | **731267** |
| 1123013 | **731268** |
| 1132002 | **811010** |
| 1132003 | **816710** |
| 1132004 | **731559** |
| 1132005 | **811068** |
| 1133006 | **732011** |
| 1133007 | **732012** |
| 1133008 | **732248** |
| 1133010 | **732505** |
| 1133011 | **734283** |
| 1133013 | **731278** |
| 1133014 | **732696** |
| 1133018 | **735021** |
| 1153012 | **730471** |
| 1153015 | **731105** |
| 1153016 | **730469** |
| 1153017 | **732561** |
| 1153056 | **731464** |
| 1153058 | **731441** |
| 1163002 | **731054** |
| 1163011 | **731649** |
| 1163016 | **732613** |
| 1163026 | **734480** |
| 1163027 | **732524** |
| 1163230 | **732612** |
| 1163230 | **732613** |
| 1183008 | **731579** |
| 1183009 | **731723** |
| 1192001 | **731434** |
| 1192002 | **731469** |
| 1192003 | **730565** |
| 1192004 | **730565** |
| 1192005 | **730168** |
| 1192011 | **731100** |
| 1192070 | **731471** |
| 1193006 | **731458** |
| 1193008 | **734110** |
| 1193009 | **734112** |
| 1193010 | **734114** |
| 1193012 | **731471** |
| 1193013 | **734109** |
| 1212007 | **731193** |
| 1212008 | **731090** |
| 1212011 | **732718** |
| 1212012 | **732718** |
| 1212013 | **731287** |
| 1212532 | **731664** |
| 1212550 | **732405** |
| 1213034 | **734705** |
| 1213034 | **734736** |
| 1213037 | **735062** |
| 1213038 | **735081** |
| 1213039 | **735063** |
| 1213042 | **734729** |

| IAM | Valeo |
|---|---|
| **FRIGAIR** | |
| 1242001 | **730455** |
| 1242001 | **731456** |
| 1272042 | **732326** |
| 1273001 | **734123** |
| 1273002 | **734124** |
| 1273043 | **732326** |
| 1273044 | **732475** |
| 1273045 | **732345** |
| 1273046 | **734120** |
| 1273047 | **731372** |
| 1273048 | **731073** |
| 1283051 | **734255** |
| 1283052 | **734254** |
| 1283053 | **734267** |
| 1283054 | **731454** |
| 1283059 | **734256** |
| 1283061 | **734256** |
| 1283063 | **734950** |
| 1283064 | **734258** |
| 1283068 | **734261** |
| 1283069 | **732487** |
| 1283071 | **732488** |
| 1283087 | **734259** |
| 1283088 | **734909** |
| 1283091 | **734905** |
| 1283092 | **734908** |
| 1283094 | **734949** |
| 1293002 | **734785** |
| 1333001 | **735079** |
| 1333002 | **731042** |
| 1333002 | **734262** |
| 1333004 | **734264** |
| 1333004 | **732325** |
| 2042012 | **883787** |
| 2042015 | **811348** |
| 2042019 | **734231** |
| 2042020 | **734449** |
| 2042024 | **734448** |
| 2042030 | **730997** |
| 2042030 | **731611** |
| 2042031 | **730995** |
| 2042032 | **730999** |
| 2042034 | **730997** |
| 2042034 | **731611** |
| 2043016 | **816647** |
| 2043027 | **883765** |
| 2043065 | **731572** |
| 2043066 | **730334** |
| 2043066 | **816649** |
| 2052001 | **819320** |
| 2052006 | **730124** |
| 2052006 | **819176** |
| 2053008 | **731779** |
| 2053010 | **731782** |
| 2053011 | **732497** |
| 2062074 | **730883** |
| 2062080 | **730229** |
| 2062082 | **730229** |
| 2062084 | **732472** |
| 2093004 | **732050** |
| 2373004 | **818749** |
| 5011564 | **698669** |
| 5021001 | **696119** |
| 5021001 | **696118** |
| 5021002 | **696123** |
| 5021003 | **696058** |
| 5021004 | **696119** |
| 5021006 | **696123** |
| 5021007 | **696120** |
| 5021008 | **696065** |
| 5022001 | **696058** |
| 5022003 | **696121** |
| 5022013 | **696275** |
| 5022013 | **696274** |
| 5030528 | **696141** |
| 5030528 | **696142** |
| 5030528 | **696174** |
| 5030631 | **698312** |

| IAM | Valeo |
|---|---|
| **FRIGAIR** | |
| 5031005 | **698342** |
| 5031256 | **696138** |
| 5031256 | **696140** |
| 5031256 | **696137** |
| 5031256 | **696132** |
| 5031315 | **696174** |
| 5031315 | **696177** |
| 5031315 | **696139** |
| 5031614 | **696212** |
| 5031614 | **698303** |
| 5031636 | **696211** |
| 5031650 | **696214** |
| 5041006 | **698484** |
| 5041031 | **696104** |
| 5041054 | **698786** |
| 5041120 | **696095** |
| 5041173 | **696095** |
| 5041191 | **696100** |
| 5041195 | **696101** |
| 5041196 | **696101** |
| 5041197 | **698179** |
| 5041198 | **698178** |
| 5041203 | **698562** |
| 5041213 | **696106** |
| 5041214 | **696197** |
| 5041215 | **696098** |
| 5041222 | **696099** |
| 5041223 | **698178** |
| 5041224 | **696102** |
| 5041404 | **696100** |
| 5041418 | **696094** |
| 5042019 | **696020** |
| 5042020 | **696021** |
| 5042020 | **696022** |
| 5042020 | **696023** |
| 5042022 | **696085** |
| 5042033 | **698483** |
| 5051010 | **696152** |
| 5051012 | **696154** |
| 5051012 | **696150** |
| 5051012 | **696153** |
| 5051012 | **696149** |
| 5051411 | **696277** |
| 5051416 | **696276** |
| 5051420 | **696151** |
| 5051427 | **696149** |
| 5051488 | **696157** |
| 5051651 | **696158** |
| 5051686 | **696159** |
| 5061013 | **696063** |
| 5061076 | **696068** |
| 5061280 | **696130** |
| 5071002 | **696172** |
| 5071808 | **696281** |
| 5081260 | **696074** |
| 5081260 | **696070** |
| 5081708 | **696069** |
| 5081708 | **696071** |
| 5091691 | **698084** |
| 5091692 | **698005** |
| 5091692 | **698316** |
| 5091694 | **698015** |
| 5091736 | **698302** |
| 5091738 | **696217** |
| 5091779 | **698085** |
| 5100417 | **698612** |
| 5101475 | **696036** |
| 5101487 | **698370** |
| 5101541 | **698367** |
| 5101545 | **696034** |
| 5101547 | **696067** |
| 5101548 | **696038** |
| 5101557 | **696042** |
| 5101572 | **698373** |
| 5101575 | **696042** |
| 5101656 | **696049** |
| 5101658 | **698368** |
| 5101663 | **698155** |

| IAM | Valeo |
|---|---|
| **FRIGAIR** | |
| 5101664 | **696055** |
| 5101671 | **696032** |
| 5101671 | **698371** |
| 5111005 | **696061** |
| 5131303 | **696109** |
| 5131308 | **696109** |
| 5131309 | **696108** |
| 5131313 | **696111** |
| 5131313 | **696113** |
| 5131314 | **696108** |
| 7023003 | **817874** |
| 7023006 | **818716** |
| 7033001 | **816823** |
| 7033002 | **816851** |
| 7033003 | **817437** |
| 7033004 | **817651** |
| 7043001 | **817941** |
| 7043003 | **818724** |
| 7043004 | **817632** |
| 7043009 | **817884** |
| 7043013 | **817881** |
| 7043014 | **817901** |
| 7043016 | **817860** |
| 7043017 | **817883** |
| 7043018 | **818711** |
| 7043018 | **818712** |
| 7043019 | **818725** |
| 7043022 | **817879** |
| 7043024 | **817650** |
| 7043025 | **816846** |
| 7043026 | **817882** |
| 7043027 | **816736** |
| 7043028 | **816731** |
| 7043029 | **816732** |
| 7043030 | **816733** |
| 7043031 | **816802** |
| 7043032 | **818777** |
| 7043033 | **818778** |
| 7043035 | **818736** |
| 7043036 | **818735** |
| 7043038 | **818778** |
| 7043039 | **818779** |
| 7043101 | **817896** |
| 7043102 | **816763** |
| 7043108 | **817897** |
| 7043121 | **817900** |
| 7043122 | **818823** |
| 7043123 | **818224** |
| 7043124 | **818824** |
| 7053006 | **817891** |
| 7053007 | **818800** |
| 7053008 | **817888** |
| 7053009 | **817887** |
| 7053010 | **817885** |
| 7053011 | **818718** |
| 7053012 | **818717** |
| 7053013 | **818802** |
| 7053015 | **818797** |
| 7063001 | **817760** |
| 7063001 | **818821** |
| 7063002 | **817909** |
| 7063003 | **817759** |
| 7063005 | **816890** |
| 7063006 | **818781** |
| 7063007 | **817264** |
| 7063008 | **816786** |
| 7063009 | **817281** |
| 7063010 | **818782** |
| 7063011 | **818784** |
| 7063013 | **818752** |
| 7063015 | **818755** |
| 7063016 | **817907** |
| 7063017 | **817905** |
| 7063501 | **818775** |
| 7063502 | **818774** |
| 7063503 | **816795** |
| 7063504 | **816917** |
| 7073003 | **817729** |

| IAM | Valeo |
|---|---|
| **FRIGAIR** | |
| 7083001 | **816918** |
| 7093002 | **816610** |
| 7093003 | **816730** |
| 7093004 | **817636** |
| 7093005 | **817554** |
| 7093006 | **816978** |
| 7093007 | **816979** |
| 7093008 | **816729** |
| 7093009 | **816717** |
| 7093010 | **816797** |
| 7093011 | **816961** |
| 7093012 | **817181** |
| 7093102 | **816836** |
| 7093103 | **817490** |
| 7103010 | **817764** |
| 7103011 | **817936** |
| 7103012 | **817937** |
| 7103013 | **818719** |
| 7103014 | **818812** |
| 7103014 | **817938** |
| 7103015 | **817936** |
| 7103015 | **818813** |
| 7103016 | **817761** |
| 7103017 | **817762** |
| 7103018 | **817556** |
| 7103020 | **817766** |
| 7103021 | **817767** |
| 7103024 | **818720** |
| 7103025 | **818827** |
| 7103026 | **818828** |
| 7103027 | **817864** |
| 7103028 | **818795** |
| 7103029 | **817872** |
| 7103102 | **817865** |
| 7103104 | **817625** |
| 7103105 | **818757** |
| 7103108 | **817457** |
| 7103108 | **817205** |
| 7113002 | **817774** |
| 7113004 | **817773** |
| 7113004 | **817774** |
| 7113004 | **817775** |
| 7113005 | **818875** |
| 7113006 | **818873** |
| 7113007 | **818879** |
| 7113008 | **818874** |
| 7113009 | **818871** |
| 7113501 | **818876** |
| 7113502 | **818877** |
| 7133102 | **817856** |
| 7133107 | **817863** |
| 7133108 | **817861** |
| 7133109 | **817862** |
| 7133110 | **818794** |
| 7223001 | **817772** |
| 7223002 | **817770** |
| 7223003 | **816853** |
| 7373002 | **818741** |
| 7373003 | **818743** |
| 7373004 | **818741** |
| 7383001 | **817369** |
| 7383002 | **816784** |
| 7383004 | **816793** |
| **INTERNATIONAL RADIATORS** | |
| 323746 | **698182** |
| 640754 | **696123** |
| 1002005 | **816710** |
| 1002007 | **811010** |
| 1002020 | **731561** |
| 1002026 | **811389** |
| 1002029 | **732012** |
| 1002035 | **811068** |
| 1002038 | **732013** |
| 1002048 | **811071** |
| 1002055 | **731251** |
| 1002056 | **731283** |
| 1002057 | **732248** |

| IAM | Valeo |
|---|---|
| **INTERNATIONAL RADIATORS** | |
| 1002068 | **731591** |
| 1002069 | **732011** |
| 1002075 | **732505** |
| 1002076 | **731251** |
| 1002076 | **731559** |
| 1002078 | **732854** |
| 1002079 | **732696** |
| 1002083 | **734733** |
| 1002084 | **734283** |
| 1002089 | **731283** |
| 1002101 | **735021** |
| 1004085 | **817861** |
| 1004086 | **817862** |
| 1004096 | **818794** |
| 1708746 | **696095** |
| 1754748 | **698179** |
| 1754749 | **698180** |
| 1756746 | **696098** |
| 1858746 | **696151** |
| 1858747 | **696152** |
| 1858751 | **696150** |
| 1858752 | **696153** |
| 1858753 | **696154** |
| 1865747 | **696157** |
| 1865747 | **698496** |
| 2002004 | **730119** |
| 2002024 | **730595** |
| 2002025 | **730595** |
| 2002033 | **730172** |
| 2002040 | **730578** |
| 2002041 | **730119** |
| 2002065 | **731235** |
| 2002067 | **732758** |
| 2002067 | **732759** |
| 2002069 | **730565** |
| 2002080 | **731215** |
| 2002094 | **731212** |
| 2002096 | **731211** |
| 2002097 | **732758** |
| 2002097 | **732759** |
| 2002100 | **731243** |
| 2002101 | **735224** |
| 2002110 | **731815** |
| 2002111 | **731818** |
| 2002118 | **731412** |
| 2002119 | **731816** |
| 2002120 | **731817** |
| 2002120 | **731076** |
| 2002121 | **734290** |
| 2002121 | **731820** |
| 2002122 | **731811** |
| 2002126 | **732402** |
| 2002133 | **730172** |
| 2002137 | **731491** |
| 2002149 | **734354** |
| 2002152 | **734829** |
| 2002153 | **734290** |
| 2002154 | **731817** |
| 2002163 | **732399** |
| 2002164 | **732400** |
| 2004181 | **818826** |
| 3002002 | **883863** |
| 3002026 | **819260** |
| 3002028 | **819259** |
| 3002030 | **883863** |
| 3002038 | **883863** |
| 3002040 | **731505** |
| 3002046 | **732440** |
| 3002047 | **730349** |
| 3002053 | **730349** |
| 3002055 | **734738** |
| 3002059 | **730349** |
| 3002059 | **731501** |
| 3002060 | **731760** |
| 3002077 | **730361** |
| 3002077 | **730360** |
| 3002081 | **730362** |
| 3002082 | **730362** |

| IAM | Valeo |
|---|---|
| **INTERNATIONAL RADIATORS** | |
| 3002083 | **734751** |
| 3002084 | **730363** |
| 3002085 | **731429** |
| 3002088 | **731430** |
| 3002089 | **731422** |
| 3002090 | **731428** |
| 3002092 | **731503** |
| 3002098 | **730972** |
| 3002099 | **734695** |
| 3002105 | **731537** |
| 3002108 | **731537** |
| 3002122 | **731755** |
| 3002123 | **731537** |
| 3002123 | **732361** |
| 3002124 | **731756** |
| 3002125 | **731757** |
| 3002129 | **731606** |
| 3002129 | **732175** |
| 3002139 | **734752** |
| 3002155 | **731606** |
| 3002155 | **732175** |
| 3002157 | **734753** |
| 3002158 | **734859** |
| 3002189 | **732811** |
| 3002195 | **732839** |
| 3002196 | **734754** |
| 3002197 | **734755** |
| 3002201 | **732963** |
| 3002202 | **734269** |
| 3002203 | **734418** |
| 3002204 | **734419** |
| 3002205 | **734269** |
| 3002206 | **734268** |
| 3002207 | **734270** |
| 3002213 | **733074** |
| 3002220 | **732785** |
| 3002229 | **735093** |
| 3004086 | **817761** |
| 3004102 | **817762** |
| 3004112 | **817625** |
| 3004136 | **817865** |
| 3004172 | **817457** |
| 3004186 | **817867** |
| 3004188 | **817869** |
| 3004188 | **817870** |
| 3004191 | **817864** |
| 3004192 | **817872** |
| 3004200 | **817653** |
| 3004208 | **817488** |
| 3004221 | **818757** |
| 3004224 | **817438** |
| 3004225 | **817625** |
| 3004249 | **818825** |
| 5824745 | **696041** |
| 5874746 | **696043** |
| 5874747 | **696179** |
| 5880745 | **698371** |
| 5880746 | **698370** |
| 5888745 | **698373** |
| 6002055 | **819395** |
| 6002069 | **734614** |
| 6002081 | **731509** |
| 6002082 | **731508** |
| 6002086 | **819397** |
| 6002086 | **819414** |
| 6002087 | **819415** |
| 6002094 | **732099** |
| 6002095 | **819418** |
| 6002096 | **810947** |
| 6002096 | **819422** |
| 6002097 | **819422** |
| 6002102 | **734615** |
| 6002104 | **819414** |
| 6002106 | **731520** |
| 6002121 | **731725** |
| 6002121 | **819412** |
| 6002122 | **819413** |
| 6002124 | **732198** |

| IAM | Valeo |
|---|---|
| **INTERNATIONAL RADIATORS** | |
| 6002125 | **731511** |
| 6002126 | **819415** |
| 6002128 | **734615** |
| 6002133 | **732593** |
| 6002134 | **734421** |
| 6002135 | **730365** |
| 6002136 | **731514** |
| 6002138 | **819418** |
| 6002145 | **732099** |
| 6002159 | **731523** |
| 6002163 | **732456** |
| 6002164 | **731523** |
| 6002179 | **734289** |
| 6002186 | **734301** |
| 6002194 | **819418** |
| 6002201 | **734301** |
| 6002202 | **731766** |
| 6002205 | **734276** |
| 6002222 | **732199** |
| 6002233 | **734277** |
| 6002234 | **734394** |
| 6002235 | **735223** |
| 6002235 | **735233** |
| 6002236 | **734396** |
| 6002275 | **734895** |
| 6002277 | **734395** |
| 6002278 | **734276** |
| 6002284 | **734898** |
| 6002301 | **735223** |
| 6002301 | **735233** |
| 6004130 | **817873** |
| 6004193 | **817875** |
| 6004207 | **817874** |
| 6004260 | **817876** |
| 6004262 | **818713** |
| 6004280 | **818715** |
| 6004282 | **818716** |
| 7002027 | **732780** |
| 7002028 | **731723** |
| 7002031 | **732426** |
| 7002032 | **731578** |
| 7002033 | **731531** |
| 7002034 | **731579** |
| 7002055 | **731749** |
| 7002072 | **732704** |
| 7002077 | **732757** |
| 7002080 | **732883** |
| 7004035 | **816959** |
| 9002001 | **883464** |
| 9002002 | **883715** |
| 9002007 | **810811** |
| 9002010 | **810836** |
| 9002011 | **883773** |
| 9002013 | **883774** |
| 9002027 | **883866** |
| 9002028 | **810954** |
| 9002033 | **730897** |
| 9002034 | **730896** |
| 9002035 | **730635** |
| 9002036 | **816554** |
| 9002037 | **819428** |
| 9002040 | **816706** |
| 9002041 | **961149** |
| 9002046 | **730491** |
| 9002049 | **730498** |
| 9002051 | **730494** |
| 9002057 | **816716** |
| 9002059 | **816715** |
| 9002060 | **730508** |
| 9002062 | **730507** |
| 9002062 | **734454** |
| 9002063 | **730934** |
| 9002064 | **730959** |
| 9002065 | **730958** |
| 9002066 | **730958** |
| 9002067 | **730960** |
| 9002068 | **730957** |
| 9002070 | **730632** |

| IAM | Valeo |
|---|---|
| **INTERNATIONAL RADIATORS** | |
| 9002071 | **730982** |
| 9002072 | **731009** |
| 9002073 | **731173** |
| 9002074 | **731185** |
| 9002077 | **731165** |
| 9002079 | **731166** |
| 9002080 | **731177** |
| 9002089 | **731168** |
| 9002101 | **731297** |
| 9002102 | **731289** |
| 9002104 | **731298** |
| 9002108 | **731181** |
| 9002109 | **731180** |
| 9002110 | **731176** |
| 9002112 | **731181** |
| 9002114 | **731176** |
| 9002115 | **731498** |
| 9002115 | **731528** |
| 9002116 | **731526** |
| 9002116 | **731527** |
| 9002117 | **731527** |
| 9002120 | **731530** |
| 9002121 | **731391** |
| 9002123 | **731389** |
| 9002132 | **731584** |
| 9002133 | **731584** |
| 9002137 | **731570** |
| 9002140 | **731296** |
| 9002142 | **731743** |
| 9002144 | **734760** |
| 9002147 | **731743** |
| 9002148 | **731744** |
| 9002149 | **731295** |
| 9002151 | **732518** |
| 9002151 | **732577** |
| 9002153 | **732517** |
| 9002154 | **732534** |
| 9002155 | **732535** |
| 9002156 | **732520** |
| 9002157 | **732520** |
| 9002159 | **732620** |
| 9002165 | **734455** |
| 9002167 | **732564** |
| 9002168 | **732563** |
| 9002171 | **732618** |
| 9002182 | **732617** |
| 9002187 | **732831** |
| 9002188 | **732831** |
| 9002189 | **732930** |
| 9002190 | **732930** |
| 9002193 | **732565** |
| 9002194 | **732517** |
| 9002195 | **734456** |
| 9002196 | **731527** |
| 9002197 | **731527** |
| 9002198 | **731570** |
| 9002199 | **732520** |
| 9002206 | **732807** |
| 9002208 | **732692** |
| 9002227 | **732930** |
| 9002228 | **735068** |
| 9002236 | **731495** |
| 9004050 | **816889** |
| 9004081 | **816823** |
| 9004086 | **816851** |
| 9004130 | **816919** |
| 9004212 | **817651** |
| 13002013 | **819219** |
| 13002034 | **731134** |
| 13002046 | **730404** |
| 13002048 | **730408** |
| 13002049 | **731082** |
| 13002050 | **731082** |
| 13002054 | **731147** |
| 13002064 | **731085** |
| 13002070 | **731188** |
| 13002074 | **731657** |
| 13002081 | **730406** |

| IAM | Valeo |
|---|---|
| **INTERNATIONAL RADIATORS** | |
| 13002084 | **730407** |
| 13002085 | **731661** |
| 13002086 | **731083** |
| 13002088 | **732596** |
| 13002092 | **731193** |
| 13002094 | **731090** |
| 13002096 | **731090** |
| 13002098 | **731087** |
| 13002101 | **731187** |
| 13002111 | **732589** |
| 13002113 | **734819** |
| 13002116 | **731670** |
| 13002117 | **731662** |
| 13002122 | **731202** |
| 13002123 | **731664** |
| 13002126 | **731674** |
| 13002130 | **732718** |
| 13002131 | **731287** |
| 13002135 | **734151** |
| 13002143 | **731261** |
| 13002144 | **731656** |
| 13002148 | **732592** |
| 13002155 | **732484** |
| 13002156 | **734671** |
| 13002173 | **734427** |
| 13002174 | **732405** |
| 13002179 | **732529** |
| 13002181 | **732528** |
| 13002196 | **734215** |
| 13002206 | **734446** |
| 13002215 | **734705** |
| 13002215 | **734736** |
| 13002216 | **734708** |
| 13002217 | **734729** |
| 13002218 | **734473** |
| 13002223 | **734706** |
| 13002235 | **732903** |
| 13002237 | **735061** |
| 17002012 | **883428** |
| 17002025 | **883053** |
| 17002028 | **811392** |
| 17002038 | **883811** |
| 17002039 | **883812** |
| 17002039 | **883827** |
| 17002040 | **883813** |
| 17002047 | **883806** |
| 17002056 | **811387** |
| 17002056 | **883825** |
| 17002058 | **811067** |
| 17002059 | **883827** |
| 17002074 | **811392** |
| 17002076 | **811385** |
| 17002077 | **811386** |
| 17002078 | **811387** |
| 17002094 | **811071** |
| 17002095 | **811073** |
| 17002096 | **810949** |
| 17002097 | **816707** |
| 17002099 | **810949** |
| 17002100 | **811069** |
| 17002101 | **811070** |
| 17002109 | **811071** |
| 17002115 | **730309** |
| 17002115 | **730520** |
| 17002120 | **811070** |
| 17002122 | **730991** |
| 17002132 | **730519** |
| 17002138 | **730976** |
| 17002139 | **731562** |
| 17002140 | **731562** |
| 17002140 | **732705** |
| 17002141 | **730980** |
| 17002141 | **731374** |
| 17002142 | **730980** |
| 17002143 | **730981** |
| 17002147 | **731977** |
| 17002148 | **731976** |
| 17002149 | **731975** |

| IAM | Valeo |
|---|---|
| **INTERNATIONAL RADIATORS** | |
| 17002158 | **731303** |
| 17002158 | **731302** |
| 17002159 | **734239** |
| 17002160 | **731304** |
| 17002161 | **731303** |
| 17002162 | **731306** |
| 17002166 | **731979** |
| 17002167 | **731972** |
| 17002167 | **732688** |
| 17002180 | **731973** |
| 17002181 | **731978** |
| 17002182 | **731981** |
| 17002184 | **732688** |
| 17002185 | **731974** |
| 17002185 | **732557** |
| 17002188 | **732787** |
| 17002188 | **734220** |
| 17002190 | **731592** |
| 17002199 | **734219** |
| 17002200 | **732557** |
| 17002201 | **732557** |
| 17002207 | **734220** |
| 17002208 | **734225** |
| 17002210 | **732913** |
| 17002211 | **734224** |
| 17002212 | **732913** |
| 17002218 | **732578** |
| 17002224 | **732006** |
| 17002224 | **732812** |
| 17002225 | **732005** |
| 17002226 | **732007** |
| 17002227 | **732623** |
| 17002228 | **731558** |
| 17002229 | **732503** |
| 17002230 | **732218** |
| 17002231 | **732787** |
| 17002232 | **732147** |
| 17002233 | **732788** |
| 17002235 | **731593** |
| 17002236 | **732685** |
| 17002239 | **732789** |
| 17002243 | **734228** |
| 17002244 | **734229** |
| 17002250 | **734692** |
| 17002251 | **734228** |
| 17002258 | **732792** |
| 17002260 | **734768** |
| 17002261 | **735171** |
| 17002262 | **735171** |
| 17002263 | **735172** |
| 17002264 | **735172** |
| 17002270 | **734220** |
| 17002275 | **732851** |
| 17002279 | **734361** |
| 17002281 | **734459** |
| 17002290 | **734457** |
| 17002291 | **732924** |
| 17002292 | **732925** |
| 17002295 | **734932** |
| 17002297 | **734458** |
| 17002299 | **732923** |
| 17002300 | **734363** |
| 17002301 | **732913** |
| 17002308 | **734362** |
| 17002311 | **735040** |
| 17002312 | **735041** |
| 17002317 | **732557** |
| 17002318 | **735042** |
| 17002322 | **731592** |
| 17003117 | **816666** |
| 17004189 | **817884** |
| 17004252 | **817879** |
| 17004267 | **817881** |
| 17004274 | **818725** |
| 17004280 | **817882** |
| 17004309 | **818726** |
| 17004319 | **818823** |
| 18002004 | **730842** |

| IAM | Valeo |
|---|---|
| **INTERNATIONAL RADIATORS** | |
| 18002006 | **811046** |
| 18002008 | **883954** |
| 18002012 | **730110** |
| 18002035 | **730114** |
| 18002038 | **819320** |
| 18002044 | **883956** |
| 18002076 | **734774** |
| 18002085 | **730124** |
| 18002102 | **730123** |
| 18002112 | **730563** |
| 18002117 | **730483** |
| 18002120 | **730594** |
| 18002122 | **730566** |
| 18002123 | **730590** |
| 18002139 | **730968** |
| 18002151 | **730856** |
| 18002165 | **731550** |
| 18002166 | **730124** |
| 18002168 | **731492** |
| 18002185 | **731257** |
| 18002196 | **731257** |
| 18002198 | **730559** |
| 18002201 | **731781** |
| 18002202 | **734862** |
| 18002203 | **731779** |
| 18002204 | **731782** |
| 18002217 | **731735** |
| 18002218 | **731734** |
| 18002219 | **731736** |
| 18002220 | **731617** |
| 18002224 | **732003** |
| 18002226 | **731724** |
| 18002257 | **731992** |
| 18002260 | **734772** |
| 18002261 | **732497** |
| 18002263 | **732731** |
| 18002264 | **732732** |
| 18002265 | **732735** |
| 18002318 | **734292** |
| 18002319 | **734293** |
| 18002320 | **734291** |
| 18002324 | **734272** |
| 18002325 | **734273** |
| 18002326 | **734274** |
| 18002335 | **734286** |
| 18002336 | **734287** |
| 18002337 | **734696** |
| 18002368 | **734319** |
| 18002369 | **734320** |
| 18002370 | **734321** |
| 18002373 | **734392** |
| 18002376 | **734699** |
| 18002379 | **735046** |
| 18002397 | **732624** |
| 18002398 | **732626** |
| 18002399 | **732625** |
| 18004313 | **817888** |
| 18004315 | **817891** |
| 18004341 | **817238** |
| 18004366 | **818717** |
| 21002001 | **732552** |
| 21002016 | **732312** |
| 25002003 | **730411** |
| 25002011 | **731101** |
| 25002016 | **732323** |
| 25002017 | **731100** |
| 25002018 | **730168** |
| 25002020 | **731434** |
| 25002021 | **731434** |
| 25002021 | **731458** |
| 25002031 | **731434** |
| 25002032 | **730316** |
| 25002036 | **730591** |
| 25002037 | **730970** |
| 25002039 | **734111** |
| 25002040 | **730423** |
| 25002041 | **730424** |
| 25002042 | **731634** |

| IAM | Valeo |
|---|---|
| **INTERNATIONAL RADIATORS** | |
| 25002043 | **731635** |
| 25002045 | **730417** |
| 25002047 | **819193** |
| 25002048 | **819193** |
| 25002048 | **730316** |
| 25002050 | **731634** |
| 25002051 | **731635** |
| 25002053 | **730424** |
| 25002055 | **730430** |
| 25002056 | **730429** |
| 25002058 | **731467** |
| 25002059 | **734111** |
| 25002063 | **730429** |
| 25002064 | **730417** |
| 25002067 | **731434** |
| 25002068 | **731473** |
| 25002069 | **731459** |
| 25002071 | **734109** |
| 25002072 | **734623** |
| 25002073 | **731630** |
| 25002074 | **731629** |
| 25002075 | **731469** |
| 25002076 | **731474** |
| 25002078 | **734624** |
| 25002080 | **731434** |
| 25002094 | **734747** |
| 25002100 | **734113** |
| 25002102 | **734114** |
| 25002104 | **734110** |
| 25002110 | **734112** |
| 25002118 | **734716** |
| 25002119 | **734717** |
| 25002120 | **731434** |
| 25002121 | **731469** |
| 25002121 | **731434** |
| 25002122 | **731434** |
| 25002122 | **731458** |
| 25002123 | **731459** |
| 25002123 | **731474** |
| 25002162 | **734476** |
| 25002163 | **734477** |
| 25002166 | **734478** |
| 25002170 | **734703** |
| 25002177 | **735050** |
| 25002178 | **734218** |
| 25002179 | **735049** |
| 27002023 | **730436** |
| 27002024 | **731142** |
| 27002027 | **731073** |
| 27002028 | **730435** |
| 27002030 | **731142** |
| 27002037 | **731372** |
| 27002042 | **731042** |
| 27002048 | **730440** |
| 27002050 | **732538** |
| 27002064 | **730437** |
| 27002066 | **731461** |
| 27002068 | **732326** |
| 27002069 | **732475** |
| 27002069 | **734121** |
| 27002070 | **731036** |
| 27002071 | **732326** |
| 27002073 | **731466** |
| 27002074 | **731472** |
| 27002075 | **734627** |
| 27002083 | **730435** |
| 27002087 | **731437** |
| 27002090 | **731072** |
| 27002091 | **732475** |
| 27002096 | **734581** |
| 27002098 | **734120** |
| 27002100 | **732345** |
| 27002100 | **734195** |
| 27002116 | **732345** |
| 27002117 | **731417** |
| 27002134 | **734119** |
| 27002138 | **734119** |
| 27002139 | **732726** |

| IAM | Valeo |
|---|---|
| **INTERNATIONAL RADIATORS** | |
| 27002146 | **732346** |
| 27002151 | **734123** |
| 27002152 | **734124** |
| 27002153 | **734122** |
| 27002160 | **735053** |
| 27002161 | **734483** |
| 27002162 | **734484** |
| 27002164 | **734410** |
| 27002167 | **734126** |
| 27002168 | **735240** |
| 27002178 | **734121** |
| 27002190 | **734118** |
| 27002191 | **734207** |
| 28002020 | **816646** |
| 28002022 | **816649** |
| 28002023 | **816647** |
| 28002024 | **816647** |
| 28002035 | **731572** |
| 28002043 | **734231** |
| 28002056 | **734449** |
| 28002057 | **734448** |
| 28002061 | **731572** |
| 28002062 | **816647** |
| 28004021 | **817941** |
| 28004045 | **818724** |
| 30002039 | **810869** |
| 30002039 | **819368** |
| 30002041 | **819379** |
| 30002064 | **819368** |
| 30002065 | **819373** |
| 30002066 | **819201** |
| 30002067 | **883860** |
| 30002068 | **819387** |
| 30002072 | **819377** |
| 30002080 | **819383** |
| 30002085 | **730883** |
| 30002085 | **731741** |
| 30002086 | **732741** |
| 30002096 | **819384** |
| 30002100 | **730344** |
| 30002110 | **819376** |
| 30002120 | **732454** |
| 30002126 | **732460** |
| 30002127 | **732442** |
| 30002128 | **730344** |
| 30002129 | **734795** |
| 30002131 | **734794** |
| 30002132 | **734793** |
| 30002144 | **732447** |
| 30002145 | **734798** |
| 30002147 | **731805** |
| 30002147 | **731808** |
| 30002148 | **732460** |
| 30002150 | **731804** |
| 30002151 | **734631** |
| 30002154 | **732458** |
| 30002156 | **731807** |
| 30002163 | **819379** |
| 30002174 | **731805** |
| 30002175 | **730344** |
| 30002177 | **732605** |
| 30002181 | **730229** |
| 30002182 | **732472** |
| 30002189 | **731294** |
| 30002190 | **731292** |
| 30002191 | **731293** |
| 30002192 | **731291** |
| 30002208 | **732446** |
| 30002209 | **735231** |
| 30002211 | **883876** |
| 30002212 | **732450** |
| 30002213 | **734674** |
| 30002214 | **731294** |
| 30002216 | **732471** |
| 30002228 | **732462** |
| 30002229 | **732451** |
| 30002236 | **819387** |
| 30002237 | **734799** |

| IAM | Valeo |
|---|---|
| **INTERNATIONAL RADIATORS** | |
| 30002243 | **734806** |
| 30002264 | **734749** |
| 30002265 | **734668** |
| 30002271 | **732315** |
| 30002286 | **732741** |
| 30002287 | **734803** |
| 30002300 | **734689** |
| 30002301 | **734801** |
| 30002304 | **734796** |
| 30002308 | **734802** |
| 30002309 | **735234** |
| 30002311 | **735230** |
| 30002331 | **732736** |
| 30002332 | **732706** |
| 30002335 | **734807** |
| 30002336 | **734669** |
| 30002339 | **732743** |
| 30002342 | **734805** |
| 30002343 | **734875** |
| 30002348 | **734876** |
| 30002349 | **734877** |
| 30002350 | **734878** |
| 30004217 | **816890** |
| 30004224 | **817905** |
| 30004261 | **817759** |
| 30004285 | **817903** |
| 30004296 | **817907** |
| 30004297 | **817760** |
| 30004315 | **817911** |
| 32002003 | **730446** |
| 32002007 | **730449** |
| 32002009 | **730446** |
| 32002027 | **730454** |
| 32002030 | **731642** |
| 32002034 | **819119** |
| 32002036 | **731647** |
| 32002042 | **731056** |
| 32002046 | **731054** |
| 32002049 | **730454** |
| 32002050 | **730454** |
| 32002064 | **732327** |
| 32002064 | **732539** |
| 32002068 | **731646** |
| 32002077 | **731451** |
| 32002078 | **731649** |
| 32002080 | **731462** |
| 32002081 | **734136** |
| 32002082 | **731639** |
| 32002083 | **731638** |
| 32002084 | **731641** |
| 32002085 | **731640** |
| 32002087 | **732539** |
| 32002087 | **734132** |
| 32002089 | **734809** |
| 32002091 | **731650** |
| 32002110 | **734145** |
| 32002111 | **732524** |
| 32002112 | **734480** |
| 32002113 | **732613** |
| 32002114 | **732613** |
| 32002116 | **732525** |
| 32002117 | **734128** |
| 32002122 | **734129** |
| 32002123 | **734129** |
| 32002127 | **734137** |
| 32002128 | **731462** |
| 32002129 | **734138** |
| 32002129 | **734139** |
| 32002134 | **734141** |
| 32002135 | **734141** |
| 32002138 | **732748** |
| 32002142 | **732524** |
| 32002143 | **734142** |
| 32002147 | **732540** |
| 32002148 | **734127** |
| 32002156 | **734143** |
| 32002157 | **734144** |
| 32002157 | **734424** |

| IAM | Valeo |
|---|---|
| **INTERNATIONAL RADIATORS** | |
| 32002158 | **734146** |
| 32002159 | **734145** |
| 32002163 | **735058** |
| 32002164 | **735060** |
| 32002167 | **734424** |
| 32002169 | **734198** |
| 32002170 | **735059** |
| 32002171 | **734196** |
| 32002182 | **732748** |
| 37002023 | **730975** |
| 37002028 | **730993** |
| 37002029 | **730994** |
| 37002030 | **730152** |
| 37002048 | **883751** |
| 37002050 | **883751** |
| 37002053 | **883767** |
| 37002054 | **883771** |
| 37002063 | **883857** |
| 37002064 | **883858** |
| 37002065 | **883859** |
| 37002066 | **730125** |
| 37002068 | **883856** |
| 37002074 | **883920** |
| 37002091 | **730993** |
| 37002092 | **883751** |
| 37002106 | **819388** |
| 37002107 | **819389** |
| 37002117 | **883878** |
| 37002119 | **730396** |
| 37002120 | **730395** |
| 37002122 | **731217** |
| 37002127 | **731022** |
| 37002150 | **883880** |
| 37002155 | **883920** |
| 37002161 | **883877** |
| 37002163 | **883881** |
| 37002168 | **731170** |
| 37002169 | **734429** |
| 37002173 | **731174** |
| 37002173 | **731175** |
| 37002174 | **734644** |
| 37002175 | **735229** |
| 37002179 | **734821** |
| 37002183 | **731013** |
| 37002184 | **731178** |
| 37002185 | **731179** |
| 37002186 | **734604** |
| 37002187 | **734604** |
| 37002188 | **731237** |
| 37002190 | **731174** |
| 37002190 | **731175** |
| 37002191 | **730994** |
| 37002198 | **731842** |
| 37002199 | **731843** |
| 37002200 | **734271** |
| 37002201 | **731839** |
| 37002202 | **731840** |
| 37002203 | **732032** |
| 37002207 | **731421** |
| 37002213 | **731236** |
| 37002214 | **731237** |
| 37002219 | **731393** |
| 37002220 | **731847** |
| 37002220 | **732347** |
| 37002221 | **731846** |
| 37002222 | **731848** |
| 37002222 | **732348** |
| 37002242 | **731525** |
| 37002244 | **732347** |
| 37002245 | **731839** |
| 37002246 | **731842** |
| 37002248 | **731840** |
| 37002248 | **735065** |
| 37002249 | **734389** |
| 37002252 | **732550** |
| 37002253 | **732548** |
| 37002254 | **732549** |
| 37002255 | **732551** |

| IAM | Valeo |
|---|---|
| **INTERNATIONAL RADIATORS** | |
| 37002256 | **732724** |
| 37002257 | **732723** |
| 37002261 | **732606** |
| 37002263 | **732607** |
| 37002266 | **734242** |
| 37002272 | **732724** |
| 37002275 | **732349** |
| 37002293 | **732550** |
| 37002294 | **734322** |
| 37002296 | **732795** |
| 37002303 | **732825** |
| 37002305 | **732824** |
| 37002306 | **732826** |
| 37002329 | **734388** |
| 37002330 | **732694** |
| 37002337 | **734353** |
| 37002338 | **732879** |
| 37002339 | **732876** |
| 37002340 | **732877** |
| 37002341 | **732878** |
| 37002345 | **734384** |
| 37002346 | **734386** |
| 37002348 | **734385** |
| 37002362 | **734381** |
| 37002363 | **734382** |
| 37002364 | **734380** |
| 37002365 | **734383** |
| 37002380 | **734464** |
| 37002381 | **734432** |
| 37002382 | **734331** |
| 37002387 | **734339** |
| 37002388 | **734345** |
| 37002395 | **734302** |
| 37002396 | **734339** |
| 37002408 | **735097** |
| 37004269 | **817917** |
| 37004322 | **818728** |
| 37004325 | **817916** |
| 37004360 | **817697** |
| 37004361 | **817729** |
| 37004374 | **818759** |
| 37004401 | **818701** |
| 37004404 | **818809** |
| 40002004 | **730569** |
| 40002012 | **730372** |
| 40002014 | **730368** |
| 40002014 | **730515** |
| 40002021 | **810881** |
| 40002033 | **883765** |
| 40002042 | **730898** |
| 40002068 | **730506** |
| 40002073 | **816700** |
| 40002079 | **730015** |
| 40002080 | **730015** |
| 40002081 | **811380** |
| 40002085 | **810827** |
| 40002092 | **810915** |
| 40002096 | **730534** |
| 40002097 | **810919** |
| 40002098 | **730634** |
| 40002099 | **730018** |
| 40002105 | **730015** |
| 40002109 | **730018** |
| 40002110 | **730015** |
| 40002111 | **730634** |
| 40002112 | **730040** |
| 40002116 | **816555** |
| 40002121 | **730512** |
| 40002124 | **730572** |
| 40002125 | **730575** |
| 40002126 | **730577** |
| 40002127 | **730575** |
| 40002131 | **730953** |
| 40002132 | **730974** |
| 40002133 | **730974** |
| 40002135 | **730575** |
| 40002136 | **730927** |
| 40002137 | **730630** |

| IAM | Valeo |
|---|---|
| **INTERNATIONAL RADIATORS** | |
| 40002140 | **730983** |
| 40002141 | **730985** |
| 40002142 | **730984** |
| 40002146 | **731611** |
| 40002147 | **730995** |
| 40002148 | **731010** |
| 40002149 | **731186** |
| 40002150 | **730997** |
| 40002151 | **730999** |
| 40002176 | **731584** |
| 40002177 | **731586** |
| 40002179 | **731575** |
| 40002181 | **731574** |
| 40002188 | **732885** |
| 40002189 | **732886** |
| 40002190 | **732904** |
| 40002190 | **732910** |
| 40002196 | **732567** |
| 40002198 | **732598** |
| 40002200 | **732599** |
| 40002202 | **734280** |
| 40002205 | **732910** |
| 40002208 | **734278** |
| 40002210 | **732906** |
| 40002211 | **732892** |
| 40002216 | **732794** |
| 40002217 | **734282** |
| 40002219 | **732891** |
| 40002220 | **732894** |
| 40002222 | **732890** |
| 40002222 | **732908** |
| 40002223 | **732893** |
| 40002223 | **732895** |
| 40002229 | **734336** |
| 40002230 | **732492** |
| 40002231 | **734411** |
| 40002234 | **734281** |
| 40002235 | **734279** |
| 40002236 | **732892** |
| 40002236 | **732895** |
| 40002237 | **732830** |
| 40002238 | **732895** |
| 40002239 | **732893** |
| 40002241 | **732896** |
| 40002243 | **732885** |
| 40002244 | **732886** |
| 40002245 | **732904** |
| 40002246 | **732910** |
| 40002247 | **732906** |
| 40002248 | **732910** |
| 40002249 | **732894** |
| 40002251 | **732890** |
| 40002252 | **732891** |
| 40002255 | **734338** |
| 40002256 | **734452** |
| 40002260 | **734346** |
| 40002262 | **732882** |
| 40002265 | **734366** |
| 40002266 | **734423** |
| 40002267 | **734338** |
| 40002269 | **734463** |
| 40002274 | **732880** |
| 40002275 | **732944** |
| 40002276 | **732945** |
| 40002277 | **732881** |
| 40003271 | **817705** |
| 40003285 | **817704** |
| 40004183 | **817632** |
| 40004204 | **817437** |
| 40004261 | **817650** |
| 40004273 | **817578** |
| 40004279 | **817920** |
| 43002001 | **883463** |
| 43002005 | **730510** |
| 43002009 | **883282** |
| 43002010 | **810933** |
| 43002016 | **810927** |
| 43002017 | **883959** |

| IAM | Valeo |
|---|---|
| **INTERNATIONAL RADIATORS** | |
| 43002022 | **810843** |
| 43002025 | **810835** |
| 43002041 | **816655** |
| 43002042 | **816657** |
| 43002043 | **883875** |
| 43002045 | **730180** |
| 43002052 | **810889** |
| 43002053 | **810912** |
| 43002054 | **730510** |
| 43002063 | **883852** |
| 43002063 | **883959** |
| 43002065 | **883851** |
| 43002070 | **810851** |
| 43002071 | **810926** |
| 43002077 | **810938** |
| 43002078 | **810887** |
| 43002078 | **810938** |
| 43002084 | **730140** |
| 43002105 | **810888** |
| 43002107 | **730940** |
| 43002109 | **730055** |
| 43002115 | **816552** |
| 43002118 | **816658** |
| 43002119 | **810995** |
| 43002120 | **816654** |
| 43002121 | **816656** |
| 43002125 | **730511** |
| 43002126 | **730973** |
| 43002128 | **730183** |
| 43002129 | **730181** |
| 43002130 | **730182** |
| 43002131 | **819431** |
| 43002132 | **816655** |
| 43002132 | **730499** |
| 43002134 | **730185** |
| 43002135 | **730540** |
| 43002140 | **730548** |
| 43002141 | **730549** |
| 43002149 | **730551** |
| 43002150 | **730184** |
| 43002155 | **730944** |
| 43002158 | **730633** |
| 43002159 | **730502** |
| 43002164 | **731128** |
| 43002165 | **731161** |
| 43002166 | **731161** |
| 43002167 | **730969** |
| 43002174 | **732072** |
| 43002197 | **731378** |
| 43002198 | **731379** |
| 43002199 | **731380** |
| 43002203 | **731538** |
| 43002206 | **731552** |
| 43002208 | **731129** |
| 43002209 | **731529** |
| 43002215 | **731910** |
| 43002217 | **732051** |
| 43002218 | **731378** |
| 43002231 | **732474** |
| 43002233 | **734284** |
| 43002239 | **732608** |
| 43002240 | **734285** |
| 43002241 | **732316** |
| 43002257 | **732049** |
| 43002258 | **732071** |
| 43002259 | **732544** |
| 43002260 | **732338** |
| 43002261 | **732338** |
| 43002262 | **732819** |
| 43002263 | **732050** |
| 43002266 | **732559** |
| 43002267 | **732387** |
| 43002268 | **732387** |
| 43002269 | **732621** |
| 43002270 | **732721** |
| 43002271 | **732389** |
| 43002272 | **732523** |
| 43002274 | **732940** |

| IAM | Valeo |
|---|---|
| **INTERNATIONAL RADIATORS** | |
| 43002276 | **732798** |
| 43002290 | **732827** |
| 43002292 | **732828** |
| 43002293 | **734828** |
| 43002300 | **734728** |
| 43002302 | **732761** |
| 43002303 | **732853** |
| 43002306 | **732873** |
| 43002307 | **732874** |
| 43002308 | **732946** |
| 43002309 | **732717** |
| 43002312 | **732817** |
| 43002313 | **732902** |
| 43002322 | **732918** |
| 43002325 | **732687** |
| 43002326 | **732737** |
| 43002327 | **732846** |
| 43002360 | **732911** |
| 43002362 | **732960** |
| 43003146 | **816748** |
| 43004089 | **817115** |
| 43004148 | **816755** |
| 43004212 | **816836** |
| 43004277 | **817924** |
| 43004295 | **817926** |
| 43004296 | **817925** |
| 43004316 | **818727** |
| 43004320 | **817923** |
| 43004328 | **817554** |
| 43004346 | **818820** |
| 43004351 | **817654** |
| 43004358 | **817636** |
| 43004359 | **817637** |
| 47002005 | **732108** |
| 47002008 | **732123** |
| 47002010 | **810965** |
| 47002020 | **810965** |
| 47002026 | **732120** |
| 47002027 | **732121** |
| 47002028 | **732122** |
| 47002035 | **734714** |
| 47002036 | **734830** |
| 47002037 | **734831** |
| 47002046 | **732110** |
| 47002050 | **732108** |
| 47002055 | **734831** |
| 47004047 | **817275** |
| 49002004 | **883921** |
| 49002005 | **883958** |
| 49002008 | **730542** |
| 49002009 | **730370** |
| 49002011 | **883053** |
| 49002019 | **730947** |
| 49002020 | **731271** |
| 49002021 | **731266** |
| 49002021 | **730945** |
| 49002022 | **730946** |
| 49002023 | **730946** |
| 49002023 | **730947** |
| 49002024 | **730948** |
| 49002027 | **883727** |
| 49002028 | **731269** |
| 49002030 | **730947** |
| 49002030 | **731270** |
| 49002031 | **731268** |
| 49002033 | **883727** |
| 49002035 | **732317** |
| 51002005 | **731456** |
| 51002007 | **731153** |
| 51002008 | **730455** |
| 51002010 | **731438** |
| 51002011 | **731456** |
| 51002016 | **734577** |
| 51002018 | **731675** |
| 51002022 | **731678** |
| 51002035 | **734211** |
| 51002036 | **734212** |
| 51002037 | **734158** |

| IAM | Valeo |
|---|---|
| **INTERNATIONAL RADIATORS** | |
| 51002045 | **732410** |
| 51002046 | **734577** |
| 51002048 | **734405** |
| 51002052 | **735211** |
| 51002053 | **734465** |
| 52002003 | **730457** |
| 52002006 | **730456** |
| 52002009 | **734159** |
| 52002022 | **731828** |
| 52002034 | **732750** |
| 52002035 | **732750** |
| 52002036 | **734919** |
| 52002041 | **734835** |
| 52002046 | **734213** |
| 52002050 | **734835** |
| 52002055 | **734170** |
| 52002057 | **734917** |
| 52002058 | **734486** |
| 52002061 | **734171** |
| 52002062 | **734164** |
| 52002063 | **734165** |
| 52002064 | **732719** |
| 52002065 | **735074** |
| 52002070 | **735073** |
| 52002071 | **731463** |
| 52002073 | **734161** |
| 52002074 | **734918** |
| 52002077 | **734214** |
| 52002079 | **734162** |
| 53002011 | **731199** |
| 53002012 | **730466** |
| 53002014 | **731196** |
| 53002023 | **730466** |
| 53002030 | **731095** |
| 53002033 | **731692** |
| 53002034 | **819123** |
| 53002036 | **730470** |
| 53002038 | **731124** |
| 53002040 | **731135** |
| 53002044 | **730468** |
| 53002048 | **730469** |
| 53002052 | **731135** |
| 53002061 | **732561** |
| 53002065 | **731135** |
| 53002069 | **730465** |
| 53002080 | **731095** |
| 53002080 | **731698** |
| 53002088 | **731122** |
| 53002093 | **731716** |
| 53002099 | **731115** |
| 53002100 | **731114** |
| 53002107 | **731717** |
| 53002111 | **731098** |
| 53002112 | **731097** |
| 53002115 | **731119** |
| 53002116 | **730472** |
| 53002117 | **730471** |
| 53002123 | **731105** |
| 53002124 | **731106** |
| 53002140 | **731441** |
| 53002140 | **732614** |
| 53002141 | **731565** |
| 53002142 | **731696** |
| 53002143 | **731694** |
| 53002144 | **734181** |
| 53002145 | **731569** |
| 53002146 | **734839** |
| 53002147 | **731441** |
| 53002148 | **731464** |
| 53002151 | **731713** |
| 53002154 | **731715** |
| 53002158 | **731135** |
| 53002160 | **731833** |
| 53002163 | **731831** |
| 53002181 | **731568** |
| 53002185 | **732476** |
| 53002187 | **731684** |
| 53002200 | **732542** |

| IAM | Valeo |
|---|---|
| **INTERNATIONAL RADIATORS** | |
| 53002201 | **731830** |
| 53002204 | **731685** |
| 53002204 | **731441** |
| 53002205 | **731682** |
| 53002206 | **731110** |
| 53002208 | **731688** |
| 53002219 | **734172** |
| 53002220 | **734466** |
| 53002227 | **732543** |
| 53002231 | **734176** |
| 53002232 | **734177** |
| 53002235 | **734488** |
| 53002236 | **734489** |
| 53002237 | **732950** |
| 53002238 | **732753** |
| 53002239 | **732951** |
| 53002240 | **732754** |
| 53002241 | **732420** |
| 53002242 | **732420** |
| 53002248 | **734205** |
| 53002249 | **734206** |
| 53002251 | **732421** |
| 53002255 | **734850** |
| 53002258 | **734840** |
| 53002259 | **734841** |
| 53002282 | **735214** |
| 53002283 | **734401** |
| 53002284 | **734490** |
| 53002285 | **734491** |
| 53002289 | **734199** |
| 53002290 | **734200** |
| 53002291 | **734845** |
| 53002295 | **732413** |
| 53002299 | **734182** |
| 53002301 | **734183** |
| 53002306 | **734493** |
| 53002317 | **734842** |
| 53002318 | **734916** |
| 53002323 | **734711** |
| 53002324 | **735075** |
| 53002330 | **732420** |
| 53002332 | **734712** |
| 53002334 | **732417** |
| 53002336 | **734201** |
| 53002344 | **734173** |
| 53002346 | **734175** |
| 53002347 | **734174** |
| 53002348 | **734397** |
| 53002350 | **731441** |
| 53002359 | **735070** |
| 53002360 | **735069** |
| 53002377 | **734189** |
| 53004365 | **817698** |
| 58002009 | **883718** |
| 58002011 | **883720** |
| 58002018 | **730485** |
| 58002027 | **730955** |
| 58002028 | **730503** |
| 58002028 | **730504** |
| 58002029 | **730504** |
| 58002034 | **732435** |
| 58002035 | **883864** |
| 58002038 | **883818** |
| 58002039 | **883819** |
| 58002041 | **883849** |
| 58002042 | **734586** |
| 58002045 | **883727** |
| 58002047 | **883820** |
| 58002059 | **883905** |
| 58002066 | **730629** |
| 58002070 | **883869** |
| 58002071 | **883870** |
| 58002072 | **883871** |
| 58002078 | **732438** |
| 58002079 | **732436** |
| 58002080 | **730485** |
| 58002083 | **731401** |
| 58002088 | **734515** |

| IAM | Valeo |
|---|---|
| **INTERNATIONAL RADIATORS** | |
| 58002091 | **734606** |
| 58002092 | **816703** |
| 58002094 | **731411** |
| 58002099 | **730505** |
| 58002102 | **732437** |
| 58002103 | **730971** |
| 58002104 | **731127** |
| 58002105 | **731032** |
| 58002109 | **731025** |
| 58002111 | **734415** |
| 58002114 | **732397** |
| 58002114 | **732845** |
| 58002115 | **731267** |
| 58002115 | **731268** |
| 58002116 | **731265** |
| 58002119 | **731005** |
| 58002120 | **731007** |
| 58002121 | **731008** |
| 58002122 | **731006** |
| 58002124 | **731267** |
| 58002129 | **730956** |
| 58002130 | **730954** |
| 58002133 | **732797** |
| 58002134 | **731386** |
| 58002135 | **731387** |
| 58002149 | **731616** |
| 58002152 | **731607** |
| 58002155 | **731605** |
| 58002156 | **731728** |
| 58002184 | **732786** |
| 58002188 | **732790** |
| 58002191 | **732710** |
| 58002193 | **732867** |
| 58002198 | **734739** |
| 58002199 | **734740** |
| 58002204 | **734332** |
| 58002205 | **734335** |
| 58002206 | **732872** |
| 58002208 | **734333** |
| 58002214 | **734741** |
| 58002217 | **732427** |
| 58002223 | **734335** |
| 58002245 | **732177** |
| 58002249 | **732953** |
| 58002250 | **732952** |
| 58003106 | **817943** |
| 58004127 | **817764** |
| 58004136 | **817766** |
| 58004154 | **817937** |
| 58004157 | **817936** |
| 58004159 | **817765** |
| 58004162 | **817767** |
| 58004163 | **817764** |
| 58004194 | **817486** |
| 58004200 | **817457** |
| 58004213 | **817556** |
| 58004216 | **818720** |
| 58004219 | **817555** |
| 58004221 | **818827** |
| 58004222 | **818828** |
| 58004227 | **818795** |
| 58004246 | **817372** |
| 58004253 | **817634** |
| 58004254 | **817635** |
| 59002015 | **732372** |
| 59002092 | **732365** |
| 59002117 | **734720** |
| 59002118 | **734856** |
| 59002124 | **734320** |
| 73002002 | **883809** |
| 73002018 | **811381** |
| 73002025 | **811056** |
| 73002033 | **810984** |
| 73002036 | **730319** |
| 73002048 | **816707** |
| 73002050 | **730838** |
| 73002053 | **731282** |
| 73002054 | **731276** |

| IAM | Valeo |
|---|---|
| **INTERNATIONAL RADIATORS** | |
| 73002056 | **731281** |
| 73002059 | **731278** |
| 73002066 | **731375** |
| 73002072 | **731980** |
| 73002076 | **732580** |
| 73002077 | **732582** |
| 73002079 | **732582** |
| 73002079 | **732584** |
| 73002081 | **734237** |
| 73002082 | **734236** |
| 73002083 | **734238** |
| 73002084 | **734235** |
| 73004085 | **817901** |
| 73004087 | **817899** |
| 74002004 | **810952** |
| 74002023 | **734826** |
| 74002037 | **734827** |
| 76002002 | **730375** |
| 76002003 | **732479** |
| 76002005 | **732863** |
| 76002006 | **732862** |
| 76002006 | **732864** |
| 76002008 | **732864** |
| 76002010 | **732862** |
| 76002014 | **732864** |
| 77002037 | **734785** |
| 81002001 | **732483** |
| 81002002 | **734596** |
| 81002003 | **734596** |
| 81002004 | **734766** |
| 81002005 | **734761** |
| 81002007 | **734250** |
| 81002009 | **734252** |
| 81002010 | **734765** |
| 81002014 | **734248** |
| 81002015 | **734249** |
| 81002016 | **734767** |
| 81002017 | **734764** |
| 81002046 | **734251** |
| 81002052 | **734762** |
| 81002053 | **735266** |
| 81002066 | **735157** |
| 81002067 | **735158** |
| 82002005 | **734267** |
| 82002006 | **731454** |
| 82002022 | **734256** |
| 82002029 | **734587** |
| 82002031 | **734256** |
| 82002033 | **734261** |
| 82002043 | **734950** |
| 82002044 | **734258** |
| 82002047 | **732488** |
| 82002049 | **734408** |
| 82002051 | **734255** |
| 82002052 | **734254** |
| 82002053 | **734408** |
| 82002056 | **732487** |
| 82002085 | **734266** |
| 82002086 | **734253** |
| 82002095 | **734903** |
| 82002105 | **734965** |
| 82002107 | **734949** |
| 82002108 | **734784** |
| 82002109 | **734259** |
| 82002110 | **734909** |
| 82002113 | **734905** |
| 82002114 | **734908** |
| 82002148 | **734408** |
| 83002001 | **735079** |
| **MAGNETI MARELLI** | |
| 69402281010 | **698179** |
| 69402282010 | **698178** |
| 69402332010 | **696095** |
| 69402340010 | **696095** |
| 69422004010 | **696098** |
| 69422006010 | **696098** |
| 69422015010 | **696098** |

| IAM | Valeo |
|---|---|
| **MAGNETI MARELLI** | |
| 69422022010 | **696197** |
| 69422037010 | **696197** |
| 69422044010 | **696104** |
| 69422049010 | **696106** |
| 69422204010 | **696100** |
| 69422205010 | **696100** |
| 69422217010 | **698004** |
| 69422242010 | **696109** |
| 69422243010 | **696111** |
| 69422273010 | **696119** |
| 69422303010 | **696109** |
| 69422305010 | **696159** |
| 69422307010 | **696150** |
| 69422307010 | **696152** |
| 69422308010 | **696276** |
| 69422317010 | **696149** |
| 69422329010 | **698552** |
| 69422346010 | **698015** |
| 69422391010 | **696109** |
| **NISSENS** | |
| 50104 | **730590** |
| 60018 | **816710** |
| 60024 | **811071** |
| 60029 | **731251** |
| 60030 | **731591** |
| 60032 | **816710** |
| 60033 | **731283** |
| 60034 | **731559** |
| 60035 | **731561** |
| 60035 | **731591** |
| 60038 | **732012** |
| 60038 | **732011** |
| 60041 | **732013** |
| 60044 | **732248** |
| 60045 | **731283** |
| 60049 | **732012** |
| 60050 | **811389** |
| 60051 | **811068** |
| 60052 | **732854** |
| 60053 | **732696** |
| 60054 | **732505** |
| 60056 | **732722** |
| 60058 | **734733** |
| 60059 | **734283** |
| 60061 | **735021** |
| 60228A | **731757** |
| 60229A | **731755** |
| 60299A | **732361** |
| 60300A | **735093** |
| 60301 | **734418** |
| 60301A | **734418** |
| 60302A | **734268** |
| 60303A | **734270** |
| 60304A | **732963** |
| 60305A | **734269** |
| 60306A | **734419** |
| 60307A | **734269** |
| 60308 | **732811** |
| 60308A | **731537** |
| 60308A | **732361** |
| 60330 | **883863** |
| 60422A | **734752** |
| 60423 | **734753** |
| 60424 | **734859** |
| 60425 | **733074** |
| 60426 | **732785** |
| 60427 | **735033** |
| 60436 | **730349** |
| 60437 | **732440** |
| 60441 | **883863** |
| 60442 | **731505** |
| 60443 | **731760** |
| 60448 | **731428** |
| 60448A | **731428** |
| 60457 | **730361** |
| 60457A | **730361** |
| 60458 | **730362** |

| IAM | Valeo |
|---|---|
| **NISSENS** | |
| 60458A | **730362** |
| 60459A | **730363** |
| 60460 | **730360** |
| 60460A | **730360** |
| 60461 | **819259** |
| 60464 | **819260** |
| 60465A | **731422** |
| 60465 | **731422** |
| 60466A | **731503** |
| 60467 | **731429** |
| 60467A | **731429** |
| 60469A | **731430** |
| 60472 | **730349** |
| 60473A | **730360** |
| 60475A | **734751** |
| 60479 | **731501** |
| 60480 | **730362** |
| 60487A | **819260** |
| 60489A | **731537** |
| 60489A | **732361** |
| 60490 | **819259** |
| 60491A | **731537** |
| 60497A | **731756** |
| 60498A | **731757** |
| 60499A | **731755** |
| 60515 | **730119** |
| 60516 | **730595** |
| 60517 | **731243** |
| 60517 | **731215** |
| 60519 | **730172** |
| 60607A | **731725** |
| 60607A | **734301** |
| 60613A | **731512** |
| 60614A | **819413** |
| 60618A | **819422** |
| 60619A | **810947** |
| 60622A | **731523** |
| 60623A | **732198** |
| 60631 | **734614** |
| 60638 | **732199** |
| 60642A | **819415** |
| 60648A | **734277** |
| 60651 | **819422** |
| 60669 | **810947** |
| 60673 | **819422** |
| 60694A | **734421** |
| 60703A | **731520** |
| 60709 | **819413** |
| 60709A | **819413** |
| 60712 | **819415** |
| 60735A | **730365** |
| 60744 | **819414** |
| 60747A | **819418** |
| 60754A | **735233** |
| 60754A | **735223** |
| 60758 | **731514** |
| 60759A | **819422** |
| 60763 | **734897** |
| 60763 | **734898** |
| 60765 | **735034** |
| 60782 | **734276** |
| 60782A | **734276** |
| 60784A | **734276** |
| 60785A | **735165** |
| 60786A | **735166** |
| 60787A | **734894** |
| 60788A | **734895** |
| 60789A | **734896** |
| 60792 | **731514** |
| 60797 | **819397** |
| 60798A | **819415** |
| 60799A | **819414** |
| 60977 | **731148** |
| 60977A | **731148** |
| 60981 | **731579** |
| 60981A | **731579** |
| 60982 | **731579** |
| 60983 | **731578** |

| IAM | Valeo |
|---|---|
| **NISSENS** | |
| 60984 | **731723** |
| 60985 | **731531** |
| 60988 | **732552** |
| 60992 | **732780** |
| 60994 | **731749** |
| 60994 | **732426** |
| 61008 | **732312** |
| 61012 | **731749** |
| 61018A | **732956** |
| 61113A | **734345** |
| 61150 | **883774** |
| 61160 | **883773** |
| 61180 | **883686** |
| 61190 | **883715** |
| 61220 | **883464** |
| 61223 | **811380** |
| 61230 | **816554** |
| 61231 | **730934** |
| 61231 | **819428** |
| 61233 | **810836** |
| 61251 | **732534** |
| 61271 | **734452** |
| 61276 | **731527** |
| 61277 | **732930** |
| 61278 | **732930** |
| 61279 | **732831** |
| 61282 | **731611** |
| 61283 | **732881** |
| 61283A | **732881** |
| 61284 | **732831** |
| 61284 | **732930** |
| 61284 | **734921** |
| 61285 | **732830** |
| 61286 | **732692** |
| 61289 | **732890** |
| 61291 | **734278** |
| 61292 | **734279** |
| 61294 | **734280** |
| 61295 | **734282** |
| 61296 | **734336** |
| 61302 | **730982** |
| 61302A | **730982** |
| 61303 | **730958** |
| 61308 | **731185** |
| 61311 | **730507** |
| 61311 | **734454** |
| 61312 | **731180** |
| 61313 | **732535** |
| 61313A | **732535** |
| 61315 | **732517** |
| 61315A | **732517** |
| 61317 | **732520** |
| 61317A | **732520** |
| 61318A | **732520** |
| 61324 | **732518** |
| 61326A | **732518** |
| 61326A | **732565** |
| 61326A | **732577** |
| 61326A | **732620** |
| 61327 | **730984** |
| 61328 | **731181** |
| 61329 | **731176** |
| 61329A | **731176** |
| 61332 | **731391** |
| 61332A | **731391** |
| 61335A | **732534** |
| 61336A | **732909** |
| 61337 | **731173** |
| 61338A | **734455** |
| 61341 | **731389** |
| 61342 | **731391** |
| 61343 | **731180** |
| 61343A | **731180** |
| 61344 | **731584** |
| 61345 | **731584** |
| 61346A | **731530** |
| 61347A | **731527** |
| 61349A | **731289** |

| NISSENS | Valeo |
|---|---|
| 61351 | 810811 |
| 61352 | 730635 |
| 61353 | 730896 |
| 61354 | 883866 |
| 61357 | 730897 |
| 61358A | 731498 |
| 61363 | 810954 |
| 61364A | 732887 |
| 61367 | 816715 |
| 61368 | 816716 |
| 61369 | 730494 |
| 61370 | 730491 |
| 61372 | 730491 |
| 61373 | 816706 |
| 61374 | 961149 |
| 61377 | 730508 |
| 61379 | 731010 |
| 61379A | 731010 |
| 61380 | 730985 |
| 61381 | 730983 |
| 61382A | 730927 |
| 61383 | 731009 |
| 61384 | 730960 |
| 61385 | 730934 |
| 61386 | 732617 |
| 61387 | 730959 |
| 61388 | 730957 |
| 61390 | 731611 |
| 61390A | 731611 |
| 61391 | 730632 |
| 61393 | 730999 |
| 61395 | 731166 |
| 61396 | 731165 |
| 61397 | 731177 |
| 61398A | 731297 |
| 61399A | 731298 |
| 61590 | 819219 |
| 61633 | 735159 |
| 61636 | 735157 |
| 61640 | 735265 |
| 61645 | 735158 |
| 61646 | 734251 |
| 61650 | 734596 |
| 61651 | 732483 |
| 61651A | 732483 |
| 61652 | 734596 |
| 61652A | 734596 |
| 61653 | 734250 |
| 61654 | 734248 |
| 61655 | 734248 |
| 61657 | 734761 |
| 61658 | 734252 |
| 61659 | 734765 |
| 61661 | 734767 |
| 61662 | 734764 |
| 61664 | 734762 |
| 61665 | 735266 |
| 61666 | 734767 |
| 61667 | 734764 |
| 61671 | 731979 |
| 61672 | 731973 |
| 61673 | 731593 |
| 61681 | 883428 |
| 61683 | 732948 |
| 61690 | 883799 |
| 61691 | 816707 |
| 61738 | 734103 |
| 61739 | 735257 |
| 61740 | 734105 |
| 61747 | 731020 |
| 61748 | 731857 |
| 61749 | 731853 |
| 61754 | 730397 |
| 61764 | 732578 |
| 61764 | 734225 |
| 61765 | 734692 |
| 61766 | 735171 |
| 61767 | 735171 |

| NISSENS | Valeo |
|---|---|
| 61768 | 735172 |
| 61769 | 735172 |
| 61771 | 731611 |
| 61779 | 732218 |
| 61783 | 732004 |
| 61784 | 732812 |
| 61786 | 732557 |
| 61786A | 732557 |
| 61787 | 732787 |
| 61788 | 732788 |
| 61791 | 732623 |
| 61792A | 731974 |
| 61792A | 734220 |
| 61793 | 731972 |
| 61794 | 731981 |
| 61794A | 731981 |
| 61795 | 732688 |
| 61795A | 731972 |
| 61795A | 732688 |
| 61796 | 731977 |
| 61797 | 731975 |
| 61798 | 731976 |
| 61799 | 730980 |
| 61801 | 732006 |
| 61802 | 732005 |
| 61803 | 732007 |
| 61804 | 732147 |
| 61805 | 730519 |
| 61806 | 731306 |
| 61806A | 731303 |
| 61806A | 731306 |
| 61807 | 731302 |
| 61807 | 731303 |
| 61808 | 731304 |
| 61808 | 734239 |
| 61809 | 734239 |
| 61810 | 883053 |
| 61812 | 730981 |
| 61813 | 730309 |
| 61814 | 730309 |
| 61816 | 730838 |
| 61819 | 811387 |
| 61821 | 811073 |
| 61821 | 810949 |
| 61834 | 883813 |
| 61835 | 883827 |
| 61837 | 816707 |
| 61842 | 811071 |
| 61844 | 811070 |
| 61845 | 811069 |
| 61847 | 810949 |
| 61847 | 811073 |
| 61848 | 811387 |
| 61852 | 730991 |
| 61853 | 730990 |
| 61856 | 731562 |
| 61856 | 730976 |
| 61857 | 731562 |
| 61858 | 731562 |
| 61858 | 732705 |
| 61859 | 730980 |
| 61862 | 730995 |
| 61868 | 731592 |
| 61869 | 731592 |
| 61873 | 732685 |
| 61875 | 731168 |
| 61875A | 732692 |
| 61875A | 731166 |
| 61875A | 731168 |
| 61876A | 732503 |
| 61877 | 731593 |
| 61878 | 732787 |
| 61878A | 732787 |
| 61879A | 732787 |
| 61881 | 732851 |
| 61882 | 732913 |
| 61883A | 734228 |
| 61884A | 734228 |

| NISSENS | Valeo |
|---|---|
| 61885A | 734229 |
| 61886 | 732923 |
| 61887 | 734224 |
| 61888 | 734457 |
| 61889 | 734363 |
| 61892 | 734221 |
| 61895 | 734362 |
| 61896 | 734361 |
| 61897 | 732913 |
| 61898 | 734362 |
| 61899 | 732913 |
| 61899 | 734459 |
| 61910 | 883806 |
| 61911 | 732578 |
| 61914A | 734339 |
| 61915 | 735040 |
| 61915 | 735041 |
| 61916 | 735040 |
| 61916 | 735041 |
| 61917 | 735042 |
| 61918 | 735097 |
| 61920 | 883806 |
| 61929 | 811385 |
| 61929 | 811386 |
| 61930 | 730997 |
| 61930 | 731611 |
| 61930 | 883811 |
| 61931 | 811387 |
| 61931 | 883825 |
| 61940 | 883812 |
| 61940 | 883827 |
| 61950 | 883813 |
| 61972 | 731572 |
| 61977 | 730334 |
| 61978 | 734231 |
| 61979 | 734449 |
| 61981 | 734448 |
| 61983 | 734231 |
| 62003 | 734468 |
| 62005 | 734392 |
| 62013 | 731387 |
| 62015A | 735167 |
| 62017A | 734320 |
| 62017A | 734321 |
| 62018A | 734320 |
| 62021A | 735043 |
| 62023A | 734699 |
| 62025A | 734288 |
| 62026A | 734272 |
| 62027A | 734274 |
| 62028A | 734272 |
| 62028A | 734273 |
| 62028A | 734274 |
| 62041A | 734286 |
| 62043A | 734292 |
| 62044A | 734293 |
| 62046A | 734291 |
| 62047A | 730856 |
| 62052 | 735046 |
| 62053 | 731736 |
| 62055 | 732003 |
| 62056A | 734303 |
| 62069 | 732592 |
| 62070A | 731261 |
| 62073A | 732735 |
| 62074 | 732731 |
| 62074A | 732731 |
| 62075A | 732732 |
| 62076A | 730559 |
| 62080A | 732497 |
| 62081A | 731782 |
| 62082A | 731735 |
| 62083A | 731992 |
| 62083 | 731992 |
| 62084 | 731299 |
| 62085 | 731734 |
| 62085A | 731734 |
| 62086 | 731617 |

| NISSENS | Valeo |
|---|---|
| 62091 | 883956 |
| 62092 | 883954 |
| 62093 | 883956 |
| 62099 | 883954 |
| 62104 | 731550 |
| 62104A | 731011 |
| 62104A | 731550 |
| 62106 | 731550 |
| 62111 | 730116 |
| 62112 | 734319 |
| 62115 | 730631 |
| 62115 | 811046 |
| 62116 | 811047 |
| 62117 | 730484 |
| 62117A | 730484 |
| 62121 | 730483 |
| 62121A | 730483 |
| 62139 | 811046 |
| 62156A | 735043 |
| 62159 | 730117 |
| 62162 | 730857 |
| 62164 | 730858 |
| 62164A | 731300 |
| 62169 | 731595 |
| 62170 | 811046 |
| 62177 | 730124 |
| 62177A | 730124 |
| 62177A | 819176 |
| 62178 | 730123 |
| 62180 | 730842 |
| 62182 | 730589 |
| 62182 | 730590 |
| 62186 | 734774 |
| 62202 | 730114 |
| 62206 | 730590 |
| 62210 | 730114 |
| 62216A | 730631 |
| 62217 | 730856 |
| 62217A | 730856 |
| 62218 | 730968 |
| 62223 | 730968 |
| 62224 | 730566 |
| 62225 | 730594 |
| 62225 | 730566 |
| 62228 | 730563 |
| 62230 | 730110 |
| 62235 | 730589 |
| 62241 | 731779 |
| 62241A | 731779 |
| 62249 | 731492 |
| 62249A | 731492 |
| 62256 | 819193 |
| 62257 | 731634 |
| 62258 | 731471 |
| 62260 | 730411 |
| 62264 | 730316 |
| 62269 | 731634 |
| 62279 | 732323 |
| 62279A | 731076 |
| 62279A | 731471 |
| 62279 | 731076 |
| 62280 | 730168 |
| 62282A | 732323 |
| 62283 | 731100 |
| 62283 | 731101 |
| 62283A | 731101 |
| 62284 | 731100 |
| 62284A | 731100 |
| 62285 | 731434 |
| 62285A | 731434 |
| 62287 | 816647 |
| 62288 | 816647 |
| 62289 | 811348 |
| 62293 | 734256 |
| 62294 | 734267 |
| 62297 | 732488 |
| 62298 | 734950 |
| 62305 | 810984 |

| NISSENS | Valeo |
|---|---|
| 62310 | 883787 |
| 62312 | 811392 |
| 62313 | 883809 |
| 62315 | 811381 |
| 62324 | 731282 |
| 62325 | 731281 |
| 62326 | 731276 |
| 62327 | 732696 |
| 62327 | 731278 |
| 62328 | 730319 |
| 62330 | 819151 |
| 62332 | 731257 |
| 62340 | 819320 |
| 62351 | 730317 |
| 62368 | 819176 |
| 62369 | 730124 |
| 62369A | 730124 |
| 62369A | 819176 |
| 62383A | 734120 |
| 62384 | 735236 |
| 62384 | 732346 |
| 62384 | 732345 |
| 62385 | 734627 |
| 62391A | 732538 |
| 62393 | 731073 |
| 62403A | 734123 |
| 62403A | 734124 |
| 62404A | 734124 |
| 62405A | 730440 |
| 62405A | 732538 |
| 62406 | 730440 |
| 62406 | 732538 |
| 62407 | 734581 |
| 62408A | 732326 |
| 62409A | 731461 |
| 62412 | 731036 |
| 62418 | 731187 |
| 62423 | 730406 |
| 62425 | 730408 |
| 62427 | 731082 |
| 62435 | 734207 |
| 62436 | 734118 |
| 62442 | 731142 |
| 62444A | 731139 |
| 62455A | 732726 |
| 62456A | 734122 |
| 62459 | 732726 |
| 62462A | 735053 |
| 62463A | 734483 |
| 62464A | 734484 |
| 62466A | 734410 |
| 62467 | 734119 |
| 62482 | 731417 |
| 62484 | 732475 |
| 62487A | 731466 |
| 62505 | 731042 |
| 62505 | 735079 |
| 62508A | 734126 |
| 62509 | 730435 |
| 62512 | 730436 |
| 62519 | 734689 |
| 62519A | 734689 |
| 62521 | 883860 |
| 62526 | 819376 |
| 62533 | 732454 |
| 62547A | 735230 |
| 62547A | 735234 |
| 62549A | 883860 |
| 62549 | 883860 |
| 62550 | 819368 |
| 62551 | 810869 |
| 62551 | 819368 |
| 62557 | 819376 |
| 62558 | 734798 |
| 62559 | 734749 |
| 62561 | 734668 |
| 62562 | 734669 |
| 62573 | 734876 |

| NISSENS | Valeo |
|---|---|
| 62574 | 734878 |
| 62575 | 734877 |
| 62582 | 819384 |
| 62582A | 819384 |
| 62597 | 734875 |
| 62599 | 732459 |
| 62599A | 732459 |
| 62602 | 732090 |
| 62605 | 733432 |
| 62612 | 732462 |
| 62612A | 732462 |
| 62615 | 734796 |
| 62619 | 732315 |
| 62633 | 730883 |
| 62635 | 730883 |
| 62635 | 731741 |
| 62650 | 819201 |
| 62655 | 734806 |
| 62661 | 732587 |
| 62666 | 731292 |
| 62666A | 731292 |
| 62667 | 731291 |
| 62667A | 731291 |
| 62671 | 883876 |
| 62677 | 732471 |
| 62678 | 734674 |
| 62679 | 732458 |
| 62679A | 732458 |
| 62683 | 819377 |
| 62683A | 819377 |
| 62686 | 732472 |
| 62687 | 730229 |
| 62688 | 734799 |
| 62689A | 732446 |
| 62689 | 732446 |
| 62691 | 731294 |
| 62691A | 731294 |
| 62696 | 732591 |
| 62698 | 819387 |
| 62698A | 819387 |
| 62699 | 732591 |
| 62701 | 819377 |
| 62708 | 731804 |
| 62708A | 731804 |
| 62712 | 732451 |
| 62712A | 732451 |
| 62713 | 734793 |
| 62713A | 734793 |
| 62714 | 732447 |
| 62714A | 732447 |
| 62715 | 734794 |
| 62716 | 734795 |
| 62716A | 734794 |
| 62720 | 819387 |
| 62721A | 730344 |
| 62722 | 730344 |
| 62722A | 730344 |
| 62724 | 819379 |
| 62724A | 819379 |
| 62728 | 819383 |
| 62729 | 730344 |
| 62729A | 731471 |
| 62732 | 730344 |
| 62732A | 730344 |
| 62738 | 819373 |
| 62739 | 732450 |
| 62739A | 732450 |
| 62746 | 734631 |
| 62746A | 734631 |
| 62749 | 731808 |
| 62749A | 731808 |
| 62751 | 819373 |
| 62751A | 819373 |
| 62755 | 731807 |
| 62755A | 731807 |
| 62756 | 731805 |
| 62756A | 731805 |
| 62762 | 732605 |

| IAM | Valeo |
|---|---|
| **NISSENS** | |
| 62763 | **732460** |
| 62763A | **732460** |
| 62764 | **732460** |
| 62764A | **732460** |
| 62771 | **734801** |
| 62771A | **734801** |
| 62772 | **734802** |
| 62773A | **735234** |
| 62775 | **734807** |
| 62779 | **732741** |
| 62784A | **732742** |
| 62785A | **731811** |
| 62786A | **732740** |
| 62786A | **732741** |
| 62786A | **732743** |
| 62787 | **732736** |
| 62788A | **732315** |
| 62788A | **732706** |
| 62792A | **734805** |
| 62796A | **732855** |
| 62797A | **732849** |
| 62797A | **732870** |
| 62799 | **734379** |
| 62799 | **734378** |
| 62802 | **732748** |
| 62803A | **734196** |
| 62810 | **730446** |
| 62814 | **819119** |
| 62816 | **730446** |
| 62817 | **731646** |
| 62821 | **730449** |
| 62833 | **731054** |
| 62835 | **731642** |
| 62836 | **732540** |
| 62839 | **732539** |
| 62839 | **732327** |
| 62840 | **730454** |
| 62841 | **731056** |
| 62843 | **731451** |
| 62843 | **731649** |
| 62844 | **731451** |
| 62845 | **734132** |
| 62845 | **734142** |
| 62846 | **731462** |
| 62847 | **731462** |
| 62848 | **731647** |
| 62853 | **732748** |
| 62855 | **734146** |
| 62857A | **732524** |
| 62858A | **732525** |
| 62859 | **732612** |
| 62859 | **732613** |
| 62860A | **734480** |
| 62862 | **734131** |
| 62865 | **731638** |
| 62868A | **734129** |
| 62869A | **734129** |
| 62869A | **734481** |
| 62873 | **818749** |
| 62882 | **730454** |
| 62884 | **734809** |
| 62886 | **734128** |
| 62887 | **734139** |
| 62887 | **734136** |
| 62887 | **734138** |
| 62891 | **734127** |
| 62893 | **735203** |
| 62894 | **735198** |
| 62894 | **735202** |
| 62900 | **730119** |
| 62902A | **734246** |
| 62908 | **732484** |
| 62914 | **732596** |
| 62917 | **734446** |
| 62919 | **734446** |
| 62923A | **732529** |
| 62924A | **732528** |
| 62924A | **734215** |

| IAM | Valeo |
|---|---|
| **NISSENS** | |
| 62927A | **732528** |
| 62929 | **731085** |
| 62935 | **731654** |
| 62937 | **731656** |
| 62941 | **731087** |
| 62943 | **731147** |
| 62944 | **730407** |
| 62947 | **730404** |
| 62949 | **731664** |
| 62952 | **731670** |
| 62954 | **732718** |
| 62957 | **734671** |
| 62958 | **732589** |
| 62959 | **732589** |
| 62974 | **732405** |
| 62974A | **732405** |
| 62980 | **731134** |
| 62985 | **731202** |
| 62987 | **731287** |
| 62999 | **731656** |
| 63002 | **731236** |
| 63002 | **734821** |
| 63003A | **734388** |
| 63004A | **732549** |
| 63004A | **732795** |
| 63005A | **732724** |
| 63006A | **732550** |
| 63007 | **732825** |
| 63007A | **732825** |
| 63008A | **732826** |
| 63009A | **732824** |
| 63012A | **732347** |
| 63013A | **732348** |
| 63014 | **732694** |
| 63014A | **732719** |
| 63016A | **732723** |
| 63019A | **732349** |
| 63021 | **734322** |
| 63021A | **734322** |
| 63022A | **732876** |
| 63022A | **732877** |
| 63023A | **732878** |
| 63023A | **732947** |
| 63024A | **732879** |
| 63025 | **732846** |
| 63026 | **732853** |
| 63027A | **734381** |
| 63028A | **734382** |
| 63029A | **734380** |
| 63037 | **731237** |
| 63044 | **819388** |
| 63045 | **819389** |
| 63046 | **883880** |
| 63050 | **883880** |
| 63050A | **883880** |
| 63054 | **730396** |
| 63055 | **730395** |
| 63056 | **731236** |
| 63057 | **734644** |
| 63058 | **731217** |
| 63059 | **730993** |
| 63059 | **730994** |
| 63059A | **730993** |
| 63061 | **730994** |
| 63061A | **730994** |
| 63063 | **731174** |
| 63063 | **731175** |
| 63063A | **731175** |
| 63064 | **730395** |
| 63064 | **731175** |
| 63064A | **731175** |
| 63068A | **731525** |
| 63069 | **731393** |
| 63069A | **731393** |
| 63071 | **731839** |
| 63072 | **731840** |
| 63072A | **731840** |
| 63074 | **731842** |

| IAM | Valeo |
|---|---|
| **NISSENS** | |
| 63075 | **731843** |
| 63076 | **735065** |
| 63077 | **731847** |
| 63077A | **731847** |
| 63078 | **731848** |
| 63078A | **731848** |
| 63081 | **731846** |
| 63083 | **734604** |
| 63086A | **734384** |
| 63087A | **734385** |
| 63089 | **734242** |
| 63090 | **730152** |
| 63092 | **734386** |
| 63094 | **734464** |
| 63096 | **734384** |
| 63111A | **734432** |
| 63112A | **735080** |
| 63114A | **734339** |
| 63122 | **734946** |
| 63142 | **883751** |
| 63144 | **883771** |
| 63146 | **883856** |
| 63147 | **883857** |
| 63180 | **883767** |
| 63223 | **883877** |
| 63223A | **883877** |
| 63224 | **730396** |
| 63225 | **883878** |
| 63226 | **883920** |
| 63227 | **731022** |
| 63232 | **730395** |
| 63232 | **730396** |
| 63232 | **730993** |
| 63233 | **730395** |
| 63238 | **883857** |
| 63238A | **883857** |
| 63239 | **883856** |
| 63239A | **883856** |
| 63242 | **883751** |
| 63244 | **731236** |
| 63244 | **735229** |
| 63245 | **731237** |
| 63246A | **732549** |
| 63246A | **732729** |
| 63247A | **732548** |
| 63248A | **732724** |
| 63248A | **732795** |
| 63249A | **732550** |
| 63252A | **730993** |
| 63253A | **734429** |
| 63254A | **732032** |
| 63273 | **730125** |
| 63274 | **883858** |
| 63275 | **883859** |
| 63276A | **730975** |
| 63278 | **731022** |
| 63278A | **731022** |
| 63280 | **730152** |
| 63282 | **883881** |
| 63284 | **731178** |
| 63285 | **731013** |
| 63285A | **731013** |
| 63286 | **731179** |
| 63287 | **883920** |
| 63287A | **883920** |
| 63288 | **883767** |
| 63288A | **883767** |
| 63289 | **731170** |
| 63289A | **731170** |
| 63290A | **732606** |
| 63291A | **731421** |
| 63292A | **734271** |
| 63297 | **732607** |
| 63299 | **734353** |
| 63301 | **734623** |
| 63302 | **731635** |
| 63304 | **732790** |
| 63304 | **730423** |

| IAM | Valeo |
|---|---|
| **NISSENS** | |
| 63305 | **730423** |
| 63306 | **730424** |
| 63308 | **731459** |
| 63308A | **731458** |
| 63308A | **731459** |
| 63309 | **731434** |
| 63309A | **731434** |
| 63310 | **731434** |
| 63310A | **731434** |
| 63312 | **731469** |
| 63312A | **731469** |
| 63313 | **731629** |
| 63314A | **734109** |
| 63314A | **731471** |
| 63315 | **734624** |
| 63317 | **730591** |
| 63318 | **731375** |
| 63319 | **731375** |
| 63319 | **731978** |
| 63320 | **731374** |
| 63322 | **811056** |
| 63323 | **731980** |
| 63328 | **816649** |
| 63340 | **731474** |
| 63340A | **730411** |
| 63341 | **730429** |
| 63344 | **734114** |
| 63345 | **734114** |
| 63346 | **734112** |
| 63390 | **734264** |
| 63411 | **816555** |
| 63412 | **816555** |
| 63421 | **810892** |
| 63424 | **730534** |
| 63425 | **810892** |
| 63465 | **810915** |
| 63481 | **730015** |
| 63502A | **732908** |
| 63502A | **732909** |
| 63502A | **732892** |
| 63502A | **732910** |
| 63502A | **732887** |
| 63502A | **732886** |
| 63502A | **732890** |
| 63502 | **732910** |
| 63503 | **810955** |
| 63505 | **732930** |
| 63508A | **731743** |
| 63509 | **731570** |
| 63509A | **731744** |
| 63509A | **731570** |
| 63512A | **731389** |
| 63514 | **730974** |
| 63518 | **730630** |
| 63521 | **730368** |
| 63521A | **730368** |
| 63522 | **730372** |
| 63522A | **730372** |
| 63523 | **730569** |
| 63523A | **730569** |
| 63524 | **730572** |
| 63527 | **730577** |
| 63528 | **730575** |
| 63535 | **730366** |
| 63537 | **730515** |
| 63537A | **730515** |
| 63539 | **730927** |
| 63545 | **730953** |
| 63546 | **731295** |
| 63547 | **731296** |
| 63548 | **731570** |
| 63555 | **735255** |
| 63555A | **735255** |
| 63557 | **730040** |
| 63558 | **730040** |
| 63561 | **811380** |
| 63564 | **732565** |
| 63569 | **883765** |

| IAM | Valeo |
|---|---|
| **NISSENS** | |
| 63572 | **883765** |
| 63574 | **731181** |
| 63574A | **731181** |
| 63576A | **731186** |
| 63578 | **731176** |
| 63578A | **731176** |
| 63581 | **810919** |
| 63582 | **732577** |
| 63585 | **730984** |
| 63585A | **730984** |
| 63605A | **734366** |
| 63606A | **734338** |
| 63608A | **734423** |
| 63613 | **810919** |
| 63614 | **810955** |
| 63617 | **730506** |
| 63618 | **730512** |
| 63688 | **732892** |
| 63689A | **732894** |
| 63692A | **732908** |
| 63693 | **732896** |
| 63694A | **732895** |
| 63695A | **732880** |
| 63695A | **732881** |
| 63695A | **732944** |
| 63696 | **732904** |
| 63698 | **732910** |
| 63699 | **732882** |
| 63701 | **732567** |
| 63705A | **732598** |
| 63705A | **734281** |
| 63706A | **732886** |
| 63706A | **732910** |
| 63707A | **732886** |
| 63708A | **732886** |
| 63708A | **732885** |
| 63709 | **730018** |
| 63714 | **731750** |
| 63715 | **732564** |
| 63718A | **731530** |
| 63719A | **732890** |
| 63719A | **732892** |
| 63720 | **810882** |
| 63721 | **810882** |
| 63725 | **810827** |
| 63728 | **730898** |
| 63729A | **810827** |
| 63731A | **731381** |
| 63732A | **731384** |
| 63733A | **731382** |
| 63734 | **731584** |
| 63735 | **731586** |
| 63736A | **731527** |
| 63738A | **731383** |
| 63739A | **731574** |
| 63740 | **816700** |
| 63742 | **730634** |
| 63743A | **731575** |
| 63744A | **732893** |
| 63745A | **732794** |
| 63745A | **734473** |
| 63746 | **731584** |
| 63747 | **734411** |
| 63749A | **734708** |
| 63755 | **810952** |
| 63758 | **734741** |
| 63761 | **732919** |
| 63762 | **732717** |
| 63764 | **732873** |
| 63765A | **732874** |
| 63766A | **732817** |
| 63767 | **732866** |
| 63770 | **810933** |
| 63770 | **883282** |
| 63776 | **734826** |
| 63777 | **734826** |
| 63794 | **732761** |
| 63800 | **883463** |

| IAM | Valeo |
|---|---|
| **NISSENS** | |
| 63808 | **732523** |
| 63809 | **732721** |
| 63812A | **732798** |
| 63815 | **734284** |
| 63816 | **732828** |
| 63816A | **732827** |
| 63816A | **732828** |
| 63817 | **732902** |
| 63818A | **732911** |
| 63819 | **732919** |
| 63819 | **732917** |
| 63823 | **732917** |
| 63824 | **732918** |
| 63824A | **732918** |
| 63825 | **810938** |
| 63826A | **732474** |
| 63831 | **731162** |
| 63832 | **731128** |
| 63832A | **731128** |
| 63835A | **732819** |
| 63838 | **731161** |
| 63843A | **732544** |
| 63850 | **810843** |
| 63851 | **731161** |
| 63851A | **731161** |
| 63853A | **731378** |
| 63854A | **731910** |
| 63855 | **732071** |
| 63855A | **732071** |
| 63857 | **732621** |
| 63858 | **732570** |
| 63859 | **732569** |
| 63860 | **810843** |
| 63861 | **810887** |
| 63862 | **731128** |
| 63867 | **883959** |
| 63868 | **810851** |
| 63871 | **810927** |
| 63873 | **819431** |
| 63874 | **730184** |
| 63876 | **730185** |
| 63878 | **810995** |
| 63880 | **810835** |
| 63881 | **734828** |
| 63882 | **883875** |
| 63883 | **816657** |
| 63886 | **732387** |
| 63887 | **810912** |
| 63888 | **730551** |
| 63891 | **730510** |
| 63894 | **730499** |
| 63896 | **732316** |
| 63897 | **730055** |
| 63904 | **810889** |
| 63906 | **730180** |
| 63906 | **730511** |
| 63911 | **730140** |
| 63911A | **730140** |
| 63912A | **730944** |
| 63915 | **730140** |
| 63918 | **816552** |
| 63919 | **883875** |
| 63921 | **816655** |
| 63924 | **816658** |
| 63924A | **816658** |
| 63925 | **730551** |
| 63925A | **730551** |
| 63926 | **816656** |
| 63926A | **816656** |
| 63927 | **816657** |
| 63928 | **816654** |
| 63928A | **816654** |
| 63929 | **816655** |
| 63929A | **816655** |
| 63931 | **730055** |
| 63931A | **730055** |
| 63934 | **810851** |
| 63934A | **810851** |

| NISSENS | Valeo |
|---|---|
| 63935A | 732049 |
| 63936A | 732050 |
| 63937 | 731378 |
| 63937A | 731378 |
| 63938 | 731380 |
| 63939 | 731379 |
| 63939A | 731379 |
| 63940 | 730940 |
| 63940A | 730940 |
| 63942 | 730548 |
| 63942A | 730548 |
| 63943 | 730549 |
| 63943A | 730549 |
| 63945 | 730540 |
| 63946 | 730183 |
| 63947 | 730502 |
| 63948 | 730973 |
| 63949 | 730633 |
| 63949A | 730633 |
| 63954 | 810888 |
| 63954 | 810887 |
| 63955 | 730510 |
| 63958 | 883875 |
| 63959 | 883851 |
| 63962 | 816657 |
| 63963 | 816656 |
| 63964 | 816654 |
| 63966 | 816552 |
| 63967 | 730182 |
| 63967A | 730182 |
| 63968 | 730181 |
| 63974 | 810926 |
| 63975 | 731129 |
| 63976 | 731529 |
| 63976A | 731529 |
| 63977 | 731538 |
| 63977A | 731538 |
| 63983 | 731552 |
| 63984 | 730969 |
| 63985 | 732072 |
| 63988 | 883727 |
| 63989 | 731269 |
| 63989 | 731271 |
| 63991 | 731386 |
| 63992 | 731387 |
| 63993 | 731385 |
| 63995 | 730947 |
| 63995A | 730947 |
| 63996 | 730948 |
| 63997 | 730945 |
| 63997A | 730945 |
| 63998 | 730946 |
| 64001 | 883958 |
| 64003 | 883921 |
| 64004A | 730947 |
| 64004A | 731271 |
| 64011 | 730375 |
| 64013 | 730591 |
| 64018 | 731235 |
| 64019 | 732758 |
| 64026 | 730565 |
| 64028 | 732759 |
| 64031 | 731212 |
| 64033 | 732110 |
| 64034 | 732123 |
| 64034A | 732123 |
| 64035 | 732122 |
| 64035A | 732122 |
| 64036A | 732121 |
| 64037 | 732120 |
| 64037A | 732120 |
| 64038 | 732121 |
| 64040 | 810965 |
| 64049 | 732108 |
| 64052 | 810965 |
| 64056 | 810965 |
| 64057A | 810965 |
| 64058 | 732108 |

| NISSENS | Valeo |
|---|---|
| 64059A | 810965 |
| 64065 | 732479 |
| 64079 | 731463 |
| 64085 | 731456 |
| 64087 | 731438 |
| 64091 | 731153 |
| 64096 | 731675 |
| 64101A | 731606 |
| 64101A | 731607 |
| 64101A | 732175 |
| 64103A | 733062 |
| 64104 | 732864 |
| 64114 | 735212 |
| 64161 | 734213 |
| 64162 | 734170 |
| 64163 | 734918 |
| 64164 | 735073 |
| 64165 | 734214 |
| 64167 | 734164 |
| 64168 | 734835 |
| 64169 | 735074 |
| 64175 | 734917 |
| 64177 | 732750 |
| 64183 | 734166 |
| 64185 | 732410 |
| 64186 | 734577 |
| 64188 | 731677 |
| 64195 | 734171 |
| 64197 | 735564 |
| 64198 | 735606 |
| 64200A | 735577 |
| 64207 | 731211 |
| 64209 | 731815 |
| 64210 | 731412 |
| 64211 | 731818 |
| 64211A | 731818 |
| 64216 | 731816 |
| 64217 | 734354 |
| 64300A | 732400 |
| 64301A | 732399 |
| 64302A | 732402 |
| 64304A | 734290 |
| 64305A | 731817 |
| 64306A | 731076 |
| 64307 | 734354 |
| 64307A | 734354 |
| 64308A | 734829 |
| 64626A | 734204 |
| 64629A | 734216 |
| 64630A | 734217 |
| 64631A | 734199 |
| 64632A | 734200 |
| 64633 | 735415 |
| 64635A | 735214 |
| 64636A | 734205 |
| 64638A | 734397 |
| 64639A | 734182 |
| 64640A | 734401 |
| 64641A | 734490 |
| 64642A | 734491 |
| 64643A | 735075 |
| 64644A | 734183 |
| 64644A | 734493 |
| 64646A | 734711 |
| 64648A | 734711 |
| 64655A | 734916 |
| 64657 | 734201 |
| 64664A | 731569 |
| 64666A | 735589 |
| 64671A | 735586 |
| 64678A | 735215 |
| 64679A | 735445 |
| 64684 | 735416 |
| 64685 | 735069 |
| 64687 | 735070 |
| 64688 | 735070 |
| 64695 | 735407 |
| 64699A | 734489 |

| NISSENS | Valeo |
|---|---|
| 64703A | 734488 |
| 64706 | 734172 |
| 64718 | 730471 |
| 64721 | 730468 |
| 64724 | 731119 |
| 64725 | 731095 |
| 64729 | 731716 |
| 64731 | 731717 |
| 64735 | 731097 |
| 64736 | 731110 |
| 64736 | 731114 |
| 64738 | 730468 |
| 64741 | 731119 |
| 64742 | 734180 |
| 64745 | 731833 |
| 64745 | 732476 |
| 64746A | 731568 |
| 64749 | 731716 |
| 64754 | 734177 |
| 64754A | 734177 |
| 64755 | 734204 |
| 64761 | 734466 |
| 64769 | 731196 |
| 64769A | 731196 |
| 64770 | 730466 |
| 64772 | 731684 |
| 64772A | 731684 |
| 64773 | 732543 |
| 64776 | 732542 |
| 64777 | 732542 |
| 64781A | 732950 |
| 64782A | 732753 |
| 64783A | 732951 |
| 64784A | 732754 |
| 64785A | 734845 |
| 64786A | 731441 |
| 64788A | 732614 |
| 64789A | 732421 |
| 64795A | 732420 |
| 64796A | 732420 |
| 64797A | 734850 |
| 64798A | 734840 |
| 64799A | 734841 |
| 64802A | 731830 |
| 64804A | 731569 |
| 64822 | 732413 |
| 64830 | 730470 |
| 64833 | 731199 |
| 64835 | 731106 |
| 64836 | 731095 |
| 64837A | 731831 |
| 64839 | 731441 |
| 64843 | 731713 |
| 64855 | 732542 |
| 64858A | 735593 |
| 64868A | 731464 |
| 65100 | 883718 |
| 65111 | 883720 |
| 65111A | 883720 |
| 65120 | 883818 |
| 65151 | 883727 |
| 65151A | 883727 |
| 65156 | 730485 |
| 65157 | 730485 |
| 65158 | 732438 |
| 65159 | 883871 |
| 65161 | 883871 |
| 65162 | 730629 |
| 65163A | 883819 |
| 65165 | 883869 |
| 65165A | 883869 |
| 65171 | 883818 |
| 65172A | 816703 |
| 65174 | 883870 |
| 65174A | 883870 |
| 65175 | 734586 |
| 65184 | 731411 |
| 65185 | 730503 |

| NISSENS | Valeo |
|---|---|
| 65185 | 730504 |
| 65187 | 730504 |
| 65187A | 730504 |
| 65191 | 730485 |
| 65193 | 731025 |
| 65193A | 731025 |
| 65194 | 730505 |
| 65195 | 883820 |
| 65201A | 731606 |
| 65201A | 732175 |
| 65229A | 731606 |
| 65231 | 731605 |
| 65231A | 731605 |
| 65232 | 730954 |
| 65232A | 730954 |
| 65234 | 730956 |
| 65234A | 730956 |
| 65236 | 732438 |
| 65237 | 732436 |
| 65238A | 731616 |
| 65242A | 732397 |
| 65243 | 732437 |
| 65243A | 732437 |
| 65244A | 731265 |
| 65245A | 731267 |
| 65246A | 731127 |
| 65247A | 731032 |
| 65248A | 730955 |
| 65249 | 730971 |
| 65251A | 731005 |
| 65252 | 731006 |
| 65252A | 731006 |
| 65253 | 731007 |
| 65253A | 731007 |
| 65255 | 731267 |
| 65255 | 731268 |
| 65255A | 731268 |
| 65256 | 731008 |
| 65256A | 731008 |
| 65256A | 734741 |
| 65261 | 730485 |
| 65262A | 883849 |
| 65263 | 883863 |
| 65263 | 883864 |
| 65268 | 731266 |
| 65268A | 731266 |
| 65269A | 732863 |
| 65270A | 732862 |
| 65270A | 732863 |
| 65271A | 732862 |
| 65271A | 732864 |
| 65272A | 732864 |
| 65275A | 734739 |
| 65276A | 734740 |
| 65277A | 734332 |
| 65277A | 734333 |
| 65277A | 734335 |
| 65277A | 735120 |
| 65277 | 734332 |
| 65277A | 735121 |
| 65278 | 734335 |
| 65278A | 734335 |
| 65280A | 732872 |
| 65281 | 734333 |
| 65281A | 734333 |
| 65287 | 734606 |
| 65288 | 731401 |
| 65288 | 734606 |
| 65291A | 735120 |
| 65515A | 810968 |
| 65515A | 810970 |
| 65517 | 810957 |
| 65518 | 810956 |
| 65525A | 810970 |
| 65531A | 732368 |
| 65537A | 732366 |
| 65540A | 732365 |
| 65540 | 732365 |

| NISSENS | Valeo |
|---|---|
| 65542 | 732369 |
| 65542A | 732369 |
| 65543A | 732524 |
| 65545A | 810970 |
| 65546A | 734855 |
| 65548A | 734856 |
| 65551A | 732372 |
| 65552A | 735237 |
| 65553A | 734720 |
| 65559A | 734320 |
| 65560A | 732525 |
| 66605 | 734265 |
| 66611 | 734953 |
| 66622 | 734990 |
| 66624 | 734263 |
| 66633 | 735076 |
| 66642 | 734788 |
| 66645 | 734953 |
| 66698 | 735054 |
| 66699 | 734379 |
| 66704 | 734785 |
| 67000 | 734258 |
| 67006 | 732487 |
| 67007 | 732487 |
| 67009 | 731454 |
| 67010 | 734587 |
| 67012 | 734256 |
| 67016A | 734254 |
| 67017 | 734784 |
| 67022 | 734266 |
| 67023 | 734253 |
| 67027 | 734949 |
| 67029 | 734259 |
| 67036 | 734908 |
| 67037 | 734408 |
| 67039 | 734408 |
| 67040 | 734408 |
| 67049 | 735400 |
| 67075 | 735433 |
| 67102A | 732849 |
| 67103 | 734378 |
| 67106 | 734379 |
| 67107A | 734447 |
| 67107A | 734945 |
| 67156A | 734927 |
| 67156A | 734928 |
| 67156A | 734930 |
| 67156A | 735088 |
| 67156A | 734926 |
| 67157A | 734929 |
| 67157A | 735089 |
| 67228 | 730511 |
| 67229 | 732960 |
| 67246 | 732737 |
| 67283 | 734462 |
| 67284 | 734461 |
| 67285 | 735134 |
| 67286 | 735135 |
| 67300A | 731728 |
| 67303 | 732786 |
| 67304 | 732790 |
| 67305 | 732797 |
| 67307 | 883727 |
| 67322 | 732864 |
| 67344A | 734705 |
| 67345A | 734473 |
| 67347A | 734706 |
| 67348A | 735061 |
| 67349A | 734708 |
| 67350A | 734737 |
| 67359 | 735200 |
| 67479 | 735563 |
| 67480 | 735568 |
| 67488 | 734903 |
| 67489 | 734965 |
| 67509 | 735572 |
| 67700 | 734211 |
| 67701 | 731438 |

| NISSENS | Valeo |
|---|---|
| 67701 | 734212 |
| 67703 | 734158 |
| 67705A | 734577 |
| 67706A | 735208 |
| 67707A | 734405 |
| 67711 | 734465 |
| 67712 | 735209 |
| 67712 | 735210 |
| 67783A | 732951 |
| 67786A | 731441 |
| 67900 | 731270 |
| 67900 | 731269 |
| 68000A | 734714 |
| 68001A | 734830 |
| 68002A | 734831 |
| 68003A | 734831 |
| 68004A | 734714 |
| 68004A | 734830 |
| 68102A | 734110 |
| 68103 | 734476 |
| 68103 | 734477 |
| 68104 | 734478 |
| 68110 | 734218 |
| 68111 | 734218 |
| 68112 | 735049 |
| 68112 | 735050 |
| 68115 | 734723 |
| 68117 | 734716 |
| 68117 | 734717 |
| 68134A | 735243 |
| 68135A | 735242 |
| 68154 | 734144 |
| 68155 | 734143 |
| 68155 | 734424 |
| 68181A | 735058 |
| 68182 | 735574 |
| 68450 | 734848 |
| 68504 | 735573 |
| 68524 | 734492 |
| 68600 | 731458 |
| 68600A | 731458 |
| 68601A | 731473 |
| 68700 | 734247 |
| 68700A | 734246 |
| 68702 | 735062 |
| 68703A | 735081 |
| 68704 | 735064 |
| 68705A | 735063 |
| 68708A | 731785 |
| 68712 | 735204 |
| 68718 | 734729 |
| 68801 | 732580 |
| 68802 | 732582 |
| 68804 | 732584 |
| 68805 | 731978 |
| 68806 | 734364 |
| 69212 | 735222 |
| 69223 | 734274 |
| 69224 | 735045 |
| 69225 | 735271 |
| 69226 | 735271 |
| 69700A | 734327 |
| 69701A | 734328 |
| 69702A | 734326 |
| 69703A | 734327 |
| 69704 | 734329 |
| 85013 | 698178 |
| 85020 | 696101 |
| 85021 | 696101 |
| 85027 | 696157 |
| 85030 | 696276 |
| 85031 | 696276 |
| 85032 | 696276 |
| 85044 | 696099 |
| 85051 | 698483 |
| 85052 | 696197 |
| 85064 | 696109 |
| 85065 | 696109 |

| IAM | Valeo |
|---|---|
| **NISSENS** | |
| 85078 | **696129** |
| 85079 | **696130** |
| 85103 | **696108** |
| 85104 | **696108** |
| 85106 | **696109** |
| 85110 | **696111** |
| 85113 | **696113** |
| 85135 | **696100** |
| 85138 | **698562** |
| 85139 | **696100** |
| 85140 | **698179** |
| 85141 | **698178** |
| 85145 | **698786** |
| 85150 | **698788** |
| 85159 | **698484** |
| 85162 | **696106** |
| 85163 | **696104** |
| 85166 | **696098** |
| 85171 | **696158** |
| 85172 | **696159** |
| 85177 | **696172** |
| 85213 | **696151** |
| 85214 | **696150** |
| 85215 | **696149** |
| 85215 | **696154** |
| 85217 | **696152** |
| 85253 | **696216** |
| 85308 | **696211** |
| 85321 | **696212** |
| 85322 | **696213** |
| 85420 | **696119** |
| 85421 | **696120** |
| 85422 | **696121** |
| 85468 | **698320** |
| 85469 | **698321** |
| 85470 | **698322** |
| 85484 | **698084** |
| 85485 | **698085** |
| 85495 | **698367** |
| 85498 | **698015** |
| 85499 | **698004** |
| 85514 | **696217** |
| 85518 | **698085** |
| 85519 | **698155** |
| 85521 | **696012** |
| 85522 | **696020** |
| 85523 | **696023** |
| 85524 | **696021** |
| 85525 | **696022** |
| 85543 | **696078** |
| 85547 | **696055** |
| 85551 | **696196** |
| 85561 | **696091** |
| 85578 | **696085** |
| 85597 | **698302** |
| 85605 | **696138** |
| 85606 | **696132** |
| 85606 | **696139** |
| 85606 | **696140** |
| 85606 | **696141** |
| 85618 | **696043** |
| 85619 | **696179** |
| 85630 | **696277** |
| 85633 | **696275** |
| 90533 | **816751** |
| 90535 | **816748** |
| 90542 | **816666** |
| 90607 | **817943** |
| 96563 | **818820** |
| 96578 | **817640** |
| 96581 | **818819** |
| 96600 | **818229** |
| 96611 | **818215** |
| 96615 | **818824** |
| 96617 | **818209** |
| 96619 | **818213** |
| 96623 | **818897** |
| 96624 | **818897** |

| IAM | Valeo |
|---|---|
| **NISSENS** | |
| 96625 | **818896** |
| 96626 | **818841** |
| 96627 | **818837** |
| 96628 | **817994** |
| 96634 | **817936** |
| 96635 | **818894** |
| 96637 | **818214** |
| 96638 | **818822** |
| 96640 | **818804** |
| 96641 | **818801** |
| 96642 | **818802** |
| 96643 | **818797** |
| 96644 | **818794** |
| 96645 | **817699** |
| 96646 | **817730** |
| 96647 | **818722** |
| 96648 | **817654** |
| 96653 | **818726** |
| 96654 | **818716** |
| 96656 | **818809** |
| 96658 | **817937** |
| 96671 | **817393** |
| 96672 | **818805** |
| 96678 | **817870** |
| 96679 | **817653** |
| 96680 | **818812** |
| 96680 | **817938** |
| 96681 | **817653** |
| 96682 | **817487** |
| 96684 | **817729** |
| 96685 | **817699** |
| 96686 | **817635** |
| 96687 | **818815** |
| 96688 | **818814** |
| 96689 | **818717** |
| 96690 | **818827** |
| 96691 | **818828** |
| 96692 | **818834** |
| 96693 | **817888** |
| 96694 | **817887** |
| 96696 | **817942** |
| 96697 | **817876** |
| 96698 | **817862** |
| 96699 | **817861** |
| 96700 | **817879** |
| 96701 | **817881** |
| 96702 | **817238** |
| 96703 | **817882** |
| 96704 | **818725** |
| 96705 | **817901** |
| 96706 | **817865** |
| 96707 | **818757** |
| 96708 | **817869** |
| 96708 | **817870** |
| 96709 | **817867** |
| 96711 | **818719** |
| 96714 | **817760** |
| 96715 | **818898** |
| 96715 | **818899** |
| 96715 | **818795** |
| 96716 | **818806** |
| 96718 | **817845** |
| 96720 | **817638** |
| 96721 | **818816** |
| 96723 | **818715** |
| 96724 | **818796** |
| 96726 | **817877** |
| 96727 | **818724** |
| 96728 | **818727** |
| 96729 | **818807** |
| 96730 | **818808** |
| 96731 | **818720** |
| 96732 | **818800** |
| 96733 | **817891** |
| 96734 | **817864** |
| 96736 | **818711** |
| 96736 | **818712** |
| 96739 | **817918** |

| IAM | Valeo |
|---|---|
| **NISSENS** | |
| 96741 | **817874** |
| 96742 | **817873** |
| 96746 | **817488** |
| 96748 | **817697** |
| 96749 | **817729** |
| 96750 | **817936** |
| 96755 | **817372** |
| 96757 | **817634** |
| 96759 | **817459** |
| 96762 | **817554** |
| 96764 | **817578** |
| 96765 | **817437** |
| 96766 | **817650** |
| 96767 | **817637** |
| 96768 | **817380** |
| 96769 | **817766** |
| 96770 | **817556** |
| 96772 | **817917** |
| 96773 | **817558** |
| 96774 | **817651** |
| 96775 | **817636** |
| 96775 | **817637** |
| 96776 | **818714** |
| 96777 | **818713** |
| 96779 | **817927** |
| 96782 | **817759** |
| 96784 | **817911** |
| 96785 | **818731** |
| 96786 | **817913** |
| 96788 | **817916** |
| 96789 | **818759** |
| 96790 | **817920** |
| 96791 | **817923** |
| 96792 | **817925** |
| 96793 | **817872** |
| 96794 | **817486** |
| 96795 | **817764** |
| 96796 | **817767** |
| 96799 | **817926** |
| 96809 | **817896** |
| 96815 | **816610** |
| 96821 | **817761** |
| 96822 | **816764** |
| 96824 | **816755** |
| 96830 | **817762** |
| 96833 | **816847** |
| 96834 | **817204** |
| 96835 | **816791** |
| 96837 | **817400** |
| 96838 | **816823** |
| 96842 | **816890** |
| 96846 | **816755** |
| 96847 | **817205** |
| 96848 | **816959** |
| 96849 | **816851** |
| 96850 | **816889** |
| 96851 | **816919** |
| 96853 | **816918** |
| 96854 | **816836** |
| 96855 | **817490** |
| 96856 | **816998** |
| 96857 | **817941** |
| 96859 | **817902** |
| 96860 | **817905** |
| 96861 | **817909** |
| 96862 | **817903** |
| 96863 | **817399** |
| 96864 | **817401** |
| 96865 | **817915** |
| 96866 | **817924** |
| 96867 | **817387** |
| 96889 | **817632** |
| 96890 | **817115** |
| 96891 | **817275** |
| 96892 | **817276** |
| 96893 | **817931** |
| 96894 | **817908** |
| 96895 | **817400** |

| IAM | Valeo |
|---|---|
| **NISSENS** | |
| 96896 | **817625** |
| 96898 | **818728** |
| 96899 | **817907** |
| 96910 | **816858** |
| 96912 | **816853** |
| 96918 | **818740** |
| 96918 | **818744** |
| 96924 | **816805** |
| 96928 | **816784** |
| 96928 | **816793** |
| 96930 | **816730** |
| 96933 | **818875** |
| 96936 | **816786** |
| 96940 | **816736** |
| 96941 | **816732** |
| 96942 | **816733** |
| 96943 | **816731** |
| 96947 | **816717** |
| 96956 | **816729** |
| 96957 | **817295** |
| 96958 | **816785** |
| 96960 | **817772** |
| 96961 | **817774** |
| 96962 | **816797** |
| 96964 | **818751** |
| 96964 | **818776** |
| 96964 | **816846** |
| 96966 | **817773** |
| 96966 | **817774** |
| 96967 | **816978** |
| 96968 | **816979** |
| 96969 | **818752** |
| 96970 | **818755** |
| 96971 | **817264** |
| 96972 | **817265** |
| 96972 | **818781** |
| 96974 | **817368** |
| 96975 | **817369** |
| 96976 | **818753** |
| 96978 | **818743** |
| 96986 | **818746** |
| 96986 | **818747** |
| 96987 | **818746** |
| 96987 | **818747** |
| 96991 | **818744** |
| 96992 | **817770** |
| 97006 | **817775** |
| 97014 | **818741** |
| 97015 | **818741** |
| 97022 | **818735** |
| 97032 | **818778** |
| 97038 | **817281** |
| 97047 | **818736** |
| 97052 | **817181** |
| 616571 | **734766** |
| 617843 | **732812** |
| 617845 | **732924** |
| 617845 | **734923** |
| 617846 | **732925** |
| 617847 | **734932** |
| 617848 | **732812** |
| 628952 | **735569** |
| 636002 | **735125** |
| 637605 | **732903** |
| 637931 | **732621** |
| 642091 | **731815** |
| 646281 | **735575** |
| 646321 | **734199** |
| 652611 | **730485** |
| 646806 | **735576** |

| IAM | Valeo |
|---|---|
| **NRF SERVICES** | |
| 27522 | **731179** |
| 27644 | **731828** |
| 30023 | **817764** |
| 30025 | **817873** |
| 30059 | **817896** |
| 30066 | **817632** |

| IAM | Valeo |
|---|---|
| **NRF SERVICES** | |
| 30078 | **817941** |
| 30097 | **817941** |
| 30108 | **817936** |
| 30109 | **817875** |
| 30111 | **817884** |
| 30112 | **817937** |
| 30117 | **817892** |
| 30118 | **817865** |
| 30119 | **817874** |
| 30120 | **817864** |
| 30121 | **817876** |
| 30122 | **817881** |
| 30123 | **817861** |
| 30124 | **817901** |
| 30127 | **817625** |
| 30129 | **817877** |
| 30130 | **817899** |
| 30131 | **818828** |
| 30133 | **818827** |
| 30134 | **817883** |
| 30138 | **818812** |
| 30138 | **817938** |
| 30139 | **817936** |
| 30140 | **818711** |
| 30140 | **818712** |
| 30141 | **818725** |
| 30142 | **817862** |
| 30147 | **818720** |
| 30148 | **818757** |
| 30151 | **817759** |
| 30152 | **817760** |
| 30154 | **818716** |
| 30161 | **818821** |
| 30164 | **818805** |
| 30165 | **818715** |
| 30166 | **818834** |
| 30170 | **818894** |
| 30176 | **818775** |
| 30177 | **818730** |
| 30178 | **818214** |
| 30188 | **818784** |
| 30190 | **818837** |
| 30191 | **818841** |
| 30194 | **818209** |
| 30195 | **818836** |
| 30197 | **818835** |
| 30198 | **818215** |
| 30199 | **818213** |
| 30201 | **818736** |
| 30202 | **818751** |
| 30210 | **818752** |
| 30212 | **816795** |
| 30213 | **816917** |
| 30218 | **816979** |
| 30220 | **816730** |
| 30222 | **816978** |
| 30225 | **817775** |
| 30229 | **817281** |
| 30230 | **818774** |
| 30231 | **818779** |
| 30232 | **818876** |
| 30233 | **818877** |
| 30234 | **817942** |
| 30408 | **817909** |
| 30409 | **817264** |
| 30410 | **817941** |
| 30412 | **817767** |
| 30413 | **817767** |
| 30414 | **817387** |
| 30415 | **817369** |
| 30418 | **817903** |
| 30419 | **817905** |
| 30420 | **817907** |
| 30421 | **817911** |
| 30424 | **817908** |
| 30425 | **817400** |
| 30425 | **817919** |
| 30426 | **817399** |

| IAM | Valeo |
|---|---|
| **NRF SERVICES** | |
| 30427 | **817916** |
| 30428 | **818759** |
| 30429 | **818728** |
| 30430 | **817400** |
| 30431 | **817924** |
| 30432 | **817926** |
| 30435 | **817762** |
| 30437 | **817761** |
| 30443 | **817767** |
| 30444 | **817766** |
| 30448 | **818755** |
| 30449 | **818741** |
| 30450 | **818741** |
| 30451 | **818735** |
| 30454 | **818795** |
| 30750 | **818224** |
| 30751 | **818823** |
| 30752 | **818824** |
| 30753 | **817867** |
| 30754 | **817869** |
| 30755 | **817870** |
| 30756 | **817867** |
| 30765 | **818819** |
| 30766 | **818825** |
| 30798 | **818897** |
| 30799 | **817438** |
| 30801 | **816789** |
| 30802 | **816823** |
| 30803 | **816851** |
| 30804 | **816699** |
| 30805 | **816613** |
| 30807 | **816793** |
| 30810 | **816731** |
| 30811 | **816736** |
| 30812 | **816732** |
| 30813 | **816733** |
| 30814 | **816846** |
| 30818 | **816836** |
| 30820 | **816755** |
| 30821 | **816610** |
| 30822 | **816758** |
| 30823 | **816730** |
| 30828 | **816918** |
| 30829 | **816919** |
| 30830 | **816890** |
| 30832 | **817490** |
| 30833 | **817879** |
| 30834 | **816959** |
| 30835 | **816889** |
| 30835 | **817437** |
| 30836 | **817651** |
| 30837 | **817115** |
| 30838 | **817653** |
| 30840 | **817238** |
| 30841 | **817181** |
| 30842 | **817556** |
| 30843 | **816889** |
| 30844 | **816998** |
| 30845 | **817275** |
| 30846 | **817276** |
| 30847 | **817438** |
| 30847 | **817457** |
| 30848 | **817459** |
| 30849 | **817486** |
| 30850 | **817555** |
| 30851 | **817578** |
| 30852 | **817640** |
| 30853 | **817650** |
| 30854 | **817729** |
| 30855 | **817697** |
| 30856 | **817698** |
| 30857 | **817699** |
| 30858 | **817729** |
| 30859 | **817828** |
| 30860 | **817845** |
| 30861 | **817854** |
| 30862 | **817882** |
| 30863 | **817888** |

| IAM | Valeo |
|---|---|
| NRF SERVICES | |
| 30864 | 817902 |
| 30865 | 817923 |
| 30866 | 817999 |
| 30867 | 818701 |
| 30868 | 818713 |
| 30869 | 818714 |
| 30870 | 818717 |
| 30872 | 818726 |
| 30873 | 817372 |
| 30874 | 817380 |
| 30875 | 817554 |
| 30876 | 817636 |
| 30877 | 817637 |
| 30878 | 818718 |
| 30879 | 818724 |
| 30886 | 817891 |
| 30887 | 818800 |
| 30889 | 817401 |
| 30893 | 817927 |
| 30894 | 817920 |
| 30899 | 818727 |
| 30900 | 818806 |
| 30901 | 818807 |
| 30902 | 818808 |
| 30903 | 818809 |
| 30904 | 818822 |
| 30905 | 817265 |
| 30906 | 818717 |
| 47006 | 696276 |
| 47007 | 696276 |
| 47021 | 696152 |
| 47023 | 698155 |
| 47024 | 696123 |
| 47025 | 696065 |
| 47026 | 696119 |
| 47027 | 696119 |
| 47028 | 696058 |
| 47029 | 696120 |
| 47030 | 698303 |
| 47033 | 696149 |
| 47034 | 696151 |
| 47035 | 696153 |
| 47038 | 698179 |
| 47039 | 698562 |
| 47045 | 696063 |
| 47046 | 696062 |
| 47057 | 696041 |
| 47061 | 696154 |
| 47071 | 696036 |
| 47072 | 696037 |
| 47073 | 696141 |
| 47074 | 696132 |
| 47074 | 696140 |
| 47077 | 696158 |
| 47800 | 696108 |
| 50001 | 732748 |
| 50102 | 730566 |
| 50104 | 730590 |
| 50109 | 730563 |
| 50117 | 730119 |
| 50118 | 730119 |
| 50120 | 730565 |
| 50120 | 732758 |
| 50120 | 732759 |
| 50121 | 730565 |
| 50121 | 731210 |
| 50123 | 730578 |
| 50124 | 730591 |
| 50124 | 730970 |
| 50125 | 730970 |
| 50125 | 730591 |
| 50126 | 731022 |
| 50126 | 731170 |
| 50127 | 731211 |
| 50128 | 732759 |
| 50129 | 731212 |
| 50130 | 731617 |
| 50131 | 731734 |

| IAM | Valeo |
|---|---|
| NRF SERVICES | |
| 50132 | 731036 |
| 50134 | 731193 |
| 50201 | 732312 |
| 50201 | 732713 |
| 50201 | 732782 |
| 50217 | 735065 |
| 50218 | 732348 |
| 50218 | 731848 |
| 50219 | 732347 |
| 50219 | 731847 |
| 50220 | 731846 |
| 50222 | 731839 |
| 50223 | 731840 |
| 50231 | 732312 |
| 50232 | 731579 |
| 50321 | 732552 |
| 50332 | 732426 |
| 50392 | 734581 |
| 50400 | 730953 |
| 50401 | 730953 |
| 50402 | 730898 |
| 50403 | 730944 |
| 50405 | 730508 |
| 50406 | 730897 |
| 50407 | 730896 |
| 50410 | 730940 |
| 50411 | 730982 |
| 50412 | 730984 |
| 50413 | 730983 |
| 50414 | 730985 |
| 50415 | 730507 |
| 50415 | 734454 |
| 50415 | 816716 |
| 50416 | 730940 |
| 50417 | 730635 |
| 50418 | 731185 |
| 50419 | 731176 |
| 50420 | 731289 |
| 50421 | 731527 |
| 50422 | 731528 |
| 50423 | 731527 |
| 50424 | 731391 |
| 50425 | 731389 |
| 50427 | 731180 |
| 50428 | 731526 |
| 50429 | 732930 |
| 50430 | 732831 |
| 50430 | 732930 |
| 50430 | 734921 |
| 50432 | 734919 |
| 50434 | 732794 |
| 50435 | 734366 |
| 50436 | 734423 |
| 50437 | 734338 |
| 50438 | 732894 |
| 50438 | 734463 |
| 50451 | 731401 |
| 50452 | 734606 |
| 50454 | 731127 |
| 50455 | 731032 |
| 50456 | 731268 |
| 50457 | 730955 |
| 50458 | 731265 |
| 50464 | 732369 |
| 50464 | 810968 |
| 50464 | 810970 |
| 50504 | 883820 |
| 50506 | 731006 |
| 50513 | 819260 |
| 50514 | 819259 |
| 50516 | 730349 |
| 50519 | 731501 |
| 50527 | 731422 |
| 50528 | 731428 |
| 50529 | 731429 |
| 50530 | 731430 |
| 50531 | 731503 |
| 50534 | 731807 |

| IAM | Valeo |
|---|---|
| NRF SERVICES | |
| 50535 | 732437 |
| 50539 | 732963 |
| 50540 | 734268 |
| 50542 | 732864 |
| 50542 | 732862 |
| 50543 | 734269 |
| 50544 | 734270 |
| 50550 | 730183 |
| 50551 | 731013 |
| 50552 | 731178 |
| 50559 | 730229 |
| 50562 | 732549 |
| 50562 | 732729 |
| 50563 | 731847 |
| 50563 | 732347 |
| 50564 | 819413 |
| 50565 | 731511 |
| 50568 | 732456 |
| 50569 | 732819 |
| 50570 | 731847 |
| 50574 | 732472 |
| 50575 | 732462 |
| 50576 | 734674 |
| 50579 | 732446 |
| 50581 | 734806 |
| 50582 | 734668 |
| 50582 | 734749 |
| 50583 | 732471 |
| 50588 | 818749 |
| 51281 | 731808 |
| 51282 | 731805 |
| 51314 | 734738 |
| 51316 | 730361 |
| 51316 | 730360 |
| 51318 | 730362 |
| 51319 | 730362 |
| 51320 | 734751 |
| 51351 | 731509 |
| 51352 | 731508 |
| 51354 | 731520 |
| 51355 | 730365 |
| 51356 | 731520 |
| 51357 | 819412 |
| 51360 | 732198 |
| 51361 | 819412 |
| 51364 | 810952 |
| 51366 | 810952 |
| 51516 | 731393 |
| 51538 | 730334 |
| 51538 | 816649 |
| 51541 | 734695 |
| 51568 | 734289 |
| 51577 | 734276 |
| 51578 | 734752 |
| 51579 | 734755 |
| 51580 | 734276 |
| 51581 | 734754 |
| 51582 | 734276 |
| 51583 | 734753 |
| 51586 | 734859 |
| 52003 | 811348 |
| 52008 | 730317 |
| 52009 | 732589 |
| 52019 | 883858 |
| 52019 | 730125 |
| 52020 | 731073 |
| 52021 | 731417 |
| 52024 | 810892 |
| 52026 | 810851 |
| 52027 | 731372 |
| 52029 | 731466 |
| 52030 | 731472 |
| 52033 | 810926 |
| 52034 | 731492 |
| 52035 | 730040 |
| 52035 | 883765 |
| 52037 | 811389 |
| 52044 | 732592 |

| IAM | Valeo |
|---|---|
| NRF SERVICES | |
| 52045 | 730999 |
| 52046 | 735229 |
| 52046 | 731236 |
| 52046 | 731237 |
| 52050 | 731087 |
| 52052 | 730408 |
| 52053 | 732483 |
| 52054 | 734596 |
| 52055 | 734766 |
| 52056 | 734761 |
| 52057 | 734671 |
| 52058 | 732484 |
| 52058 | 734427 |
| 52060 | 732718 |
| 52061 | 731611 |
| 52062 | 730997 |
| 52062 | 731611 |
| 52063 | 730995 |
| 52063 | 731611 |
| 52069 | 732528 |
| 52069 | 732529 |
| 52075 | 883787 |
| 52088 | 734205 |
| 52090 | 734821 |
| 52121 | 734627 |
| 52142 | 731421 |
| 52146 | 731271 |
| 52149 | 734819 |
| 52152 | 883765 |
| 52152 | 730040 |
| 52156 | 883881 |
| 52157 | 731173 |
| 52160 | 732698 |
| 52171 | 883920 |
| 52178 | 730883 |
| 52182 | 810827 |
| 52184 | 810869 |
| 52187 | 731217 |
| 52190 | 730018 |
| 52201 | 810952 |
| 52204 | 730534 |
| 52204 | 730993 |
| 52206 | 730534 |
| 52211 | 810912 |
| 52221 | 730123 |
| 53200 | 731973 |
| 53200 | 732787 |
| 53201 | 731974 |
| 53202 | 731975 |
| 53203 | 734283 |
| 53207 | 732750 |
| 53209 | 732474 |
| 53209 | 732720 |
| 53210 | 732523 |
| 53211 | 734840 |
| 53212 | 734841 |
| 53221 | 731977 |
| 53222 | 732688 |
| 53223 | 731972 |
| 53224 | 731980 |
| 53225 | 731374 |
| 53225 | 734236 |
| 53225 | 730980 |
| 53226 | 734221 |
| 53227 | 731981 |
| 53227 | 732557 |
| 53228 | 734224 |
| 53229 | 732913 |
| 53230 | 734225 |
| 53231 | 735171 |
| 53232 | 735172 |
| 53237 | 734220 |
| 53242 | 732696 |
| 53245 | 734692 |
| 53247 | 734362 |
| 53248 | 734361 |
| 53249 | 732913 |
| 53250 | 734250 |

| IAM | Valeo |
|---|---|
| NRF SERVICES | |
| 53252 | 734249 |
| 53253 | 734248 |
| 53254 | 732584 |
| 53254 | 734765 |
| 53256 | 734254 |
| 53258 | 734261 |
| 53259 | 732487 |
| 53260 | 732488 |
| 53263 | 734252 |
| 53264 | 732754 |
| 53265 | 730435 |
| 53266 | 732950 |
| 53267 | 732951 |
| 53270 | 732421 |
| 53273 | 732542 |
| 53275 | 734216 |
| 53276 | 731857 |
| 53277 | 731620 |
| 53278 | 732753 |
| 53279 | 734662 |
| 53280 | 731463 |
| 53283 | 731649 |
| 53285 | 734424 |
| 53286 | 731634 |
| 53287 | 731634 |
| 53288 | 734466 |
| 53290 | 731853 |
| 53291 | 732726 |
| 53293 | 732475 |
| 53294 | 731054 |
| 53296 | 731462 |
| 53300 | 731451 |
| 53301 | 734141 |
| 53302 | 734177 |
| 53304 | 734138 |
| 53306 | 732476 |
| 53307 | 734488 |
| 53308 | 734181 |
| 53309 | 732325 |
| 53312 | 734129 |
| 53313 | 734129 |
| 53314 | 734136 |
| 53315 | 732613 |
| 53317 | 734119 |
| 53319 | 734850 |
| 53320 | 731638 |
| 53322 | 732326 |
| 53324 | 734182 |
| 53325 | 734200 |
| 53327 | 731147 |
| 53329 | 734128 |
| 53333 | 730456 |
| 53336 | 731441 |
| 53336 | 731685 |
| 53337 | 732704 |
| 53339 | 732614 |
| 53340 | 734126 |
| 53341 | 732405 |
| 53350 | 734166 |
| 53352 | 732542 |
| 53357 | 734259 |
| 53371 | 734408 |
| 53373 | 734199 |
| 53375 | 734251 |
| 53376 | 734266 |
| 53377 | 734468 |
| 53379 | 734491 |
| 53380 | 734401 |
| 53381 | 734490 |
| 53383 | 734410 |
| 53384 | 734762 |
| 53385 | 735266 |
| 53387 | 734705 |
| 53387 | 734736 |
| 53388 | 734708 |
| 53389 | 734706 |
| 53390 | 734473 |
| 53391 | 735050 |

| IAM | Valeo |
|---|---|
| NRF SERVICES | |
| 53392 | 734703 |
| 53393 | 735049 |
| 53396 | 734711 |
| 53398 | 734712 |
| 53399 | 731119 |
| 53400 | 732420 |
| 53403 | 734321 |
| 53404 | 734332 |
| 53405 | 734332 |
| 53405 | 734335 |
| 53405 | 735120 |
| 53406 | 732872 |
| 53407 | 735204 |
| 53410 | 734483 |
| 53411 | 735053 |
| 53412 | 734484 |
| 53415 | 734380 |
| 53416 | 734385 |
| 53419 | 732741 |
| 53419 | 732743 |
| 53424 | 732904 |
| 53424 | 732910 |
| 53424 | 732909 |
| 53424 | 732908 |
| 53424 | 732906 |
| 53424 | 732893 |
| 53424 | 732892 |
| 53424 | 732891 |
| 53424 | 732890 |
| 53424 | 732886 |
| 53424 | 732887 |
| 53427 | 734737 |
| 53430 | 734917 |
| 53437 | 734705 |
| 53441 | 734381 |
| 53442 | 734382 |
| 53447 | 735080 |
| 53448 | 734842 |
| 53449 | 734916 |
| 53450 | 735081 |
| 53451 | 735062 |
| 53452 | 735063 |
| 53453 | 735064 |
| 53459 | 735069 |
| 53459 | 735072 |
| 53460 | 735070 |
| 53462 | 735057 |
| 53463 | 735056 |
| 53464 | 735055 |
| 53465 | 734320 |
| 53471 | 734903 |
| 53477 | 735080 |
| 53478 | 734121 |
| 53486 | 734263 |
| 53487 | 735021 |
| 53501 | 732780 |
| 53504 | 734950 |
| 53505 | 734258 |
| 53507 | 734110 |
| 53508 | 734114 |
| 53509 | 734114 |
| 53510 | 731287 |
| 53512 | 734212 |
| 53515 | 734112 |
| 53516 | 734821 |
| 53518 | 734120 |
| 53519 | 732345 |
| 53520 | 731646 |
| 53522 | 732612 |
| 53522 | 732613 |
| 53600 | 732006 |
| 53601 | 734457 |
| 53601 | 732923 |
| 53602 | 732789 |
| 53603 | 734228 |
| 53605 | 734459 |
| 53606 | 734458 |
| 53607 | 732557 |

| NRF SERVICES | Valeo |
|---|---|
| 53608 | 732147 |
| 53609 | 734229 |
| 53612 | 734231 |
| 53614 | 734448 |
| 53615 | 734364 |
| 53616 | 734363 |
| 53619 | 734238 |
| 53620 | 734237 |
| 53621 | 732685 |
| 53626 | 734361 |
| 53627 | 735171 |
| 53628 | 732724 |
| 53628 | 732795 |
| 53629 | 732723 |
| 53630 | 734271 |
| 53631 | 732032 |
| 53632 | 732710 |
| 53637 | 735157 |
| 53643 | 734949 |
| 53644 | 734784 |
| 53647 | 734767 |
| 53648 | 734764 |
| 53649 | 734767 |
| 54201 | 734429 |
| 54201 | 730993 |
| 54501 | 811071 |
| 54502 | 811073 |
| 54601 | 734772 |
| 54602 | 730349 |
| 54603 | 819260 |
| 54604 | 730172 |
| 54609 | 811387 |
| 54611 | 730631 |
| 54611 | 811047 |
| 54627 | 730975 |
| 54628 | 810827 |
| 54635 | 810955 |
| 54641 | 883852 |
| 54641 | 883959 |
| 54642 | 730183 |
| 54643 | 883729 |
| 54643 | 883959 |
| 54646 | 810912 |
| 54648 | 810835 |
| 54650 | 819431 |
| 54651 | 730955 |
| 54651 | 731267 |
| 54651 | 731127 |
| 54652 | 731005 |
| 54664 | 731025 |
| 54666 | 731735 |
| 54667 | 731736 |
| 54667 | 732003 |
| 54668 | 732729 |
| 54669 | 730015 |
| 54669 | 730634 |
| 54670 | 732003 |
| 54671 | 732003 |
| 54672 | 811071 |
| 54673 | 811073 |
| 54676 | 731295 |
| 54677 | 731296 |
| 54678 | 730507 |
| 54678 | 734454 |
| 54679 | 883811 |
| 54680 | 883812 |
| 54681 | 883857 |
| 54682 | 883880 |
| 54683 | 883463 |
| 54684 | 810843 |
| 54685 | 816654 |
| 54686 | 730946 |
| 54687 | 730945 |
| 54688 | 730946 |
| 54688 | 730947 |
| 54690 | 883820 |
| 54691 | 883718 |
| 54692 | 730505 |

| NRF SERVICES | Valeo |
|---|---|
| 54693 | 732437 |
| 54694 | 883720 |
| 54695 | 731007 |
| 54696 | 731006 |
| 54698 | 730954 |
| 54700 | 811067 |
| 54701 | 730991 |
| 54702 | 811387 |
| 54702 | 883825 |
| 54704 | 883751 |
| 54705 | 731380 |
| 54707 | 730948 |
| 54708 | 730956 |
| 54710 | 731271 |
| 54710 | 883727 |
| 54715 | 732520 |
| 54716 | 732520 |
| 54743 | 734464 |
| 54750 | 734285 |
| 54751 | 735041 |
| 54752 | 735040 |
| 55305 | 734290 |
| 55306 | 731820 |
| 55307 | 731817 |
| 55308 | 734242 |
| 55309 | 731606 |
| 55309 | 732175 |
| 55314 | 730559 |
| 55317 | 734384 |
| 55319 | 734829 |
| 55320 | 734794 |
| 55320 | 734795 |
| 55321 | 734277 |
| 55325 | 735234 |
| 55327 | 734321 |
| 55327 | 734320 |
| 55339 | 734354 |
| 55340 | 735042 |
| 55341 | 735097 |
| 55344 | 734146 |
| 55538 | 734327 |
| 57206 | 883686 |
| 57310 | 810927 |
| 57310 | 810933 |
| 57310 | 883282 |
| 57318 | 810843 |
| 57319 | 810843 |
| 57914 | 883053 |
| 58001 | 730309 |
| 58002 | 730319 |
| 58005 | 731278 |
| 58010 | 731276 |
| 58011 | 731282 |
| 58013 | 731302 |
| 58013 | 731303 |
| 58015 | 731304 |
| 58016 | 734239 |
| 58017 | 731306 |
| 58018 | 731298 |
| 58019 | 731381 |
| 58020 | 731383 |
| 58021 | 731384 |
| 58022 | 731382 |
| 58023 | 731378 |
| 58025 | 731379 |
| 58027 | 731387 |
| 58055 | 731375 |
| 58056 | 730980 |
| 58056 | 731374 |
| 58059 | 731129 |
| 58060 | 731529 |
| 58061 | 731531 |
| 58067 | 731498 |
| 58068 | 731186 |
| 58069 | 731295 |
| 58070 | 731296 |
| 58072 | 731375 |
| 58072 | 731562 |

| NRF SERVICES | Valeo |
|---|---|
| 58072 | 732705 |
| 58074 | 731378 |
| 58075 | 731910 |
| 58076 | 731575 |
| 58077 | 731574 |
| 58079 | 731570 |
| 58083 | 731283 |
| 58084 | 731559 |
| 58085 | 731591 |
| 58092 | 731181 |
| 58093 | 731268 |
| 58095 | 731266 |
| 58097 | 731291 |
| 58098 | 731292 |
| 58099 | 731293 |
| 58100 | 731294 |
| 58101 | 731744 |
| 58105 | 730499 |
| 58106 | 731538 |
| 58107 | 731815 |
| 58108 | 732120 |
| 58109 | 732121 |
| 58110 | 731505 |
| 58111 | 730140 |
| 58115 | 732198 |
| 58117 | 731514 |
| 58118 | 731723 |
| 58119 | 730498 |
| 58120 | 961149 |
| 58122 | 732787 |
| 58123 | 731592 |
| 58124 | 730838 |
| 58127 | 811056 |
| 58128 | 810984 |
| 58129 | 730344 |
| 58130 | 819383 |
| 58135 | 731728 |
| 58135 | 730945 |
| 58135 | 730946 |
| 58136 | 731269 |
| 58136 | 731271 |
| 58137 | 731270 |
| 58139 | 883727 |
| 58141 | 732839 |
| 58148 | 732621 |
| 58152 | 731840 |
| 58153 | 732608 |
| 58154 | 732607 |
| 58155 | 732606 |
| 58156 | 732605 |
| 58160 | 731294 |
| 58164 | 732591 |
| 58165 | 734301 |
| 58167 | 732791 |
| 58169 | 732580 |
| 58170 | 732924 |
| 58171 | 732578 |
| 58171 | 732851 |
| 58173 | 732564 |
| 58174 | 732563 |
| 58175 | 732559 |
| 58176 | 732551 |
| 58177 | 732550 |
| 58178 | 732548 |
| 58180 | 731283 |
| 58181 | 732888 |
| 58182 | 731451 |
| 58182 | 732327 |
| 58182 | 732539 |
| 58183 | 732535 |
| 58184 | 732534 |
| 58185 | 734932 |
| 58187 | 734246 |
| 58188 | 732903 |
| 58189 | 732517 |
| 58191 | 732503 |
| 58192 | 732389 |
| 58193 | 732387 |

| NRF SERVICES | Valeo |
|---|---|
| 58194 | 732387 |
| 58195 | 732948 |
| 58196 | 732338 |
| 58197 | 732317 |
| 58198 | 732316 |
| 58202 | 732248 |
| 58203 | 732879 |
| 58204 | 734339 |
| 58205 | 734345 |
| 58206 | 730365 |
| 58207 | 730055 |
| 58208 | 732090 |
| 58209 | 732072 |
| 58210 | 732071 |
| 58213 | 732050 |
| 58214 | 732049 |
| 58215 | 732013 |
| 58216 | 732011 |
| 58216 | 732012 |
| 58217 | 732721 |
| 58219 | 732007 |
| 58221 | 731981 |
| 58221 | 732005 |
| 58222 | 731981 |
| 58225 | 732792 |
| 58232 | 731804 |
| 58237 | 732925 |
| 58238 | 731696 |
| 58239 | 731647 |
| 58240 | 731605 |
| 58241 | 731593 |
| 58242 | 732544 |
| 58243 | 731572 |
| 58244 | 731561 |
| 58245 | 731550 |
| 58247 | 731725 |
| 58250 | 730375 |
| 58251 | 732567 |
| 58257 | 733074 |
| 58258 | 732785 |
| 58259 | 731537 |
| 58259 | 732361 |
| 58259 | 732811 |
| 58262 | 732692 |
| 58263 | 732883 |
| 58264 | 732756 |
| 58266 | 732831 |
| 58267 | 732887 |
| 58268 | 731611 |
| 58270 | 731611 |
| 58272 | 734287 |
| 58273 | 732851 |
| 58274 | 734273 |
| 58275 | 816711 |
| 58276 | 734272 |
| 58276 | 734274 |
| 58282 | 732824 |
| 58288 | 732348 |
| 58292 | 732876 |
| 58293 | 732877 |
| 58293 | 732876 |
| 58294 | 732947 |
| 58294 | 732878 |
| 58295 | 732623 |
| 58297 | 732885 |
| 58298 | 732886 |
| 58299 | 732904 |
| 58300 | 732910 |
| 58301 | 732906 |
| 58302 | 732787 |
| 58303 | 732598 |
| 58304 | 732908 |
| 58306 | 732890 |
| 58307 | 732891 |
| 58308 | 732892 |
| 58309 | 732893 |
| 58310 | 732894 |
| 58311 | 732895 |

| NRF SERVICES | Valeo |
|---|---|
| 58312 | 732896 |
| 58313 | 732830 |
| 58314 | 732880 |
| 58315 | 732881 |
| 58316 | 732687 |
| 58317 | 732717 |
| 58318 | 732827 |
| 58319 | 732828 |
| 58322 | 732918 |
| 58322 | 732050 |
| 58322 | 732717 |
| 58324 | 732919 |
| 58325 | 732817 |
| 58326 | 732866 |
| 58328 | 732873 |
| 58329 | 732874 |
| 58330 | 732902 |
| 58331 | 732911 |
| 58332 | 732846 |
| 58333 | 732853 |
| 58334 | 732867 |
| 58334 | 734449 |
| 58337 | 732863 |
| 58555 | 883428 |
| 58565 | 883464 |
| 58577 | 883720 |
| 58578 | 883718 |
| 58579 | 883863 |
| 58651 | 730119 |
| 58655 | 883686 |
| 58658 | 883727 |
| 58659 | 883053 |
| 58662 | 883729 |
| 58665 | 730040 |
| 58665 | 883765 |
| 58668 | 883751 |
| 58674 | 883767 |
| 58675 | 883771 |
| 58676 | 883715 |
| 58678 | 883774 |
| 58683 | 883773 |
| 58686 | 883811 |
| 58687 | 883812 |
| 58689 | 883806 |
| 58690 | 883806 |
| 58695 | 883851 |
| 58696 | 883818 |
| 58697 | 883819 |
| 58698 | 883820 |
| 58699 | 730485 |
| 58701 | 811010 |
| 58705 | 883813 |
| 58706 | 811387 |
| 58706 | 883825 |
| 58708 | 883827 |
| 58710 | 883959 |
| 58711 | 883857 |
| 58712 | 883849 |
| 58714 | 816700 |
| 58717 | 883809 |
| 58719 | 883860 |
| 58720 | 883856 |
| 58721 | 883859 |
| 58722 | 883858 |
| 58730 | 811385 |
| 58731 | 811385 |
| 58731 | 811386 |
| 58732 | 811387 |
| 58734 | 811389 |
| 58736 | 883866 |
| 58741 | 811381 |
| 58742 | 811392 |
| 58743 | 811068 |
| 58744 | 811067 |
| 58749 | 811380 |
| 58752 | 730991 |
| 58754 | 811069 |
| 58755 | 811070 |

| NRF SERVICES | Valeo |
|---|---|
| 58756 | 811071 |
| 58756 | 811070 |
| 58757 | 811073 |
| 58758 | 730990 |
| 58759 | 883920 |
| 58760 | 730948 |
| 58761 | 810851 |
| 58762 | 810887 |
| 58763 | 810888 |
| 58764 | 810835 |
| 58765 | 883958 |
| 58766 | 883921 |
| 58768 | 883869 |
| 58769 | 883870 |
| 58771 | 816655 |
| 58772 | 816657 |
| 58773 | 730510 |
| 58774 | 810912 |
| 58775 | 883877 |
| 58776 | 810915 |
| 58779 | 883878 |
| 58781 | 816707 |
| 58782 | 883880 |
| 58783 | 816656 |
| 58784 | 810995 |
| 58785 | 816657 |
| 58786 | 816658 |
| 58787 | 883875 |
| 58789 | 816706 |
| 58791 | 811073 |
| 58791 | 810949 |
| 58795 | 810926 |
| 58796 | 816552 |
| 58798 | 816716 |
| 58799 | 883727 |
| 58800 | 730370 |
| 58801 | 731271 |
| 58802 | 816554 |
| 58803 | 810836 |
| 58804 | 810836 |
| 58805 | 730999 |
| 58805 | 810919 |
| 58806 | 810955 |
| 58807 | 730372 |
| 58808 | 730366 |
| 58809 | 816710 |
| 58811 | 730365 |
| 58812 | 730494 |
| 58813 | 819428 |
| 58814 | 730491 |
| 58816 | 730975 |
| 58818 | 810954 |
| 58819 | 730503 |
| 58820 | 730504 |
| 58823 | 816715 |
| 58828 | 730368 |
| 58829 | 730506 |
| 58830 | 810938 |
| 58837 | 816555 |
| 58844 | 730519 |
| 58845 | 730520 |
| 58845 | 730309 |
| 58846 | 730540 |
| 58848 | 730548 |
| 58849 | 730549 |
| 58851 | 730512 |
| 58852 | 730551 |
| 58854 | 730635 |
| 58861 | 810947 |
| 58863 | 883871 |
| 58864 | 816703 |
| 58865 | 883875 |
| 58867 | 730360 |
| 58868 | 730361 |
| 58869 | 730362 |
| 58870 | 730363 |
| 58872 | 734615 |
| 58881 | 730565 |

| NRF SERVICES | Valeo |
|---|---|
| 58882 | 730565 |
| 58882 | 732758 |
| 58883 | 816647 |
| 58886 | 730572 |
| 58889 | 730575 |
| 58889 | 730974 |
| 58890 | 730575 |
| 58891 | 730577 |
| 58892 | 731271 |
| 58893 | 730569 |
| 58895 | 730040 |
| 58896 | 730947 |
| 58901 | 730184 |
| 58902 | 730185 |
| 58903 | 819431 |
| 58904 | 730542 |
| 58906 | 732108 |
| 58913 | 730957 |
| 58914 | 730958 |
| 58915 | 730959 |
| 58916 | 730960 |
| 58917 | 730958 |
| 58920 | 730515 |
| 58920 | 730368 |
| 58921 | 730946 |
| 58922 | 730927 |
| 58923 | 730630 |
| 58924 | 730633 |
| 58925 | 883876 |
| 58928 | 730972 |
| 58929 | 730971 |
| 58930 | 730975 |
| 58932 | 811071 |
| 58933 | 730510 |
| 58934 | 730181 |
| 58940 | 730632 |
| 58941 | 730973 |
| 58942 | 730969 |
| 58943 | 731128 |
| 58944 | 730634 |
| 58945 | 731550 |
| 58946 | 731009 |
| 58947 | 731005 |
| 58948 | 731006 |
| 58949 | 731007 |
| 58950 | 731008 |
| 58951 | 730976 |
| 58952 | 731375 |
| 58953 | 732705 |
| 58954 | 730980 |
| 58955 | 730980 |
| 58956 | 730981 |
| 58957 | 731173 |
| 58958 | 731166 |
| 58959 | 731165 |
| 58961 | 731010 |
| 58964 | 730997 |
| 58966 | 730317 |
| 58966 | 731177 |
| 58972 | 730396 |
| 58972 | 731174 |
| 58972 | 731175 |
| 58973 | 731175 |
| 58974 | 731170 |
| 58978 | 731162 |
| 58982 | 731148 |
| 58984 | 730934 |
| 58989 | 811070 |
| 58989 | 811071 |
| 58993 | 731168 |
| 58995 | 731591 |
| 58996 | 731251 |
| 71905 | 730510 |
| 309001 | 816853 |
| 309003 | 817773 |
| 309004 | 816802 |
| 309006 | 816786 |
| 309009 | 816806 |

| NRF SERVICES | Valeo |
|---|---|
| 309011 | 817774 |
| 309012 | 816784 |
| 309015 | 818744 |
| 309018 | 817772 |
| 309055 | 817369 |
| 309057 | 816961 |
| 309191 | 817770 |
| 309272 | 818735 |
| 309304 | 817774 |
| 309338 | 818749 |
| 503002 | 731025 |
| 503003 | 730947 |
| 503003 | 731269 |
| 503003 | 731270 |
| 503003 | 731271 |
| 503485 | 731054 |
| 503495 | 730408 |
| 503496 | 731087 |
| 503497 | 731090 |
| 503507 | 731217 |
| 503508 | 730396 |
| 503957 | 731199 |
| 503960 | 730466 |
| 503964 | 731569 |
| 503966 | 731568 |
| 503968 | 731682 |
| 503988 | 734172 |
| 504001 | 883954 |
| 504009 | 811047 |
| 504018 | 883956 |
| 504067 | 819219 |
| 504115 | 730454 |
| 504120 | 810965 |
| 504133 | 734267 |
| 504134 | 734256 |
| 504140 | 732108 |
| 504271 | 732442 |
| 504320 | 730411 |
| 504343 | 730457 |
| 504435 | 730117 |
| 504436 | 730856 |
| 504437 | 730857 |
| 504646 | 730125 |
| 504646 | 883858 |
| 504647 | 730993 |
| 504648 | 731217 |
| 504812 | 883720 |
| 504861 | 730241 |
| 504863 | 731073 |
| 504864 | 731417 |
| 505649 | 883818 |
| 505650 | 730503 |
| 505651 | 730504 |
| 505651 | 731025 |
| 505654 | 730370 |
| 505657 | 730485 |
| 505658 | 730945 |
| 505704 | 730446 |
| 506080 | 730397 |
| 506082 | 731020 |
| 506210 | 730124 |
| 506210 | 819176 |
| 506212 | 730124 |
| 506217 | 730123 |
| 506219 | 730484 |
| 506220 | 730483 |
| 506224 | 730484 |
| 506253 | 730140 |
| 506259 | 816658 |
| 506262 | 816656 |
| 506263 | 816655 |
| 506300 | 730168 |
| 506354 | 730316 |
| 506355 | 731434 |
| 506356 | 731434 |
| 506356 | 731469 |
| 506511 | 730435 |
| 506511 | 731142 |

| NRF SERVICES | Valeo |
|---|---|
| 506514 | 730440 |
| 506516 | 731042 |
| 506517 | 731142 |
| 506518 | 732538 |
| 506521 | 731461 |
| 506550 | 730449 |
| 506557 | 731647 |
| 506573 | 819377 |
| 506574 | 732605 |
| 506574 | 883860 |
| 506575 | 819373 |
| 506577 | 819201 |
| 506580 | 883876 |
| 506601 | 883857 |
| 506604 | 883858 |
| 506608 | 883878 |
| 506610 | 730975 |
| 506611 | 730975 |
| 506616 | 734322 |
| 506670 | 730455 |
| 506671 | 731438 |
| 506707 | 730468 |
| 506711 | 819123 |
| 506712 | 730471 |
| 506712 | 731119 |
| 506718 | 731656 |
| 506721 | 731196 |
| 506725 | 732543 |
| 506728 | 819193 |
| 506743 | 734624 |
| 506750 | 731434 |
| 506750 | 734117 |
| 506840 | 731187 |
| 506860 | 731082 |
| 506861 | 730404 |
| 506864 | 731202 |
| 506990 | 810957 |
| 507114 | 730898 |
| 507120 | 730018 |
| 507123 | 810892 |
| 507126 | 810882 |
| 507129 | 730015 |
| 507137 | 810882 |
| 507143 | 810827 |
| 507145 | 810892 |
| 507210 | 810811 |
| 507211 | 883464 |
| 507333 | 810889 |
| 507335 | 883851 |
| 507340 | 810851 |
| 507341 | 883852 |
| 507341 | 883959 |
| 507342 | 883852 |
| 507342 | 883959 |
| 507343 | 810933 |
| 507345 | 730183 |
| 507347 | 883875 |
| 507348 | 816552 |
| 507350 | 730180 |
| 507351 | 730511 |
| 507352 | 730180 |
| 507359 | 730502 |
| 507363 | 730110 |
| 507373 | 731779 |
| 507383 | 731300 |
| 507465 | 816552 |
| 507522 | 731179 |
| 507527 | 732349 |
| 507529 | 732723 |
| 507581 | 730471 |
| 507590 | 731565 |
| 507594 | 731441 |
| 507616 | 734615 |
| 507618 | 819418 |
| 507620 | 732593 |
| 507644 | 731828 |
| 507662 | 810869 |
| 507662 | 819368 |

| NRF SERVICES | Valeo |
|---|---|
| 507665 | 730883 |
| 507665 | 731741 |
| 507676 | 819201 |
| 507722 | 731076 |
| 507722 | 731471 |
| 507728 | 732323 |
| 507913 | 730040 |
| 507913 | 883765 |
| 507920 | 883825 |
| 509500 | 730117 |
| 509501 | 883727 |
| 509502 | 731530 |
| 509503 | 731380 |
| 509504 | 732361 |
| 509504 | 731537 |
| 509505 | 883869 |
| 509506 | 883871 |
| 509510 | 732565 |
| 509510 | 732577 |
| 509511 | 734120 |
| 509511 | 734123 |
| 509512 | 734122 |
| 509513 | 730633 |
| 509514 | 732397 |
| 509515 | 731616 |
| 509516 | 731525 |
| 509517 | 732524 |
| 509518 | 732525 |
| 509519 | 730956 |
| 509520 | 730954 |
| 509521 | 730955 |
| 509522 | 731386 |
| 509523 | 732885 |
| 509524 | 732886 |
| 509525 | 732910 |
| 509526 | 731161 |
| 509527 | 731257 |
| 509527 | 734303 |
| 509528 | 731550 |
| 509528 | 731011 |
| 509529 | 732427 |
| 509529 | 732175 |
| 509529 | 731607 |
| 509529 | 731606 |
| 509530 | 731607 |
| 509532 | 731236 |
| 509532 | 731237 |
| 509532 | 735229 |
| 509533 | 732592 |
| 509534 | 734427 |
| 509534 | 734446 |
| 509558 | 810947 |
| 509558 | 819422 |
| 509588 | 731523 |
| 509589 | 819418 |
| 509596 | 732825 |
| 509601 | 731289 |
| 509602 | 730982 |
| 509614 | 732731 |
| 509615 | 732732 |
| 509625 | 734615 |
| 509638 | 732735 |
| 509641 | 734288 |
| 509653 | 731417 |
| 509689 | 735065 |
| 509696 | 734293 |
| 509697 | 734291 |
| 513331 | 731100 |
| 513331 | 731101 |
| 513495 | 730407 |
| 513497 | 731090 |
| 513508 | 730395 |
| 513960 | 730466 |
| 514009 | 730631 |
| 514009 | 811046 |
| 514133 | 731454 |
| 514321 | 731434 |
| 514435 | 731595 |

| NRF SERVICES | Valeo |
|---|---|
| 514436 | 730858 |
| 514436 | 730856 |
| 514647 | 730994 |
| 514863 | 731372 |
| 515650 | 883869 |
| 515652 | 883871 |
| 516217 | 730566 |
| 516259 | 883875 |
| 516262 | 816654 |
| 516263 | 816657 |
| 516355 | 731458 |
| 516356 | 731459 |
| 516510 | 730436 |
| 516511 | 731461 |
| 516514 | 731139 |
| 516521 | 732326 |
| 516552 | 819119 |
| 516573 | 819387 |
| 516574 | 819376 |
| 516611 | 883877 |
| 516658 | 731462 |
| 516671 | 731675 |
| 516705 | 731692 |
| 516706 | 730465 |
| 516708 | 730423 |
| 516708 | 730424 |
| 516712 | 731115 |
| 516728 | 730417 |
| 516840 | 731188 |
| 516842 | 731085 |
| 516861 | 730406 |
| 517101 | 810881 |
| 517129 | 730634 |
| 517129 | 730015 |
| 517322 | 810835 |
| 517340 | 883852 |
| 517340 | 883959 |
| 517588 | 731464 |
| 517590 | 731831 |
| 517662 | 819368 |
| 517722 | 731101 |
| 517903 | 883799 |
| 517914 | 883053 |
| 519500 | 731595 |
| 519501 | 730504 |
| 519504 | 731757 |
| 519505 | 816703 |
| 519510 | 731570 |
| 519510 | 731743 |
| 519513 | 731552 |
| 519516 | 731393 |
| 519517 | 732524 |
| 519517 | 732525 |
| 519522 | 731385 |
| 519524 | 732887 |
| 519525 | 732892 |
| 519525 | 732909 |
| 519532 | 734353 |
| 519533 | 731261 |
| 519534 | 732484 |
| 519534 | 734671 |
| 519558 | 819422 |
| 519588 | 732099 |
| 519589 | 732099 |
| 519596 | 732826 |
| 519602 | 731297 |
| 519689 | 731840 |
| 519697 | 734292 |
| 523485 | 732539 |
| 523485 | 734132 |
| 523495 | 731661 |
| 524651 | 730152 |
| 524863 | 731466 |
| 525650 | 816703 |
| 525651 | 883870 |
| 526217 | 730594 |
| 526352 | 731467 |
| 526356 | 731469 |

| NRF SERVICES | Valeo |
|---|---|
| 526573 | 819377 |
| 526658 | 731462 |
| 526708 | 731095 |
| 526709 | 731124 |
| 526712 | 731106 |
| 526864 | 731670 |
| 527310 | 883463 |
| 527590 | 731830 |
| 529501 | 730505 |
| 529504 | 731755 |
| 529505 | 883820 |
| 529509 | 732365 |
| 529510 | 732565 |
| 529513 | 732051 |
| 534863 | 731472 |
| 535651 | 734415 |
| 535651 | 883727 |
| 535651 | 883869 |
| 536352 | 730430 |
| 536355 | 731434 |
| 536355 | 731473 |
| 536356 | 731474 |
| 536510 | 730436 |
| 536707 | 730470 |
| 536708 | 731095 |
| 536708 | 731698 |
| 536711 | 730423 |
| 536864 | 731202 |
| 539501 | 731271 |
| 539501 | 883727 |
| 539501 | 883870 |
| 539504 | 731756 |
| 539510 | 731570 |
| 544460 | 730114 |
| 545650 | 883819 |
| 545651 | 730946 |
| 545651 | 730947 |
| 546502 | 732326 |
| 546707 | 731135 |
| 546708 | 730430 |
| 546711 | 730469 |
| 555651 | 730948 |
| 556707 | 730471 |
| 556707 | 731119 |
| 556708 | 730429 |
| 566707 | 730472 |
| 586711 | 731098 |
| 590608 | 961149 |
| 590936 | 810947 |
| 591017 | 819384 |
| 591106 | 819389 |
| 591191 | 819388 |
| 596711 | 731097 |

| ORDONEZ | |
|---|---|
| 2060146 | 734292 |
| 2060180 | 734291 |
| 2060181 | 734293 |
| 1020150803 | 735073 |
| 1020411814 | 730956 |
| 1020414809 | 731572 |
| 1020417815 | 816658 |
| 1020418806 | 731380 |
| 1020445808 | 883771 |
| 1020452809 | 816715 |
| 1020472808 | 730368 |
| 1020472808 | 730515 |
| 1020473808 | 731527 |
| 1020646803 | 735074 |
| 1020680815 | 732892 |
| 1020681815 | 732893 |
| 1020682815 | 732895 |
| 1020686809 | 734411 |
| 1020697809 | 731584 |
| 1020700810 | 735068 |
| 1020735815 | 732910 |
| 1020743808 | 732863 |
| 1020744808 | 732862 |

| IAM | Valeo |
|---|---|
| **ORDONEZ** | |
| 1020744808 | 732864 |
| 1020746808 | 732864 |
| 1020771815 | 734366 |
| 1020772815 | 734423 |
| 1020773815 | 732895 |
| 1020773815 | 734338 |
| 1020774815 | 732894 |
| 1020774815 | 734463 |
| 1020808815 | 732910 |
| 1030008825 | 817767 |
| 1030025809 | 817941 |
| 1030066825 | 817767 |
| 1070003825 | 817756 |
| 1070004825 | 818892 |
| 1070006825 | 818891 |
| CR00440 | 731743 |
| CR01640 | 732577 |
| CR01780 | 732517 |
| CR02640 | 732520 |
| CR02740 | 732520 |
| CR02840 | 732534 |
| CR02940 | 732535 |
| CR03240 | 732518 |
| CR03340 | 732565 |
| CR03480 | 731570 |
| CR04040 | 734445 |
| CR10180 | 731570 |
| CR73870 | 732620 |
| CT00841 | 810811 |
| CT01240 | 730635 |
| CT01340 | 730896 |
| CT01340 | 883715 |
| CT01440 | 730897 |
| CT01740 | 730507 |
| CT02040 | 730982 |
| CT02740 | 730508 |
| CT03440 | 730985 |
| CT03540 | 730983 |
| CT03640 | 730984 |
| CT03740 | 731185 |
| CT04441 | 731289 |
| CT04940 | 731181 |
| CT05140 | 731176 |
| CT07640 | 731498 |
| CT07640 | 731528 |
| CT07840 | 731391 |
| CT08040 | 731176 |
| CT08540 | 731181 |
| CT08740 | 731176 |
| CT09480 | 731744 |
| CT09570 | 730958 |
| FE00440 | 811046 |
| FE00540 | 730631 |
| FE00540 | 811047 |
| FE00640 | 883956 |
| FE00740 | 730114 |
| FE00840 | 730116 |
| FE00940 | 730124 |
| FE00940 | 819176 |
| FE01140 | 730484 |
| FE01240 | 730483 |
| FE01340 | 730857 |
| FE10240 | 883954 |
| FT00760 | 883799 |
| FT01540 | 883812 |
| FT01540 | 883827 |
| FT01640 | 883813 |
| FT01740 | 883825 |
| FT02140 | 811385 |
| FT02140 | 883811 |
| IV10340 | 816647 |
| IV10640 | 816649 |
| IV30900 | 731572 |
| IV72270 | 817941 |
| OP00340 | 883767 |
| OP00540 | 883858 |
| OP00640 | 883771 |
| OP00840 | 730993 |

| IAM | Valeo |
|---|---|
| **ORDONEZ** | |
| OP00940 | 731013 |
| OP00940 | 731178 |
| OP01040 | 730975 |
| PA00143 | 730368 |
| PA00143 | 730515 |
| PA02540 | 816555 |
| PA02540 | 816700 |
| PA02640 | 731186 |
| PA02640 | 731530 |
| PA02740 | 810919 |
| PA04740 | 734760 |
| PA05740 | 734336 |
| PA05840 | 732492 |
| PA06840 | 734411 |
| PE02540 | 810881 |
| PE08241 | 730015 |
| PE08440 | 810827 |
| PE08540 | 730018 |
| PE09240 | 730366 |
| PE09240 | 730372 |
| PE14842 | 810892 |
| RE01440 | 730140 |
| RE02440 | 730181 |
| RE02440 | 816658 |
| RE02540 | 730183 |
| RE02540 | 730502 |
| RE06130 | 730180 |
| RN00240 | 810851 |
| RN03260 | 810843 |
| RN05140 | 810835 |
| RN06943 | 810927 |
| RN07240 | 883463 |
| RN08140 | 730140 |
| RN08840 | 810889 |
| RN08940 | 883851 |
| ST03140 | 811392 |
| ST03140 | 883053 |
| ST05140 | 730542 |
| ST05240 | 730948 |
| ST05340 | 730945 |
| ST05340 | 731266 |
| ST05440 | 730946 |
| ST05540 | 730947 |
| ST05640 | 730945 |
| ST05640 | 731266 |
| ST14740 | 883958 |
| ST14840 | 883921 |
| ST14940 | 730542 |
| VW00140 | 883727 |
| VW00240 | 883820 |
| VW00380 | 730956 |
| **QUINTON HAZELL** | |
| QER1000 | 883863 |
| QER1004 | 730360 |
| QER1005 | 819259 |
| QER1008 | 731422 |
| QER1009 | 731503 |
| QER1010 | 730349 |
| QER1011 | 819260 |
| QER1012 | 730119 |
| QER1013 | 731215 |
| QER1014 | 730172 |
| QER1016 | 810947 |
| QER1016 | 819422 |
| QER1018 | 732593 |
| QER1019 | 730365 |
| QER1020 | 731509 |
| QER1021 | 730365 |
| QER1023 | 819418 |
| QER1025 | 819397 |
| QER1027 | 883774 |
| QER1028 | 883773 |
| QER1029 | 883686 |
| QER1030 | 883715 |
| QER1031 | 883464 |
| QER1032 | 816554 |
| QER1033 | 819428 |

| IAM | Valeo |
|---|---|
| **QUINTON HAZELL** | |
| QER1035 | 730982 |
| QER1036 | 730507 |
| QER1036 | 734454 |
| QER1037 | 731289 |
| QER1038 | 810811 |
| QER1039 | 730896 |
| QER1040 | 883866 |
| QER1041 | 730897 |
| QER1045 | 816715 |
| QER1046 | 816716 |
| QER1049 | 730491 |
| QER1050 | 816706 |
| QER1051 | 961149 |
| QER1054 | 731010 |
| QER1055 | 730985 |
| QER1056 | 730927 |
| QER1058 | 730960 |
| QER1062 | 730632 |
| QER1066 | 731297 |
| QER1070 | 731020 |
| QER1072 | 731853 |
| QER1076 | 730981 |
| QER1077 | 811387 |
| QER1078 | 811073 |
| QER1081 | 816707 |
| QER1082 | 811071 |
| QER1083 | 811070 |
| QER1084 | 811069 |
| QER1085 | 810949 |
| QER1085 | 811073 |
| QER1086 | 811067 |
| QER1088 | 730991 |
| QER1089 | 730990 |
| QER1090 | 730976 |
| QER1091 | 731562 |
| QER1094 | 811386 |
| QER1095 | 883811 |
| QER1096 | 883825 |
| QER1098 | 883812 |
| QER1099 | 883813 |
| QER1100 | 730124 |
| QER1101 | 883956 |
| QER1102 | 730483 |
| QER1103 | 730484 |
| QER1104 | 731550 |
| QER1105 | 730116 |
| QER1107 | 730117 |
| QER1107 | 731595 |
| QER1108 | 730117 |
| QER1109 | 730857 |
| QER1111 | 730858 |
| QER1112 | 731595 |
| QER1114 | 730123 |
| QER1117 | 734774 |
| QER1118 | 730590 |
| QER1120 | 730856 |
| QER1124 | 819193 |
| QER1125 | 731634 |
| QER1126 | 731471 |
| QER1127 | 731634 |
| QER1129 | 730430 |
| QER1130 | 731076 |
| QER1130 | 731101 |
| QER1130 | 731471 |
| QER1130 | 732323 |
| QER1131 | 731101 |
| QER1132 | 731434 |
| QER1133 | 811348 |
| QER1135 | 734256 |
| QER1136 | 734267 |
| QER1138 | 811392 |
| QER1139 | 811381 |
| QER1140 | 730317 |
| QER1144 | 819176 |
| QER1149 | 730440 |
| QER1149 | 732538 |
| QER1150 | 730440 |
| QER1150 | 732538 |

| IAM | Valeo |
|---|---|
| **QUINTON HAZELL** | |
| QER1151 | 732326 |
| QER1152 | 731461 |
| QER1154 | 731036 |
| QER1158 | 731187 |
| QER1160 | 731090 |
| QER1163 | 730408 |
| QER1166 | 731437 |
| QER1170 | 731466 |
| QER1171 | 732538 |
| QER1172 | 734262 |
| QER1173 | 730436 |
| QER1175 | 883860 |
| QER1176 | 810869 |
| QER1179 | 730883 |
| QER1179 | 731741 |
| QER1180 | 883876 |
| QER1190 | 731807 |
| QER1193 | 731646 |
| QER1194 | 730449 |
| QER1204 | 730454 |
| QER1205 | 731451 |
| QER1206 | 731462 |
| QER1207 | 731647 |
| QER1208 | 731085 |
| QER1211 | 731090 |
| QER1212 | 731193 |
| QER1213 | 731087 |
| QER1214 | 731147 |
| QER1216 | 730404 |
| QER1217 | 730406 |
| QER1218 | 731664 |
| QER1221 | 732718 |
| QER1222 | 734671 |
| QER1228 | 819388 |
| QER1229 | 819389 |
| QER1230 | 883880 |
| QER1232 | 730396 |
| QER1233 | 731217 |
| QER1234 | 730993 |
| QER1235 | 731174 |
| QER1237 | 883877 |
| QER1238 | 883878 |
| QER1239 | 731022 |
| QER1240 | 883857 |
| QER1241 | 883771 |
| QER1242 | 883858 |
| QER1243 | 730975 |
| QER1244 | 731022 |
| QER1245 | 731013 |
| QER1246 | 731179 |
| QER1247 | 883920 |
| QER1248 | 883767 |
| QER1249 | 731170 |
| QER1250 | 734623 |
| QER1251 | 730423 |
| QER1253 | 734117 |
| QER1253 | 731434 |
| QER1255 | 816555 |
| QER1256 | 810892 |
| QER1259 | 810915 |
| QER1260 | 810881 |
| QER1261 | 730015 |
| QER1264 | 730630 |
| QER1265 | 730372 |
| QER1266 | 730569 |
| QER1268 | 730575 |
| QER1270 | 730515 |
| QER1271 | 730953 |
| QER1273 | 730040 |
| QER1274 | 730040 |
| QER1275 | 811380 |
| QER1278 | 883765 |
| QER1279 | 731186 |
| QER1280 | 731176 |
| QER1282 | 810919 |
| QER1283 | 730506 |
| QER1284 | 730512 |
| QER1288 | 730018 |

| IAM | Valeo |
|---|---|
| **QUINTON HAZELL** | |
| QER1289 | 810882 |
| QER1290 | 810882 |
| QER1292 | 730898 |
| QER1293 | 810827 |
| QER1298 | 816700 |
| QER1299 | 730634 |
| QER1300 | 810933 |
| QER1300 | 883282 |
| QER1302 | 883463 |
| QER1303 | 731162 |
| QER1304 | 731128 |
| QER1305 | 810843 |
| QER1306 | 731161 |
| QER1309 | 819431 |
| QER1310 | 730184 |
| QER1311 | 810835 |
| QER1312 | 810912 |
| QER1313 | 730510 |
| QER1315 | 730499 |
| QER1317 | 810889 |
| QER1318 | 730180 |
| QER1318 | 730511 |
| QER1321 | 730944 |
| QER1322 | 730140 |
| QER1323 | 816552 |
| QER1324 | 883875 |
| QER1326 | 816658 |
| QER1327 | 730551 |
| QER1328 | 816657 |
| QER1329 | 816654 |
| QER1330 | 816655 |
| QER1331 | 883959 |
| QER1332 | 810851 |
| QER1333 | 731378 |
| QER1334 | 731380 |
| QER1335 | 731379 |
| QER1336 | 730940 |
| QER1341 | 730540 |
| QER1342 | 730183 |
| QER1343 | 730502 |
| QER1344 | 730973 |
| QER1345 | 730633 |
| QER1347 | 810888 |
| QER1348 | 730510 |
| QER1349 | 883851 |
| QER1352 | 883727 |
| QER1355 | 730947 |
| QER1356 | 730948 |
| QER1357 | 883958 |
| QER1358 | 730542 |
| QER1359 | 883921 |
| QER1362 | 730591 |
| QER1364 | 730565 |
| QER1364 | 732758 |
| QER1366 | 730565 |
| QER1367 | 732759 |
| QER1369 | 731463 |
| QER1370 | 730456 |
| QER1371 | 730457 |
| QER1376 | 731153 |
| QER1379 | 734166 |
| QER1380 | 731115 |
| QER1381 | 731098 |
| QER1383 | 730471 |
| QER1384 | 731119 |
| QER1385 | 731095 |
| QER1391 | 731106 |
| QER1392 | 731095 |
| QER1393 | 731831 |
| QER1394 | 731565 |
| QER1395 | 731441 |
| QER1396 | 731441 |
| QER1397 | 732543 |
| QER1398 | 730468 |
| QER1398 | 732561 |
| QER1399 | 883727 |
| QER14&4 | 731817 |
| QER1401 | 883871 |

| IAM | Valeo |
|---|---|
| **QUINTON HAZELL** | |
| QER1403 | 883718 |
| QER1403 | 883819 |
| QER1404 | 883869 |
| QER1406 | 883818 |
| QER1409 | 883870 |
| QER141 | 810836 |
| QER1411 | 731411 |
| QER1412 | 730955 |
| QER1412 | 730503 |
| QER1413 | 730504 |
| QER1414 | 731025 |
| QER1415 | 730505 |
| QER1417 | 730954 |
| QER1418 | 730956 |
| QER1420 | 732435 |
| QER1421 | 732397 |
| QER1422 | 731265 |
| QER1423 | 731127 |
| QER1424 | 731005 |
| QER1425 | 731007 |
| QER1426 | 731008 |
| QER1431 | 810957 |
| QER1433 | 811047 |
| QER1433 | 730631 |
| QER1434 | 731243 |
| QER1440 | 811010 |
| QER1443 | 816710 |
| QER1445 | 731251 |
| qer1446 | 731591 |
| QER1447 | 811389 |
| QER1449 | 810836 |
| QER1450 | 731185 |
| QER1453 | 731202 |
| QER1453 | 731665 |
| QER1455 | 732405 |
| QER1456 | 810955 |
| QER1460 | 731271 |
| QER1463 | 731211 |
| QER1465 | 731816 |
| QER1466 | 731815 |
| QER1467 | 731818 |
| QER1468 | 731412 |
| QER1469 | 731820 |
| QER1470 | 734290 |
| QER1471 | 731734 |
| QER1472 | 731735 |
| QER1473 | 732003 |
| QER1476 | 730971 |
| QER1478 | 731306 |
| QER1479 | 731302 |
| QER1479 | 731303 |
| QER1480 | 731304 |
| QER1481 | 731304 |
| QER1481 | 734239 |
| QER1482 | 731300 |
| QER1484 | 732456 |
| QER1495 | 810887 |
| QER1497 | 811068 |
| QER1500 | 730572 |
| QER1501 | 731538 |
| QER1502 | 730958 |
| QER1505 | 731498 |
| QER1506 | 810954 |
| QER1507 | 730494 |
| QER1508 | 731009 |
| QER1509 | 730957 |
| QER1510 | 730997 |
| QER1511 | 730999 |
| QER1511 | 731611 |
| QER1512 | 730999 |
| QER1513 | 731166 |
| QER1514 | 731165 |
| QER1515 | 730317 |
| QER1515 | 731177 |
| QER1516 | 731298 |
| QER1517 | 883053 |
| QER1518 | 730309 |
| QER1521 | 731168 |

| QUINTON HAZELL | Valeo |
|---|---|
| QER1522 | 732787 |
| QER1523 | 731525 |
| QER1524 | 731611 |
| QER1525 | 731295 |
| QER1526 | 731296 |
| QER1527 | 731570 |
| QER1529 | 731181 |
| QER1530 | 731381 |
| QER1531 | 731382 |
| QER1532 | 731526 |
| QER1533 | 731574 |
| QER1534 | 731575 |
| QER1536 | 730548 |
| QER1537 | 730549 |
| QER1538 | 731129 |
| QER1539 | 731529 |
| QER1540 | 730946 |
| QER1541 | 731032 |
| QER1542 | 731268 |
| QER1543 | 731257 |
| QER1544 | 730519 |
| QER1545 | 732705 |
| QER1545 | 731562 |
| QER1546 | 730520 |
| QER1547 | 731977 |
| QER1548 | 730980 |
| QER1549 | 731173 |
| QER1550 | 730181 |
| QER1551 | 730182 |
| QER1552 | 730969 |
| QER1553 | 816656 |
| QER1566 | 734755 |
| QER1567 | 731537 |
| QER1567 | 732361 |
| QER1568 | 731755 |
| QER1574 | 730361 |
| QER1575 | 730363 |
| QER1585 | 731508 |
| QER1586 | 819395 |
| QER1588 | 732198 |
| QER1592 | 819412 |
| QER1592 | 731520 |
| QER1593 | 734289 |
| QER1593 | 819414 |
| QER1595 | 731520 |
| QER1596 | 734615 |
| QER1602 | 734301 |
| QER1606 | 731531 |
| QER1607 | 730498 |
| QER1608 | 731528 |
| QER1609 | 731527 |
| QER1610 | 731530 |
| QER1611 | 731527 |
| QER1614 | 732688 |
| QER1615 | 731981 |
| QER1616 | 731972 |
| QER1617 | 731974 |
| QER1618 | 731973 |
| QER1619 | 731975 |
| QER1620 | 731976 |
| QER1626 | 731611 |
| QER1626 | 730995 |
| QER1626 | 730997 |
| QER1627 | 731300 |
| QER1630 | 731617 |
| QER1631 | 731736 |
| QER1633 | 732003 |
| QER1634 | 731386 |
| QER1635 | 731387 |
| QER1636 | 732797 |
| QER1636 | 731385 |
| QER1637 | 731992 |
| QER1638 | 734772 |
| QER1640 | 730563 |
| QER1645 | 730566 |
| QER1649 | 731261 |
| QER1650 | 732592 |
| QER1651 | 730124 |

| QUINTON HAZELL | Valeo |
|---|---|
| QER1652 | 731492 |
| QER1653 | 731779 |
| QER1654 | 731782 |
| QER1655 | 734862 |
| QER1656 | 816647 |
| QER1657 | 816647 |
| QER1658 | 816649 |
| QER1659 | 883787 |
| QER1660 | 883428 |
| QER1662 | 731269 |
| QER1662 | 731271 |
| QER1663 | 731607 |
| QER1663 | 731606 |
| QER1665 | 731266 |
| QER1666 | 731267 |
| QER1666 | 730955 |
| QER1667 | 883849 |
| QER1668 | 731006 |
| QER1670 | 730955 |
| QER1670 | 731267 |
| QER1670 | 731268 |
| QER1671 | 883720 |
| QER1674 | 731178 |
| QER1675 | 734271 |
| QER1676 | 732606 |
| QER1680 | 731421 |
| QER1681 | 730994 |
| QER1681 | 734429 |
| QER1682 | 732723 |
| QER1683 | 732551 |
| QER1684 | 732724 |
| QER1685 | 732549 |
| QER1686 | 732548 |
| QER1687 | 732550 |
| QER1688 | 735229 |
| QER1689 | 731236 |
| QER1690 | 731237 |
| QER1691 | 731237 |
| QER1693 | 731839 |
| QER1694 | 731840 |
| QER1696 | 731842 |
| QER1697 | 731843 |
| QER1699 | 731393 |
| QER1699 | 731847 |
| QER1700 | 731393 |
| QER1701 | 731848 |
| QER1701 | 732348 |
| QER1702 | 731847 |
| QER1704 | 731846 |
| QER1706 | 732587 |
| QER1707 | 732587 |
| QER1708 | 732587 |
| QER1711 | 732446 |
| QER1712 | 735231 |
| QER1713 | 732462 |
| QER1714 | 731291 |
| QER1715 | 731292 |
| QER1716 | 731293 |
| QER1717 | 731293 |
| QER1717 | 731294 |
| QER1718 | 731552 |
| QER1719 | 732442 |
| QER1720 | 730229 |
| QER1721 | 732472 |
| QER1723 | 734674 |
| QER1724 | 732471 |
| QER1729 | 732460 |
| QER1732 | 819368 |
| QER1733 | 819377 |
| QER1734 | 730344 |
| QER1736 | 819201 |
| QER1737 | 732591 |
| QER1738 | 819387 |
| QER1739 | 732605 |
| QER1742 | 730344 |
| QER1746 | 731804 |
| QER1747 | 731805 |
| QER1748 | 732450 |

| QUINTON HAZELL | Valeo |
|---|---|
| QER1749 | 731808 |
| QER1751 | 734799 |
| QER1752 | 732454 |
| QER1755 | 732596 |
| QER1765 | 732484 |
| QER1766 | 732484 |
| QER1768 | 732524 |
| QER1772 | 731212 |
| QER1776 | 732120 |
| QER1777 | 732121 |
| QER1785 | 732110 |
| QER1786 | 732108 |
| QER1787 | 734405 |
| QER1787 | 732410 |
| QER1794 | 734406 |
| QER1795 | 731568 |
| QER1798 | 731391 |
| QER1799 | 731389 |
| QER1800 | 730983 |
| QER1803 | 731744 |
| QER1804 | 731743 |
| QER1806 | 730575 |
| QER1807 | 730974 |
| QER1810 | 731384 |
| QER1811 | 731383 |
| QER1812 | 731584 |
| QER1813 | 731586 |
| QER1815 | 730934 |
| QER1817 | 731584 |
| QER1822 | 731180 |
| QER1823 | 810927 |
| QER1824 | 732051 |
| QER1824 | 810926 |
| QER1825 | 810995 |
| QER1826 | 810843 |
| QER1830 | 730055 |
| QER1833 | 810938 |
| QER1843 | 730185 |
| QER1844 | 731378 |
| QER1845 | 731910 |
| QER1846 | 811073 |
| QER1848 | 731073 |
| QER1850 | 734631 |
| QER1851 | 734794 |
| QER1852 | 734795 |
| QER1855 | 734806 |
| QER1857 | 730366 |
| QER1858 | 730368 |
| QER1862 | 734427 |
| QER1862 | 734446 |
| QER1865 | 819415 |
| QER1871 | 735065 |
| QER1872 | 732589 |
| QER1875 | 732549 |
| QER1876 | 734429 |
| QER1877 | 732524 |
| QER1879 | 810956 |
| QER1885 | 732316 |
| QER1887 | 732819 |
| QER1888 | 732011 |
| QER1891 | 731283 |
| QER1894 | 731283 |
| QER1895 | 732012 |
| QER1896 | 732013 |
| QER1897 | 732248 |
| QER1898 | 731756 |
| QER1899 | 734752 |
| QER1900 | 734276 |
| QER1901 | 734276 |
| QER1902 | 734276 |
| QER1903 | 734394 |
| QER1905 | 731723 |
| QER1906 | 732564 |
| QER1907 | 732563 |
| QER1908 | 732887 |
| QER1909 | 732909 |
| QER1910 | 734760 |
| QER1912 | 732617 |

| QUINTON HAZELL | Valeo |
|---|---|
| QER1913 | 732618 |
| QER1914 | 732535 |
| QER1915 | 732620 |
| QER1916 | 732517 |
| QER1917 | 732577 |
| QER1918 | 732534 |
| QER1919 | 734250 |
| QER1920 | 731979 |
| QER1921 | 732503 |
| QER1922 | 732623 |
| QER1924 | 811071 |
| QER1925 | 732005 |
| QER1926 | 732007 |
| QER1927 | 732147 |
| QER1928 | 732578 |
| QER1929 | 732578 |
| QER1930 | 734224 |
| QER1931 | 732913 |
| QER1932 | 732913 |
| QER1935 | 734624 |
| QER1936 | 734255 |
| QER1937 | 732488 |
| QER1938 | 734950 |
| QER1939 | 734261 |
| QER1940 | 731572 |
| QER1941 | 731374 |
| QER1943 | 734120 |
| QER1945 | 734123 |
| QER1949 | 732451 |
| QER1952 | 732315 |
| QER1954 | 734807 |
| QER1955 | 732529 |
| QER1956 | 732528 |
| QER1958 | 734322 |
| QER1960 | 732032 |
| QER1961 | 732349 |
| QER1962 | 732520 |
| QER1964 | 732567 |
| QER1965 | 732598 |
| QER1966 | 732885 |
| QER1967 | 732886 |
| QER1968 | 732910 |
| QER1969 | 734285 |
| QER1970 | 732051 |
| QER1970 | 732819 |
| QER1971 | 732338 |
| QER1972 | 732389 |
| QER1972 | 732338 |
| QER1973 | 732474 |
| QER1974 | 732387 |
| QER1975 | 732720 |
| QER1976 | 732071 |
| QER1977 | 732072 |
| QER1978 | 732559 |
| QER1979 | 732049 |
| QER1980 | 732050 |
| QER1980 | 732917 |
| QER1981 | 732544 |
| QER1983 | 732544 |
| QER1984 | 731161 |
| QER1985 | 732608 |
| QER1987 | 732798 |
| QER1988 | 734714 |
| QER1989 | 731728 |
| QER1991 | 732479 |
| QER1992 | 734848 |
| QER1994 | 732750 |
| QER1996 | 732421 |
| QER1998 | 732614 |
| QER1999 | 731569 |
| QER2001 | 734172 |
| QER2003 | 731606 |
| QER2003 | 732175 |
| QER2005 | 734606 |
| QER2006 | 731616 |
| QER2007 | 732525 |
| QER2009 | 732365 |
| QER2010 | 732175 |

| QUINTON HAZELL | Valeo |
|---|---|
| QER2013 | 732731 |
| QER2014 | 732732 |
| QER2015 | 732735 |
| QER2016 | 734114 |
| QER2017 | 731980 |
| QER2019 | 732940 |
| QER2020 | 732578 |
| QER2020 | 734225 |
| QER2021 | 734225 |
| QER2022 | 734220 |
| QER2023 | 732824 |
| QER2024 | 734480 |
| QER2025 | 732525 |
| QER2026 | 732584 |
| QER2027 | 732582 |
| QER2028 | 732580 |
| QER2030 | 732474 |
| QER2031 | 732827 |
| QER2032 | 732492 |
| QER2033 | 734336 |
| QER2034 | 734282 |
| QER2035 | 734280 |
| QER2036 | 734279 |
| QER2037 | 732812 |
| QER2038 | 732893 |
| QER2039 | 732892 |
| QER2040 | 732891 |
| QER2041 | 732890 |
| QER2042 | 731530 |
| QER2043 | 732794 |
| QER2044 | 732788 |
| QER2045 | 732854 |
| QER2047 | 732698 |
| QER2048 | 732696 |
| QER2049 | 732694 |
| QER2052 | 732599 |
| QER2054 | 732505 |
| QER2055 | 732910 |
| QER2057 | 734354 |
| QER2058 | 731605 |
| QER2059 | 732910 |
| QER2061 | 732523 |
| QER2062 | 732565 |
| QER2063 | 732621 |
| QER2064 | 732692 |
| QER2065 | 732721 |
| QER2066 | 732807 |
| QER2067 | 732828 |
| QER2068 | 732830 |
| QER2069 | 732831 |
| QER2070 | 732846 |
| QER2070 | 732853 |
| QER2071 | 732846 |
| QER2071 | 732853 |
| QER2072 | 732946 |
| QER2073 | 732873 |
| QER2074 | 732874 |
| QER2075 | 732881 |
| QER2076 | 732892 |
| QER2077 | 732894 |
| QER2078 | 732895 |
| QER2079 | 732896 |
| QER2080 | 732902 |
| QER2081 | 732908 |
| QER2083 | 731611 |
| QER2084 | 731611 |
| QER2085 | 732930 |
| QER2086 | 732831 |
| QER2087 | 731611 |
| QER2088 | 731527 |
| QER2089 | 732906 |
| QER2091 | 732895 |
| QER2092 | 734284 |
| QER2093 | 734284 |
| QER2095 | 732737 |
| QER2097 | 734828 |
| QER2098 | 732930 |
| QER2099 | 732517 |

| QUINTON HAZELL | Valeo |
|---|---|
| QER2100 | 734456 |
| QER2102 | 734278 |
| QER2103 | 734281 |
| QER2107 | 734761 |
| QER2108 | 732437 |
| QER2110 | 731561 |
| QER2110 | 731591 |
| QER2111 | 731559 |
| QER2112 | 734733 |
| QER2113 | 734283 |
| QER2115 | 732199 |
| QER2117 | 734277 |
| QER2118 | 734896 |
| QER2119 | 731766 |
| QER2120 | 819418 |
| QER2121 | 731514 |
| QER2122 | 731725 |
| QER2123 | 731523 |
| QER2127 | 731531 |
| QER2128 | 732704 |
| QER2130 | 735157 |
| QER2131 | 734251 |
| QER2132 | 734248 |
| QER2133 | 734762 |
| QER2134 | 734767 |
| QER2136 | 731592 |
| QER2137 | 731593 |
| QER2139 | 732218 |
| QER2140 | 734221 |
| QER2141 | 732557 |
| QER2142 | 732557 |
| QER2143 | 731592 |
| QER2145 | 732789 |
| QER2146 | 734229 |
| QER2148 | 732924 |
| QER2149 | 732925 |
| QER2150 | 734228 |
| QER2151 | 735172 |
| QER2152 | 735172 |
| QER2153 | 735171 |
| QER2154 | 735171 |
| QER2155 | 734692 |
| QER2158 | 734228 |
| QER2159 | 734361 |
| QER2160 | 734363 |
| QER2162 | 732685 |
| QER2165 | 731282 |
| QER2166 | 731281 |
| QER2167 | 731276 |
| QER2168 | 731278 |
| QER2169 | 734236 |
| QER2171 | 734237 |
| QER2172 | 734238 |
| QER2173 | 734235 |
| QER2174 | 734364 |
| QER2175 | 734288 |
| QER2175 | 734699 |
| QER2176 | 734273 |
| QER2177 | 734272 |
| QER2178 | 734286 |
| QER2179 | 734292 |
| QER2180 | 734292 |
| QER2181 | 734293 |
| QER2182 | 734291 |
| QER2183 | 730856 |
| QER2184 | 730559 |
| QER2185 | 732497 |
| QER2186 | 734274 |
| QER2188 | 734723 |
| QER2190 | 734716 |
| QER2192 | 734259 |
| QER2194 | 734266 |
| QER2198 | 734903 |
| QER2201 | 734408 |
| QER2202 | 734408 |
| QER2203 | 734231 |
| QER2209 | 734953 |
| QER2210 | 734263 |

| IAM | Valeo |
|---|---|
| **QUINTON HAZELL** | |
| QER2217 | **732399** |
| QER2219 | **731491** |
| QER2221 | **734122** |
| QER2222 | **732726** |
| QER2224 | **734119** |
| QER2225 | **735053** |
| QER2226 | **734484** |
| QER2227 | **734410** |
| QER2228 | **734689** |
| QER2229 | **732454** |
| QER2232 | **734749** |
| QER2233 | **734669** |
| QER2235 | **734803** |
| QER2237 | **732471** |
| QER2239 | **734801** |
| QER2241 | **732740** |
| QER2241 | **732741** |
| QER2241 | **732743** |
| QER2242 | **732736** |
| QER2243 | **734805** |
| QER2245 | **731291** |
| QER2246 | **732446** |
| QER2247 | **731294** |
| QER2248 | **732450** |
| QER2252 | **734329** |
| QER2253 | **732539** |
| QER2253 | **732327** |
| QER2254 | **732613** |
| QER2255 | **734129** |
| QEr2256 | **734143** |
| QER2258 | **731670** |
| QER2259 | **734708** |
| QER2260 | **734246** |
| QER2263 | **732607** |
| QER2264 | **734388** |
| QER2265 | **732550** |
| QER2266 | **732825** |
| QER2267 | **732826** |
| QER2270 | **732879** |
| QER2271 | **732876** |
| QER2272 | **732877** |
| QER2273 | **734385** |
| QER2274 | **730984** |
| QER2275 | **732904** |
| QER2277 | **732886** |
| QER2278 | **732894** |
| QER2279 | **734338** |
| QER2280 | **734452** |
| QER2281 | **732910** |
| QER2282 | **732910** |
| QER2283 | **732885** |
| QER2284 | **732887** |
| QER2285 | **732893** |
| QER2286 | **732891** |
| QER2287 | **732890** |
| QER2288 | **732908** |
| QER2289 | **732906** |
| QER2290 | **732896** |
| QER2291 | **734728** |
| QER2292 | **732387** |
| QER2293 | **732717** |
| QER2294 | **732817** |
| QER2296 | **732866** |
| QER2298 | **732917** |
| QER2299 | **732918** |
| QER2299 | **732919** |
| QER2301 | **731820** |
| QER2302 | **731076** |
| QER2303 | **734829** |
| QER2304 | **731817** |
| QER2305 | **732123** |
| QER2306 | **732122** |
| QER2307 | **734212** |
| QER2309 | **734917** |
| QER2310 | **734171** |
| QER2311 | **735073** |
| QER2313 | **734170** |
| QER2315 | **732950** |

| IAM | Valeo |
|---|---|
| **QUINTON HAZELL** | |
| QER2316 | **732951** |
| QER2317 | **734845** |
| QER2318 | **735214** |
| QER2319 | **734205** |
| QER2320 | **734182** |
| QER2321 | **734488** |
| QER2324 | **734840** |
| QER2325 | **732413** |
| QER2326 | **734711** |
| QER2327 | **734401** |
| QER2328 | **734840** |
| QER2329 | **730471** |
| QER2330 | **730468** |
| QER2331 | **731441** |
| QER2332 | **732361** |
| QER2335 | **731757** |
| QER2336 | **732963** |
| QER2337 | **734269** |
| QER2338 | **734268** |
| QER2339 | **733074** |
| QER2341 | **732863** |
| QER2342 | **732864** |
| QER2343 | **732862** |
| QER2344 | **732863** |
| QER2344 | **733062** |
| QER2345 | **732864** |
| QER2346 | **731271** |
| QER2347 | **731271** |
| QER2348 | **731270** |
| QER2350 | **883727** |
| QER2352 | **732790** |
| QER2353 | **732710** |
| QER2355 | **734741** |
| QER2356 | **734335** |
| QER2357 | **734332** |
| QER2359 | **732872** |
| QER2361 | **734333** |
| QER2362 | **732785** |
| QER2362 | **732790** |
| QER2363 | **732845** |
| QER2364 | **732786** |
| QER2366 | **730945** |
| QER2366 | **731266** |
| QER2367 | **734739** |
| QER2368 | **732864** |
| QER2370 | **734855** |
| QER2375 | **732372** |
| QER2376 | **732722** |
| QER2377 | **735021** |
| QER2379 | **734252** |
| QER2380 | **732851** |
| QER2381 | **734459** |
| QER2382 | **734457** |
| QER2384 | **734932** |
| QER2385 | **734458** |
| QER2386 | **732923** |
| QER2387 | **732913** |
| QER2388 | **734362** |
| QER2389 | **735040** |
| QER2390 | **735041** |
| QER2392 | **732557** |
| QER2393 | **735042** |
| QER2396 | **732948** |
| QER2399 | **735167** |
| QER2400 | **734319** |
| QER2401 | **734320** |
| QER2402 | **734321** |
| QER2403 | **734392** |
| QER2404 | **734699** |
| QER2405 | **735043** |
| QER2406 | **732626** |
| QER2407 | **732625** |
| QER2409 | **735271** |
| QER2413 | **734784** |
| QER2415 | **731572** |
| QER2416 | **734449** |
| QER2417 | **734448** |
| QER2418 | **732312** |

| IAM | Valeo |
|---|---|
| **QUINTON HAZELL** | |
| QER2426 | **734876** |
| QER2427 | **734877** |
| QER2428 | **734378** |
| QER2429 | **734379** |
| QER2430 | **734328** |
| QER2431 | **734327** |
| QER2432 | **734326** |
| QER2437 | **735055** |
| QER2438 | **735056** |
| QER2441 | **734446** |
| QER2442 | **734736** |
| QER2442 | **734705** |
| QER2445 | **734729** |
| QER2446 | **734737** |
| QER2448 | **734706** |
| QER2449 | **735061** |
| QER2450 | **735063** |
| QER2451 | **735064** |
| QER2452 | **735081** |
| QER2458 | **734384** |
| QER2460 | **734381** |
| QER2461 | **734382** |
| QER2462 | **734380** |
| QER2463 | **734383** |
| QER2465 | **734464** |
| QER2466 | **734432** |
| QER2467 | **734331** |
| QER2468 | **735080** |
| QER2470 | **734339** |
| QER2471 | **735097** |
| QER2472 | **734386** |
| QER2473 | **730395** |
| QER2474 | **731175** |
| QER2476 | **732930** |
| QER2477 | **735068** |
| QER2479 | **734411** |
| QER2480 | **734281** |
| QER2481 | **732910** |
| QER2482 | **732909** |
| QER2483 | **734346** |
| QER2484 | **734366** |
| QER2485 | **734338** |
| QER2486 | **732880** |
| QER2487 | **732944** |
| QER2488 | **732945** |
| QER2489 | **732930** |
| QER2492 | **732903** |
| QER2493 | **732919** |
| QER2494 | **732960** |
| QER2497 | **731811** |
| QER2498 | **734831** |
| QER2499 | **731267** |
| QER2501 | **734831** |
| QER2502 | **735054** |
| QER2504 | **734213** |
| QER2505 | **735074** |
| QER2506 | **734918** |
| QER2507 | **734162** |
| QER2509 | **731696** |
| QER2511 | **732542** |
| QER2513 | **734206** |
| QER2515 | **734199** |
| QER2516 | **734216** |
| QER2517 | **734842** |
| QER2518 | **734916** |
| QER2520 | **734712** |
| QER2521 | **734397** |
| QER2522 | **735070** |
| QER2523 | **735069** |
| QER2524 | **735072** |
| QER2527 | **734199** |
| QER2534 | **734335** |
| QER2536 | **734418** |
| QER2538 | **734270** |
| QER2540 | **732953** |
| QER2541 | **732952** |
| QER2543 | **734333** |
| QIC101 | **816890** |

| IAM | Valeo |
|---|---|
| **QUINTON HAZELL** | |
| QIC103 | **817632** |
| QIC104 | **817862** |
| QIC105 | **816851** |
| QIC108 | **817760** |
| QIC111 | **818821** |
| QIC114 | **818711** |
| QIC117 | **817637** |
| QIC131 | **817902** |
| QIC132 | **818717** |
| **SERCK COOLING** | |
| 1002005 | **816710** |
| 1002007 | **811010** |
| 1002020 | **731561** |
| 1002026 | **811389** |
| 1002029 | **732012** |
| 1002035 | **811068** |
| 1002038 | **732013** |
| 1002057 | **732248** |
| 1002068 | **732013** |
| 1002069 | **732011** |
| 1002075 | **732505** |
| 1002076 | **731251** |
| 1002076 | **731559** |
| 1002079 | **732696** |
| 1002083 | **734733** |
| 1002084 | **734283** |
| 1002089 | **731283** |
| 1002101 | **735021** |
| 1004086 | **817862** |
| 1004096 | **818794** |
| 2002065 | **731235** |
| 2002078 | **732552** |
| 2002079 | **735222** |
| 2002083 | **732704** |
| 2002084 | **731406** |
| 2002085 | **732757** |
| 2002087 | **732312** |
| 2002091 | **732883** |
| 2002093 | **732757** |
| 2002101 | **735224** |
| 2002120 | **731817** |
| 2002122 | **731811** |
| 2002126 | **732402** |
| 2002137 | **731491** |
| 2002162 | **735052** |
| 2002163 | **732399** |
| 2002164 | **732400** |
| 2004181 | **818826** |
| 2011979 | **730172** |
| 2019047 | **730119** |
| 2019103 | **731215** |
| 2019343 | **731243** |
| 2019700 | **730119** |
| 2029927 | **731811** |
| 2029928 | **731076** |
| 2121971 | **730411** |
| 2141242 | **730595** |
| 2141263 | **730168** |
| 2141382 | **730578** |
| 2141823 | **731406** |
| 2142275 | **731491** |
| 2145091 | **734110** |
| 2146889 | **731235** |
| 2149069 | **732758** |
| 2149069 | **732759** |
| 2149071 | **734354** |
| 2149072 | **731815** |
| 2149075 | **734829** |
| 2149076 | **731076** |
| 2149076 | **731817** |
| 2149122 | **731212** |
| 2149149 | **731215** |
| 2149169 | **731101** |
| 2149169 | **731100** |
| 2149170 | **730172** |
| 2149197 | **732399** |
| 2149199 | **732400** |

| IAM | Valeo |
|---|---|
| **SERCK COOLING** | |
| 2149222 | **731212** |
| 2149233 | **731211** |
| 2149240 | **730591** |
| 2149241 | **730970** |
| 2149242 | **730595** |
| 2149269 | **732402** |
| 2149300 | **731817** |
| 2149310 | **731816** |
| 2149382 | **730578** |
| 2149414 | **731815** |
| 2149416 | **731818** |
| 2149639 | **732759** |
| 2149639 | **732758** |
| 2149710 | **731076** |
| 2149710 | **732323** |
| 2149711 | **731101** |
| 2149845 | **731210** |
| 2149901 | **731629** |
| 2149901 | **731630** |
| 2149904 | **730591** |
| 2149907 | **730595** |
| 2149922 | **731412** |
| 2149932 | **734290** |
| 2149932 | **731820** |
| 2149933 | **734290** |
| 2149936 | **730591** |
| 2149936 | **734290** |
| 2149941 | **730591** |
| 2149941 | **730970** |
| 2149963 | **735052** |
| 2149964 | **730565** |
| 2149964 | **731235** |
| 2149993 | **731211** |
| 2159957 | **734322** |
| 2275601 | **732442** |
| 2279280 | **734668** |
| 2279572 | **731572** |
| 2279595 | **732471** |
| 2279702 | **734749** |
| 2279747 | **816649** |
| 2279859 | **734806** |
| 2279881 | **734674** |
| 2279918 | **816647** |
| 2319021 | **730631** |
| 2319021 | **811047** |
| 2319041 | **811046** |
| 2319041 | **883956** |
| 2319042 | **730842** |
| 2319050 | **730117** |
| 2319050 | **731595** |
| 2319053 | **730117** |
| 2319054 | **730117** |
| 2319180 | **732732** |
| 2319180 | **732731** |
| 2319185 | **732731** |
| 2319185 | **732732** |
| 2319192 | **732735** |
| 2319221 | **730631** |
| 2319221 | **811047** |
| 2319458 | **735046** |
| 2319491 | **734319** |
| 2319560 | **811047** |
| 2319896 | **730858** |
| 2319897 | **730857** |
| 2319902 | **730857** |
| 2319908 | **730856** |
| 2319908 | **731300** |
| 2319929 | **730856** |
| 2319934 | **732735** |
| 2319987 | **734320** |
| 2319987 | **734321** |
| 2319990 | **735045** |
| 2319992 | **734468** |
| 2322397 | **732624** |
| 2322399 | **732625** |
| 2329011 | **730110** |
| 2329060 | **730123** |
| 2329062 | **730566** |

| IAM | Valeo |
|---|---|
| **SERCK COOLING** | |
| 2329064 | **730590** |
| 2329064 | **730594** |
| 2329066 | **730968** |
| 2329067 | **730114** |
| 2329162 | **730594** |
| 2329216 | **734286** |
| 2329260 | **730123** |
| 2329490 | **734286** |
| 2329563 | **734699** |
| 2329576 | **734288** |
| 2329577 | **734287** |
| 2329624 | **731786** |
| 2329740 | **730566** |
| 2329740 | **730968** |
| 2329741 | **730594** |
| 2329879 | **731550** |
| 2329901 | **731257** |
| 2329985 | **731724** |
| 2339240 | **731261** |
| 2339329 | **731085** |
| 2339329 | **732592** |
| 2339385 | **731385** |
| 2339385 | **732797** |
| 2339386 | **731386** |
| 2339387 | **731387** |
| 2339388 | **732791** |
| 2339902 | **731386** |
| 2339903 | **731387** |
| 2339904 | **731387** |
| 2339905 | **734696** |
| 2339906 | **731785** |
| 2349061 | **730563** |
| 2349164 | **734774** |
| 2355532 | **731992** |
| 2355533 | **734772** |
| 2355533 | **731992** |
| 2359010 | **730116** |
| 2359020 | **730116** |
| 2359041 | **883956** |
| 2359042 | **883954** |
| 2359050 | **730484** |
| 2359051 | **730483** |
| 2359107 | **731386** |
| 2359108 | **731387** |
| 2359109 | **731385** |
| 2359164 | **730559** |
| 2359490 | **734273** |
| 2359705 | **734274** |
| 2359784 | **734273** |
| 2359855 | **731734** |
| 2359856 | **731617** |
| 2359857 | **731735** |
| 2359859 | **731736** |
| 2359954 | **731736** |
| 2359954 | **732003** |
| 2359955 | **734392** |
| 2370007 | **819320** |
| 2379062 | **730124** |
| 2379062 | **819176** |
| 2379141 | **730110** |
| 2379142 | **730110** |
| 2379204 | **734292** |
| 2379238 | **730124** |
| 2379240 | **731492** |
| 2379274 | **819176** |
| 2379319 | **734293** |
| 2379418 | **734291** |
| 2379483 | **734862** |
| 2379484 | **731781** |
| 2379485 | **731782** |
| 2379486 | **731779** |
| 2379582 | **734293** |
| 2379714 | **734291** |
| 2379920 | **732497** |
| 2429013 | **731531** |
| 2429097 | **732426** |
| 2429785 | **731723** |
| 2512380 | **734464** |

| IAM | Valeo |
|---|---|
| **SERCK COOLING** | |
| 2512382 | **734331** |
| 2512387 | **734339** |
| 2512388 | **734345** |
| 2512395 | **734302** |
| 2512396 | **734339** |
| 2515261 | **731217** |
| 2519003 | **819389** |
| 2519012 | **730125** |
| 2519013 | **883859** |
| 2519022 | **730152** |
| 2519043 | **730993** |
| 2519119 | **734604** |
| 2519124 | **732724** |
| 2519138 | **883881** |
| 2519186 | **732723** |
| 2519187 | **732724** |
| 2519188 | **732551** |
| 2519189 | **732549** |
| 2519190 | **732548** |
| 2519191 | **732550** |
| 2519208 | **732550** |
| 2519217 | **731178** |
| 2519244 | **732879** |
| 2519246 | **734339** |
| 2519250 | **731842** |
| 2519252 | **730975** |
| 2519255 | **735229** |
| 2519279 | **734353** |
| 2519290 | **731175** |
| 2519290 | **731174** |
| 2519291 | **731174** |
| 2519291 | **731175** |
| 2519298 | **819388** |
| 2519303 | **883856** |
| 2519304 | **883857** |
| 2519306 | **883771** |
| 2519307 | **883767** |
| 2519308 | **883920** |
| 2519322 | **734271** |
| 2519323 | **732032** |
| 2519347 | **883857** |
| 2519349 | **732349** |
| 2519381 | **730396** |
| 2519387 | **731217** |
| 2519401 | **883751** |
| 2519429 | **883751** |
| 2519440 | **731839** |
| 2519452 | **731847** |
| 2519452 | **732347** |
| 2519453 | **732347** |
| 2519458 | **730993** |
| 2519458 | **734429** |
| 2519459 | **730994** |
| 2519459 | **734429** |
| 2519469 | **731237** |
| 2519474 | **883877** |
| 2519474 | **883878** |
| 2519475 | **883878** |
| 2519524 | **734429** |
| 2519524 | **730994** |
| 2519525 | **731525** |
| 2519543 | **731848** |
| 2519543 | **732348** |
| 2519547 | **732606** |
| 2519556 | **730395** |
| 2519559 | **883858** |
| 2519561 | **883858** |
| 2519562 | **883859** |
| 2519640 | **731840** |
| 2519645 | **731421** |
| 2519649 | **731846** |
| 2519694 | **732824** |
| 2519724 | **735229** |
| 2519725 | **732724** |
| 2519728 | **732795** |
| 2519762 | **731170** |
| 2519762 | **734644** |
| 2519770 | **731013** |

| IAM | Valeo |
|---|---|
| **SERCK COOLING** | |
| 2519773 | **731179** |
| 2519823 | **731393** |
| 2519829 | **883880** |
| 2519875 | **732825** |
| 2519876 | **732826** |
| 2519885 | **731237** |
| 2519899 | **732607** |
| 2519903 | **731022** |
| 2519911 | **730125** |
| 2519911 | **734644** |
| 2519914 | **734604** |
| 2519924 | **731170** |
| 2519958 | **734330** |
| 2519959 | **732694** |
| 2519961 | **732940** |
| 2519963 | **732432** |
| 2519964 | **734302** |
| 2519965 | **731178** |
| 2519966 | **734271** |
| 2519968 | **735080** |
| 2519969 | **734464** |
| 2519970 | **734386** |
| 2519975 | **732826** |
| 2519977 | **734606** |
| 2519978 | **732917** |
| 2519979 | **732919** |
| 2519980 | **732549** |
| 2610013 | **732561** |
| 2610022 | **731135** |
| 2610029 | **730471** |
| 2610042 | **732543** |
| 2610043 | **732542** |
| 2610046 | **731692** |
| 2610067 | **731713** |
| 2610082 | **730466** |
| 2610085 | **731441** |
| 2610085 | **732614** |
| 2610095 | **734515** |
| 2610150 | **730465** |
| 2610158 | **734199** |
| 2610160 | **734200** |
| 2610162 | **734199** |
| 2610163 | **734841** |
| 2610164 | **734840** |
| 2610380 | **732416** |
| 2610600 | **732416** |
| 2612344 | **734173** |
| 2612346 | **734175** |
| 2612347 | **734174** |
| 2612348 | **734397** |
| 2612350 | **731441** |
| 2612359 | **735070** |
| 2612360 | **735069** |
| 2619020 | **730469** |
| 2619037 | **731124** |
| 2619039 | **730469** |
| 2619050 | **730469** |
| 2619060 | **730468** |
| 2619062 | **734201** |
| 2619070 | **731114** |
| 2619081 | **734840** |
| 2619100 | **731692** |
| 2619101 | **731716** |
| 2619110 | **731095** |
| 2619113 | **732543** |
| 2619121 | **819123** |
| 2619127 | **731199** |
| 2619130 | **731106** |
| 2619141 | **731095** |
| 2619141 | **731698** |
| 2619160 | **731115** |
| 2619170 | **730471** |
| 2619170 | **731119** |
| 2619200 | **731105** |
| 2619210 | **730470** |
| 2619212 | **731717** |
| 2619213 | **731716** |
| 2619214 | **731717** |

| IAM | Valeo |
|---|---|
| **SERCK COOLING** | |
| 2619283 | **734401** |
| 2619284 | **734490** |
| 2619284 | **734711** |
| 2619300 | **734845** |
| 2619349 | **731684** |
| 2619414 | **731097** |
| 2619421 | **731715** |
| 2619470 | **731830** |
| 2619501 | **731464** |
| 2619540 | **731696** |
| 2619553 | **731441** |
| 2619647 | **731565** |
| 2619708 | **731097** |
| 2619708 | **732542** |
| 2619721 | **731568** |
| 2619731 | **731569** |
| 2619741 | **731098** |
| 2619747 | **731196** |
| 2619760 | **732476** |
| 2619781 | **732950** |
| 2619782 | **732753** |
| 2619783 | **731098** |
| 2619783 | **732951** |
| 2619784 | **732754** |
| 2619784 | **731196** |
| 2619785 | **732476** |
| 2619785 | **734845** |
| 2619789 | **732421** |
| 2619806 | **732476** |
| 2619840 | **731831** |
| 2619845 | **735214** |
| 2619848 | **734488** |
| 2619849 | **734489** |
| 2619852 | **734204** |
| 2619854 | **734192** |
| 2619856 | **732420** |
| 2619858 | **734201** |
| 2619860 | **734466** |
| 2619861 | **734397** |
| 2619863 | **734916** |
| 2619864 | **734842** |
| 2619980 | **734182** |
| 2619981 | **732417** |
| 2619982 | **734181** |
| 2619983 | **734181** |
| 2619984 | **734175** |
| 2619985 | **734174** |
| 2619986 | **731691** |
| 2619987 | **734172** |
| 2619988 | **734182** |
| 2619988 | **734466** |
| 2619990 | **732524** |
| 2619991 | **732413** |
| 2619992 | **732415** |
| 2619993 | **734183** |
| 2619994 | **731688** |
| 2619995 | **731684** |
| 2619997 | **731441** |
| 2619998 | **734850** |
| 2620100 | **731664** |
| 2620100 | **731670** |
| 2620102 | **731662** |
| 2620128 | **731085** |
| 2620140 | **730407** |
| 2620144 | **730407** |
| 2620144 | **731147** |
| 2620149 | **731664** |
| 2620170 | **732589** |
| 2620173 | **732596** |
| 2620205 | **731654** |
| 2622000 | **731187** |
| 2622001 | **731188** |
| 2622810 | **819219** |
| 2624001 | **731187** |
| 2624202 | **731187** |
| 2625000 | **819219** |
| 2625600 | **731085** |
| 2626011 | **732596** |

| IAM | Valeo |
|---|---|
| **SERCK COOLING** | |
| 2629050 | **730404** |
| 2629050 | **730407** |
| 2629052 | **731082** |
| 2629054 | **730408** |
| 2629060 | **734246** |
| 2629070 | **734247** |
| 2629073 | **731090** |
| 2629074 | **731090** |
| 2629077 | **730406** |
| 2629097 | **732718** |
| 2629100 | **732405** |
| 2629158 | **732529** |
| 2629358 | **732528** |
| 2629400 | **734151** |
| 2629410 | **730408** |
| 2629410 | **731147** |
| 2629443 | **734705** |
| 2629443 | **734736** |
| 2629460 | **731657** |
| 2629461 | **731656** |
| 2629485 | **731656** |
| 2629485 | **732484** |
| 2629486 | **732484** |
| 2629486 | **734671** |
| 2629501 | **731202** |
| 2629519 | **734819** |
| 2629602 | **734427** |
| 2629603 | **732596** |
| 2629607 | **734473** |
| 2629615 | **731656** |
| 2629653 | **731087** |
| 2629696 | **734215** |
| 2629697 | **731287** |
| 2629740 | **731674** |
| 2629892 | **731193** |
| 2629919 | **734446** |
| 2629943 | **734708** |
| 2629961 | **734705** |
| 2629961 | **734736** |
| 2629962 | **734729** |
| 2629963 | **731662** |
| 2629964 | **732903** |
| 2629967 | **734155** |
| 2629971 | **734427** |
| 2629975 | **731287** |
| 2629980 | **735063** |
| 2629981 | **735081** |
| 2629985 | **732846** |
| 2630005 | **731437** |
| 2630018 | **730437** |
| 2630019 | **732326** |
| 2630020 | **731142** |
| 2630024 | **731461** |
| 2630025 | **732475** |
| 2630025 | **734121** |
| 2630035 | **731073** |
| 2630036 | **731036** |
| 2630657 | **734265** |
| 2630671 | **731491** |
| 2630674 | **732326** |
| 2630675 | **732475** |
| 2630678 | **735053** |
| 2630679 | **734483** |
| 2630680 | **734484** |
| 2630689 | **734119** |
| 2632178 | **734121** |
| 2635204 | **730436** |
| 2635204 | **731142** |
| 2635206 | **730435** |
| 2635206 | **730437** |
| 2639100 | **731042** |
| 2639100 | **735079** |
| 2639102 | **730440** |
| 2639102 | **732538** |
| 2639103 | **732538** |
| 2639104 | **730440** |
| 2639104 | **732538** |
| 2639107 | **732345** |

| IAM | Valeo |
|---|---|
| **SERCK COOLING** | |
| 2639180 | **732538** |
| 2639203 | **730436** |
| 2639350 | **734120** |
| 2639383 | **734120** |
| 2639384 | **732345** |
| 2639384 | **734195** |
| 2639393 | **731372** |
| 2639403 | **734123** |
| 2639410 | **731372** |
| 2639415 | **731466** |
| 2639420 | **731472** |
| 2639431 | **734122** |
| 2639457 | **731461** |
| 2639482 | **731417** |
| 2639486 | **731472** |
| 2639487 | **731466** |
| 2639488 | **732726** |
| 2639528 | **734627** |
| 2639994 | **734126** |
| 2639995 | **730241** |
| 2639996 | **735079** |
| 2639997 | **734410** |
| 2639998 | **732726** |
| 2639999 | **734263** |
| 2640003 | **730446** |
| 2640004 | **730446** |
| 2640013 | **731649** |
| 2640077 | **734809** |
| 2642073 | **730449** |
| 2642169 | **734198** |
| 2642170 | **735059** |
| 2642171 | **734196** |
| 2642182 | **732748** |
| 2642238 | **819119** |
| 2646155 | **730454** |
| 2646156 | **730454** |
| 2646391 | **730454** |
| 2648540 | **731646** |
| 2648548 | **731642** |
| 2649212 | **731462** |
| 2649212 | **734138** |
| 2649213 | **731462** |
| 2649261 | **732613** |
| 2649451 | **734128** |
| 2649556 | **731054** |
| 2649558 | **731647** |
| 2649567 | **731649** |
| 2649596 | **731647** |
| 2649596 | **731648** |
| 2649627 | **731056** |
| 2649637 | **732524** |
| 2649637 | **734480** |
| 2649638 | **734480** |
| 2649639 | **732525** |
| 2649652 | **731451** |
| 2649652 | **732327** |
| 2649652 | **732539** |
| 2649656 | **731451** |
| 2649667 | **734129** |
| 2649668 | **734129** |
| 2649758 | **731462** |
| 2649758 | **734132** |
| 2649797 | **732539** |
| 2649797 | **734132** |
| 2649797 | **734142** |
| 2649808 | **732327** |
| 2649810 | **734142** |
| 2649955 | **732748** |
| 2649964 | **732613** |
| 2649973 | **734143** |
| 2649974 | **731642** |
| 2649975 | **731641** |
| 2649976 | **734131** |
| 2649978 | **734131** |
| 2649979 | **731462** |
| 2649981 | **731649** |
| 2649982 | **732327** |
| 2649983 | **732612** |

| IAM | Valeo |
|---|---|
| **SERCK COOLING** | |
| 2649983 | **732613** |
| 2649984 | **734480** |
| 2649985 | **734129** |
| 2649986 | **734129** |
| 2649986 | **734481** |
| 2649988 | **735198** |
| 2649989 | **734198** |
| 2649990 | **735058** |
| 2649991 | **735059** |
| 2649992 | **734144** |
| 2649993 | **734196** |
| 2650003 | **730316** |
| 2650003 | **734111** |
| 2650009 | **734111** |
| 2650012 | **730430** |
| 2650017 | **731434** |
| 2650018 | **731473** |
| 2650018 | **731459** |
| 2650019 | **731434** |
| 2650019 | **731469** |
| 2650665 | **819193** |
| 2650666 | **734476** |
| 2650667 | **730424** |
| 2651901 | **731467** |
| 2652177 | **735050** |
| 2652178 | **734218** |
| 2652179 | **735049** |
| 2659003 | **731634** |
| 2659003 | **819193** |
| 2659003 | **730316** |
| 2659015 | **734623** |
| 2659051 | **734112** |
| 2659087 | **731471** |
| 2659088 | **734109** |
| 2659114 | **734624** |
| 2659252 | **731635** |
| 2659257 | **731634** |
| 2659345 | **734717** |
| 2659390 | **734110** |
| 2659391 | **734110** |
| 2659412 | **730424** |
| 2659412 | **730429** |
| 2659459 | **731473** |
| 2659587 | **731434** |
| 2659621 | **730423** |
| 2659673 | **734111** |
| 2659673 | **734112** |
| 2659802 | **731634** |
| 2659901 | **730417** |
| 2659906 | **734218** |
| 2659907 | **734112** |
| 2659907 | **734747** |
| 2659908 | **734702** |
| 2659909 | **734112** |
| 2659911 | **734117** |
| 2659912 | **734113** |
| 2659914 | **734716** |
| 2659914 | **734717** |
| 2659915 | **734703** |
| 2659916 | **734109** |
| 2659917 | **735050** |
| 2659921 | **734290** |
| 2659922 | **734477** |
| 2659927 | **734112** |
| 2659928 | **734478** |
| 2659929 | **731469** |
| 2660105 | **734166** |
| 2660107 | **730456** |
| 2662077 | **734214** |
| 2662079 | **734162** |
| 2669182 | **734159** |
| 2669440 | **730457** |
| 2669601 | **731463** |
| 2669603 | **731828** |
| 2669862 | **732750** |
| 2669863 | **734406** |
| 2669864 | **734164** |
| 2669865 | **732719** |

| IAM | Valeo |
|---|---|
| **SERCK COOLING** | |
| 2669867 | **734213** |
| 2669868 | **734203** |
| 2669869 | **730456** |
| 2669870 | **734161** |
| 2669871 | **734165** |
| 2669874 | **734835** |
| 2669876 | **734214** |
| 2669880 | **734161** |
| 2669881 | **734159** |
| 2669882 | **734917** |
| 2669883 | **734486** |
| 2669885 | **735074** |
| 2670002 | **731456** |
| 2676670 | **731456** |
| 2679002 | **734577** |
| 2679120 | **731438** |
| 2679120 | **731675** |
| 2679121 | **734405** |
| 2679122 | **734577** |
| 2679123 | **734577** |
| 2679124 | **735210** |
| 2679125 | **734465** |
| 2679126 | **734465** |
| 2679127 | **732410** |
| 2679220 | **731438** |
| 2679651 | **730455** |
| 2679652 | **730455** |
| 2679652 | **731456** |
| 2679992 | **731438** |
| 2679992 | **734212** |
| 2679993 | **731677** |
| 2679994 | **734157** |
| 2679995 | **734158** |
| 2679996 | **731678** |
| 2680200 | **734408** |
| 2682148 | **734408** |
| 2689001 | **734267** |
| 2689010 | **734950** |
| 2689026 | **734259** |
| 2689028 | **734256** |
| 2689034 | **734261** |
| 2689100 | **732488** |
| 2689162 | **734250** |
| 2689206 | **734255** |
| 2689233 | **734587** |
| 2689241 | **734267** |
| 2689260 | **734249** |
| 2689261 | **734248** |
| 2689271 | **734254** |
| 2689280 | **734256** |
| 2689340 | **732487** |
| 2689505 | **734253** |
| 2689505 | **734266** |
| 2689532 | **734766** |
| 2689570 | **734596** |
| 2689639 | **734252** |
| 2689648 | **734761** |
| 2689700 | **734258** |
| 2689701 | **731454** |
| 2689805 | **734256** |
| 2689847 | **732483** |
| 2689850 | **732483** |
| 2689941 | **734251** |
| 2689948 | **734765** |
| 2689949 | **734767** |
| 2689950 | **734764** |
| 2689951 | **734767** |
| 2689952 | **734259** |
| 2689959 | **735157** |
| 2689961 | **735158** |
| 2689962 | **735159** |
| 2689964 | **734251** |
| 2689965 | **734762** |
| 2689966 | **735266** |
| 2689968 | **734762** |
| 2689975 | **734965** |
| 2689976 | **734903** |
| 2689985 | **731454** |

| IAM | Valeo |
|---|---|
| **SERCK COOLING** | |
| 2689991 | **734949** |
| 2699460 | **732327** |
| 2710102 | **734606** |
| 2710102 | **731401** |
| 2710111 | **883727** |
| 2710111 | **730955** |
| 2710113 | **732438** |
| 2710115 | **732437** |
| 2710116 | **731267** |
| 2710117 | **731032** |
| 2710118 | **734586** |
| 2710119 | **734606** |
| 2710120 | **732436** |
| 2710121 | **731411** |
| 2710122 | **732397** |
| 2710122 | **732845** |
| 2710123 | **731006** |
| 2710124 | **730629** |
| 2710124 | **883870** |
| 2710126 | **730971** |
| 2710127 | **731428** |
| 2710132 | **731429** |
| 2710133 | **731760** |
| 2710133 | **883863** |
| 2710136 | **731430** |
| 2710137 | **732440** |
| 2710147 | **730362** |
| 2710251 | **883863** |
| 2710252 | **731428** |
| 2710254 | **734753** |
| 2710899 | **731264** |
| 2710900 | **732710** |
| 2711153 | **819259** |
| 2712223 | **734335** |
| 2712229 | **735093** |
| 2712249 | **732953** |
| 2712250 | **732952** |
| 2712381 | **734432** |
| 2715135 | **731607** |
| 2715236 | **732361** |
| 2715236 | **731537** |
| 2719013 | **883863** |
| 2719021 | **730370** |
| 2719021 | **883849** |
| 2719022 | **730485** |
| 2719023 | **730485** |
| 2719024 | **734418** |
| 2719025 | **734270** |
| 2719029 | **732435** |
| 2719030 | **883820** |
| 2719035 | **731007** |
| 2719036 | **731008** |
| 2719050 | **731005** |
| 2719123 | **819259** |
| 2719123 | **819260** |
| 2719123 | **730349** |
| 2719125 | **883871** |
| 2719204 | **731503** |
| 2719207 | **730349** |
| 2719207 | **731501** |
| 2719235 | **731537** |
| 2719235 | **731755** |
| 2719235 | **732361** |
| 2719236 | **732361** |
| 2719237 | **731756** |
| 2719239 | **731757** |
| 2719240 | **735093** |
| 2719242 | **731755** |
| 2719247 | **731537** |
| 2719247 | **732361** |
| 2719250 | **734268** |
| 2719253 | **883720** |
| 2719256 | **734415** |
| 2719256 | **883870** |
| 2719259 | **819259** |
| 2719268 | **731537** |
| 2719279 | **732797** |
| 2719300 | **734419** |

| IAM | Valeo |
|---|---|
| **SERCK COOLING** | |
| 2719352 | **731607** |
| 2719354 | **731606** |
| 2719354 | **732175** |
| 2719355 | **732427** |
| 2719355 | **731606** |
| 2719355 | **732175** |
| 2719360 | **730360** |
| 2719360 | **730361** |
| 2719361 | **730360** |
| 2719363 | **730362** |
| 2719363 | **730363** |
| 2719363 | **734751** |
| 2719366 | **731616** |
| 2719385 | **731605** |
| 2719452 | **731422** |
| 2719499 | **731755** |
| 2719504 | **731505** |
| 2719505 | **730504** |
| 2719517 | **883818** |
| 2719518 | **883820** |
| 2719525 | **731127** |
| 2719622 | **730485** |
| 2719703 | **816703** |
| 2719718 | **883718** |
| 2719720 | **730972** |
| 2719721 | **732862** |
| 2719721 | **732864** |
| 2719726 | **883864** |
| 2719727 | **883727** |
| 2719746 | **811067** |
| 2719819 | **883819** |
| 2719832 | **731616** |
| 2719869 | **883869** |
| 2719907 | **732427** |
| 2719909 | **734419** |
| 2719914 | **730503** |
| 2719914 | **730504** |
| 2719916 | **732963** |
| 2719917 | **734335** |
| 2719918 | **730505** |
| 2719919 | **734269** |
| 2719920 | **731025** |
| 2719928 | **730955** |
| 2719930 | **734332** |
| 2719931 | **734335** |
| 2719932 | **732864** |
| 2719933 | **732872** |
| 2719934 | **734335** |
| 2719935 | **732864** |
| 2719936 | **732864** |
| 2719937 | **732361** |
| 2719938 | **731757** |
| 2719939 | **731757** |
| 2719940 | **731756** |
| 2719941 | **731757** |
| 2719954 | **730954** |
| 2719956 | **732953** |
| 2719956 | **730956** |
| 2719989 | **734333** |
| 2719991 | **734515** |
| 2719992 | **734740** |
| 2719993 | **733074** |
| 2719994 | **734859** |
| 2719995 | **730947** |
| 2719996 | **732785** |
| 2719998 | **734741** |
| 2719999 | **734741** |
| 2729003 | **735172** |
| 2729005 | **735171** |
| 2729018 | **735171** |
| 2729021 | **811010** |
| 2729100 | **811389** |
| 2729162 | **811068** |
| 2729251 | **731251** |
| 2729252 | **731591** |
| 2729252 | **810949** |
| 2729252 | **811073** |
| 2729252 | **731561** |

| IAM | Valeo |
|---|---|
| **SERCK COOLING** | |
| 2729253 | **731561** |
| 2729253 | **731591** |
| 2729283 | **731283** |
| 2729378 | **734692** |
| 2729394 | **732854** |
| 2729437 | **731591** |
| 2729437 | **731561** |
| 2729516 | **811071** |
| 2729581 | **732248** |
| 2729704 | **811068** |
| 2729710 | **816710** |
| 2729809 | **734229** |
| 2729843 | **734733** |
| 2729883 | **732696** |
| 2729894 | **734228** |
| 2729910 | **732505** |
| 2729919 | **732011** |
| 2729920 | **732011** |
| 2729920 | **732012** |
| 2729921 | **732013** |
| 2729921 | **732012** |
| 2729951 | **732696** |
| 2729952 | **734283** |
| 2729953 | **732505** |
| 2729954 | **732722** |
| 2729955 | **731283** |
| 2729956 | **732013** |
| 2729957 | **734733** |
| 2729959 | **735021** |
| 2731086 | **883959** |
| 2732360 | **732911** |
| 2732361 | **732919** |
| 2732362 | **732960** |
| 2733289 | **810938** |
| 2734748 | **810889** |
| 2737182 | **810926** |
| 2737750 | **730940** |
| 2737752 | **730940** |
| 2737753 | **730940** |
| 2737853 | **810889** |
| 2739003 | **730055** |
| 2739026 | **810933** |
| 2739026 | **883282** |
| 2739032 | **810843** |
| 2739033 | **810843** |
| 2739034 | **810887** |
| 2739034 | **810888** |
| 2739035 | **730510** |
| 2739042 | **810835** |
| 2739071 | **732071** |
| 2739071 | **732474** |
| 2739082 | **732621** |
| 2739083 | **731380** |
| 2739084 | **732523** |
| 2739092 | **810927** |
| 2739103 | **732338** |
| 2739112 | **732819** |
| 2739128 | **731128** |
| 2739129 | **731129** |
| 2739129 | **731162** |
| 2739134 | **819431** |
| 2739143 | **732387** |
| 2739143 | **732474** |
| 2739161 | **731161** |
| 2739171 | **732072** |
| 2739175 | **816552** |
| 2739210 | **732050** |
| 2739212 | **732051** |
| 2739216 | **730944** |
| 2739240 | **730183** |
| 2739247 | **732316** |
| 2739261 | **731161** |
| 2739261 | **731738** |
| 2739281 | **730182** |
| 2739304 | **732071** |
| 2739309 | **810912** |
| 2739323 | **730551** |
| 2739324 | **734284** |

| IAM | Valeo |
|---|---|
| **SERCK COOLING** | |
| 2739345 | **732544** |
| 2739345 | **731128** |
| 2739354 | **730540** |
| 2739360 | **730633** |
| 2739367 | **732687** |
| 2739382 | **732389** |
| 2739387 | **732387** |
| 2739403 | **810995** |
| 2739403 | **883875** |
| 2739424 | **810887** |
| 2739424 | **810938** |
| 2739436 | **731552** |
| 2739444 | **816658** |
| 2739449 | **730499** |
| 2739449 | **816655** |
| 2739481 | **730184** |
| 2739529 | **731162** |
| 2739529 | **731529** |
| 2739538 | **731538** |
| 2739548 | **730548** |
| 2739549 | **730549** |
| 2739579 | **730181** |
| 2739581 | **730185** |
| 2739672 | **732608** |
| 2739690 | **730969** |
| 2739701 | **883463** |
| 2739713 | **732717** |
| 2739730 | **810927** |
| 2739730 | **883729** |
| 2739734 | **734285** |
| 2739737 | **810851** |
| 2739753 | **810995** |
| 2739764 | **732827** |
| 2739765 | **732828** |
| 2739767 | **816654** |
| 2739768 | **732338** |
| 2739768 | **816656** |
| 2739770 | **816657** |
| 2739800 | **730502** |
| 2739808 | **730510** |
| 2739809 | **730973** |
| 2739837 | **730140** |
| 2739838 | **730140** |
| 2739840 | **816654** |
| 2739840 | **816655** |
| 2739851 | **883851** |
| 2739854 | **883851** |
| 2739873 | **731378** |
| 2739909 | **731378** |
| 2739910 | **731910** |
| 2739930 | **883852** |
| 2739930 | **883959** |
| 2739964 | **730180** |
| 2739964 | **730511** |
| 2739973 | **731379** |
| 2739974 | **732827** |
| 2739975 | **734284** |
| 2739977 | **732721** |
| 2739979 | **731738** |
| 2739980 | **732559** |
| 2739989 | **732946** |
| 2739990 | **734284** |
| 2739991 | **732559** |
| 2739992 | **732874** |
| 2739994 | **732853** |
| 2739995 | **883463** |
| 2739996 | **732919** |
| 2739997 | **734728** |
| 2739999 | **732873** |
| 2750982 | **731248** |
| 2752649 | **732108** |
| 2755056 | **810970** |
| 2755712 | **810965** |
| 2759006 | **732365** |
| 2759044 | **810957** |
| 2759212 | **810957** |
| 2759262 | **810968** |
| 2759438 | **732120** |

| IAM | Valeo |
|---|---|
| **SERCK COOLING** | |
| 2759495 | **732121** |
| 2759562 | **732120** |
| 2759570 | **732121** |
| 2759588 | **732122** |
| 2759596 | **732123** |
| 2759622 | **810956** |
| 2759718 | **734830** |
| 2759734 | **734831** |
| 2759794 | **732123** |
| 2759800 | **734714** |
| 2759860 | **732372** |
| 2759928 | **732122** |
| 2759929 | **732947** |
| 2759930 | **732947** |
| 2759931 | **734339** |
| 2759932 | **732120** |
| 2759935 | **734856** |
| 2759936 | **732372** |
| 2759937 | **734855** |
| 2760071 | **731514** |
| 2760181 | **734689** |
| 2760182 | **734875** |
| 2760183 | **732472** |
| 2760185 | **734806** |
| 2760186 | **734878** |
| 2762301 | **735223** |
| 2762301 | **735233** |
| 2769002 | **732591** |
| 2769024 | **731509** |
| 2769062 | **819379** |
| 2769100 | **810869** |
| 2769100 | **819368** |
| 2769103 | **732090** |
| 2769138 | **819418** |
| 2769141 | **819377** |
| 2769158 | **734615** |
| 2769179 | **731294** |
| 2769180 | **730229** |
| 2769181 | **819387** |
| 2769200 | **819414** |
| 2769204 | **730883** |
| 2769204 | **731741** |
| 2769207 | **732446** |
| 2769232 | **734378** |
| 2769232 | **734379** |
| 2769239 | **735234** |
| 2769240 | **735230** |
| 2769241 | **732741** |
| 2769243 | **732462** |
| 2769245 | **734631** |
| 2769248 | **734827** |
| 2769251 | **732741** |
| 2769253 | **731807** |
| 2769256 | **819397** |
| 2769256 | **819414** |
| 2769261 | **819422** |
| 2769269 | **819377** |
| 2769277 | **819395** |
| 2769281 | **730344** |
| 2769289 | **732587** |
| 2769301 | **731508** |
| 2769305 | **731520** |
| 2769305 | **819413** |
| 2769306 | **819415** |
| 2769309 | **730365** |
| 2769309 | **819413** |
| 2769354 | **732099** |
| 2769355 | **819415** |
| 2769368 | **734615** |
| 2769372 | **732605** |
| 2769377 | **732462** |
| 2769391 | **731291** |
| 2769392 | **731292** |
| 2769393 | **731293** |
| 2769394 | **731294** |
| 2769401 | **819384** |
| 2769403 | **730344** |
| 2769408 | **883860** |

| IAM | Valeo |
|---|---|
| **SERCK COOLING** | |
| 2769423 | **819373** |
| 2769425 | **734795** |
| 2769443 | **819376** |
| 2769449 | **732593** |
| 2769463 | **819387** |
| 2769502 | **730883** |
| 2769502 | **731741** |
| 2769503 | **730344** |
| 2769519 | **734276** |
| 2769528 | **731511** |
| 2769533 | **819383** |
| 2769537 | **730365** |
| 2769567 | **732099** |
| 2769583 | **731725** |
| 2769583 | **819412** |
| 2769603 | **819368** |
| 2769621 | **731804** |
| 2769630 | **732460** |
| 2769643 | **819387** |
| 2769647 | **731514** |
| 2769659 | **734793** |
| 2769662 | **734794** |
| 2769662 | **734795** |
| 2769667 | **732447** |
| 2769696 | **734301** |
| 2769697 | **819413** |
| 2769703 | **730344** |
| 2769760 | **732591** |
| 2769784 | **731805** |
| 2769792 | **731807** |
| 2769810 | **732605** |
| 2769853 | **731805** |
| 2769853 | **731808** |
| 2769855 | **732450** |
| 2769864 | **732099** |
| 2769888 | **734631** |
| 2769902 | **732458** |
| 2769903 | **883876** |
| 2769912 | **810947** |
| 2769912 | **819422** |
| 2769913 | **819201** |
| 2769931 | **734895** |
| 2769933 | **734894** |
| 2769937 | **735034** |
| 2769938 | **734897** |
| 2769938 | **734898** |
| 2769940 | **732198** |
| 2769941 | **732456** |
| 2769944 | **731523** |
| 2769945 | **883860** |
| 2769956 | **735165** |
| 2769961 | **810947** |
| 2769962 | **732587** |
| 2769965 | **732742** |
| 2769966 | **734749** |
| 2769969 | **734614** |
| 2769972 | **732743** |
| 2769973 | **732315** |
| 2769974 | **732593** |
| 2769976 | **734796** |
| 2769978 | **731514** |
| 2769980 | **734799** |
| 2769981 | **732454** |
| 2769983 | **732736** |
| 2769984 | **732199** |
| 2769985 | **732471** |
| 2769989 | **734827** |
| 2769990 | **732198** |
| 2769991 | **734826** |
| 2769994 | **732451** |
| 2769997 | **732849** |
| 2769998 | **734805** |
| 2770061 | **811392** |
| 2770062 | **732851** |
| 2770063 | **734221** |
| 2770356 | **731979** |
| 2770484 | **731981** |
| 2772311 | **735040** |

| IAM | Valeo |
|---|---|
| **SERCK COOLING** | |
| 2772312 | **735041** |
| 2772317 | **732557** |
| 2772322 | **731592** |
| 2772526 | **732787** |
| 2773806 | **883806** |
| 2773812 | **883812** |
| 2773812 | **883827** |
| 2773813 | **883813** |
| 2774007 | **883958** |
| 2774069 | **732688** |
| 2779010 | **883053** |
| 2779011 | **816707** |
| 2779013 | **730946** |
| 2779013 | **730947** |
| 2779014 | **730947** |
| 2779014 | **730946** |
| 2779017 | **731558** |
| 2779017 | **731978** |
| 2779018 | **811070** |
| 2779019 | **731591** |
| 2779019 | **731592** |
| 2779019 | **810949** |
| 2779019 | **811073** |
| 2779020 | **730945** |
| 2779041 | **730947** |
| 2779048 | **883811** |
| 2779049 | **811385** |
| 2779049 | **811386** |
| 2779050 | **811387** |
| 2779050 | **883825** |
| 2779061 | **731281** |
| 2779069 | **811069** |
| 2779071 | **811071** |
| 2779072 | **811071** |
| 2779072 | **811073** |
| 2779073 | **811073** |
| 2779080 | **731168** |
| 2779081 | **730948** |
| 2779087 | **731278** |
| 2779091 | **730945** |
| 2779091 | **731266** |
| 2779093 | **731268** |
| 2779096 | **731973** |
| 2779098 | **732108** |
| 2779149 | **730542** |
| 2779152 | **730370** |
| 2779163 | **731972** |
| 2779163 | **732688** |
| 2779165 | **731276** |
| 2779171 | **731375** |
| 2779171 | **734235** |
| 2779172 | **811056** |
| 2779173 | **732578** |
| 2779173 | **734225** |
| 2779235 | **731375** |
| 2779251 | **731269** |
| 2779251 | **730947** |
| 2779253 | **731266** |
| 2779254 | **730946** |
| 2779265 | **731265** |
| 2779268 | **732787** |
| 2779270 | **730947** |
| 2779270 | **731270** |
| 2779271 | **732913** |
| 2779272 | **731980** |
| 2779272 | **731266** |
| 2779302 | **731306** |
| 2779302 | **731302** |
| 2779302 | **731303** |
| 2779303 | **731302** |
| 2779303 | **731303** |
| 2779304 | **731304** |
| 2779304 | **734239** |
| 2779305 | **731304** |
| 2779305 | **734239** |
| 2779306 | **732623** |
| 2779306 | **732787** |
| 2779306 | **734220** |

| IAM | Valeo |
|---|---|
| **SERCK COOLING** | |
| 2779307 | **731973** |
| 2779308 | **732557** |
| 2779308 | **731974** |
| 2779345 | **730990** |
| 2779345 | **883813** |
| 2779368 | **730991** |
| 2779372 | **731306** |
| 2779378 | **730319** |
| 2779388 | **732218** |
| 2779388 | **732788** |
| 2779401 | **811071** |
| 2779401 | **811385** |
| 2779401 | **811386** |
| 2779404 | **730838** |
| 2779417 | **732007** |
| 2779429 | **730519** |
| 2779430 | **732006** |
| 2779430 | **732812** |
| 2779448 | **732005** |
| 2779450 | **883809** |
| 2779467 | **732007** |
| 2779467 | **732578** |
| 2779467 | **734225** |
| 2779500 | **734768** |
| 2779504 | **731976** |
| 2779512 | **731269** |
| 2779514 | **732580** |
| 2779529 | **731976** |
| 2779529 | **732557** |
| 2779531 | **731562** |
| 2779531 | **732705** |
| 2779579 | **730980** |
| 2779652 | **732557** |
| 2779652 | **734221** |
| 2779660 | **730976** |
| 2779660 | **731558** |
| 2779660 | **731562** |
| 2779664 | **811381** |
| 2779664 | **883809** |
| 2779669 | **730981** |
| 2779669 | **731977** |
| 2779673 | **731267** |
| 2779746 | **811067** |
| 2779749 | **734224** |
| 2779780 | **734239** |
| 2779781 | **732692** |
| 2779789 | **732789** |
| 2779825 | **811387** |
| 2779825 | **883825** |
| 2779867 | **734219** |
| 2779881 | **730309** |
| 2779881 | **730520** |
| 2779921 | **883921** |
| 2779927 | **731282** |
| 2779938 | **730838** |
| 2779938 | **810949** |
| 2779943 | **810949** |
| 2779944 | **732913** |
| 2779956 | **731592** |
| 2779957 | **734692** |
| 2779958 | **734362** |
| 2779959 | **731975** |
| 2779961 | **731977** |
| 2779978 | **731562** |
| 2779980 | **731593** |
| 2779983 | **734412** |
| 2779984 | **810984** |
| 2779985 | **734219** |
| 2779988 | **730980** |
| 2779988 | **731374** |
| 2779990 | **731975** |
| 2779991 | **731981** |
| 2779992 | **731979** |
| 2779993 | **734458** |
| 2779996 | **732924** |
| 2779997 | **732925** |
| 2779998 | **734345** |
| 2779999 | **734361** |

| IAM | Valeo |
|---|---|
| **SERCK COOLING** | |
| 2781300 | **730071** |
| 2782236 | **731495** |
| 2782269 | **734463** |
| 2782274 | **732880** |
| 2782275 | **732944** |
| 2782276 | **732945** |
| 2782277 | **732881** |
| 2782280 | **732888** |
| 2787120 | **730018** |
| 2789023 | **731743** |
| 2789023 | **730395** |
| 2789023 | **731022** |
| 2789023 | **731175** |
| 2789024 | **731743** |
| 2789027 | **730927** |
| 2789037 | **732885** |
| 2789038 | **732886** |
| 2789044 | **732567** |
| 2789053 | **732904** |
| 2789053 | **732910** |
| 2789068 | **734278** |
| 2789082 | **732892** |
| 2789082 | **732908** |
| 2789083 | **732908** |
| 2789093 | **730575** |
| 2789093 | **730953** |
| 2789143 | **730372** |
| 2789170 | **730634** |
| 2789170 | **810955** |
| 2789176 | **731176** |
| 2789186 | **731186** |
| 2789198 | **810915** |
| 2789205 | **732910** |
| 2789240 | **730898** |
| 2789254 | **731391** |
| 2789260 | **810836** |
| 2789280 | **811380** |
| 2789283 | **731382** |
| 2789298 | **731298** |
| 2789304 | **730983** |
| 2789305 | **730534** |
| 2789331 | **734278** |
| 2789332 | **731391** |
| 2789344 | **730927** |
| 2789344 | **730985** |
| 2789347 | **730984** |
| 2789347 | **731176** |
| 2789354 | **730983** |
| 2789357 | **730630** |
| 2789364 | **730984** |
| 2789381 | **731381** |
| 2789383 | **731383** |
| 2789384 | **731384** |
| 2789390 | **730953** |
| 2789390 | **730575** |
| 2789405 | **810919** |
| 2789466 | **816555** |
| 2789466 | **816700** |
| 2789503 | **730506** |
| 2789509 | **810892** |
| 2789512 | **730512** |
| 2789526 | **731526** |
| 2789530 | **730368** |
| 2789530 | **730515** |
| 2789555 | **816700** |
| 2789555 | **816555** |
| 2789569 | **730569** |
| 2789572 | **730572** |
| 2789574 | **730575** |
| 2789575 | **730575** |
| 2789577 | **730577** |
| 2789599 | **732599** |
| 2789613 | **731389** |
| 2789630 | **730630** |
| 2789723 | **810827** |
| 2789797 | **730015** |
| 2789849 | **731744** |
| 2789858 | **810882** |

| IAM | Valeo |
|---|---|
| **SERCK COOLING** | |
| 2789941 | **730634** |
| 2789984 | **731389** |
| 2789987 | **732881** |
| 2789989 | **732830** |
| 2789992 | **734411** |
| 2789993 | **732892** |
| 2789995 | **732893** |
| 2789997 | **734463** |
| 2789998 | **734423** |
| 2789999 | **734452** |
| 2790135 | **732909** |
| 2790135 | **810811** |
| 2790796 | **730375** |
| 2792227 | **732930** |
| 2792228 | **735068** |
| 2792267 | **734338** |
| 2796382 | **730635** |
| 2799001 | **731526** |
| 2799001 | **731527** |
| 2799007 | **731295** |
| 2799008 | **731296** |
| 2799009 | **731009** |
| 2799010 | **731570** |
| 2799010 | **731744** |
| 2799013 | **731570** |
| 2799013 | **731584** |
| 2799014 | **731574** |
| 2799015 | **731575** |
| 2799016 | **731009** |
| 2799027 | **731586** |
| 2799028 | **731584** |
| 2799033 | **883464** |
| 2799041 | **883774** |
| 2799051 | **732534** |
| 2799063 | **732598** |
| 2799068 | **731584** |
| 2799068 | **732564** |
| 2799068 | **734278** |
| 2799078 | **734280** |
| 2799079 | **734282** |
| 2799081 | **732492** |
| 2799082 | **732890** |
| 2799084 | **732563** |
| 2799086 | **732890** |
| 2799093 | **734455** |
| 2799095 | **730995** |
| 2799096 | **731611** |
| 2799097 | **730997** |
| 2799097 | **731611** |
| 2799098 | **731611** |
| 2799099 | **730999** |
| 2799109 | **732617** |
| 2799110 | **732618** |
| 2799126 | **883715** |
| 2799130 | **731530** |
| 2799132 | **731527** |
| 2799138 | **732535** |
| 2799175 | **816715** |
| 2799176 | **816716** |
| 2799177 | **731177** |
| 2799180 | **731180** |
| 2799181 | **731181** |
| 2799200 | **732831** |
| 2799201 | **730897** |
| 2799204 | **730982** |
| 2799219 | **731527** |
| 2799220 | **732930** |
| 2799230 | **732831** |
| 2799234 | **734281** |
| 2799235 | **734279** |
| 2799236 | **732892** |
| 2799276 | **811380** |
| 2799291 | **730498** |
| 2799291 | **816706** |
| 2799291 | **961149** |
| 2799294 | **730491** |
| 2799294 | **730498** |
| 2799294 | **731180** |

| IAM | Valeo |
|---|---|
| **SERCK COOLING** | |
| 2799298 | **731298** |
| 2799301 | **731173** |
| 2799308 | **734336** |
| 2799308 | **731527** |
| 2799315 | **732517** |
| 2799315 | **732535** |
| 2799319 | **732891** |
| 2799323 | **731173** |
| 2799325 | **731173** |
| 2799326 | **732620** |
| 2799331 | **732520** |
| 2799344 | **730927** |
| 2799361 | **731166** |
| 2799439 | **730934** |
| 2799480 | **732930** |
| 2799491 | **732517** |
| 2799494 | **730494** |
| 2799498 | **731498** |
| 2799498 | **731528** |
| 2799507 | **730507** |
| 2799507 | **734454** |
| 2799507 | **816716** |
| 2799508 | **730508** |
| 2799508 | **730983** |
| 2799555 | **730491** |
| 2799556 | **883765** |
| 2799561 | **731165** |
| 2799561 | **731166** |
| 2799563 | **730040** |
| 2799563 | **732577** |
| 2799564 | **732565** |
| 2799564 | **732577** |
| 2799573 | **730982** |
| 2799579 | **883866** |
| 2799581 | **731185** |
| 2799582 | **731289** |
| 2799582 | **732518** |
| 2799582 | **732577** |
| 2799591 | **732577** |
| 2799599 | **732599** |
| 2799616 | **732887** |
| 2799616 | **732909** |
| 2799619 | **732892** |
| 2799619 | **732909** |
| 2799620 | **730934** |
| 2799620 | **819428** |
| 2799632 | **730632** |
| 2799661 | **731165** |
| 2799663 | **730040** |
| 2799667 | **731166** |
| 2799668 | **731168** |
| 2799712 | **810836** |
| 2799731 | **731010** |
| 2799740 | **732520** |
| 2799773 | **883773** |
| 2799786 | **810954** |
| 2799792 | **731297** |
| 2799800 | **732890** |
| 2799800 | **732908** |
| 2799801 | **732891** |
| 2799831 | **816706** |
| 2799831 | **961149** |
| 2799879 | **810836** |
| 2799879 | **816554** |
| 2799912 | **731584** |
| 2799957 | **730957** |
| 2799958 | **730958** |
| 2799959 | **730959** |
| 2799960 | **730960** |
| 2799961 | **730958** |
| 2799962 | **732831** |
| 2799963 | **734346** |
| 2799964 | **734338** |
| 2799965 | **732908** |
| 2799966 | **734366** |
| 2799967 | **734279** |
| 2799968 | **731165** |
| 2799980 | **730896** |

| IAM | Valeo |
|---|---|
| **SERCK COOLING** | |
| 2799982 | **731289** |
| 2799983 | **732944** |
| 2799985 | **732945** |
| 2799986 | **734282** |
| 2799988 | **734452** |
| 2799990 | **734398** |
| 2799991 | **731584** |
| 2799992 | **732492** |
| 2799993 | **732830** |
| 3002028 | **819259** |
| 3002030 | **883863** |
| 3002047 | **730349** |
| 3002053 | **730349** |
| 3002055 | **734738** |
| 3002059 | **730349** |
| 3002082 | **730362** |
| 3002085 | **731429** |
| 3002098 | **730972** |
| 3002124 | **731756** |
| 3002129 | **731606** |
| 3002129 | **732175** |
| 3002157 | **734753** |
| 3002158 | **734859** |
| 3002189 | **732811** |
| 3002195 | **732839** |
| 3002196 | **734754** |
| 3002197 | **734755** |
| 3002201 | **732963** |
| 3002202 | **734269** |
| 3002204 | **734419** |
| 3002206 | **734268** |
| 3002207 | **734270** |
| 3002229 | **735093** |
| 3004086 | **817761** |
| 3004102 | **817762** |
| 3004112 | **817625** |
| 3004136 | **817865** |
| 3004172 | **817457** |
| 3004186 | **817867** |
| 3004191 | **817864** |
| 3004225 | **817625** |
| 5142101 | **735224** |
| 5142133 | **730172** |
| 5142137 | **731491** |
| 5142164 | **732400** |
| 5182001 | **732552** |
| 5182016 | **732312** |
| 5242943 | **734231** |
| 5272023 | **816647** |
| 5272035 | **731572** |
| 5272056 | **734449** |
| 5272057 | **734448** |
| 5272062 | **816647** |
| 5362196 | **731257** |
| 5362324 | **734272** |
| 5362325 | **734273** |
| 5362326 | **734274** |
| 5362337 | **734696** |
| 5362368 | **734319** |
| 5362369 | **734320** |
| 5362370 | **734321** |
| 5362373 | **734392** |
| 5362376 | **734699** |
| 5422027 | **732780** |
| 5422031 | **732426** |
| 5422032 | **731578** |
| 5422034 | **731579** |
| 5422055 | **731749** |
| 5422072 | **732704** |
| 5422077 | **732757** |
| 5422080 | **732883** |
| 5512030 | **730152** |
| 5512048 | **883751** |
| 5512092 | **883751** |
| 5512179 | **734821** |
| 5512199 | **731843** |
| 5512213 | **731236** |
| 5512245 | **731839** |

| IAM | Valeo |
|---|---|
| **SERCK COOLING** | |
| 5512246 | **731842** |
| 5512249 | **734389** |
| 5512266 | **734242** |
| 5512330 | **732694** |
| 5512337 | **734353** |
| 5512338 | **732879** |
| 5512339 | **732876** |
| 5512340 | **732877** |
| 5512341 | **732878** |
| 5512345 | **734384** |
| 5512346 | **734386** |
| 5512348 | **734385** |
| 5512362 | **734381** |
| 5512363 | **734382** |
| 5512364 | **734380** |
| 5512365 | **734383** |
| 5612011 | **731199** |
| 5612023 | **730466** |
| 5612088 | **731122** |
| 5612116 | **730472** |
| 5612142 | **731696** |
| 5612143 | **731694** |
| 5612144 | **734181** |
| 5612146 | **734839** |
| 5612151 | **731713** |
| 5612154 | **731715** |
| 5612160 | **731833** |
| 5612200 | **732542** |
| 5612201 | **731830** |
| 5612204 | **731441** |
| 5612204 | **731685** |
| 5612205 | **731682** |
| 5612206 | **731110** |
| 5612208 | **731688** |
| 5612220 | **734466** |
| 5612221 | **732415** |
| 5612227 | **732543** |
| 5612231 | **734176** |
| 5612232 | **734177** |
| 5612235 | **734488** |
| 5612236 | **734489** |
| 5612238 | **732753** |
| 5612239 | **732951** |
| 5612240 | **732754** |
| 5612241 | **732420** |
| 5612242 | **732420** |
| 5612248 | **734205** |
| 5612249 | **734206** |
| 5612255 | **734850** |
| 5612259 | **734841** |
| 5612282 | **735214** |
| 5612283 | **734401** |
| 5612284 | **734490** |
| 5612285 | **734491** |
| 5612289 | **734199** |
| 5612290 | **734200** |
| 5612295 | **732413** |
| 5612299 | **734182** |
| 5612301 | **734183** |
| 5612309 | **734185** |
| 5612317 | **734842** |
| 5612318 | **734916** |
| 5612323 | **734711** |
| 5612324 | **735075** |
| 5622034 | **731134** |
| 5622049 | **731082** |
| 5622085 | **731661** |
| 5622086 | **731083** |
| 5622096 | **731090** |
| 5622135 | **734151** |
| 5622215 | **734736** |
| 5622215 | **734705** |
| 5622216 | **734708** |
| 5622217 | **734729** |
| 5622218 | **734473** |
| 5622223 | **734706** |
| 5622235 | **732903** |
| 5632017 | **734265** |

| IAM | Valeo |
|---|---|
| **SERCK COOLING** | |
| 5632060 | **735053** |
| 5632068 | **732326** |
| 5632083 | **730435** |
| 5632090 | **731072** |
| 5632091 | **732475** |
| 5632096 | **734581** |
| 5632134 | **734119** |
| 5632138 | **734119** |
| 5632146 | **732346** |
| 5632152 | **734124** |
| 5632161 | **734483** |
| 5632162 | **734484** |
| 5632164 | **734410** |
| 5632167 | **734126** |
| 5632168 | **735240** |
| 5642009 | **730446** |
| 5642042 | **731056** |
| 5642081 | **734136** |
| 5642082 | **731639** |
| 5642083 | **731638** |
| 5642084 | **731641** |
| 5642085 | **731640** |
| 5642091 | **731650** |
| 5642110 | **734145** |
| 5642127 | **734137** |
| 5642129 | **734138** |
| 5642129 | **734139** |
| 5642134 | **734141** |
| 5642135 | **734141** |
| 5642142 | **732524** |
| 5642147 | **732540** |
| 5642148 | **734127** |
| 5642156 | **734143** |
| 5642157 | **734424** |
| 5642157 | **734144** |
| 5642158 | **734146** |
| 5642159 | **734145** |
| 5642163 | **735058** |
| 5642164 | **735060** |
| 5642167 | **734424** |
| 5652020 | **731434** |
| 5652021 | **731434** |
| 5652021 | **731458** |
| 5652041 | **730424** |
| 5652043 | **731635** |
| 5652047 | **819193** |
| 5652050 | **731634** |
| 5652051 | **731635** |
| 5652056 | **730429** |
| 5652058 | **731467** |
| 5652059 | **734111** |
| 5652063 | **730429** |
| 5652064 | **730417** |
| 5652067 | **731434** |
| 5652073 | **731630** |
| 5652074 | **731629** |
| 5652076 | **731474** |
| 5652078 | **734624** |
| 5652080 | **731434** |
| 5652094 | **734747** |
| 5652100 | **734113** |
| 5652102 | **734114** |
| 5652110 | **734112** |
| 5652118 | **734716** |
| 5652119 | **734717** |
| 5652120 | **731434** |
| 5652121 | **731434** |
| 5652121 | **731469** |
| 5652122 | **731434** |
| 5652122 | **731458** |
| 5652123 | **731459** |
| 5652123 | **731474** |
| 5652162 | **734476** |
| 5652163 | **734477** |
| 5652166 | **734478** |
| 5652170 | **734703** |
| 5662034 | **732750** |
| 5662035 | **732750** |

| IAM | Valeo |
|---|---|
| **SERCK COOLING** | |
| 5662036 | **734919** |
| 5662041 | **734835** |
| 5662046 | **734213** |
| 5662050 | **734835** |
| 5662055 | **734170** |
| 5662057 | **734917** |
| 5662058 | **734486** |
| 5662061 | **734171** |
| 5662062 | **734164** |
| 5662063 | **734165** |
| 5662064 | **732719** |
| 5662065 | **735074** |
| 5662070 | **735073** |
| 5662071 | **731463** |
| 5662073 | **734161** |
| 5662074 | **734918** |
| 5672007 | **731153** |
| 5672022 | **731678** |
| 5672035 | **734211** |
| 5672036 | **734212** |
| 5672037 | **734158** |
| 5672045 | **732410** |
| 5672046 | **734577** |
| 5672048 | **734405** |
| 5672052 | **735211** |
| 5672053 | **734465** |
| 5682003 | **734596** |
| 5682010 | **734765** |
| 5682016 | **734767** |
| 5682017 | **734764** |
| 5682044 | **734258** |
| 5682049 | **734408** |
| 5682052 | **734762** |
| 5682053 | **735266** |
| 5682086 | **734253** |
| 5682095 | **734903** |
| 5682105 | **734965** |
| 5682107 | **734949** |
| 5682108 | **734784** |
| 5682110 | **734909** |
| 5682113 | **734905** |
| 5682114 | **734908** |
| 5692052 | **734254** |
| 5712041 | **883849** |
| 5712047 | **730349** |
| 5712059 | **883905** |
| 5712060 | **731760** |
| 5712080 | **730485** |
| 5712082 | **730362** |
| 5712084 | **730363** |
| 5712085 | **731429** |
| 5712088 | **731430** |
| 5712099 | **734695** |
| 5712111 | **734415** |
| 5712115 | **731267** |
| 5712115 | **731268** |
| 5712124 | **731756** |
| 5712125 | **731757** |
| 5712139 | **734752** |
| 5712156 | **731728** |
| 5712157 | **734753** |
| 5712158 | **734859** |
| 5712184 | **732786** |
| 5712188 | **732790** |
| 5712189 | **732811** |
| 5712191 | **732710** |
| 5712193 | **732867** |
| 5712195 | **732839** |
| 5712196 | **734754** |
| 5712197 | **734755** |
| 5712198 | **734739** |
| 5712199 | **734740** |
| 5712201 | **732963** |
| 5712202 | **734269** |
| 5712203 | **734418** |
| 5712204 | **734419** |
| 5712205 | **734269** |
| 5712206 | **732872** |

| IAM | Valeo |
|---|---|
| **SERCK COOLING** | |
| 5712208 | **734333** |
| 5712213 | **733074** |
| 5712214 | **734741** |
| 5712217 | **732427** |
| 5712220 | **732785** |
| 5712245 | **732177** |
| 5722068 | **731591** |
| 5722076 | **731251** |
| 5722076 | **731559** |
| 5722084 | **734283** |
| 5722089 | **731283** |
| 5722099 | **810949** |
| 5722120 | **811070** |
| 5722181 | **731978** |
| 5722190 | **731592** |
| 5722204 | **734332** |
| 5722205 | **734335** |
| 5722206 | **734268** |
| 5722207 | **734270** |
| 5722227 | **732623** |
| 5722229 | **732503** |
| 5722232 | **732147** |
| 5722233 | **732788** |
| 5722235 | **731593** |
| 5722236 | **732685** |
| 5722243 | **734228** |
| 5722244 | **734229** |
| 5722250 | **734692** |
| 5722251 | **734228** |
| 5722258 | **732792** |
| 5722261 | **735171** |
| 5722262 | **735171** |
| 5722263 | **735172** |
| 5722264 | **735172** |
| 5722270 | **734220** |
| 5722275 | **732851** |
| 5722279 | **734361** |
| 5722281 | **734459** |
| 5722290 | **734457** |
| 5722291 | **732924** |
| 5722292 | **732925** |
| 5722295 | **734932** |
| 5722297 | **734458** |
| 5722299 | **732923** |
| 5722300 | **734363** |
| 5722301 | **732913** |
| 5722308 | **734362** |
| 5722950 | **732108** |
| 5732010 | **810933** |
| 5732054 | **730510** |
| 5732125 | **730511** |
| 5732129 | **730181** |
| 5732207 | **734220** |
| 5732233 | **734284** |
| 5732239 | **732608** |
| 5732257 | **732049** |
| 5732260 | **732338** |
| 5732263 | **732050** |
| 5732266 | **732559** |
| 5732267 | **732387** |
| 5732268 | **732387** |
| 5732270 | **732721** |
| 5732271 | **732389** |
| 5732272 | **732523** |
| 5732274 | **732940** |
| 5732276 | **732798** |
| 5732290 | **732827** |
| 5732292 | **732828** |
| 5732293 | **734828** |
| 5732300 | **734728** |
| 5732302 | **732761** |
| 5732303 | **732846** |
| 5732303 | **732853** |
| 5732306 | **732873** |
| 5732307 | **732874** |
| 5732308 | **732946** |
| 5732309 | **732717** |
| 5732312 | **732817** |

| IAM | Valeo |
|---|---|
| **SERCK COOLING** | |
| 5732313 | **732902** |
| 5732322 | **732918** |
| 5732322 | **732919** |
| 5732325 | **732687** |
| 5732326 | **732737** |
| 5732327 | **732846** |
| 5732327 | **732853** |
| 5742010 | **810965** |
| 5742020 | **810965** |
| 5752008 | **732123** |
| 5752035 | **734714** |
| 5752036 | **734830** |
| 5752037 | **734831** |
| 5752046 | **732110** |
| 5752055 | **734831** |
| 5752117 | **734720** |
| 5752118 | **734856** |
| 5762004 | **810952** |
| 5762023 | **734826** |
| 5762037 | **734827** |
| 5762069 | **734614** |
| 5762096 | **819384** |
| 5762120 | **732454** |
| 5762126 | **732460** |
| 5762129 | **734795** |
| 5762131 | **734794** |
| 5762132 | **734793** |
| 5762134 | **734421** |
| 5762144 | **732447** |
| 5762145 | **734798** |
| 5762148 | **732460** |
| 5762151 | **734631** |
| 5762159 | **731523** |
| 5762163 | **819379** |
| 5762164 | **731523** |
| 5762175 | **730344** |
| 5762177 | **732605** |
| 5762182 | **732472** |
| 5762190 | **731292** |
| 5762191 | **731293** |
| 5762192 | **731291** |
| 5762194 | **819418** |
| 5762202 | **731766** |
| 5762209 | **735231** |
| 5762212 | **732450** |
| 5762214 | **731294** |
| 5762222 | **732199** |
| 5762229 | **732451** |
| 5762233 | **734277** |
| 5762234 | **734394** |
| 5762235 | **735223** |
| 5762235 | **735233** |
| 5762236 | **734396** |
| 5762237 | **734799** |
| 5762271 | **732315** |
| 5762275 | **734895** |
| 5762277 | **734395** |
| 5762278 | **734276** |
| 5762284 | **734898** |
| 5762286 | **732741** |
| 5762287 | **734803** |
| 5762300 | **734689** |
| 5762301 | **734801** |
| 5762304 | **734796** |
| 5762308 | **734802** |
| 5762309 | **735234** |
| 5762311 | **735230** |
| 5762331 | **732736** |
| 5762332 | **732706** |
| 5762335 | **734807** |
| 5762336 | **734669** |
| 5762339 | **732743** |
| 5762342 | **734805** |
| 5762343 | **734875** |
| 5762348 | **734876** |
| 5762349 | **734877** |
| 5762350 | **734878** |
| 5762929 | **734615** |

| IAM | Valeo |
|---|---|
| **SERCK COOLING** | |
| 5762931 | **819418** |
| 5762940 | **734289** |
| 5772003 | **732479** |
| 5772005 | **732863** |
| 5772006 | **732862** |
| 5772006 | **732864** |
| 5772008 | **732864** |
| 5772010 | **732862** |
| 5772011 | **883053** |
| 5772014 | **732864** |
| 5772020 | **731271** |
| 5772025 | **811056** |
| 5772028 | **731269** |
| 5772033 | **883727** |
| 5772035 | **732317** |
| 5772048 | **816707** |
| 5772050 | **730838** |
| 5772066 | **731375** |
| 5772077 | **732582** |
| 5772079 | **732582** |
| 5772079 | **732584** |
| 5772081 | **734237** |
| 5772082 | **734236** |
| 5772083 | **734238** |
| 5772236 | **819387** |
| 5782021 | **810881** |
| 5782080 | **730015** |
| 5782105 | **730015** |
| 5782127 | **730575** |
| 5782133 | **730974** |
| 5782179 | **731575** |
| 5782196 | **732567** |
| 5782200 | **732599** |
| 5782205 | **732910** |
| 5782210 | **732906** |
| 5782216 | **732794** |
| 5782220 | **732894** |
| 5782223 | **732893** |
| 5782223 | **732895** |
| 5782231 | **734411** |
| 5782236 | **732892** |
| 5782236 | **732895** |
| 5782237 | **732830** |
| 5782238 | **732895** |
| 5782239 | **732893** |
| 5782241 | **732896** |
| 5782243 | **732885** |
| 5782244 | **732886** |
| 5782245 | **732904** |
| 5782246 | **732910** |
| 5782247 | **732906** |
| 5782248 | **732910** |
| 5782249 | **732894** |
| 5782251 | **732890** |
| 5782252 | **732891** |
| 5782255 | **734338** |
| 5782256 | **734452** |
| 5782260 | **734346** |
| 5792108 | **731181** |
| 5792123 | **731389** |
| 5792144 | **734760** |
| 5792147 | **731743** |
| 5792194 | **732517** |
| 5792196 | **731527** |
| 5792197 | **731527** |
| 5792198 | **731570** |
| 5792199 | **732520** |
| 5792206 | **732807** |
| 5792208 | **732692** |
| 5812081 | **730362** |
| 5872191 | **730994** |
| 5872200 | **734271** |
| 5872248 | **731840** |
| 5872248 | **735065** |
| 5872329 | **734388** |
| 5992037 | **734785** |
| 6002095 | **819418** |
| 6002159 | **731523** |

| IAM | Valeo |
|---|---|
| **SERCK COOLING** | |
| 6002179 | **734289** |
| 6002201 | **734301** |
| 6002278 | **734276** |
| 6002284 | **734898** |
| 6002301 | **735233** |
| 6002301 | **735223** |
| 6004207 | **817874** |
| 6014085 | **817861** |
| 6014086 | **817862** |
| 6014096 | **818794** |
| 6034086 | **817761** |
| 6034102 | **817762** |
| 6034112 | **817625** |
| 6034136 | **817865** |
| 6034172 | **817457** |
| 6034186 | **817867** |
| 6034188 | **817869** |
| 6034188 | **817870** |
| 6034191 | **817864** |
| 6034192 | **817872** |
| 6034200 | **817653** |
| 6034221 | **818757** |
| 6034224 | **817438** |
| 6034225 | **817625** |
| 6034249 | **818825** |
| 6064130 | **817873** |
| 6064193 | **817875** |
| 6064207 | **817874** |
| 6064260 | **817876** |
| 6064280 | **818715** |
| 6074035 | **816959** |
| 6094050 | **816889** |
| 6094081 | **816823** |
| 6094086 | **816851** |
| 6094130 | **816919** |
| 6094212 | **817651** |
| 6174189 | **817884** |
| 6174252 | **817879** |
| 6174267 | **817881** |
| 6174274 | **818725** |
| 6174280 | **817882** |
| 6174309 | **818726** |
| 6174319 | **818823** |
| 6184313 | **817888** |
| 6184315 | **817891** |
| 6184341 | **817238** |
| 6184366 | **818717** |
| 6284021 | **817941** |
| 6284045 | **818724** |
| 6304217 | **816890** |
| 6304224 | **817905** |
| 6304261 | **817759** |
| 6304285 | **817903** |
| 6304296 | **817907** |
| 6304297 | **817760** |
| 6304315 | **817911** |
| 6374269 | **817917** |
| 6374322 | **818728** |
| 6374325 | **817916** |
| 6374360 | **817697** |
| 6374361 | **817729** |
| 6374374 | **818759** |
| 6404183 | **817632** |
| 6404204 | **817437** |
| 6404261 | **817650** |
| 6434089 | **817115** |
| 6434148 | **816755** |
| 6434212 | **816836** |
| 6434277 | **817924** |
| 6434295 | **817926** |
| 6434296 | **817925** |
| 6434316 | **818727** |
| 6434320 | **817923** |
| 6434328 | **817554** |
| 6434351 | **817654** |
| 6584127 | **817764** |
| 6584136 | **817766** |
| 6584154 | **817937** |

| IAM | Valeo |
|---|---|
| **SERCK COOLING** | |
| 6584157 | **817936** |
| 6584159 | **817765** |
| 6584162 | **817767** |
| 6584163 | **817764** |
| 6584194 | **817486** |
| 6584200 | **817457** |
| 6584213 | **817556** |
| 6584216 | **818720** |
| 6584219 | **817555** |
| 6584227 | **818795** |
| 6584246 | **817372** |
| 6734085 | **817901** |
| 6734087 | **817899** |
| 7002027 | **732780** |
| 7002032 | **731578** |
| 7002034 | **731579** |
| 7002055 | **731749** |
| 7002080 | **732883** |
| 7004035 | **816959** |
| 9002010 | **810836** |
| 9002103 | **731383** |
| 9002104 | **731298** |
| 9002105 | **731381** |
| 9002106 | **731382** |
| 9002107 | **731384** |
| 9002119 | **731527** |
| 9002142 | **731743** |
| 9002144 | **734760** |
| 9002147 | **731743** |
| 9002155 | **732535** |
| 9002156 | **732520** |
| 9002165 | **734455** |
| 9002189 | **732930** |
| 9002190 | **732930** |
| 9002194 | **732517** |
| 9002195 | **734456** |
| 9002197 | **731527** |
| 9002199 | **732520** |
| 9002199 | **734445** |
| 9004050 | **816889** |
| 9004081 | **816823** |
| 9004086 | **816851** |
| 9004126 | **816918** |
| 9004130 | **816919** |
| 9004212 | **817651** |
| 13002034 | **731134** |
| 13002050 | **731082** |
| 13002054 | **731147** |
| 13002070 | **731188** |
| 13002085 | **731661** |
| 13002101 | **731187** |
| 13002131 | **731287** |
| 13002144 | **731656** |
| 13002206 | **734446** |
| 13002215 | **734736** |
| 13002215 | **734705** |
| 13002217 | **734729** |
| 13002218 | **734473** |
| 13002237 | **735061** |
| 17002012 | **883428** |
| 17002028 | **811392** |
| 17002047 | **883806** |
| 17002059 | **883827** |
| 17002096 | **810949** |
| 17002099 | **810949** |
| 17002120 | **811070** |
| 17002158 | **731303** |
| 17002162 | **731306** |
| 17002184 | **732688** |
| 17002190 | **731592** |
| 17002201 | **732557** |
| 17002207 | **734220** |
| 17002208 | **734225** |
| 17002210 | **732913** |
| 17002227 | **732623** |
| 17002228 | **731558** |
| 17002230 | **732218** |
| 17002231 | **732787** |

| IAM | Valeo |
|---|---|
| **SERCK COOLING** | |
| 17002232 | **732147** |
| 17002243 | **734228** |
| 17002250 | **734692** |
| 17002251 | **734228** |
| 17002292 | **732925** |
| 17002301 | **732913** |
| 17002317 | **732557** |
| 17002318 | **735042** |
| 17002322 | **731592** |
| 17004189 | **817884** |
| 17004319 | **818823** |
| 18002076 | **734774** |
| 18002085 | **730124** |
| 18002196 | **731257** |
| 18002201 | **731781** |
| 18002261 | **732497** |
| 18002318 | **734292** |
| 18002326 | **734274** |
| 18002346 | **734468** |
| 18002369 | **734320** |
| 18002376 | **734699** |
| 18002397 | **732624** |
| 18002398 | **732626** |
| 18004313 | **817888** |
| 18004366 | **818717** |
| 21002016 | **732312** |
| 21499074 | **731818** |
| 25002020 | **731434** |
| 25002021 | **731458** |
| 25002021 | **731434** |
| 25002031 | **731434** |
| 25002043 | **731635** |
| 25002045 | **730417** |
| 25002047 | **819193** |
| 25002050 | **731634** |
| 25002051 | **731635** |
| 25002058 | **731467** |
| 25002059 | **734111** |
| 25002063 | **730429** |
| 25002064 | **730417** |
| 25002067 | **731434** |
| 25002068 | **731473** |
| 25002069 | **731459** |
| 25002075 | **731469** |
| 25002076 | **731474** |
| 25002078 | **734624** |
| 25002080 | **731434** |
| 25002094 | **734747** |
| 25002100 | **734113** |
| 25002102 | **734114** |
| 25002110 | **734112** |
| 25002118 | **734716** |
| 25002119 | **734717** |
| 25002120 | **731434** |
| 25002121 | **731434** |
| 25002121 | **731469** |
| 25002122 | **731458** |
| 25002170 | **734703** |
| 25002179 | **735049** |
| 26500018 | **731458** |
| 27002024 | **731142** |
| 27002069 | **732475** |
| 27002069 | **734121** |
| 27002074 | **731472** |
| 27002090 | **731072** |
| 27002098 | **734120** |
| 27002100 | **732345** |
| 27002100 | **734195** |
| 27002134 | **734119** |
| 27002138 | **734119** |
| 27002139 | **732726** |
| 27002167 | **734126** |
| 27002190 | **734118** |
| 27002191 | **734207** |
| 28002020 | **816646** |
| 28002024 | **816647** |
| 28002056 | **734449** |
| 28002057 | **734448** |

| IAM | Valeo |
|---|---|
| **SERCK COOLING** | |
| 28002062 | **816647** |
| 29002002 | **734848** |
| 29004004 | **818730** |
| 30002067 | **883860** |
| 30002086 | **732741** |
| 30002128 | **730344** |
| 30002129 | **734795** |
| 30002131 | **734794** |
| 30002144 | **732447** |
| 30002147 | **731805** |
| 30002156 | **731807** |
| 30002175 | **730344** |
| 30002192 | **731291** |
| 30002212 | **732450** |
| 30002229 | **732451** |
| 30002237 | **734799** |
| 30002265 | **734668** |
| 30002286 | **732741** |
| 30002300 | **734689** |
| 30002301 | **734801** |
| 30002304 | **734796** |
| 30002308 | **734802** |
| 30002309 | **735234** |
| 30002311 | **735230** |
| 30002332 | **732706** |
| 30002342 | **734805** |
| 30002349 | **734877** |
| 30004285 | **817903** |
| 30004296 | **817907** |
| 32002042 | **731056** |
| 32002050 | **730454** |
| 32002078 | **731649** |
| 32002080 | **731462** |
| 32002081 | **734136** |
| 32002082 | **731639** |
| 32002084 | **731641** |
| 32002110 | **734145** |
| 32002113 | **732613** |
| 32002114 | **732613** |
| 32002117 | **734128** |
| 32002122 | **734129** |
| 32002123 | **734129** |
| 32002134 | **734141** |
| 32002138 | **732748** |
| 32002142 | **732524** |
| 32002143 | **734142** |
| 32002156 | **734143** |
| 32002157 | **734144** |
| 32002157 | **734424** |
| 32002164 | **735060** |
| 32002170 | **735059** |
| 37002029 | **730994** |
| 37002048 | **883751** |
| 37002092 | **883751** |
| 37002155 | **883920** |
| 37002173 | **731174** |
| 37002191 | **730994** |
| 37002214 | **731237** |
| 37002244 | **732347** |
| 37002246 | **731842** |
| 37002248 | **731840** |
| 37002248 | **735065** |
| 37002266 | **734242** |
| 37002272 | **732724** |
| 37002293 | **732550** |
| 37002296 | **732795** |
| 37002329 | **734388** |
| 37002330 | **732694** |
| 37002337 | **734353** |
| 37002338 | **732879** |
| 37002339 | **732876** |
| 37002340 | **732877** |
| 37002341 | **732878** |
| 37002346 | **734386** |
| 37002363 | **734382** |
| 37002380 | **734464** |
| 37002382 | **734331** |
| 37002396 | **734339** |

| IAM | Valeo |
|---|---|
| **SERCK COOLING** | |
| 37002408 | **735097** |
| 37004269 | **817917** |
| 37004361 | **817729** |
| 37004401 | **818701** |
| 37004404 | **818809** |
| 40002042 | **730898** |
| 40002080 | **730015** |
| 40002092 | **810915** |
| 40002096 | **730534** |
| 40002105 | **730015** |
| 40002109 | **730018** |
| 40002110 | **730015** |
| 40002124 | **730572** |
| 40002125 | **730575** |
| 40002132 | **730974** |
| 40002133 | **730974** |
| 40002135 | **730575** |
| 40002137 | **730630** |
| 40002142 | **730984** |
| 40002148 | **731010** |
| 40002176 | **731584** |
| 40002179 | **731575** |
| 40002188 | **732885** |
| 40002196 | **732567** |
| 40002198 | **732598** |
| 40002203 | **732892** |
| 40002203 | **732909** |
| 40002210 | **732906** |
| 40002216 | **732794** |
| 40002217 | **734282** |
| 40002222 | **732890** |
| 40002222 | **732908** |
| 40002234 | **734281** |
| 40002235 | **734279** |
| 40002236 | **732892** |
| 40002236 | **732895** |
| 40002238 | **732895** |
| 40002239 | **732893** |
| 40002247 | **732906** |
| 40002251 | **732890** |
| 40002253 | **732887** |
| 40002254 | **732909** |
| 40002256 | **734452** |
| 40002262 | **732882** |
| 40002265 | **734366** |
| 40002266 | **734423** |
| 40002267 | **734338** |
| 40002269 | **734463** |
| 40002277 | **732881** |
| 40004183 | **817632** |
| 40004204 | **817437** |
| 40004273 | **817578** |
| 40004279 | **817920** |
| 43002017 | **883959** |
| 43002078 | **810938** |
| 43002084 | **730140** |
| 43002239 | **732608** |
| 43002263 | **732050** |
| 43002268 | **732387** |
| 43002270 | **732721** |
| 43002290 | **732827** |
| 43002300 | **734728** |
| 43002306 | **732873** |
| 43002307 | **732874** |
| 43002308 | **732946** |
| 43002313 | **732902** |
| 43002321 | **732917** |
| 43002326 | **732737** |
| 43002360 | **732911** |
| 43002361 | **732919** |
| 43004089 | **817115** |
| 43004295 | **817926** |
| 43004296 | **817925** |
| 43004328 | **817554** |
| 43004346 | **818820** |
| 43004358 | **817636** |
| 43004359 | **817637** |
| 47002008 | **732123** |

| IAM | Valeo |
|---|---|
| **SERCK COOLING** | |
| 47002020 | **810965** |
| 47002028 | **732122** |
| 47002036 | **734830** |
| 47002037 | **734831** |
| 47002055 | **734831** |
| 47004047 | **817275** |
| 49002008 | **730542** |
| 49002019 | **730947** |
| 49002020 | **731271** |
| 49002023 | **730946** |
| 49002030 | **730947** |
| 49002030 | **731270** |
| 49002035 | **732317** |
| 51002007 | **731153** |
| 51002010 | **731438** |
| 51002016 | **734577** |
| 51002035 | **734211** |
| 51002036 | **734212** |
| 51002045 | **732410** |
| 51002046 | **734577** |
| 51002052 | **735211** |
| 52002006 | **730456** |
| 52002034 | **732750** |
| 52002035 | **732750** |
| 52002041 | **734835** |
| 52002046 | **734213** |
| 52002050 | **734835** |
| 52002055 | **734170** |
| 52002061 | **734171** |
| 52002063 | **734165** |
| 52002064 | **732719** |
| 52002070 | **735073** |
| 52002073 | **734161** |
| 52002074 | **734918** |
| 52002077 | **734214** |
| 52002079 | **734162** |
| 53002023 | **730466** |
| 53002040 | **731135** |
| 53002052 | **731135** |
| 53002065 | **731135** |
| 53002080 | **731095** |
| 53002080 | **731698** |
| 53002088 | **731122** |
| 53002116 | **730472** |
| 53002144 | **734181** |
| 53002154 | **731715** |
| 53002158 | **731135** |
| 53002200 | **732542** |
| 53002201 | **731830** |
| 53002204 | **731441** |
| 53002204 | **731685** |
| 53002205 | **731682** |
| 53002220 | **734466** |
| 53002227 | **732543** |
| 53002231 | **734176** |
| 53002235 | **734488** |
| 53002236 | **734489** |
| 53002282 | **735214** |
| 53002283 | **734401** |
| 53002284 | **734490** |
| 53002301 | **734183** |
| 53002306 | **734493** |
| 53002310 | **734204** |
| 53002323 | **734711** |
| 53002330 | **732420** |
| 53002332 | **734712** |
| 53002334 | **732417** |
| 53002336 | **734201** |
| 53002344 | **734173** |
| 53002347 | **734174** |
| 53002377 | **734189** |
| 53004365 | **817698** |
| 58002041 | **883849** |
| 58002059 | **883905** |
| 58002080 | **730485** |
| 58002088 | **734515** |
| 58002102 | **732437** |
| 58002179 | **732493** |

| IAM | Valeo |
|---|---|
| **SERCK COOLING** | |
| 58002180 | **732698** |
| 58002184 | **732786** |
| 58002204 | **734332** |
| 58002214 | **734741** |
| 58002217 | **732427** |
| 58002223 | **734335** |
| 58002249 | **732953** |
| 58004127 | **817764** |
| 58004136 | **817766** |
| 58004154 | **817937** |
| 58004157 | **817936** |
| 58004159 | **817765** |
| 58004163 | **817764** |
| 58004194 | **817486** |
| 58004221 | **818827** |
| 58004222 | **818828** |
| 58004246 | **817372** |
| 58004253 | **817634** |
| 58004254 | **817635** |
| 59002089 | **732369** |
| 59002117 | **734720** |
| 59002124 | **734320** |
| 59002127 | **810970** |
| 73002025 | **811056** |
| 73002050 | **730838** |
| 73002066 | **731375** |
| 73002076 | **732580** |
| 73002079 | **732582** |
| 73004087 | **817899** |
| 74002037 | **734827** |
| 76002003 | **732479** |
| 76002005 | **732863** |
| 76002010 | **732862** |
| 81002010 | **734765** |
| 81002016 | **734767** |
| 81002017 | **734764** |
| 81002046 | **734251** |
| 81002066 | **735157** |
| 81002067 | **735158** |
| 82002051 | **734255** |
| 82002053 | **734408** |
| 82002086 | **734253** |
| 82002095 | **734903** |
| 82002105 | **734965** |
| 82002110 | **734909** |
| 82002113 | **734905** |
| 82002148 | **734408** |
| 83002022 | **734788** |
| 83002033 | **734953** |
| 83002053 | **734990** |
| 2650017S | **731434** |
| **VAN WEZEL** | |
| 147744 | **696109** |
| 147745 | **696108** |
| 209746 | **698669** |
| 914749 | **698342** |
| 939750 | **698304** |
| 1004042 | **817856** |
| 1004066 | **817863** |
| 1620744 | **698484** |
| 1620746 | **696106** |
| 1620747 | **698484** |
| 1620751 | **696197** |
| 1709746 | **698786** |
| 1709747 | **698788** |
| 1755748 | **698178** |
| 1830749 | **696160** |
| 3004075 | **817624** |
| 4029746 | **696238** |
| 4036749 | **698303** |
| 4319746 | **698007** |
| 4321749 | **698007** |
| 4325748 | **698085** |
| 4336746 | **698005** |
| 4338746 | **698316** |
| 4338747 | **698004** |
| 4342747 | **698317** |

| IAM | Valeo |
|---|---|
| **VAN WEZEL** | |
| 4342748 | **698015** |
| 4345747 | **698084** |
| 6004177 | **817387** |
| 6004253 | **817877** |
| 6004265 | **818714** |
| 6004346 | **818796** |
| 7004096 | **817736** |
| 9004043 | **816699** |
| 9004267 | **818227** |
| 9004268 | **818769** |
| 9004269 | **817706** |
| 17004320 | **818224** |
| 17004321 | **818824** |
| 17004337 | **818229** |
| 17004353 | **818897** |
| 17004360 | **818897** |
| 17004389 | **818721** |
| 18004308 | **817885** |
| 18004354 | **818718** |
| 18004438 | **818717** |
| 28004004 | **816732** |
| 28004005 | **816731** |
| 28004016 | **816846** |
| 28004054 | **816736** |
| 28004055 | **816733** |
| 28004079 | **818778** |
| 30004354 | **818731** |
| 30004357 | **817908** |
| 30004368 | **818806** |
| 30004370 | **818808** |
| 30004371 | **818807** |
| 30004396 | **817994** |
| 31004172 | **818753** |
| 37004270 | **817918** |
| 37004439 | **817998** |
| 37004491 | **818722** |
| 37004492 | **817730** |
| 40004332 | **818837** |
| 40004334 | **818841** |
| 40004335 | **818836** |
| 40004336 | **818853** |
| 40004337 | **818866** |
| 40004338 | **818209** |
| 40004342 | **817638** |
| 40004343 | **818226** |
| 40004344 | **818895** |
| 40004345 | **817639** |
| 43004124 | **817627** |
| 43004298 | **817942** |
| 43004363 | **817927** |
| 43004390 | **818772** |
| 43004397 | **817828** |
| 43004423 | **818835** |
| 43004456 | **818771** |
| 47004066 | **818840** |
| 47004068 | **818818** |
| 49004036 | **817558** |
| 58004019 | **817934** |
| 58004158 | **818719** |
| 58004305 | **818838** |
| 59004134 | **818816** |
| 73004041 | **817897** |
| 73004086 | **817900** |
| **VISTEON** | |
| 1010001007 | **730968** |
| 1010001009 | **730594** |
| 1010001010 | **730594** |
| 1010001011 | **730566** |
| 1010001013 | **730590** |
| 1010001014 | **730483** |
| 1010001017 | **730858** |
| 1010001018 | **730857** |
| 1010001019 | **730856** |
| 1010001020 | **730856** |
| 1010001022 | **730856** |
| 1010001023 | **730484** |
| 1010001023 | **730559** |

| IAM | Valeo |
|---|---|
| **VISTEON** | |
| 1010001024 | **730559** |
| 1010001025 | **730484** |
| 1010001026 | **730484** |
| 1010001027 | **731299** |
| 1010001028 | **730124** |
| 1010001029 | **819176** |
| 1010001030 | **731492** |
| 1010001031 | **730124** |
| 1010001034 | **730559** |
| 1010001037 | **734862** |
| 1010001040 | **731781** |
| 1010001042 | **731782** |
| 1010001043 | **731779** |
| 1010001044 | **731724** |
| 1010001048 | **731734** |
| 1010001049 | **731735** |
| 1010001050 | **731617** |
| 1010001052 | **731736** |
| 1010001053 | **731300** |
| 1010001054 | **731257** |
| 1010001056 | **734303** |
| 1010001058 | **732003** |
| 1010001059 | **734772** |
| 1010001060 | **731992** |
| 1010001061 | **732497** |
| 1010001062 | **732732** |
| 1010001063 | **732731** |
| 1010001064 | **735046** |
| 1010001065 | **732735** |
| 1010001070 | **731011** |
| 1010001070 | **731550** |
| 1010001071 | **883857** |
| 1010001072 | **730375** |
| 1010001074 | **811381** |
| 1010001075 | **811056** |
| 1010001077 | **731013** |
| 1010001078 | **732606** |
| 1010001083 | **816658** |
| 1010001084 | **816656** |
| 1010001085 | **730140** |
| 1010001086 | **883921** |
| 1010001087 | **883958** |
| 1010001088 | **730370** |
| 1010001091 | **730946** |
| 1010001092 | **730947** |
| 1010001093 | **730948** |
| 1010001095 | **731268** |
| 1010001097 | **730955** |
| 1010001098 | **730503** |
| 1010001099 | **730504** |
| 1010001100 | **883818** |
| 1010001101 | **883819** |
| 1010001102 | **883820** |
| 1010001104 | **883727** |
| 1010001105 | **730629** |
| 1010001106 | **883869** |
| 1010001108 | **883871** |
| 1010001109 | **730485** |
| 1010001111 | **816703** |
| 1010001114 | **731127** |
| 1010001115 | **731032** |
| 1010001117 | **731265** |
| 1010001118 | **731005** |
| 1010001119 | **731007** |
| 1010001120 | **731008** |
| 1010001121 | **731006** |
| 1010001122 | **730956** |
| 1010001123 | **730954** |
| 1010001125 | **731385** |
| 1010001126 | **731386** |
| 1010001127 | **883727** |
| 1010001130 | **883863** |
| 1010001131 | **819260** |
| 1010001134 | **732440** |
| 1010001135 | **730349** |
| 1010001136 | **819259** |
| 1010001137 | **731501** |
| 1010001138 | **731505** |

| IAM | Valeo |
|---|---|
| **VISTEON** | |
| 1010001139 | **731422** |
| 1010001140 | **731428** |
| 1010001142 | **731503** |
| 1010001144 | **731537** |
| 1010001145 | **731756** |
| 1010001149 | **883864** |
| 1010001152 | **731606** |
| 1010001155 | **883428** |
| 1010001157 | **731606** |
| 1010001158 | **731411** |
| 1010001163 | **734586** |
| 1010001164 | **883820** |
| 1010001165 | **732437** |
| 1010001166 | **731267** |
| 1010001167 | **731268** |
| 1010001170 | **731007** |
| 1010001171 | **732397** |
| 1010001173 | **731606** |
| 1010001174 | **731616** |
| 1010001175 | **730117** |
| 1010001177 | **731595** |
| 1010001178 | **883720** |
| 1010001182 | **734291** |
| 1010001183 | **734293** |
| 1010001185 | **734292** |
| 1010001186 | **734286** |
| 1010001187 | **734287** |
| 1010001188 | **734288** |
| 1010001189 | **734785** |
| 1010001194 | **734272** |
| 1010001195 | **734273** |
| 1010001196 | **734274** |
| 1010001197 | **734696** |
| 1010001202 | **734468** |
| 1010001206 | **731639** |
| 1010001207 | **731638** |
| 1010001208 | **734114** |
| 1010001234 | **734699** |
| 1010001236 | **734392** |
| 1010001238 | **734321** |
| 1010001240 | **734319** |
| 1010001241 | **734320** |
| 1010001242 | **734272** |
| 1010001243 | **734272** |
| 1010001244 | **734273** |
| 1010001246 | **734274** |
| 1010001248 | **735021** |
| 1010001250 | **735045** |
| 1010001256 | **735048** |
| 1010001258 | **735271** |
| 1012001004 | **817888** |
| 1012001005 | **818800** |
| 1012001006 | **817891** |
| 1012001007 | **818717** |
| 1012001008 | **818802** |
| 1012001010 | **818794** |
| 1012001011 | **818797** |
| 1012001015 | **818210** |
| 1012001016 | **818801** |

| IAM | Valeo |
|---|---|

CODE TECH.> Valeo

| CODE TECH. | Valeo |
|---|---|
| 007126K/S | **812253** |
| 033809XD | **812225** |
| 034313V0 | **812308** |
| 3TA118A | **732765** |
| 602278D0 | **812134** |
| 667210T0 | **812309** |
| 6TA075A | **732004** |
| 6TA076A | **732005** |
| 6TA077A | **732006** |
| 6TA089A | **731734** |
| 6TA093A | **731617** |
| 6TA099A | **732624** |
| 6TA100A | **732626** |
| 6TA114C | **732864** |
| 984202Q | **812254** |
| CA003 | **816835** |
| CA004 | **816850** |
| CA005 | **816885** |
| CA006 | **816852** |
| CA1002 | **816865** |
| CA1004 | **816839** |
| CA1007 | **816863** |
| CA1011 | **816921** |
| CA1013 | **816866** |
| CA1014 | **816803** |
| CA1015 | **816756** |
| CA1021 | **816984** |
| CA1022 | **816987** |
| CA1023 | **816986** |
| CA1029 | **817065** |
| CA1031 | **816891** |
| CA1032 | **816945** |
| CA1061 | **816996** |
| CA1091 | **817067** |
| CA1092 | **816985** |
| CA1093 | **817042** |
| CA1094 | **817171** |
| CA1107 | **817061** |
| CA1108 | **817379** |
| CA1113 | **817577** |

| CODE TECH. | Valeo |
|---|---|
| CA1115 | **816912** |
| CA1117 | **817644** |
| CA1120 | **817384** |
| CA1190 | **816981** |
| CA1191 | **817235** |
| CA1192 | **816949** |
| CA1195 | **816948** |
| CA1197 | **816902** |
| CA1202 | **816924** |
| CA1206 | **817244** |
| CA1207 | **817246** |
| CA1209 | **817245** |
| CA1241 | **817463** |
| CA1245 | **817582** |
| CA1246 | **817428** |
| CA1247 | **817197** |
| CA1248 | **817601** |
| CA1252 | **817375** |
| CA1254 | **817547** |
| CA1255 | **817526** |
| CA1256 | **817579** |
| CA1257 | **817602** |
| CA1258 | **817647** |
| CA1259 | **817711** |
| CA1261 | **817385** |
| CA1262 | **817386** |
| CA1263 | **817648** |
| CA1265 | **818003** |
| CA1269 | **817465** |
| CA1321 | **817464** |
| CA1322 | **817524** |
| CA1351 | **817827** |
| CA1411 | **817608** |
| CA1413 | **817742** |
| CA1414 | **817712** |
| CA1416 | **817668** |
| CA1421 | **817645** |
| CA1424 | **817283** |
| CA1431 | **817687** |
| CA1437 | **817508** |

| CODE TECH. | Valeo |
|---|---|
| CA1440 | **817689** |
| CA1443 | **817809** |
| CA1456 | **818175** |
| CA1463 | **818005** |
| CA1464 | **817703** |
| CA1469 | **814061** |
| CA1470 | **818013** |
| CA1472 | **817661** |
| CA1473 | **817662** |
| CA1474 | **817646** |
| CA1475 | **818014** |
| CA1476 | **817739** |
| CA1479 | **818002** |
| CA1481 | **818000** |
| CA1482 | **818001** |
| CA1483 | **818173** |
| CA1531 | **818165** |
| CA1532 | **818166** |
| CA1538 | **814051** |
| CA1542 | **817824** |
| CA1546 | **818162** |
| CA1556 | **814077** |
| CA2005 | **817701** |
| CA2013 | **818015** |
| F133260G | **812029** |
| F602984R | **508555** |
| F603801B | **812048** |
| F650541W | **812013** |
| F652759Q | **812169** |
| F658065U | **812181** |
| F660992B | **812215** |
| F661407Q | **812212** |
| F664443Q | **812234** |
| F664447A | **812235** |
| F665426A | **812247** |
| F665733E | **812255** |
| F665736M | **812256** |
| F666359R | **812250** |
| F667213K | **812249** |
| F667511B | **812268** |

| CODE TECH. | Valeo |
|---|---|
| F828947Z | **812002** |
| F833558J | **812157** |
| FS1003 | **698182** |
| FS1011 | **698425** |
| FS1032 | **698320** |
| FS1033 | **698322** |
| FS1036 | **698321** |
| FS1055 | **698344** |
| FS107 | **698562** |
| FS1116 | **698362** |
| FS1120 | **698179** |
| FS1121 | **698178** |
| FS1129 | **698180** |
| FS1149 | **698155** |
| FS1207 | **698552** |
| FS1212 | **698409** |
| FS1220 | **696020** |
| FS1234 | **698482** |
| FS1248 | **698483** |
| FS1391 | **698786** |
| FS1402 | **698788** |
| FS1411 | **698484** |
| FS1452 | **698542** |
| FS1462 | **696022** |
| FS1455 | **696085** |
| FS1456 | **696012** |
| FS1554 | **696023** |
| FS1572 | **696091** |
| FS1576 | **696238** |
| FS2031 | **696229** |
| HA054 | **816748** |
| HA1124 | **816666** |
| HA1181 | **817643** |
| HA1182 | **817704** |
| HA1183 | **817705** |
| HA146 | **816751** |
| HA177 | **817649** |
| IA1007 | **817380** |
| IA1008 | **817437** |
| IA1009 | **817554** |

| CODE TECH. | Valeo |
|---|---|
| IA1010 | **818701** |
| IA1031 | **816890** |
| IA1036 | **816959** |
| IA1043 | **817487** |
| IA1044 | **817488** |
| IA1045 | **817438** |
| IA1098 | **817457** |
| IA1074 | **817115** |
| IA1076 | **817650** |
| IA1078 | **817651** |
| IA1080 | **817640** |
| IA1085 | **817654** |
| IA1087 | **817558** |
| IA1095 | **817639** |
| IA1097 | **817698** |
| IA1098 | **817457** |
| IA1174 | **817486** |
| IA1180 | **817556** |
| IA1181 | **817238** |
| IA1305 | **817637** |
| IA1309 | **817653** |
| IA1312 | **817555** |
| IA1317 | **817636** |
| IA1319 | **817638** |
| IA1320 | **817635** |
| IA1321 | **817634** |
| IA1324 | **817736** |
| IA1327 | **817994** |
| IA1330 | **818772** |
| IA1332 | **817729** |
| IA1335 | **817275** |
| IA1340 | **817730** |
| IA1350 | **818838** |
| IA1402 | **817828** |
| IA1405 | **817998** |
| IA1413 | **818732** |
| IA1421 | **818835** |
| IA1422 | **818771** |
| IA1426 | **817999** |
| IA1428 | **818829** |

| CODE TECH. | Valeo |
|---|---|
| IA1430 | **818769** |
| IA1432 | **817845** |
| IA1434 | **818836** |
| IA1435 | **818853** |
| IA1436 | **818837** |
| IA1437 | **818841** |
| IA1452 | **818878** |
| IA1453 | **818869** |
| IA1454 | **818866** |
| IA1496 | **818870** |
| IA254 | **816610** |
| IA560 | **816755** |
| IM001 | **816823** |
| IM002 | **816851** |
| IM1002 | **816918** |
| IM1003 | **816889** |
| IM1006 | **816919** |
| IM1007 | **816836** |
| IM1010 | **818722** |
| IM1031 | **817372** |
| IM1096 | **817578** |
| IM1097 | **817697** |
| IM1128 | **818818** |
| IW002 | **817204** |
| MF1001 | **698323** |
| MF1010 | **698187** |
| MF1011 | **698324** |
| MF1012 | **698350** |
| MF1028 | **698844** |
| MF1029 | **696025** |
| MF1075 | **696028** |
| MF1076 | **696029** |
| MF1077 | **696019** |
| MF1078 | **696024** |
| MF1079 | **696001** |
| MF1080 | **698412** |
| MF1083 | **696026** |
| MF1084 | **696027** |
| MF1085 | **696002** |
| MF1086 | **696003** |

| CODE TECH. | Valeo |
|---|---|
| MF1087 | **696079** |
| MF1088 | **696080** |
| MF1089 | **696030** |
| MF1121 | **698611** |
| MF1122 | **698612** |
| MF1123 | **698609** |
| MF1124 | **698610** |
| MF1125 | **696018** |
| MF1126 | **696017** |
| MF1129 | **696082** |
| MF1130 | **696083** |
| MF1131 | **698424** |
| MF2004 | **696242** |
| MF2005 | **696243** |
| MM1001 | **733075** |
| RA002 | **730958** |
| RA003 | **730959** |
| RA0110930 | **734692** |
| RA1006 | **730494** |
| RA1008 | **731380** |
| RA1025 | **732063** |
| RA1035 | **732741** |
| RA1036 | **732785** |
| RA1037 | **732719** |
| RA1041 | **732849** |
| RA1044 | **732694** |
| RA1105 | **732569** |
| RA1106 | **732618** |
| RA1107 | **732567** |
| RA1108 | **732617** |
| RA1109 | **731910** |
| RA1117 | **732599** |
| RA1119 | **732620** |
| RA1122 | **732570** |
| RA1123 | **732387** |
| RA1127 | **732846** |
| RA1164 | **732427** |
| RA1165 | **732952** |
| RA1168 | **732790** |
| RA1169 | **732791** |

| CODE TECH. | Valeo |
|---|---|
| RA1170 | **732786** |
| RA1172 | **732957** |
| RA1191 | **732582** |
| RA1196 | **732883** |
| RA1197 | **732598** |
| RA1200 | **732798** |
| RA1206 | **732880** |
| RA1207 | **732944** |
| RA1215 | **732867** |
| RA1218 | **732876** |
| RA1219 | **732947** |
| RA1220 | **732877** |
| RA1281 | **732878** |
| RA1285 | **732881** |
| RA1286 | **732945** |
| RA1287 | **732737** |
| RA1292 | **732717** |
| RA1293 | **732953** |
| RA1298 | **732692** |
| RA1299 | **732740** |
| RA1307 | **732911** |
| RA1312 | **734302** |
| RA1322 | **732742** |
| RA1323 | **732900** |
| RA1325 | **732890** |
| RA1326 | **732891** |
| RA1327 | **732892** |
| RA1328 | **732893** |
| RA1329 | **732894** |
| RA1330 | **732888** |
| RA1332 | **732895** |
| RA1333 | **732896** |
| RA1334 | **732904** |
| RA1335 | **732905** |
| RA1336 | **732906** |
| RA1338 | **734339** |
| RA1339 | **734345** |
| RA1340 | **732960** |
| RA1341 | **734330** |
| RA1346 | **734412** |

| CODE TECH. | Valeo |
|---|---|
| RA1357 | **734331** |
| RA1365 | **734333** |
| RA1366 | **735084** |
| RA1373 | **732909** |
| RA1374 | **732910** |
| RA1387 | **732939** |
| RA1392 | **734945** |
| RA1393 | **735088** |
| RA1394 | **735089** |
| RA1399 | **734438** |
| RA1405 | **732956** |
| RA1408 | **734398** |
| RA1410 | **732946** |
| RA1414 | **732855** |
| RA1415 | **732743** |
| RA1422 | **734941** |
| RA1423 | **734922** |
| RA1428 | **734943** |
| RA1456 | **732108** |
| RA1457 | **810965** |
| RA1460 | **732120** |
| RA1461 | **732121** |
| RA1485 | **731846** |
| RA1486 | **732349** |
| RA1487 | **732110** |
| RA1489 | **732122** |
| RA1490 | **732123** |
| RA1505 | **730183** |
| RA1506 | **730180** |
| RA1507 | **731538** |
| RA1508 | **732071** |
| RA1509 | **730973** |
| RA1510 | **730184** |
| RA1513 | **731129** |
| RA1530 | **735156** |
| RA1531 | **734461** |
| RA1532 | **734462** |
| RA1533 | **735112** |
| RA1537 | **734946** |
| RA1544 | **734338** |

| CODE TECH. | Valeo |
|---|---|
| RA1545 | **734366** |
| RA1546 | **734463** |
| RA1548 | **734423** |
| RA1561 | **735091** |
| RA1562 | **735185** |
| RA1563 | **735182** |
| RA1584 | **734932** |
| RA1590 | **735114** |
| RA1594 | **735116** |
| RA164 | **810952** |
| RA1675 | **735133** |
| RA1677 | **735179** |
| RA1794 | **735180** |
| RA194 | **810933** |
| RA2000 | **731529** |
| RA2001 | **730548** |
| RA2004 | **732013** |
| RA2010 | **735188** |
| RA2023 | **735181** |
| RA2027 | **734448** |
| RA2032 | **735256** |
| RA2034 | **732248** |
| RA2038 | **732696** |
| RA2040 | **730838** |
| RA2041 | **735041** |
| RA2047 | **731593** |
| RA2053 | **730319** |
| RA2073 | **735115** |
| RA255 | **810926** |
| RA264 | **810882** |
| RA287 | **810947** |
| RA313 | **819368** |
| RA351 | **810835** |
| RA352 | **810889** |
| RA383 | **810927** |
| RA423 | **810869** |
| RA439 | **810851** |
| RA487 | **810843** |
| RA493 | **810919** |
| RA552 | **810836** |

| CODE TECH. | Valeo |
|---|---|
| RA571 | **810912** |
| RA595 | **810887** |
| RA596 | **810888** |
| RA597 | **810938** |
| RA612 | **810995** |
| RA639 | **811387** |
| RA662 | **730368** |
| RA691 | **819431** |
| RA696 | **730366** |
| RA698 | **730506** |
| RA779 | **730510** |
| RA804 | **810954** |
| RA814 | **810955** |
| RA8140060 | **818724** |
| RA820 | **730961** |
| RA821 | **730549** |
| RA824 | **730498** |
| RAB001 | **731530** |
| RAB003 | **731179** |
| RAB004 | **730502** |
| RAB005 | **734322** |
| RAB006 | **734288** |
| RAB007 | **734292** |
| RAB008 | **734303** |
| RAB009 | **734276** |
| RAB010 | **734289** |
| RAB011 | **734291** |
| RAB012 | **734293** |
| RAB013 | **734353** |
| RAB015 | **819387** |
| RAB016 | **731509** |
| RAB017 | **731508** |
| RAB018 | **732593** |
| RAB019 | **734255** |
| RAB020 | **819412** |
| RAB021 | **819413** |
| RAB022 | **819201** |
| RAB023 | **730344** |
| RAB024 | **732460** |
| RAB025 | **819418** |

| CODE TECH. | Valeo |
|---|---|
| RAB026 | **731237** |
| RAB030 | **732462** |
| RAB031 | **732099** |
| RAB032 | **730365** |
| RAB038 | **734894** |
| RAB039 | **734895** |
| RAB040 | **734896** |
| RAB045 | **731520** |
| RAB046 | **734242** |
| RAB052 | **732050** |
| RAB053 | **730999** |
| RAB055 | **735043** |
| RC1005 | **732072** |
| RC1013 | **732049** |
| RC1049 | **731161** |
| RC1061 | **731531** |
| RC1092 | **730940** |
| RC1099 | **819260** |
| RC1101 | **730349** |
| RM1727 | **732735** |
| RC1159 | **732550** |
| RA2076 | **732919** |
| RC140 | **732787** |
| RC156 | **732623** |
| RM001 | **730577** |
| RM002 | **730927** |
| RM003 | **816715** |
| RM007 | **730630** |
| RM1001 | **731495** |
| RM1005 | **730975** |
| RM1010 | **731009** |
| RM1011 | **731010** |
| RM1019 | **731378** |
| RM1020 | **731379** |
| RM1024 | **730515** |
| RM1026 | **731574** |
| RM1027 | **731383** |
| RM1028 | **731381** |
| RM1030 | **731575** |
| RM1032 | **730955** |

| CODE TECH. | Valeo |
|---|---|
| RM1033 | **730956** |
| RM1034 | **730954** |
| RM1035 | **731007** |
| RM1036 | **731008** |
| RM1039 | **731385** |
| RM1040 | **731386** |
| RM1041 | **731387** |
| RM1042 | **731616** |
| RM1043 | **731127** |
| RM1044 | **731025** |
| RM1045 | **731607** |
| RM1058 | **731393** |
| RM1059 | **731537** |
| RM106 | **731282** |
| RM1061 | **731525** |
| RM1068 | **732839** |
| RM1081 | **731012** |
| RM1082 | **731013** |
| RM1083 | **731570** |
| RM1084 | **731268** |
| RM1085 | **731266** |
| RM1086 | **731265** |
| RM1087 | **731271** |
| RM1088 | **731269** |
| RM1089 | **731270** |
| RM1091 | **730947** |
| RM1097 | **731296** |
| RM1098 | **731295** |
| RM1100 | **730857** |
| RM1101 | **731384** |
| RM1102 | **731298** |
| RM1104 | **810915** |
| RM1105 | **731382** |
| RM1107 | **731498** |
| RM1108 | **731526** |
| RM1112 | **731552** |
| RM1118 | **731744** |
| RM1122 | **732316** |
| RM1125 | **732051** |
| RM1126 | **732517** |

| CODE TECH. | Valeo |
|---|---|
| RM1128 | **732621** |
| RM1129 | **732559** |
| RM1130 | **732534** |
| RM1131 | **731264** |
| RM1132 | **731267** |
| RM1135 | **731728** |
| RM1139 | **730117** |
| RM1141 | **731551** |
| RM1143 | **731550** |
| RM1144 | **819176** |
| RM1145 | **732317** |
| RM1146 | **730119** |
| RM1149 | **730595** |
| RM1151 | **732698** |
| RM1154 | **819259** |
| RM1155 | **810892** |
| RM1156 | **731981** |
| RM1157 | **732563** |
| RM1158 | **732564** |
| RM1159 | **732710** |
| RM116 | **731304** |
| RM1164 | **816658** |
| RM1165 | **730055** |
| RM1166 | **730551** |
| RM1168 | **731735** |
| RM1169 | **732003** |
| RM1170 | **731736** |
| RM1172 | **732758** |
| RM1173 | **732759** |
| RM1174 | **730565** |
| RM1175 | **731212** |
| RM1177 | **732723** |
| RM1178 | **732724** |
| RM1179 | **732551** |
| RM1180 | **732549** |
| RM1182 | **731605** |
| RM1185 | **731606** |
| RM1186 | **732177** |
| RM1193 | **732797** |
| RM1194 | **732397** |

| CODE TECH. | Valeo |
|---|---|
| RM1196 | **732845** |
| RM1213 | **732535** |
| RM1219 | **732389** |
| RM1224 | **732720** |
| RM1231 | **732761** |
| RM1250 | **732830** |
| RM1253 | **732831** |
| RM1255 | **732794** |
| RM1261 | **732873** |
| RM1262 | **732874** |
| RM1263 | **732853** |
| RM1264 | **732811** |
| RM1267 | **732902** |
| RM1268 | **732903** |
| RM127 | **731374** |
| RM1336 | **732729** |
| RM1338 | **732731** |
| RM1339 | **732732** |
| RM134 | **731375** |
| RM1340 | **731815** |
| RM1341 | **731818** |
| RM1342 | **731816** |
| RM1343 | **732795** |
| RM1348 | **731032** |
| RM1350 | **731527** |
| RM1351 | **731528** |
| RM1352 | **731847** |
| RM1353 | **732347** |
| RM1355 | **731848** |
| RM1356 | **732348** |
| RM1357 | **732825** |
| RM1358 | **732826** |
| RM136 | **730976** |
| RM1361 | **732824** |
| RM1365 | **732827** |
| RM1367 | **731291** |
| RM1368 | **731292** |
| RM1369 | **731293** |
| RM137 | **731558** |
| RM1370 | **731294** |

| CODE TECH. | Valeo |
|---|---|
| RM1371 | **732807** |
| RM1372 | **732882** |
| RM1377 | **731909** |
| RM138 | **731562** |
| RM1382 | **732523** |
| RM1385 | **732924** |
| RM1387 | **732925** |
| RM1399 | **732948** |
| RM141 | **731572** |
| RM1425 | **732872** |
| RM1428 | **732687** |
| RM1430 | **732817** |
| RM1431 | **732866** |
| RM1441 | **732870** |
| RM1442 | **732917** |
| RM1443 | **732918** |
| RM1444 | **732721** |
| RM1450 | **732885** |
| RM1452 | **732886** |
| RM1453 | **732887** |
| RM1452 | **732886** |
| RM1456 | **734420** |
| RM1457 | **734447** |
| RM1458 | **732908** |
| RM1471 | **732828** |
| RM1473 | **732718** |
| RM1474 | **732863** |
| RM1475 | **732862** |
| RM1490 | **731174** |
| RM1491 | **731175** |
| RM1493 | **732913** |
| RM1506 | **730993** |
| RM1507 | **730396** |
| RM1508 | **730858** |
| RM1509 | **732963** |
| RM1511 | **734229** |
| RM1512 | **732421** |
| RM1513 | **731176** |
| RM1514 | **730984** |
| RM1515 | **730985** |

| CODE TECH. | Valeo |
|---|---|
| RM1516 | **730507** |
| RM1517 | **731181** |
| RM1518 | **731186** |
| RM1520 | **731180** |
| RM1525 | **732854** |
| RM1530 | **732923** |
| RM1536 | **734923** |
| RM1537 | **734924** |
| RM1579 | **734346** |
| RM1582 | **734921** |
| RM1583 | **735125** |
| RM1586 | **735135** |
| RM1588 | **735134** |
| RM1591 | **731166** |
| RM1592 | **731165** |
| RM1596 | **734926** |
| RM1597 | **734927** |
| RM1598 | **734928** |
| RM1599 | **734929** |
| RM1600 | **734930** |
| RM1601 | **735020** |
| RM1606 | **734981** |
| RM1607 | **734982** |
| RM161 | **730520** |
| RM1611 | **735118** |
| RM1612 | **735119** |
| RM162 | **730519** |
| RM1620 | **732879** |
| RM163 | **732218** |
| RM164 | **731592** |
| RM165 | **731591** |
| RM167 | **731302** |
| RM168 | **731303** |
| RM172 | **732812** |
| RM1721 | **730983** |
| RM1722 | **730508** |
| RM1723 | **731391** |
| RM1725 | **731389** |
| RM1726 | **731177** |
| RM173 | **730997** |

| CODE TECH. | Valeo |
|---|---|
| RM1731 | **730856** |
| RM1732 | **730124** |
| RM1733 | **732577** |
| RM1734 | **731743** |
| RM1735 | **731594** |
| RM1736 | **731595** |
| RM1737 | **730542** |
| RM174 | **731559** |
| RM1740 | **732565** |
| RM1742 | **730994** |
| RM1743 | **730395** |
| RM1744 | **731022** |
| RM1745 | **731170** |
| RM1746 | **731168** |
| RM1748 | **819428** |
| RM1749 | **730982** |
| RM175 | **811073** |
| RM1750 | **731289** |
| RM1751 | **731297** |
| RM1752 | **730634** |
| RM1753 | **730015** |
| RM1754 | **732361** |
| RM1755 | **734272** |
| RM1756 | **734274** |
| RM1757 | **734335** |
| RM1758 | **734332** |
| RM1759 | **731611** |
| RM175 | **811073** |
| RM1760 | **730125** |
| RM1759 | **731611** |
| RM1763 | **730995** |
| RM1764 | **730309** |
| RM1766 | **731283** |
| RM177 | **811071** |
| RM1774 | **732548** |
| RM179 | **811392** |
| RM180 | **730489** |
| RM1822 | **735184** |
| RM1824 | **735175** |
| RM1835 | **735121** |

| CODE TECH. | Valeo |
|---|---|
| RM1836 | **735120** |
| RM1837 | **735186** |
| RM1838 | **735284** |
| RM177 | **811071** |
| RM187 | **731561** |
| RM190 | **732788** |
| RM196 | **732012** |
| RM197 | **732011** |
| RM199 | **732505** |
| RM2005 | **731306** |
| RM2006 | **730040** |
| RM2008 | **811380** |
| RM2009 | **883765** |
| RM201 | **732503** |
| RM2011 | **734231** |
| RM2014 | **734449** |
| RM2016 | **735171** |
| RM2017 | **735172** |
| RM2018 | **810949** |
| RM2019 | **734319** |
| RM2020 | **734320** |
| RM2021 | **734321** |
| RM2022 | **735042** |
| RM2023 | **735097** |
| RM2024 | **732685** |
| RM2025 | **735283** |
| RM2027 | **730980** |
| RM2028 | **730981** |
| RM2029 | **731251** |
| RM203 | **732580** |
| RM2043 | **735281** |
| RM2045 | **735282** |
| RM205 | **732557** |
| RM2052 | **732175** |
| RM206 | **732688** |
| RM209 | **732789** |
| RM212 | **732578** |
| RM213 | **732705** |
| RM214 | **732792** |
| RM216 | **732851** |

| CODE TECH. | Valeo |
|---|---|
| T188 | **812012** |
| T195 | **883982** |
| T224 | **812030** |
| T225 | **812031** |
| T262 | **812014** |
| T272 | **883976** |
| T277 | **883965** |
| T278 | **812016** |
| T284 | **883790** |
| T285 | **883971** |
| T303 | **812028** |
| T310 | **811075** |
| T346 | **812032** |
| T348 | **812034** |
| T350 | **812036** |
| T351 | **812037** |
| T49 | **883468** |
| T54 | **883520** |
| T58 | **883739** |
| TA058 | **883463** |
| TA079 | **883729** |
| TA100 | **883718** |
| TA117 | **883751** |
| TA137 | **883809** |
| TA141 | **883799** |
| TA148 | **883767** |
| TA149 | **883771** |
| TA153 | **883773** |
| TA164 | **883774** |
| TA176 | **883282** |
| TA178 | **883686** |
| TA181 | **883959** |
| TA182 | **883954** |
| TA186 | **883956** |
| TA234 | **883876** |
| TA235 | **816700** |
| TA309 | **883857** |
| TA340 | **883818** |
| TA341 | **883819** |
| TA342 | **883820** |

| CODE TECH. | Valeo |
|---|---|
| TA343 | **883727** |
| TA344 | **883720** |
| TA348 | **883849** |
| TA354 | **883851** |
| TA356 | **883858** |
| TA357 | **883859** |
| TA358 | **883852** |
| TA362 | **730990** |
| TA370 | **883920** |
| TA371 | **883464** |
| TA372 | **883715** |
| TA384 | **883428** |
| TA386 | **883811** |
| TA387 | **883812** |
| TA388 | **883813** |
| TA396 | **883856** |
| TA400 | **883921** |
| TA407 | **730370** |
| TA426 | **883827** |
| TA431 | **883806** |
| TA438 | **811389** |
| TA439 | **883053** |
| TA440 | **811010** |
| TA442 | **811386** |
| TA443 | **811381** |
| TA449 | **811056** |
| TA456 | **883958** |
| TA463 | **883863** |
| TA464 | **883864** |
| TA475 | **883877** |
| TA478 | **883869** |
| TA479 | **883870** |
| TA480 | **883871** |
| TA482 | **816554** |
| TA483 | **730485** |
| TA485 | **883878** |
| TA487 | **816655** |
| TA489 | **883875** |
| TA490 | **883860** |
| TA499 | **883880** |

| CODE TECH. | Valeo |
|---|---|
| TA505 | **816552** |
| TA506 | **883881** |
| TA511 | **816654** |
| TA512 | **816656** |
| TA513 | **816657** |
| TA518 | **816555** |
| TA519 | **730372** |
| TA528 | **811067** |
| TA549 | **811068** |
| TA555 | **883825** |
| TA563 | **816710** |
| TA591 | **816707** |
| TA605 | **816716** |
| TA607 | **730360** |
| TA608 | **730361** |
| TA609 | **730362** |
| TA625 | **730491** |
| TA628 | **816703** |
| TA633 | **730540** |
| TA643 | **730572** |
| TA650 | **730503** |
| TA651 | **730505** |
| TA656 | **730633** |
| TA662 | **730960** |
| TA663 | **730957** |
| TA664 | **730499** |
| TA668 | **731128** |
| TA672 | **730512** |
| TA676 | **730629** |
| TA683 | **730991** |
| TA738 | **811069** |
| TA739 | **811070** |
| TA746 | **811385** |
| TA748 | **816711** |
| TA812 | **731276** |
| TA814 | **731278** |
| TA817 | **731281** |
| TA821 | **730483** |
| TA822 | **730484** |
| TA823 | **730945** |

| CODE TECH. | Valeo |
|---|---|
| TA824 | **730946** |
| TA827 | **730948** |
| TA828 | **730632** |
| TA841 | **961149** |
| TA849 | **816706** |
| TA850 | **883866** |
| TA876 | **730569** |
| TA878 | **730575** |
| TA881 | **730504** |
| TA884 | **730971** |
| TA885 | **731005** |
| TA886 | **731006** |
| TA890 | **730934** |
| TA891 | **730363** |
| TA900 | **730972** |
| XS1101 | **817751** |
| XS1103 | **817752** |
| XS1108 | **817756** |
| XS1110 | **817748** |
| XS1112 | **817757** |
| XS1113 | **817755** |
| XS1125 | **817750** |
| XS1134 | **817753** |
| XS1146 | **817754** |
| XS1163 | **817749** |

| CODE TECH. | Valeo |
|---|---|

*Every effort has been made to ensure that the information contained in this catalogue is correct at the time of printing, but no warranty or representation is given or made as to the accuracy of such information and Valeo Service UK Ltd does not accept any liability whatsoever for any inaccuracies.*

*Valeo Service UK Ltd reserves the right to alter specifications and/or the final construction of products without notice.*

*Product references referred to in this catalogue may not be available in all countries.*

*All orders for products are only accepted subject to the terms and conditions of Valeo Service UK Ltd.*

*Photographs and drawings are not binding on Valeo Service UK Ltd. The copyright in this publication belongs to Valeo Service UK Ltd exclusively. No part of this publication may be reproduced by any means without the prior authorisation of Valeo Service UK Ltd.*

L'affectation et la préconisation des produits figurant dans nos catalogues prennent en compte l'état du parc automobile au jour de leur parution.

La responsabilité de Valeo Service ne saurait être engagée en cas de modification, substitution ou suppression des affectations ou préconisations qui pourraient intervenir notamment à l'initiative des constructeurs de véhicules.

Les caractéristiques techniques de nos produits sont susceptibles d'évoluer à tout moment pour tenir compte des améliorations techniques et technologiques.

Certaines références peuvent ne pas être disponibles dans tous les pays.

Les commandes sont régies par les conditions générales de vente de Valeo Service.

Photos et dessins non contractuels. La reproduction de tout ou partie de cette publication est interdite sans l'autorisation expresse et écrite de Valeo Service.

*La aplicación de los productos sobre vehículos y las especificaciones de los productos que figuran en nuestros catálogos se refieren a la situación del parque de automóviles en la fecha de puesta en circulación de los productos.*

*Valeo Service España SA no asume ninguna responsabilidad en caso de modificación, sustitución o supresión de dichas aplicaciones y/o especificaciones que pudieran producirse por iniciativa de los fabricantes de automóviles.*

*Las características técnicas de nuestros productos son susceptibles de evolucionar en cualquier momento para incorporar las mejoras técnicas y tecnológicas que se desarrollen.*

*Las referencias de productos mencionadas en este catalogo puede que no estén disponibles en todos los países.*

*Los pedidos se regiran por las conditiones generales de venta de Valeo Service España SA.*

*Las fotografías y dibujos que aparecen en nuestros catálogos son meramente indicativas, por lo que no siempre coinciden exactamente con la apariencia externa de nuestros productos. Se prohíbe la reproducción de todo o parte de esta publicación sin la autorización expresa y escrita de Valeo Service España SA.*

As prescrições e recomendações relativas ao uso ou utilidade dos produtos constantes de nossos catálogos levam em consideração o estado do parque automotivo à época do lançamento desses produtos.

A Valeo Sistemas Automotivos Ltda (Valeo Cibié Service) não será responsável por quaisquer modificações, substituições ou supressões incidentes sobre as prescrições e recomendações relativas ao uso ou utilidade de nossos produtos, que sejam decorrentes de ações dos construtores de veículos.

As características técnicas de nossos produtos são suscetíveis de alteração a qualquer momento para que sejam incorporadas melhorias técnicas e/ou tecnológicas.

Certas referências podem não estar disponíveis em todos os países.

Os pedidos feitos pelos clientes são regidos pelas condições gerais de venda da Valeo Sistemas Automotivos Ltda (Valeo Cibié Service).

Fotos e desenhos não contratuais. A reprodução do todo ou de parte desta publicação é proibida sem a autorização expressa e por escrito da Valeo Sistemas Automotivos Ltda (Valeo Cibié Service).

*Le applicazioni e le specifiche dei prodotti che figurano nei nostri cataloghi si riferiscono alla situazione del parco circolante al momento della pubblicazione.*

*Valeo Service Italia S.p.A. declina qualsiasi responsabilità in caso di modifica, sostituzione o soppressione di applicazioni o specifiche eventualmente apportate, senza preavviso, da parte dei Costruttori .*

*Le caratteristiche tecniche dei nostri prodotti sono suscettibili di modifiche in qualsiasi momento, per apportare migliorie tecniche e tecnologiche.*

*Alcuni riferimenti presenti in questo catalogo non sono disponibili in tutti i paesi.*

*Gli ordini sono regolamentati dalle condizioni generali di vendita di Valeo Service Italia S.p.A..*

*Le Foto ed i disegni che appaiono nel catalogo sono puramente indicativi. E' vietata la riproduzione della totalità o di una parte della presente pubblicazione senza un'esplicita autorizzazione scritta da parte di Valeo Service Italia S.p.A..*

*De ter zake van de producten in onze catalogi aangegeven bestemmingen en gedane aanbevelingen zijn gebaseerd op het wagenpark ten tijde van publicatie.*

*Valeo Service Benelux B.V. sluit elke aansprakelijkheid uit met betrekking tot wijziging, vervanging of annulering van de bestemmingen of aanbevelingen, die met name op initiatief van de autofabrikanten kunnen worden doorgevoerd.*

*De technische eigenschappen van onze producten kunnen te allen tijde evolueren teneinde rekening te houden met technische en technologische verbeteringen.*

*Bepaalde artikelen kunnen in bepaalde landen niet beschikbaar zijn.*

*Orders zijn onderworpen aan de algemene verkoopvoorwaarden van Valeo Service Benelux B.V.*

*Foto's en tekeningen zijn niet bindend.*

*De gehele of gedeeltelijke verveelvoudiging van deze uitgave zonder uitdrukkelijke voorafgaande schriftelijke toestemming van Valeo Service Benelux B.V. is verboden.*

Die Verwendungsempfehlungen zu den in diesem Katalog aufgeführten Produkten beziehen sich auf den zum Zeitpunkt des Erscheinens dieses Katalogs existierenden Fahrzeugbestand.

Valeo Service Deutschland GmbH übernimmt keine Haftung für Änderungen, Ersetzungen oder Streichungen der Fahrzeuganwendung oder -Empfehlungen, die besonders auf Initiative der Fahrzeughersteller auftreten können.

Die technischen Eigenschaften unserer Produkte unterliegen ständiger Entwicklung, um technischen und technologischen Verbesserungen Rechnung zu tragen.

Die Fotos oder Zeichnungen in diesem Katalog dienen ausschliesslich der Veranschaulichung unserer Produkte. Rechtliche Ansprüche können daraus nicht abgeleitet werden.

Einige Produktreferenzen sind nicht in allen Ländern verfügbar.

Lieferungen unterliegen den Allgemeinen Verkaufsbedingungen von Valeo Service Deutschland GmbH.

Die Vervielfältigung dieses Katalogs oder Teilen davon ohne die schriftliche Erlaubnis von Valeo Service Deutschland GmbH ist nicht zulässig.

Przeznaczenie i zalecenia dotyczące produktów figurujących w naszych katalogach biorą pod uwagę stan parku samochodowego w dniu ich wprowadzenia na rynek.

Spółka "Valeo Service Eastern Europe Sp.zo.o." nie może być ponosić odpowiedzialności w przypadku zmiany, zastąpienia lub usunięcia wskazówek dotyczących przeznaczenia i zaleceń, które mogą wystąpić z inicjatywy producentów samochodów.

Dane techniczne naszych produktów mogą być w każdej chwili zmienione w celu uwzględnienia ulepszeń technicznych i technologicznych.

Niektóre modele mogą być niedostępne w niektórych krajach.

Zamówienia podlegają ogólnym warunkom umów "Valeo Service Eastern Europe Sp.zo.o.".

Wykorzystywanie w całości lub w części zdjęć i rysunków zamieszczonych w naszych katalogach wymaga pisemnej zgody "Valeo Service Eastern Europe Sp.zo.o.".

Učinili jsme všechny kroky nezbytné k tomu, aby informace v tomto dokumentu byly přesné ke dni jeho tisku. Valeo Service Export nezodpovídá za případné neúplné či chybné informace zde uvedené.

Valeo Service Export si vyhrazuje právo úpravy specifikace a / nebo konečné formy výrobku bez předchozího upozornění.

Katalogová čísla obsažená v tomto katalogu nemusí být dostupná k prodeji na všech trzích. Konečné objednání výrobků se řídí obchodními podmínkami Valeo Service Export.

Fotografie a technické nákresy nezávisí na Valeo Service Export. Copyright je exkluzivně Valeo Service Export. Žádná část tohoto katalogu nesmí být kopírována bez autorizace Valeo Service Export.

A VALEO teljes tudásával arra törekszik, hogy a katalógusban szereplő adatok műszaki tartalma teljesen korrekt legyen, ezért a VALEO SERVICE EXPORT nem vállal garanciát azok helyességéért, pontatlanságáért és nem terheli felelősség az esetleges hibákból eredő károkért.

A VALEO SERVICE EXPORT fenntartja a jogot a termékváltoztatásokra mellékelt termékinformáció nélkül.

A katalógusban szereplő cikkszámok között előfordulhatnak olyanok is, melyek nem minden országban kerülnek forgalomba.

Minden termék rendelés a VALEO SERVICE EXPORT szerződés kondíciói alapján érvényes.

A katalógusban szereplő fényképek és rajzok nem a VALEO SERVICE EXPORT készítményei. A szerzői jogok a VALEO SERVICE EXPORT kizárólagos tulajdonát képezik.

A kiadvány részét nem képező reprodukciókhoz nem szükséges a VALEO SERVICE EXPORT engedélye.

Назначение и рекомендации по эксплуатации продукции, содержащиеся в наших каталогах, указываются с учетом состояния автомобильного парка на день ее появления.

Компания «Valeo Service Eastern Europe Sp.zo.o» не несет ответственности в случае внесения изменений в рекомендации по эксплуатации продукции или их устранения, произошедших, в частности, по инициативе производителей автомобилей.

Технические характеристики нашей продукции могут претерпевать изменения в любой момент, с учетом усовершенствования технических и технологических процессов.

Некоторые виды продукции могут не иметься в наличии в отдельных странах.

Заказы осуществляются согласно общим правилам торговли, применяемым в компании «Valeo Service Eastern Europe Sp.zo.o».

Фотографии и изображения продукции могут не в полной мере соответствовать оригиналам. Воспроизведение всей или части настоящей публикации запрещено без специального письменного согласия компании «Valeo Service Eastern Europe Sp.zo.o».

Kataloglarımızda yer alan ürünlerin kullanım ve tanımları, otomobil parkının yayın tarihindeki durumuna göredir.

Valeo Otomotiv Dağitim AS, özellikle araç, üreticilerinin inisiyatifi sonucu yapılan değişiklik, ikame veya kaldırmalardan sorumlu tutulamaz.

Ürünlerimizin teknik özellikleri, teknik ve teknolojik gelişmelere paralel olarak geliştirilebilir.

Bazı referanslar bazı ülkelerde bulunmayabilir.

Siparişler, Valeo Otomotiv Dağitim AS'un genel satiş koşullarına uygun olarak ödenir.

Fotoğraf ve resimler akdi değildir. Işbu yayının Valeo Otomotiv Dağitim AS'un önceden verilmiş yazılı izni olmaksızın kısmen veya tamamen çoğaltılması yasaktır.

Ο κατάλογος έχει συσταθεί λαμβάνοντας υπόψη τη σύσταση του στόλου αυτοκινήτων την ημέρα, της κυκλοφορίας του.

Η Valeo δε φέρει ευθύνη σε περίπτωση τροποποίησης, αλλαγής ή αντικατάστασης κάποιου αντ/κου που περιέχεται στο κατάλογο, εξαιτίας πρωτοβουλίας του κατασκευαστή του οχήματος.

Τα τεχνικά χαρακτηριστικά των προϊόντων ενδέχεται να διαφοροποιηθούν ανά πάσα στιγμή λόγο τεχνολογικών εξελίξεων.

Μερικοί κωδικοί αντ/κων μπορεί να μην είναι διαθέσιμοι σε κάποιες χώρες.

Οι παραγγελίες υπόκεινται στους γενικούς όρους πωλήσεων της Valeo.

Οι φωτογραφίες και τα σχέδια δεν είναι δεσμευτικά. Η αναπαραγωγή ολόκληρου ή τμήματος αυτού του καταλόγου απαγορεύεται να γίνει χωρίς τη ρητή και γραπτή άδεια της Valeo Service.

# Valeo, a One Stop thermal components supplier

*Le fournisseur incontournable de produits thermiques*

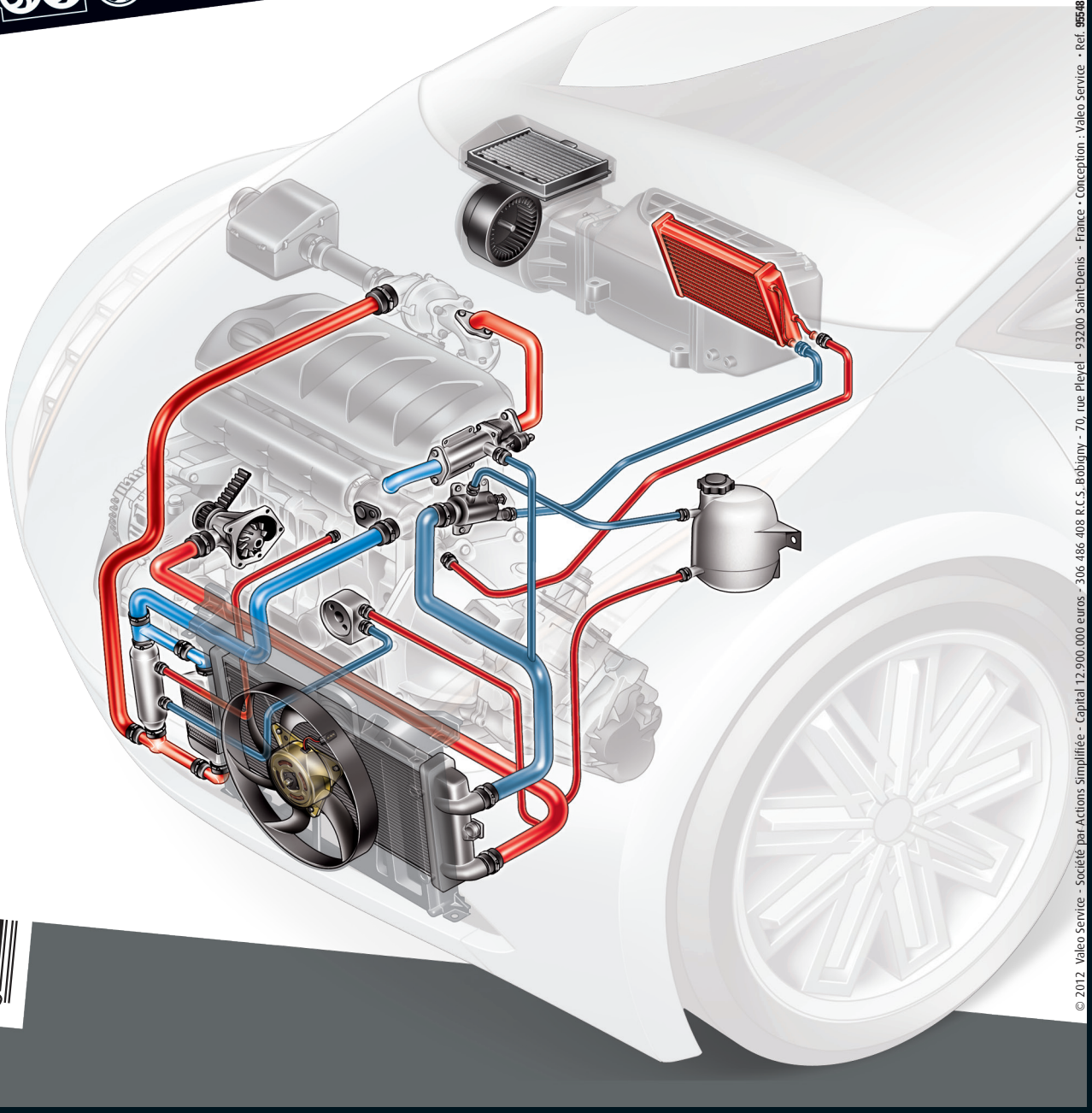

TecDoc

3 276429 554869

valeo added™

© 2012 Valeo Service - Société par Actions Simplifiée - Capital 12.900.000 euros - 306 486 408 R.C.S. Bobigny - 70, rue Pleyel - 93200 Saint-Denis - France • Conception : Valeo Service • Ref. 955486 • Price : 6 euros

Valeo

Automotive technology, naturally