TBD LED SOLUTIONS

LED Strip Series ... P.2
Profile Channel Series ... P.8
LED Closet Light Series ... P.14
LED Undercabinet Series ... P.16
LED Puck Light Series ... P.18
LED Well Light Series ... P.20
LED Festoon Track System ... P.22
LED Festoon Lamps ... P.23

LED Strip Series

The LED Strip Series is an innovative energy-efficient linear lighting system. Great for many indoor / outdoor, commercial / residential applications: accent lighting, shelves, under cabinet, floating vanity mirrors, step, display, slots, wall graze, or tight spaces. All with several LED color temperature options, 90+ CRI, fully dimmable, long life, and 50,000 hours. The full line ranges from 1.5 Watts per foot to 8.8 Watts per foot. When used with a deep channel and frosted lens, virtually all hot spots are eliminated. Highlighted are our most popluar and best selling LED Strips.

Standard Output Strips

TBD.S36

3.0W LED STRIP INDOOR / OUTDOOR

Superior option for smaller-detail accent lighting: shelves, under cabinet, floating vanities, step, display, or tight spaces.

Indoor Rated

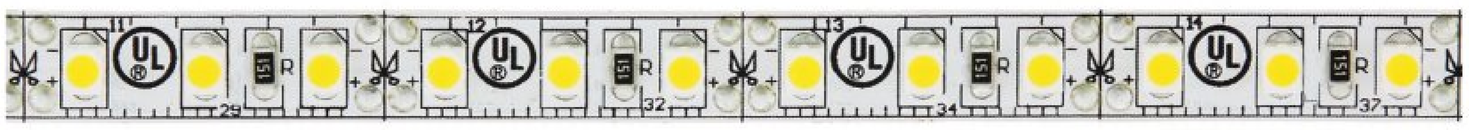

Outdoor Rated

COLOR OPTIONS

2200K; 2500K; 2700K; 3000K; 3500K; 4000K; 5000K; 6000K; Red; Blue; Green; Pink; Purple; Amber; Orange

Specifications

- 3 Watts per ft.
- 36 LEDs per ft.
- 90+ CRI
- 240 Lumens per ft., 3000K
- 120° Beam Spread
- Max Run 16.4 ft. (12V) / 24 ft. (24V)
- Field cuttable every 1" (12V) / 2" (24V)
- 3M Adhesive Backing (Indoor Only)
- Indoor Rated Width 0.4" Depth 0.08"
- Optional IP65 Rated Width 0.41" Depth 0.15"
- IP65 option includes 5X End Caps, 10X Mounting Clips per 16 ft.
- 12V DC and 24V DC

Photo: LED Strip and Profile Channel for Cove Lighting

Standard Features

Fully Dimmable with TBD.PSDM and TBD.PSDH Dimmable Drivers

Long Life: 50,000 hours

Application Friendly: UV Free & IR Free Will not degrade fabrics or artwork

Environmentally Friendly: Mercury Free & Lead Free

90+ CRI

High Output Strips

TBD.S81

5.5W LED STRIP INDOOR

High Output option for wall washes and vanities.

COLOR OPTIONS

22000K, 2700K; 3000K; 35000K 4000K; 5000K

Specifications

- 5.5 Watts per ft.
- 81 LEDs per ft.
- 90+ CRI
- 500 Lumens per ft., 3000K
- 120° Beam Spread
- Max Run 8 ft.
- Field cuttable every 1"
- 3M Adhesive Backing
- Width 0.04" Depth 0.045"
- 24V DC

High Intensity Strips

TBD.DSH72

6.6W HIGH POWER INDOOR LED STRIP

Super High Output option, with more than 750 lumens at 6.6 Watts per foot, for general lighting: coves, wall slots or vanity mirrors.

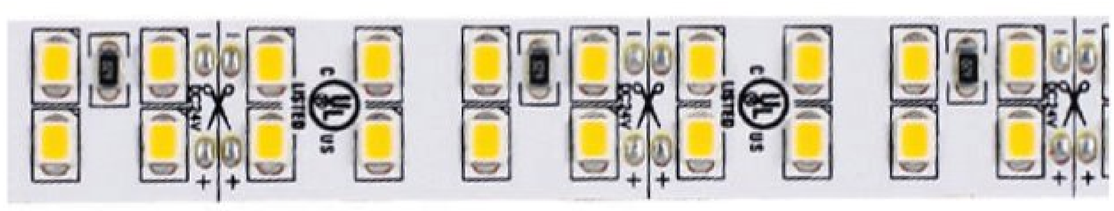

COLOR OPTIONS

2700K; 3000K; 3500K; 4000K; 5000K

Specifications

- 6.6 Watts per ft.
- 72 LEDs per ft.
- 90+ CRI
- 698 Lumens per ft., 3000K
- 160° Beam Spread
- Max Run 20 ft.
- Field cuttable every 1.3"
- 3M Adhesive Backing
- Indoor Rated Width 0.55" Depth 0.08"
- 24V DC

Photo: LED Strip and Profile Channel for Cove Lighting; LED Strip for Custom Chandelier

LED Strip Series (continued)

High Intensity Strips (continued)

TBD.TS96

7.9W HIGH POWER INDOOR LED STRIP

Triple width LED configuration creates a Super High Output strip, with over 900 lumens at 7.9 Watts per foot. A superior option for areas that can accommodate a super wide channel: coves, cabinets, ceiling slots, vanity mirrors.

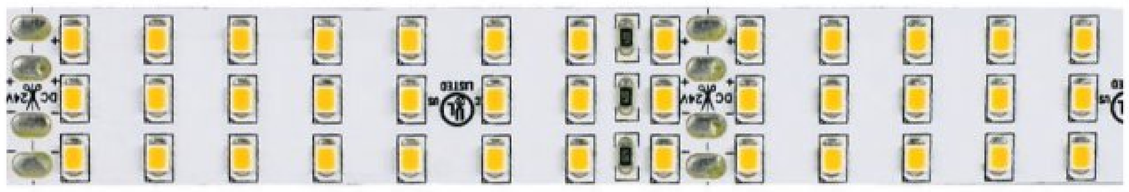

COLOR OPTIONS

2700K; 3000K; 3500K; 4000K; 5000K

Specifications

- 7.9 Watts per ft.
- 96 LEDs per ft.
- 90+ CRI
- 930 Lumens per ft., 3000K
- 120° Beam Spread
- Max Run 20 ft.
- Field cuttable every 3.2"
- 3M Adhesive Backing
- Indoor Rated Width 0.87" Depth 0.08"
- 24V DC

Photo: LED Strip and Profile Channel for Lighted Stairway

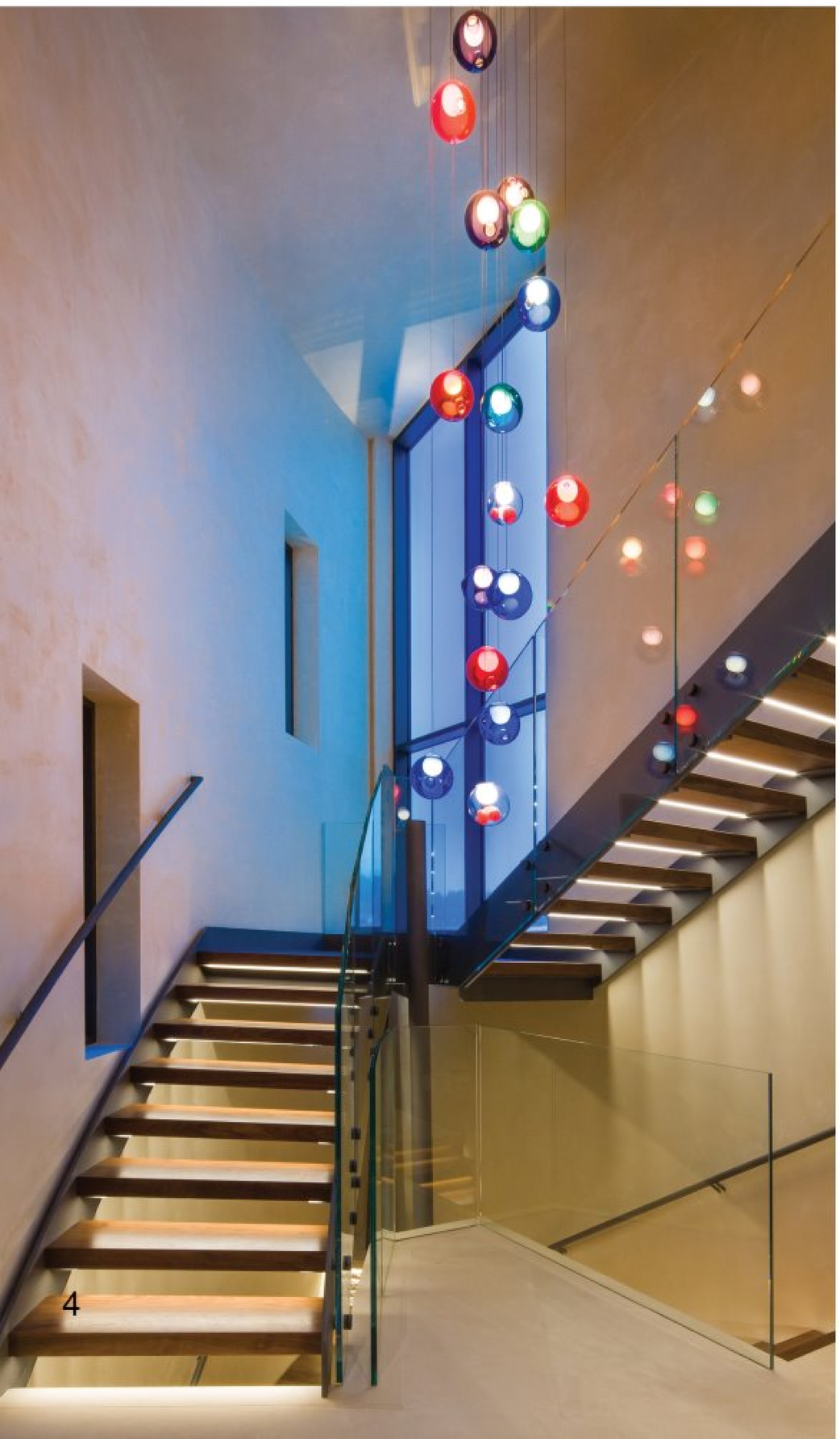

Color Changing LED Strips

Optimal for areas where high intensity dynamic results are required, with red, green, blue, and white LEDs combined for exciting color changing effects; or combined color temperatures for a cool to warm dimming effect, from bright full daylight, to the warm tones of sunrise and sunset. Different moods created with the touch of a button! DMX decoder and wall controller available.

TBD.DSC72-CCT

6.0W MULTI COMBINED COLOR TEMPERATURE LED STRIP

Combined color temperatures in one LED strip ranging from 6000K to 2200K creates a cool to warm dimming effect. Great for hospitality applications for different lunchtime and dinner moods, residential, or wherever bright daylight dimming to the warm tones of sunrise and sunset are desired.

COLOR OPTIONS

Row A: 2200K; 2700K; 3000K Row B: 4000K; 5000K; 6000K

Specifications

- 6 Watts per ft.
- 72 LEDs per ft.
- 90+ CRI
- 400-500 Lumens per ft.
- 120° Beam Spread
- Max Run 16 ft.
- Field cuttable every 1"
- 3M Adhesive Backing (Indoor Only)
- Indoor Rated Width 0.55" Depth 0.08"
- Optional IP65 Rated Width 0.67" Depth 0.18"
- 24V DC

TBD.SC18

4.4W LED INDOOR / OUTDOOR RGBW STRIP

Value option for red, green, blue and white LED's combined for dynamic color changing effects for coves, slots, or displays.

COLOR OPTIONS

RGB/3000K; RGB/5000K

Specifications

- 4.4 Watts per ft.
- 18 LEDs per ft.
- 90+ CRI
- 165 Lumens per ft., 3000K
- 120° Beam Spread
- Max Run 25 ft.
- Field cuttable every 8"
- 3M Adhesive Backing (Indoor Only)
- Width 0.55" Depth 0.10"
- Optional IP65 Rated Width 0.67" Depth 0.25"
- 16 million color options
- 24V DC

TBD.DSC72

8.8W LED INDOOR / OUTDOOR RGBW STRIP

Superior option for red, green, blue and white LED's combined for high intensity color changing effects for coves, slots, or displays.

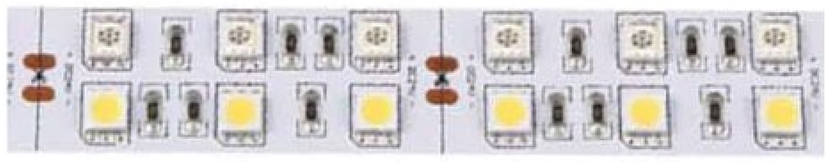

COLOR OPTIONS

RGB/3000K; RGB/5000K

Specifications

- 8.8 Watts per ft.
- 4.4 W RGB / 4.4W White LED
- 90+ CRI
- 36 LEDs per ft.
- Lumens: RGB 330 / White 330
- 120° Beam Spread
- Max Run 20 ft.
- Field cuttable every 4"
- 3M Adhesive Backing (Indoor Only)
- Width 0.78" Depth 0.15"
- Optional IP65 Rated Width 0.78" Depth 0.15"
- 16 million color options
- 24V DC

Photo: RGBW LED Strip And Profile Channel for Color Changing Cabanas

Standard Features

Fully Dimmable with TBD DMX-4C Interface

Long Life: 50,000 hours

Application Friendly: UV Free & IR Free Will not degrade fabrics or artwork

Environmentally Friendly: Mercury Free & Lead Free

90+ CRI

c UL us LISTED

LED Strip Series (continued)

Flex Series

High performance flexible LED fixture designed to bend around awkward contours or tight radiuses in applications requiring a smooth surface or continuous line of light.

TBD.NU-IP65

4.4W INDOOR / OUTDOOR LED STRIP

Fully encapsulated UV protected IP65 damp location rated.

TBD.NU-IP68

4.4W WET LOCATION / SUBMERSIBLE LED STRIP

Fully encapsulated UV protected IP68 wet location / submersible rated.

COLOR OPTIONS

2400K; 2700K; 3000K; 3500K; 4000K; 5000K; RBG; Red; Pink; Green; Blue; Amber; Yellow

Specifications

- 4.4 Watts per ft.
- 90+ CRI
- 120° Beam Spread
- Max Run 32 ft.
- Operating Temp: -4°F ~ 122°F
- 24V DC
- Bend Radius 2.6"
- Bottom Feed, Side Feed, or End Feed

Photo: LED Flex Strip for Backlit Freeform Window Wall; RGBW LED Strip and Profile Channel for Floating Wall Detail Top and Bottom

Standard Features

Fully Dimmable with TBD.PSDM and TBD.PSDH Dimmable Drivers

Long Life: 50,000 hours

Application Friendly: UV Free & IR Free Will not degrade fabrics or artwork

Environmentally Friendly: Mercury Free & Lead Free

90+ CRI

Photo: LED Side Emitting Strip for Edge Lit Shelf Detail; LED Strip and Profile Channel for Backlit Glass Barface

Side Emitting

TBD.SS36

3W SIDE EMITTING LED INDOOR / OUTDOOR STRIP - STANDARD OUTPUT

Indoor option suitable for curved surfaces, when an upward or downward light source is desired.

COLOR OPTIONS

2600K; 3000K; 4000K; 5000K; 6000K

Specifications

- 3 Watts per ft.
- 36 LEDs per ft.
- 90+ CRI
- 240 Lumens per ft., 3000K
- 120° Beam Spread
- Max Run 16.4 ft. (12V) / 12.4 ft. (24V)
- Field cuttable every 2"
- 3M Adhesive Backing (Indoor Only)
- Indoor Rated Width 0.32" Depth 0.08"
- Optional IP65 Rated Width 0.44" Depth 0.18"
- IP65 option includes 5X End Caps, 10X Mounting Clips per 16 ft.
- 12V DC and 24V DC

Profile Channel Series

These durable Anodized Aluminum Profile Channels not only add a great finished appearance to your space, but also protect LED chips from dust, and provide superior thermal management for higher wattage LED strips, prolonging the overall lifetime of the lighting system. Patented diffusers maximize lumen output and beam distribution.

TBD.E45 / TBD.L45

A 45 degree angle surface mount channel suitable for shelves, undercabinets, and corners. Now also available in black.

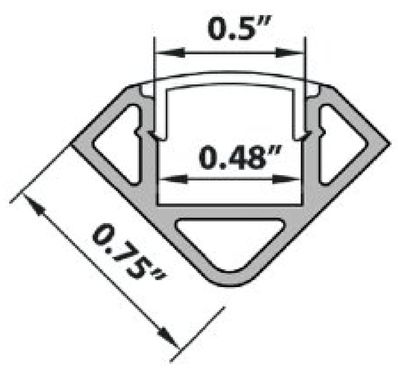

Surface Mount

COMPATIBLE LED STRIPS

- TBD.SL18
- TBD.SH18
- TBD.S36
- TBD.SH36
- TBD.SS36
- TBD.S36W
- TBD.S81

TBD.E45W

A wider version of the 45 degree angle surface mount channel, suitable for shelves, undercabinets and corners.

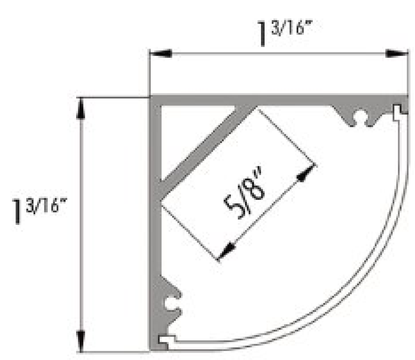

Surface Mount

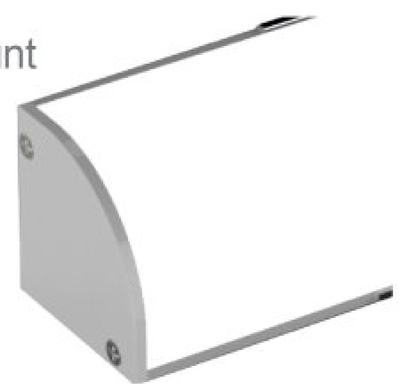

COMPATIBLE LED STRIPS

- TBD.SL18
- TBD.SH18
- TBD.S36
- TBD.SH36
- TBD.SC18 (Dry Only)
- TBD.DS72
- TBD.SL18W
- TBD.S36W
- TBD.DS72W
- TBD.DS72-CCT (Dry Only)
- TBD.S81

Photo: LED Strip and Profile Channel for Floating Fireplace and Kitchen Island Detail

Photo: LED Strip and Profile Channel for Slot Detail / Wall Graze Lighting; Recessed LED Well Light for Uplighting Walls

TBD.E7 / TBD.L7

A shallow channel available in surface or recessed mount.

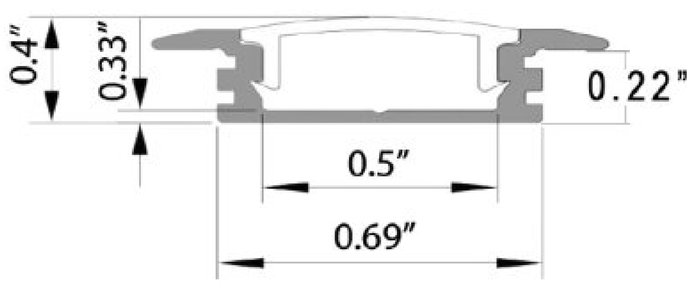

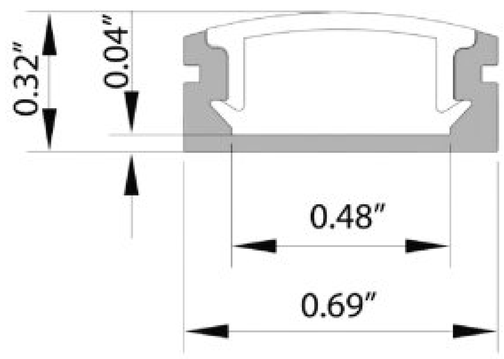

Recessed Mount

Surface Mount

COMPATIBLE LED STRIPS

- TBD.SL18
- TBD.SH18
- TBD.S36
- TBD.SH36
- TBD.SC18
- TBD.S81

TBD.E6

A channel suitable for super tight spaces.

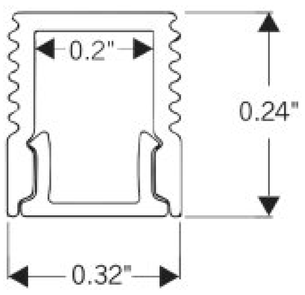

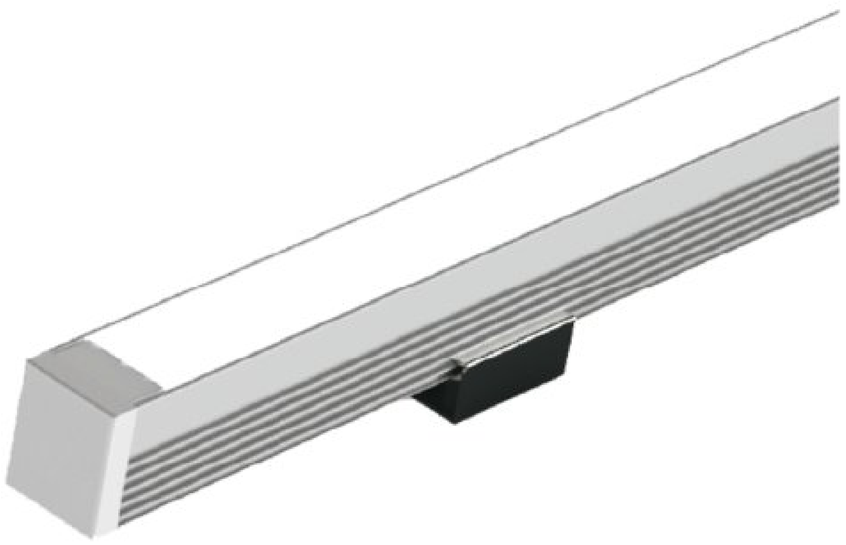

TLS

Standard Features

Anodized Aluminum Channel

Includes Mounting Clips, End Caps

c UL us LISTED

Profile Channel Series (continued)

TBD.E35S

Surface Mounted or Suspended, 160° Beam Spread. Optional Mud-In Mesh Bracket available.

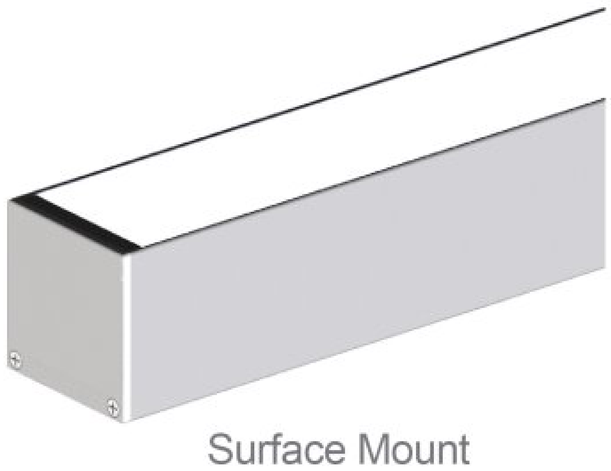

Surface Mount

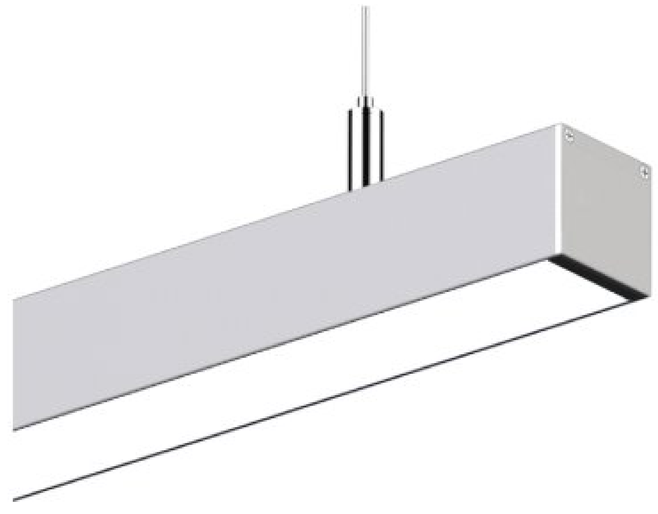

Suspended Mount

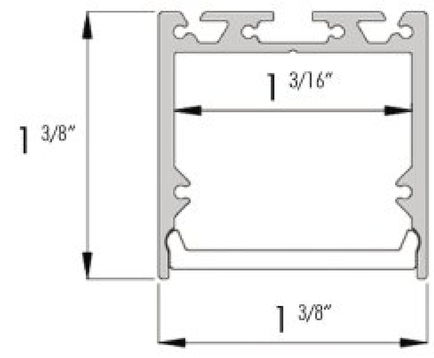

COMPATIBLE LED STRIPS

- TBD.SL18
- TBD.SH18
- TBD.S36
- TBD.SH36
- TBD.SC18
- TBD.DS72
- TBD.DS36
- TBD.DS72
- TBD.DS72-CCT
- TBD.S81

TBD.ERC

Specially shaped to direct beam either up or down onto ceilings or floors, projecting a warm glow for cove or pathway lighting.

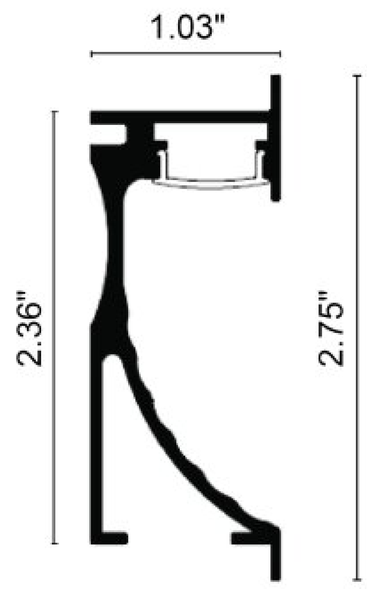

COMPATIBLE LED STRIPS

- TBD.SL18
- TBD.SH18
- TBD.S36
- TBD.SH36
- TBD.SC18 (Dry Only)
- TBD.DS72 (Dry Only)
- TBD.SL18W
- TBD.S36W
- TBD.DSC72-CCT (Dry Only)
- TBD.S81

Photo: LED Strip and Profile Channels Custom-Cut for Wine Rack Lighting

Photo: LED Strip and Directed Beam Profile Channel for Cove Lighting

TBD.E65

Available in 10 degree, 30 degree, or 60 degree optic options, for specialty purposes like grazing tall walls.

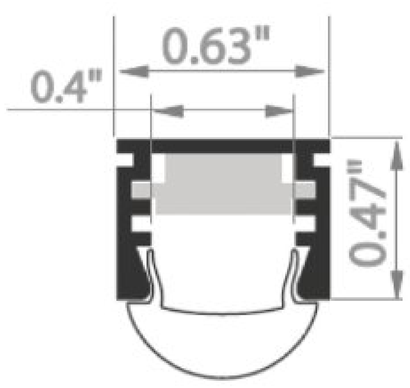

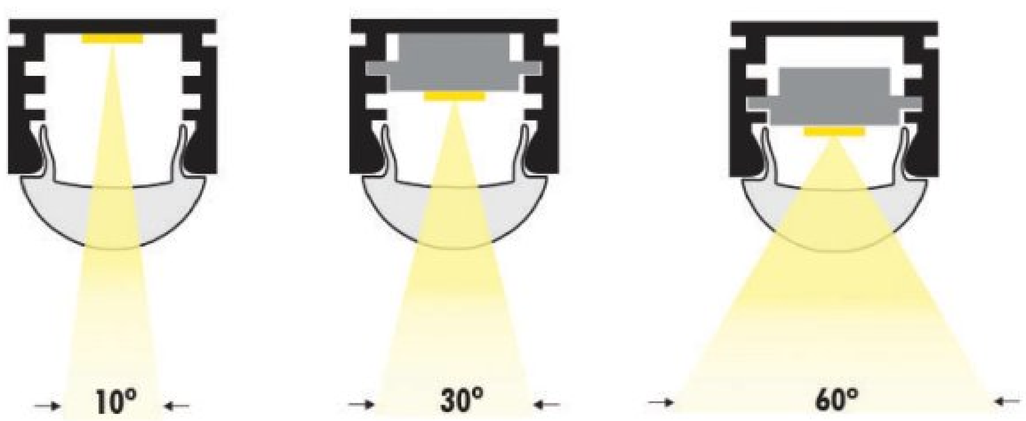

COMPATIBLE LED STRIPS

- TBD.SL18 (Dry Only)
- TBD.SH18
- TBD.S36 (Dry Only)
- TBD.SH36
- TBD.S81

Standard Features

Anodized Aluminum Channel

Includes Mounting Clips, End Caps

c UL us LISTED

Profile Channel Series (continued)

TBD.E26

Durable, designed for pavement, sidewalk, and driveway applications. Included polycarbonate frosted diffuser is certified for all weather conditions, UV resistant, and can withstand a maximum load of 5000 lbs.

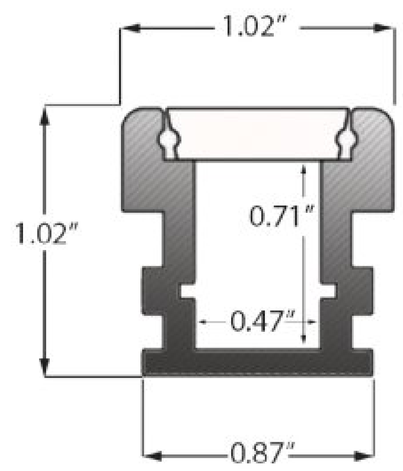

Recessed Mount

COMPATIBLE LED STRIPS

- TBD.SL18
- TBD.SH18
- TBD.S36
- TBD.SH36
- TBD.SC18
- TBD.S81

Photo: Wet Location LED Strip and Profile Channel for Outdoor Steps

Standard Features

Anodized Aluminum Channel

Includes Mounting Clips, End Caps

Photo: Side-Emitting LED Strip for Arched Wall Wash of Courtyard

TBD.FDI

An LED luminaire available in stock sizes for surface or suspended mounting. Provides both direct and indirect light distribution. Silver, black and white finishes.

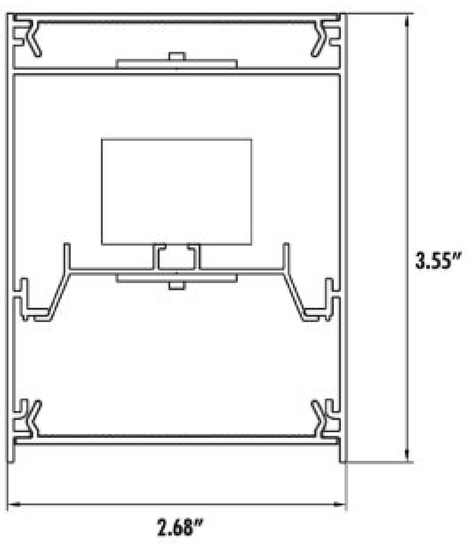

Offered in three lumen output options up to 1110 Lumens per ft.
Available in 4 ft., 8 ft., and 12 ft. lengths.

LED Closet Light Series

TBD.CL - LED CLOSET STORAGE LIGHT

The LED Closet Light Series is designed for use in residential and commercial closets and closet storage areas. This new low profile silhouette is available in multiple lengths to fit any installation requirement. At 5 watts per foot, 320 lumens per foot and 90+ CRI, this is our brightest and most efficient LED Closet Light Series available to date. The fixtures can be linked seamlessly up to 20 feet in one run, and a diffused lens system eliminates hot spots. Fully dimmable, adjustable mounting, optional snap-on inline motion sensor. ETL and UL Listed.

Standard Features

Fully Dimmable with TBD.PSDM Dimmable Drivers

Optional Snap-on Inline Motion Sensor

Long Life: 50,000 hours

Application Friendly: UV Free & IR Free Will not degrade fabrics or artwork

Environmentally Friendly: Mercury Free & Lead Free

ETL and UL Listed for Closet and Storage Areas

90+ CRI

Certification

Identified for use in the storage area of a closet per NEC Article 410.16(A)(3) and 410.16(C)(5). Fixture is ETL listed for dry location for closet use with clothing and complies with UL Standard 2108

Photo: LED Closet Lights for Hanging Clothes Closet Lighting

OUTPUT FEATURES

CAT NO.	LENGTH	WATTS	LUMENS	# OF LED
TBD.CL-6	6"	2.5	160	24
TBD.CL-12	12"	5	320	48
TBD.CL-24	24"	10	640	96
TBD.CL-36	36"	15	960	144
TBD.CL-48	48"	20	1280	192

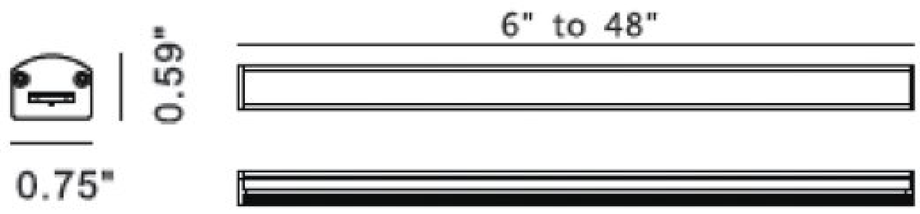

Available in lenths: 6", 12", 24", 36", 48"

Specifications

- 5 Watts per ft.
- 320 Lumens per ft.
- 90+ CRI
- Linkable up to 20 ft.
- ETL and UL Listed and approved for closet and closet storage areas
- Seamless Connection
- Lensing system eliminates hot spots
- Long Life: 50,000 Hours
- Eco-friendly, No IR, No UV, will not degrade fabrics or artwork
- 24V DC
- Fully Dimmable (w/TBD.PSDM LED dimmable drivers)
- Versatile mounting clips allow for angled installation option
- Snap-on inline motion sensor for easy installation (optional)

Certification

Identified for use in the storage area of a closet per NEC Article 410.16(A)(3) and 410.16(C)(5). Fixture is ETL listed for dry location for closet use with clothing and complies with UL Standard 2108

Accessories

Link Ext Cable
- 2" - TBD.CL-LNK-2
- 6" - TBD.CL-LNK-6
- 24" - TBD.CL-LNK-24

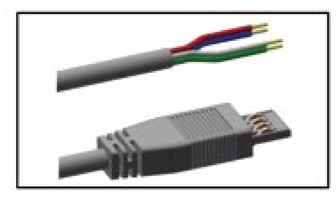

Hardwire Cable
- 12" - TBD.CL-HWC-12
- 72" - TBD.CL-HWC-72

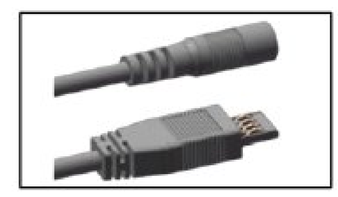

DC Power Connector
- 12" - TBD.CL-PDC-12

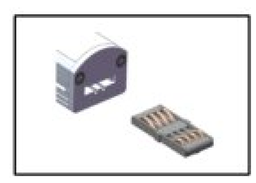

Mini Coupling (included)
- TBD.CL-SMC

Flat Bracket (included)
- TBD.CL-BKT

45° Bracket (2 PCS)
- TBD.CL-BKT45

Adjustable Bracket
- TBD.CL-BKT-ADJ

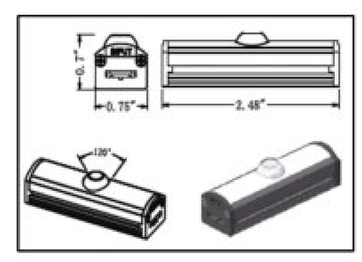

Inline Motion Sensor
- TBD.MS

Door Jam Switches
Flush Mount
- TBD.SWITCH200

Surface Mount
- TBD.SWITCH210

Photo: LED Closet Lights for Hanging Clothes Closet Lighting

LED Undercabinet Series

TBD.UCS - LED SLIMLINE UNDERCABINET

These slimline undercabinet fixtures are the perfect solution for cabinet, backsplash, and countertop lighting applications. Bright and efficient, the intuitive low profile design adds functionality through the elimination of shadows and dark corners. Frosted, diffused lenses eliminate hot spots. Up to 300W can be linked together for a seamless light source. Creates a warm ambient glow with dimmable feature. 120V, no transformer required. Pre-sized and linkable, great for use in shelving, display and accent lighting, too.

- **Dimensions:**

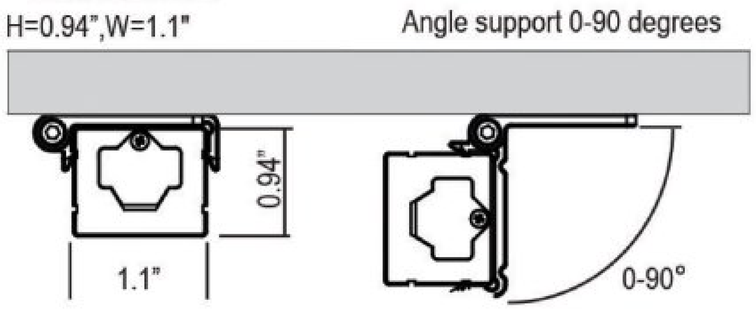

Specifications

- 7 Watts per ft.
- up to 490 Lumens per Ft.
- 90+CRI
- White and Bronze Finishes
- 120V No Transformer Required
- Width 1.1" Height 0.94"
- Seamless Connection
- Linkable up to 300W
- Frosted Lens
- TRIAC Dimming (with standard dimmer)
- UL Listed
- 0º to 90º mounting brackets included
- Complies with Energy Star Certifications
- 5 Year Warranty

Photo: LED Slimline Undercabinet Lights for Undercabinet and Counter Top Lighting; LED Strip and Profile Channel for Cabinetry

Standard Features

Seamless Connection

Frosted Lens

90+ CRI

Rated Life: 50,000 Hours

UL Listed

Title 24 and Energy Star Certified

c UL us LISTED

Photo: LED Slimline Undercabinet Lights for Cabinetry Lighting

OUTPUT FEATURES

CAT NO.	LENGTH	WATTS	LUMENS	# OF LED
TBD.UCS-12	12"	7	490	42
TBD.UCS-18	18"	10	685	60
TBD.UCS-24	24"	13.5	875	90
TBD.UCS-32	32"	17	1075	102

Photo: LED Slimline Undercabinet Lights for Shelf Lighting

Accessories

Junction Box
Direct wire junction box with switch
- White - TBD.JB-WH
- Bronze - TBD.JB-BZ

Junction Sensor Box
Direct wire Occupancy Sensor box with switch
- White - TBD.OSC-JB-WH
- Bronze - TBD.OSC-JB-BZ

Hardwire Connector
Hardwire connector for TBD.UCS Series
- 72" White - TBD.HWC-72-WH
- 72" Black - TBD.HWC-72-BK

Power Feed Cable
AC direct plug-in applications
- 72" White - TBD.PCA-72-WH
- 72" Black - TBD.PCA-72-BK

Interlink Cable
Allows TBD.UCS fixtures to link together
- 6" White - TBD.LNK-6-WH
- 6" Black - TBD.LNK-6-BK
- 12" White - TBD.LNK-12-WH
- 12" Black - TBD.LNK-12-BK
- 24" White - TBD.LNK-24-WH
- 24" Black - TBD.LNK-24-BK
- 72" White - TBD.LNK-72-WH
- 72" Black - TBD.LNK-72-BK

Mini Coupling
Create a seemless connection between two TBD.UCS fixtures.
*1 pc included with each TBD.UCS fixture
- White - TBD.SMC-WH
- Black - TBD.SMC-BK

LED Puck Light Series

Dimmable, eco-friendly, pucks lights are great solutions for cabinet, shelf, counter, step and display applications. Perfect replacements for hot, halogen lighting!

TBD.P - 3W LED PUCK

Suitable for recessed or surface mount applications, has a 1/2" profile.

Specifications

- 3 Watt High Output LED
- 240 Lumens
- 85+ CRI
- 50,000 Hours
- Diffused Frosted Lens
- Beam Spread 120°
- 24" Lead Wire w/Connector
- 12V DC or 24 V DC Input Power
- 2-1/2" Round Cutout Hole
- Fully Dimmable (w/TBD.PSDM LED dimmable drivers)
- 3 or 6 port adapter available

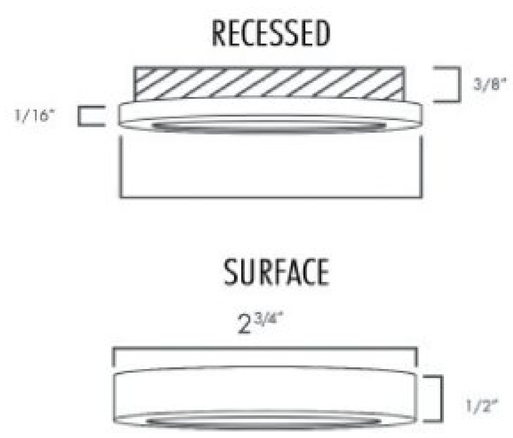

Also available in recessed adjustable version.

Photo: Recessed LED Puck Adjustable for Cabinet Display Lighting

Standard Features

Fully Dimmable with TBD.PSDM and TBD.PSDH Dimmable Drivers

Recessed or Surface Mounted

Long Life: 50,000 hours

c UL us LISTED

Photo: Recessed LED Puck Adjustable for Cabinetry Lighting

TBD.USP - 3W ULTRA SLIM SQUARE LED PUCK LIGHT

Sleek, ultra-slim, single sourced. Has a great new look! 12V DC.

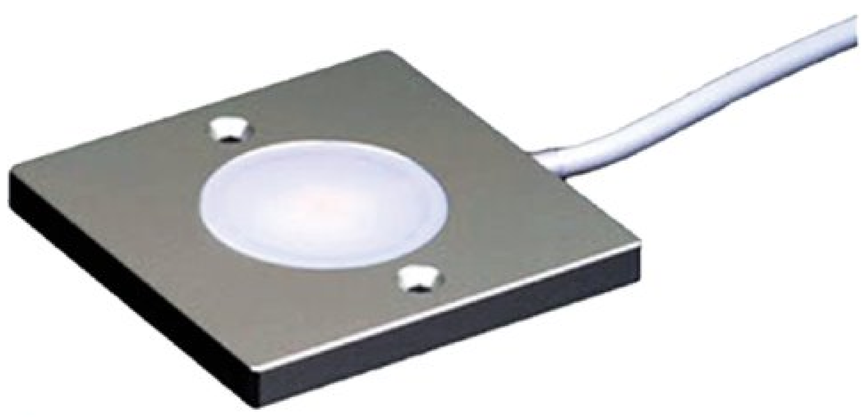

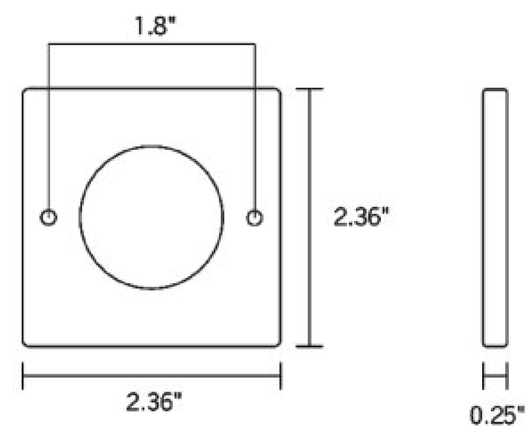

Specifications

- 3 Watt LED
- 240 Lumens
- 12V DC Constant Voltage
- 3000K or 4000K
- 90+ CRI
- Black or Silver Finish
- 20W Halogen Replacement
- Dimensions: 2.36” diameter, 0.25” depth
- Fully Dimmable (w/TBD.PSDM LED dimmable drivers)
- Splitter available for multi-puck installation

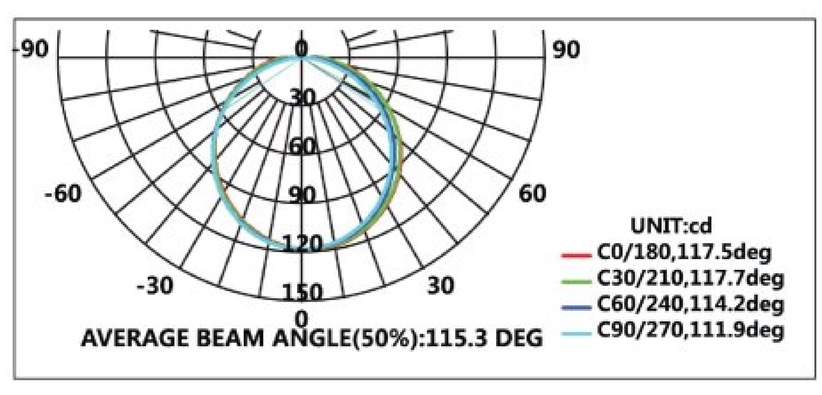

LED Well Light Series

Architectural grade, low profile, LED accent light for interior / exterior use. With virtually no heat, a perfect source of light for in-grade, in-wall, columns, and up-lighting applications. Low maintenance at 50,000 hours rated life cycle.

TBD.WLR - Round Face Plate

TBD.WLS - Square Face Place

Specifications

- 2W LED
- 24 Volts DC
- Color Temp: 3000K or 4000K
- 160 Lumens
- 85+ CRI
- Available Beam Spreads 9°, 15°, 20°, 30°, 45°, and 45° Asymmetrical
- Long Life: 50,000 Hours
- Dimmable
- Rating: Wet Location IP65
- Lead Wires: 20" 18AWG lead wires
- Housing: 3-5/8" D x 6"H
- Round Face Plate: 2-9/16" D x 3-1/8" H
- Square Face Plate: 2-9/16" SQ x 3-1/8" H

TBD.WLRM - Recessed Mini

Specifications

- Exterior / Interior In-grade or In-Wall Applications
- Finish: Stainless Steel
- 3W LED
- 12V AC/DC
- 3000K – Warm White / 4500K – Cool White
- Warm White 180 Lumens / 85 CRI
- Cool White 225 Lumens / 80 CRI
- Available Beam Spreads 9°, 15°, 20°, 30°, 45°, and 45° Asymmetrical
- Long Life: 50,000 Hours
- Rating: Outdoor Location IP67
- Connection: 20" Length Cord
- Dimensions Fixture: H: 3.5", Dia: 2", Trim 1/8" Recessed Profile
- Dimensions Plastic Housing: H: 4", Dia: 4"
- Cutout: 2" Inches
- Mounting: Recessed Only
- Operating temp between -4°F and 112°F.

TBD.WLT - Shielded 4 Options

TBD.WLT1

TBD.WLT2

TBD.WLT3

TBD.WLT4

Specifications

- 2W LED
- 12 Volts AC/DC
- Color Temp: 3000K
- 160 Lumens
- 85+ CRI
- Beam Spread 30°
- Long Life: 50,000 Hours
- Dimmable
- Rating: Wet Location IP65
- Lead Wires: 20" 18AWG lead wires
- Dimensions: Housing: 3-1/8" D x 4-3/4" H
- Face Plate: 3-1/2" D x 4-1/2" H

Photo: LED Strip and Profile Channel for Cove Lighting; Recessed LED Well Light for Uplighting Sculpture; RGBW LED Strip for Submersible Water Feature

Standard Features

Fully Dimmable with TBD.PSDM Dimmable Drivers

85+ CRI

Long Life: 50,000 hours

LED Power Supplies

Recommended for use with all TBD LED SOLUTIONS products. All Class 2, and featuring the latest technologies for soft-on, fade-to-black, flicker-free dimming.

TBD.PSDH

HIGH PERFORMANCE DC DIMMING DRIVER

Available 24V DC for use with MLV forward phase dimming systems. Suitable for commercial or residential use. Integrated technology ensures LED's are not overdriven. Offered in three sizes, for wet or dry locations. UL listed, Class 2 rated.

TBD.PSDE-96W-24V-ECO

CONSTANT VOLTAGE LED DRIVER

Provides .1% dimming for 24V constant voltage LED products, from 25W to 96W. Soft-on and fade-to-black flicker free dimming for EcoSystem controls. Class 2 rated.

LED Accessories

Quick connectors are designed to simplify connections to LED strip series: **TBD.SL18, TBD.SH18, TBD.S36** and **TBD.SH36**. Options are available to meet your specific needs.

TBD.HW3, TBD.HW8, TBD.HW24, TBD.HW60, TBD.HW120
HARDWIRE CONNECTOR
Connection from LED strip to driver used with single LED strips

TBD.EX3, TBD.EX8, TBD.EX24
EXTENSION COUPLING
Connection between two LED strips used with single LED strips

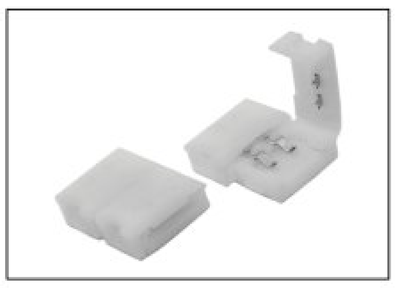

TBD.MC
MINI COUPLING
Connection between two LED strips used with single LED strips

TBD.P-3AP; TBD.P-6AP
3 OR 6 PORT ADAPTER
LED Puck LIght Accessory

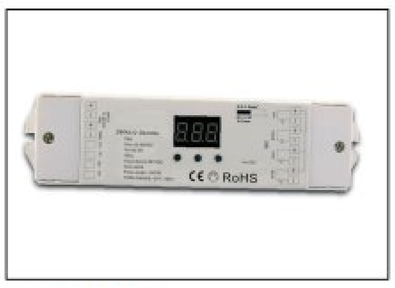

TBD.DMX
RGB/RGBW DMX DECODER
Allows LED Strips to interface with DMX512 controllers.

TBD. RGB-SGU2
RGB WALL CONTROLLER
DMX lighting control

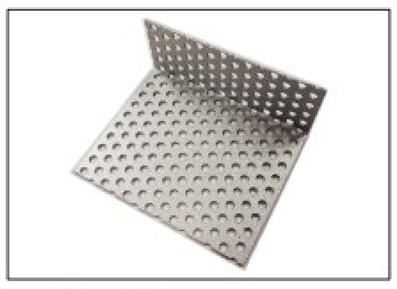

TBD.PMS
MUD-IN MESH BRACKET
Used with TBD.E35S and TBD.E35SW LED Aluminum Profile Channels

MOUNTING CLIPS
Included with TBD LED Aluminum Profile Channels

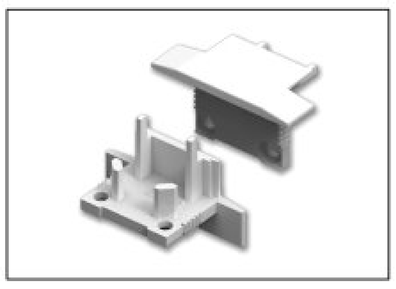

END CAPS
Included with TBD LED Aluminum Profile Channels

LED Festoon Track System

A superior linear luminaire that is light weight and easily installed. Festoon Lamps can be angled for optimum beam spread. This environmentally friendly product is durable, long lasting, and cool to the touch. This system can be used in both residential and commercial settings for multiple applications such as cove, display, under cabinet, and custom installations. Great for retro-fits.

Shown Below:
Optional clear lens and
Looped end (cartridge style)

Application

This system can be used in both residential and commercial settings for multiple applications such as cove, display, and under cabinet lighting. Great for retro-fits!

Certification

UL 2108; Issue: 2004/02/27 Ed:1 Rev:2011/04/27 UL Standard for Safety Low Voltage Lighting Systems;

UL1598, Issue:2008/09/17 Ed:3 Luminaires; General Instruction No.1 2010/01/11; CSA C22.2#9.0,

Issue:1996/05/15 Ed:1 Rev:2011/07/27 General Requirements for Luminaires - (Reaffirmed 2011)

Standard Features

- LED Festoon Track System with white finish
- Lengths available 1-5 m, 1 m increments, fully field cuttable
- Chrome plate spring steel lamp clips
- Socket spacing at 1 7/8" – sockets can be removed and placed in desired increments in the field
- J-Box styles as standard and low profile
- Class II 12V or 24V AC/DC system
- Dimmable – DC transformers recommended for optimal dimming
- Used with TBD LED Festoon Lamps under 1W for individual runs of up to 100W
- Festoon Lamps can be angled for optimum beam spread

Photo: LED Lamps and Festoon Track System for Cove Lighting

LED Festoon Lamp

The LED Festoon Lamp can be used for multiple applications including cove, display, under cabinet lighting, and custom installation. This lamp is durable, sustainable, long lasting and cool to the touch. It fits in all standard festoon sockets, and can be used to retro fit all festoon tracks systems. Lamp color consistency is optimized with limited binning.

Standard Features

- Fits standard festoon socket (1 7/8")
- Cool, Neutral and Warm White colors
- 24V AC/DC operation – also available in 12V by request
- DC power supply recommended for optimal dimming
- Dimmable to 10%, with low voltage magnetic dimmer
- Solid state technology
- Instant on, no warm up time required
- 50,000 Hours
- Environmentally friendly
- No IR, No UV (will not damage artwork or fabrics)
- Lumen Maintenance: 80% @ 50,000 hours

Optional Features

- Aluminum housing, with clear lens, for damp areas or exposed installations
- Looped end caps (Cartridge Style)

Photo: LED Festoon Lamps and Track System for Custom Chandelier

Application

This system can be used in both residential and commercial settings for multiple applications such as cove, display, and under cabinet lighting.

Certification

*US7,307,391
8,115,411
8,791,650
and International Patents Pending

TBD LED SOLUTIONS

218 E Valley Rd, Ste 104 – PMB377, Carbondale, CO 81623

(970) 963-1336

For full product line visit us at:

www.tbdledsolutions.com

3 Year Limited Warranty

TBD LED SOLUTIONS warrants the LED light products against defects in material or workmanship for a period of three years from date of original purchase, and agrees to repair or, at the company's option, replace a defective product without charge for either replacement parts or labor during such time. Contact TBD LED SOLUTIONS for a copy of the complete warranty.

Lighting Design Photographs courtesy of Robert Singer & Associates, Inc.