waukesha®

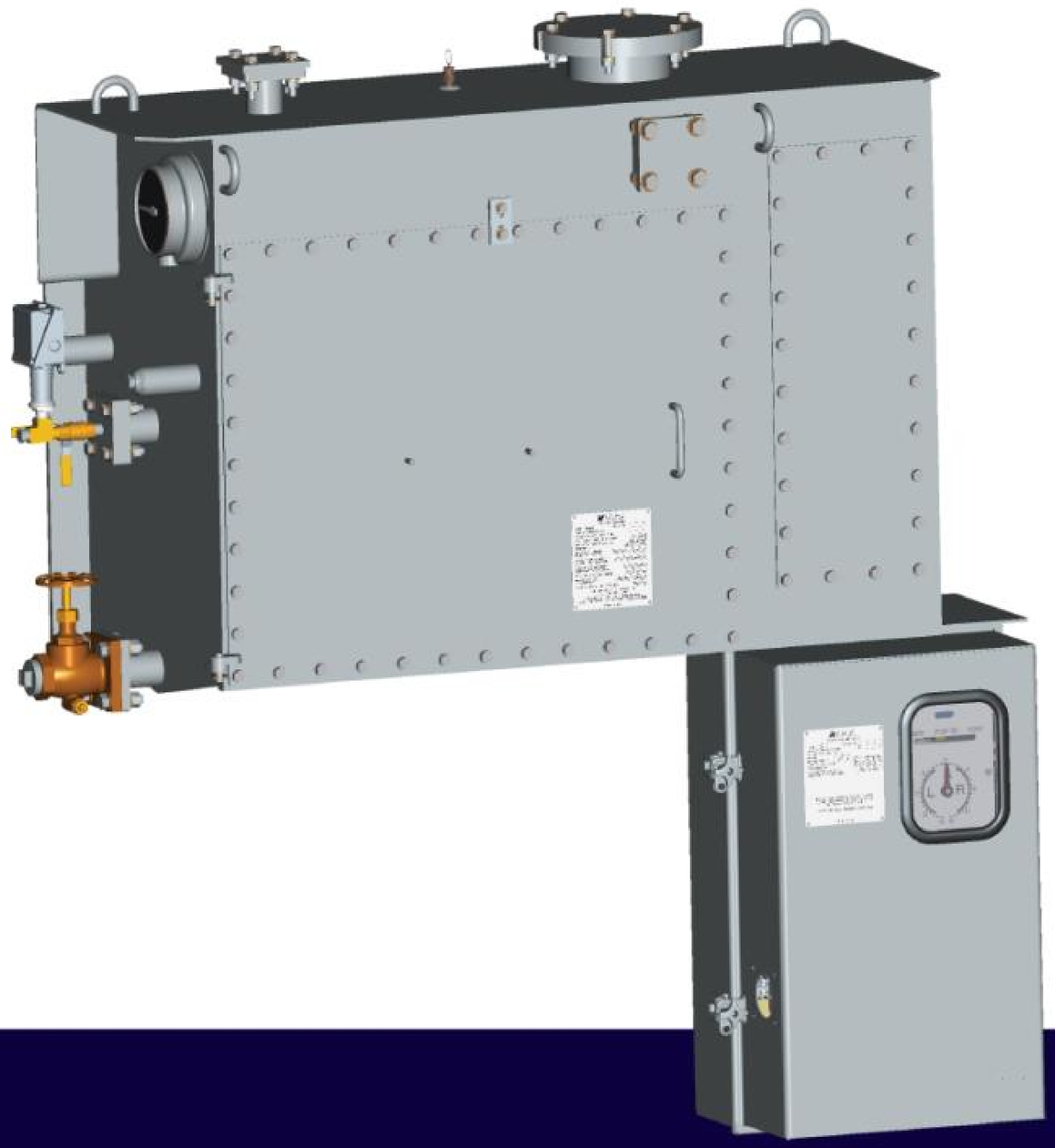

WAUKESHA® UZD®

LOAD TAP CHANGER KITS

WAUKESHA UZD

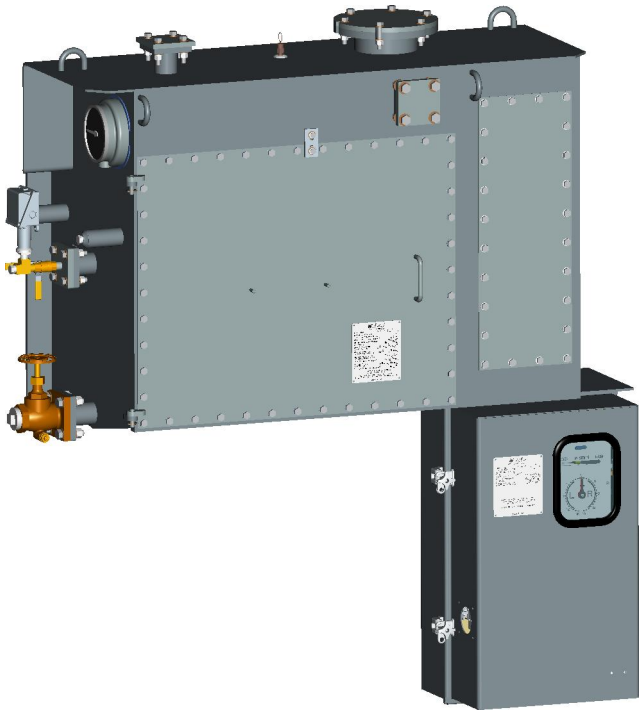

UZD LTC

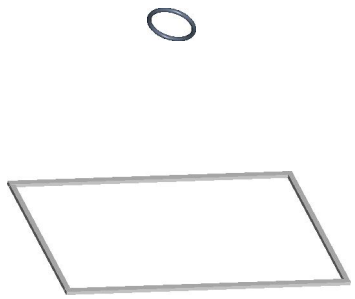

GASKETS & O-RINGS

MISCELLANEOUS

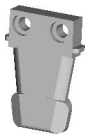

UZD KITS

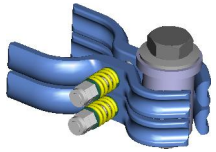

- 1030-001K KIT-REVERSE SW. UPGRADE
- 1030-001KE KIT-REVERSE SW, UPGRADE
- 1030-017K KIT-REVERSE SW. UPGRADE
- 1030-021K KIT-UZD CONTACT
- 1030-023K KIT-SELECTOR SWITCH
- 1030-024K KIT-TRANSFER STOCK
- 1030-025K KIT-MAIN SLIP CONTACT BOWTIE
- 1030-026K KIT-MAIN BREAKING CONTACT
- 1030-027K KIT-MAIN CONT. ARM W. ROLLERS
- 1030-029K KIT-COUNTER ASSEMBLY
- 1030-031K KIT-BODINE MOTOR REPLACEMENT
- 1030-036K KIT-TOOL
- 1030-042K KIT-BRAKE ROLLER UZD
- 1030-043K KIT-BREAK ROLLER BULLETIN
- 1030-1726K KIT-MAIN SEL. XFMRS PRIOR TO 1975
- 1030-1730K KIT-REV. CONT. ARM SUB-ASSY.
- 1030-1732K KIT-GASKETS
- 1030-1749K KIT-UZD, BUE, REPLACEMENT PARTS
- 1030-1757K KIT-LIMIT SWITCH 3 STAGE
- 1030-1756K KIT-LIMIT 2 STAGE
- 1030-1758K KIT-TRANS MODIF RETROFIT/33.
- 1030-2114K KIT-CONTACT HOLDER STAT. & HARDWARE

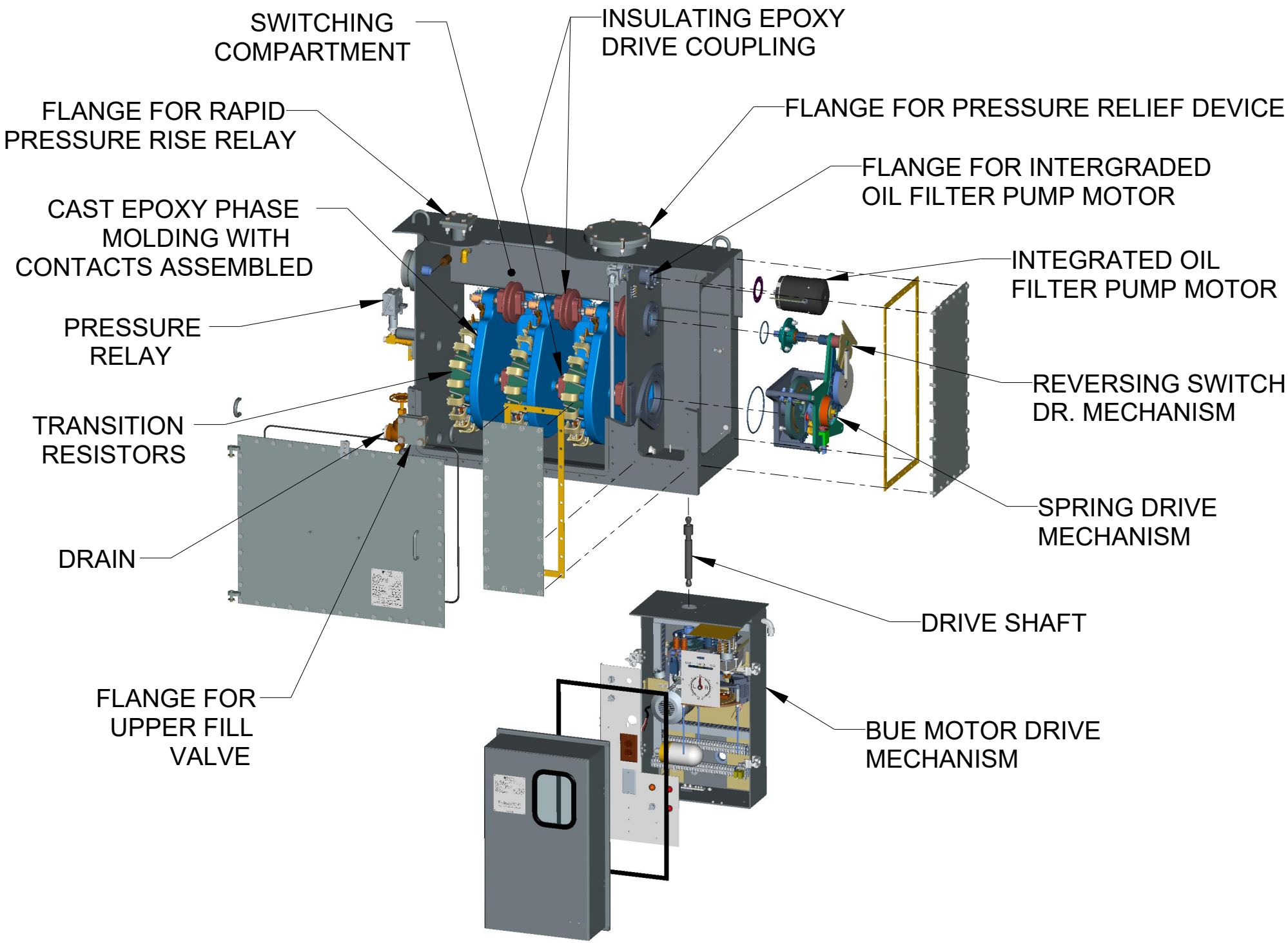

UZD LTC ASSEMBLY

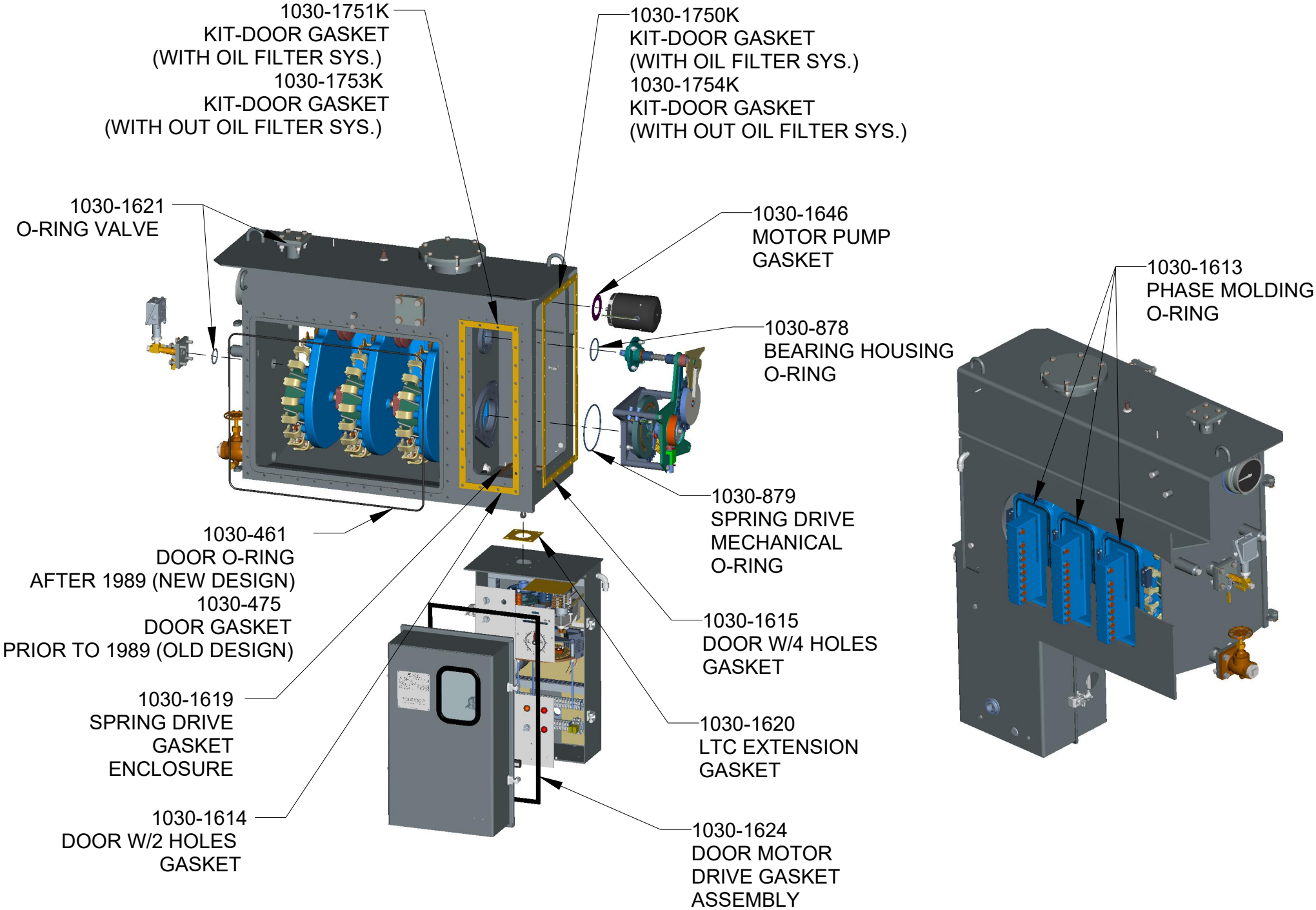

CLICK ON THIS NOTE FOR COMPLETE GASKET KIT, P/N 1030-1732K

UZD GASKETS LOCATION

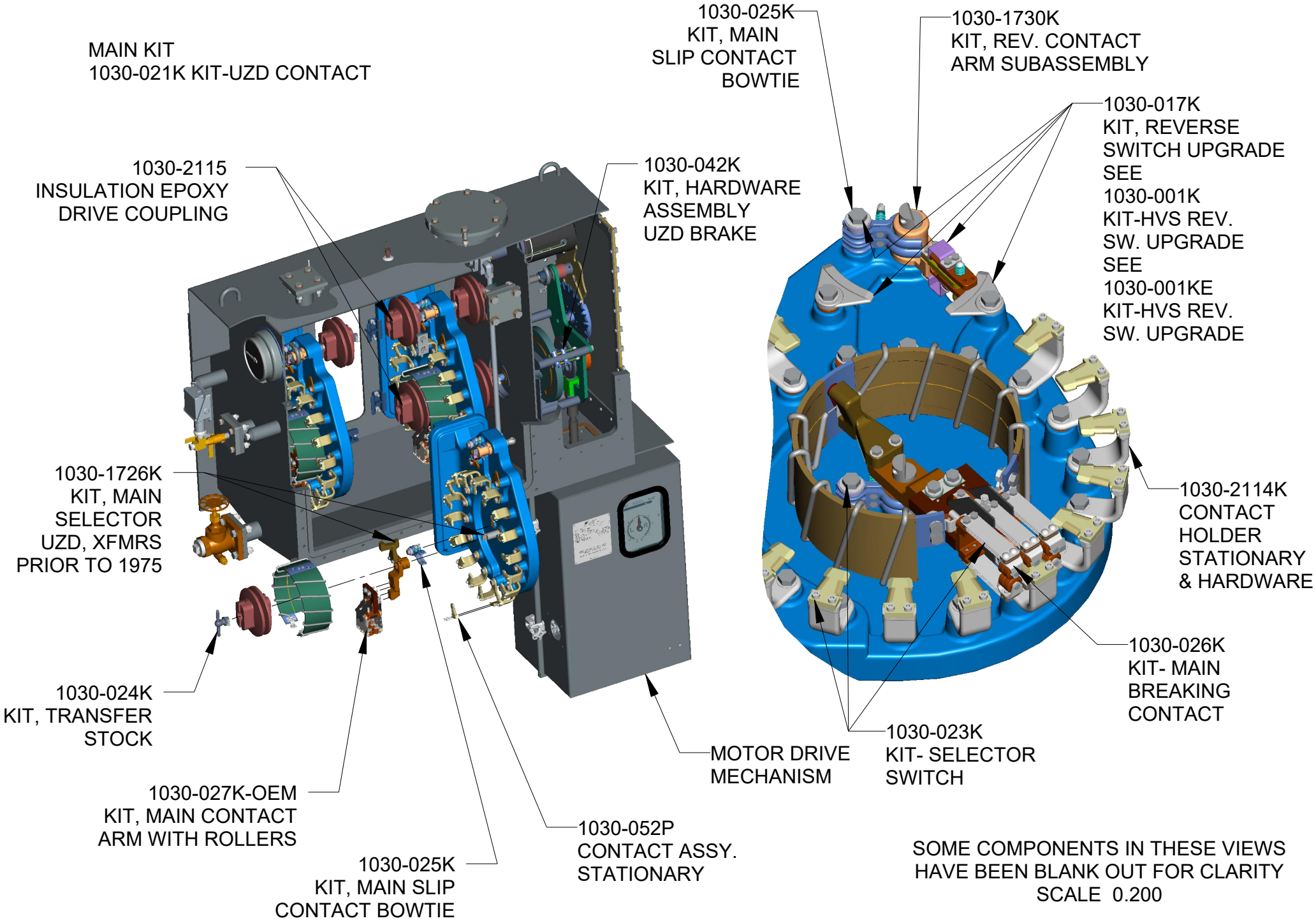

UZD KITS & PARTS LOCATION

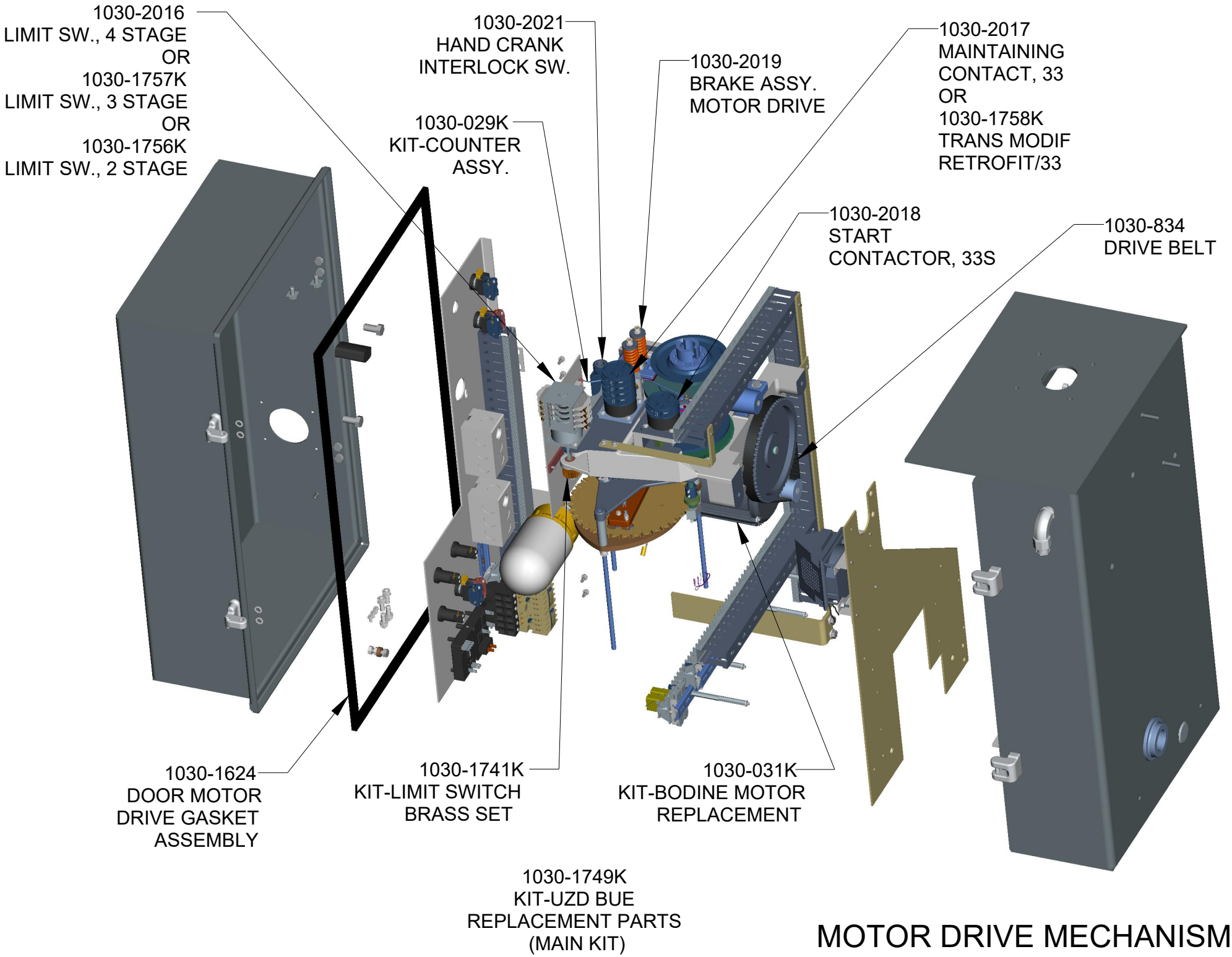

MOTOR DRIVE MECHANISM

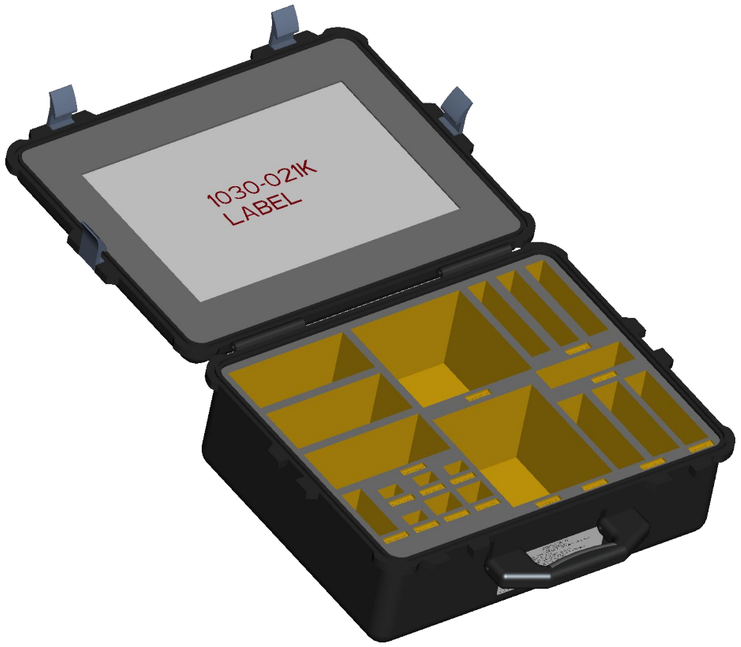

1030-1756
STANDARD PELICAN CASE
ASSEMBLY FOR 1030-021K V1

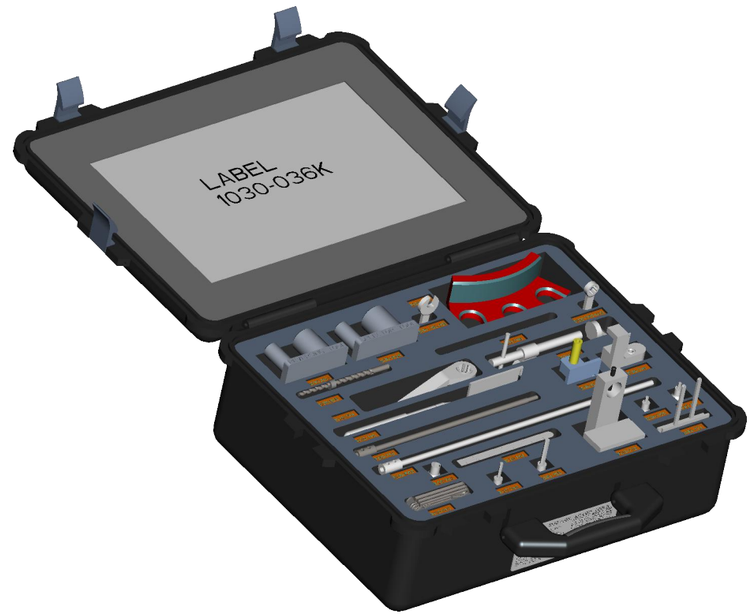

1030-2054
STANDARD PELICAN CASE
ASSEMBLY FOR 1030-036K

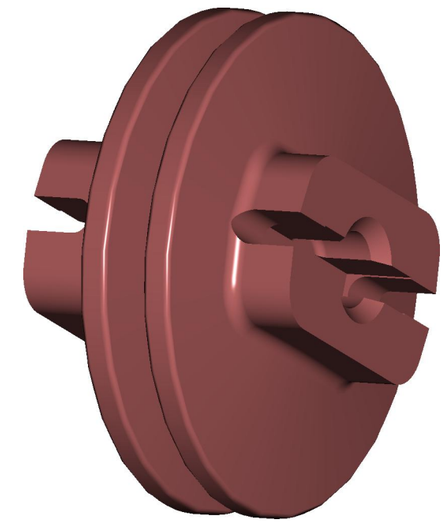

1030-2115
COUPLING
INSULATING DRIVE

1030-036K
TOOLS KIT

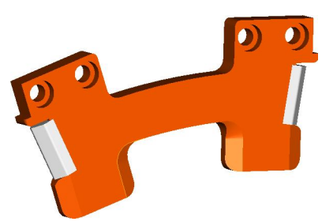

1030-1754
CONTACT LTC - UZD
(UNPLATED)

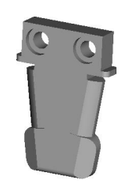

1030-052P
CONTACT ASSEMBLY
STATIONARY

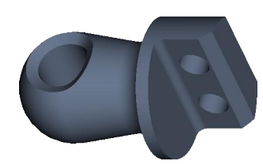

1030-1784
SHAFT

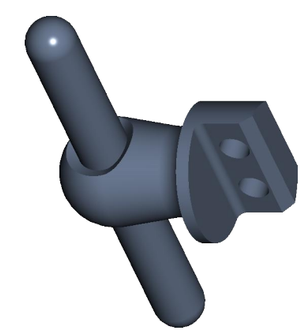

1030-1785
SHAFT ASSEMBLY
SHORT

MISCELLANEOUS UZD

EQUIPMENT TYPE / NO.					DWG. NO.	SH	REV.
UZD	2	3	4	5	6	1	E
					1030-1732K		

NOTES:
1. FOR MORE DETAIL PLEASE SEE INDIVIDUAL GASKET DRAWINGS.

2 THESE GASKETS USE IN UNIT WITH INTEGRATED OIL FILTER SYSTEM.

3 THESE GASKETS USE IN UNIT WITH OUT INTEGRATED OIL FILTER SYSTEM.

REVISIONS				
REV	DESCRIPTION	DATE	APPROVAL	
C	1. ADDED GASKETS ON DRAWING PER ECR #150327A	3/27/15	TL	JP
D	1. REPLACED INDIVIDUAL GASKETS BY KITS PER ECR # 180921A	09/24/18	SK	JP
D1	1. CHANGED QTY OF 1030-1752K & -1753K. PER ECR # 181004C	10/04/18	SK	JP
E	1. ITEM # 6 WAS 1030-1752K PER ECR # 181220K	12/20/18	SK	JP

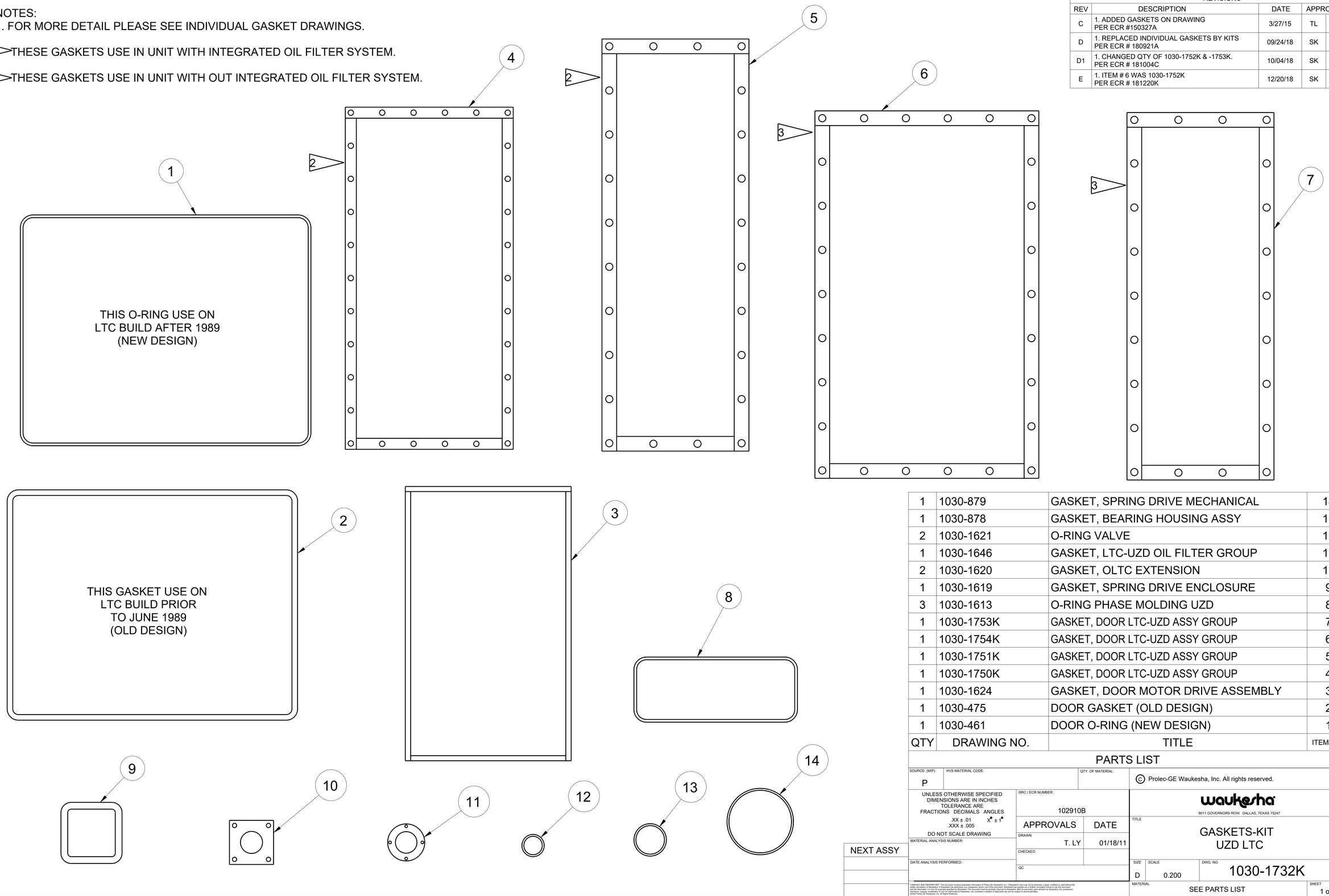

QTY	DRAWING NO.	TITLE	ITEM NO.
1	1030-879	GASKET, SPRING DRIVE MECHANICAL	14
1	1030-878	GASKET, BEARING HOUSING ASSY	13
2	1030-1621	O-RING VALVE	12
1	1030-1646	GASKET, LTC-UZD OIL FILTER GROUP	11
2	1030-1620	GASKET, OLTC EXTENSION	10
1	1030-1619	GASKET, SPRING DRIVE ENCLOSURE	9
3	1030-1613	O-RING PHASE MOLDING UZD	8
1	1030-1753K	GASKET, DOOR LTC-UZD ASSY GROUP	7
1	1030-1754K	GASKET, DOOR LTC-UZD ASSY GROUP	6
1	1030-1751K	GASKET, DOOR LTC-UZD ASSY GROUP	5
1	1030-1750K	GASKET, DOOR LTC-UZD ASSY GROUP	4
1	1030-1624	GASKET, DOOR MOTOR DRIVE ASSEMBLY	3
1	1030-475	DOOR GASKET (OLD DESIGN)	2
1	1030-461	DOOR O-RING (NEW DESIGN)	1

PARTS LIST

NEXT ASSY

SOURCE: (M/P) P
HVS MATERIAL CODE:
QTY. OF MATERIAL:

UNLESS OTHERWISE SPECIFIED
DIMENSIONS ARE IN INCHES
TOLERANCE ARE
FRACTIONS DECIMALS ANGLES
.XX ± .01 X° ± 1°
.XXX ± .005
DO NOT SCALE DRAWING

MATERIAL ANALYSIS NUMBER:
DATE ANALYSIS PERFORMED:

DRC / ECR NUMBER: 102910B

APPROVALS	DATE
DRAWN T. LY	01/18/11
CHECKED	
QC	

© Prolec-GE Waukesha, Inc. All rights reserved.

waukesha
9011 GOVERNORS ROW DALLAS, TEXAS 75247

TITLE
GASKETS-KIT
UZD LTC

SIZE	SCALE	DWG. NO.	REV.
D	0.200	1030-1732K	E

MATERIAL: SEE PARTS LIST
SHEET: 1 of 1

COMPANY AND PROPRETARY: This document contains proprietary information of Prolec-GE Waukesha Inc. ("Waukesha") and may not be disclosed, copied, modified or used without the express written consent of Waukesha. Any unauthorized use, disclosure, modification or reproduction of this document or any information in it may be prosecuted to the full extent of the law. This document must be promptly returned to Waukesha, after its use and/or upon demand by Waukesha. Any possession, and the information in it only for purposes specified by Waukesha. This document must be promptly returned to Waukesha, after its use and/or upon demand by Waukesha. Any possession, and the information in it only for purposes specified by Waukesha. Any unauthorized use, disclosure, modification or reproduction of this document or any information in it may be prosecuted to the full extent of the law. Unauthorized use, disclosure, can constitute a violation of applicable law and be subject to severe penalties.
©2022 Prolec-GE Waukesha, Inc. All Rights Reserved.

EQUIPMENT TYPE / NO. UZD

DWG. NO. 1030-001K | SH 1 | REV. K1

REVISIONS				
REV	DESCRIPTION	DATE	APPROVAL	
K	1. REDRAWN REORGANIZE FOR CLARITY 2. ADDED HARDWARE PER ECR #190426A	4/26/19	TL	JP
K1	1) ADD ADDITIONAL REF. TO ITEM 12 BAL. PER ECR# 200207B	2/7/2020	AM	JP

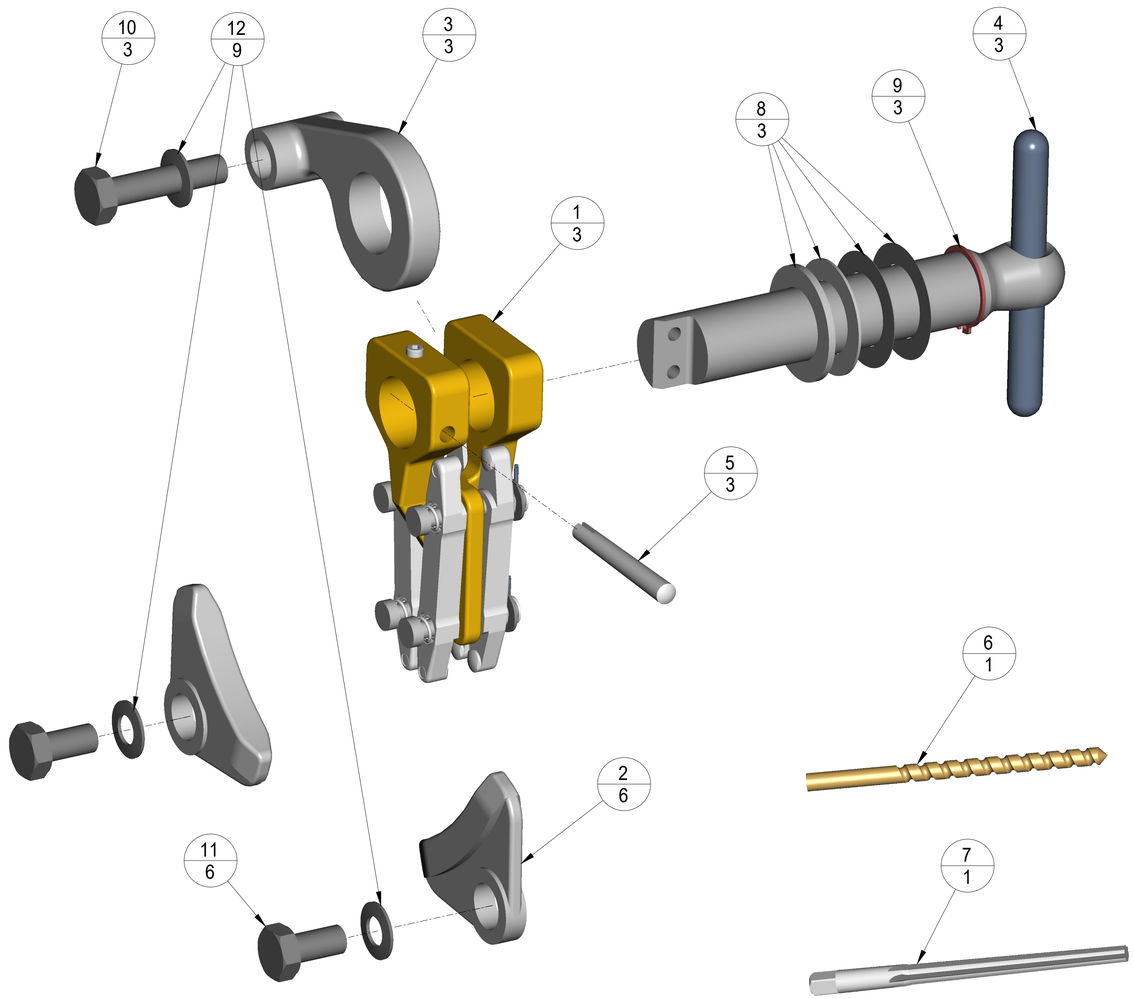

THREE PHASE
ISO VIEW SHOWN FOR REF. ONLY ASSEMBLY NOT REQUIRED

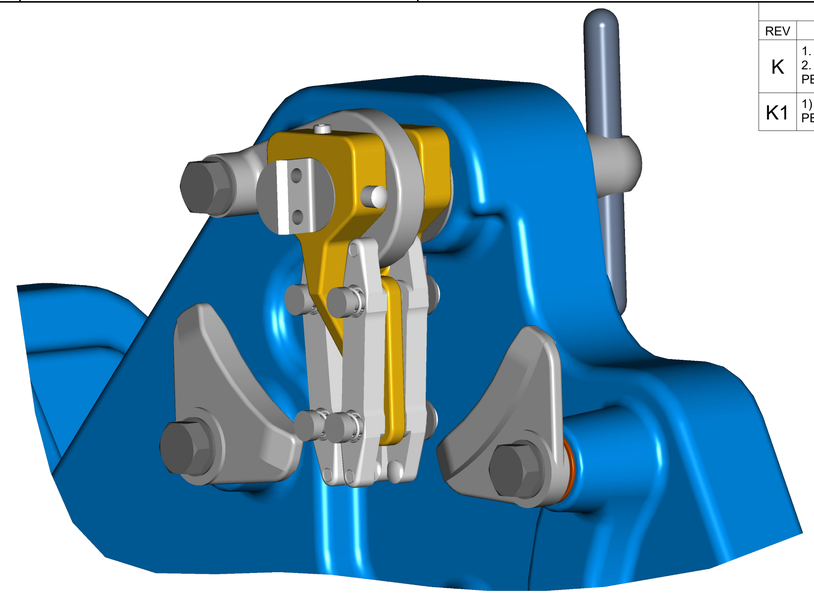

ISO VIEW SHOWN FOR REF. ONLY
FOR MORE DETAIL
SEE INSTRUCTION SHEETS

QTY	DRAWING NO.	TITLE	ITEM NO.
1	1030-130	INSTRUCTION SHEETS	13
9	8010-101-26	WASHER, BELLEVILLE, M10	12
6	8010-199-811	SCREW, HEX M10 X 1.5 X 20 LG SS	11
3	8010-199-817	SCREW, HEX M10 X 1.5 X 45 LG SS	10
3	1030-480	SNAP RING	9
3	1030-170	SHIM, PACK	8
1	1030-364	TAPERED REAMER NO. 5 STR. FLUTE	7
1	1030-363	COBALT DRILL BIT, NO. C (∅ .242), COATED	6
3	1000-083	PIN, TAPERED	5
3	1030-485	SHAFT ASSEMBLY, LONG	4
3	1030-060P	RING, COLLECTOR	3
6	1030-059P	CONTACT, STATIONARY, SELECTOR SWITCH	2
3	1030-054P	CONTACT ASSY. MOVING, REVERSE SWITCH	1

PARTS LIST

NEXT ASSY

SOURCE: (M/P) M | HVS MATERIAL CODE: | QTY. OF MATERIAL:

UNLESS OTHERWISE SPECIFIED
DIMENSIONS ARE IN INCHES
TOLERANCE ARE
FRACTIONS DECIMALS ANGLES
.XX ± .01 X° ± 1°
.XXX ± .005
DO NOT SCALE DRAWING

MATERIAL ANALYSIS NUMBER:

DATE ANALYSIS PERFORMED:

DRC / ECR NUMBER:

APPROVALS	DATE
DRAWN T. LY	4/26/19
CHECKED	
QC	

© Prolec-GE Waukesha, Inc. All rights reserved.

waukesha
9011 GOVERNORS ROW DALLAS, TEXAS 75247

TITLE
KIT - REVERSING SWITCH UPGRADE

SIZE D | SCALE 1.000 | DWG. NO. 1030-001K | REV. K

MATERIAL SEE PARTS LIST | SHEET 1 of 1

COMPANY AND PROPRIETARY: This document contains proprietary information of Prolec-GE Waukesha, Inc. ("Waukesha") and may not be disclosed, copied, modified or used without the written permission of Waukesha. If Waukesha has authorized your possession and/or use of this document, Waukesha has granted you a limited, revocable license to use the document solely for the purpose for which it was provided by Waukesha. Unauthorized disclosure, copying, modification or use of this document, or any information contained therein, obtained by Waukesha this possession, disclosure, copying, modification or use not authorized by Waukesha, can constitute a violation of applicable law and be subject to severe penalties.
©2022 Prolec-GE Waukesha, Inc. All Rights Reserved.

EQUIPMENT TYPE / NO. UZD

DWG. NO. 1030-001KE | SH 1 | REV. D

REVISIONS				
REV	DESCRIPTION	DATE	APPROVAL	
D	1. REDRAWN REORGANIZE FOR CLARITY 2. ADDED HARDWARE PER ECR # 190429A	4/29/19	TL	JP

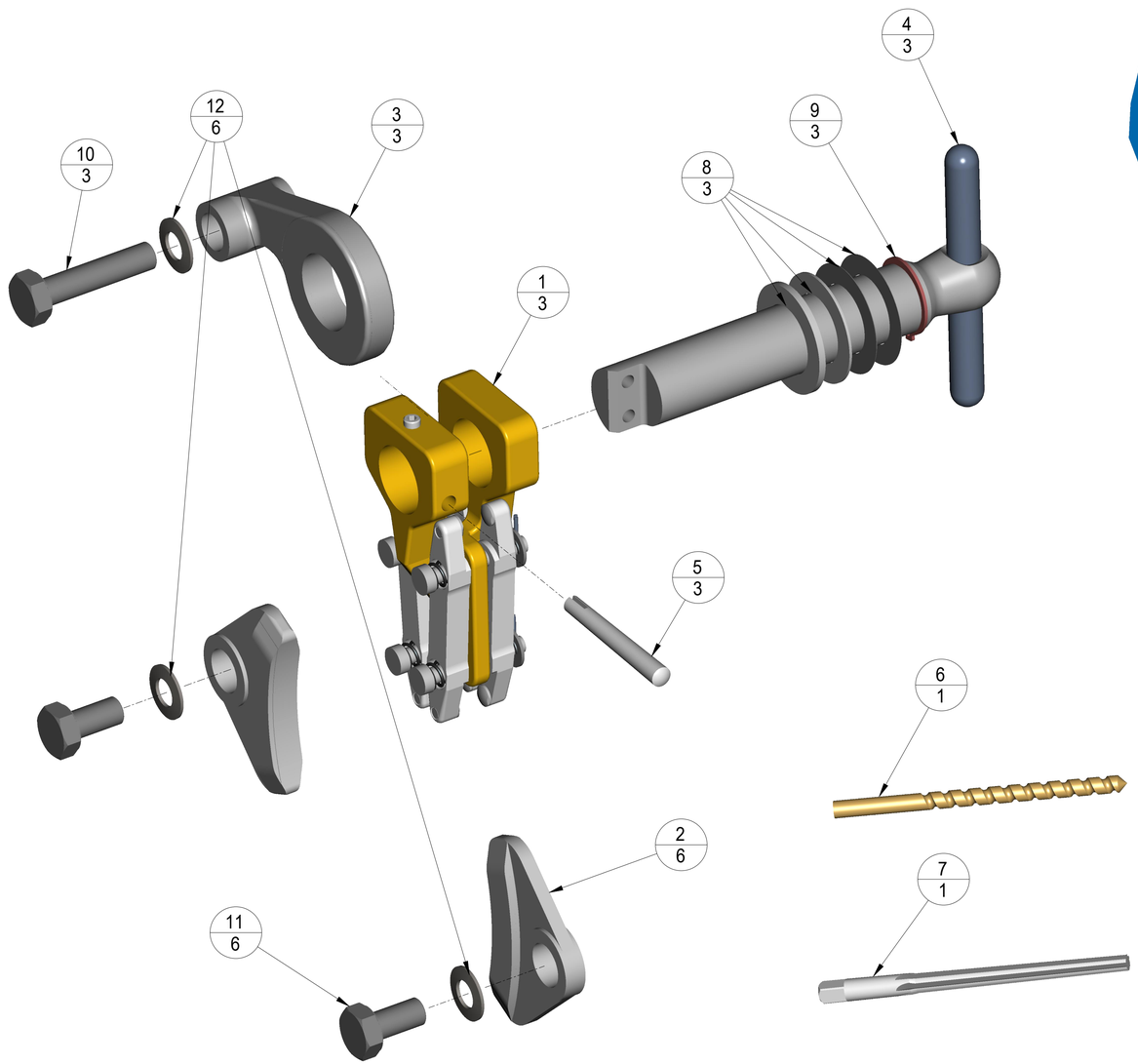

THREE PHASE
ISO VIEW SHOWN FOR REF. ONLY ASSEMBLY NOT REQUIRED

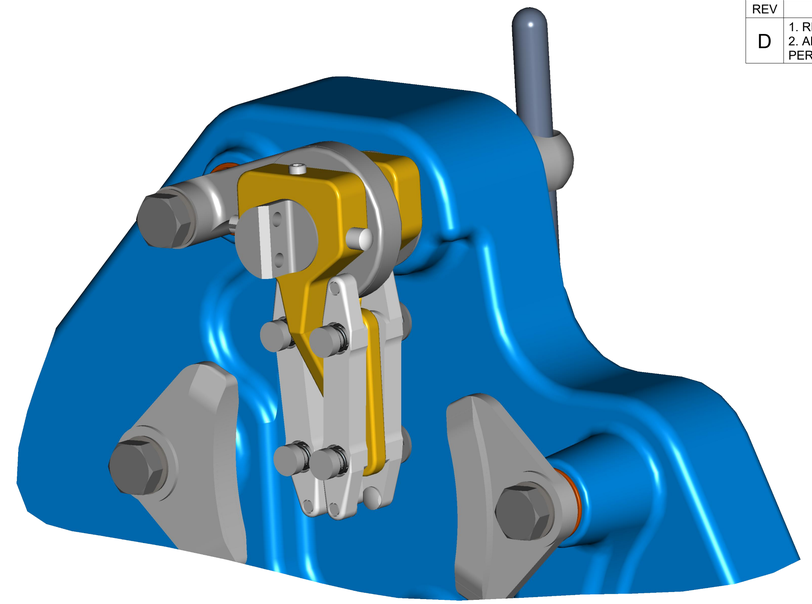

ISO VIEW SHOWN FOR REF. ONLY
FOR MORE DETAIL
SEE INSTRUCTION SHEETS

13 / 1 — INSTRUCTION SHEETS

QTY	DRAWING NO.	TITLE	ITEM NO.
1	1030-130	INSTRUCTION SHEETS	13
6	8010-101-26	WASHER, BELLEVILLE, M10	12
6	8010-199-811	SCREW, HEX M10 X 1.5 X 20 LG SS	11
3	8010-199-817	SCREW, HEX M10 X 1.5 X 45 LG SS	10
3	1030-480	SNAP RING	9
3	1030-170	SHIM, PACK	8
1	1030-364	TAPERED REAMER NO. 5 STR. FLUTE	7
1	1030-363	COBALT DRILL BIT, NO. C (∅ .242), COATED	6
3	1000-083	PIN, TAPERED	5
3	1030-485	SHAFT ASSEMBLY, LONG	4
3	1030-060E	RING, COLLECTOR	3
6	1030-059E	CONTACT, STATIONARY, SELECTOR SWITCH	2
3	1030-054E	CONTACT ASSY. MOVING, REVERSE SWITCH	1

PARTS LIST

NEXT ASSY

SOURCE: (M/P) M | HVS MATERIAL CODE: | QTY. OF MATERIAL:

UNLESS OTHERWISE SPECIFIED
DIMENSIONS ARE IN INCHES
TOLERANCE ARE
FRACTIONS DECIMALS ANGLES
.XX ± .01 X° ± 1°
.XXX ± .005
DO NOT SCALE DRAWING

MATERIAL ANALYSIS NUMBER:

DATE ANALYSIS PERFORMED:

DRC / ECR NUMBER:

APPROVALS	DATE
DRAWN T. LY	4/29/19
CHECKED	
QC	

© Prolec-GE Waukesha, Inc. All rights reserved.

waukesha
9011 GOVERNORS ROW DALLAS, TEXAS 75247

TITLE
KIT - REVERSING SWITCH UPGRADE (ELR)

SIZE	SCALE	DWG. NO.	REV.
D	1.000	1030-001KE	D

MATERIAL: SEE PARTS LIST | SHEET 1 of 1

COMPANY AND PROPRIETARY: This document contains proprietary information of Prolec-GE Waukesha, Inc. ("Waukesha") and may not be disclosed, copied, modified or used without the written permission of Waukesha. If Waukesha has authorized your possession and/or use of this document, Waukesha has granted you a limited, revocable license to use this document solely for the purpose for which it was transmitted to you. Unauthorized use or disclosure of this document, in whole or in part, including, but not limited to, the reproduction, distribution, modification, storage, transmission or use not authorized by Waukesha, can constitute a violation of applicable law and be subject to severe penalties.
©2019 Prolec-GE Waukesha, Inc. All Rights Reserved.

EQUIPMENT TYPE / NO.	DWG. NO.	SH	REV
WAUKESHA UZD	1030-017K	1	K

REVISIONS				
REV	DESCRIPTION	DATE	APPROVAL	
J	1. REDRAWN ON PRO/E DATA BASE PER ECR # 140203A	10/31/13	TL	JP
K	1. ADD HARDWARE TO DRAWING 8010-101-26, 8010-199-811 6 EA. PER ECR #140321B	3/21/14	TL	JP

NOTES:
1. WAUKESHA P/N - 0550012R1306.

2 PLACE ALL HARDWARE IN A PLASTIC BAG.

3 PLACE THIS ITEM IN A SEPARATE PLASTIC BAG.

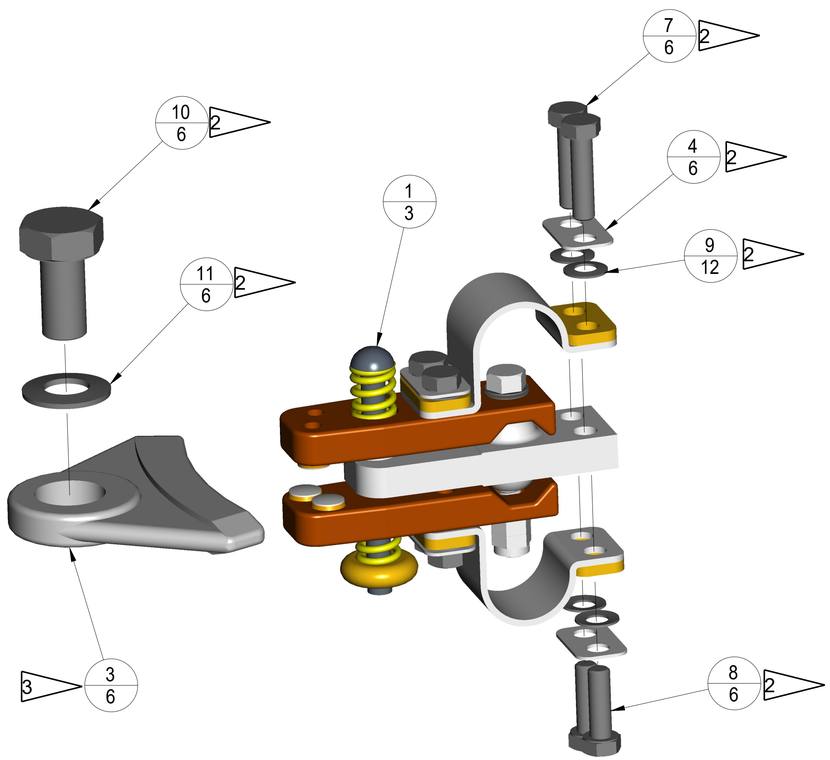

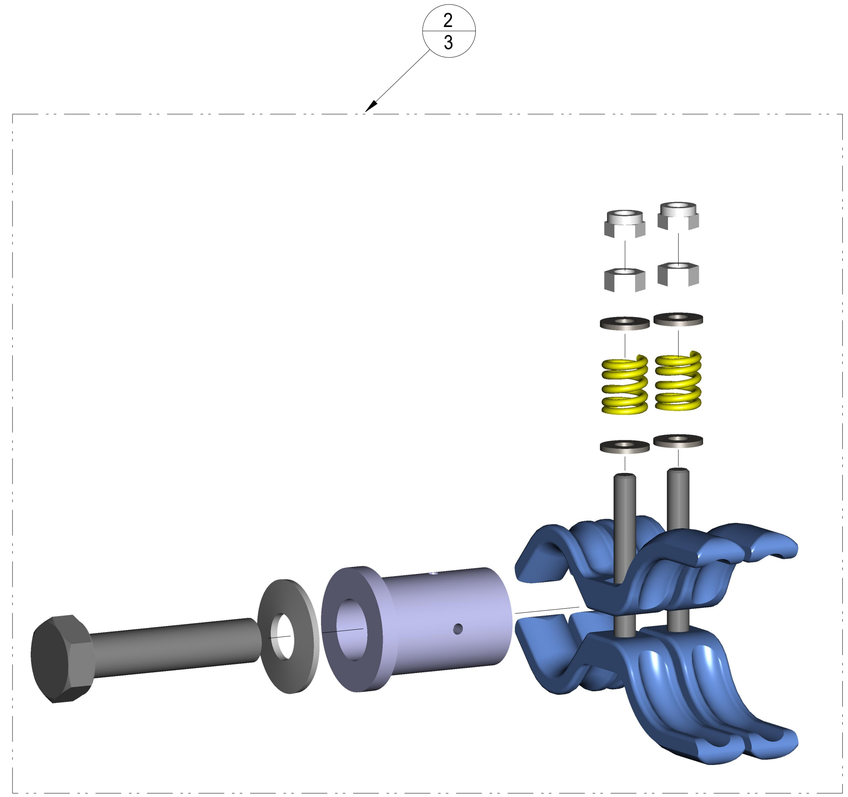

INSTALLATION DRAWING PACKET
5 / 1

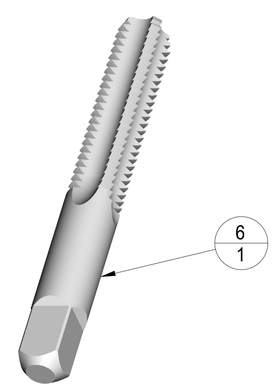

SCALE 2.000

QTY	DRAWING NO.	TITLE	ITEM NO.
6	8010-101-26	WASHER, BELLEVILLE, M10	11
6	8010-199-811	SCREW, HEX HD M10 X 1.5 X 20 LG	10
12	8010-101-24	WASHER, BELLEVILLE 204 ID X .394 OD X .020 THK	9
6	8010-115-509	SCREW, HEX HEAD, STEEL M5 X 0.8 X 16 LG	8
6	8010-115-511	SCREW, H HEAD, STEEL M5 X 0.8 X 20LG	7
1	1030-1203	BOTTOM TAP M10 X 1.5	6
1	1030-380	DRAWING PACKET	5
6	1030-224	WASHER, 2-HOLE	4
6	1030-384P	CONTACT, STATIONARY REVERSING SWITCH	3
3	1030-025K	KIT - MAIN SLIP CONTACT (BOWTIE)	2
3	1030-371P	MOVING REV. CHANGEOVER SEL. SW. ASSEMBLY	1

PARTS LIST

NEXT ASSY
1030-021K

HIGH VOLTAGE SUPPLY

SOURCE: (M/P) P
HVS MATERIAL CODE:
QTY. OF MATERIAL:

© Prolec-GE Waukesha, Inc. All rights reserved.

UNLESS OTHERWISE SPECIFIED
DIMENSIONS ARE IN INCHES
TOLERANCE ARE
FRACTIONS DECIMALS ANGLES
.XX ± .01 X° ± 1°
.XXX ± .005
DO NOT SCALE DRAWING

DRC / ECR NUMBER:

APPROVALS	DATE
DRAWN T. LY	10/31/13
CHECKED	
QC	

MATERIAL ANALYSIS NUMBER:
DATE ANALYSIS PERFORMED:

waukesha
9011 GOVERNORS ROW DALLAS, TEXAS 75247

TITLE
KIT - REVERSE SWITCH UPGRADE

SIZE	SCALE	DWG. NO.	REV.
D	1.500	1030-017K	K

MATERIAL: SEE PARTS LIST
SHEET 1 of 1

COPYRIGHT AND PROPRIETARY: This Drawing contains proprietary information of SPX Transformer Solutions, Inc. and may not be disclosed, copied, modified or used without the written permission of SPX Transformer Solutions, Inc. If SPX Transformer Solutions, Inc. has authorized your permission and/or use of this Drawing, SPX Transformer Solutions, Inc. has granted you a limited license to use this Drawing and the information in it only for purposes specified by SPX Transformer Solutions, Inc. Unauthorized use of this Drawing and the information in it may result in civil liability and criminal prosecution. Copyright laws and other laws and treaties protect this Drawing and its contents. Disclosure, copying, modifications or use not authorized by SPX Transformer Solutions, Inc. can constitute a violation of applicable law and be subject to severe penalties.

EQUIPMENT TYPE / NO.: WAUKESHA UZD

DWG. NO.: 1030-021K | SH: 1 | REV.: U

NOTES:
1. V1 FOR 33-STEP TAP CHANGER.
   V2 FOR 17-STEP TAP CHANGER.

REVISIONS				
REV	DESCRIPTION	DATE	APPROVAL	
P	1. REDRAWN ON PRO/E DATA BASE PER ECR # 140314B	11/19/13	TL	JP
R	1. ADD TANK DOOR GASKET PER ECR # 140701A	7/2/14	TL	JP
R1	1. REMOVE SHEETS 3 TO 5, NPOBK PER ECR #150326B	3/26/15	TL	JP
T	1. REMOVE V2 STAT. CONTACT 2. ADD NOTE 1, PER ECR #190115D	1/15/19	TL	JP
T1	1. LINK PALICAN CASE TO NEXT ASSEMBLY PER ECR #190215C	2/19/19	TL	JP
U	1. ADDED QTY OF 12 TO 1030-052P, V2 PER ECR #191002A	10/2/19	TL	JP

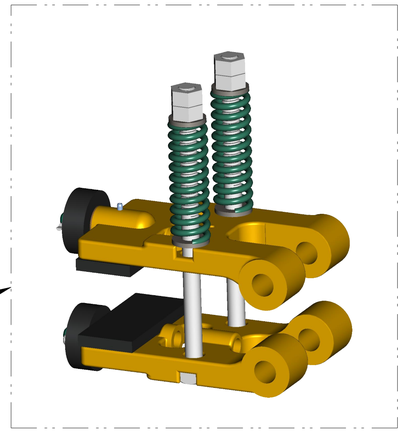

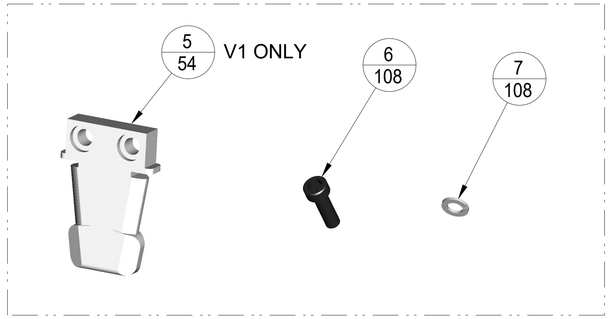

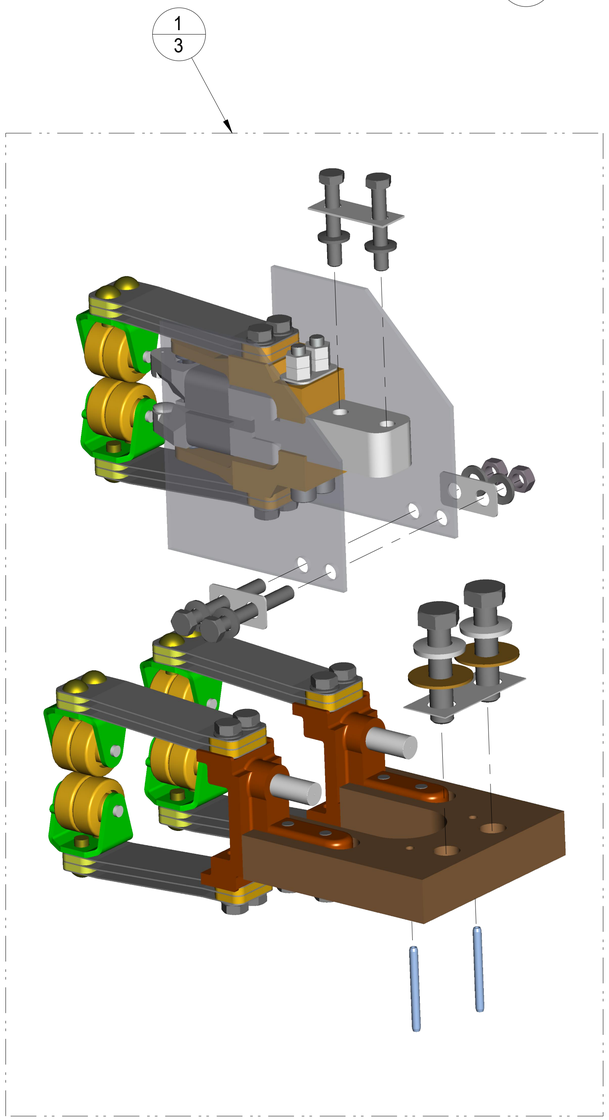

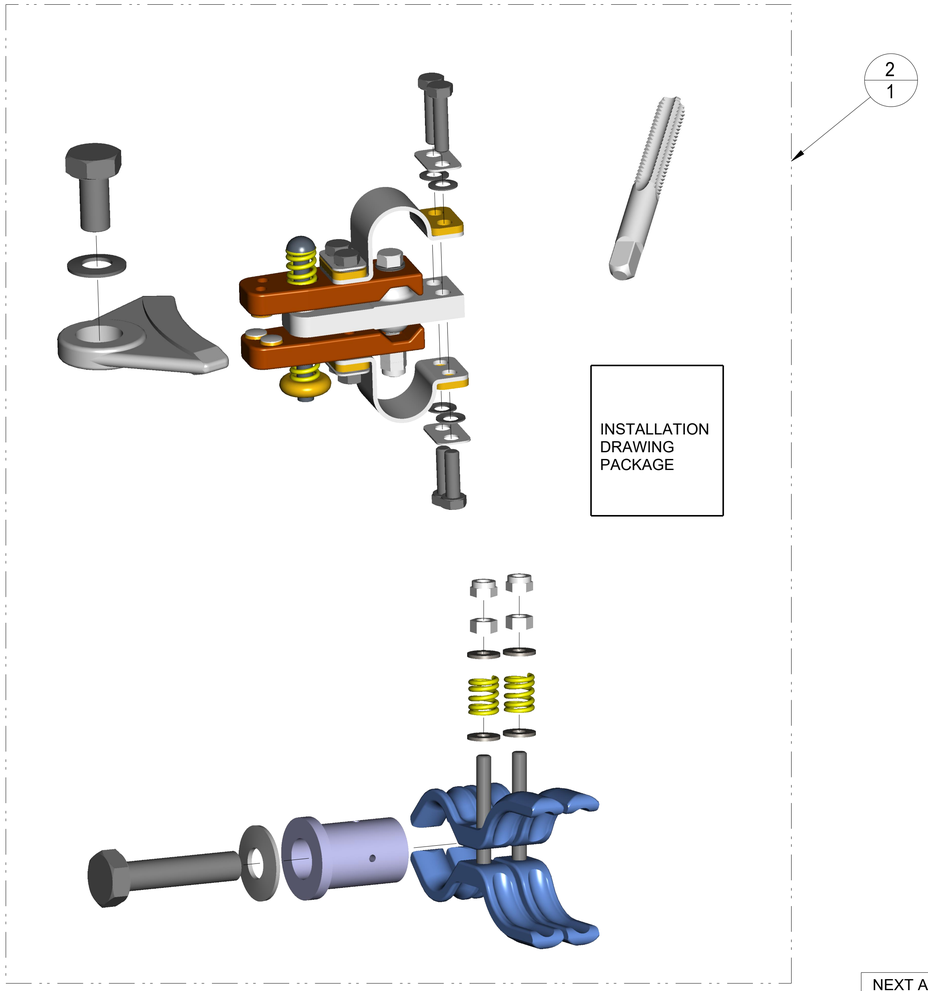

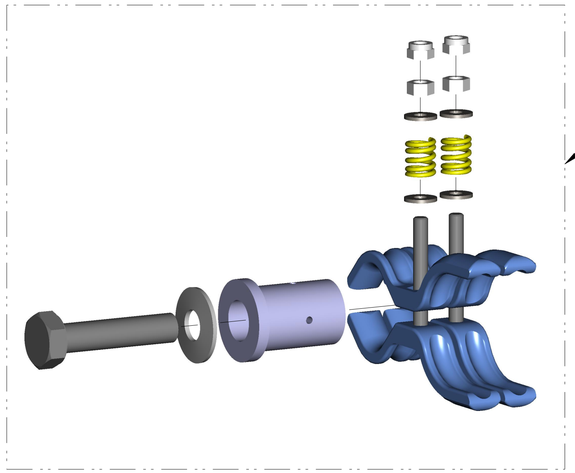

SEE SHEET 2 FOR CONTINUE B.O.M.

QTY		PARTS LIST		
V2	V1	DRAWING NO.	TITLE	ITEM NO.
108	108	8010-198-06	WASHER, LOCK SST M5	7
108	108	8010-099-509	SCREW, SHD STEEL, M5 X .8 X 16 LG	6
12	54	1030-052P	CONTACT ASSEMBLY, STATIONARY	5
3	3	1030-025K	KIT - MAIN SLIP CONTACT (BOWTIE)	4
1	1	1030-042K	KIT - BRAKE ROLLER	3
1	1	1030-017K	KIT - REVERSE SWITCH UPGRADE	2
3	3	1030-027K-OEM	KIT - MAIN CONT. ARM W ROLLER (PER PHASE)	1

SOURCE: (M/P): P
HVS MATERIAL CODE:
QTY. OF MATERIAL:

© Prolec-GE Waukesha, Inc. All rights reserved.

UNLESS OTHERWISE SPECIFIED
DIMENSIONS ARE IN INCHES
TOLERANCE ARE
FRACTIONS DECIMALS ANGLES
.XX ± .01 X° ± 1°
.XXX ± .005
DO NOT SCALE DRAWING

DRC / ECR NUMBER:

APPROVALS	DATE
DRAWN T.LY	11/19/13
CHECKED	
QC	

MATERIAL ANALYSIS NUMBER:
DATE ANALYSIS PERFORMED:

waukesha
9011 GOVERNORS ROW DALLAS, TEXAS 75247

TITLE: KIT - UZD CONTACT

SIZE	SCALE	DWG. NO.	REV.
D	1.000	1030-021K	U

MATERIAL: SEE PARTS LIST
SHEET: 1 of 2

NEXT ASSY
1030-1756

COMPANY AND PROPRIETARY: The Drawing contains proprietary information of SPX Transformer Solutions, Inc. and may not be disclosed, copied, modified or distributed without prior written consent of SPX Transformer Solutions, Inc. Unauthorized use of the information in this Drawing is prohibited. By receipt of this Drawing, SPX Transformer Solutions, Inc. has granted you a limited license to use the Drawing and the information it contains for purposes specified by SPX Transformer Solutions, Inc. Disclosure, copying, modification or use not authorized by SPX Transformer Solutions, Inc. can constitute a violation of applicable law and be subject to severe penalties.

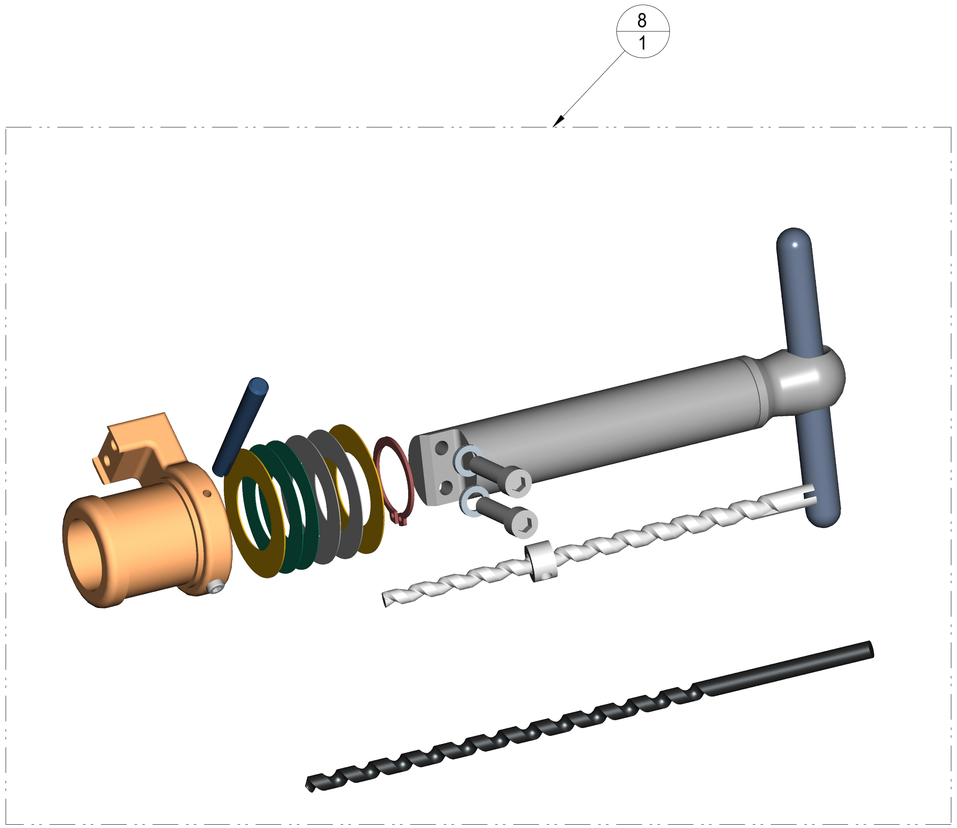

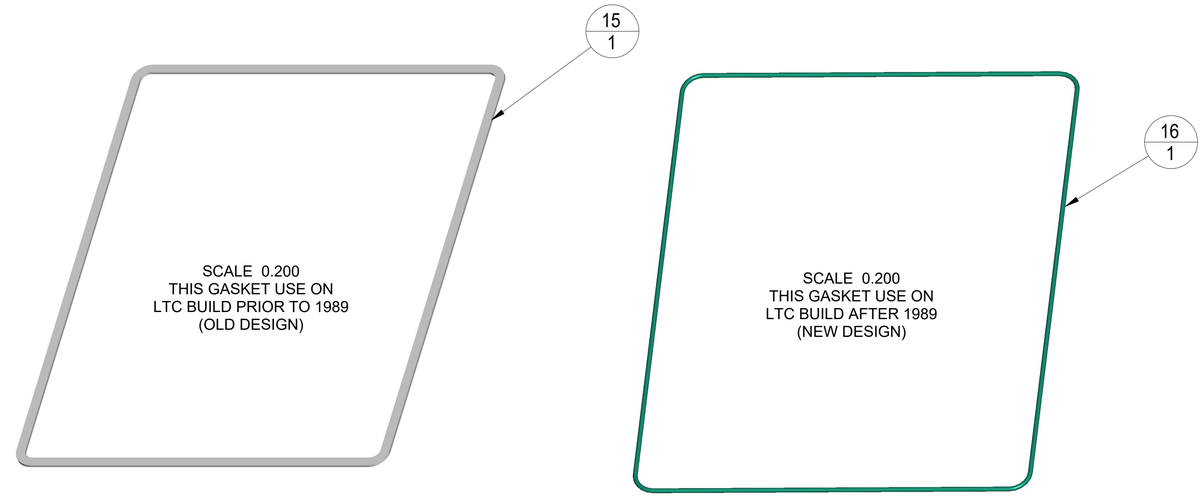

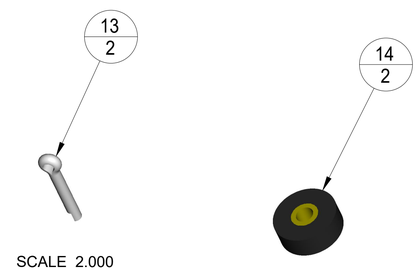

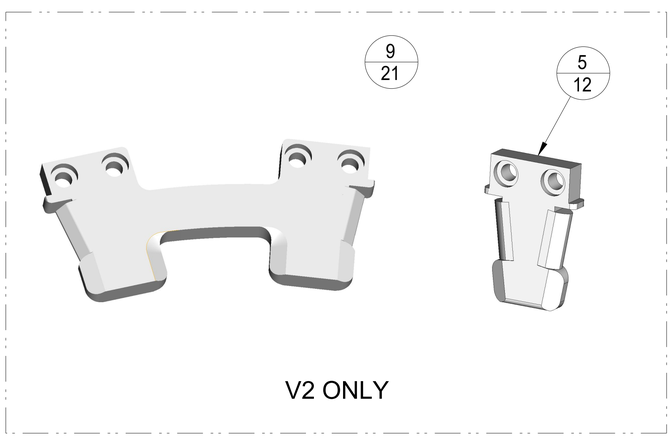

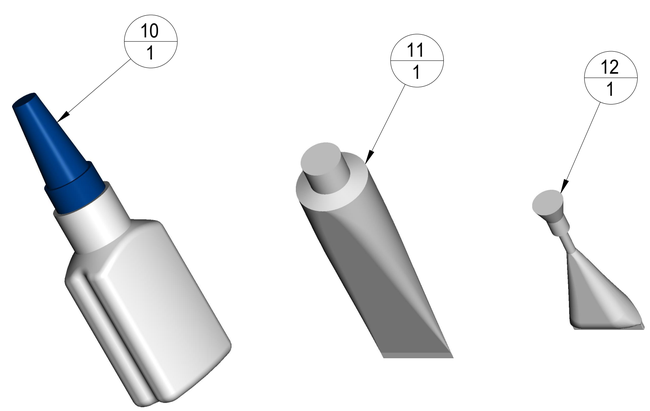

QTY		PARTS LIST		
V2	V1	DRAWING NO.	TITLE	ITEM NO.
1	1	1030-461	TANK DOOR GASKET (NEW DESIGN)	16
1	1	1030-475	TANK DOOR GASKET (OLD DESIGN)	15
2	2	1030-470	ROLLER ASSEMBLY	14
2	2	8010-200-103	PIN, COTTER SST, M2 X 12LG	13
1	1	1030-460	LOCTITE 271	12
1	1	1030-472	GREASE	11
1	1	1030-375	GLUE (LOCKTITE 422)	10
21	-	1030-1754P	CONTACT, DUAL STATIONARY	9
1	1	1030-1730K-V2	REVERSING CONTACT ARM SUBASSEMBLY	8

KIT - UZD CONTACT

SIZE	SCALE	DWG. NO.	REV.
D	1.000	1030-021K	U
MATERIAL: SEE PARTS LIST		SHEET: 2 of 2	

EQUIPMENT TYPE / NO.	DWG. NO.	SH	REV.
WAUKESHA UZD & ABB UZF	1030-023K	1	G1

REVISIONS

REV	DESCRIPTION	DATE	APPROVAL	
F	1. REDRAWN ON PRO/E DATA BASE PER ECR # 140214B	2/18/14	TL	JP
G	1. REMOVE GASKETS AND ADDED REF. NOTE PER ECR # 140324A	3/24/14	TL	JP
G1	1. REMOVE V1 AND V2 IN BOM 2. CHANGE BALLOONS TO SPLIT QTY. 3. CHANGES TEXT SIZE, LARGER PER ECR #170120B	1/20/17	TL	JP

NOTES:

1. FOR UZD GASKETS SEE DRAWING 1030-1732K.

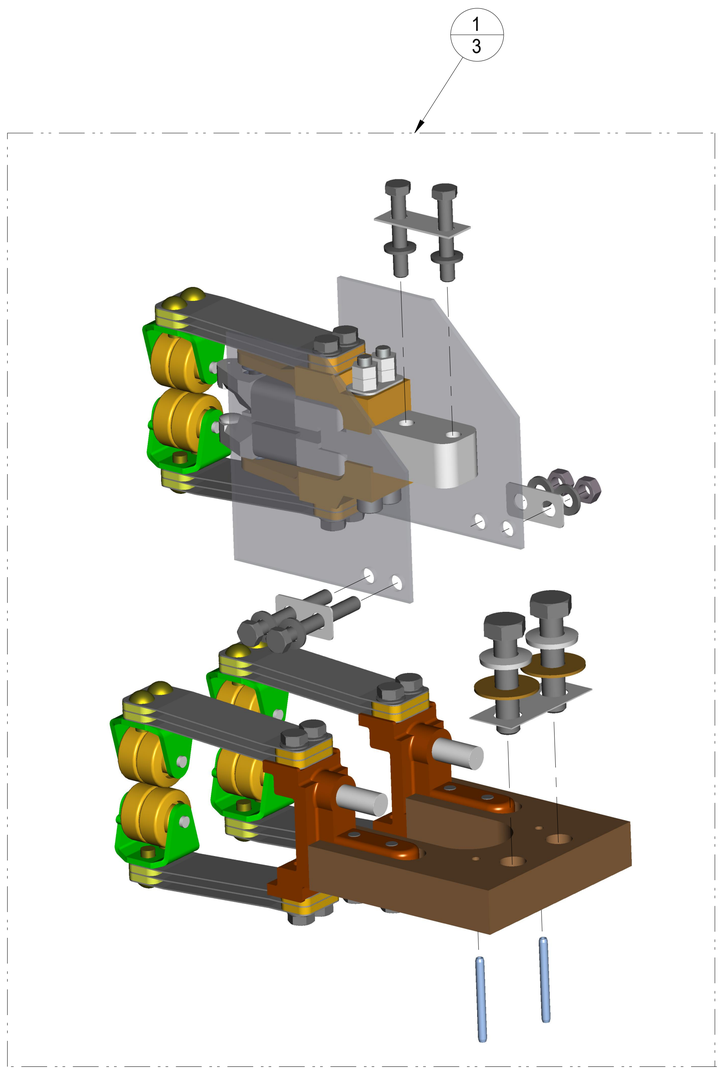

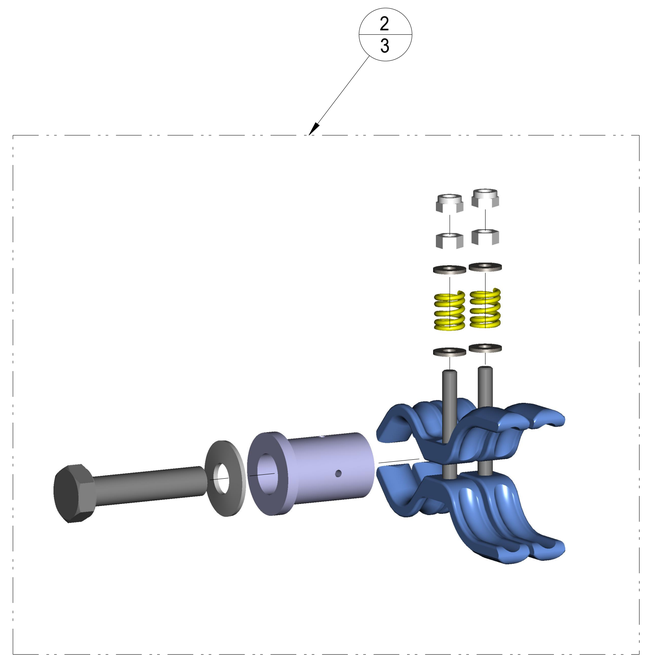

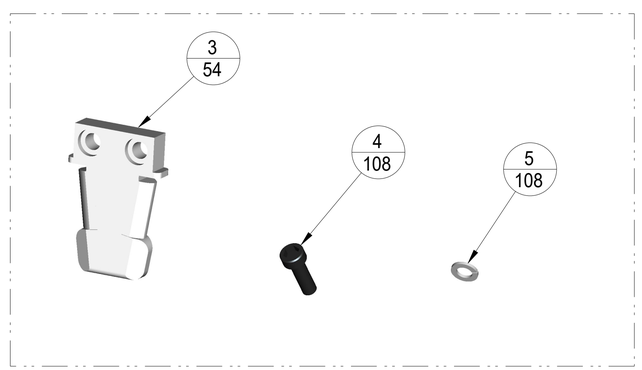

QTY	DRAWING NO.	TITLE	ITEM NO.
108	8010-198-06	WASHER, LOCK, SS. M5	5
108	8010-099-509	SCREW, CAP, SOC. HD ST M5X.8 X 16 LG	4
54	1030-052P	CONTACT ASSEMBLY, STATIONARY	3
3	1030-025K	KIT- MAIN SLIP CONTACT (BOWTIE)	2
3	1030-027K-OEM	KIT-MAIN CONTACT ARM WITH ROLLERS (PER PHASE)	1

PARTS LIST

NEXT ASSY
1030-021K

SOURCE: (M/P) M

HVS MATERIAL CODE:

QTY. OF MATERIAL:

© Prolec-GE Waukesha, Inc. All rights reserved.

UNLESS OTHERWISE SPECIFIED
DIMENSIONS ARE IN INCHES
TOLERANCE ARE
FRACTIONS DECIMALS ANGLES
.XX ± .01 X° ± 1°
.XXX ± .005
DO NOT SCALE DRAWING

DRC / ECR NUMBER:

APPROVALS	DATE
DRAWN T. LY	11/7/13
CHECKED	
QC	

MATERIAL ANALYSIS NUMBER:

DATE ANALYSIS PERFORMED:

COPYRIGHT AND PROPRIETARY: The Drawing contains proprietary information of SPX Transformer Solutions, Inc. and may not be disclosed, copied, modified or used without other written consent. The Drawing is provided to the recipient for its internal use only and remains the property of SPX Transformer Solutions, Inc. SPX Transformer Solutions, Inc. has granted you a limited license to use the Drawing and the information it is only for purposes specified by SPX Transformer Solutions, Inc. Any other use, disclosure, copying, modification or use of the Drawing and information in any other manner is prohibited by SPX Transformer Solutions, Inc. and may result in severe civil and criminal penalties. Disclosure, copying, modification or use not authorized by SPX Transformer Solutions, Inc. can constitute a violation of applicable law and be subject to severe penalties.

waukesha
9011 GOVERNORS ROW DALLAS, TEXAS 75247

TITLE
KIT - SELECTOR SWITCH

SIZE	SCALE	DWG. NO.	REV.
D	1.000	1030-023K	G1

MATERIAL: SEE PARTS LIST

SHEET 1 of 1

EQUIPMENT TYPE / NO.
WAUKESHA UZD

DWG. NO. 1030-024K | SH 1 | REV. C1

REVISIONS

LTR	REVISION	DATE	APPROVAL	
C	1. REDRAWN ON PRO/E DATA BASE PER ECR # 140407B	04/07/14	TL	JP

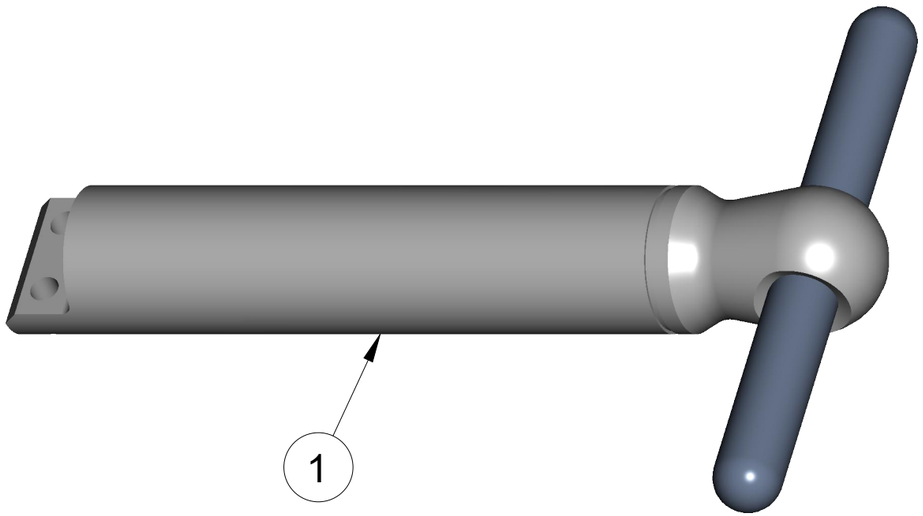

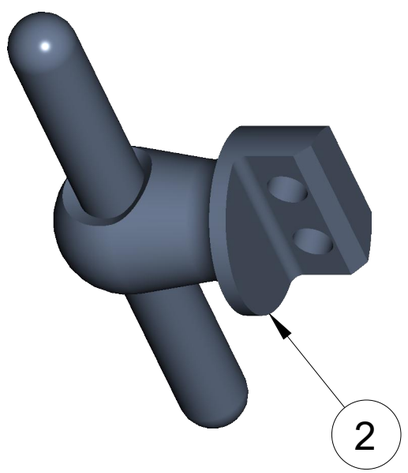

QTY	DRAWING NO.	TITLE	ITEM NO.
3	1030-1785	SHAFT, ASSEMBLY SHORT (LTC-UZD-ASSY, GROUP)	2
3	1030-485	SHAFT, ASSEMBLY LONG	1

PARTS LIST

NEXT ASSY

SOURCE: (M/P) M | HVS MATERIAL CODE: | QTY. OF MATERIAL:

© Prolec-GE Waukesha, Inc. All rights reserved.

UNLESS OTHERWISE SPECIFIED
DIMENSIONS ARE IN INCHES
TOLERANCE ARE
FRACTIONS DECIMALS ANGLES
.XX ± .01 X° ± 1°
.XXX ± .005
DO NOT SCALE DRAWING

DRC / ECR NUMBER:

MATERIAL ANALYSIS NUMBER:

DATE ANALYSIS PERFORMED:

APPROVALS	DATE
DRAWN T. LY	11/13/13
CHECKED	
QC	

waukesha
9011 GOVERNORS ROW DALLAS, TEXAS 75247

TITLE
KIT - TRANSFER STOCK

SIZE	SCALE	DWG. NO.	REV.
B	1.000	1030-024K	C1

MATERIAL: SEE PARTS LIST

SHEET 1 of 1

COMPANY AND PROPRIETARY: This document contains proprietary information of Prolec-GE Waukesha, Inc. ("Waukesha") and may not be disclosed, copied, modified or used without the written permission of Waukesha. If Waukesha has authorized your possession and/or use of this document, Waukesha has granted you a limited, revocable license to use this document and the information in it only for purposes specified by Waukesha. The document must be promptly returned to Waukesha, after its use and/or upon demand by Waukesha. Any possession, disclosure, copying, modification or use not authorized by Waukesha, can constitute a violation of applicable law and be subject to severe penalties.
©2022 Prolec-GE Waukesha, Inc. All Rights Reserved.

EQUIPMENT TYPE / NO.	DWG. NO.	SH	REV.
WAUKESHA UZD	1030-025K	1	H

NOTES:
1. SEAL ALL PARTS IN A PLASTIC BAG.

2. ONE KIT PER PHASE.

3. WAUKESHA UZD P/N-0970601R0025, SAP P/N-2044582.

REVISIONS

LTR	REVISION	DATE	APPROVAL	
F	1. REDRAWN ON PRO/E DATA BASE PER ECR # 140127B	10/16/13	TL	JP
G	1. CHANGE WASHER FROM:8010-068-63 TO: 8010-166-21. 2. CHANGE WAU. FROM: P/N 097061R0025 TO: 0970601R0025. 3. ADDED SAP NO. 2044582. PER ECR #170427C	4/26/17	TL	JP
H	1. ITEM # 6 WAS 8010-166-21 PER ECR # 170517B	05/18/17	SK	JP

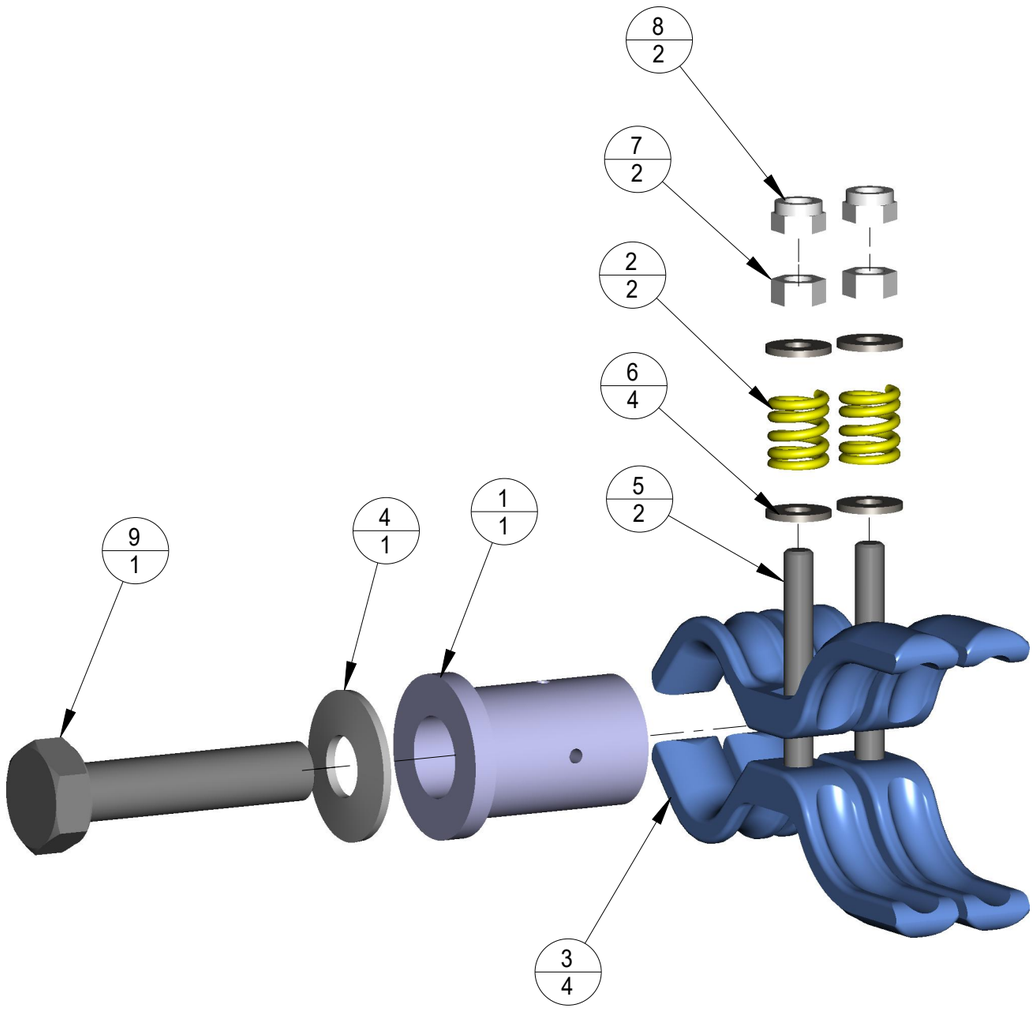

QTY	DRAWING NO.	TITLE	ITEM NO.
1	8010-199-817	SCREW, HEX M10X1.5-6gX45LG SS	9
2	8010-193-06	NUT, LOCKING, NYLON INSERT S.S. M5X.8	8
2	8010-188-06	NUT, PLAIN HEX M5X.8	7
4	8010-166-03	WASHER, FLAT SST #10	6
2	8010-115-516	SCREW, HEX HEAD METRIC M5X.8X40 LG, CAD-ZN ST	5
1	1030-476	WASHER, CONE DISC	4
4	1030-232P	CONTACT BAR	3
2	1030-071	COMPRESSION, SPRING	2
1	1030-065P	CONTACT TUBE	1

PARTS LIST

NEXT ASSY
1030-017K
1030-021K
1030-023K

SOURCE: (M/P) M | HVS MATERIAL CODE: | QTY. OF MATERIAL:

© Prolec-GE Waukesha, Inc. All rights reserved.

UNLESS OTHERWISE SPECIFIED
DIMENSIONS ARE IN INCHES
TOLERANCE ARE
FRACTIONS DECIMALS ANGLES
.XX ± .01 X° ± 1°
.XXX ± .005
DO NOT SCALE DRAWING

DRC / ECR NUMBER:

MATERIAL ANALYSIS NUMBER:

DATE ANALYSIS PERFORMED:

APPROVALS	DATE
DRAWN T. LY	10/16/13
CHECKED	
QC	

waukesha
9011 GOVERNORS ROW DALLAS, TEXAS 75247

TITLE
KIT- MAIN SLIP CONTACT (BOWTIE)

SIZE	SCALE	DWG. NO.	REV.
B	1.000	1030-025K	H

MATERIAL: SEE PARTS LIST

SHEET 1 of 1

COMPANY AND PROPRIETARY: This document contains proprietary information of Prolec-GE Waukesha, Inc. ("Waukesha") and may not be disclosed, copied, modified or used without the written permission of Waukesha. If Waukesha has authorized your possession and/or use of this document, Waukesha has granted you a limited, revocable license to use this document and the information in it only for purposes specified by Waukesha. The document must be promptly returned to Waukesha, after its use and/or upon demand by Waukesha. Any possession, disclosure, copying, modification or use not authorized by Waukesha, can constitute a violation of applicable law and be subject to severe penalties.
©2022 Prolec-GE Waukesha, Inc. All Rights Reserved.

EQUIPMENT TYPE / NO.	DWG. NO.	SH	REV.
WAUKESHA UZD, ABB UZE & ABB UZF	1030-026K	1	A

NOTES:
1. WUAKESHA P/N - 0765500R0002.

REVISIONS

LTR	REVISION	DATE	APPROVAL	
A	1. REDRAWN ON PRO/E DATA BASE PER ECR # 140213C	11/4/13	TL	JP

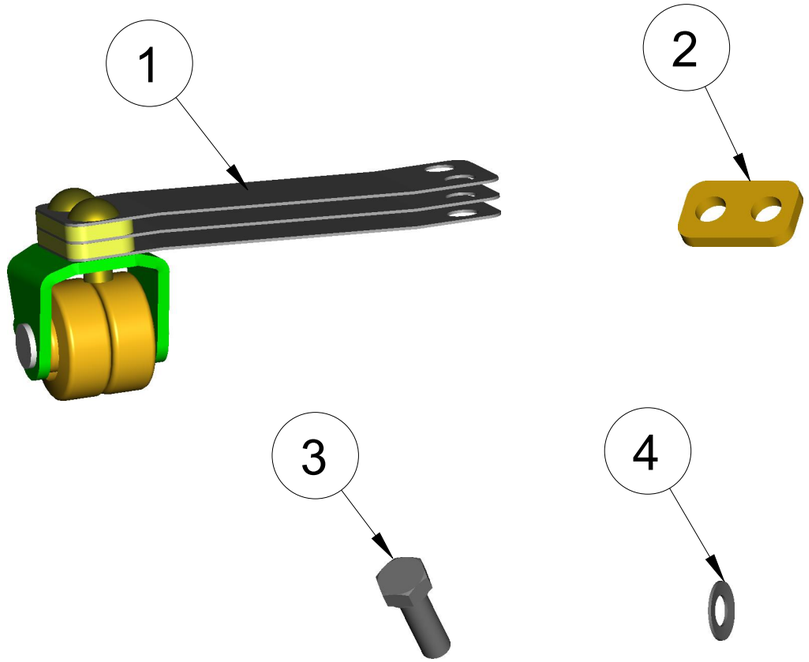

QTY	DRAWING NO.	TITLE	ITEM NO.
12	8010-101-24	WASHER, BELLEVILLE	4
12	8010-115-509	SCREW, HEX. HD. M5-8 X 16 LG	3
12	1030-222	2-HOLES WASHER	2
6	1030-217	ROLLER ASSEMBLY	1

PARTS LIST

NEXT ASSY
1030-027K-OEM

SOURCE: (M/P) M

HVS MATERIAL CODE:

QTY. OF MATERIAL:

© Prolec-GE Waukesha, Inc. All rights reserved.

UNLESS OTHERWISE SPECIFIED
DIMENSIONS ARE IN INCHES
TOLERANCE ARE
FRACTIONS DECIMALS ANGLES
.XX ± .01 X° ± 1°
.XXX ± .005
DO NOT SCALE DRAWING

DRC / ECR NUMBER:

MATERIAL ANALYSIS NUMBER:

DATE ANALYSIS PERFORMED:

APPROVALS		DATE
DRAWN	T. LY	10/31/13
CHECKED		
QC		

waukesha
9011 GOVERNORS ROW DALLAS, TEXAS 75247

TITLE
KIT - MAIN BREAKING CONTACT (PER PHASE)

SIZE	SCALE	DWG. NO.	REV.
B	1.000	1030-026K	A

MATERIAL: SEE PARTS LIST

SHEET 1 of 1

COMPANY AND PROPRIETARY: This document contains proprietary information of Prolec-GE Waukesha, Inc. ("Waukesha") and may not be disclosed, copied, modified or used without the written permission of Waukesha. If Waukesha has authorized your possession and/or use of this document, Waukesha has granted you a limited, revocable license to use this document and the information in it only for purposes specified by Waukesha. The document must be promptly returned to Waukesha, after its use and/or upon demand by Waukesha. Any possession, disclosure, copying, modification or use not authorized by Waukesha, can constitute a violation of applicable law and be subject to severe penalties.
©2022 Prolec-GE Waukesha, Inc. All Rights Reserved.

EQUIPMENT TYPE / NO.	DWG. NO.	SH	REV.
WAUKESHA UZD & ABB UZF	1030-027K-OEM	1	J1

NOTES:
1. WAUKESHA P/N - 0550012R1044.
   SAP P/N - 2039529.

2 PLACE ALL HARDWARE IN A PLASTIC BAG.

3 PLACE THIS ITEM IN A SEPARATE PLASTIC BAG.

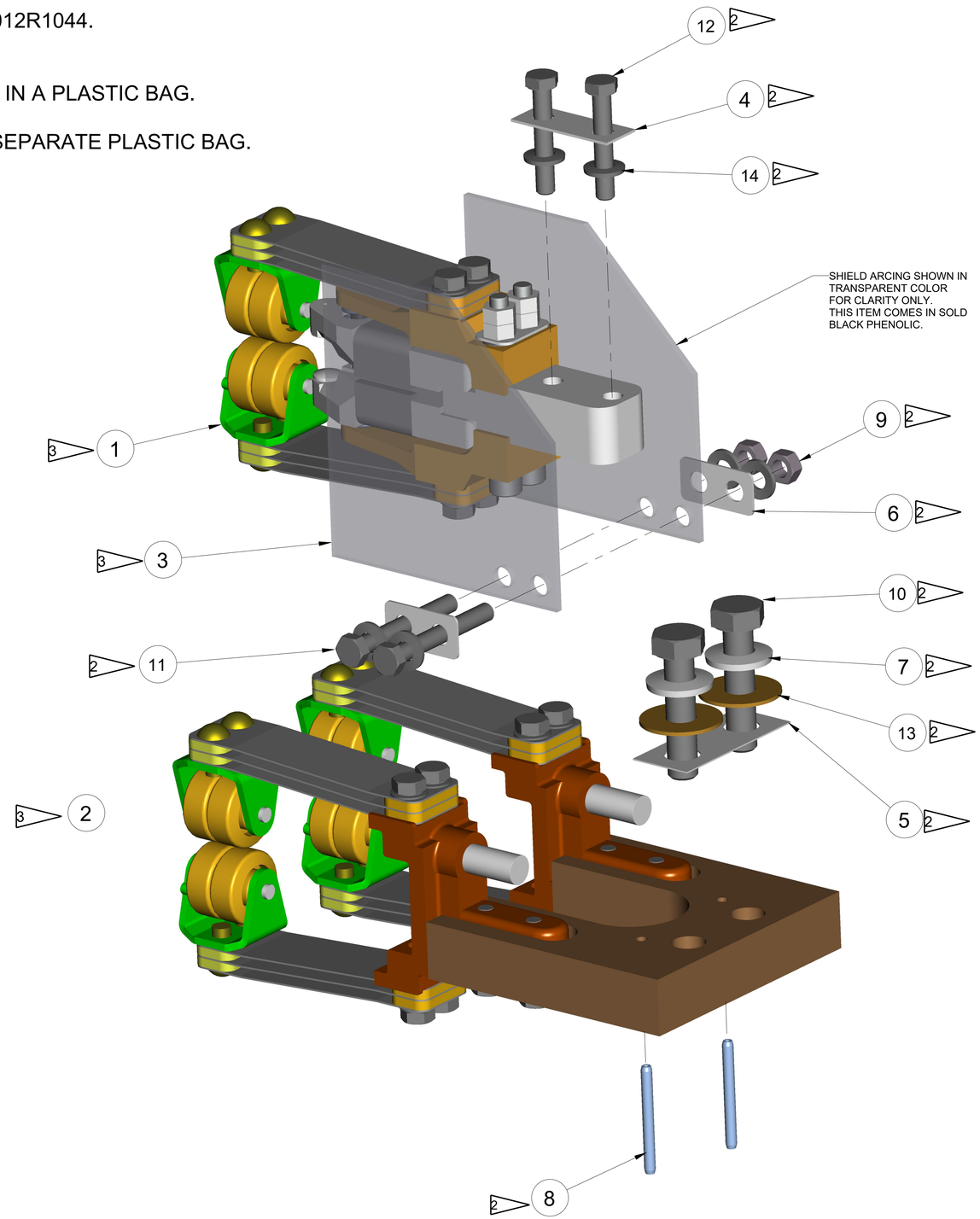

REVISIONS

REV	DESCRIPTION	DATE	APPROVAL	
J	1. REDRAWN ON PRO/E DATA BASE PER ECR # 140211A	11/7/13	TL	JP
J1	1. ADDED SAP # TO NOTE 1. PER ECR # 150326B	3/26/15	TL	JP

QTY	DRAWING NO.	TITLE	ITEM NO.
6	8010-101-19	WASHER, BELLEVILLE M5	14
2	8010-069-20	WASHER, FLAT M8	13
2	8010-115-514	BOLT, HEX HD. M5 X 0.8 X 30 LG	12
2	8010-115-516	BOLT, HEX HD. M5 X 0.8 X 40 LG	11
2	8010-115-715	BOLT, HEX HD. M8 X 1.25 X 35 LG	10
2	8010-100-06	NUT, HEX PLAIN M5 X 0.8	9
2	8010-168-113	PIN, SPRING 3 DIA X 30 LG	8
2	1030-206	WASHER, BELLEVILLE	7
2	1030-208	TAB, LOCKING, SST	6
1	1030-205	TAB, LOCKING, SST	5
1	1030-210	TAB, LOCKING, SST	4
2	1030-209	SHIELD, ARCING	3
1	1030-459	CONTACT ASSEMBLY, RESISTOR	2
1	1030-214P	CONTACT ARM ASSEMBLY	1

PARTS LIST

NEXT ASSY
1030-021K
1030-023K
1030-021K-COMED

SOURCE: (M/P) M
HVS MATERIAL CODE:
QTY. OF MATERIAL:

UNLESS OTHERWISE SPECIFIED DIMENSIONS ARE IN INCHES
TOLERANCE ARE
FRACTIONS DECIMALS ANGLES
.XX ± .01 X° ± 1°
.XXX ± .005
DO NOT SCALE DRAWING

MATERIAL ANALYSIS NUMBER:
DATE ANALYSIS PERFORMED:

DRC / ECR NUMBER:

APPROVALS	DATE
DRAWN T. LY	11/7/13
CHECKED	
QC	

© Prolec-GE Waukesha, Inc. All rights reserved.

waukesha
9011 GOVERNORS ROW DALLAS, TEXAS 75247

TITLE
KIT - MAIN CONTACT ARM
WITH ROLLERS (PER PHASE)

SIZE	SCALE	DWG. NO	REV
D	1.500	1030-027K-OEM	J1

MATERIAL: SEE PARTS LIST
SHEET: 1 of 1

COMPANY AND PROPRIETARY: The Drawing contains proprietary information of SPX Transformer Solutions, Inc. and may not be disclosed, copied, modified or used without the written permission of SPX Transformer Solutions, Inc. If SPX Transformer Solutions, Inc. has authorized your permission and/or use of this Drawing, the Drawing must be promptly returned to SPX Transformer Solutions, Inc. upon completion of the authorized use. Unauthorized use of the Drawing is prohibited by law. The Drawing must be promptly returned to SPX Transformer Solutions, Inc. or destroyed after its use and/or upon demand by SPX Transformer Solutions, Inc. Any Possession, Disclosure, Copying, Modification or use not authorized by SPX Transformer Solutions, Inc. can constitute a violation of applicable law and be subject to severe penalties.

EQUIPMENT TYPE / NO.	DWG. NO.	SH	REV.
WAUKESHA UZD	1030-029K	1	C

REVISIONS

LTR	REVISION	DATE	APPROVAL	
C	1. REDRAWN ON PRO/E DATA BASE PER ECR #140328B	4/2/14	TL	JP

NOTES:
1. WAUKESHA P/N: SAP 2059792 (055012R1022).
2. SEAL ALL COMPONENTS IN PLASTIC BAG.
3. ASSEMBLY SHOWN FOR REFERENCE ONLY ALL COMPONENTS SHIP NOT ASSEMBLE AND IN PLASTIC BAG.

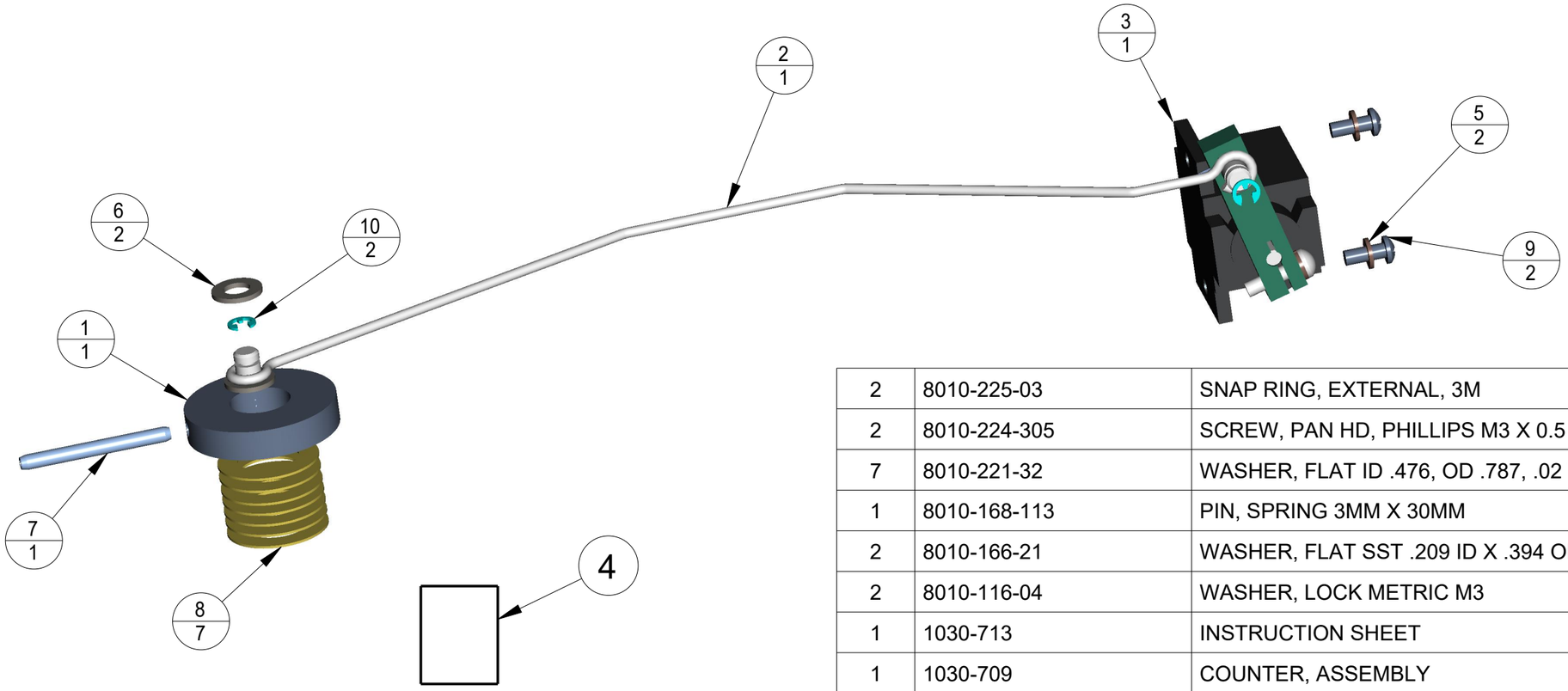

QTY	DRAWING NO.	TITLE	ITEM NO.
2	8010-225-03	SNAP RING, EXTERNAL, 3M	10
2	8010-224-305	SCREW, PAN HD, PHILLIPS M3 X 0.5 X 8 LG	9
7	8010-221-32	WASHER, FLAT ID .476, OD .787, .02 THK	8
1	8010-168-113	PIN, SPRING 3MM X 30MM	7
2	8010-166-21	WASHER, FLAT SST .209 ID X .394 OD X .039 THK	6
2	8010-116-04	WASHER, LOCK METRIC M3	5
1	1030-713	INSTRUCTION SHEET	4
1	1030-709	COUNTER, ASSEMBLY	3
1	1030-708	CONNECTING, ARM	2
1	1030-705	DRIVE DISC., COUNTER ASSEMBLY	1

PARTS LIST

NEXT ASSY

SOURCE: (M/P) M

HVS MATERIAL CODE:

QTY. OF MATERIAL:

© Prolec-GE Waukesha, Inc. All rights reserved.

UNLESS OTHERWISE SPECIFIED DIMENSIONS ARE IN INCHES TOLERANCE ARE
FRACTIONS DECIMALS ANGLES
.XX ± .01 X° ± 1°
.XXX ± .005
DO NOT SCALE DRAWING

DRC / ECR NUMBER:

APPROVALS	DATE
DRAWN T. LY	4/2/14
CHECKED	
QC	

MATERIAL ANALYSIS NUMBER:

DATE ANALYSIS PERFORMED:

waukesha
9011 GOVERNORS ROW DALLAS, TEXAS 75247

TITLE
KIT- COUNTER ASSEMBLY

SIZE	SCALE	DWG. NO.	REV.
B	1.000	1030-029K	C

MATERIAL: SEE PARTS LIST

SHEET 1 of 1

COMPANY AND PROPRIETARY: This document contains proprietary information of Prolec-GE Waukesha, Inc. ("Waukesha") and may not be disclosed, copied, modified or used without the written permission of Waukesha. If Waukesha has authorized your possession and/or use of this document, Waukesha has granted you a limited, revocable license to use this document and the information in it only for purposes specified by Waukesha. The document must be promptly returned to Waukesha, after its use and/or upon demand by Waukesha. Any possession, disclosure, copying, modification or use not authorized by Waukesha, can constitute a violation of applicable law and be subject to severe penalties.
©2022 Prolec-GE Waukesha, Inc. All Rights Reserved.

EQUIPMENT TYPE / NO.

WAUAKESHA UZD

DWG. NO.	SH	REV.
1030-031K	1	D1

NOTES:
1. WAUKESHA P/N - 0550012R1145.

REVISIONS

LTR	REVISION	DATE	APPROVAL	
D1	1) REDRAWN IN PRO-E DATA BASE PER ECR# 150521A	05-20-15	TA	JP

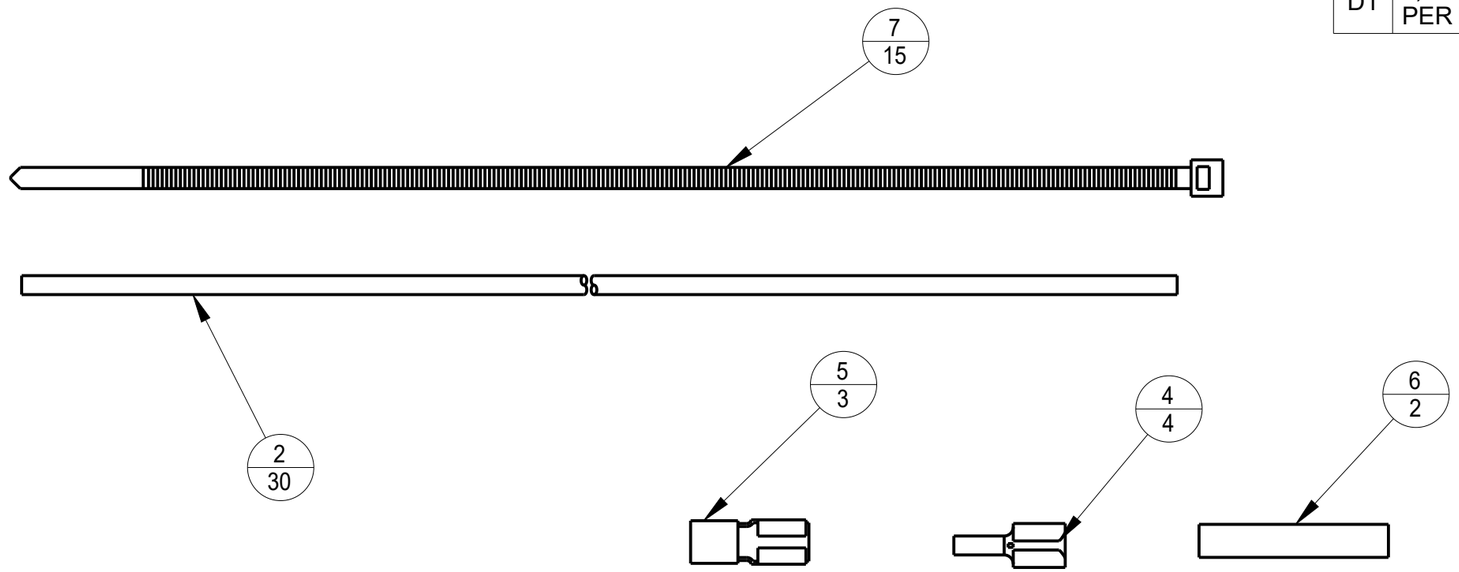

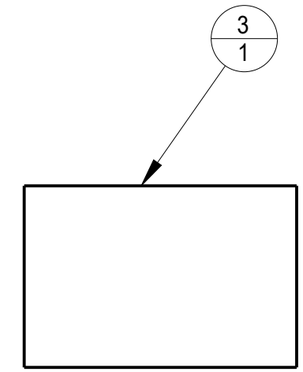

WIRING DIAGRAM

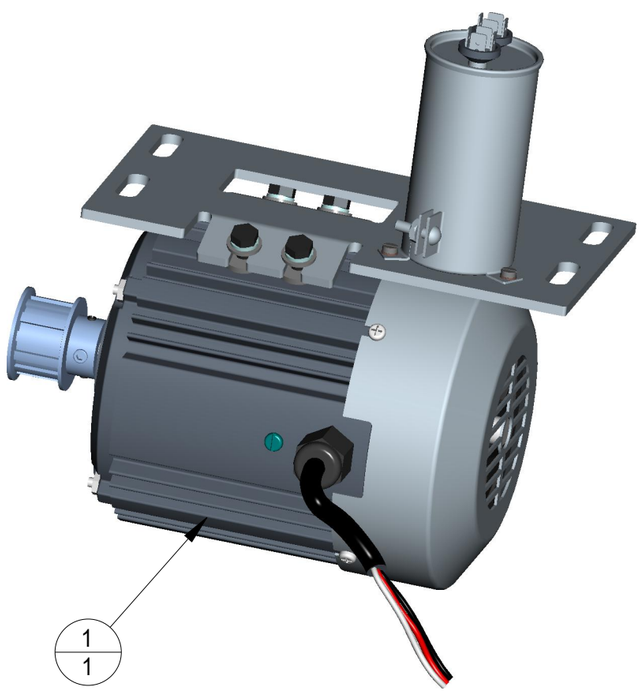

QTY	DRAWING NO.	TITLE	ITEM NO.
15	8010-150-04	TIE, CABLE, NATURAL-COLOR, NYLON, .13W X 8.0 LNG	7
2	8010-235-01	BUTT SPLICE, STEP ASSY, #16-14 TO #22-18	6
3	8010-156-01	TERMINAL, QUICK DISC., INS. #16-14 AWG	5
4	8010-236-01	SPADE TERMINAL, NON-INSULATED #22-#18	4
1	1030-787	WIRING DIAGRAM	3
1	1030-722	WIRE (30 INCHES)	2
1	1030-718	MOTOR ASSEMBLY	1

PARTS LIST

NEXT ASSY
-
-
-
-
-
-

SOURCE: (M/P)	HVS MATERIAL CODE:	QTY. OF MATERIAL:
M	-	-

© Prolec-GE Waukesha, Inc. All rights reserved.

UNLESS OTHERWISE SPECIFIED DIMENSIONS ARE IN INCHES
TOLERANCE ARE
FRACTIONS DECIMALS ANGLES
.XX ± .01 X° ± 1°
.XXX ± .005
DO NOT SCALE DRAWING

DRC / ECR NUMBER: -

MATERIAL ANALYSIS NUMBER:

DATE ANALYSIS PERFORMED:

APPROVALS		DATE
DRAWN	TIM A	03-27-15
CHECKED	T. LY	03-27-15
QC	-	-

waukesha
9011 GOVERNORS ROW DALLAS, TEXAS 75247

TITLE
KIT-BODINE MOTOR REPLACEMENT

SIZE	SCALE	DWG. NO.	REV.
B	0.375	1030-031K	D1

MATERIAL: SEE PARTS LIST

SHEET 1 of 1

COMPANY AND PROPRIETARY: This document contains proprietary information of Prolec-GE Waukesha, Inc. ("Waukesha") and may not be disclosed, copied, modified or used without the written permission of Waukesha. If Waukesha has authorized your possession and/or use of this document, Waukesha has granted you a limited, revocable license to use this document and the information in it only for purposes specified by Waukesha. The document must be promptly returned to Waukesha, after its use and/or upon demand by Waukesha. Any possession, disclosure, copying, modification or use not authorized by Waukesha, can constitute a violation of applicable law and be subject to severe penalties.
©2022 Prolec-GE Waukesha, Inc. All Rights Reserved.

EQUIPMENT TYPE / NO.	DWG. NO.	SH	REV.
WAUKESHA UZD	1030-036K	1	J

NOTES:
1. REMOVE SUPPLIER PACKAGING AND PUT IN PLASTIC BAG. INVENTORY DISCRETION.

REVISIONS				
REV	DESCRIPTION	DATE	APPROVAL	
G1	1. REDRAWN IN PRO/E DATA BASE PER ECR #150612D	6/1/15	TL	JP
G2	1. ADDED LINK TO FOAM KIT PER ECR #190223A	2/22/19	TL	JP
G3	1. UP-DATE NOTES PER ECR#201030A	10/30/20	TL	JP
G4	MODIFIED DESCRIPTIONS TO ADD MORE DETAIL PER ECR #	02/04/21	AG	JP
H	ADDED ITEM 20, 1030-2193, AND ITEM 21, 1030-2194 TO THE BOM PER ECR #220705D	7/5/22	MS	JP
J	ADDED ITEM 1030-2216 TO KIT PER ECR #230907A	09/07/23	SM	JP

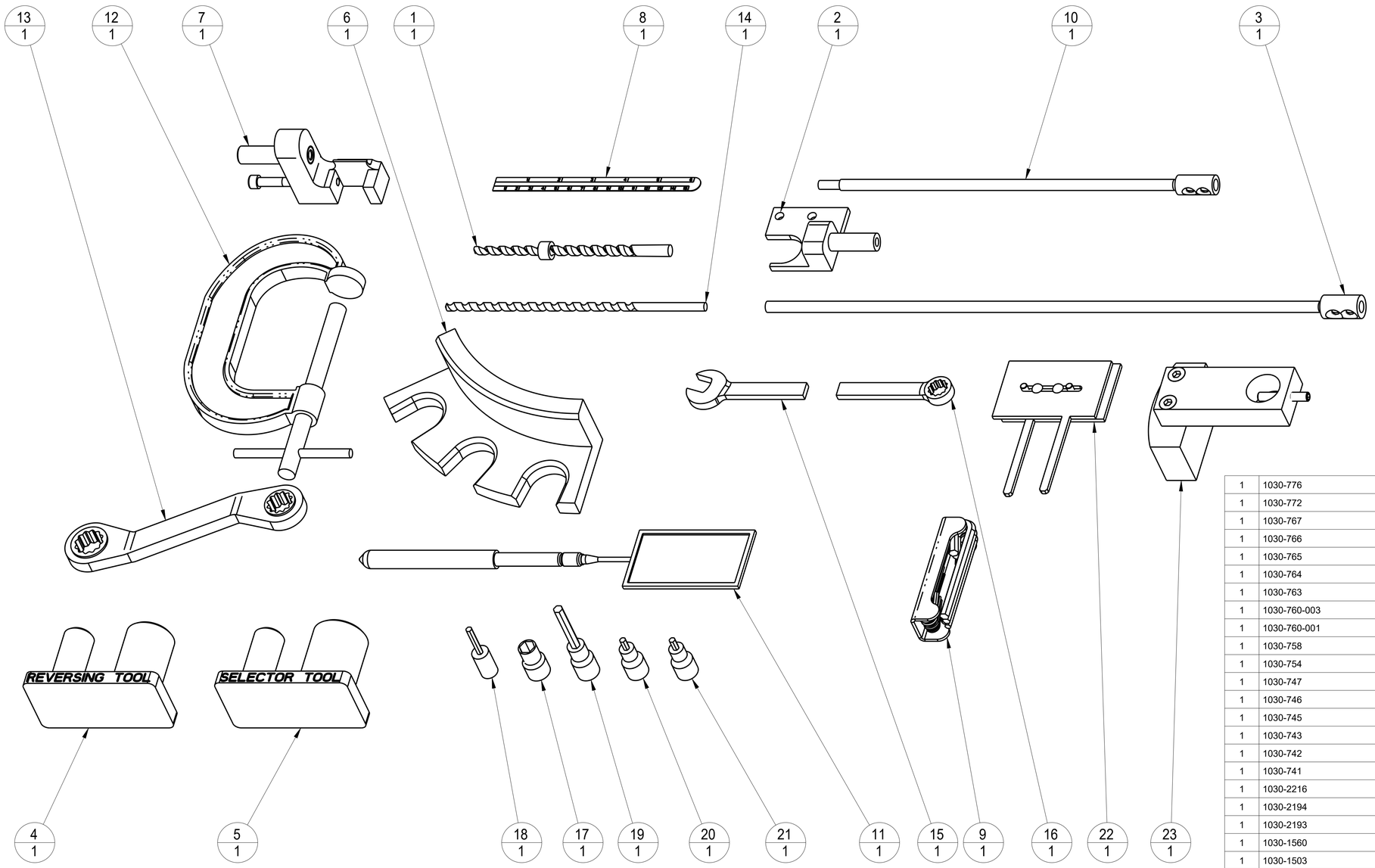

QTY	DRAWING NO.	TITLE	ITEM NO.
1	1030-776	ALIGNMENT TOOL FOR STAT. REV. SW. CONTACT	23
1	1030-772	GAGE, CONTACT ROLLER ASSEMBLY	22
1	1030-767	3/8" DRIVE, HEX DRIVER SOCKET 4MM	21
1	1030-766	3/8" DRIVE, HEX DRIVER SOCKET 6MM	20
1	1030-765	3/8" DRIVE, HEX DRIVER SOCKET 5MM	19
1	1030-764	1/4" DRIVE, HEX DRIVER SOCKET 4MM	18
1	1030-763	MODIFIED 3/8" DRIVE SOCKET 10MM	17
1	1030-760-003	MODIFIED WRENCH, BOX END	16
1	1030-760-001	MODIFIED WRENCH, OPEN END	15
1	1030-758	DRILL BIT HSS 6.0 X 200 MM	14
1	1030-754	RATCHETING BOX END WRENCH W/25° OFFSET 15MM & 17MM	13
1	1030-747	MODIFIED C-CLAMP ASSEMBLY	12
1	1030-746	EXTENDABLE MIRROR	11
1	1030-745	1/4" DRILL EXTENSION	10
1	1030-743	HEX WRENCH	9
1	1030-742	STEEL SCALE	8
1	1030-741	DRILL TOOL BLOCK ASSY. REV SW SHAFT	7
1	1030-2216	TOOL,ALIGNMENT,UZD,STATIONARY CONTACT HOLDER	6
1	1030-2194	BOW-TIE ASSEMBLY TOOL, SELECTOR SWITCH	5
1	1030-2193	BOW-TIE ASSEMBLY TOOL, REVERSING SWITCH	4
1	1030-1560	5/16" DRILL EXTENSION	3
1	1030-1503	DRILL ALIGNMENT TOOL FOR SELECTOR SW SHAFT	2
1	1030-1125	TAPERED REAMER WITH SHAFT COLLAR	1

PARTS LIST

NEXT ASSY
1030-2054

SOURCE: (M/P) M

HVS MATERIAL CODE:

QTY. OF MATERIAL:

© Prolec-GE Waukesha, Inc. All rights reserved.

UNLESS OTHERWISE SPECIFIED DIMENSIONS ARE IN INCHES
TOLERANCE ARE
FRACTIONS DECIMALS ANGLES
.XX ± .01 X° ± 1°
.XXX ± .005
DO NOT SCALE DRAWING

MATERIAL ANALYSIS NUMBER:

DATE ANALYSIS PERFORMED:

DRC / ECR NUMBER:

APPROVALS	DATE
DRAWN T. LY	6/1/15
CHECKED A. GAYTAN	02/04/21
QC	

waukesha
9011 GOVERNORS ROW DALLAS, TEXAS 75247

TITLE KIT- UZD TOOLS

SIZE	SCALE	DWG. NO.	REV.
D	NONE	1030-036K	J

MATERIAL SEE PARTS LIST

SHEET 1 of 1

COMPANY AND PROPRIETARY: This document contains proprietary information of Prolec-GE Waukesha, Inc. ("Waukesha") and may not be disclosed, copied, modified or used without the written permission of Waukesha. If Waukesha has authorized your possession and/or use of this document, Waukesha has granted you a limited, revocable license to use this document solely for the purpose for which it was delivered to you by Waukesha. Your possession and/or use of this document constitutes your acceptance of these terms. Any other possession, disclosure, copying, modification or use not authorized by Waukesha, can constitute a violation of applicable law and be subject to severe penalties.
©2022 Prolec-GE Waukesha, Inc. All Rights Reserved.

EQUIPMENT TYPE / NO.

WAUKESHA UZD

DWG. NO. 1030-042K | SH 1 | REV. B

REVISIONS

LTR	REVISION	DATE	APPROVAL	
A	1. REDRAWN ON PRO/E DATA BASE PER ECR # 140221B	3/10/14	TL	JP
B	1. CHANGE THE ASSY # FROM 2030-021K-COMED TO 1030-021K-COMED IN NEXT ASSY BOX. 2. ADD ASSY # 1030-21K PER ECR # 140429A	8/29/14	SK	JP

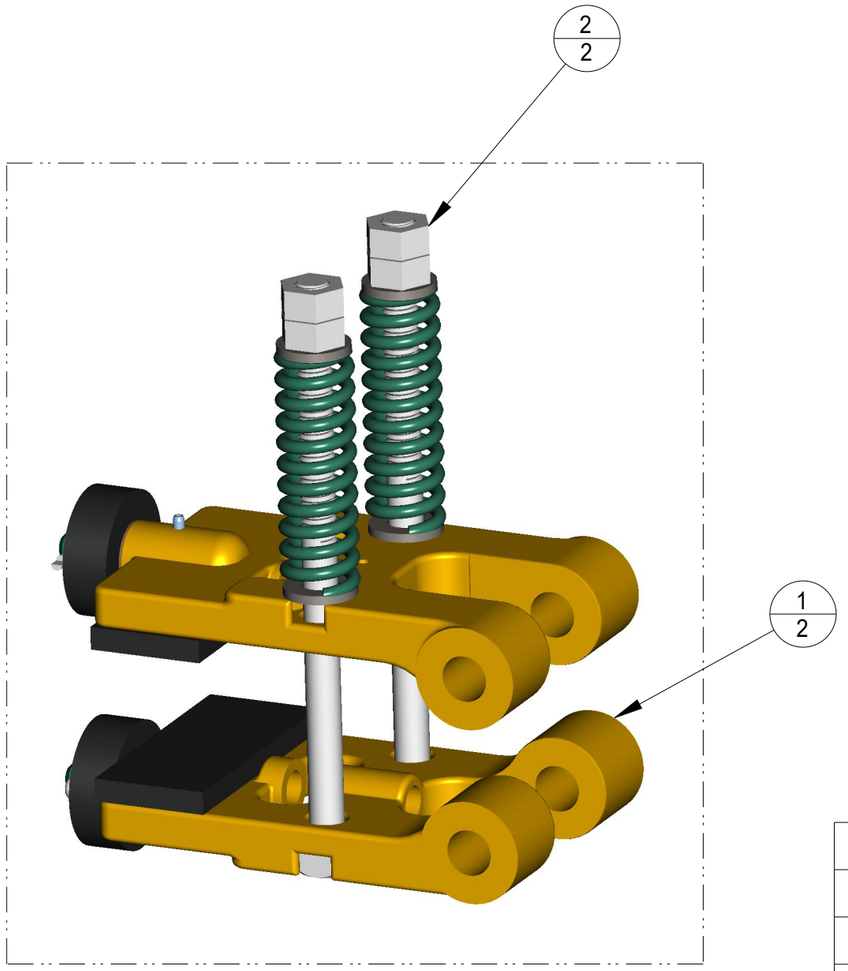

INSTRUCTION SHEET 3

QTY	DRAWING NO.	TITLE	ITEM NO.
1	1030-863	INSTRUCTION SHEET	3
2	1030-827	HARDWARE ASSEMBLY, UZD BRAKE	2
2	1030-468	BRAKE ASSEMBLY, UZD	1

PARTS LIST

NEXT ASSY
1030-042K
1030-021K
1030-021K-COMED

SOURCE: (M/P) P

HVS MATERIAL CODE:

QTY. OF MATERIAL:

© Prolec-GE Waukesha, Inc. All rights reserved.

UNLESS OTHERWISE SPECIFIED DIMENSIONS ARE IN INCHES TOLERANCE ARE
FRACTIONS DECIMALS ANGLES
.XX ± .01 X° ± 1°
.XXX ± .005
DO NOT SCALE DRAWING

DRC / ECR NUMBER:

MATERIAL ANALYSIS NUMBER:

DATE ANALYSIS PERFORMED:

APPROVALS		DATE
DRAWN	T. LY	3/10/14
CHECKED		
QC		

waukesha
9011 GOVERNORS ROW DALLAS, TEXAS 75247

TITLE KIT-BRAKE ROLLER UZD

SIZE	SCALE	DWG. NO.	REV.
B	1.000	1030-042K	B

MATERIAL SEE PARTS LIST

SHEET 1 of 1

COMPANY AND PROPRIETARY: This document contains proprietary information of Prolec-GE Waukesha, Inc. ("Waukesha") and may not be disclosed, copied, modified or used without the written permission of Waukesha. If Waukesha has authorized your possession and/or use of this document, Waukesha has granted you a limited, revocable license to use this document and the information in it only for purposes specified by Waukesha. The document must be promptly returned to Waukesha, after its use and/or upon demand by Waukesha. Any possession, disclosure, copying, modification or use not authorized by Waukesha, can constitute a violation of applicable law and be subject to severe penalties.
©2022 Prolec-GE Waukesha, Inc. All Rights Reserved.

NOTES:

1. SEAL ALL PARTS IN A PLASTIC BAG.

REVISIONS				
LTR.	REVISION	DATE	APPROVAL	
A	1) ITEM 2 WAS 1030-863-2 PER ECR # 030722A	7-22-03	JW	MG

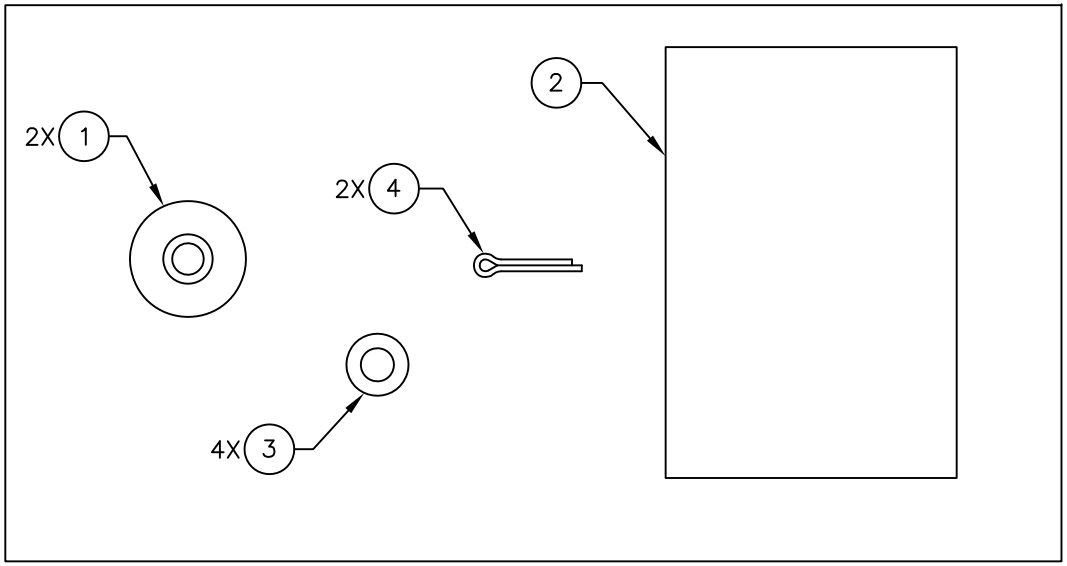

CONFIDENTIAL AND PROPRIETARY
This document contains proprietary information of SPX Transformer Solutions, Inc. and may not be disclosed, copied, modified or used without the written permission of SPX Transformer Solutions, Inc. If SPX Transformer Solutions, Inc. has authorized your possession and/or use of this document, SPX Transformer Solutions, Inc. has granted you a limited, revocable license to use this document and the information in it only for purposes specified by SPX Transformer Solutions, Inc. The document must be promptly returned to SPX Transformer Solutions, Inc., after its use and/or upon demand by SPX Transformer Solutions, Inc. Any possession, disclosure, copying, modification or use not authorized by SPX Transformer Solutions, Inc., can constitute a violation of applicable law and be subject to severe penalties.

© 2003 SPX Transformer Solutions, Inc. All rights reserved.

EQUIPMENT TYPE / NO. WAUKESHA UZD			TITLE KIT – BRAKE ROLLER BULLETIN
DRAWN JW	CHECKED M Garza	NEXT ASSY	PH. (800) 338-5526
SCALE 1/1	DATE 7-21-03	SHEET 1 OF 1	FAX (214) 637-1157
HIGH VOLTAGE SUPPLY®	B	9011 GOVERNORS ROW DALLAS, TEXAS 75247	DRAWING NUMBER 1030-043K

QTY	PARTS LIST		
V1	DWG. NUMBER	TITLE	ITEM NO.
2	8010-261-101	PIN, COTTER, SS STEEL PIN DIA. .062, .50 LG.	4
4	8010-166-25	WASHER, FLAT, SS STEEL OD .47, ID .25, .02 THK.	3
1	1030-863	INSTRUCTION SHEET	2
2	1030-470	ROLLER ASSEMBLY	1

EQUIPMENT TYPE / NO.	DWG. NO.	SH	REV.
WAUKESHA UZD	1030-1726K	1	A

NOTES:
1. WAUKESHA P/N - 0550012R1632.
2. 1030-1726K-V1 IS FOR THREE PHASE (SAP# 2062624).
3. 1030-1726K-V2 IS FOR SINGLE PHASE (SAP# 2062623).

REVISIONS

REV	DESCRIPTION	DATE	APPROVAL	
G	1. REDRAWN, REORGANIZE FOR CLARITY 2. ADDED SNAP RING PER ECR # 190424A	4/24/19	TL	JP
H	1. ADDED #6 DRILL BIT, TAPERED REAMER 2. REPLATE SCH SCREW TO HEX HD PER ECR #190701B	7/1/119	TL	JP
H1	1. CHANGED ITEMS 1-10 TO BE 1030-2166 AS PURCH FROM WAUKESHA PER ECR #210805F	8/10/21	KM	JP

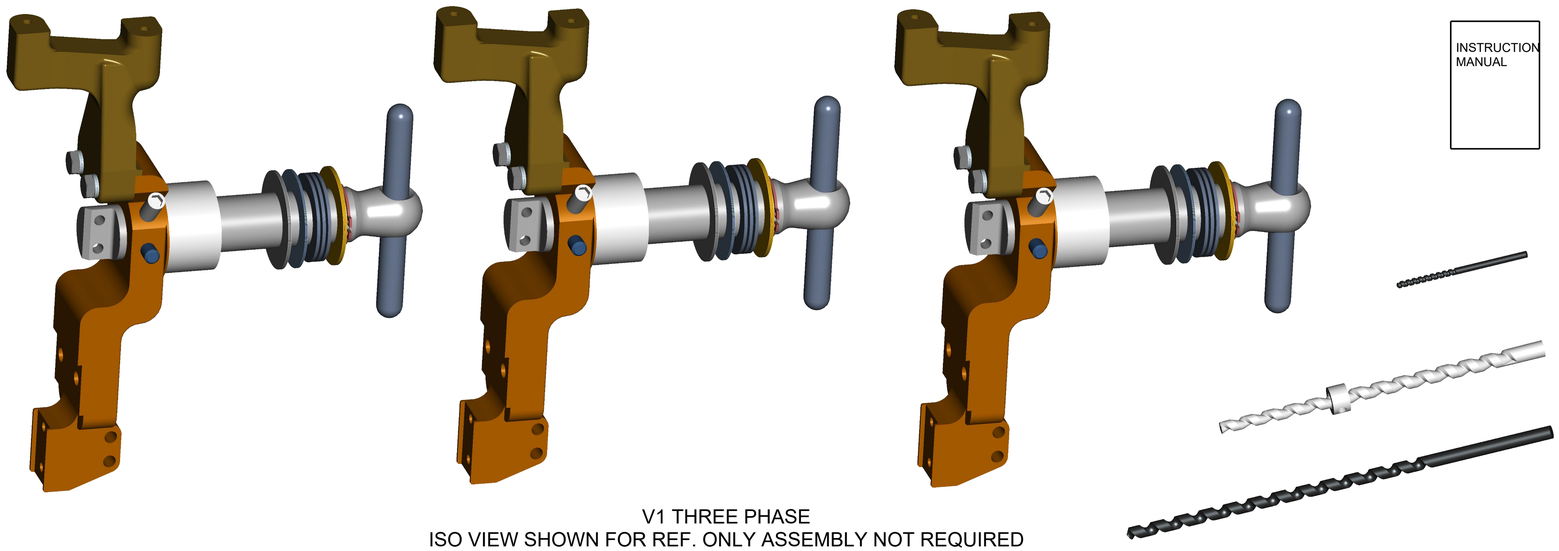

V1 THREE PHASE
ISO VIEW SHOWN FOR REF. ONLY ASSEMBLY NOT REQUIRED

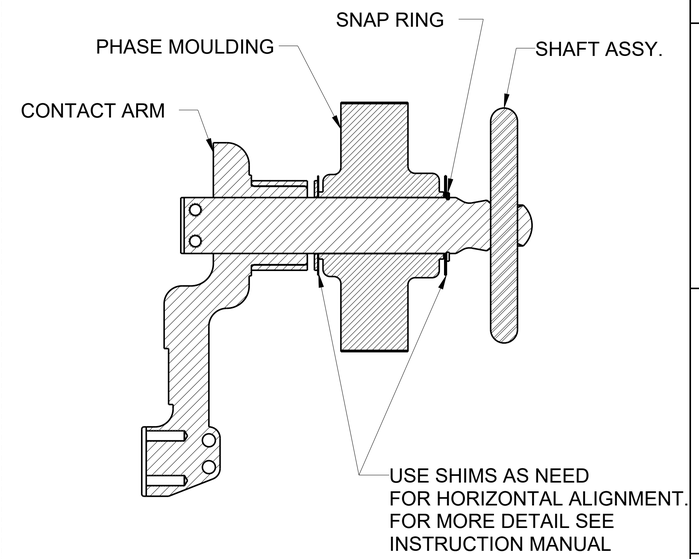

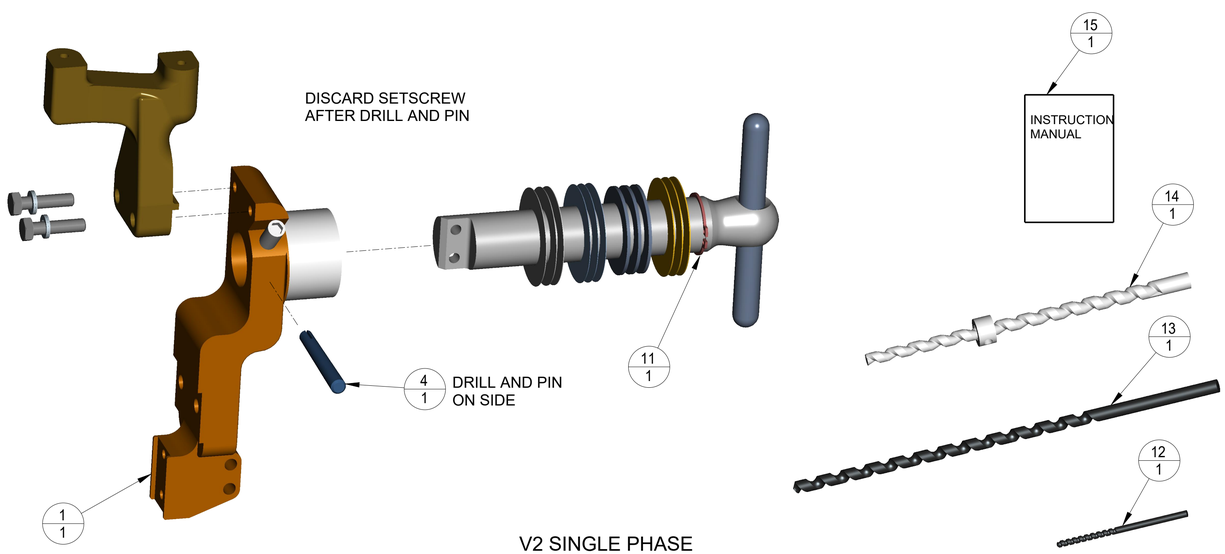

V2 SINGLE PHASE
ISO VIEW SHOWN FOR REF. ONLY ASSEMBLY NOT REQUIRED

SAP NO.	V2	V1	DRAWING NO.	TITLE	ITEM NO.
N/A	1	1	PRE-75UZD-MANUAL	INSTRUCTION MANUAL	15
N/A	1	1	1030-1125	TAPERED REAMER	14
N/A	1	1	1030-758	#6 DRILL BIT	13
N/A	1	1	1030-2067	DRILL BIT, 3MM	12
N/A	1	3	1030-480	SNAP RING	11
2006056	1	3	1030-479	TAPER PIN	4
2004210 2004211	1	3	1030-2166	MAIN SELECTOR UZD, XFMRS PRIOR TO 1975	1
N/A	QTY		PARTS LIST		

NEXT ASSY
1030-1726K

SOURCE: (M/P) M
HVS MATERIAL CODE:
QTY. OF MATERIAL:

UNLESS OTHERWISE SPECIFIED
DIMENSIONS ARE IN INCHES
TOLERANCE ARE
FRACTIONS DECIMALS ANGLES
.XX ± .01 X° ± 1°
.XXX ± .005
DO NOT SCALE DRAWING

MATERIAL ANALYSIS NUMBER:
DATE ANALYSIS PERFORMED:

DRC / ECR NUMBER:

APPROVALS	DATE
DRAWN T. LY	4/24/19
CHECKED	
QC	

© Prolec-GE Waukesha, Inc. All rights reserved.

waukesha
9011 GOVERNORS ROW DALLAS, TEXAS 75247

TITLE
KIT-MAIN SELECTOR
UZD, XFMRS PRIOR TO 1975

SIZE	SCALE	DWG. NO.	REV.
D	0.750	1030-1726K	A

MATERIAL: SEE PARTS LIST
SHEET 1 of 1

COMPANY AND PROPRIETARY: This document contains proprietary information of Prolec-GE Waukesha, Inc. ("Waukesha") and may not be disclosed, copied, modified or used without the written permission of Waukesha. If Waukesha has authorized your possession and/or use of this document, Waukesha has granted you a limited, revocable license to use this document and the information it sets forth purposes specified by Waukesha. The document must be promptly returned to Waukesha, after its use and/or upon demand by Waukesha. Any possession, disclosure, copying, modification or use of this document, without the express written permission of Waukesha, can constitute a violation of applicable law and be subject to severe penalties.
©2022 Prolec-GE Waukesha, Inc. All Rights Reserved.

EQUIPMENT TYPE / NO.

WAUKESHA UZD

DWG. NO.	SH	REV.
1030-1730K	1	B

REVISIONS

LTR	REVISION	DATE	APPROVAL	
B	1. REDRAWN ON PRO/E DATA BASE PER ECR # 140219A	11/15/13	TL	JP

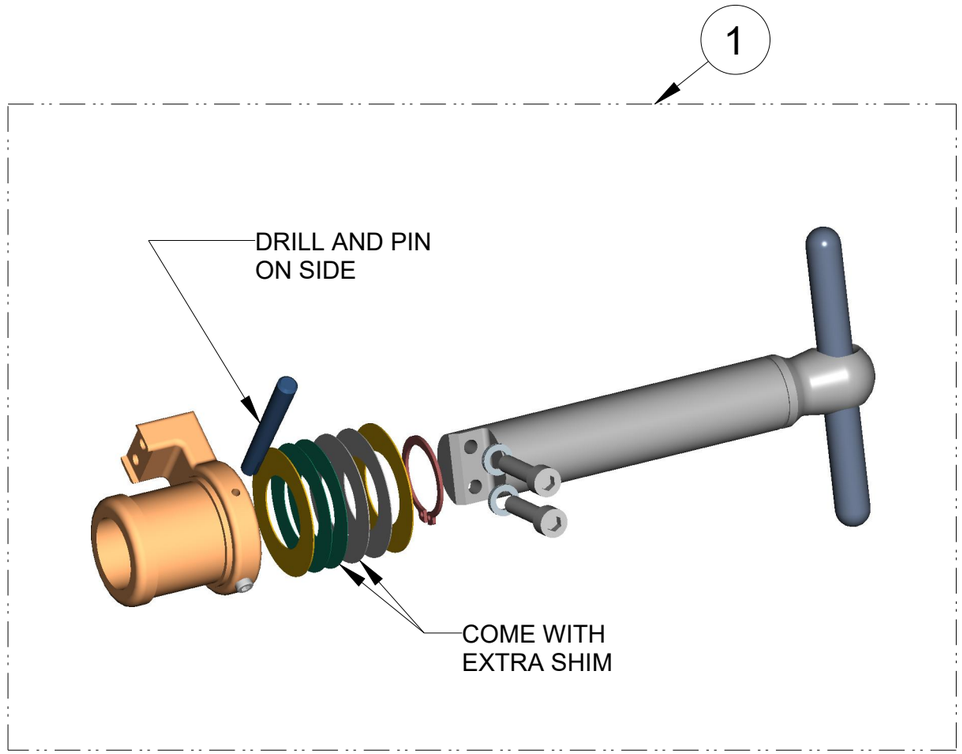

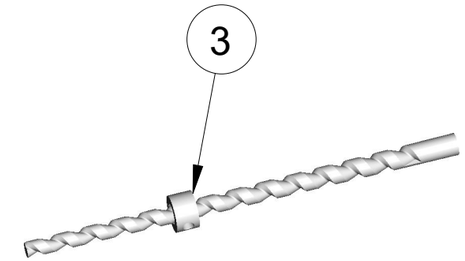

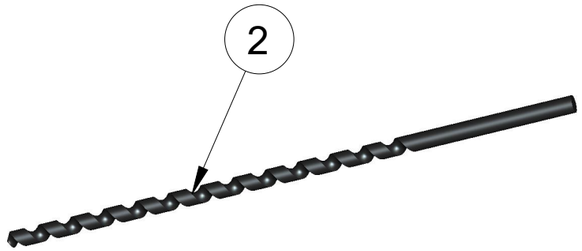

QTY V2	QTY V1	DRAWING NO.	TITLE	ITEM NO.
1	1	1030-1125	TAPERED REAMER	3
1	1	1030-758	#6 DRILL BIT	2
3	1	1030-478P	CONTACT ARM SUB ASSEMBLY	1

PARTS LIST

NEXT ASSY
1030-021K
1030-021K-COMED

SOURCE: (M/P) M

HVS MATERIAL CODE:

QTY. OF MATERIAL:

© Prolec-GE Waukesha, Inc. All rights reserved.

UNLESS OTHERWISE SPECIFIED
DIMENSIONS ARE IN INCHES
TOLERANCE ARE
FRACTIONS DECIMALS ANGLES
.XX ± .01 X° ± 1°
.XXX ± .005
DO NOT SCALE DRAWING

DRC / ECR NUMBER:

waukesha
9011 GOVERNORS ROW DALLAS, TEXAS 75247

MATERIAL ANALYSIS NUMBER:

DATE ANALYSIS PERFORMED:

APPROVALS		DATE
DRAWN	T. LY	11/15/13
CHECKED		
QC		

TITLE

REVERSING CONTACT ARM SUBASSEMBLY

SIZE	SCALE	DWG. NO.	REV.
B	0.500	1030-1730K	B

MATERIAL: SEE PARTS LIST

SHEET 1 of 1

COMPANY AND PROPRIETARY: This document contains proprietary information of Prolec-GE Waukesha, Inc. ("Waukesha") and may not be disclosed, copied, modified or used without the written permission of Waukesha. If Waukesha has authorized your possession and/or use of this document, Waukesha has granted you a limited, revocable license to use this document and the information in it only for purposes specified by Waukesha. The document must be promptly returned to Waukesha, after its use and/or upon demand by Waukesha. Any possession, disclosure, copying, modification or use not authorized by Waukesha, can constitute a violation of applicable law and be subject to severe penalties.
©2022 Prolec-GE Waukesha, Inc. All Rights Reserved.

EQUIPMENT TYPE / NO. UZD

DWG. NO. 1030-1741K | SH 1 | REV. C

NOTES:
1. PURCHASE AS SAP# 2045295 (WN# 0550012R1618).
2. WAS D16517.
3. SHIP IN PLASTIC ZIPLOCK BAG W/DESICANT.

REVISIONS				
LTR	REVISION	DATE	APPROVAL	
A	1) NEW DRAWING PER DRC# 011714A	01/23/2014	AM	JP
B	1) ITEM 3 WAS QTY 1 2) ITEM 4 WAS QTY 1 PER ECR#140618A	7/3/2014	AM	JP
B1	1)CHANGED VIEW TO ISO PER ECR # 150804A	08-04-15	TA	JP
C	1) REM ITEM 4 (8010-168-08) PER ECR# 160802B	8/3/2016	AM	JP

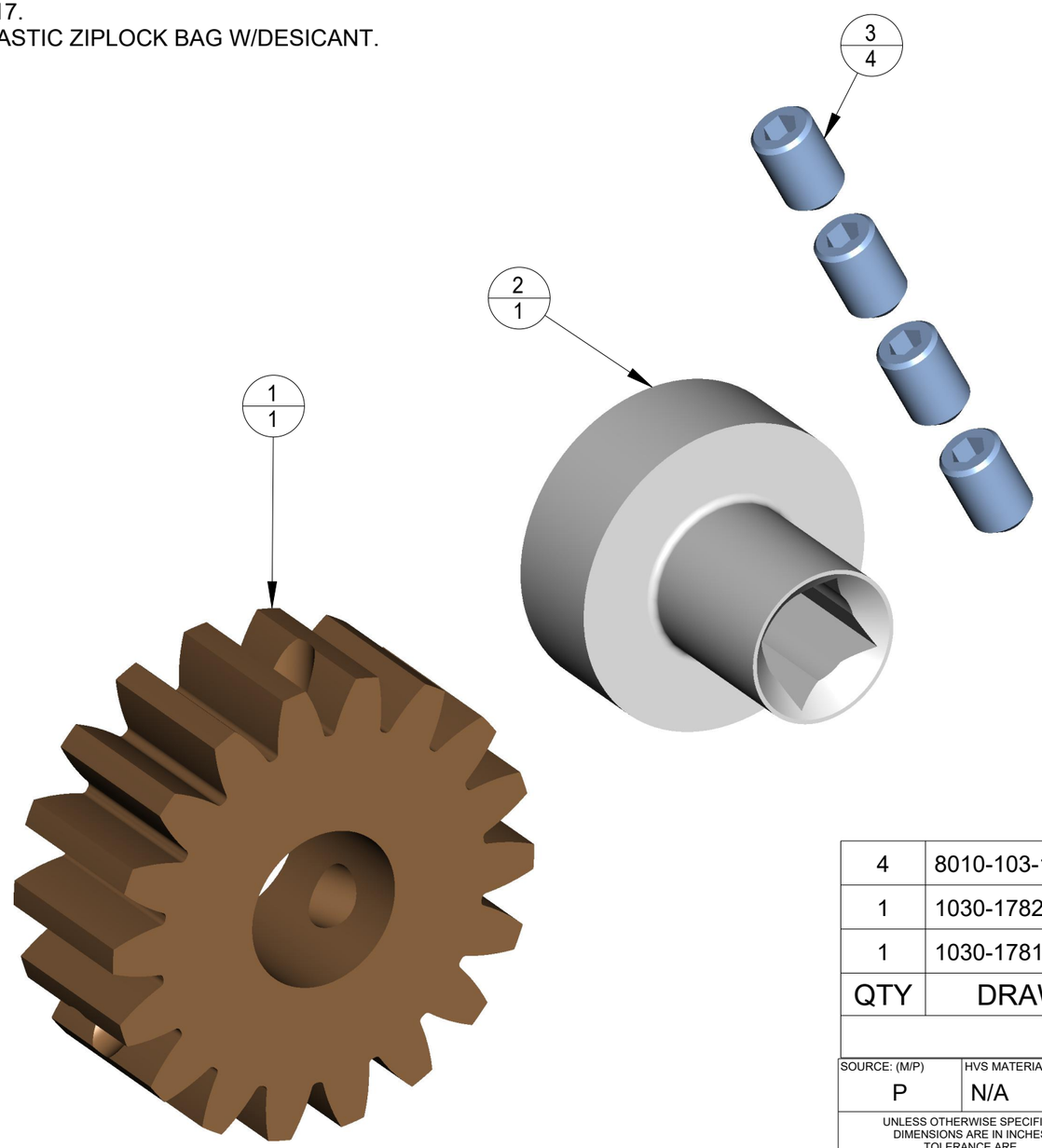

QTY	DRAWING NO.	TITLE	ITEM NO.
4	8010-103-104	SETSCREW, SCH M4 X .7 X 6mm LG METRIC ST	3
1	1030-1782	HUB	2
1	1030-1781	GEAR	1

PARTS LIST

SOURCE: (M/P)	HVS MATERIAL CODE:	QTY. OF MATERIAL:
P	N/A	N/A

© Prolec-GE Waukesha, Inc. All rights reserved.

UNLESS OTHERWISE SPECIFIED
DIMENSIONS ARE IN INCHES
TOLERANCE ARE
FRACTIONS DECIMALS ANGLES
.XX ± .01 X° ± 1°
.XXX ± .005
DO NOT SCALE DRAWING

DRC / ECR NUMBER: DRC# 011714A

APPROVALS	DATE
DRAWN A. MARTIN	1/23/2014
CHECKED	
QC	

MATERIAL ANALYSIS NUMBER: N/A

DATE ANALYSIS PERFORMED: N/A

NEXT ASSY

COMPANY AND PROPRIETARY: This document contains proprietary information of Prolec-GE Waukesha, Inc. ("Waukesha") and may not be disclosed, copied, modified or used without the written permission of Waukesha. If Waukesha has authorized your possession and/or use of this document, Waukesha has granted you a limited, revocable license to use this document and the information in it only for purposes specified by Waukesha. The document must be promptly returned to Waukesha, after its use and/or upon demand by Waukesha. Any possession, disclosure, copying, modification or use not authorized by Waukesha, can constitute a violation of applicable law and be subject to severe penalties.
©2022 Prolec-GE Waukesha, Inc. All Rights Reserved.

waukesha
9011 GOVERNORS ROW DALLAS, TEXAS 75247

TITLE
LIMIT SWITCH BRASS GEAR SET

SIZE	SCALE	DWG. NO.	REV.
B	3.000	1030-1741K	C

MATERIAL: SEE NOTES

SHEET 1 of 1

EQUIPMENT TYPE / NO.	DWG. NO.	SH	REV.
WAUKESHA UZD	1030-1749K	1	C1

NOTES:
1. VERIFY P/N TO WAUKESHA'S TRANSFORMER SERIAL NUMBER.

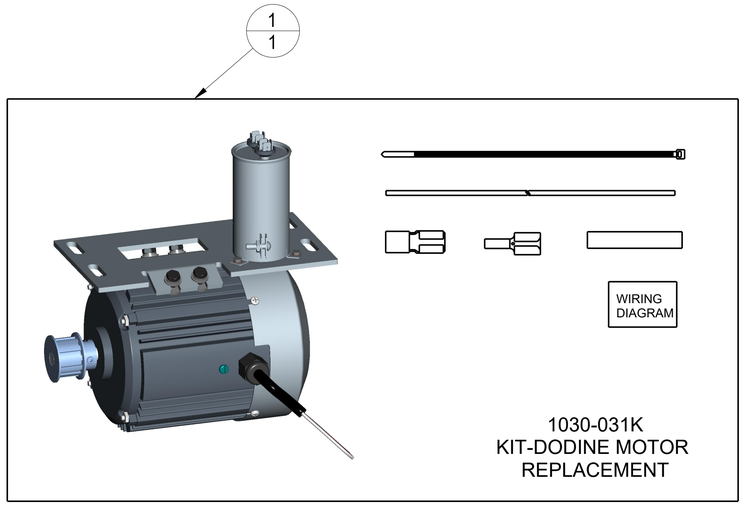

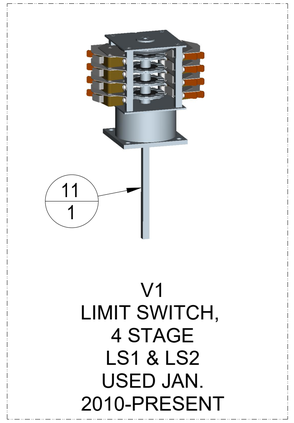

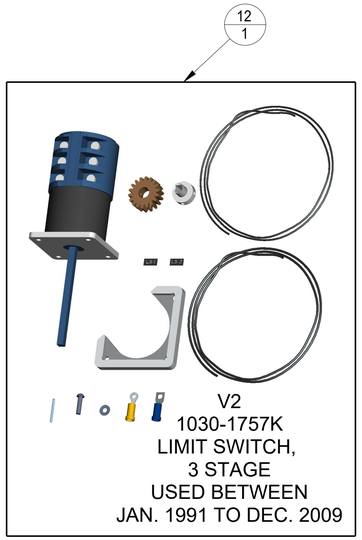

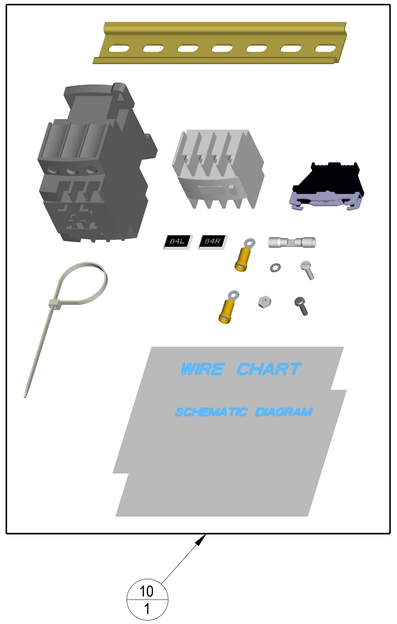

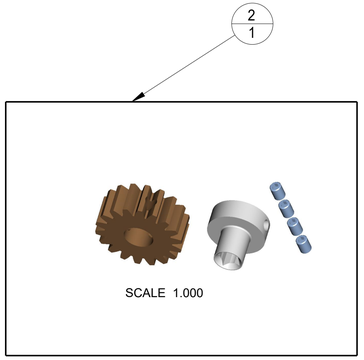

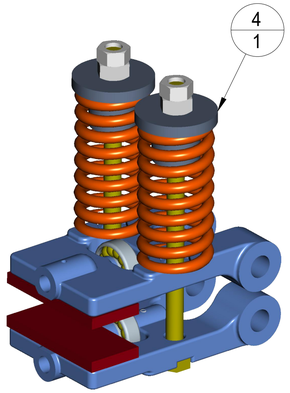

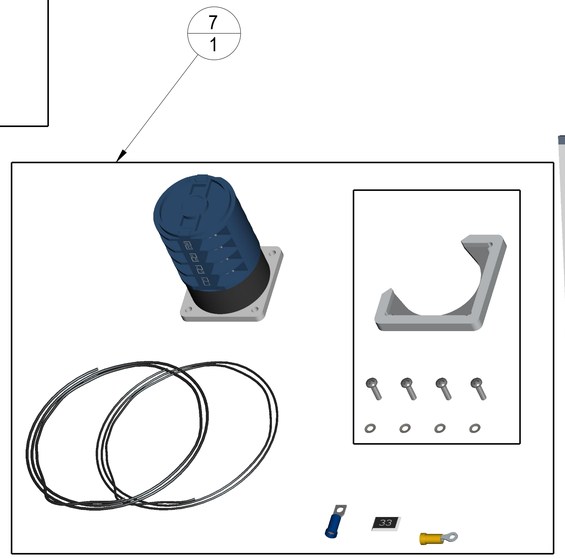

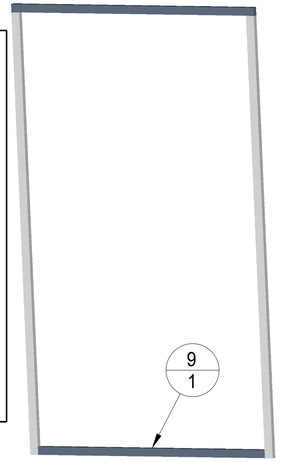

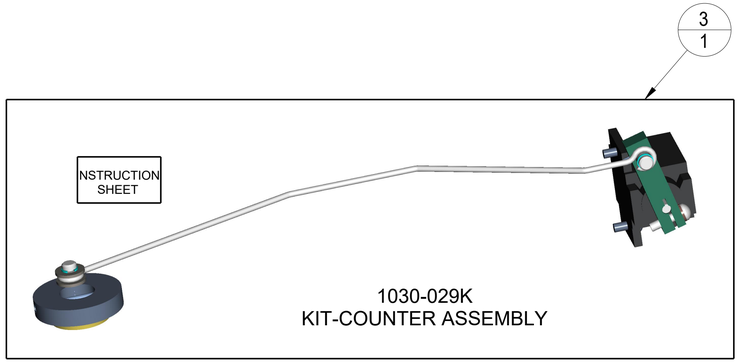

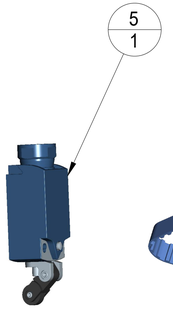

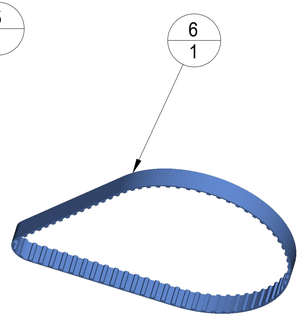

REVISIONS

REV	DESCRIPTION	DATE	APPROVAL	
A	1. NEW DRAWING CREATED PER DRC# 100819A	10/21/19	TL	JP
B	REPLACE 1030-2017 WITH 1030-1758K PER ECR#210226B	02/26/21	AG	JP
C	ADD 84 RAISE AND LOWER KIT PER ECR #220307A	03/07/22	AG	JP
C1	UPDATE VIEW OF 1030-1757K PER ECR #221005B	10/05/22	AG	AM

V3	V2	V1	DRAWING NO.	TITLE	ITEM NO.
1	-	-	1030-1756K	KIT-LIMIT SWITCH, 2 STAGE, V3	13
-	1	-	1030-1757K	KIT-LIMIT SWITCH, 3 STAGE, V2	12
-	-	1	1030-2016	LIMIT SWITCH, 4 STAGE, LS1 & LS2	11
1	1	1	1030-2152K	84 RAISE AND LOWER CONT. REPLACEMENT KIT	10
1	1	1	1030-1624	GASKET, DOOR MOTOR DRIVE ASSEMBLY	9
1	1	1	1030-2018	START CONTACTOR, 33S	8
1	1	1	1030-1758K	TRANS MODIF RETROFIT/33 ASEA SW #2039530	7
1	1	1	1030-834	BELT, DRIVE BODINE MOTOR REPLACEMENT	6
1	1	1	1030-2021	HAND CRANK, INTERLOCK SWITCH	5
1	1	1	1030-2019	BRAKE ASSEMBLY, MOTOR DRIVE	4
1	1	1	1030-029K	KIT-COUNTER ASSEMBLY	3
1	1	1	1030-1741K	LIMIT SWITCH, BRASS GEAR SET	2
1	1	1	1030-031K	KIT-BODINE MOTOR REPLACEMENT	1
	QTY			PARTS LIST	

NEXT ASSY

SOURCE: (M/P) M
HVS MATERIAL CODE:
QTY. OF MATERIAL:

UNLESS OTHERWISE SPECIFIED DIMENSIONS ARE IN INCHES
TOLERANCE ARE
FRACTIONS DECIMALS ANGLES
.XX ± .01 X° ± 1°
.XXX ± .005
DO NOT SCALE DRAWING

MATERIAL ANALYSIS NUMBER:
DATE ANALYSIS PERFORMED:

DRC / ECR NUMBER:

APPROVALS	DATE
DRAWN T. LY	10/8/19
CHECKED NC	10/8/19
QC	

© Prolec-GE Waukesha, Inc. All rights reserved.

waukesha
9011 GOVERNORS ROW DALLAS, TEXAS 75247

TITLE
KIT-UZD BUE
REPLACEMENT PARTS

SIZE	SCALE	DWG. NO.	REV.
D	NONE	1030-1749K	C1

MATERIAL: SEE PARTS LIST
SHEET 1 of 1

COMPANY AND PROPRIETARY: The document contains proprietary information of Prolec-GE Waukesha, Inc. ("Waukesha") and may not be disclosed, copied, modified or used without the express written consent of Waukesha. Any unauthorized use or disclosure violates the law of trade secrets and other laws and treaties and subjects the violator to civil and criminal penalties. The information is only for purposes specified by Waukesha. The document must be promptly returned to Waukesha, after its use and/or upon demand by Waukesha. Any possession, reproduction, or disclosure of the information not in accordance with the terms and conditions of Waukesha's agreement, if any, with the recipient, can constitute a violation of applicable law and be subject to severe penalties.
©2022 Prolec-GE Waukesha, Inc. All Rights Reserved.

EQUIPMENT TYPE / NO.

WAUKESHA UZD

DWG. NO.	SH	REV.
1030-1756K	1	A

NOTES:

1. SOURCE INFORMATION:
   VENDOR NAME: WAUKESHA
   SAP NO: 2059783 (KIT)
   DISCRIPTION: LIMIT SWITCH 2 STAGE VERSION KIT.

2. RETROFIT 2 STAGE KIT USED TO REPLACE ASEA LIMIT SWITCH PRIOR TO JAN. 1991.

3. SELL AT A KIT ONLY.

4. VERIFY P/N TO WAUKESHA'S TRANSFORMER SERIAL NUMBER.

REVISIONS

LTR	REVISION	DATE	APPROVAL	
A	1. NEW DRAWING CREATED PER DRC#100819A	10/21/19	TL	JP

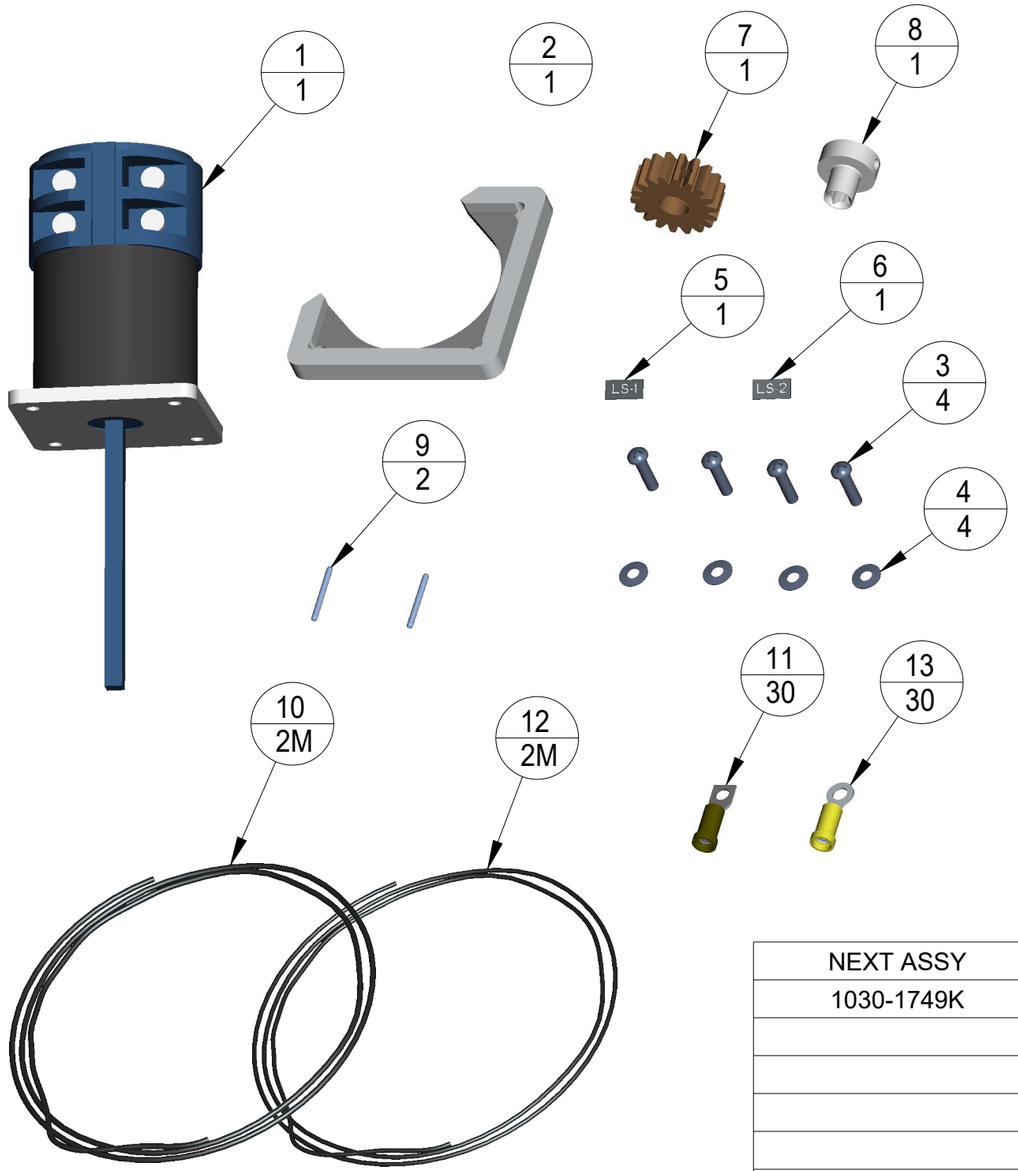

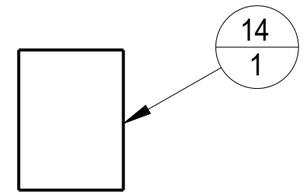

QTY	SAP NO.	TITLE	ITEM NO.
1	2045294	TRANS MODIF DRAWING PACKET R1236	14
30	2016229	TERM INSUL 12-10 S6 PANDUIT	13
2M	2015897	WIRE - FEP #12 BLACK 65 STRAND	12
30	2016056	TERM INSUL RECT 16-14 S6 RELAY,SWITCH	11
2M	2015896	WIRE - FEP #14 BLACK 41 STRAND	10
2	2006032	ROLL PIN 2.2 DIA X 20 LONG	9
1	2006346	HUB	8
1	2011517	GEAR BRASS	7
1	2042424	NAMEPLATE 1 LINE LS-2 5/32BB/WLGM	6
1	2042425	NAMEPLATE 1 LINE LS-1 5/32BB/WLGM	5
4	2006001	WASHER CONE SPRING M4 SCR SS	4
4	2006019	SCREW FILIST.HD. M4 X 16 SST	3
1	2006353	CLAMP ASEA/BLUELINE CONVERS.	2
1	2048532	SWITCH LS-LIMIT SWITCH 2-STAGE VERSION	1

PARTS LIST

NEXT ASSY
1030-1749K

SOURCE: (M/P) P

HVS MATERIAL CODE:

QTY. OF MATERIAL:

© Prolec-GE Waukesha, Inc. All rights reserved.

UNLESS OTHERWISE SPECIFIED DIMENSIONS ARE IN INCHES TOLERANCE ARE FRACTIONS DECIMALS ANGLES .XX ± .01 X° ± 1° .XXX ± .005

DO NOT SCALE DRAWING

DRC / ECR NUMBER:

MATERIAL ANALYSIS NUMBER:

DATE ANALYSIS PERFORMED:

APPROVALS		DATE
DRAWN	T. LY	10/21/19
CHECKED	NC	10/22/19
QC		

waukesha

9011 GOVERNORS ROW DALLAS, TEXAS 75247

TITLE

KIT-LIMIT SWITCH 2-STAGE, V3

SIZE	SCALE	DWG. NO.	REV.
B	0.500	1030-1756K	A

MATERIAL: SEE NOTES

SHEET 1 of 1

COMPANY AND PROPRIETARY: This document contains proprietary information of Prolec-GE Waukesha, Inc. ("Waukesha") and may not be disclosed, copied, modified or used without the written permission of Waukesha. If Waukesha has authorized your possession and/or use of this document, Waukesha has granted you a limited, revocable license to use this document and the information in it only for purposes specified by Waukesha. The document must be promptly returned to Waukesha, after its use and/or upon demand by Waukesha. Any possession, disclosure, copying, modification or use not authorized by Waukesha, can constitute a violation of applicable law and be subject to severe penalties.
©2022 Prolec-GE Waukesha, Inc. All Rights Reserved.

EQUIPMENT TYPE / NO.

WAUKESHA UZD

DWG. NO.	SH	REV.
1030-1757K	1	

NOTES:
1. SOURCE INFORMATION:
   VENDOR NAME: WAUKESHA
   SAP NO. 2045292 (KIT)
   DISCRIPTION: LIMIT SWITCH 3 STAGE VERSION KIT.

2. LIMIT SWITCH, 3 STAGE USED BETWEEN JAN.1991 TO DEC. 2009.

3. SELL AS A KIT ONLY.

3. VERIFY P/N TO WAUKESHA'S TRANSFORMER SERIAL NUMBER.

REVISIONS

LTR	REVISION	DATE	APPROVAL	
A	1. NEW DRAWING CREATED PER DRC #100819A	10/21/19	TL	JP
B	1) REVISE DRAWING TO MATCH WN BOM PER ECR# 220920A	9/20/2022	AM	JP

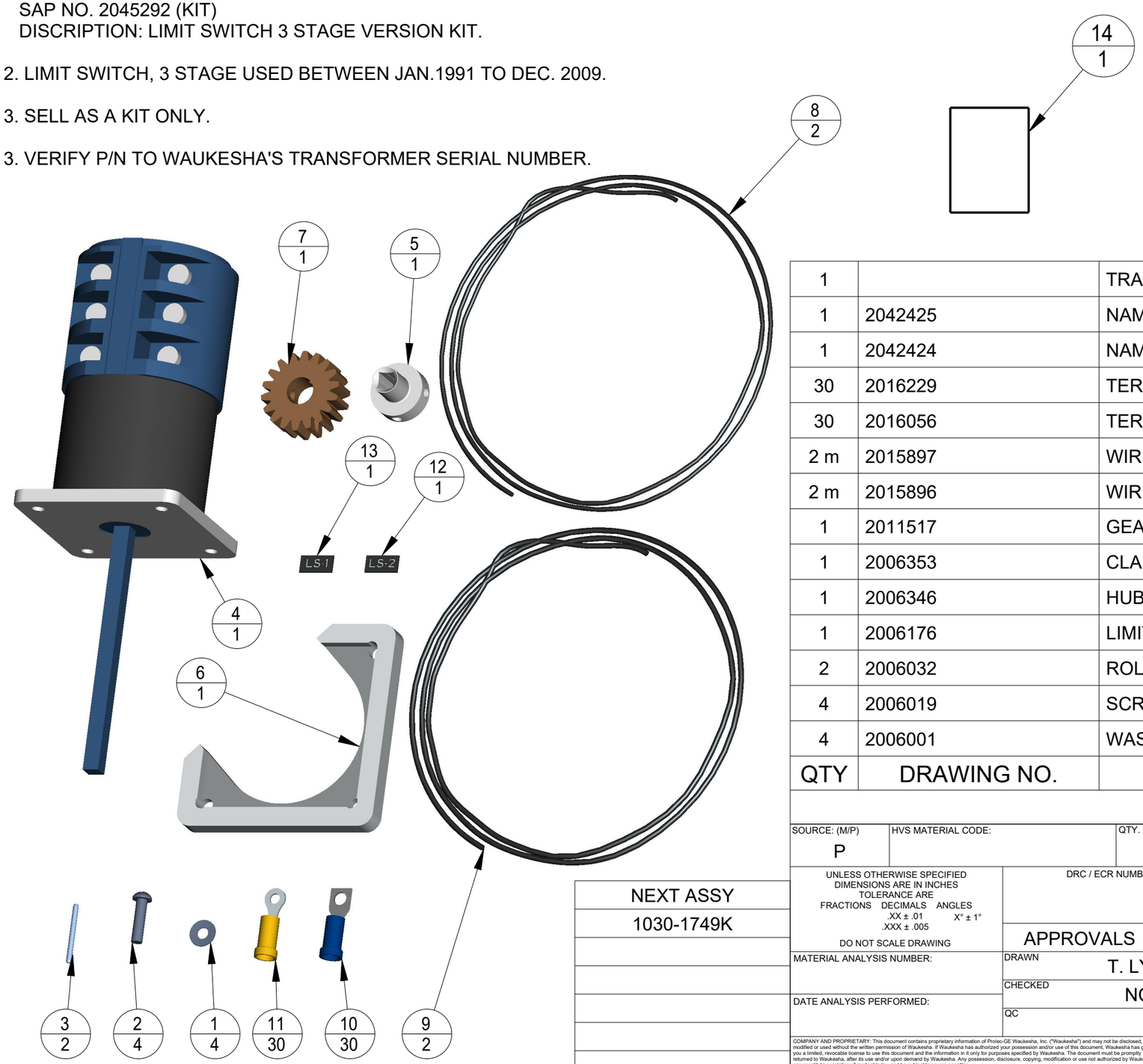

QTY	DRAWING NO.	TITLE	ITEM NO.
1		TRANS MODIF	14
1	2042425	NAMEPLATE 1 LINE LS-1 5/32BB/WLGM	13
1	2042424	NAMEPLATE 1 LINE LS-2 5/32BB/WLGM	12
30	2016229	TERM INSUL 12-10 S6 PANDUIT (8010-152-16)	11
30	2016056	TERM INSUL RECT 16-14 S6 RELAY SWTT (8010-229-02)	10
2 m	2015897	WIRE - FEP #12 BLACK 65 STRAND	9
2 m	2015896	WIRE - FEP #14 BLACK 41 STRAND	8
1	2011517	GEAR BRASS (1030-1781)	7
1	2006353	CLAMP ASEA/BLUELINE CONVERS (1030-2087)	6
1	2006346	HUB (1030-1781)	5
1	2006176	LIMIT SWITCH 3 STAGE, V2	4
2	2006032	ROLL PIN 2MM DIA X 20MM LONG (8010-168-09)	3
4	2006019	SCREW, FILIST. HD M4 X 16 SST (8010-224-409)	2
4	2006001	WASHER, CONE SPRING M4 SCR SS	1

PARTS LIST

NEXT ASSY
1030-1749K

SOURCE: (M/P) P

HVS MATERIAL CODE:

QTY. OF MATERIAL:

© Prolec-GE Waukesha, Inc. All rights reserved.

UNLESS OTHERWISE SPECIFIED
DIMENSIONS ARE IN INCHES
TOLERANCE ARE
FRACTIONS DECIMALS ANGLES
.XX ± .01 X° ± 1°
.XXX ± .005
DO NOT SCALE DRAWING

DRC / ECR NUMBER:

waukesha
9011 GOVERNORS ROW DALLAS, TEXAS 75247

APPROVALS		DATE
DRAWN	T. LY	10/21/19
CHECKED	NC	10/22/19
QC		

MATERIAL ANALYSIS NUMBER:

DATE ANALYSIS PERFORMED:

TITLE
KIT-LIMIT SWITCH 3 STAGE, V2

SIZE	SCALE	DWG. NO.	REV.
B	0.625	1030-1757K	

MATERIAL: SEE NOTES

SHEET 1 of 1

COMPANY AND PROPRIETARY: This document contains proprietary information of Prolec-GE Waukesha, Inc. ("Waukesha") and may not be disclosed, copied, modified or used without the written permission of Waukesha. If Waukesha has authorized your possession and/or use of this document, Waukesha has granted you a limited, revocable license to use this document and the information in it only for purposes specified by Waukesha. The document must be promptly returned to Waukesha, after its use and/or upon demand by Waukesha. Any possession, disclosure, copying, modification or use not authorized by Waukesha, can constitute a violation of applicable law and be subject to severe penalties.
©2022 Prolec-GE Waukesha, Inc. All Rights Reserved.

EQUIPMENT TYPE / NO.

WAUKESHA UZD/BUE

DWG. NO.	SH	REV.
1030-1758K	1	A

REVISIONS

LTR	REVISION	DATE	APPROVAL	
A	INITIAL RELEASE PER DRC# 011520A	1/15/20	TL	JP

NOTES:

1. ADAPTER CLAMP ITEM 2, FILE CORNERS OF SWITCH TO INSURE PROPER FIT ON TO ADAPTER CLAMP. PIN NO'S. ARE IDENTICAL ON REPLACEMENT SWITCH. REWIRE TO SAME PIN NO'S. FOR WIRING USE EXISTING SCHEMATIC AND MOTOR DRIVE MECHANISM CONTROL WIRING DRAWING OF THE TRANSFORMER.

2. ITEMS 4 AND 5 TO BE USED WHEN EXISTING WIRING IS 14 GAGE. ITEMS 3 AND 6 TO BE USED WHEN EXISTING WIRING IS 12 GAGE.

3. SAP KIT NO.: 2039530.

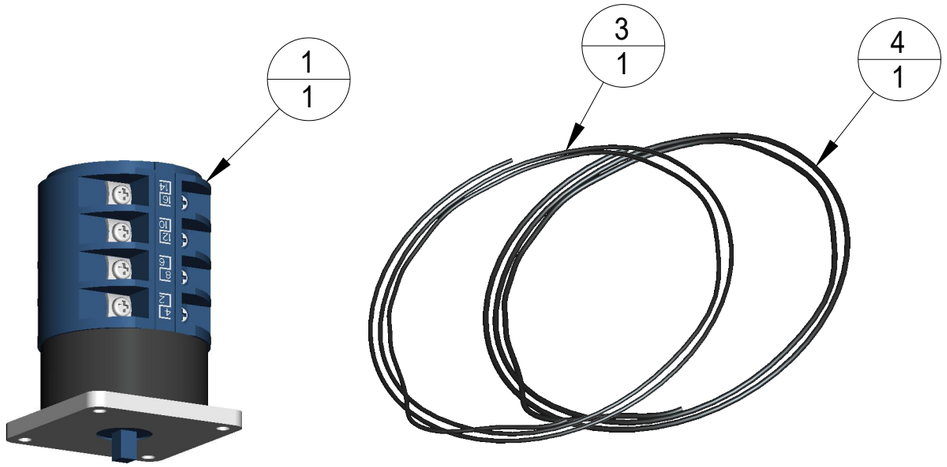

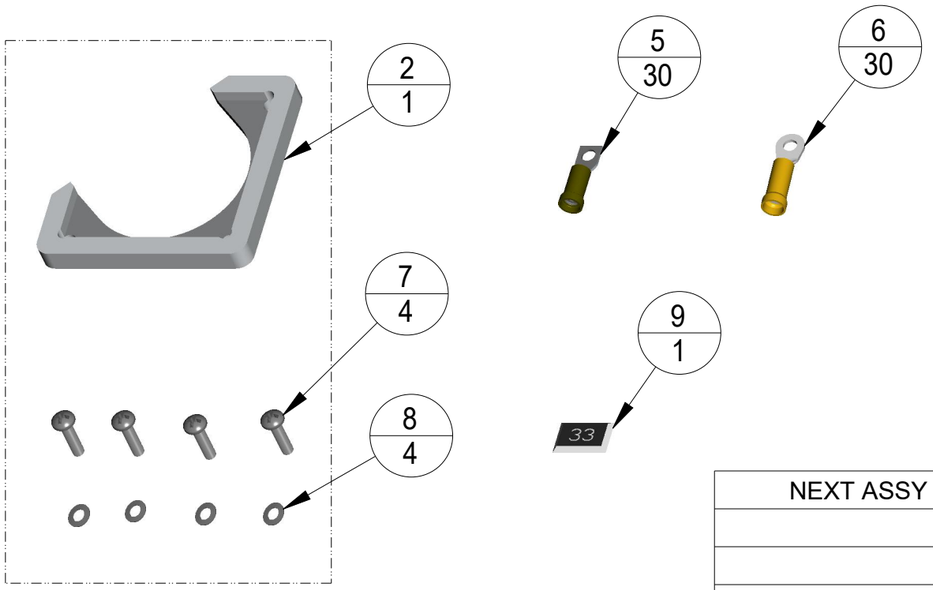

QTY	SAP NO.	DWG NO.	TITLE	ITEM NO.
1	2042426	1030-2088	NAMEPLATE 1 LINE 33 , 5/32BB/WLGM	9
4	2006001	8010-101-28	WASHER COME SPRING M4 SCR SS	8
4	2006019	1030-2091	SCREW, PH, PHILLIPS M4X0.7-6g x 16 LG	7
30	2016229	8010-152-16	TERMINAL INSUL. 12-10 S6	6
30	2016056	8010-229-02	TERMINAL, INSUL. RECT. 16-14 S6 RELAY, SW.	5
1	2015896		WIRE, FEP 14 AWG BLK 41 STRAND. 2M (6.6') LG	4
1	2015897		WIRE, FEP 12 AWG BLK 65 STRAND. 2M (6.6') LG	3
1	2006353	1030-2087	CLAMP ASEA/BLUELINE CONVERS	2
1	2006175	1030-2017	SWITCH 33 MAINTAINING CONTACT	1

PARTS LIST

NEXT ASSY

SOURCE: (M/P) P

HVS MATERIAL CODE:

QTY. OF MATERIAL:

© Prolec-GE Waukesha, Inc. All rights reserved.

UNLESS OTHERWISE SPECIFIED
DIMENSIONS ARE IN INCHES
TOLERANCE ARE
FRACTIONS DECIMALS ANGLES
.XX ± .01 X° ± 1°
.XXX ± .005

DO NOT SCALE DRAWING

DRC / ECR NUMBER:

MATERIAL ANALYSIS NUMBER:

DATE ANALYSIS PERFORMED:

APPROVALS		DATE
DRAWN	T. LY	1/13/20
CHECKED	SK	1/14/19
QC		

waukesha
9011 GOVERNORS ROW DALLAS, TEXAS 75247

TITLE
TRANS MODIF RETROFIT/33
ASEA SW #2039530

SIZE	SCALE	DWG. NO.	REV.
B	0.500	1030-1758K	A

MATERIAL: SEE PARTS LIST

SHEET 1 of 1

COMPANY AND PROPRIETARY: This document contains proprietary information of Prolec-GE Waukesha, Inc. ("Waukesha") and may not be disclosed, copied, modified or used without the written permission of Waukesha. If Waukesha has authorized your possession and/or use of this document, Waukesha has granted you a limited, revocable license to use this document and the information in it only for purposes specified by Waukesha. The document must be promptly returned to Waukesha, after its use and/or upon demand by Waukesha. Any possession, disclosure, copying, modification or use not authorized by Waukesha, can constitute a violation of applicable law and be subject to severe penalties.
©2022 Prolec-GE Waukesha, Inc. All Rights Reserved.

EQUIPMENT TYPE / NO.

WAUKESHA UZD

DWG. NO.	SH	REV.
1030-2152K	1	A

REVISIONS

LTR	REVISION	DATE	APPROVAL	
A	NEW PART PER DRC #122721A	02/11/22	AG	JP

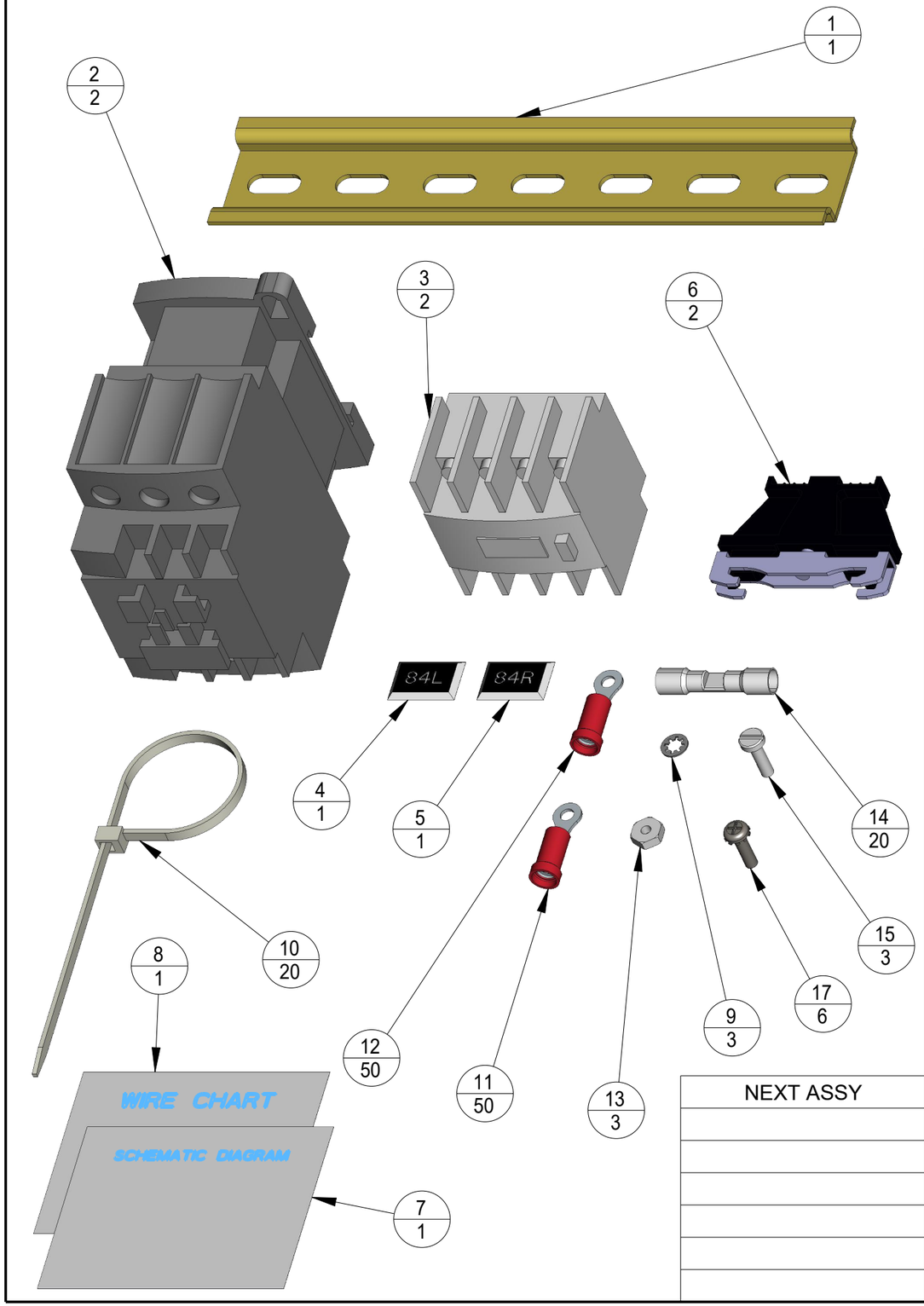

QTY	DRAWING NO.	TITLE	ITEM NO.
6	8010-363-207	SCREW, P, HD PHL 6-32X .50 (SST)	17
200 IN	8010-251	WIRE, BLACK INSULATION, 10AWG, MULTI-STRAND	16
3	8010-241-105	SCREW, PAN HD SLOTTED #6-32UNC X .50LG. ST	15
20	8010-235-02	BUTT SPLICE, STEP ASSY, #12-10 TO #16-14	14
3	8010-214-02	NUT, MACHINE, #6-32 UNC STEEL	13
50	8010-152-16	TERMINAL, RING INSULATED 12-10 #6 STUD	12
50	8010-152-09	TERMINAL, RING INSULATED 12-10 #8 STUD	11
20	8010-150-03	TIE, CABLE, NATURAL-COLOR, NYLON, .13W X 7.5 LNG	10
3	8010-104-02	WASHER, LOCK INTERNAL TOOTH, STEEL #6	9
1	1030-2188	WT# 0550012X1420-WIRE CHART	8
1	1030-2187	WT# I550012S1420 - SCHEMATIC DIAGRAM	7
2	1030-2173	DIN RAIL MOUNT END BRACKET	6
1	1030-2172	NAMEPLATE 1 LINE "84R"	5
1	1030-2171	NAMEPLATE 1 LINE "84L"	4
2	1030-2170	AUX. CONTACT BLOCK, TESYS DECA, 2NO + 2NC	3
2	1030-2169	CONTACTOR, 3P, 120V, 32A, W/1NO-1NC	2
1	1030-1486-7	DIN RAIL 7.5 MM HEIGHT	1

PARTS LIST

NEXT ASSY

SOURCE: (M/P)	HVS MATERIAL CODE:	QTY. OF MATERIAL:
M	N/A	N/A

© Prolec-GE Waukesha, Inc. All rights reserved.

UNLESS OTHERWISE SPECIFIED DIMENSIONS ARE IN INCHES TOLERANCE ARE
FRACTIONS DECIMALS ANGLES
.XX± .01 X° ± 1°
.XXX± .005
DO NOT SCALE DRAWING

DRC / ECR NUMBER: DRC #122721A

APPROVALS		DATE
DRAWN	A. GAYTAN	02/11/22
CHECKED	F. FAUR	02/14/22
QC		

MATERIAL ANALYSIS NUMBER: N/A

DATE ANALYSIS PERFORMED: N/A

waukesha
9011 GOVERNORS ROW DALLAS, TEXAS 75247

TITLE
84 RAISE & LOWER CONTACTOR REPLACEMENT KIT

SIZE	SCALE	DWG. NO.	REV.
B	0.750	1030-2152K	A

MATERIAL: SEE PARTS LIST

SHEET 1 of 1

COMPANY AND PROPRIETARY: This document contains proprietary information of Prolec-GE Waukesha, Inc. ("Waukesha") and may not be disclosed, copied, modified or used without the written permission of Waukesha. If Waukesha has authorized your possession and/or use of this document, Waukesha has granted you a limited, revocable license to use this document and the information in it only for purposes specified by Waukesha. The document must be promptly returned to Waukesha, after its use and/or upon demand by Waukesha. Any possession, disclosure, copying, modification or use not authorized by Waukesha, can constitute a violation of applicable law and be subject to severe penalties.
©2022 Prolec-GE Waukesha, Inc. All Rights Reserved.

EQUIPMENT TYPE / NO.: WAUKESHA UZD & ABB UZF

DWG. NO. 1030-459 | SH 1 | REV H

REVISIONS				
REV	DESCRIPTION	DATE	APPROVAL	
E	1. REDRAWN ON PRO/E DATA BASE PER ECR # 140211A	11/6/13	TL	JP
E1	1) ADDED EXPLODED VIEW FOR CLARITY PER ECR# 140703A	07/03/2014	AM	JP
F	ADD SAP # TO NOTES PER ECR # 140915A	09/18/14	SK	JP
G	1) BREAK OUT 1030-215 TO COMPONENTS PER ECR# 150617A	11/20/2015	AM	JP
H	1) CONDENSE 1030-215 TO CALL ASSEMBLY PER ECR# 160105A	1/5/2016	AM	JP
I	1) Replaced 1030-215 with its components 2) UPDATED NOTES 3) ADDED 1.260 DIMENSION PER ECR # 210923A	09/27/21	KM	JP

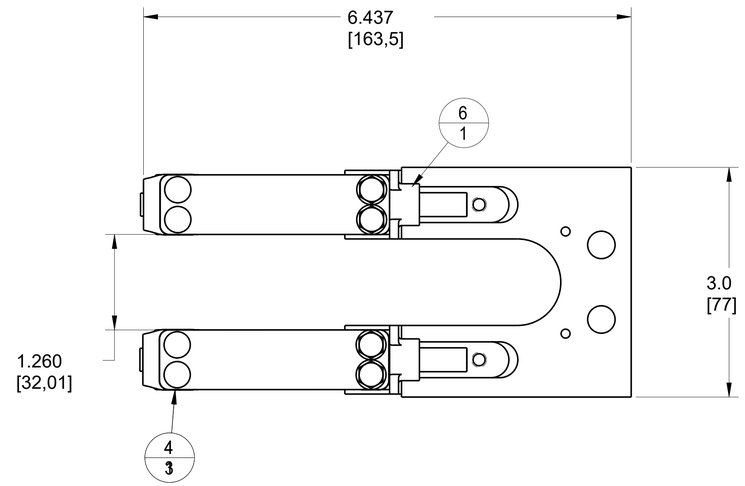

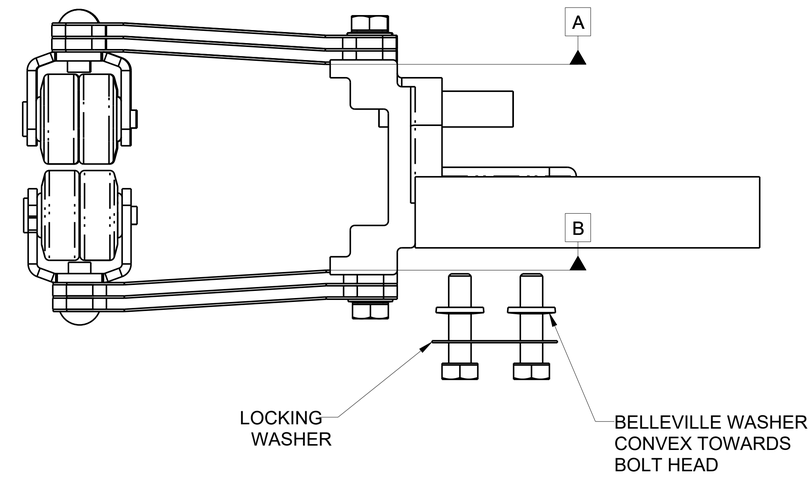

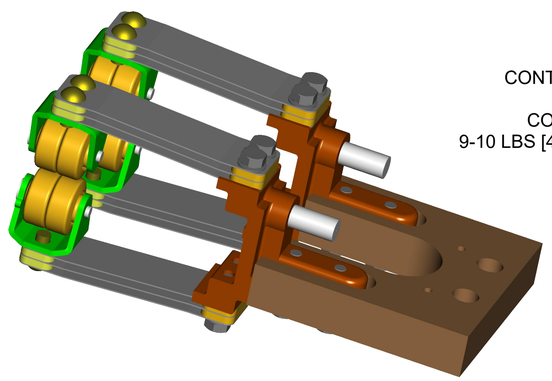

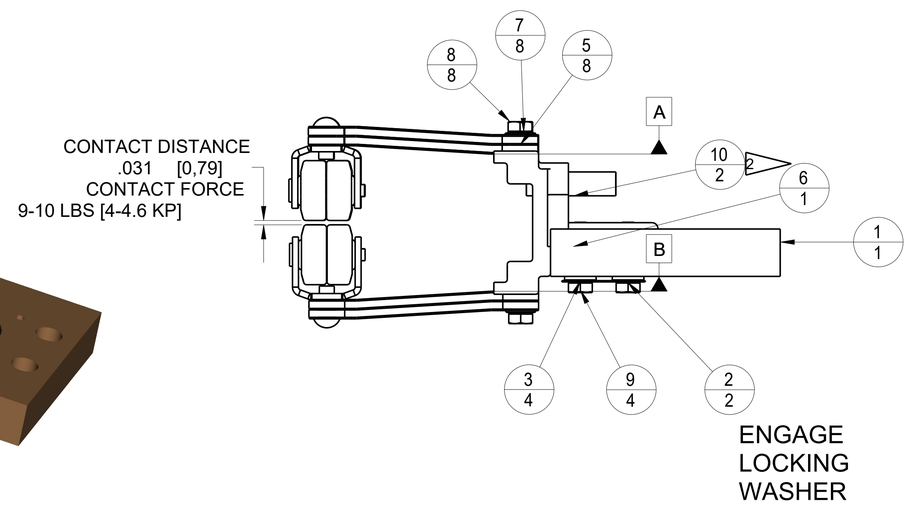

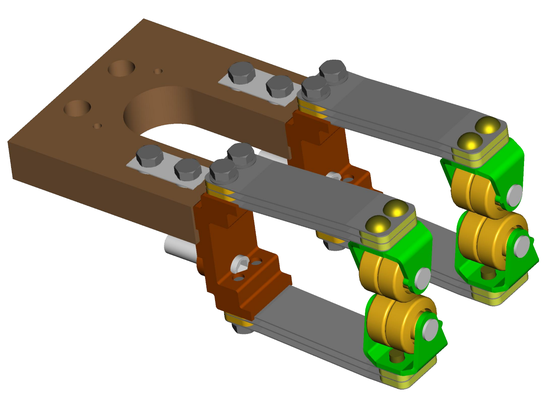

QTY	DRAWING NO.	TITLE	ITEM NO.
2	8010-197-411	SETSCREW, SOCKET, CUP POINT, M8 X 1.25 X 30MM LG, STAINLESS STEEL	10
4	8010-115-511	SCREW, HEX HEAD METRIC M5X.8X20 LG, CAD-ZN ST	9
8	8010-115-509	SCREW, HEX HEAD METRIC M5X.8X16 LG, CAD-ZN ST	8
8	8010-101-24	WASHER, BELLEVILLE HIGH CARBON STEEL, .204ID X .394OD	7
2	1030-225	MOUNT, ROLLER CONTACT	6
8	1030-222	2 HOLES SPACER	5
4	1030-217	ROLLER ASSEMBLY	4
4	1030-216	WASHER, BELLEVILLE .421 OD X .218 ID	3
2	1030-213	2 HOLES, WASHER	2
1	1030-212	MOUNTING PLATE	1

PARTS LIST

NEXT ASSY
1030-027K-OEM

SOURCE: (M/P) M | HVS MATERIAL CODE: | QTY. OF MATERIAL:

© Prolec-GE Waukesha, Inc. All rights reserved.

UNLESS OTHERWISE SPECIFIED DIMENSIONS ARE IN INCHES
TOLERANCE ARE
FRACTIONS DECIMALS ANGLES
.XX ± .01 X° ± 1°
.XXX ± .005
DO NOT SCALE DRAWING

DRC / ECR NUMBER:

APPROVALS	DATE
DRAWN T. LY	11/6/13
CHECKED	
QC	

MATERIAL ANALYSIS NUMBER:

DATE ANALYSIS PERFORMED:

COMPANY AND PROPRIETARY: This document contains proprietary information of Prolec-GE Waukesha, Inc. ("Waukesha") and may not be disclosed, copied, modified or used without the express written consent of Waukesha. Unauthorized use of this document or the information it contains for purposes other than those specified by Waukesha, or for any purpose not specified by Waukesha, after its use and/or upon demand by Waukesha, its possession, disclosure, copying, modification or use not authorized by Waukesha, can constitute a violation of applicable law and be subject to severe penalties.
©2007 Prolec-GE Waukesha, Inc. All Rights Reserved.

waukesha
9011 GOVERNORS ROW DALLAS, TEXAS 75247

TITLE: CONTACT ASSEMBLY RESISTOR

SIZE	SCALE	DWG. NO.	REV.
D	1.000	1030-459	H

MATERIAL: SEE PARTS LIST

SHEET 1 of 1

EQUIPMENT TYPE / NO.: WAUKESHA UZD & ABB UZF

DWG. NO. 1030-214P | SH 1 | REV N

REVISIONS				
REV	DESCRIPTION	DATE	APPROVAL	
L	1. REDRAWN ON PRO/E DATA BASE PER ECR # 140211A	11/7/13	TL	JP
M	ADD SAP # TO NOTES PER ECR # 140915B	09/18/14	SK	JP
N	1. REMOVED "FLARE ENDS" NOTE PER ECR# 200123B	01/23/20	SK	JP

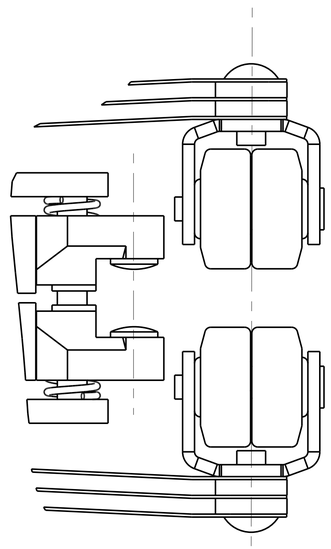

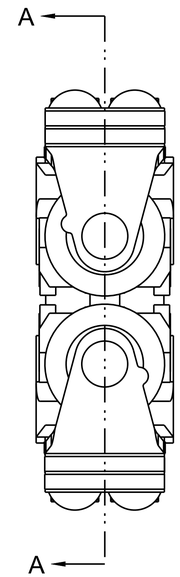

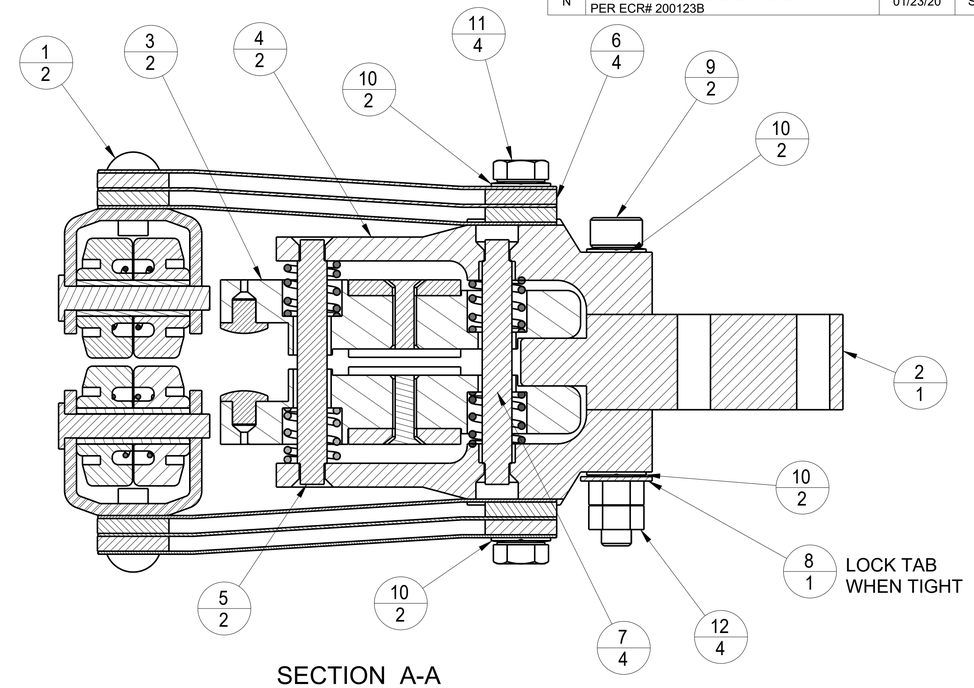

SECTION A-A

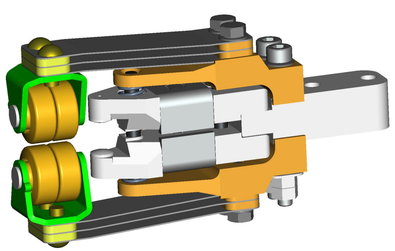

SCALE 1.000

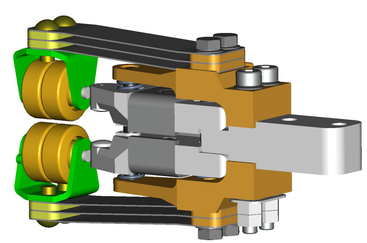

SCALE 1.000

QTY	DRAWING NO.	TITLE	ITEM NO.
4	8010-188-06	NUT, PLAIN HEX M5X.8	12
4	8010-115-509	SCREW, HEX HEAD METRIC M5X.8X16 LG, CAD-ZN ST	11
8	8010-101-24	WASHER, BELLEVILLE HCS, .204ID X .394OD	10
2	8010-099-518	SCREW, SHD,STEEL, M5 X 0.8 X 50 LG.	9
1	1030-224	WASHER, 2 HOLES	8
4	1030-223	CONTACT, ARM ASSEMBLY	7
4	1030-222	2 HOLES SPACER	6
2	1030-221	SHAFT, CONTACT	5
2	1030-220	ARM, RETAINING	4
2	1030-219P	CONTACT ASSEMBLY	3
1	1030-218P	CONTACT, COLLECTOR	2
2	1030-217	ROLLER ASSEMBLY	1

PARTS LIST

NEXT ASSY
1030-203P
1030-027K-OEM

SOURCE: (M/P) P | HVS MATERIAL CODE: | QTY. OF MATERIAL:

© Prolec-GE Waukesha, Inc. All rights reserved.

UNLESS OTHERWISE SPECIFIED
DIMENSIONS ARE IN INCHES
TOLERANCE ARE
FRACTIONS DECIMALS ANGLES
.XX ± .01 X° ± 1°
.XXX ± .005
DO NOT SCALE DRAWING

DRC / ECR NUMBER:

APPROVALS	DATE
DRAWN T. LY	11/7/13
CHECKED	
QC	

MATERIAL ANALYSIS NUMBER:

DATE ANALYSIS PERFORMED:

waukesha
9011 GOVERNORS ROW DALLAS, TEXAS 75247

TITLE: CONTACT ARM ASSEMBLY

SIZE D | SCALE 2.000 | DWG. NO. 1030-214P | REV. N

MATERIAL: SEE PARTS LIST | SHEET 1 of 1

COMPANY AND PROPRIETARY: This document contains proprietary information of Prolec-GE Waukesha, Inc. ("Waukesha") and may not be disclosed, copied, modified or used without the express written consent of Waukesha. Unauthorized use of this document or the information in it may violate trade secret, proprietary and other intellectual property rights of Waukesha, its affiliates and its licensors, and the information in it may be used only for purposes specified by Waukesha. This document must be promptly returned to Waukesha, after its use and/or upon demand by Waukesha. Any possession, disclosure, copying, modification or use not authorized by Waukesha, can constitute a violation of applicable law and be subject to severe penalties.
Copyright © Waukesha, Inc. All Rights Reserved.

EQUIPMENT TYPE / NO.

WAUKESHA UZD

DWG. NO.	SH	REV.
1030-478P	1	H

REVISIONS

LTR	REVISION	DATE	APPROVAL	
G	1. REDRAWN ON PRO/E DATA BASE PER ECR# 140219A	11/14/13	TL	JP
H	1. 1030-482N,-483N,-484N WERE 1030-482,-483,-484 PER ECR # 150522A	05/26/15	SK	JP

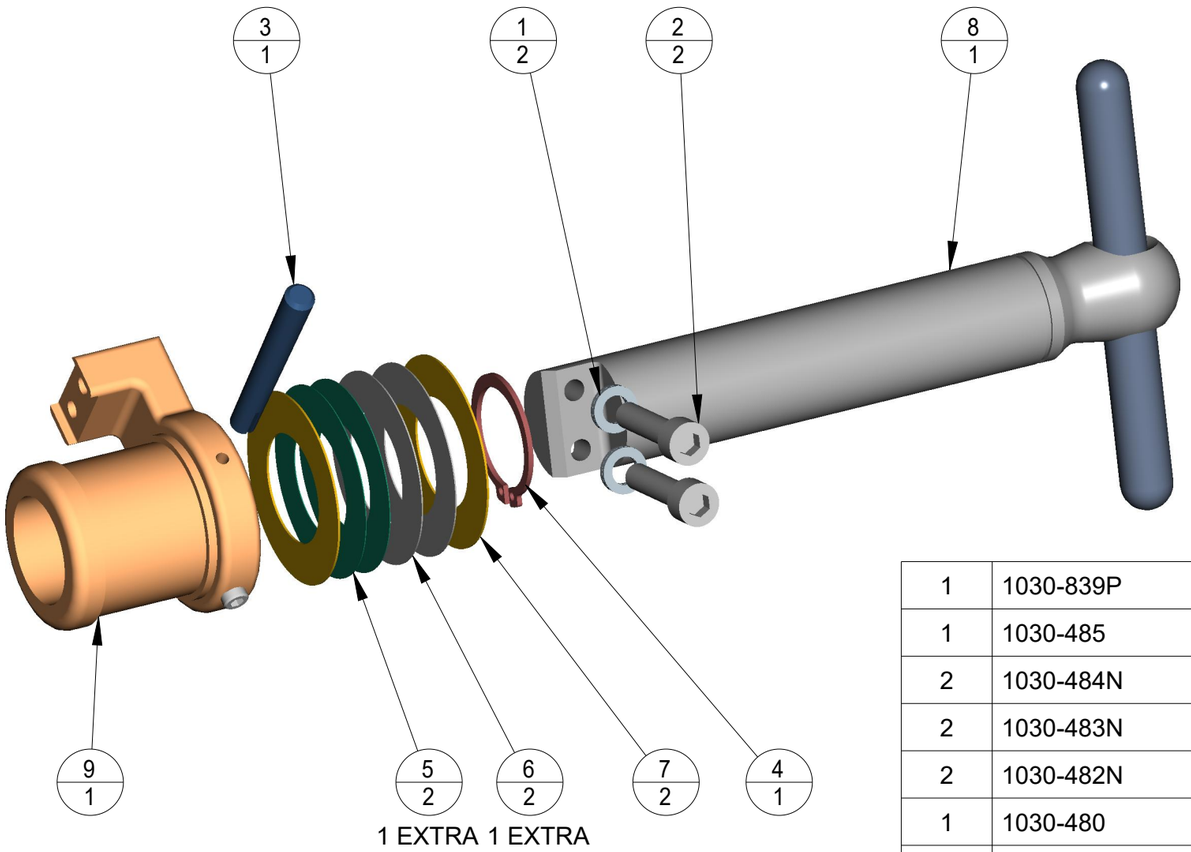

QTY	DRAWING NO.	TITLE	ITEM NO.
1	1030-839P	CONTACT ASSEMBLY ARM	9
1	1030-485	SHAFT ASSEMBLY, LONG	8
2	1030-484N	SHIM, 0.5MM WASHER	7
2	1030-483N	SHIM, 0.32MM WASHER	6
2	1030-482N	SHIM, 0.2MM WASHER	5
1	1030-480	RETAINING RING	4
1	1030-479	SLOTTED TAPER PIN	3
2	1030-1189	SCREW, SCH M6X1X25LG DIN 912-12.9	2
2	1030-1188	NORD-LOCK, LOCKING WASHER	1

PARTS LIST

NEXT ASSY
1030-1730K

SOURCE: (M/P) P

HVS MATERIAL CODE:

QTY. OF MATERIAL:

© Prolec-GE Waukesha, Inc. All rights reserved.

UNLESS OTHERWISE SPECIFIED
DIMENSIONS ARE IN INCHES
TOLERANCE ARE
FRACTIONS DECIMALS ANGLES
.XX ± .01 X° ± 1°
.XXX ± .005
DO NOT SCALE DRAWING

DRC / ECR NUMBER: #031601A

waukesha
9011 GOVERNORS ROW DALLAS, TEXAS 75247

MATERIAL ANALYSIS NUMBER:

DATE ANALYSIS PERFORMED:

APPROVALS	DATE
DRAWN T. LY	11/14/13
CHECKED	
QC	

TITLE: CONTACT ARM ASSEMBLY

SIZE	SCALE	DWG. NO.	REV.
B	0.750	1030-478P	H

MATERIAL: SEE PARTS LIST

SHEET 1 of 1

COMPANY AND PROPRIETARY: This document contains proprietary information of Prolec-GE Waukesha, Inc. ("Waukesha") and may not be disclosed, copied, modified or used without the written permission of Waukesha. If Waukesha has authorized your possession and/or use of this document, Waukesha has granted you a limited, revocable license to use this document and the information in it only for purposes specified by Waukesha. The document must be promptly returned to Waukesha, after its use and/or upon demand by Waukesha. Any possession, disclosure, copying, modification or use not authorized by Waukesha, can constitute a violation of applicable law and be subject to severe penalties.
©2022 Prolec-GE Waukesha, Inc. All Rights Reserved.

EQUIPMENT TYPE / NO.

WAUKESHA UZD

DWG. NO.	SH	REV.
1030-468	1	G

REVISIONS

LTR	REVISION	DATE	APPROVAL	
G	1. REDRAWN ON PRO/E DATA BASE PER ECR 140221B	3/13/14	TL	JP

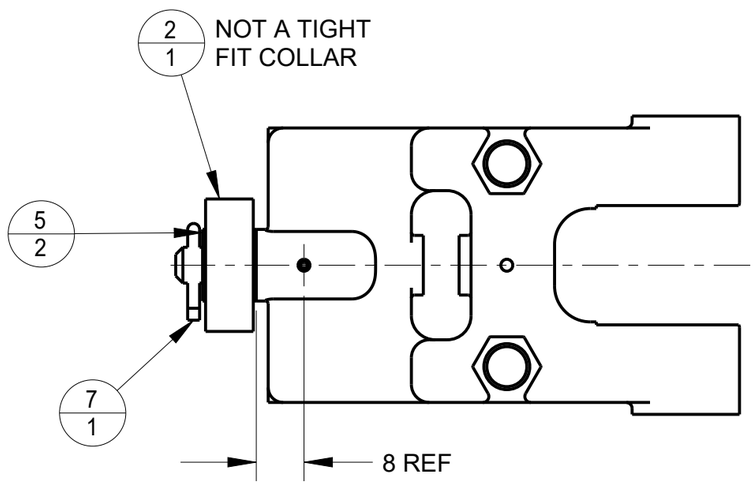

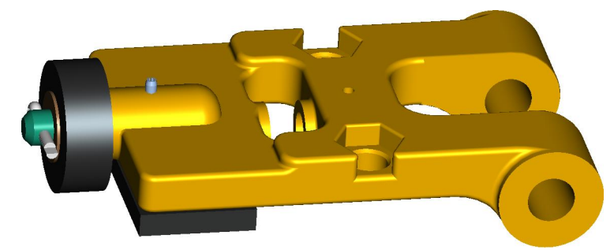

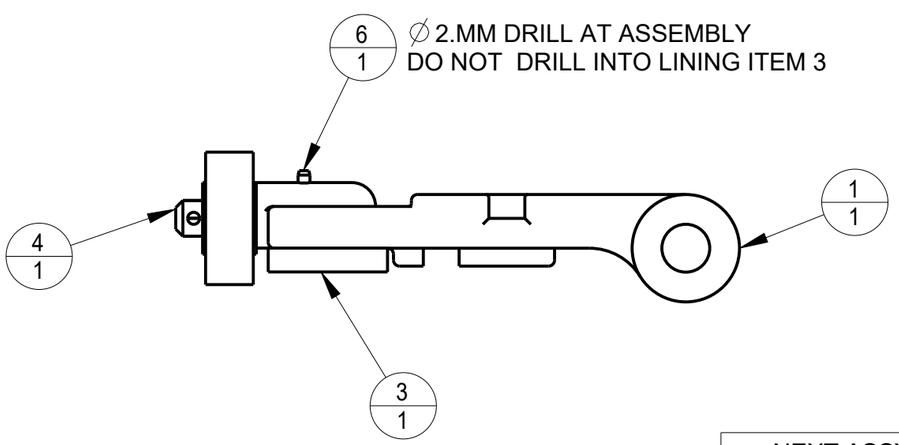

QTY	DRAWING NO.	TITLE	ITEM NO.
1	8010-200-103	PIN, COTTER STEEL M2 X 12 LG	7
1	8010-168-04	PIN, METRIC 2MM X 12MM	6
2	1030-508	WASHER, UZD BRAKE	5
1	1030-506	BRAKE SHOE, PIN	4
1	1030-471	BRAKE LINING, LTC-UZD-SPRING DR. GROUP	3
1	1030-470	ROLLER ASSEMBLY	2
1	1030-469	BRAKE SHOE, LTC-UZD SPRING DR. GROUP	1

PARTS LIST

NEXT ASSY
1030-042K

SOURCE: (M/P) P

HVS MATERIAL CODE:

QTY. OF MATERIAL:

© Prolec-GE Waukesha, Inc. All rights reserved.

UNLESS OTHERWISE SPECIFIED
DIMENSIONS ARE IN INCHES
TOLERANCE ARE
FRACTIONS DECIMALS ANGLES
.XX ± .01 X° ± 1°
.XXX ± .005
DO NOT SCALE DRAWING

DRC / ECR NUMBER:

waukesha
9011 GOVERNORS ROW DALLAS, TEXAS 75247

APPROVALS		DATE
DRAWN	T. LY	3/13/14
CHECKED		
QC		

MATERIAL ANALYSIS NUMBER:

DATE ANALYSIS PERFORMED:

TITLE
BRAKE ASSEMBLY UZD

SIZE	SCALE	DWG. NO.	REV.
B	1.000	1030-468	G

MATERIAL: SEE PARTS LIST

SHEET 1 of 1

COMPANY AND PROPRIETARY: This document contains proprietary information of Prolec-GE Waukesha, Inc. ("Waukesha") and may not be disclosed, copied, modified or used without the written permission of Waukesha. If Waukesha has authorized your possession and/or use of this document, Waukesha has granted you a limited, revocable license to use this document and the information in it only for purposes specified by Waukesha. The document must be promptly returned to Waukesha, after its use and/or upon demand by Waukesha. Any possession, disclosure, copying, modification or use not authorized by Waukesha, can constitute a violation of applicable law and be subject to severe penalties.
©2022 Prolec-GE Waukesha, Inc. All Rights Reserved.

EQUIPMENT TYPE / NO. UZD

DWG. NO. 1030-1191 | SH 1 | REV. F

REVISIONS

LTR	REVISION	DATE	APPROVAL	
B	1) REDRAWN ON PRO-E DATA BASE PER ECR# 140205A	2/10/2014	TL	JP
B1	1) ADD SAP# TO NOTES PER ECR# 140903A	09/04/2014	SK	JP
C	1) CREATED ASSM. DRW W/CONTACT PER ECR# 141031A	10/31/2014	AM	JP
D	1) ADD I.D. DIM. W/ TOLERANCE PER ECR# 180502B	5/2/2018	AM	JP
E	1. ADDED SETSCREW PER ECR #190424A	4/24/19	TL	JP
F	1. CHANGE SET SCREW F:1030-2068 TO 8010-197-411 PER ECR #200102B	1/3/20	TL	JP

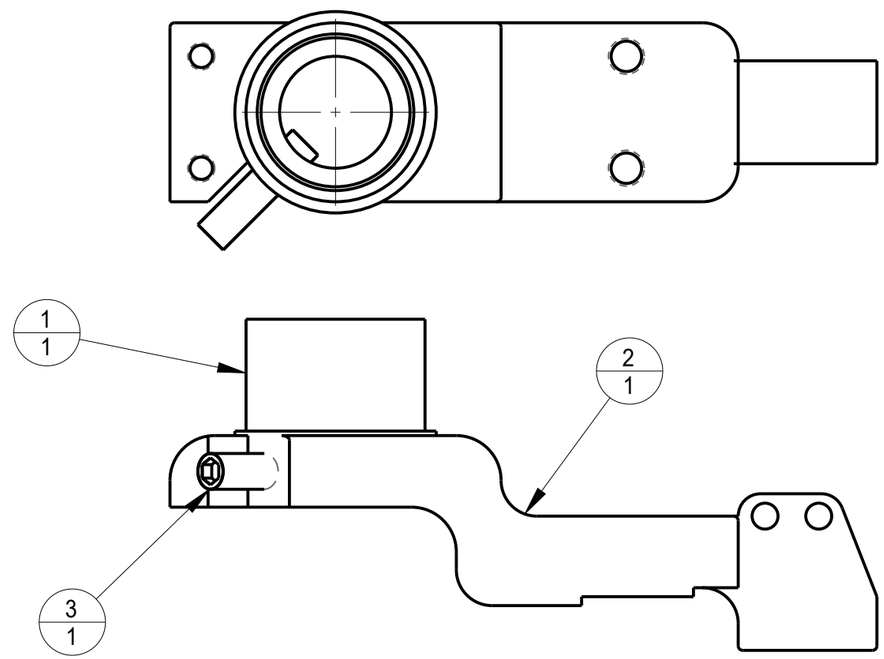

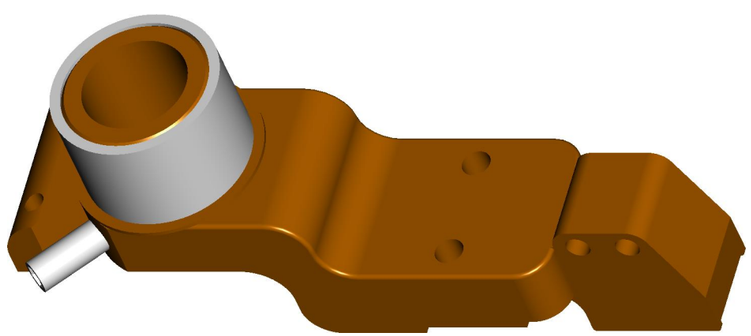

QTY	DRAWING NO.	TITLE	ITEM NO.
1	8010-197-411	SETSCREW, SOCKET, CUP POINT, M8 X 1.25 X 30MM LG, SS	3
1	1030-1191-002	CONTACT ARM, UPPER, SAP# 2004210	2
1	1030-1191-001	CONTACT, SAP# 2004211	1

PARTS LIST

NEXT ASSY
1030-1726K

SOURCE: (M/P) M | HVS MATERIAL CODE: | QTY. OF MATERIAL:

© Prolec-GE Waukesha, Inc. All rights reserved.

UNLESS OTHERWISE SPECIFIED
DIMENSIONS ARE IN INCHES
TOLERANCE ARE
FRACTIONS DECIMALS ANGLES
.XX ± .01 X° ± 1°
.XXX ± .005
DO NOT SCALE DRAWING

DRC / ECR NUMBER: ECR3 141031A

waukesha
9011 GOVERNORS ROW DALLAS, TEXAS 75247

APPROVALS	DATE
DRAWN A. MARTIN	10/31/2014
CHECKED	
QC	

MATERIAL ANALYSIS NUMBER:

DATE ANALYSIS PERFORMED:

TITLE CONTACT ARM UPPER ASSEMBLY

SIZE B | SCALE 0.750 | DWG. NO. 1030-1191 | REV. F

MATERIAL SEE NOTES | SHEET 1 of 1

COMPANY AND PROPRIETARY: This document contains proprietary information of Prolec-GE Waukesha, Inc. ("Waukesha") and may not be disclosed, copied, modified or used without the written permission of Waukesha. If Waukesha has authorized your possession and/or use of this document, Waukesha has granted you a limited, revocable license to use this document and the information in it only for purposes specified by Waukesha. The document must be promptly returned to Waukesha, after its use and/or upon demand by Waukesha. Any possession, disclosure, copying, modification or use not authorized by Waukesha, can constitute a violation of applicable law and be subject to severe penalties.
©2022 Prolec-GE Waukesha, Inc. All Rights Reserved.

EQUIPMENT TYPE / NO.
WAUKESHA UZD, ABB UZE, & ABB UZF

DWG. NO. 1030-217 | SH 1 | REV. K

REVISIONS

LTR	REVISION	DATE	APPROVAL	
J	1. REDRAWN ON PRO/E DATA BASE PER ECR # 140213C	10/31/13	TL	JP
K	ADD SAP # TO NOTES PER ECR # 140915C	09/18/14	SK	JP
L	1) ADDED PRT 1030-229, OVERLOOKED IN PRO-E REDRAW 2) SYNC GSS AND DRW REV PER ECR # 180629A	06-29-18	TA	JP

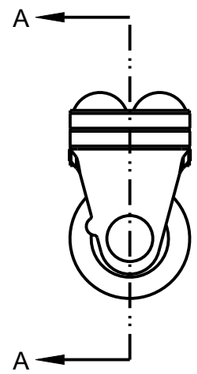

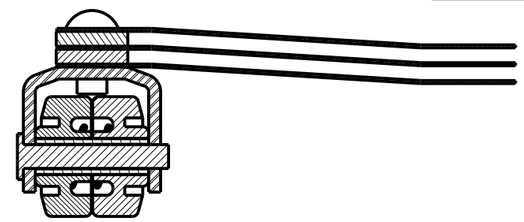

SECTION A-A

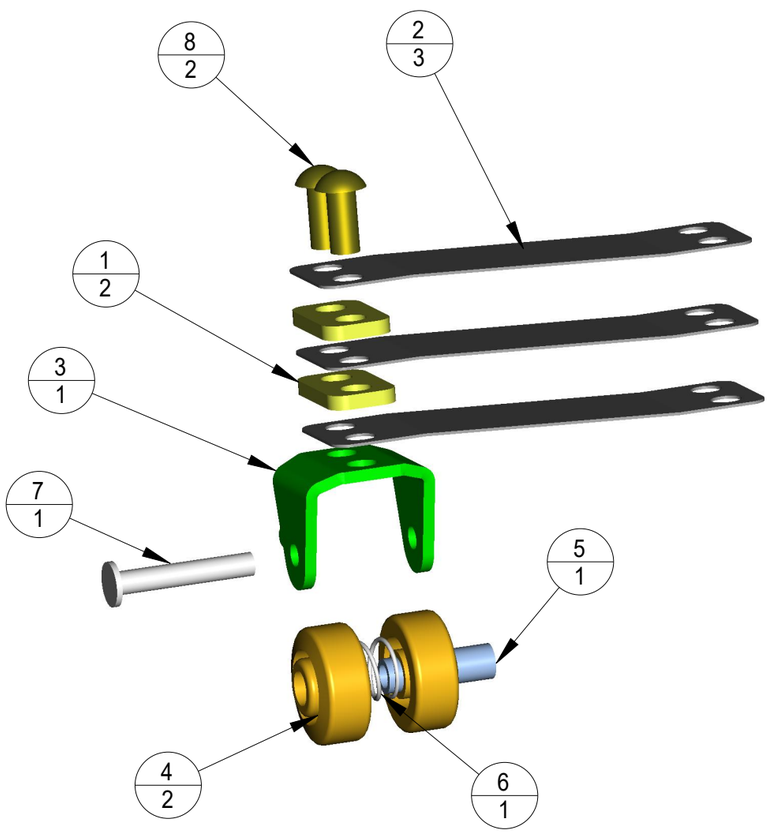

QTY	DRAWING NO.	TITLE	ITEM NO.
2	8010-277-405	METRIC RD HD RIVET 5MM X 14MM	8
1	8010-276-308	METRIC FLAT HEAD RIVET, STEEL, 4MM X 26MM	7
1	1030-230	SPRING, SEPARATOR ROLLER	6
1	1030-229	SPACER, ROLLER	5
2	1030-228	ROLLER, CONTECT	4
1	1030-227	MOUNT, ROLLER	3
3	1030-226	SPRING, ROLLER	2
2	1030-222	2 HOLES SPACER	1

PARTS LIST

NEXT ASSY
1030-026K
1000-163
1000-157P
1030-214P
1030-215

SOURCE: (M/P) P | HVS MATERIAL CODE: | QTY. OF MATERIAL:

© Prolec-GE Waukesha, Inc. All rights reserved.

UNLESS OTHERWISE SPECIFIED DIMENSIONS ARE IN INCHES TOLERANCE ARE
FRACTIONS DECIMALS ANGLES
.XX ± .01 X° ± 1°
.XXX ± .005
DO NOT SCALE DRAWING

DRC / ECR NUMBER:

MATERIAL ANALYSIS NUMBER:

DATE ANALYSIS PERFORMED:

APPROVALS	DATE
DRAWN T. LY	10/31/13
CHECKED	
QC	

waukesha
9011 GOVERNORS ROW DALLAS, TEXAS 75247

TITLE ROLLER ASSEMBLY

SIZE B | SCALE 1.000 | DWG. NO. 1030-217 | REV. K

MATERIAL SEE PARTS LIST | SHEET 1 of 1

COMPANY AND PROPRIETARY: This document contains proprietary information of Prolec-GE Waukesha, Inc. ("Waukesha") and may not be disclosed, copied, modified or used without the written permission of Waukesha. If Waukesha has authorized your possession and/or use of this document, Waukesha has granted you a limited, revocable license to use this document and the information in it only for purposes specified by Waukesha. The document must be promptly returned to Waukesha, after its use and/or upon demand by Waukesha. Any possession, disclosure, copying, modification or use not authorized by Waukesha, can constitute a violation of applicable law and be subject to severe penalties.
©2022 Prolec-GE Waukesha, Inc. All Rights Reserved.

EQUIPMENT TYPE / NO.: WAUKESHA UZD

DWG. NO.: 1030-371P | SH: 1 | REV: P1

REVISIONS				
REV	DESCRIPTION	DATE	APPROVAL	
M	1. REDRAWN ON PRO/E DATA BASE PER ECR # 140203A	10/30/13	TL	JP
N	1) REM NOTE "PURCHASE FROM SPX WAUKESHA" 2) ADD DETAIL A 3) RENAME OLD DETAIL "A" TO "B" 4) ADD "MAINTAIN GAP" NOTE PER ECR# 140217A	02/18/2014	AM	JP
P	1) REMOVE "ALL DIMENSIONS ARE REF." NOTE PER ECR# 140516B	06/24/2014	AM	JP
P1	1. THE UNIT IN NOTE # 2 WAS IN.LBS PER ER # 170306C	03/06/17	SK	JP

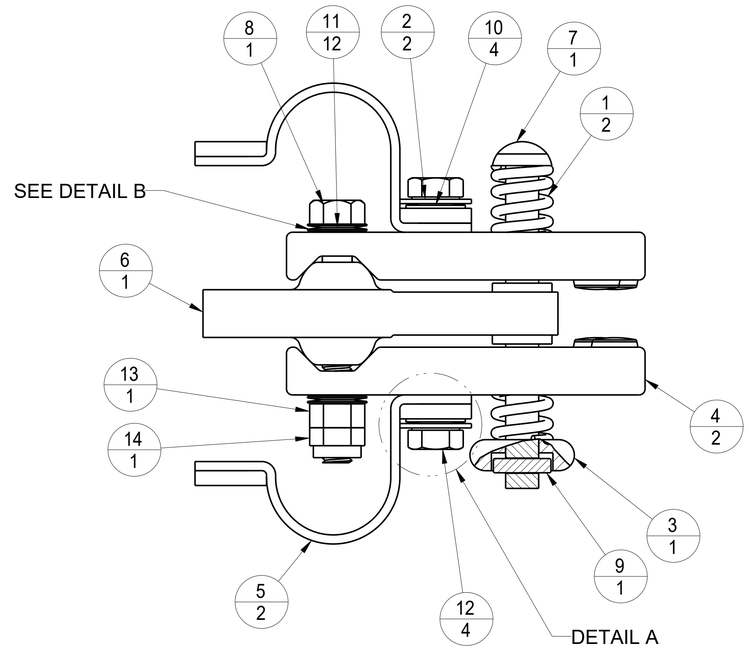

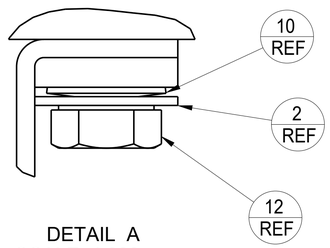

DETAIL A
SCALE 4.000

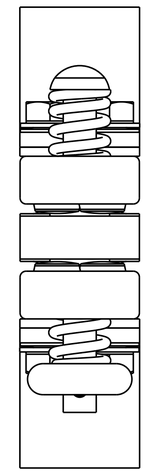

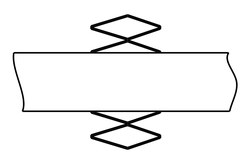

DETAIL B

QTY	DRAWING NO.	TITLE	ITEM NO.
1	8010-193-06	NUT, LOCKING, NYLON INSERT S.S. M5X.8	14
1	8010-188-06	NUT, PLAIN HEX M5X.8	13
4	8010-115-507	SCREW, HEX HD METRIC M5X.8X12 LG, CAD-ZN ST	12
12	8010-101-25	WASHER, BELLEVILLE HCS, .204ID X .394OD	11
4	8010-101-24	WASHER, BELLEVILLE HCS, .204ID X .394OD	10
1	8010-093-105	PIN, DOWEL, CH., ALLOY SL. 3/32X.38 LG	9
1	1030-872	SCREW, HEX HEAD M5X.8X40 LG	8
1	1030-771	MODIFIED RIVET	7
1	1030-378P	TONGUE, CONTACT	6
2	1030-376	BRAIDED, CONTACT	5
2	1030-373P	CONTACT ASSEMBLY	4
1	1030-372	FERRULE, UZD	3
2	1030-224	WASHER, 2 HOLES	2
2	1030-071	COMPRESSION, SPRING	1

PARTS LIST

NEXT ASSY
1030-017K
1030-021K
1030-1725K-COMED

SOURCE: (M/P): P
HVS MATERIAL CODE:
QTY. OF MATERIAL:

UNLESS OTHERWISE SPECIFIED DIMENSIONS ARE IN INCHES
TOLERANCE ARE
FRACTIONS DECIMALS ANGLES
.XX ± .01 X° ± 1°
.XXX ± .005
DO NOT SCALE DRAWING

MATERIAL ANALYSIS NUMBER:
DATE ANALYSIS PERFORMED:

DRC / ECR NUMBER:

APPROVALS	DATE
DRAWN T. LY	10/30/13
CHECKED	
QC	

© Prolec-GE Waukesha, Inc. All rights reserved.

waukesha
9011 GOVERNORS ROW DALLAS, TEXAS 75247

TITLE: MOVING REV. CHANGEOVER SEL. SW. ASSEMBLY

SIZE: D | SCALE: 2.000 | DWG. NO.: 1030-371P | REV: P1

MATERIAL: SEE PARTS LIST | SHEET: 1 of 1

COMPANY AND PROPRIETARY: This document contains proprietary information of Prolec-GE Waukesha, Inc. ("Waukesha") and may not be disclosed, copied, modified or used without the express written consent of Waukesha. Any unauthorized use or disclosure violates the rights of Waukesha and its affiliates and subsidiaries, and may be prosecuted to the fullest extent of the law. This document must be promptly returned to Waukesha, after its use and/or upon demand by Waukesha. Any possession, and the information it contains, by any person or entity other than Waukesha or its affiliates and subsidiaries, can constitute a violation of applicable law and be subject to severe penalties.
©2022 Prolec-GE Waukesha, Inc. All Rights Reserved.

EQUIPMENT TYPE / NO.: WAUKESHA UZD

DWG. NO.: 1030-1756 | SH: 1 | REV.: E

REVISIONS

REV	DESCRIPTION	DATE	APPROVAL	
A	1. NEW DRAWING CREATED PER DRC#111612A	11/21/13	TL	JP
B	1. ADDED CASE TO KIT PER ECR #140627A	6/30/14	TL	JP
B1	1. PICTURAL CHANGES EFFECTED BY 1030-1729 PER ECR:171213A	12/15/17	TL	JP
C	1. UP-DATE TO CURRENT DESIGN PER ECR #190215C	2/19/19	TL	JP
D	1. UP-DATE BOM IN DRAWING AND GSS PER ECR #190402B	4/3/19	TL	JP
E	REMOVE P/N LABELS PER ECR #210315A	03/15/21	AG	JP

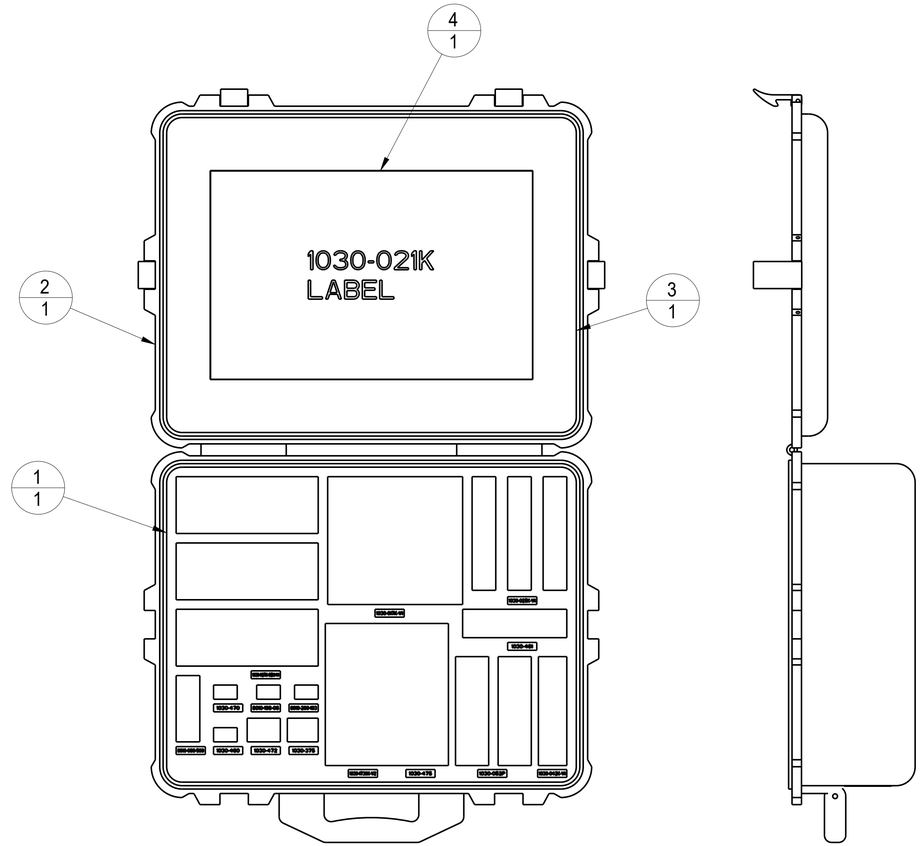

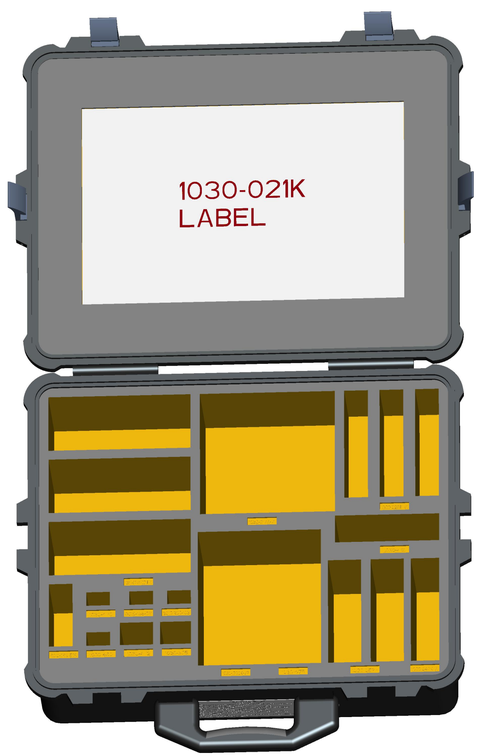

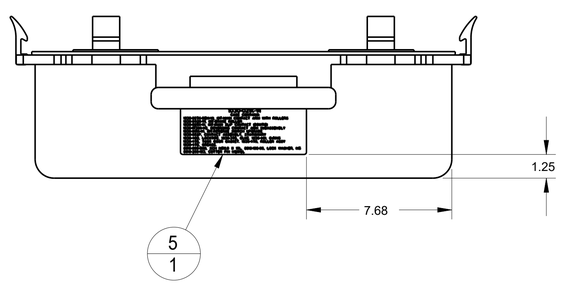

QTY	DRAWING NO.	TITLE	ITEM NO.
1	1030-1731	LABEL, OUTER CASE	5
1	1030-1733	LABEL, COVER FOAM INSERT FOR UZD 1030-021K	4
1	2000-1456	FOAM INSERT COVER, (PART OF CASE)	3
1	1030-1693	CASE, PELICAN STANDARD (W/CUSTOM FOAM)	2
1	1030-1729	BOTTOM FOAM INSERT, 1030-021K-V1	1

PARTS LIST

NEXT ASSY

SOURCE: (M/P) P | HVS MATERIAL CODE: | QTY. OF MATERIAL:

UNLESS OTHERWISE SPECIFIED DIMENSIONS ARE IN INCHES TOLERANCE ARE FRACTIONS DECIMALS ANGLES .XX ± .01 .XXX ± .005 X° ± 1°

DO NOT SCALE DRAWING

MATERIAL ANALYSIS NUMBER:

DATE ANALYSIS PERFORMED:

DRC / ECR NUMBER:

APPROVALS	DATE
DRAWN T. LY	11/21/13
CHECKED A. GAYTAN	03/12/21
QC	

© Prolec-GE Waukesha, Inc. All rights reserved.

waukesha
9011 GOVERNORS ROW DALLAS, TEXAS 75247

TITLE: STANDARD PELICAN CASE ASSEMBLY FOR 1030-021K-V1

SIZE: D | SCALE: 0.250 | DWG. NO.: 1030-1756 | REV.: E

MATERIAL: SEE PARTS LIST | SHEET: 1 of 1

COMPANY AND PROPRIETARY: This document contains proprietary information of Prolec-GE Waukesha, Inc. ("Waukesha") and may not be disclosed, copied, modified or used without the express written consent of Waukesha. Recipient agrees to return this document upon request by Waukesha. Recipient agrees to use this document only for the purposes specified by Waukesha, and the information it is for) for purposes specified by Waukesha. The document must be promptly returned to Waukesha, after its use and/or upon demand by Waukesha. Any possession, disclosure, copying, modification or use not authorized by Waukesha, can constitute a violation of applicable law and be subject to severe penalties.
©2007 Prolec-GE Waukesha, Inc. All Rights Reserved.

EQUIPMENT TYPE / NO.	DWG. NO.	SH	REV.
UZD	1030-2054	1	C1

REVISIONS				
REV	DESCRIPTION	DATE	APPROVAL	
C	1. UP-DATED TO NEW VENDOR REQUIREMENT PER ECR# 201030A	10/30/20	TL	JP
C1	UPDATE VIEWS TO SHOW NEW FOAM PER ECR #220725B	07/25/22	AG	JP

NOTES:
1. THIS FOAM KIT HAS 1 CASE.

2 INCLUDED WITH FOAM CASE.

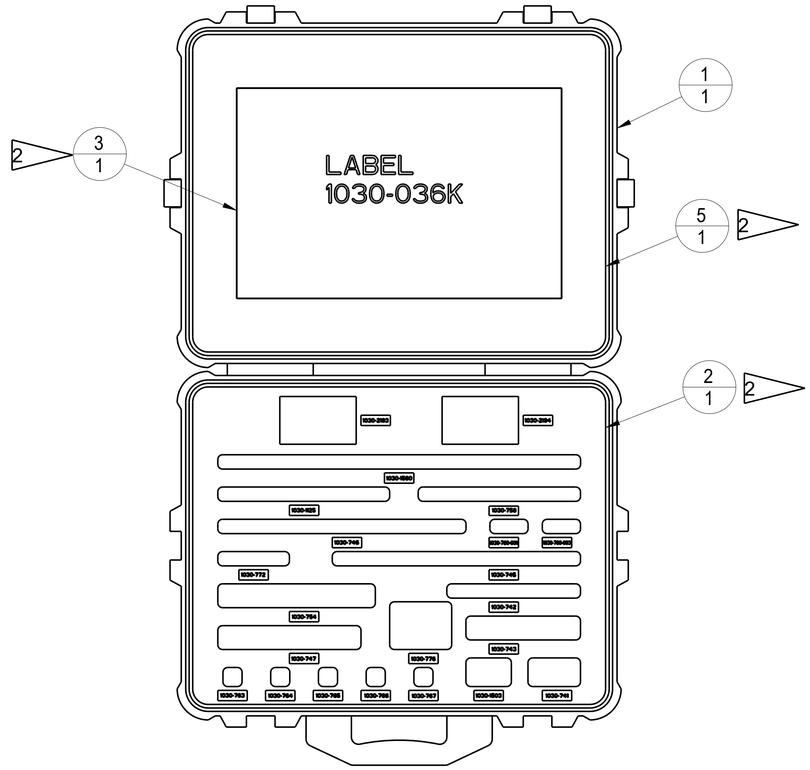

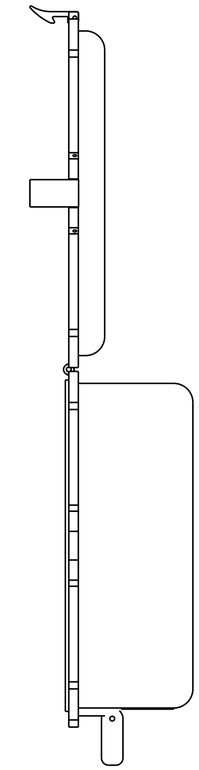

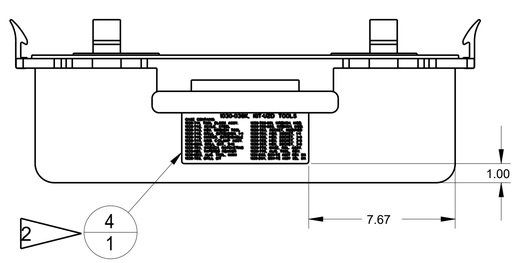

QTY	DRAWING NO.	TITLE	ITEM NO.
1	2000-1456	FOAM INSERT COVER, (PART OF CASE)	5
1	1030-2056	LABEL, OUTER CASE	4
1	1030-2055	LABLE, COVER FOAM INSERT	3
1	1030-2053	BOTTOM FOAM INSERT	2
1	1030-1693	CASE, PELICAN STANDARD (W/CUSTOM FOAM)	1

PARTS LIST

NEXT ASSY

SOURCE: (M/P) P
HVS MATERIAL CODE:
QTY. OF MATERIAL:

UNLESS OTHERWISE SPECIFIED DIMENSIONS ARE IN INCHES TOLERANCE ARE FRACTIONS DECIMALS ANGLES .XX ± .01 X° ± 1° .XXX ± .005 DO NOT SCALE DRAWING

DRC / ECR NUMBER:

MATERIAL ANALYSIS NUMBER:

DATE ANALYSIS PERFORMED:

APPROVALS	DATE
DRAWN T. LY	2/22/19
CHECKED SK	2/22/19
QC	

© Prolec-GE Waukesha, Inc. All rights reserved.

waukesha
9011 GOVERNORS ROW DALLAS, TEXAS 75247

TITLE
STANDARD PELICAN CASE W/CUSTOM FOAM FOR 1030-036K

SIZE	SCALE	DWG. NO.	REV.
D	0.252	1030-2054	C1

MATERIAL: SEE PARTS LIST
SHEET 1 of 1

COMPANY AND PROPRIETARY: This document contains proprietary information of Prolec-GE Waukesha, Inc. ("Waukesha") and may not be disclosed, copied, modified or used without the written permission of Waukesha. If Waukesha has authorized your possession and use of this document, Waukesha has granted you a limited, revocable license to use this document solely for the purpose for which it was provided by Waukesha. Unless otherwise expressly authorized by Waukesha in writing, any possession, use, modification, disclosure, copying, distribution or use not authorized by Waukesha, can constitute a violation of applicable law and be subject to severe penalties.
©2022 Prolec-GE Waukesha, Inc. All Rights Reserved.

EQUIPMENT TYPE / NO.: WAUAKESHA UZD

DWG. NO. 1030-718 | SH 1 | REV. C2

REVISIONS				
REV	DESCRIPTION	DATE	APPROVAL	
C1	1. REDRAWN IN PRO/E DATA BASE PER ECR # 150521A	5/28/15	TL	JP
C2	1) ADD SAP NUMBER PER ECR# 160419A	4/19/2016	AM	JP

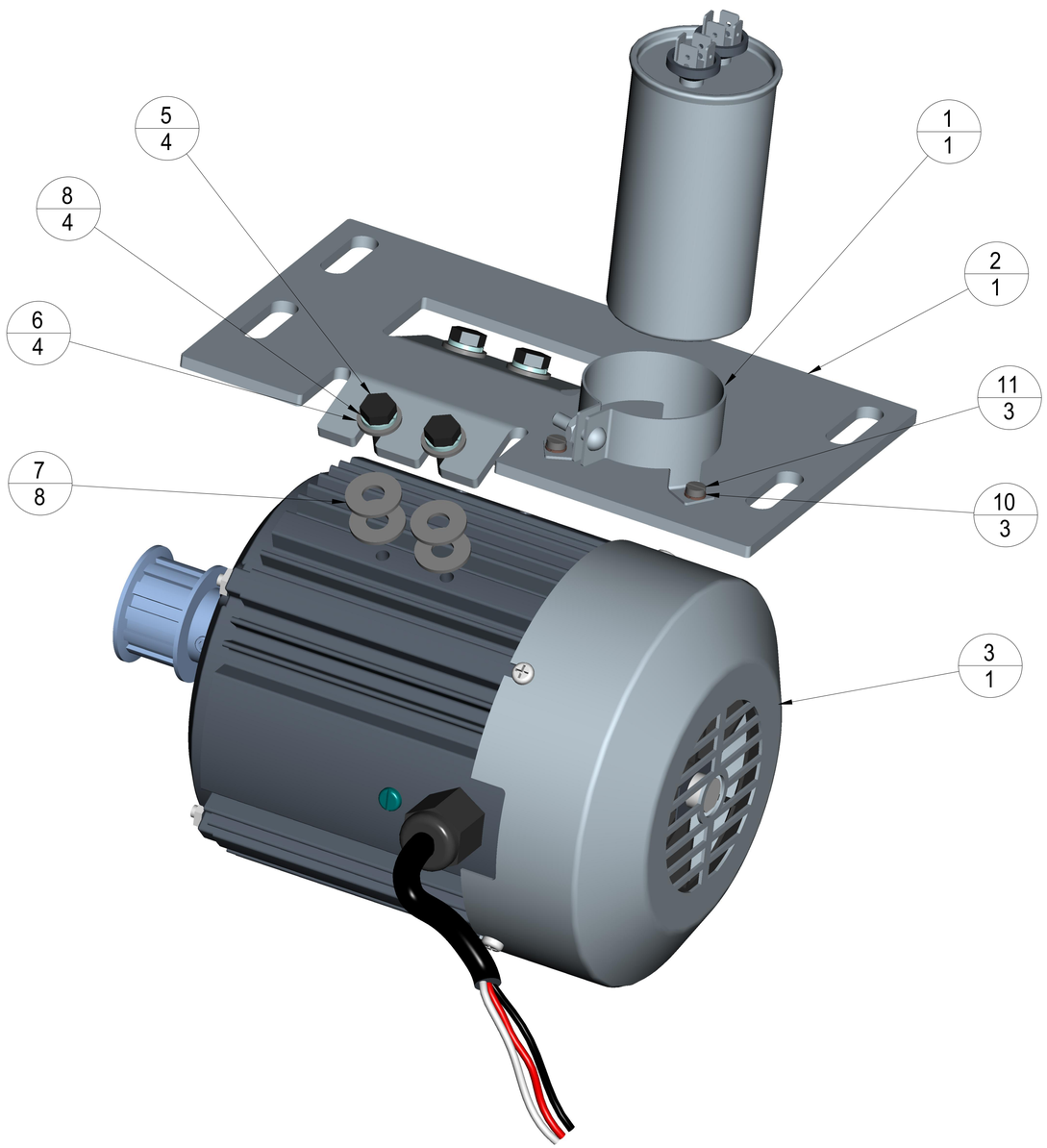

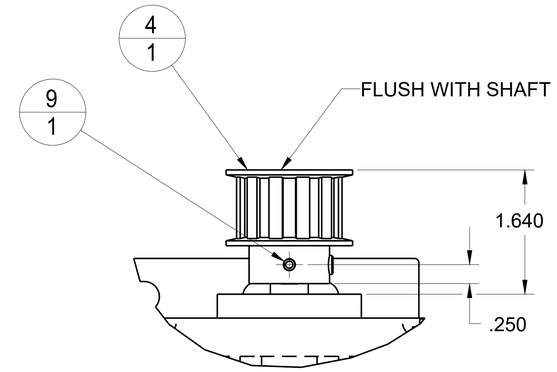

QTY	DRAWING NO.	TITLE	ITEM NO.
3	8010-212-305	SCREW, CHEESE HD METRIC M4 X 0.7 X 8 LG	11
3	8010-116-05	WASHER, LOCK METRIC M6	10
1	8010-072-515	SPRING PIN SLOTTED, STEEL 1.125X.156 DIA	9
4	8010-070-06	WASHER, LOCK, SCREW SIZE .25	8
8	8010-068-74	WASHER, FLAT, SL .312 IDx.781 ODx.060 THK	7
4	8010-068-06	WASHER, FLAT .281ID x .625 OD .062	6
4	8010-002-09	SCREW, HXHD, GD5, STL .25-20UNC, .75 LG	5
1	1030-836	GEAR, SMALL BELT, DRIVE (MODIFIED)	4
1	1030-831	MOTOR & CAPACITOR	3
1	1030-721	BRACKET, MOUNTING	2
1	1030-719	CAPACITOR, CLAMP	1

PARTS LIST

NEXT ASSY: 1030-031K

SOURCE: (M/P): M

HVS MATERIAL CODE:

QTY. OF MATERIAL:

© Prolec-GE Waukesha, Inc. All rights reserved.

UNLESS OTHERWISE SPECIFIED DIMENSIONS ARE IN INCHES
TOLERANCE ARE
FRACTIONS DECIMALS ANGLES
.XX ± .01 X° ± 1°
.XXX ± .005
DO NOT SCALE DRAWING

DRC / ECR NUMBER:

MATERIAL ANALYSIS NUMBER:

DATE ANALYSIS PERFORMED:

APPROVALS		DATE
DRAWN	TIM A	5/28/15
CHECKED	T. LY	5/28/15
QC		

waukesha
9011 GOVERNORS ROW DALLAS, TEXAS 75247

TITLE: MOTOR ASSEMBLY

SIZE	SCALE	DWG. NO.	REV.
D	1.000	1030-718	C2

MATERIAL: SEE PARTS LIST

SHEET 1 of 1

COMPANY AND PROPRIETARY: This document contains proprietary information of Prolec-GE Waukesha, Inc. ("Waukesha") and may not be disclosed, copied, modified or used without the written permission of Waukesha. If Waukesha has authorized your possession and/or use of this document, Waukesha has granted you a limited, revocable license to use this document and the information it sets for purposes specified by Waukesha. The document must be promptly returned to Waukesha, after its use and/or upon demand by Waukesha. Any possession, disclosure, copying, modification or use of this document, without the permission of Waukesha, can constitute a violation of applicable law and be subject to severe penalties.
©2002 Prolec-GE Waukesha, Inc. All Rights Reserved.

EQUIPMENT TYPE / NO.

WUAKESHA UZD

DWG. NO.	SH	REV.
1030-054P	1	D3

REVISIONS

LTR	REVISION	DATE	APPROVAL	
D2	1. REDRAWN IN PRO/E DATA BASE PER ECR #150526A	05/22/15	TL	JP
D3	1. ADD NOTE TO THE LEFT VIEW PER ECR # 160321E	03/22/16	SK	JP

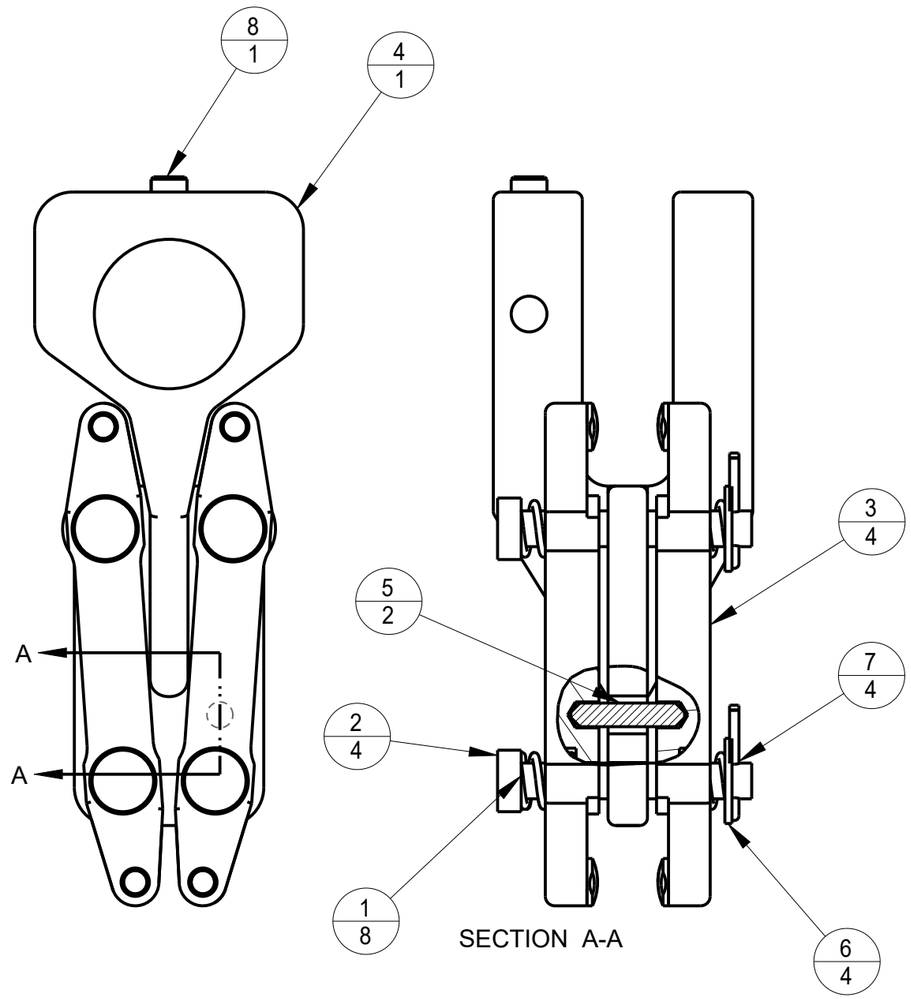

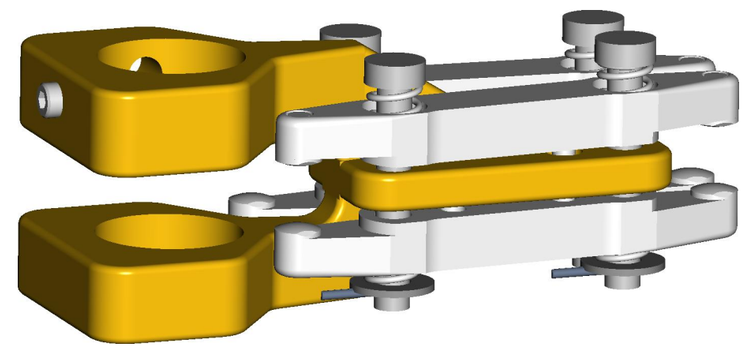

QTY	DRAWING NO.	TITLE	ITEM NO.
1	8010-103-304	SETSCREW, SCH M6 X 1 X 6mm LG METRIC ST	8
4	8010-073-08	PIN. COTTER .06 DIA X .63 LG	7
4	8010-068-25	WASHER,FLAT, ST.(M6) .250ID x.562 OD x.047	6
2	1030-058P	PIN, PIVOT, CONTACT	5
1	1030-057	MOUNT, CONTACT	4
4	1030-056P	CONTACT ASSEMBLY	3
4	1030-055T	PIN, CONTACT	2
8	1000-071	SPRING, MAIN CONTACT	1

PARTS LIST

NEXT ASSY
1030-001K

SOURCE: (M/P) M

HVS MATERIAL CODE:

QTY. OF MATERIAL:

© Prolec-GE Waukesha, Inc. All rights reserved.

UNLESS OTHERWISE SPECIFIED
DIMENSIONS ARE IN INCHES
TOLERANCE ARE
FRACTIONS DECIMALS ANGLES
.XX ± .01 X° ± 1°
.XXX ± .005
DO NOT SCALE DRAWING

DRC / ECR NUMBER:

MATERIAL ANALYSIS NUMBER:

DATE ANALYSIS PERFORMED:

APPROVALS		DATE
DRAWN	T. LY	5/22/15
CHECKED		
QC		

waukesha
9011 GOVERNORS ROW DALLAS, TEXAS 75247

TITLE
CONTACT ASSEMBLY
MOVING, REVERSE SWITCH

SIZE	SCALE	DWG. NO.	REV.
B	1.000	1030-054P	D3

MATERIAL: SEE PARTS LIST

SHEET 1 of 1

COMPANY AND PROPRIETARY: This document contains proprietary information of Prolec-GE Waukesha, Inc. ("Waukesha") and may not be disclosed, copied, modified or used without the written permission of Waukesha. If Waukesha has authorized your possession and/or use of this document, Waukesha has granted you a limited, revocable license to use this document and the information in it only for purposes specified by Waukesha. The document must be promptly returned to Waukesha, after its use and/or upon demand by Waukesha. Any possession, disclosure, copying, modification or use not authorized by Waukesha, can constitute a violation of applicable law and be subject to severe penalties.
©2022 Prolec-GE Waukesha, Inc. All Rights Reserved.

EQUIPMENT TYPE / NO. WUAKESHA UZD

DWG. NO. 1030-054E | SH 1 | REV. C2

REVISIONS

LTR	REVISION	DATE	APPROVAL	
C1	1. REDRAWN IN PRO/E DATA BASE PER ECR #150612D	05/27/15	TL	JP
C2	1. ADD NOTE TO THE LEFT VIEW PER ECR # 160321E	03/22/16	SK	JP

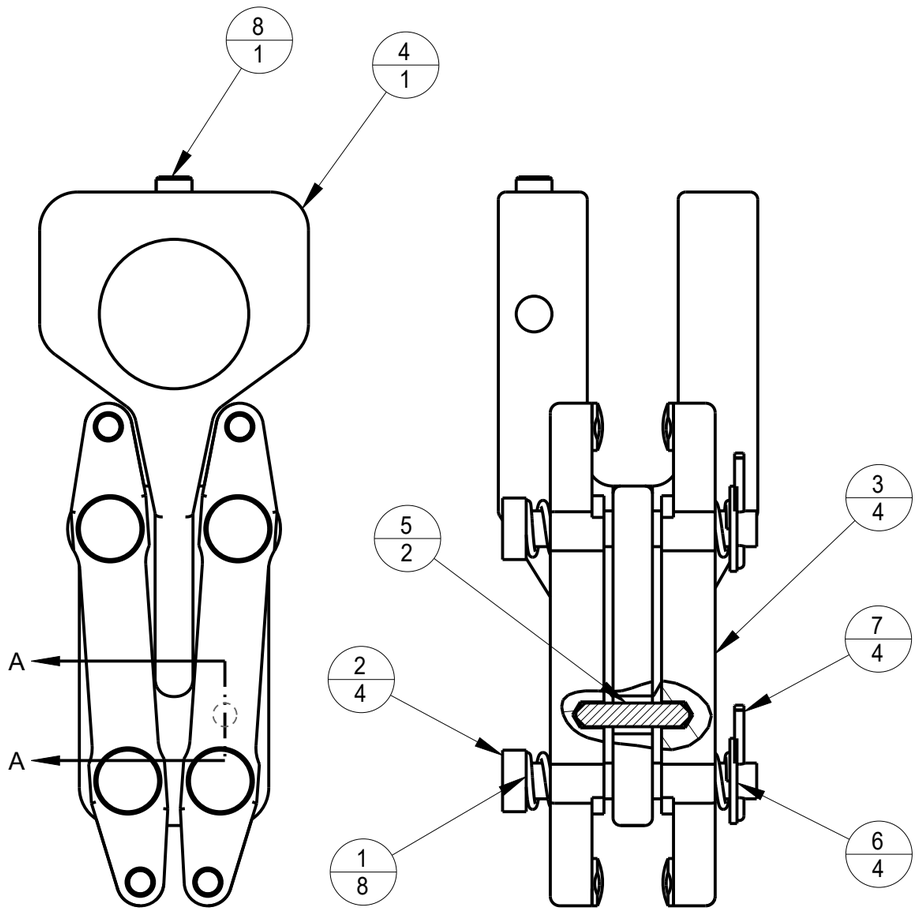

SECTION A-A

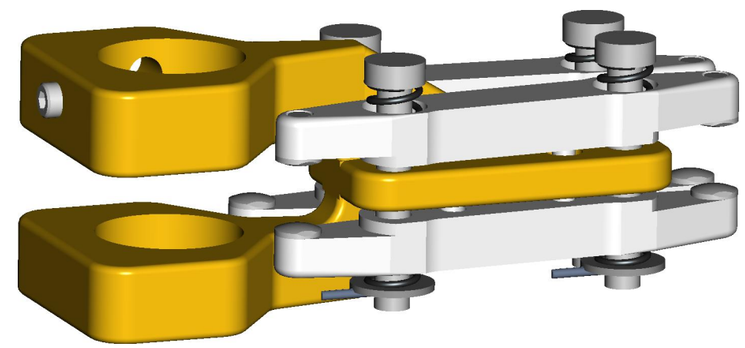

QTY	DRAWING NO.	TITLE	ITEM NO.
1	8010-103-304	SETSCREW, SCH M6 X 1 X 6mm LG METRIC ST	8
4	8010-073-08	PIN. COTTER .06 DIA X .63 LG	7
4	8010-068-25	WASHER,FLAT, ST.(M6) .250ID x.562 OD x.047	6
2	1030-058P	PIN, PIVOT, CONTACT	5
1	1030-057	MOUNT, CONTACT	4
4	1030-056E	CONTACT, ASSEMBLY (ELR)	3
4	1030-055T	PIN, CONTACT	2
8	1000-137	SPRING, MAIN CONTACT	1

PARTS LIST

NEXT ASSY
1030-001KE
1030-001KPGE
1030-001KECOMED

SOURCE: (M/P) M | HVS MATERIAL CODE: | QTY. OF MATERIAL:

© Prolec-GE Waukesha, Inc. All rights reserved.

UNLESS OTHERWISE SPECIFIED DIMENSIONS ARE IN INCHES
TOLERANCE ARE
FRACTIONS DECIMALS ANGLES
.XX ± .01 X° ± 1°
.XXX ± .005
DO NOT SCALE DRAWING

DRC / ECR NUMBER:

MATERIAL ANALYSIS NUMBER:

DATE ANALYSIS PERFORMED:

APPROVALS	DATE
DRAWN T. LY	5/22/15
CHECKED	
QC	

waukesha
9011 GOVERNORS ROW DALLAS, TEXAS 75247

TITLE
CONTACT ASSEMBLY (ELR) MOVING, REVERSE SWITCH

SIZE	SCALE	DWG. NO.	REV.
B	1.000	1030-054E	C2

MATERIAL: SEE PARTS LIST

SHEET 1 of 1

COMPANY AND PROPRIETARY: This document contains proprietary information of Prolec-GE Waukesha, Inc. ("Waukesha") and may not be disclosed, copied, modified or used without the written permission of Waukesha. If Waukesha has authorized your possession and/or use of this document, Waukesha has granted you a limited, revocable license to use this document and the information in it only for purposes specified by Waukesha. The document must be promptly returned to Waukesha, after its use and/or upon demand by Waukesha. Any possession, disclosure, copying, modification or use not authorized by Waukesha, can constitute a violation of applicable law and be subject to severe penalties.
©2022 Prolec-GE Waukesha, Inc. All Rights Reserved.

EQUIPMENT TYPE / NO.	DWG. NO.	SH	REV.
UZD	1030-1750K	1	A

NOTES:
1. FOR MORE DETAIL PLEASE SEE INDIVIDUAL GASKET DRAWINGS.

THESE GASKETS USE IN UNIT WITH INTEGRATED OIL FILTER SYSTEM.

REVISIONS

LTR	REVISION	DATE	APPROVAL	
A	1. NEW DRAWING PER DRC 092118A	09/21/18	SK	JP

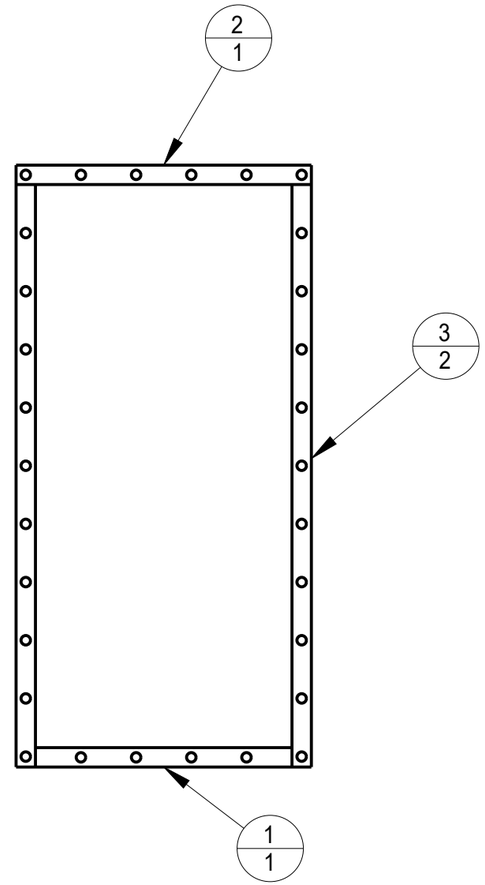

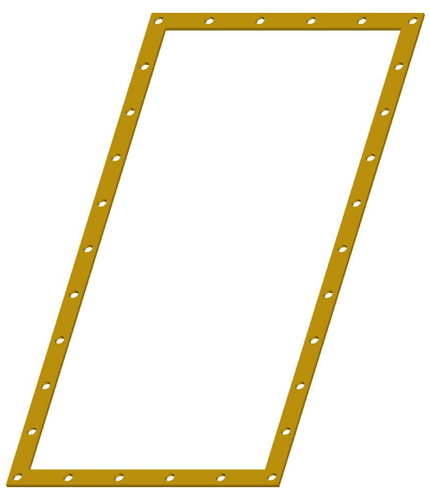

QTY	DRAWING NO.	TITLE	ITEM NO.
2	1030-1807	GASKET, DOOR W/10 HOLES LTC-UZD ASSY GROUP	3
1	1030-1618	GASKET, DOOR W/6 HOLES LTC-UZD ASSY GROUP	2
1	1030-1615	GASKET, DOOR W/4 HOLES LTC-UZD ASSY GROUP	1

PARTS LIST

NEXT ASSY
1030-1732K
-
-
-
-
-

SOURCE: (M/P) P
HVS MATERIAL CODE: -
QTY. OF MATERIAL: -

© Prolec-GE Waukesha, Inc. All rights reserved.

UNLESS OTHERWISE SPECIFIED
DIMENSIONS ARE IN INCHES
TOLERANCE ARE
FRACTIONS DECIMALS ANGLES
.XX ± .01 X° ± 1°
.XXX ± .005
DO NOT SCALE DRAWING

DRC / ECR NUMBER: -

MATERIAL ANALYSIS NUMBER: -

DATE ANALYSIS PERFORMED: -

APPROVALS	DATE
DRAWN SK	09/21/18
CHECKED -	-
QC -	-

waukesha
9011 GOVERNORS ROW DALLAS, TEXAS 75247

TITLE
GASKET DOOR KIT UZD LTC

SIZE	SCALE	DWG. NO.	REV.
B	0.125	1030-1750K	A

MATERIAL: SEE PARTS LIST
SHEET: 1 of 1

COMPANY AND PROPRIETARY: This document contains proprietary information of Prolec-GE Waukesha, Inc. ("Waukesha") and may not be disclosed, copied, modified or used without the written permission of Waukesha. If Waukesha has authorized your possession and/or use of this document, Waukesha has granted you a limited, revocable license to use this document and the information in it only for purposes specified by Waukesha. The document must be promptly returned to Waukesha, after its use and/or upon demand by Waukesha. Any possession, disclosure, copying, modification or use not authorized by Waukesha, can constitute a violation of applicable law and be subject to severe penalties.
©2022 Prolec-GE Waukesha, Inc. All Rights Reserved.

EQUIPMENT TYPE / NO.	DWG. NO.	SH	REV.
UZD	1030-1751K	1	A

NOTES:
1. FOR MORE DETAIL PLEASE SEE INDIVIDUAL GASKET DRAWINGS.

THESE GASKETS USE IN UNIT WITH INTEGRATED OIL FILTER SYSTEM.

REVISIONS

LTR	REVISION	DATE	APPROVAL	
A	1. NEW DRAWING PER DRC 092118A	09/21/18	SK	JP

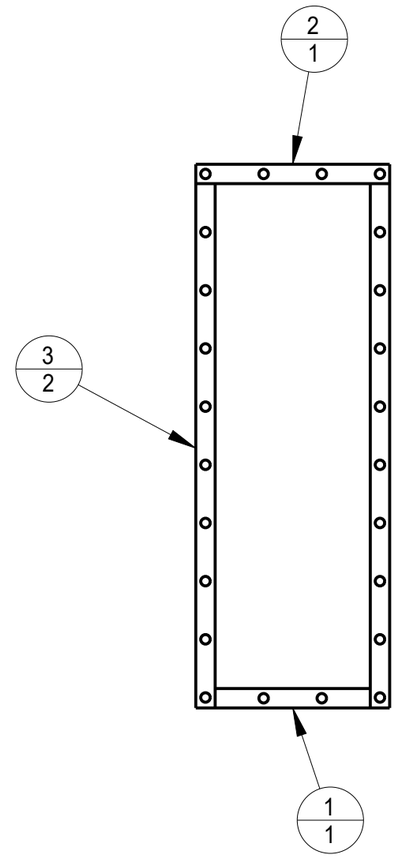

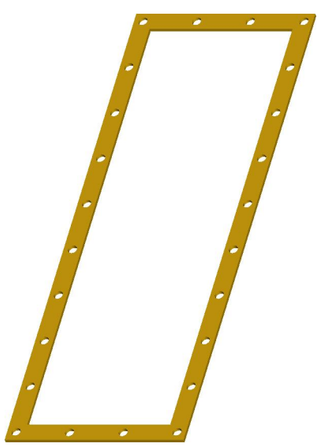

PARTS LIST

QTY	DRAWING NO.	TITLE	ITEM NO.
2	1030-1808	GASKET, DOOR W/9 HOLES LTC-UZD ASSY GROUP	3
1	1030-1617	GASKET, DOOR W/4 HOLES LTC-UZD ASSY GROUP	2
1	1030-1614	GASKET, DOOR W/2 HOLES LTC-UZD ASSY GROUP	1

NEXT ASSY
1030-1732K
-
-
-
-
-

SOURCE: (M/P)	HVS MATERIAL CODE:	QTY. OF MATERIAL:
P	-	-

© Prolec-GE Waukesha, Inc. All rights reserved.

UNLESS OTHERWISE SPECIFIED
DIMENSIONS ARE IN INCHES
TOLERANCE ARE
FRACTIONS DECIMALS ANGLES
.XX ± .01 X° ± 1°
.XXX ± .005
DO NOT SCALE DRAWING

DRC / ECR NUMBER: -

APPROVALS	DATE
DRAWN SK	09/21/18
CHECKED -	-
QC -	-

MATERIAL ANALYSIS NUMBER: -

DATE ANALYSIS PERFORMED: -

waukesha
9011 GOVERNORS ROW DALLAS, TEXAS 75247

TITLE
GASKET DOOR KIT UZD LTC

SIZE	SCALE	DWG. NO.	REV.
B	0.125	1030-1751K	A

MATERIAL: SEE PARTS LIST

SHEET 1 of 1

COMPANY AND PROPRIETARY: This document contains proprietary information of Prolec-GE Waukesha, Inc. ("Waukesha") and may not be disclosed, copied, modified or used without the written permission of Waukesha. If Waukesha has authorized your possession and/or use of this document, Waukesha has granted you a limited, revocable license to use this document and the information in it only for purposes specified by Waukesha. The document must be promptly returned to Waukesha, after its use and/or upon demand by Waukesha. Any possession, disclosure, copying, modification or use not authorized by Waukesha, can constitute a violation of applicable law and be subject to severe penalties.
©2022 Prolec-GE Waukesha, Inc. All Rights Reserved.

EQUIPMENT TYPE / NO.
UZD

DWG. NO. 1030-1754K | SH 1 | REV. A

NOTES:
1. FOR MORE DETAIL PLEASE SEE INDIVIDUAL GASKET DRAWINGS.

THESE GASKETS USE IN UNIT WITH OUT INTEGRATED OIL FILTER SYSTEM.

REVISIONS				
LTR	REVISION	DATE	APPROVAL	
A	1. NEW DRAWING PER DRC 092118A	09/21/18	SK	JP

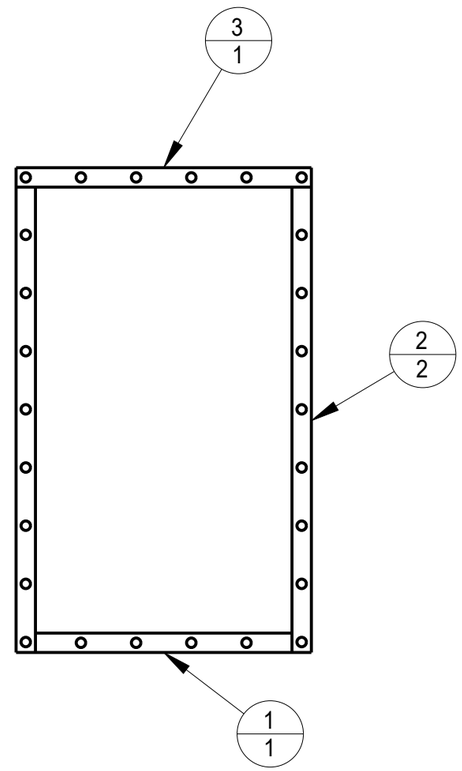

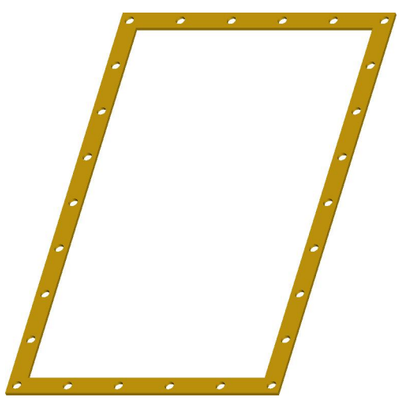

QTY	DRAWING NO.	TITLE	ITEM NO.
1	1030-1618	GASKET, DOOR W/6 HOLES LTC-UZD ASSY GROUP	3
2	1030-1616	GASKET, DOOR W/8 HOLES LTC-UZD ASSY GROUP	2
1	1030-1615	GASKET, DOOR W/4 HOLES LTC-UZD ASSY GROUP	1

PARTS LIST

NEXT ASSY
1030-1732K
-
-
-
-
-

SOURCE: (M/P) P | HVS MATERIAL CODE: - | QTY. OF MATERIAL: -

© Prolec-GE Waukesha, Inc. All rights reserved.

UNLESS OTHERWISE SPECIFIED
DIMENSIONS ARE IN INCHES
TOLERANCE ARE
FRACTIONS DECIMALS ANGLES
.XX ± .01 X° ± 1°
.XXX ± .005
DO NOT SCALE DRAWING

DRC / ECR NUMBER: -

waukesha
9011 GOVERNORS ROW DALLAS, TEXAS 75247

APPROVALS		DATE
DRAWN	SK	09/21/18
CHECKED	-	-
QC	-	-

MATERIAL ANALYSIS NUMBER: -

DATE ANALYSIS PERFORMED: -

TITLE
GASKET DOOR KIT UZD LTC

SIZE	SCALE	DWG. NO.	REV.
B	0.125	1030-1754K	A

MATERIAL: SEE PARTS LIST

SHEET 1 of 1

COMPANY AND PROPRIETARY: This document contains proprietary information of Prolec-GE Waukesha, Inc. ("Waukesha") and may not be disclosed, copied, modified or used without the written permission of Waukesha. If Waukesha has authorized your possession and/or use of this document, Waukesha has granted you a limited, revocable license to use this document and the information in it only for purposes specified by Waukesha. The document must be promptly returned to Waukesha, after its use and/or upon demand by Waukesha. Any possession, disclosure, copying, modification or use not authorized by Waukesha, can constitute a violation of applicable law and be subject to severe penalties.
©2022 Prolec-GE Waukesha, Inc. All Rights Reserved.

EQUIPMENT TYPE / NO.	DWG. NO.	SH	REV.
UZD	1030-1753K	1	A

NOTES:
1. FOR MORE DETAIL PLEASE SEE INDIVIDUAL GASKET DRAWINGS.

THESE GASKETS USE IN UNIT WITH OUT INTEGRATED OIL FILTER SYSTEM.

REVISIONS

LTR	REVISION	DATE	APPROVAL	
A	1. NEW DRAWING PER DRC 092118A	09/21/18	SK	JP

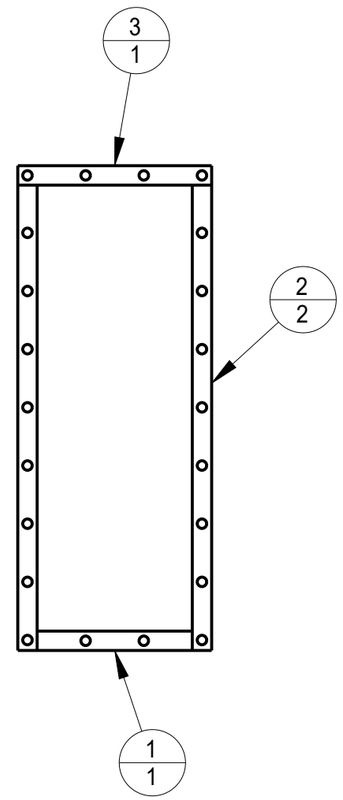

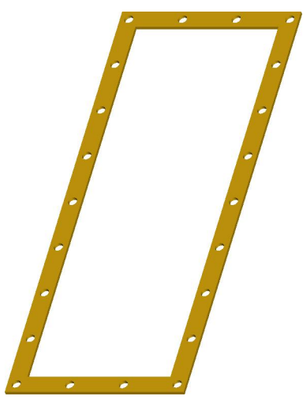

NEXT ASSY
1030-1732K
-
-
-
-
-

QTY	DRAWING NO.	TITLE	ITEM NO.
1	1030-1617	GASKET, DOOR W/4 HOLES LTC-UZD ASSY GROUP	3
2	1030-1616	GASKET, DOOR W/8 HOLES LTC-UZD ASSY GROUP	2
1	1030-1614	GASKET, DOOR W/2 HOLES LTC-UZD ASSY GROUP	1

PARTS LIST

SOURCE: (M/P)	HVS MATERIAL CODE:	QTY. OF MATERIAL:
P	-	-

© Prolec-GE Waukesha, Inc. All rights reserved.

UNLESS OTHERWISE SPECIFIED
DIMENSIONS ARE IN INCHES
TOLERANCE ARE
FRACTIONS DECIMALS ANGLES
.XX ± .01 X° ± 1°
.XXX ± .005
DO NOT SCALE DRAWING

DRC / ECR NUMBER: -

waukesha
9011 GOVERNORS ROW DALLAS, TEXAS 75247

APPROVALS		DATE
DRAWN	SK	09/21/18
CHECKED	-	-
QC	-	-

MATERIAL ANALYSIS NUMBER: -

DATE ANALYSIS PERFORMED: -

TITLE: GASKET DOOR KIT UZD LTC

SIZE	SCALE	DWG. NO.	REV.
B	0.125	1030-1753K	A

MATERIAL: SEE PARTS LIST

SHEET 1 of 1

COMPANY AND PROPRIETARY: This document contains proprietary information of Prolec-GE Waukesha, Inc. ("Waukesha") and may not be disclosed, copied, modified or used without the written permission of Waukesha. If Waukesha has authorized your possession and/or use of this document, Waukesha has granted you a limited, revocable license to use this document and the information in it only for purposes specified by Waukesha. The document must be promptly returned to Waukesha, after its use and/or upon demand by Waukesha. Any possession, disclosure, copying, modification or use not authorized by Waukesha, can constitute a violation of applicable law and be subject to severe penalties.
©2022 Prolec-GE Waukesha, Inc. All Rights Reserved.

EQUIPMENT TYPE / NO.	DWG. NO.	SH	REV.
WAUKESHA UZD	1030-2019	1	A

REVISIONS

LTR	REVISION	DATE	APPROVAL	
A	1. NEW DRAWING CREATED PER DRC#062519A	6/25/19	TL	JP

NOTES:
1 PURCHASE INFORMATION:
VENDOR NAME: WAUKESHA
SAP: 2047140
P/N: 0765157R0001
DISCRIPTION: BRAKE ASSEMBLY MOTOR DRIVE.

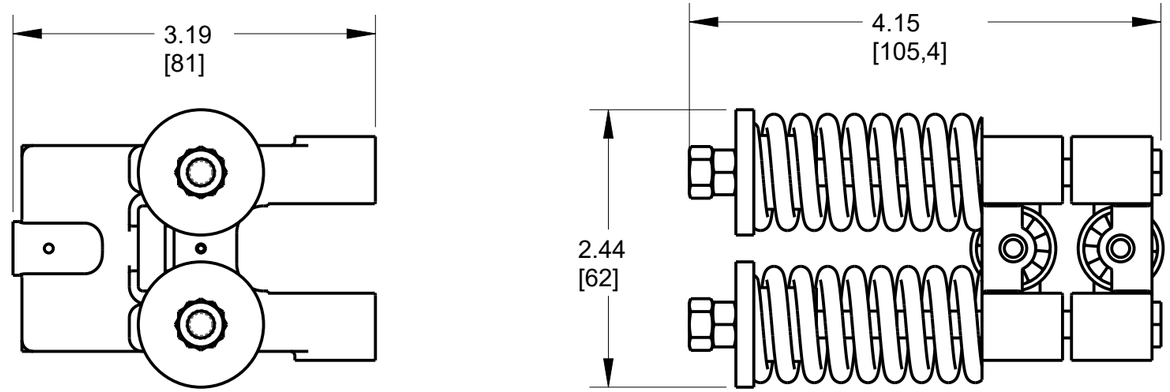

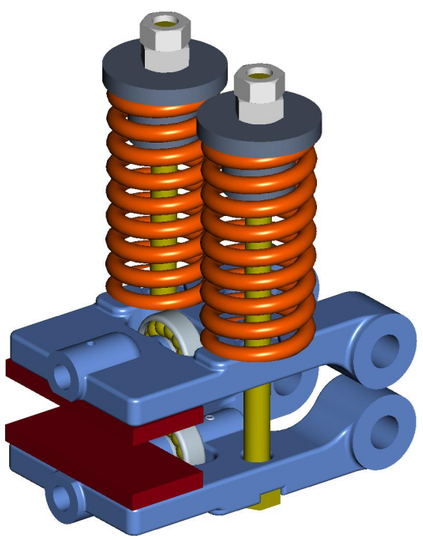

DIMENSIONS ARE FOR REFERENCE ONLY

NEXT ASSY
1030-1749K

SOURCE: (M/P) P
HVS MATERIAL CODE:
QTY. OF MATERIAL:

UNLESS OTHERWISE SPECIFIED
DIMENSIONS ARE IN INCHES
TOLERANCE ARE
FRACTIONS DECIMALS ANGLES
.XX ± .01 X° ± 1°
.XXX ± .005
DO NOT SCALE DRAWING

DRC / ECR NUMBER:

MATERIAL ANALYSIS NUMBER:

DATE ANALYSIS PERFORMED:

APPROVALS		DATE
DRAWN	T. LY	6/25/19
CHECKED	TL	6/25/19
QC		

COMPANY AND PROPRIETARY: This document contains proprietary information of Prolec-GE Waukesha, Inc. ("Waukesha") and may not be disclosed, copied, modified or used without the written permission of Waukesha. If Waukesha has authorized your possession and/or use of this document, Waukesha has granted you a limited, revocable license to use this document and the information in it only for purposes specified by Waukesha. The document must be promptly returned to Waukesha, after its use and/or upon demand by Waukesha. Any possession, disclosure, copying, modification or use not authorized by Waukesha, can constitute a violation of applicable law and be subject to severe penalties.
©2022 Prolec-GE Waukesha, Inc. All Rights Reserved.

© Prolec-GE Waukesha, Inc. All rights reserved.

waukesha
9011 GOVERNORS ROW DALLAS, TEXAS 75247

TITLE
BRAKE ASSEMBLY
MOTOR DRIVE

SIZE	SCALE	DWG. NO.	REV.
B	0.750	1030-2019	A

MATERIAL: SEE NOTES

SHEET 1 of 1

EQUIPMENT TYPE / NO.: UZD

DWG. NO. 1030-2114K | SH 1 | REV. B

REVISIONS

LTR	REVISION	DATE	APPROVAL	
A	1. INITIAL RELEASE PER DRC #060320C	6/2/20	TL	JP
B	1. CHANGE F:1030-2114 TO 1030-2114K PER ECR #200819A	8/19/20	TL	JP

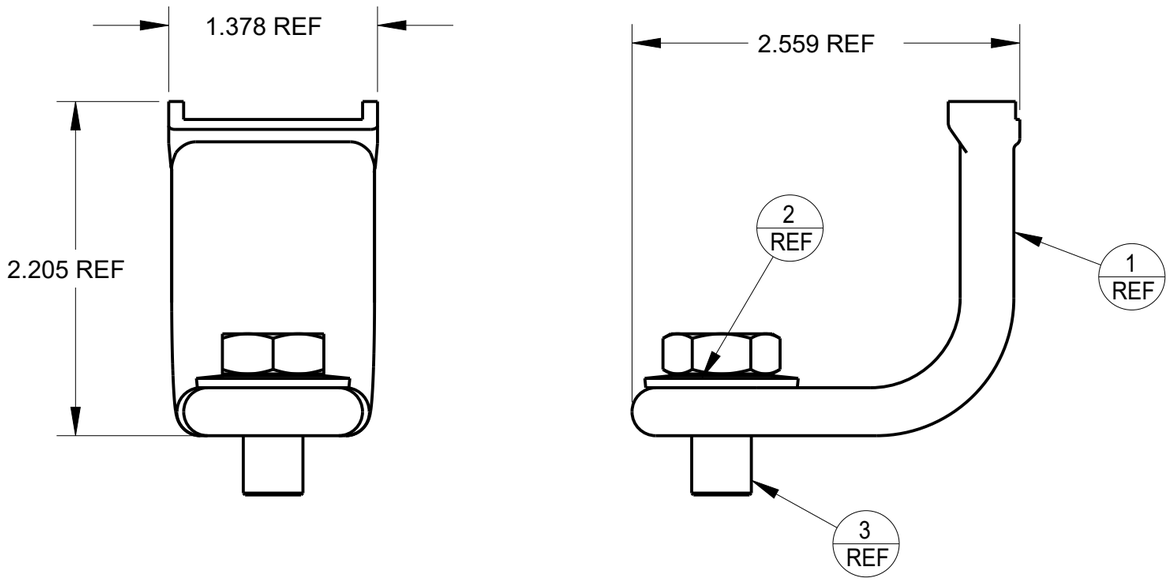

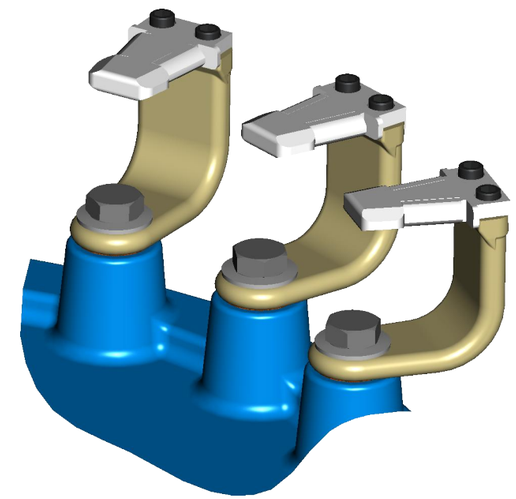

ISO VIEW SHOWN FOR REF. ONLY
SCALE 0.500

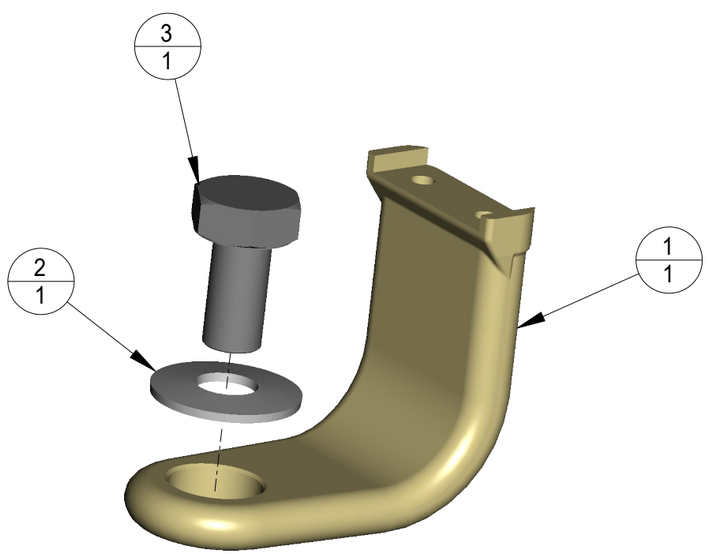

SAP NO.	QTY	DRAWING NO.	TITLE	ITEM NO.
2005987	1	8010-199-811	SCREW, HEX HD M10 X 1.5 X 20 LG	3
2006249	1	1030-476	WASHER, CONE DISC	2
2004196	1	1030-2113	CONTACT HOLDER, STATIONARY	1

PARTS LIST

NEXT ASSY

SOURCE: (M/P) M | HVS MATERIAL CODE: | QTY. OF MATERIAL:

© Prolec-GE Waukesha, Inc. All rights reserved.

UNLESS OTHERWISE SPECIFIED
DIMENSIONS ARE IN INCHES
TOLERANCE ARE
FRACTIONS DECIMALS ANGLES
.XX ± .01 X° ± 1°
.XXX ± .005
DO NOT SCALE DRAWING

DRC / ECR NUMBER:

MATERIAL ANALYSIS NUMBER:

DATE ANALYSIS PERFORMED:

APPROVALS		DATE
DRAWN	T. LY	6/2/20
CHECKED	JP	6/2/20
QC		

waukesha
9011 GOVERNORS ROW DALLAS, TEXAS 75247

TITLE: KIT-CONTACT HOLDER STATIONARY & HARDWARE

SIZE	SCALE	DWG. NO.	REV.
B	1.000	1030-2114K	B

MATERIAL: SEE PARTS LIST

SHEET 1 of 1

COMPANY AND PROPRIETARY: This document contains proprietary information of Prolec-GE Waukesha, Inc. ("Waukesha") and may not be disclosed, copied, modified or used without the written permission of Waukesha. If Waukesha has authorized your possession and/or use of this document, Waukesha has granted you a limited, revocable license to use this document and the information in it only for purposes specified by Waukesha. The document must be promptly returned to Waukesha, after its use and/or upon demand by Waukesha. Any possession, disclosure, copying, modification or use not authorized by Waukesha, can constitute a violation of applicable law and be subject to severe penalties.
©2022 Prolec-GE Waukesha, Inc. All Rights Reserved.

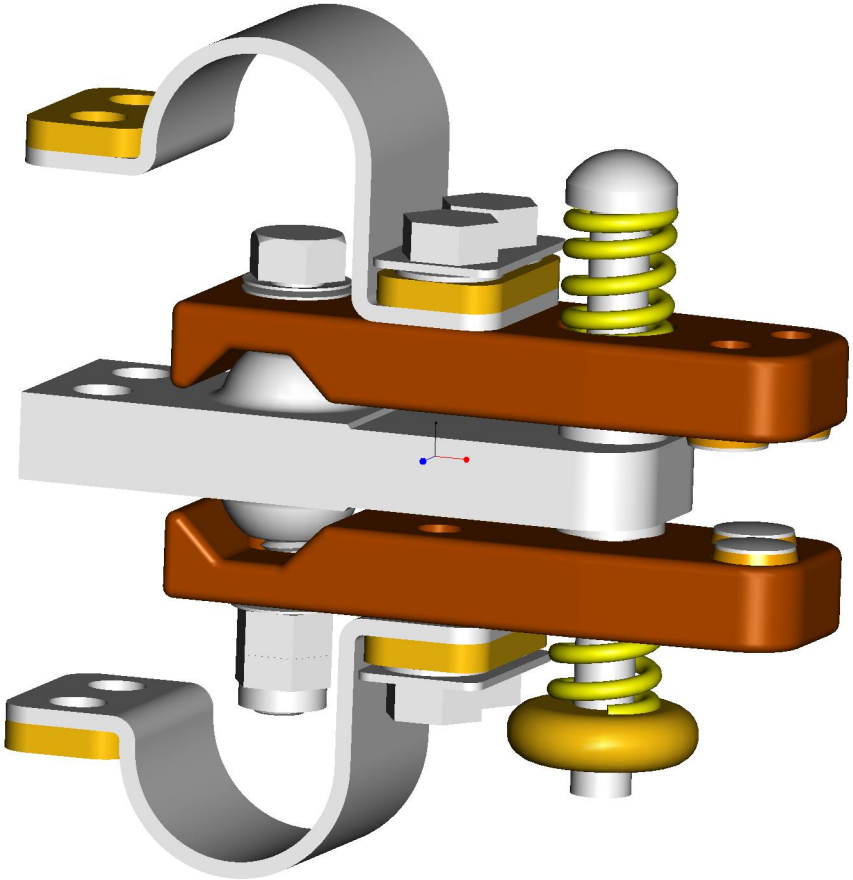

1030-371P MOVING REV. CHANGEOVER SEL.SW. ASSEMBLY

For interactive 3D PDF, click the download button

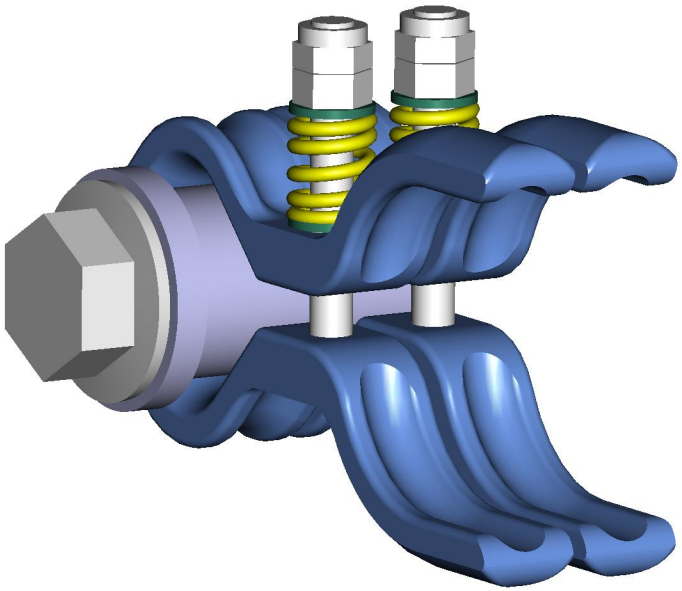

1030-025K KIT-MAIN SLIP CONTACT BOWTIE

For interactive 3D PDF, click the download button

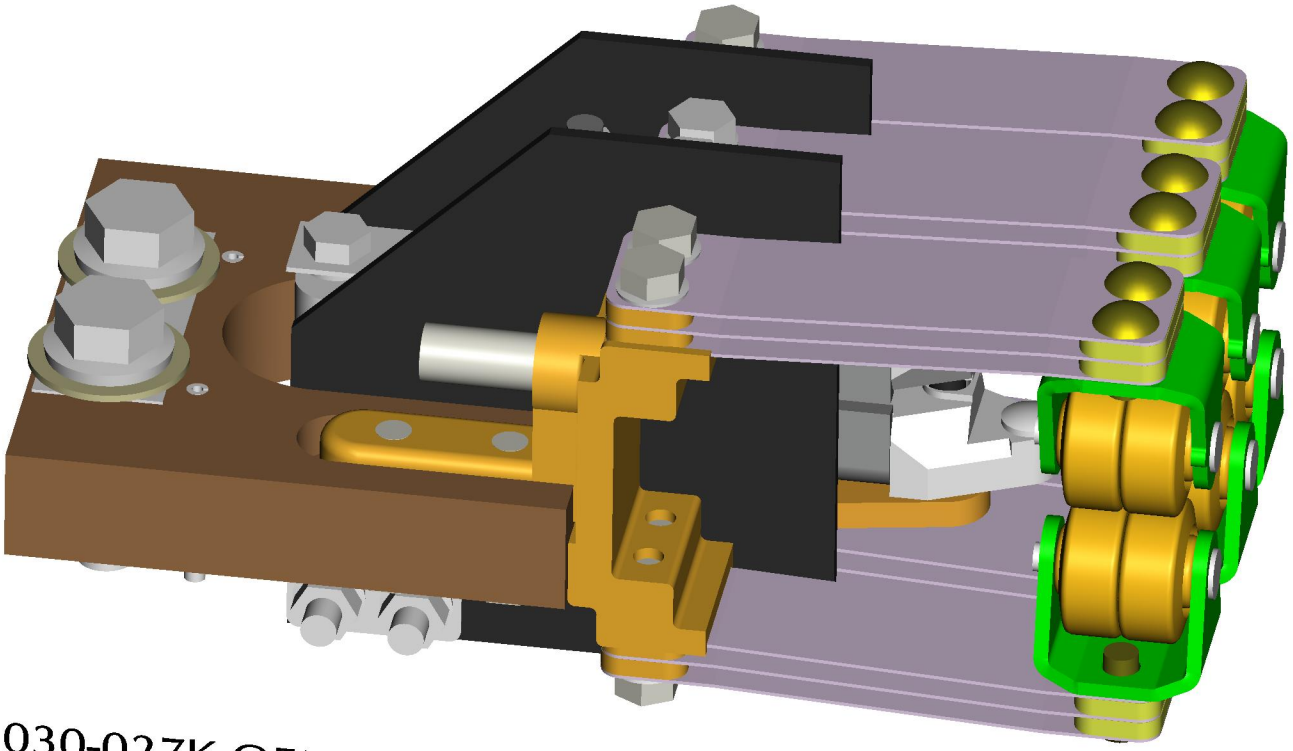

1030-027K-OEM KIT-MAIN CONTACT ARM WITH ROLLERS
For interactive 3D PDF, click the download button

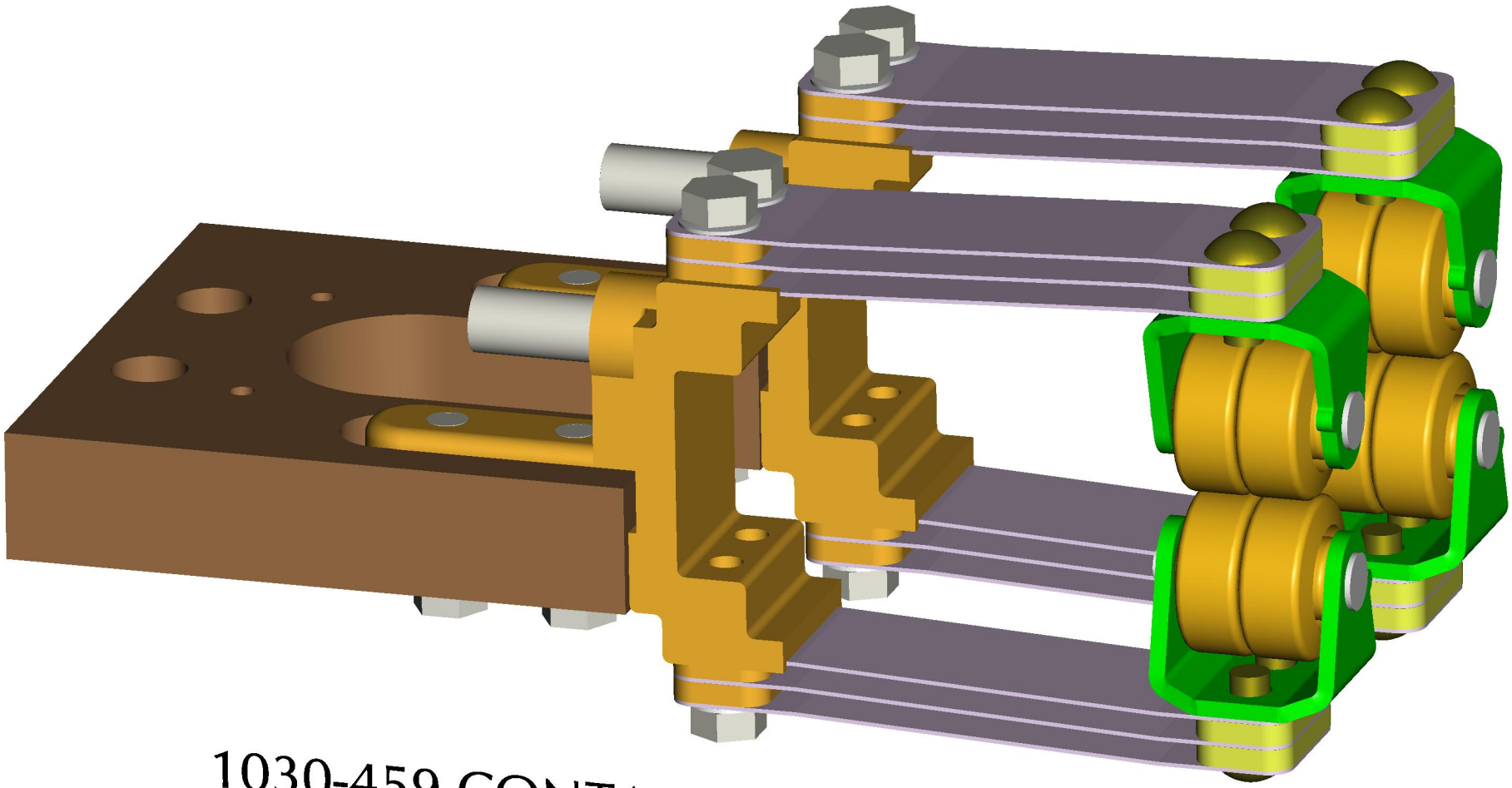

1030-459 CONTACT ACT ASSEMBLY RESISTOR
For interactive 3D PDF, click the download button

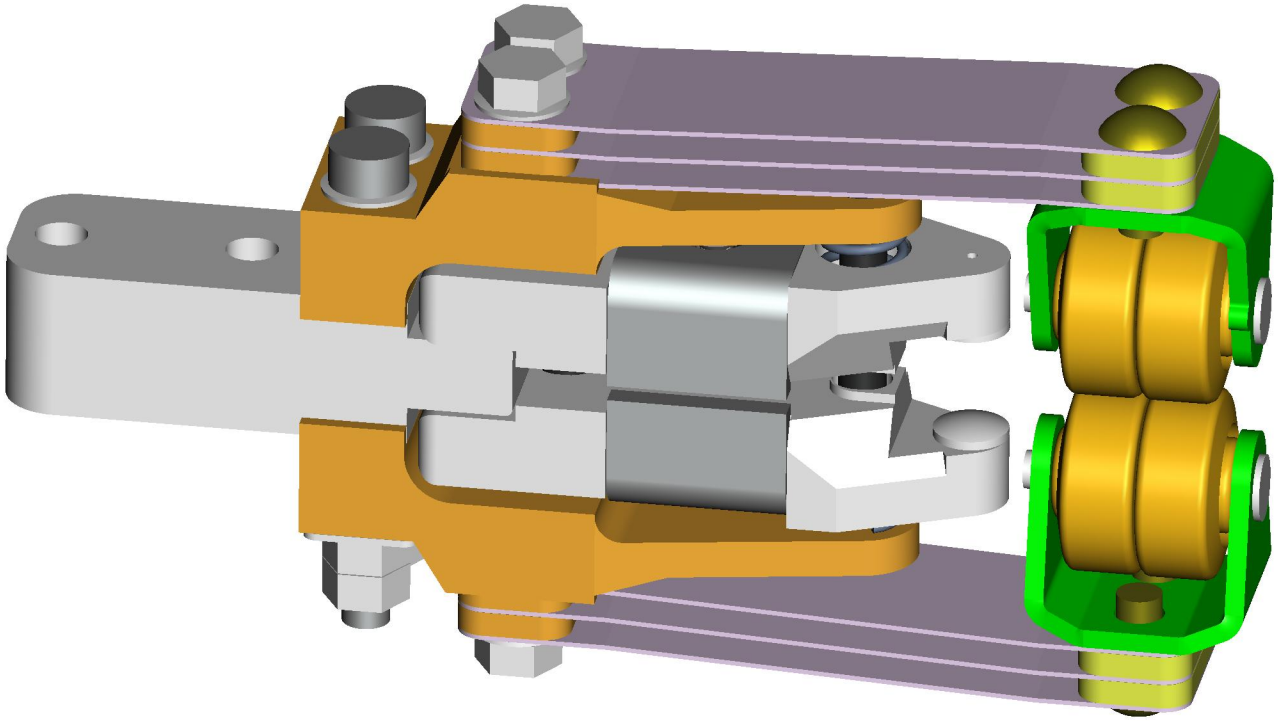

1030-214P CONTACT ARM ASSEMBLY
For interactive 3D PDF, click the download button

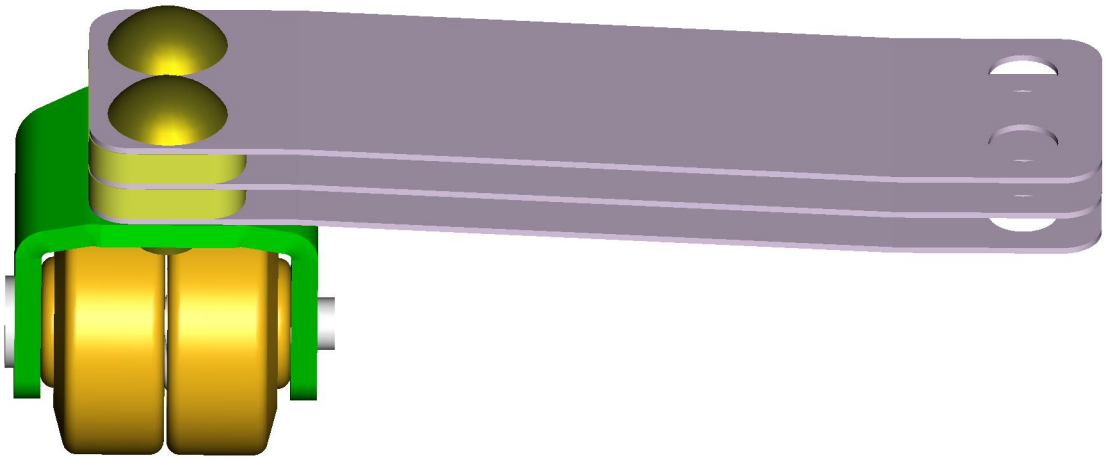

1030-217 ROLLER ASSEMBLY

For interactive 3D PDF, click the download button

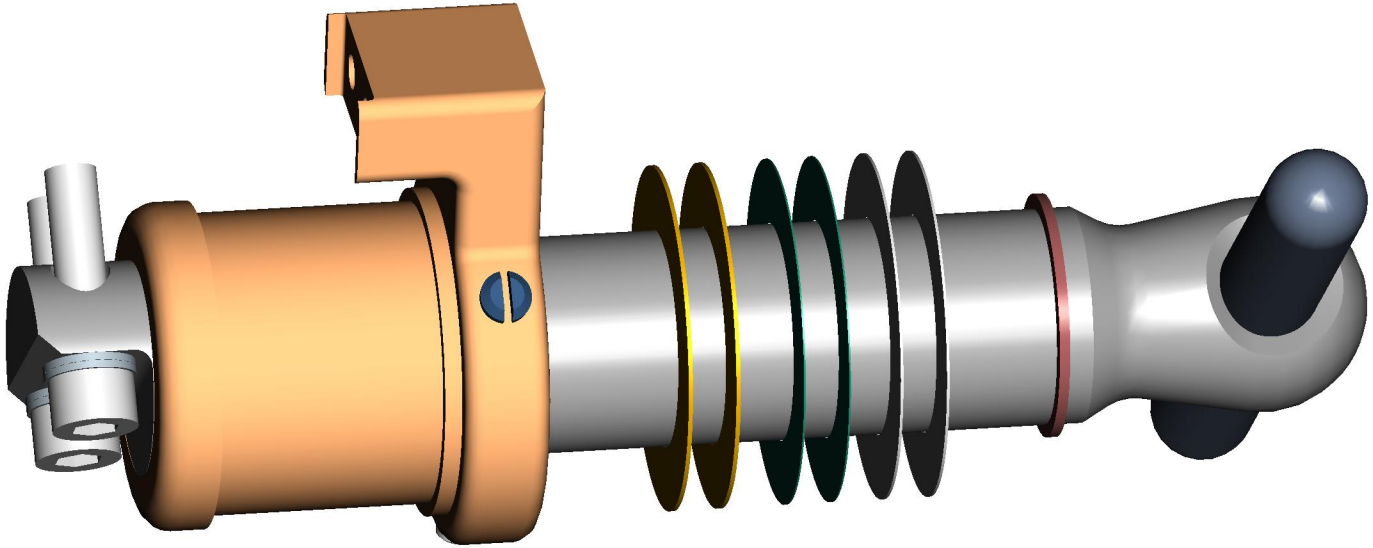

1030-478P CONTACT ARM ASSEMBLY

For interactive 3D PDF, click the download button

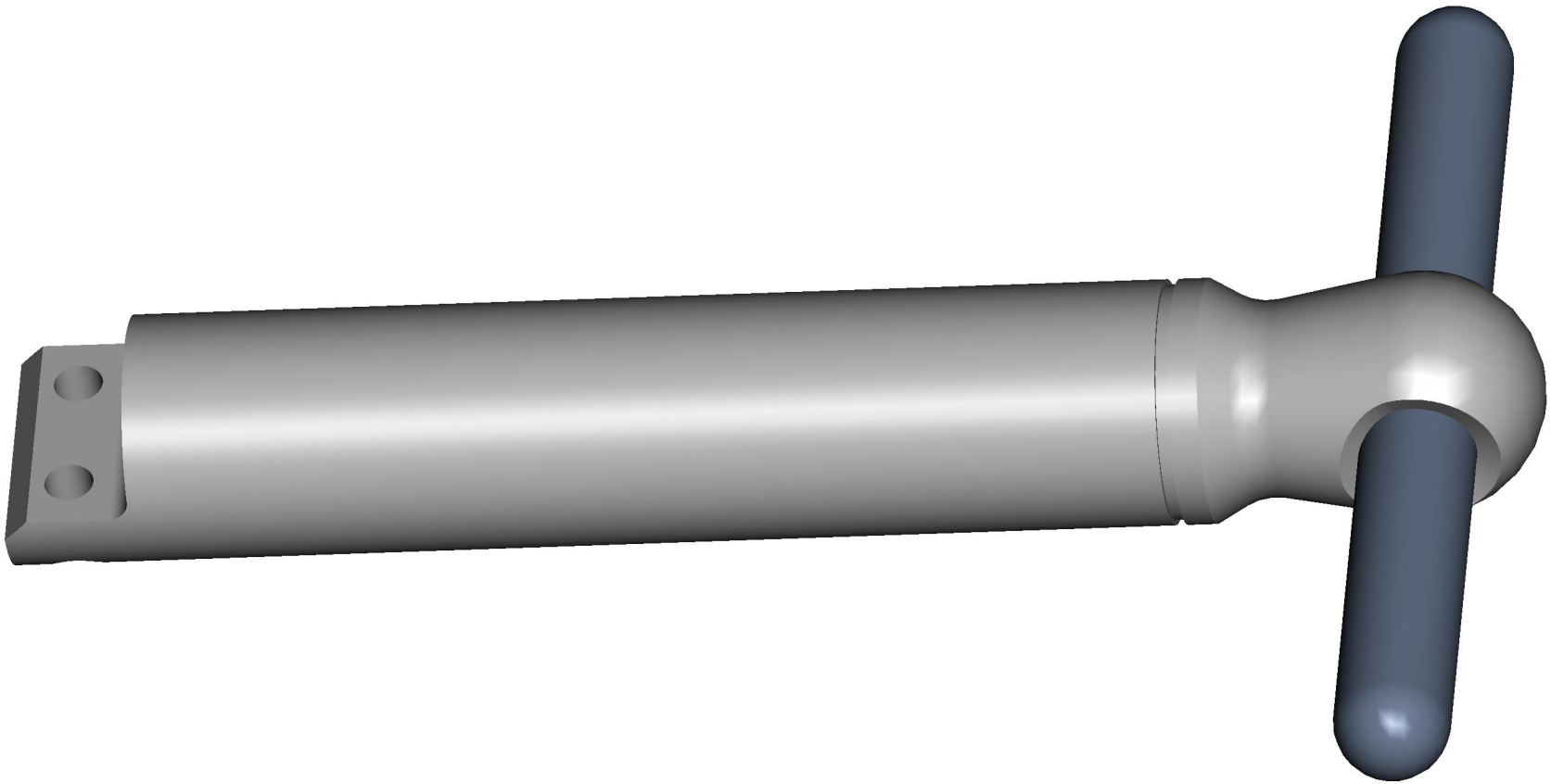

1030-485 SHAFT ASSEMBLY

For interactive 3D PDF, click the download button

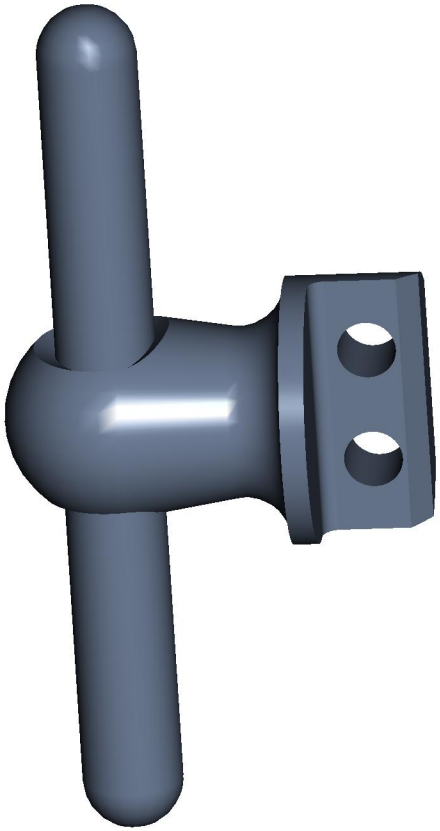

1030-1785 SHAFT, ASSEMBLY SHORT
For interactive 3D PDF, click the download button

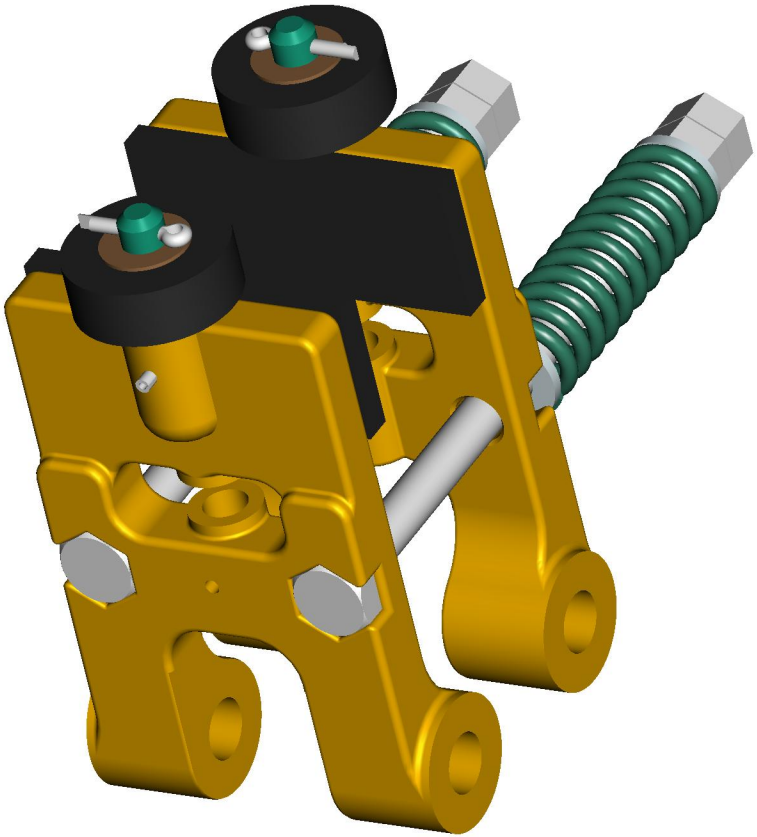

1030-042K KIT-BRAKE ROLLER

For interactive 3D PDF, click the download button

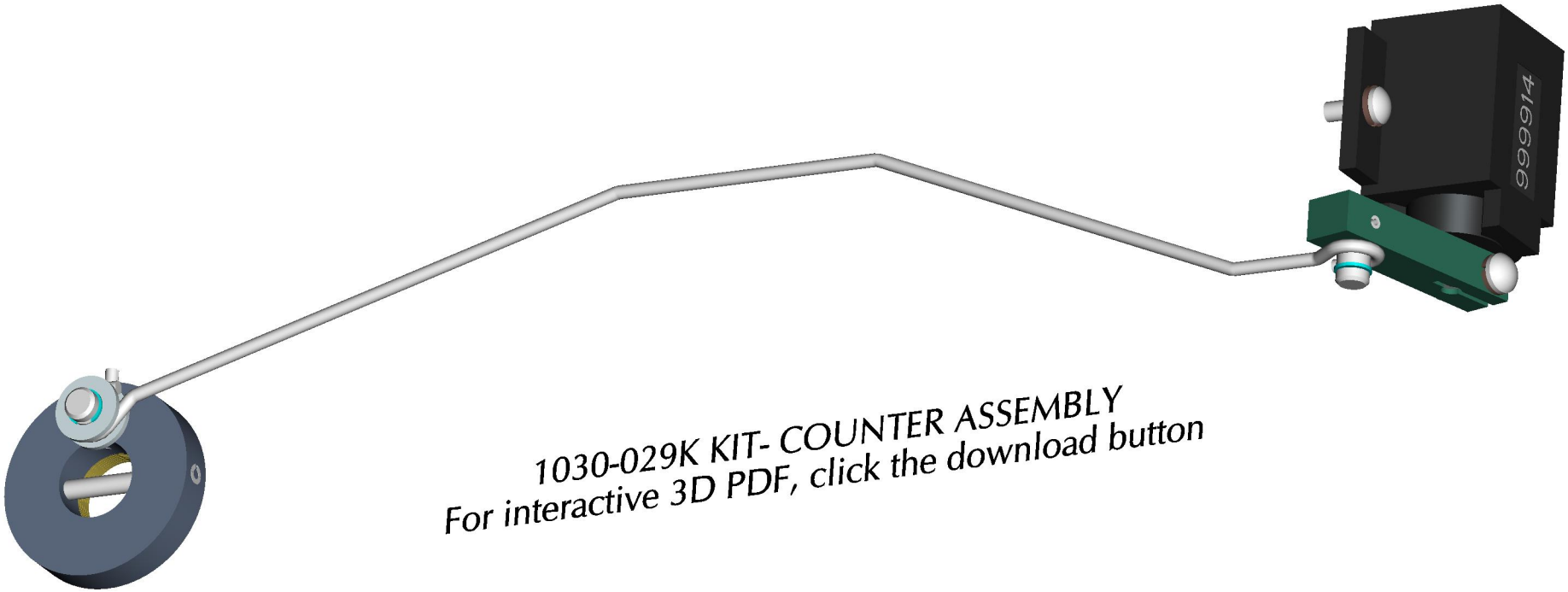

1030-029K KIT- COUNTER ASSEMBLY
For interactive 3D PDF, click the download button

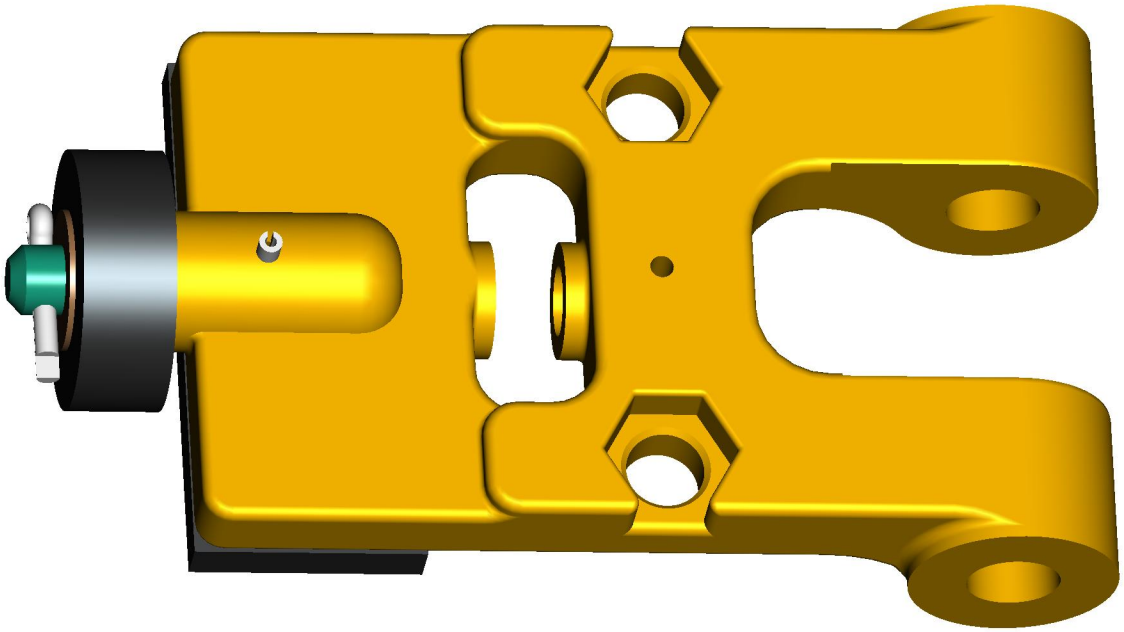

1030-468 BRAKE ASSEMBLY UZD
For interactive 3D PDF, click the download button

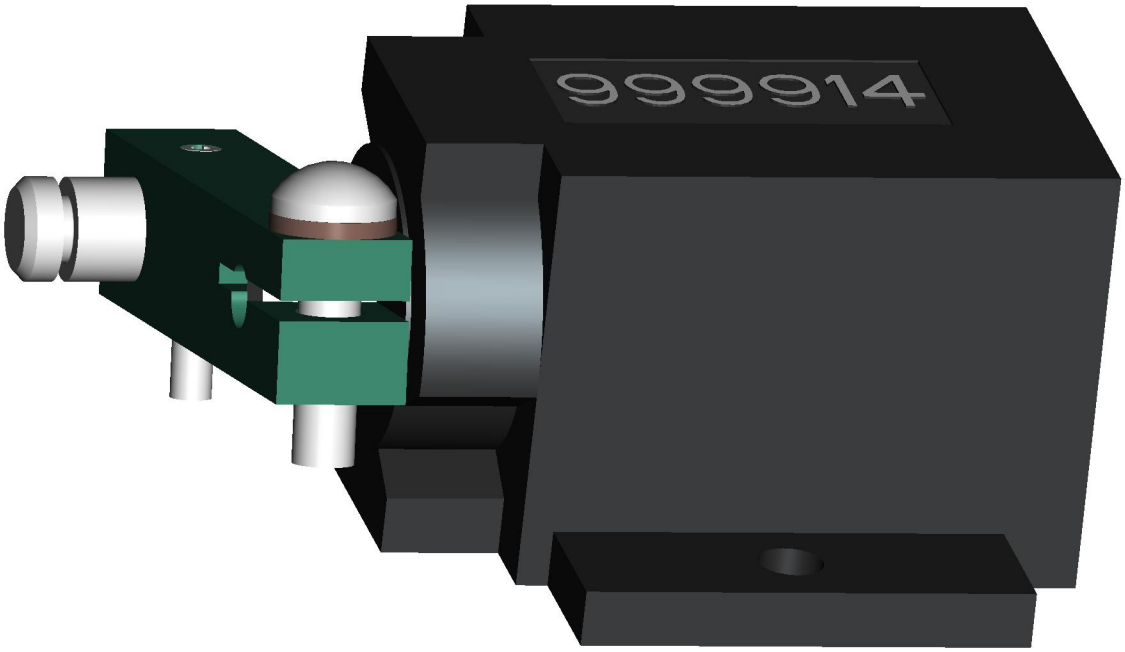

1030-709 COUNTER ASSEMBLY

For interactive 3D PDF, click the download button

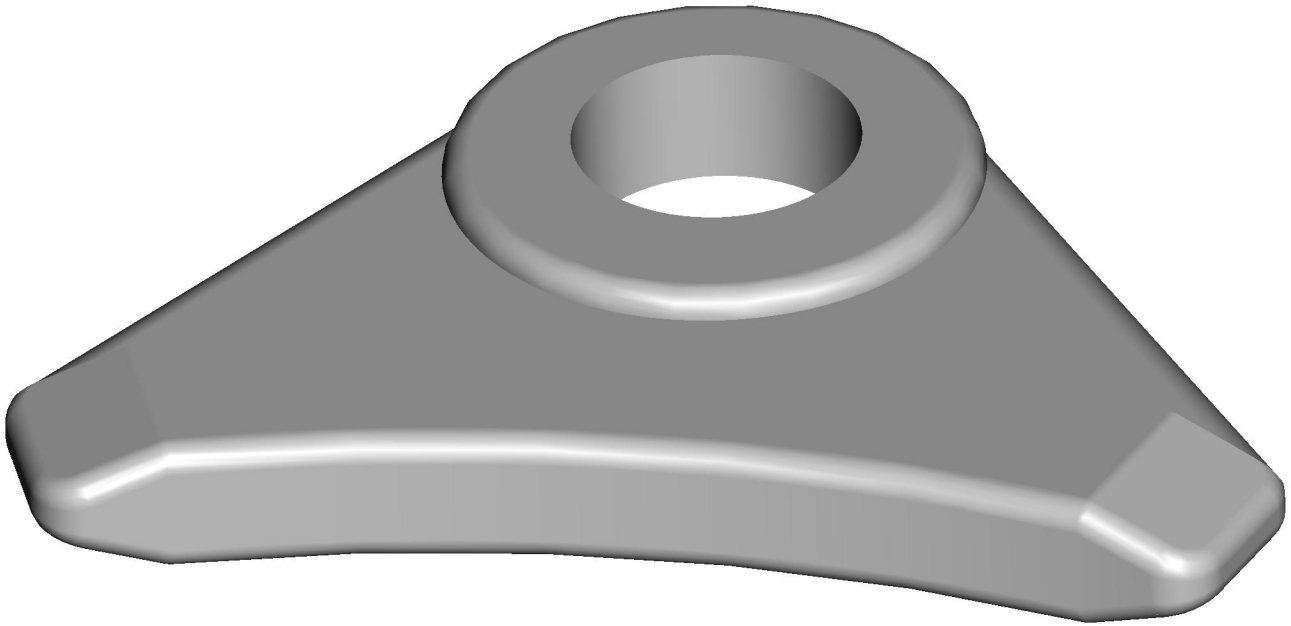

1030-384P CONTACT, STATIONARY REVERSING SWITCH
For interactive 3D PDF, click the download button

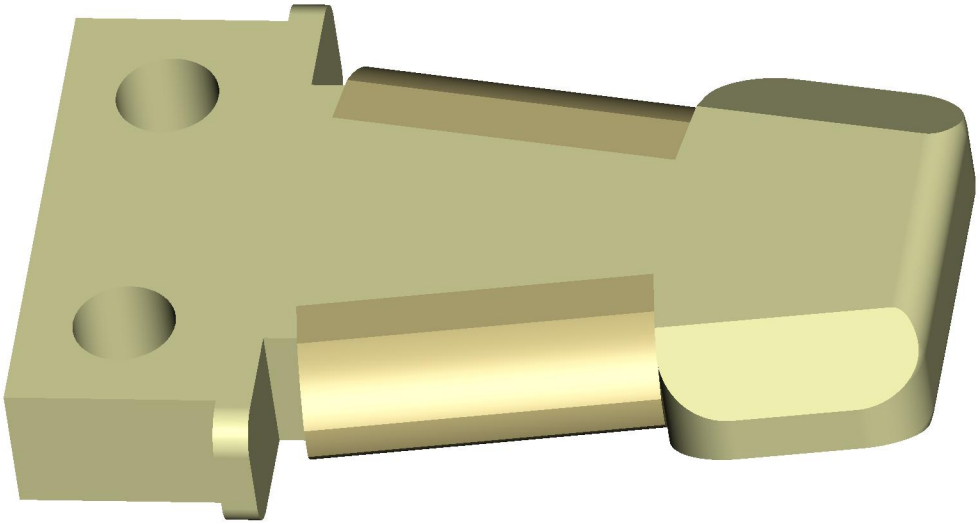

1030-052P CONTACT ASSEMBLY STATIONARY
For interactive 3D PDF, click the download button

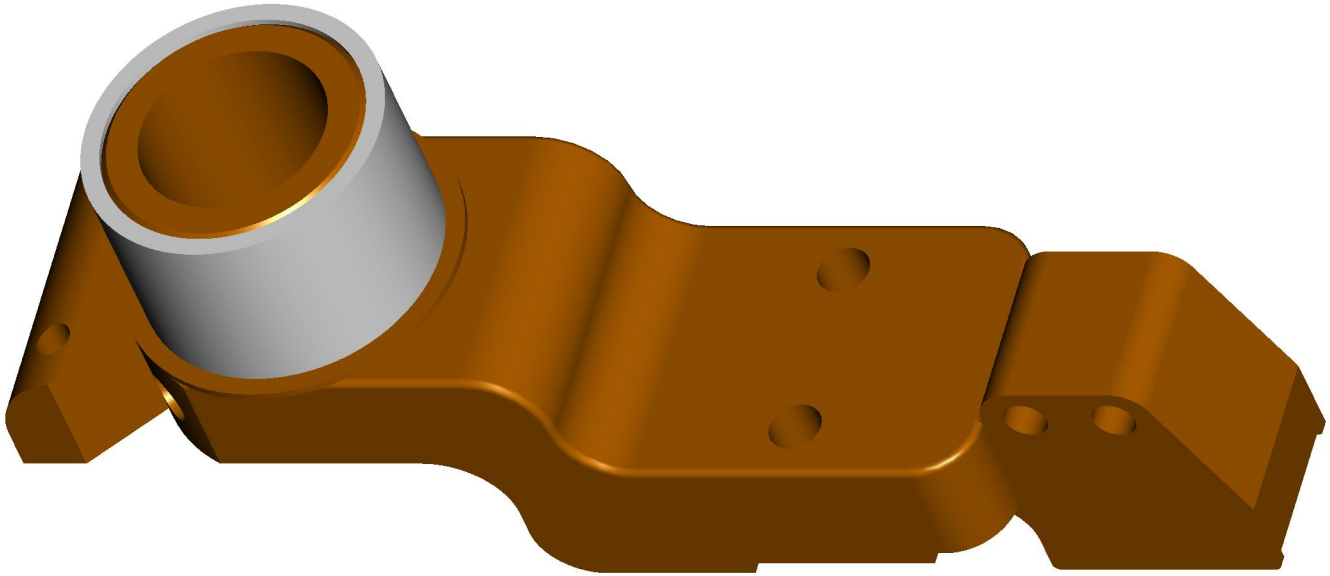

1030-1191 CONTACT ARM, UPPER ASSEMBLY
For interactive 3D PDF, click the downloan button

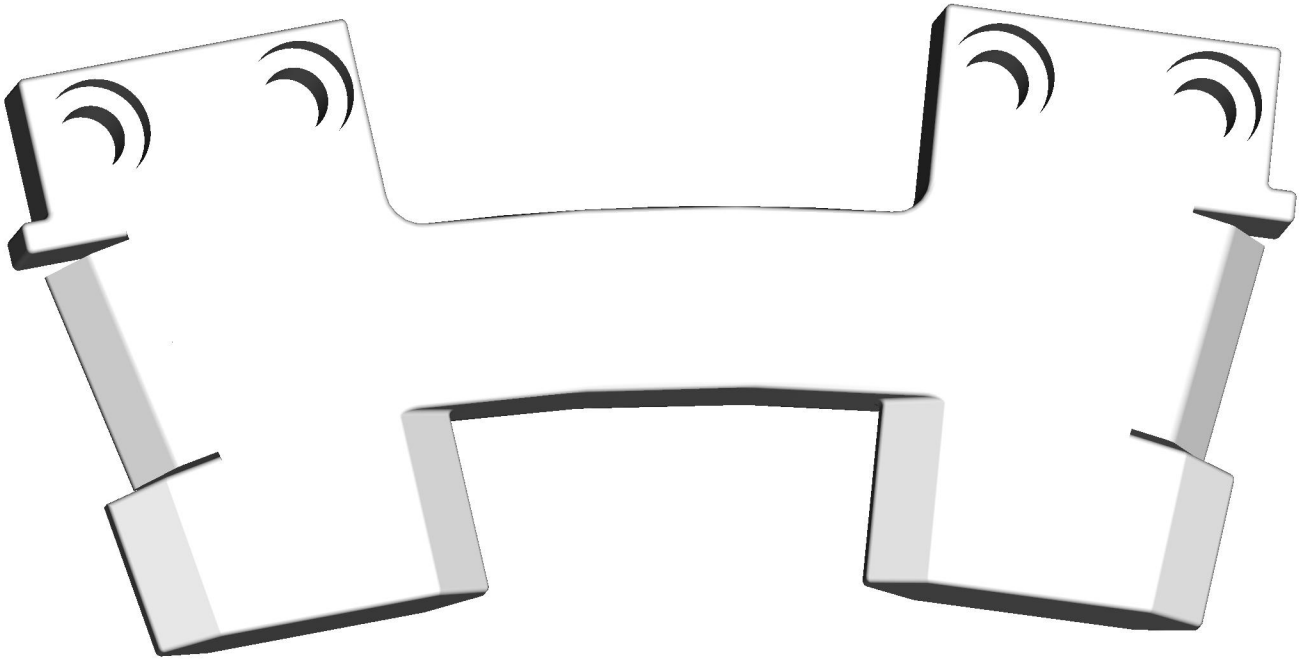

1030-1754P CONTACT, DUAL STATIONARY

For interactive 3D PDF, click the download button

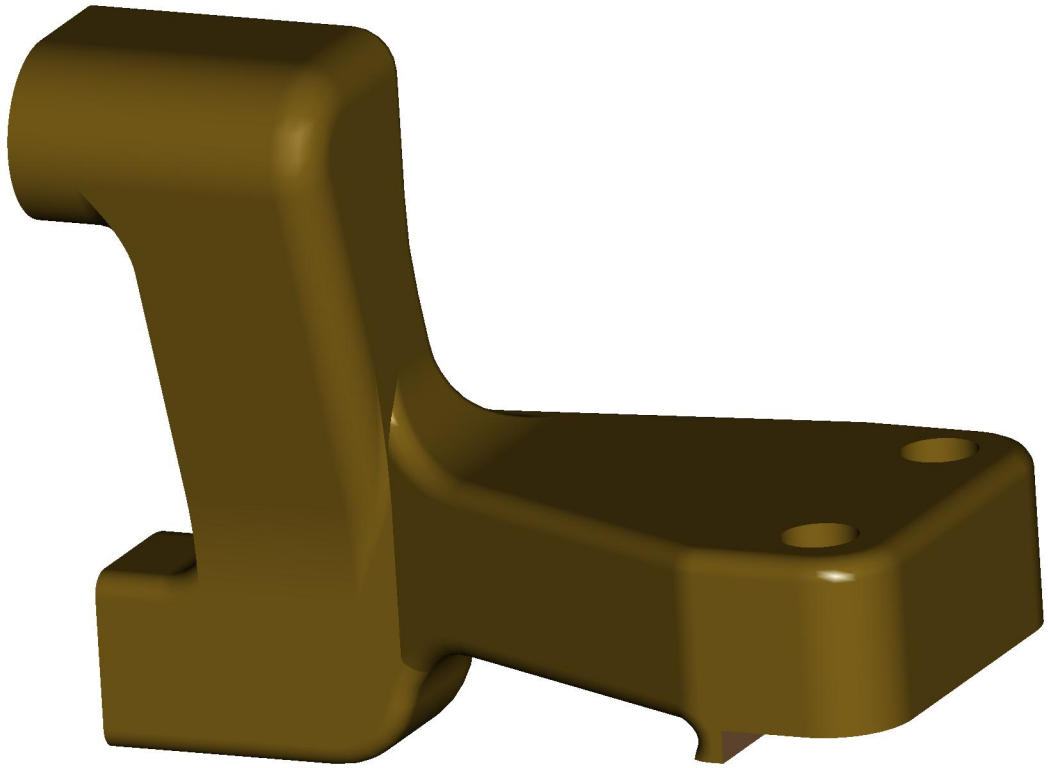

1030-1201 ARM LOWER

For interactive 3D PDF, click the download button

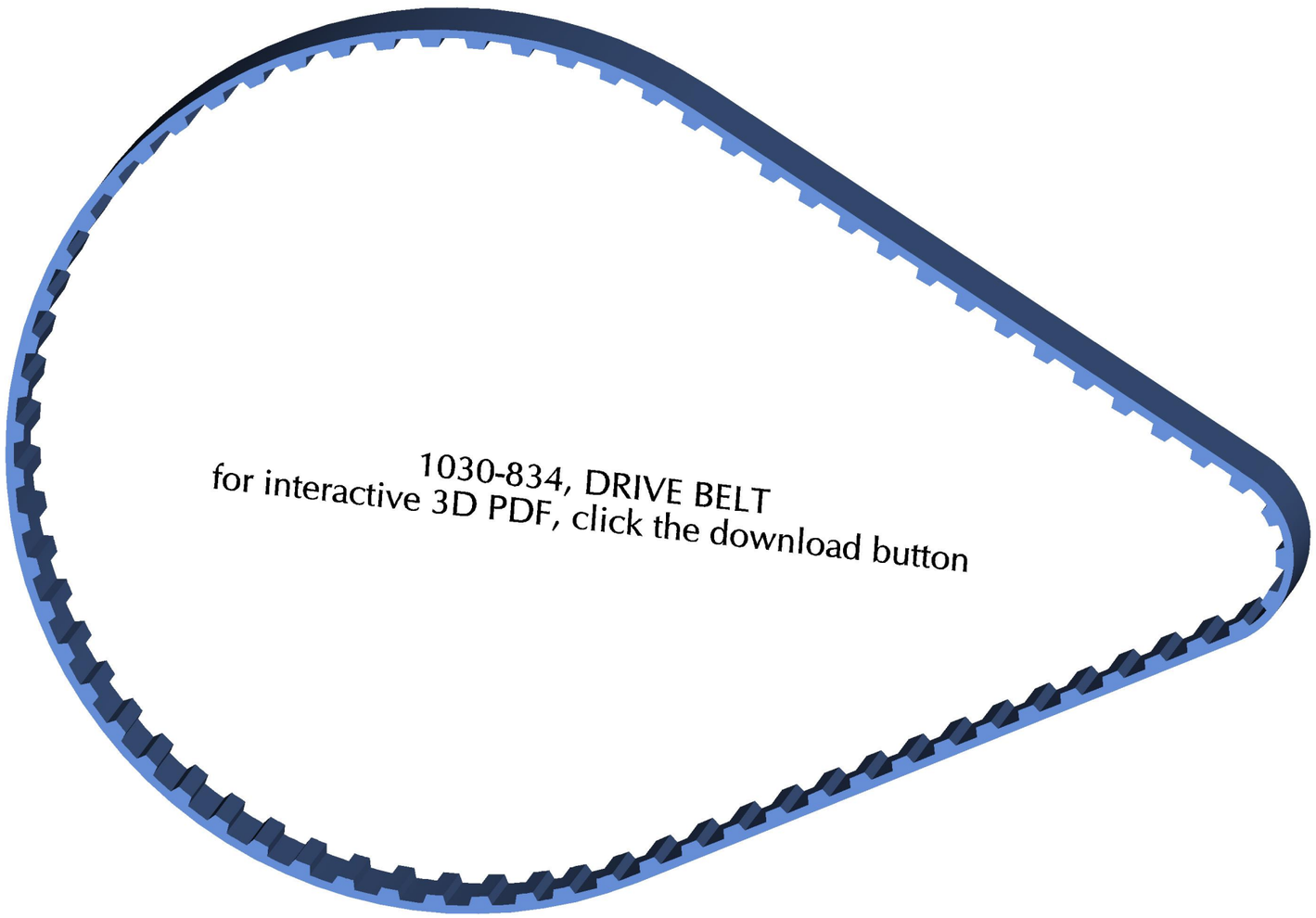
1030-834, DRIVE BELT
for interactive 3D PDF, click the download button

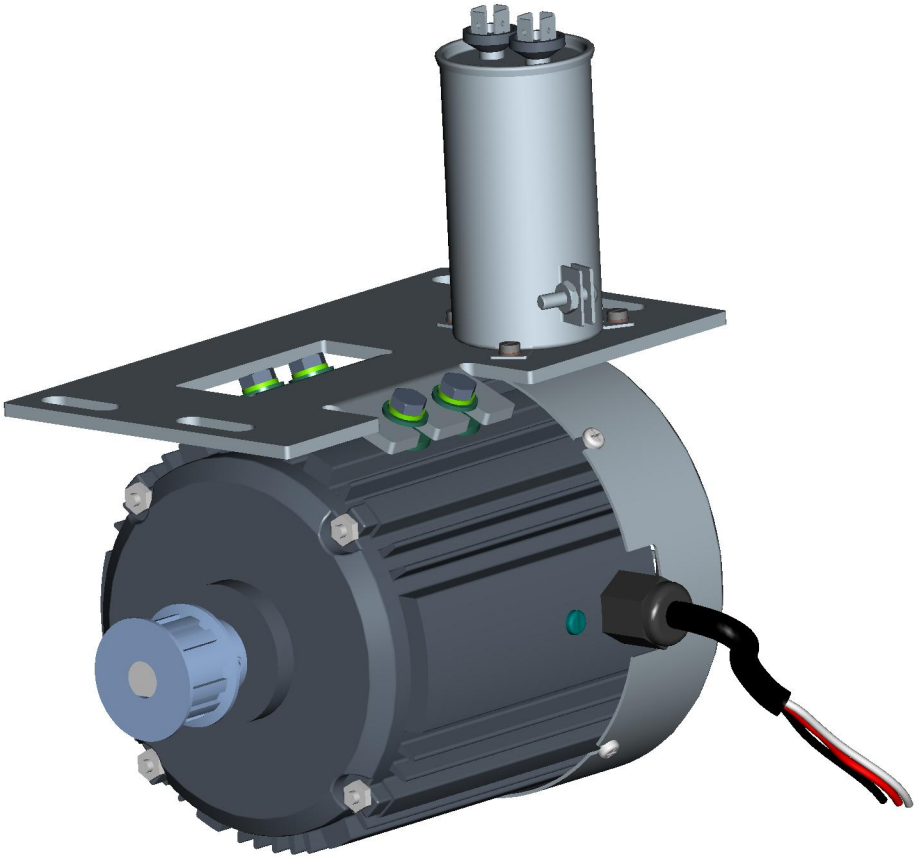

1030-718, MOTOR ASSEMBLY
for interactive 3D PDF, click the download button

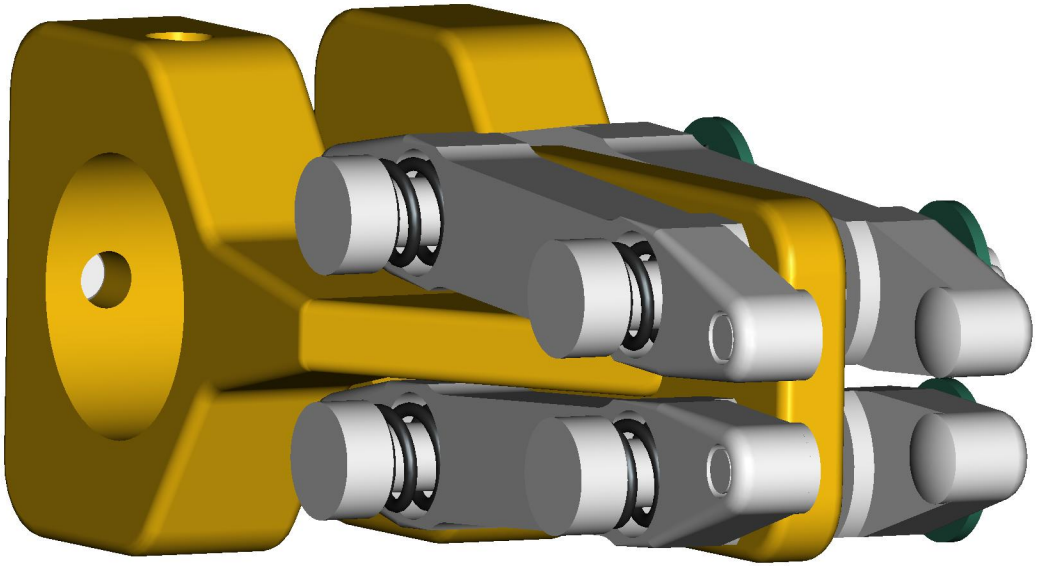

1030-054P CONTACT ASSY. MOVING, REVERSE SWITCH
for interactive 3D PDF click the download button

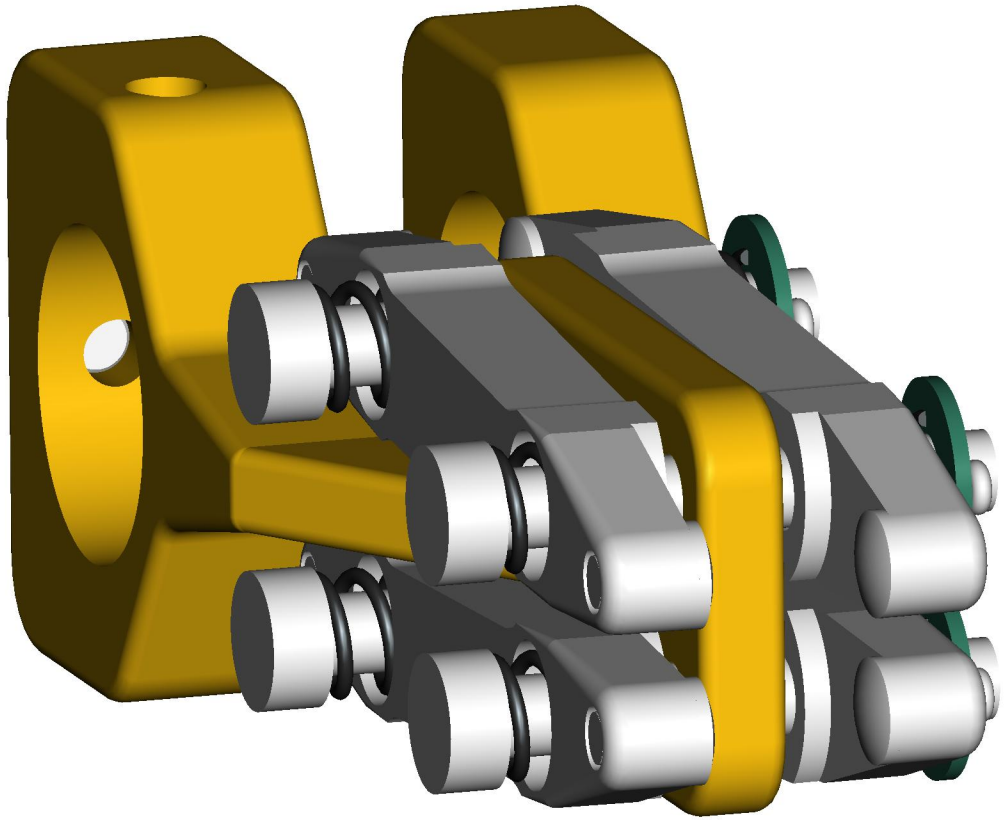

1030-054E CONTACT ASSY. MOVING, REVERSE SWITCH

for interactive 3D PDF click the download button

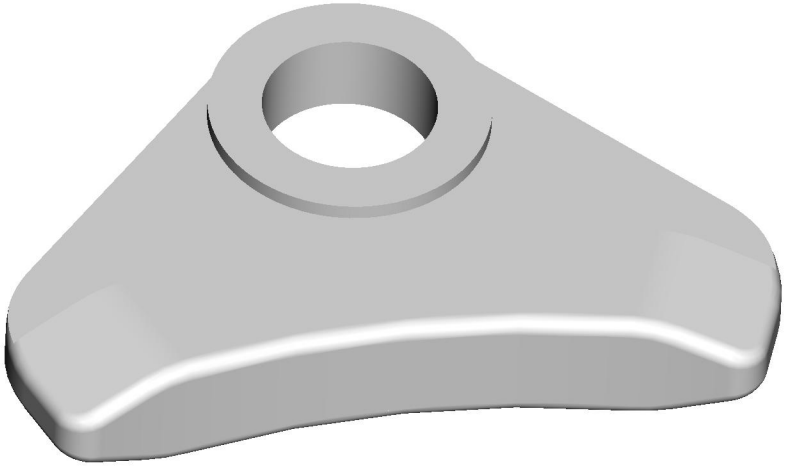

1030-059P CONTACT STATIONARY SELECTOR SWITCH
for interactive 3D PDF click the download button

1030-060P COLLECTOR RING
for interactive 3D PDF click the download button

1030-059E CONTACT ASSY. STATIONARY SEL. SWITCH
for interactive 3D PDF click the dowload button

1030-060E COLLECTOR RING
for interactive 3D PDF click the download button

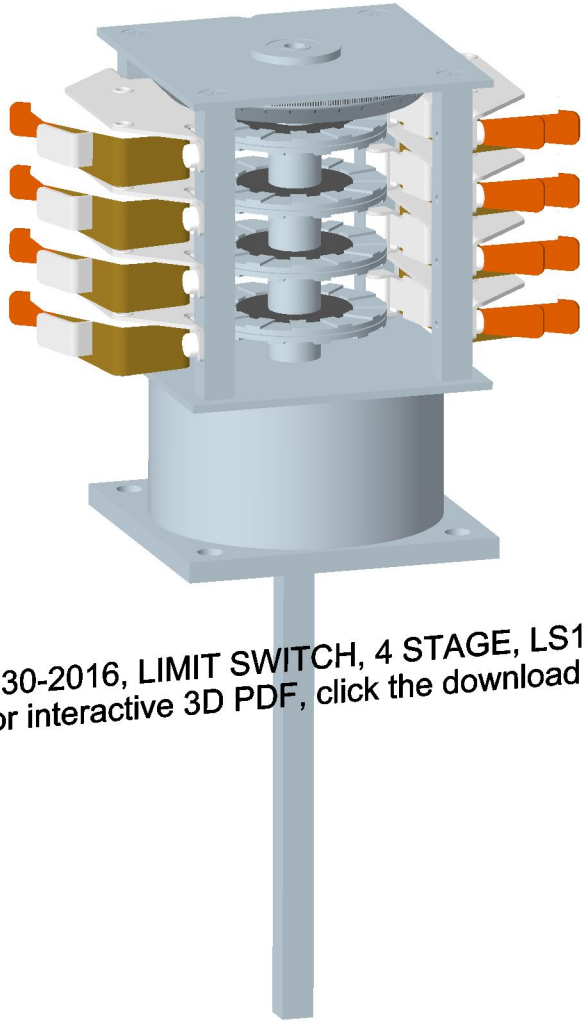

1030-2016, LIMIT SWITCH, 4 STAGE, LS1 & LS2
For interactive 3D PDF, click the download button

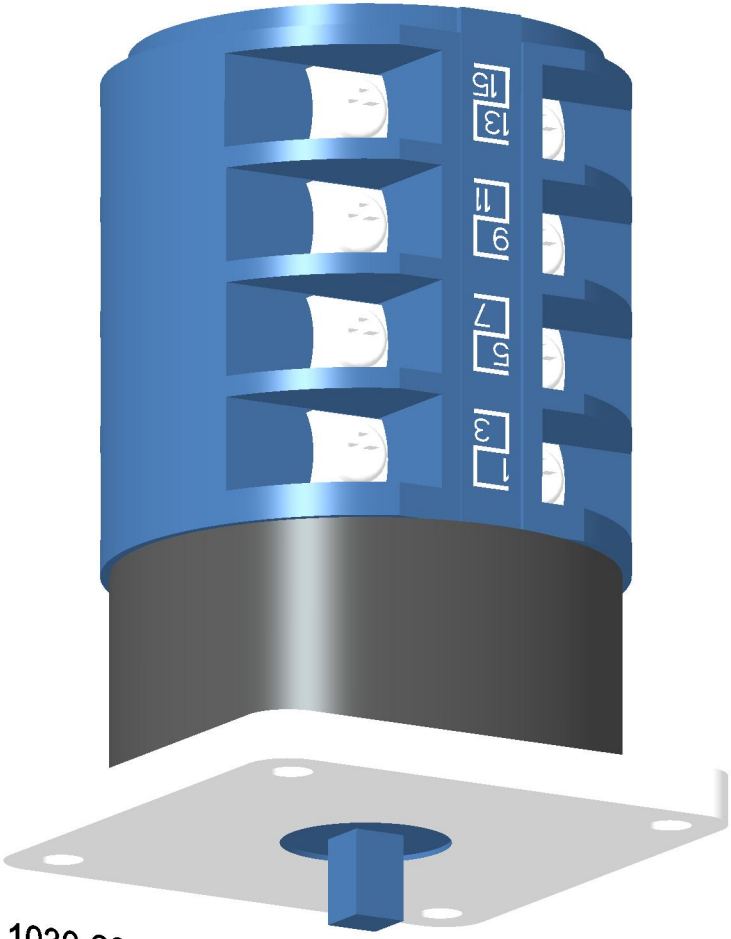

1030-2017, MAINTAINING CONTACT, 33
For interactive 3D PDF, click the download button

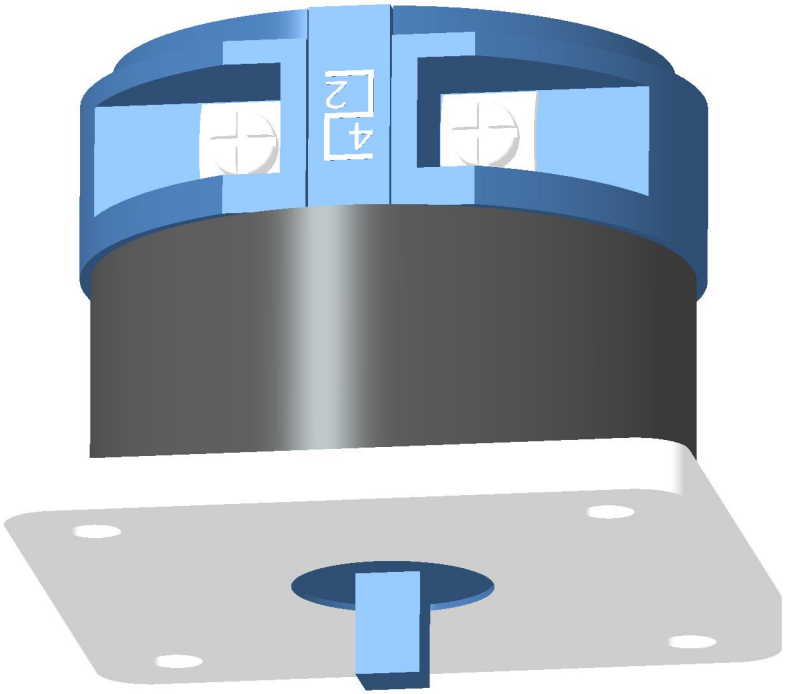

1030-2018, START CONTACTOR, 33S
For interactive 3D PDF, click the download button

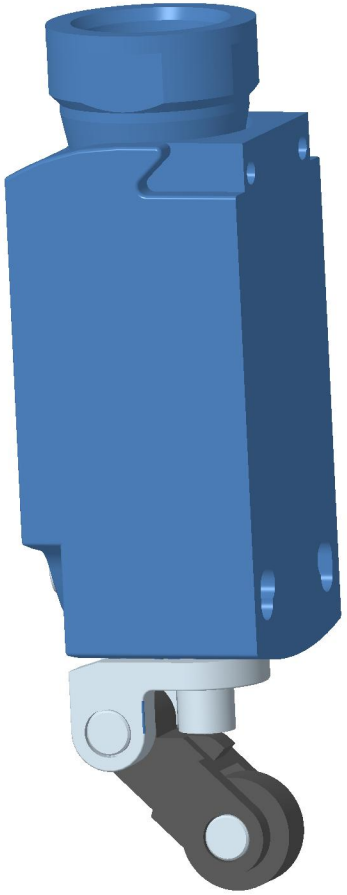

1030-2021, HAND CRANK, 84H INTERLOCK SWITCH
For interactive 3D PDF, click the download button

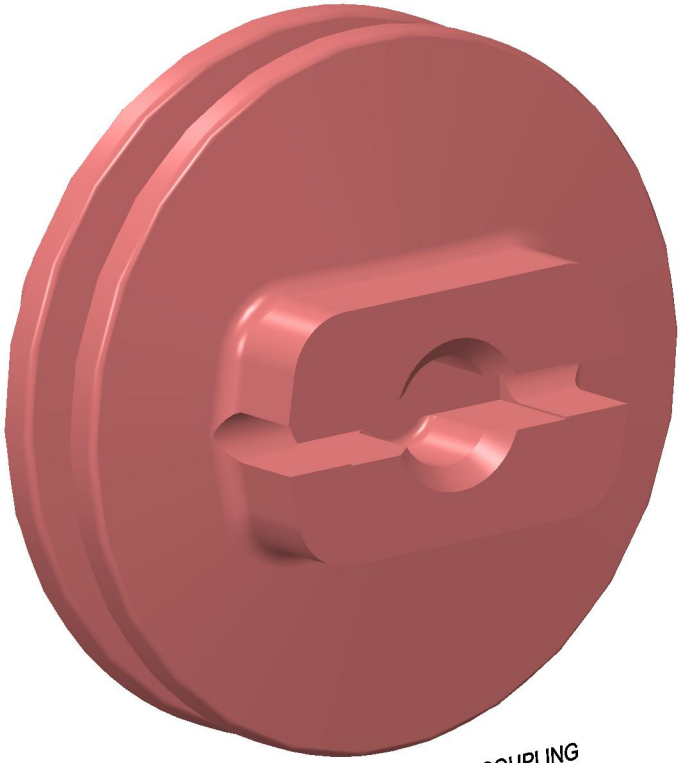

1030-2115, INSULATING DRIVE COUPLING
For interactive 3D PDF, click the download button

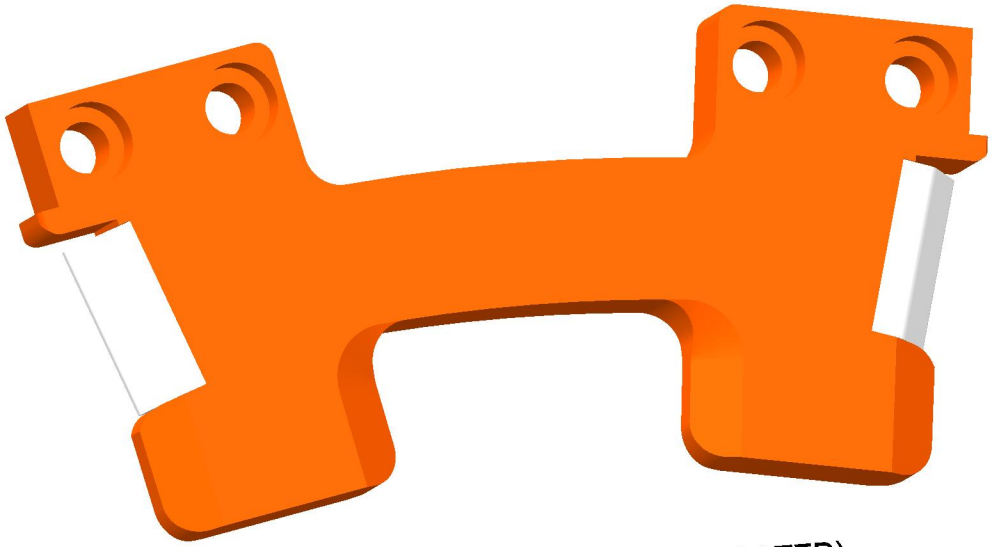

1030-1754, CONTACT LTC-UZD (UNPLATED)
For interactive 3D PDF, click the download button

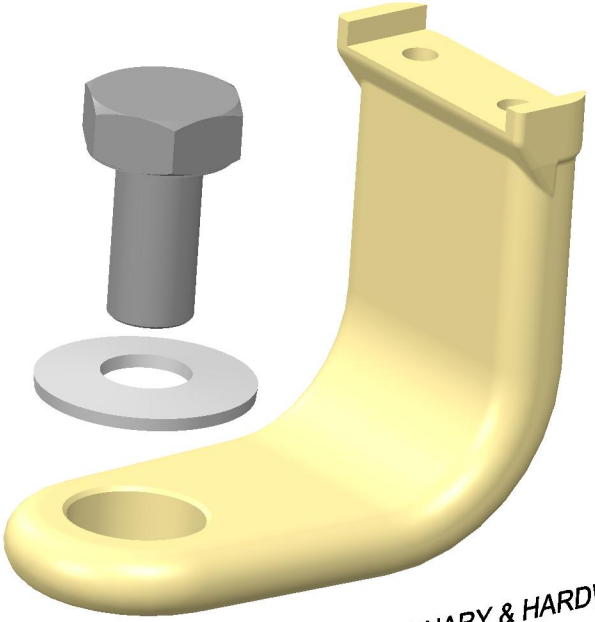

1030-2114K, CONTACT HOLDER STATIONARY & HARDWARE
For interactive 3D PDF, click the download button

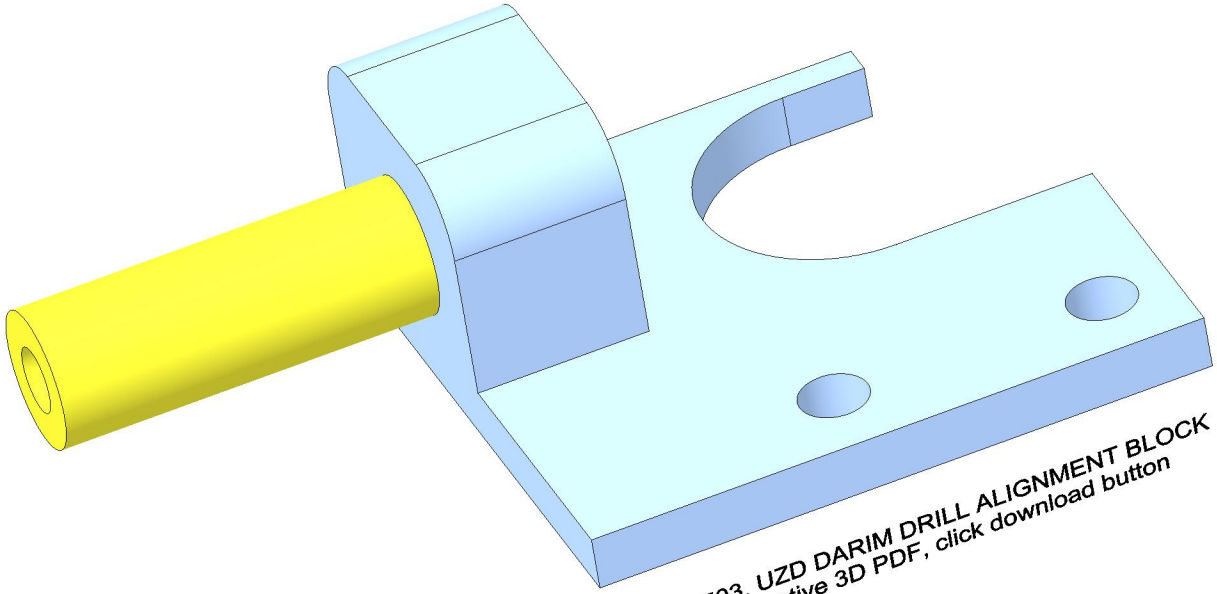

1030-1503, UZD DARIM DRILL ALIGNMENT BLOCK
For interactive 3D PDF, click download button